START

US

OFFICIAL GAZETTE

UNITED STATES

PATENT OFFICE

VOL NO 1012

NOVEMBER

1981

MICRO PHOTO DIVISION

BELL & HOWELL

B H

Vol. 1012 Number 1

OFFICIAL GAZETTE

of the

UNITED STATES PATENT AND TRADEMARK OFFICE

PATENTS

November 3, 1981

PUBLISHED WEEKLY BY AUTHORITY OF CONGRESS

U.S. DEPARTMENT OF COMMERCE

Patent and Trademark Office

OFFICIAL GAZETTE of the UNITED STATES PATENT and TRADEMARK OFFICE

November 3, 1981 Volume 1012 Number 1

CONTENTS

The following are mailed under direction of the Superintendent of Documents, Government Printing Office, Washington, D.C., 20402, to whom all subscriptions should be made payable and all communications addressed:

THE OFFICIAL GAZETTE (PATENT SECTION), issued weekly, subscription $325.00 per annum for first-class mailing, also available as fourth-class mail at $225.00 domestic; $281.25 foreign; foreign first-class mailing rates will be furnished upon request; single copies each, $5.50 domestic, $6.90 foreign.

THE OFFICIAL GAZETTE (TRADEMARK SECTION), issued weekly, subscription $105.00 per annum, foreign mailing $131.25 per annum; single copies $2.75 each domestic, $3.45 foreign.

GENERAL INFORMATION concerning PATENTS, price $2.25 each.

GENERAL INFORMATION concerning TRADEMARKS, price $1.70 each.

PRINTED COPIES OF PATENTS are furnished by the Patent and Trademark Office at 50 cents each; PLANT PATENTS in color, $1.00 each; copies of TRADEMARKS AND DESIGN PATENTS at 20 cents each. Address orders to the Commissioner of Patents and Trademarks, Washington, D.C., 20231.

Printing authorized by Section 11(a)3 of Title 35, U.S. Code P.T.O.

PATENT AND TRADEMARK OFFICE NOTICES

Patent Cooperation Treaty Information

For information concerning the PCT, consult Chapter 1800 of the Manual of Patent Examining Procedure and notices 90–95 in the consolidated listing of notices appearing in the Official Gazette of Jan. 6, 1981.

The PCT fees in effect after May 19, 1981 are as follows:

Transmittal fee	$ 35.00
Search fee	300.00
International Basic Fee (for the first 30 sheets of an international application)	215.00
Basic Supplemental Fee (for each sheet over 30)	4.00
International Designation Fee (for each State for which a national patent is sought, or group of States for which the same regional patent is sought)	50.00

RENE D. TEGTMEYER,
Assistant Commissioner for Patents.

Board of Appeals Decisions Rendered in the Month of Sept. 1981

Affirmed	192
Affirmed in Part	23
Reversed	75
Total	290

REISSUE APPLICATIONS FILED

Notice under 37 CFR 1.11(b). The reissue applications listed below are open to inspection by the general public in the indicated Examining Groups and copies may be obtained by paying the fee therefor (37 CFR 1.21(b)).

3,698,421, Re. S.N. 276,607, Filed June 23, 1981, Cl. 137/356, VALVE ASSEMBLY, Samuel D. Kersten, Jr., et al., Owner of Record: *Water Saver Faucet Co., Chicago, Ill.,* Attorney or Agent: Sidney Wallenstein, et al., Ex. Gp.: 341

3,713,258, Re. S.N. 282,817, Filed July 13, 1981, Cl. 52/90, BUILDING STRUCTURE, Einar Svensson, Owner of Record: *Inventor,* Attorney or Agent: John O. Graybeal, et al., Ex. Gp.: 354

3,823,522, Re. S.N. 277,385, Filed June 25, 1981, Cl. 52/641, HINGED CONNECTOR PLATE, John C. Jureit, et al., Owner of Record: *Automated Building Components, Inc., Miami, Fla.,* Attorney or Agent: Gary M. Hoffman, Ex. Gp.: 354

3,906,118, Re. S.N. 277,082, Filed June 25, 1981, Cl. 426/473, PROCESS FOR DE-BONING MEAT OR FISH, Archie Rae McFarland, Owner of Record: *Beehive Machinery, Inc., Salt Lake City, Utah,* Attorney or Agent: Phillip A. Nakkubcjridtm, et al., Ex. Gp.: 172

4,009,126, Re. S.N. 277,084, Filed June 25, 1981, Cl. 252/473, CATALYST FOR REMOVING ACETYLENIC IMPURITIES, Cecil G. McFarland, Owner of Record: *Petro-Tex Chemical Corp., Houston, Tex.,* Attorney or Agent: Kenneth H. Johnson, Ex. Gp.: 223

4,014,758, Re. S.N. 277,613, Filed June 24, 1981, Cl. 204/28, CONTINUOUS ELECTROLYTICAL TREATMENT OF ALUMINUM OR ITS ALLOYS, Satoshi Kawai, et al., Owner of Record: *Pilot Man-Nen-Hitsu Kabushiki Kaisha and Toyo Giken (A.K.A.) The Pilot Pen Co., Ltd., Tokyo, Japan,* Attorney or Agent: John E. Lind, et al., Ex. Gp.: 116

4,027,335, Re. S.N. 282,846, Filed July 13, 1981, Cl. 360/40, DC FREE ENCODING FOR DATA TRANSMISSION SYSTEM, Jerry Wayne Miller, Owner of Record: *Ampex Corp., Redwood City, Calif.,* Attorney or Agent: Joel C. Talcott, Ex. Gp.: 235

4,157,723, Re. S.N. 271,907, Filed June 9, 1981, Cl. 141/1, METHOD OF FORMING A CONNECTION BETWEEN TWO SEALED CONDUITS USING RADIANT ENERGY, Daniel B. Granzow, et al., Owner of Record: *Baxter Travenol Laboratories, Inc., Deerfield, Ill.,* Attorney or Agent: Paul C. Flattery, et al., Ex. Gp.: 243

4,159,370, Re. S.N. 277,391, Filed June 25, 1981, Cl. 526/73, POLYTETRAFLUOROETHYLENE FINE POWDER AND PROCESS FOR PRODUCING THE SAME, Shun Koizumi, et al., Owner of Record: *Daikin Kogyo Co., Ltd., Osaka-Shi, Japan,* Attorney or Agent: Raymond C. Stewart, et al., Ex. Gp.: 144

4,172,486, Re. S.N. 273,691, Filed June 15, 1981, Cl. 152/185.1 APPARATUS FOR CLEANING A TRACK ASSEMBLY, Robert N. Stedman, et al., Owner of Record: *Caterpillar Tractor Co., Peoria, Ill.,* Attorney or Agent: Frank L. Hart, et al., Ex. Gp.: 161

4,184,252, Re. S.N. 278,260, Filed June 29, 1981, Cl. 433/172, OVERDENTURE AND METHOD FOR SECURING SAME, Arthur J. Krol, et al., Owner of Record: *Arthur J. Krol, San Francisco, Calif.,* Attorney or Agent: Arthur J. Krol, et al., Ex. Gp.: 333

4,190,859, Re. S.N. 283,047, Filed July 13, 1981, Cl. 358/128.5, TRACKING CONTROL APPARATUS FOR USE IN APPARATUS FOR REPRODUCING VIDEO SIGNALS FROM A ROTARY RECORDING MEDIUM, Hisao Kinjo, Owner of Record: *Victor Co., of Japan, Ltd., Yokohama-City, Japan,* Attorney or Agent: Louis Bernat, Ex. Gp.: 235

4,227,849, Re. S.N. 272,271, Filed June 10, 1981, Cl. 414/408, A REFUSE COLLECTION DEVICE, Wayne H. Worthington, (Deceased), by Stanley W. Worthington, Executor, Owner of Record: *Inventor,* Attorney or Agent: H. Robert Henderson, et al., Ex. Gp.: 314

4,253,356, Re. S.N. 284,382, Filed July 17, 1981, Cl. 81/177.005, SOCKET WRENCH WITH INTERCHANGEABLE SOCKETS STORED IN HANDLE, Werner W. Martinmaas, Owner of Record: *Inventor,* Attorney or Agent: Ernest A. Wegner, et al., Ex. Gp.: 323

4,261,344, Re. S.N. 282,087, Filed July 10, 1981, Cl. 128/6, COLOR ENDOSCOPE, William C. Moore, et al., Attorney or Agent: Welch Allyn, Inc., Skaneateles Falls, N.Y., Attorney or Agent: Richard von K. Bruns, et al., Ex. Gp.: 335

REQUESTS FOR REEXAMINATION FILED

Notice under 37 CFR 1.11(c). The requests for reexamination listed below are open to inspection by the general public in the indicated Examining Groups. Copies of the requests and related papers may be obtained by paying the fee therefor established in the Rules (37 CFR 1.21(b)).

In the event correspondence to the patent owner is not received, this notice will be considered to be constructive notice to the patent owner and reexamination will proceed (37 CFR 1.248(a)(5) and 1.525(b).

Re. 27,330, Reexam. No. 90/000,080, Requested: Oct. 5, 1981, Cl. 220/437, THERMALLY INSULATED TANK STRUCTURE, Emil G. Marcmann, Owner of Record: *Theracon Industries, Inc., Cherry Hill, N.J.,* Attorney or Agent: CYR & DuPont, Ex. Gp.: 240, Requester: TPCO, Inc., Monmouth Junction, N.J.

3,472,011, Reexam. No. 90/000,069, Requested: Sept. 9, 1981, Cl. 57/290, TREATMENT OF ARTIFICIAL YARNS AND THREADS, Ernest P. R. Scragg, Owner of Record: *Lex Tex Ltd., Inc.,* Attorney or Agent: Oblon, Fisher, Spivak, McClelland & Maier, Ex. Gp.: 244, Requester: Glen Raven Mills, Inc., et al., c/o Cushman, Darby & Cushman, Washington, D.C.

3,502,645, Reexam. No. 90/000,078, Requested: Sept. 30, 1981, Cl. 260/158, WATER-INSOLUBLE BENZOTHIAZOLE MONOAZO DYES, Duncan G. Carmichael, Owner of Record: *Martin Marietta Corp.,* Attorney or Agent: Wilton Rankin, Ex. Gp.: 110, Requester: George E. Oram, Washington, D.C.

3,651,418, Reexam. No. 90/000,079, Requested: Oct. 2, 1981, Cl. 329/50, SYNCHRONOUS DETECTOR CONTROL, Erwin Johann Wittmann, Owner of Record: *RCA Corp.,* Attorney or Agent: Eugene M. Whitacre, Ex. Gp.: 252, Requester: RCA Corp., Princeton, N.J.

4,110,240, Reexam. No. 90/000,075, Requested: Sept. 25, 1981, Cl. 252/182, COPRECIPITATION PROCESS, Thomas J. Leo, et al., Owner of Record: *Wyrough & Loser, Inc., Trenton, N.J.,* Attorney or Agent: James R. Laramie, Ex. Gp.: 220, Requester: Harold C. Wegner, Washington, D.C.

4,182,460, Reexam. No. 90/000,076, Requested: Sept. 28, 1981, Cl. 220/271, LEVER ACTION TAB SYSTEM FOR EASY OPENING ENDS, A. J. Holk, et al., Owner of Record: *The Continental Group, Inc., New York, N.Y.,* Attorney or Agent: Charles E. Brown, Ex. Gp.: 240, Requester: Boise Cascade Corp., c/o L. E. Laubscher, Sr., Arlington, Va.

DEPARTMENT OF COMMERCE

Patent and Trademark Office

37 CFR Part 2

Trademark Applications; Filing Dates

AGENCY: Patent and Trademark Office, Commerce.

ACTION: Proposed rulemaking.

SUMMARY: Patent and Trademark Office proposes amendments of the rules of practice in trademark cases to revise the filing date requirements for an application for registration of a mark and to allow the Office to return applications which fail to meet these requirements. The amendments also define with additional specificity the nature of the drawing and specimens which must accompany an application in order for it to be entitled to a filing date. The proposed amendments are needed to reduce the special handling required to process and control applications not entitled to a filing date and the impact of such special handling on delaying other applications. Delays in application processing also occur when drawings fail to include a complete heading and Office personnel must enter the necessary data on a large volume of drawings. The proposed amendments are designed to speed the initial processing of applications and the filing of copies of drawings in the Trademark Search Room. An additional effect of the amendments would be a significantly earlier notification to an applicant of the status of papers filed as an application for registration of a trademark.

DATE: Written comments by January 5, 1982.

ADDRESSES: Address written comments to the Commissioner of Patents and Trademarks, Washington, D.C. 20231. Written comments will be available for public inspection in Room 11E10 of Building 3, Crystal Plaza, 2021 Jefferson Davis Highway, Arlington, Virginia.

FOR FURTHER INFORMATION CONTACT: Ms. Paula Hairston by telephone at [703]557-7464 or by mail marked to her attention and addressed to the Commissioner of Patents and Trademarks, Washington, D.C. 20231.

SUPPLEMENTARY INFORMATION: The Patent and Trademark Office is considering amendments to the rules of practice in trademark cases to amend the requirements for receiving a filing date for an application for registration of a mark, to revise the procedures for returning papers which are not entitled to receive a filing date, to amend the requirements for a drawing submitted as part of an application, to delete the provisions for the Patent and Trademark Office to make or correct drawings for applications to register marks and to specify that a copy of a drawing is not acceptable as a facsimile showing how a mark is actually used in commerce.

The specific rules for which amendments are proposed are §§2.21, 2.52, 2.54, and 2.57. In addition, it is proposed to remove §2.55.

Section 2.21 is proposed to be amended by revising paragraphs (a) and (c). The effect of revising paragraph (a) will be to make the heading a mandatory portion of the drawing of the mark. The result will be the denial of a filing date for an application when the drawing submitted as apart of the application lacks the information required to be in the heading, namely, the applicant's full name and postal address, the date of first use of the mark, the date of first use of the mark in commerce (except for an application filed under §44 of the Trademark Act), and the goods or services identified in the application, or a typical item of goods or services if a number of items are recited in the application. At present, if a drawing is submitted without a heading, or with an incomplete heading, an employee of the Service Division of the Trademark Examining Operation must type the information on the drawing before copies can be reproduced for filing in the Search Room for use by examiners and the general public. Because the applications are batched in numerical order for processing purposes, this added typing delays the processing, not only of the application directly involved, but also of all the applications with later serial numbers. Consequently, the submission of drawings with missing or incomplete headings affects other applicants and contributes to unnecessary delays in sending out filing receipts and in transmitting applications to the examiners.

It is also proposed to remove the words "or other identification" from existing paragraph (a) because they have no meaning.

Paragraph (c) of §2.21 is proposed to be amended to change the procedure for dealing with applications that are so defective, i.e. that do not satisfy the requirements of §2.21(a), that they are not entitled to a filing date.

The procedure within the Patent and Trademark Office under existing §2.21(c) is that all incoming mail is date-stamped in the mail room. All papers submitted as applications for the registration of marks are given serial numbers and are then sent to the Finance Branch for the collection of the fees submitted. After the papers are annotated to show the fee submitted, the papers are returned to the mail room, which sends them to the Classification Team of Trademark Service Division for review. If any application fails to satisfy the requirements of §2.21(a), the applicant or his attorney is notified of the defect and allowed six months to correct it. In the meantime, the papers and fee are held in the Office. The time that elapses between the receipt of application papers in the Office and the dispatch of a letter notifying the applicant or his attorney that the application is not entitled to receive a filing date is approximately three to four weeks and occasionally longer.

If the defect is remedied within the six months allowed, the application is given an effective filing date as of the date when all of the requirements of §2.21(a) are fulfilled. If the requirements for receiving a filing date are not satisfied, the fee, the drawing, and the re-

maining application papers are normally returned. Application papers which, when originally filed, are not entitled to receive a filing date impose extra handling burdens and costs upon the Patent and Trademark Office.

Under the proposed procedure, papers submitted as an application for registration of a mark will be reviewed immediately after their receipt in the mail room of the Patent and Trademark Office. Papers which are so defective that they are not entitled to receive a filing date will be returned to the applicant or his attorney together with any fee that was submitted. The papers will be accompanied by a letter describing the defect or defects. The applicant or his attorney will thus be notified that an application is not entitled to a filing date within about ten days from the date when the defective papers were received. This change will be beneficial to such applicants because they will be notified of, and hence have the opportunity to correct, defects in applications at an earlier time than is possible under existing §2.21(c), and, therefore, obtain an earlier effective filing date, than is now possible. The change will also benefit other applicants by reducing the burden and costs of the Patent and Trademark Office which adversely affect the handling of their applications.

In the event that the applicant resubmits the original application papers together with any additional paper, specimen, drawing, or fee which is required to correct the defect in the original papers, the Patent and Trademark Office will exercise reasonable discretion in determining whether the lapse of time between the date of execution of the application and the receipt in the Office of the corrected papers requires reexecution of the application. A requirement by the examiner that the application be reexecuted will not affect the filing date. See §2.32(b).

It should be noted that the certificate of mailing procedure, 37 CFR 1.8, does not apply to the filing of trademark applications and therefore does not apply to the filing of a resubmitted trademark application. This is not a change from current practice.

Section 2.52 is proposed to be amended by revising paragraph (d) to make it mandatory to include on every drawing submitted as part of an application the identifying information prescribed by the rule. Specifically, "must" is substituted for "should" in the present rule. The reason for this proposed amendment is explained above in the explanation of the amendment proposed for §2.21(a).

Section 2.54 is proposed to be amended to bring this section into conformity with the proposed amendments of §§2.21(a) and 2.52 by excluding an omitted or incomplete heading as a defect which is remediable by amendment after an examiner issues an Office action. Section 2.54 is also proposed to be amended by eliminating the provision for correction of drawings by the Office. The provision is being eliminated because of the lack of facilities.

Section 2.55 is proposed to be removed because the official draftsman of the Office does not have the facilities for making drawings for applications to register marks.

Section 2.57 is proposed to be amended by adding new paragraph (b) to make it clear that a mere reproduction of the drawing by xerographic, photographic or other copying processes will not be accepted as a facsimile showing how the mark is actually used in commerce (or is actually used in the case of an application filed under section 44 of the Trademark Act). No change is being made in the requirement that a facsimile submitted in lieu of a specimen must clearly and legibly show the mark and all matter used in connection therewith as the mark is actually used.

The Patent and Trademark Office has determined that the proposed—amendments are not major rules under Executive Order 12291 since they would benefit trademark applicants and reduce the burdens on the Office.

The proposed amendments will not have a significant adverse economic impact on a substantial number of small entities. (Regulatory Flexibility Act, 5 U.S.C. 601 *et seq.*)

Notice is hereby given that pursuant to the Commissioner's authority under Section 41 of the Trademark Act of July 5, 1946, 15 U.S.C. 1123, and Section 6 of the Act of July 19, 1952, 35 U.S.C. 6, the Patent and Trademark Office proposes to amend Part 2 of Title 37 of the Code of Federal Regulations as set forth below.

In the text of the proposed amendments, additions are indicated by arrows and delections are indicated by brackets.

It is proposed to amend 37 CFR, Part 2 as follows:

PART 2—RULES OF PRACTICE IN TRADEMARK CASES

1. Section 2.21 is proposed to be revised to read as follows:

§2.21 Requirements for receiving a filing date.

(a) Materials submitted as an application for registration of a mark will not be accorded a filing date as an application until all of the following elements are received:

(1) Name of the applicant;

(2) A name and address to which communications can be directed;

(3) A drawing [or other identification] of the mark sought to be registered [;] ►containing the information required by paragraph (d) of §2.52;◄

(4) An identification of goods or services;

(5) At least one specimen or facsimile of the mark as actually used;

(6) A date of first use of the mark in commerce, or a certification or certified copy of a foreign registration if the application is based on such foreign registration pursuant to section 44(e) of the [act,] ►Trademark Act,◄ or a claim of the benefit of a prior foreign application in accordance with section 44(d) of the Act;

(7) The required filing fee for at least one class of goods or services. Compliance with one or more of the rules relating to the elements specified above may be required before the application is further processed.

(b) The filing date of the application is the date on which all of the elements set forth in paragraph (a) of this section are received in the Patent and Trademark Office.

(c) If the papers [are so defective that they cannot be accepted, the applicant will be notified and the papers and fee held 6 months. If the requirements for receiving a filing date have not been satisfied within such time, the papers and fee will be returned to the applicant or otherwise disposed of; the drawing or fee of an unaccepted ► applicant may be transferred to a later application.] and fee submitted as an application do not satisfy all of the requirements specified in paragraph 9a) of this section, the papers will not be considered to constitute an application and will not be given a filing date. The Patent and Trademark Office will return the papers and any fee submitted therewith to the person who submitted the papers. The Office will notify the person to whom the papers are returned of the defect or defects which prevented their being considered to be an application.◄

2. Section 2.52 is proposed to be amended by revising paragraph (d) to read as follows:

§2.52 Requirements for drawings.

* * * * *

(d) *Heading.* Across the top of the drawing, beginning one inch (2.5 cm.) from the top edge and not exceeding one-fourth of the sheet, there [should] ►must◄ be placed a heading, listing in separate lines applicant's ► complete◄ name, applicant's post office address, the date [s] of first use of the mark, the date of first use of► the mark in commerce (except for an application filed under section 44 of the Trademark Act),◄ and the goods or services recited in the application [(]►or◄ a typical item of the goods or services if a number►of items◄ are recited in the application [)]. This heading [may]► should◄ be typewritten.

* * * * *

3. Section 2.54 is proposed to be revised to read as follows:

§2.54 Informal drawings.

A drawing not in conformity with [§§2.51 to 2.53]► §2.51 or paragraphs (a), (b), (c), or (e) of §2.52 or §2.53 may be accepted for purposes for examination, but the drawing must be corrected or a new one furnished, as required, before the mark can be published or the application allowed. [The necessary corrections will be made by the Patent and Trademark Office upon applicant's request and at his expense.]

4. Section 2.55 is proposed to be removed.

[§2.55 Patent and Trademark Office may make drawings.

The Patent and Trademark Office, at the request of applicants and at their expense, will make drawings if facilities permit.]

5. Section 2.57 is proposed to be revised as follows:

§2.57 Facsimiles.

►(a)◄ When, due to the mode of applying or affixing the trademark to the goods, or to the manner of using the mark on the goods, or to the nature of the mark, specimens as above stated cannot be furnished, five copies of a suitable photograph or other acceptable reproduction, not to exceed 8 1/2 inches (21.6 cm.) wide and 13 inches (33.0 cm.) long, and clearly and legibly showing the mark and all matter used in connection therewith, shall be furnished.

►(b) A purported facsimile which is merely a reproduction of the drawing submitted to comply with §2.51 will not be considered to be a facsimile depicting the mark as actually used on or in connection with the goods or in connection with the services.

Dated: August 27, 1981.
Gerald J. Mossinghoff,
Commissioner of Patents and Trademarks.

Approved: September 2, 1981.
Robert B. Ellert,
Acting Assistant Secretary for Productivity, Technology and Innovation.

[FR Doc. 81-39154 Filed 10-7-81; 8:45 a.m]
BILLING CODE 3560-31-M

PATENT NOTICES

Certificates of Correction for the Week of Nov. 3, 1981,

D. 258,109	4,239,059	4,265,719	4,280,821
D. 259,089	4,239,060	4,265,723	4,281,008
D. 259,090	4,239,507	4,265,788	4,281,028
D. 259,512	4,241,405	4,265,824	4,281,396
3,800,239	4,242,621	4,266,065	4,281,419
4,031,304	4,245,031	4,266,611	4,281,655
4,047,029	4,245,281	4,266,752	4,281,707
4,068,298	4,245,332	4,266,964	4,281,715
4,073,784	4,245,870	4,267,447	4,281,730
4,075,221	4,246,895	4,269,497	4,282,179
4,107,196	4,247,494	4,269,722	4,282,441
4,107,387	4,247,862	4,269,761	4,282,644
4,132,915	4,247,903	4,270,126	4,282,930
4,137,876	4,248,857	4,270,729	4,283,200
4,140,850	4,251,159	4,271,042	4,283,290
4,145,351	4,251,269	4,271,074	4,283,350
4,149,178	4,251,687	4,271,294	4,283,355
4,168,886	4,253,232	4,271,430	4,283,691
4,174,830	4,253,303	4,271,506	4,283,955
4,175,158	4,254,044	4,273,600	4,284,371
4,179,211	4,254,506	4,274,604	4,284,561
4,192,217	4,254,668	4,274,718	4,284,640
4,196,134	4,255,210	4,274,832	4,284,661
4,197,444	4,255,711	4,275,106	4,284,701
4,200,252	4,256,402	4,275,644	4,284,733
4,202,781	4,256,844	4,275,768	4,284,941
4,205,894	4,257,096	4,276,234	4,285,187
4,210,147	4,257,400	4,276,394	4,285,248
4,213,681	4,257,833	4,276,407	4,285,639
4,216,035	4,257,863	4,276,436	4,285,689
4,219,455	4,259,007	4,277,315	4,285,846
4,219,613	4,259,450	4,277,745	4,285,945
4,220,700	4,259,565	4,277,917	4,286,255
4,221,988	4,259,937	4,277,967	4,286,411
4,223,077	4,260,496	4,278,431	4,286,422
4,225,660	4,262,004	4,278,434	4,286,431
4,226,271	4,262,114	4,278,445	4,286,840
4,226,824	4,262,208	4,278,758	4,287,074
4,226,856	4,262,314	4,279,423	4,287,740
4,227,599	4,262,683	4,279,478	4,288,066
4,230,112	4,262,830	4,279,563	4,288,314
4,231,852	4,263,409	4,279,800	4,289,309
4,231,871	4,264,129	4,279,881	4,289,426
4,234,549	4,264,319	4,279,993	4,289,941
4,237,216	4,264,520	4,280,267	
4,237,788	4,265,235	4,280,390	
4,238,753	4,265,596	4,280,617	

Adverse Decisions in Interference

In the designated interference involving the indicated claims of the following patents, final decisions having been rendered that the respective patentees were not the first inventors with respect to the claims listed.

Patent No. 3,696,276, B. W. Boland, INSULATED GATE FIELD-EFFECT DEVICE AND METHOD OF FABRICATION, Interference No. 99,779, decided June 17, 1981, claims 1, 2, 4 and 6.

Patent No. 3,832,243, H. C. Donkersloot and J. H. N. van Vucht, SHAPE MEMORY ELEMENTS, Interference No. 100,281, decided Aug. 13, 1981, claims 1–3 and 5.

Patent No. 4,024,083, M. S. Kablaoui and J. B. Biasotti, SUBSTITUTED PHENOXY PROPANOL DIAMINES AND AMINO ALCOHOL DETERGENT ADDITIVES FOR FUELS AND MINERAL OILS, Interference No. 100,430, decided Sept. 16, 1981, claims 1, 3, 4, 7 and 8.

Patent No. 4,024,245, M. M. Hoehn and K. H. Michel, ANTIBIOTIC A-30912 AND PROCESS FOR PRODUCTION THEREOF, Interference No. 100,071, decided July 20, 1981, claims 1 and 2.

Patent No. 4,029,150, E. M. Goodsell, Jr., SPRINKLER, Interference No. 99,811, decided Oct. 8, 1980, claims 1, 2, 4–7.

Patent No. 4,073,094, R. A. Walz, METHOD AND APPARATUS FOR REPAIRING A CRACK IN A PANE OF PLATE GLASS, Interference No. 100,020, decided June 9, 1981, claims 1, 2, 4, 5, 6 and 8.

Patent No. 4,111,788, M. C. Chervenak and E. S. Johanson, STAGED HYDROGENATION OF LOW RANK COAL, Interference No. 100,462, decided July 20, 1981, claims 1–9, 11–15, 18 and 21.

Patent No. 4,119,343, F. R. Pentzien, PLATFORM ROCKER STRUCTURE, Interference No. 100,609, decided Aug. 31, 1981, claims 1, 2 and 3.

Patent No. 4,173,575, J. T. Carlock, POLYMER BOUND (PENTAHAPTOCYCLOPENTADIENYL) BIS CARBONYL RHODIUM HYDROFORMYLATION CATALYST, Intereference No. 100,598, decided Aug. 13, 1981, claims 1–9.

NANNIE B. HENRY,
Deputy Clerk,
Board of Patent Interferences.

Reference Collections of U.S. Patents Available for Public Use in Patent Depository Libraries

The libraries listed herein, designated as patent depository libraries, receive current issues of U.S. Patents and maintain collections of earlier issued patents. The scope of these collections varies from library to library, ranging from patents of only recent months or years in some libraries to all or most of the patents issued since 1870, or earlier, in other libraries.

These patent collections are open to public use and each of the patent depository libraries, in addition, offers the publications of the patent classification system (e.g. The Manual of Classification, Index to the U.S. Patent Classification, Classification Definitions, etc.) and provides technical staff assistance in their use to aid the public in gaining effective access to information contained in patents. With one exception, as noted in the table following, the collections are organized in patent number sequence.

Depending upon the library, the patents may be available in microfilm, in bound volumes of paper copies, or in some combination of both. Facilities for making paper copies from either microfilm in reader-printers or from the bound volumes in paper-to-paper copies are generally provided for a fee.

Owing to variations in the scope of patent collections among the patent depository libraries and in their hours of service to the public, anyone contemplating use of the patents at a particular library is advised to contact that library, in advance, about its collection and hours, so as to avert possible inconvenience.

State	*Name of Library*	*Telephone Contact*
Alabama	Birmingham Public Library	(205) 254-2555
Arizona	Tempe: Science Library, Arizona State University	(602) 965-7607
California	Los Angeles Public Library	(213) 626-7555 Ext. 273
	Sacramento: California State Library	(916) 322-4572
	Sunnyvale: Patent Information Clearinghouse*	(408) 738-5580
Colorado	Denver Public Library	(303) 573-5152 Ext. 222
Delaware	Newark: University of Delaware	(302) 738-2238
Georgia	Atlanta: Price Gilbert Memorial Library, Georgia Institute of Technology	(404) 894-4519
Illinois	Chicago Public Library	(312) 269-2814
Louisiana	Baton Rouge: Troy H. Middleton Library, Louisiana State University	(504) 388-2570
Massachusetts	Boston Public Library	(617) 536-5400 Ext. 265
Michigan	Detroit Public Library	(313) 833-1450
Minnesota	Minneapolis Public Library & Information Center	(612) 372-6552
Missouri	Kansas City: Linda Hall Library	(816) 363-4600
	St. Louis Public Library	(314) 241-2288 Ext. 214, 215
Nebraska	Lincoln: University of Nebraska-Lincoln, Engineering Library	(402) 472-3411
New Hampshire	Durham: University of New Hampshire Library	(603) 862-1777
New Jersey	Newark Public Library	(201) 733-7814
New York	Albany: New York State Library	(518) 474-5125
	Buffalo and Erie County Public Library	(716) 856-7525 Ext. 267
	New York Public Library (The Research Libraries)	(212) 790-6291
North Carolina	Raleigh: D. H. Hill Library, N.C. State University	(919) 737-3280
Ohio	Cincinnati & Hamilton County, Public Library of	(513) 369-6936
	Cleveland Public Library	(216) 623-2870
	Columbus: Ohio State University Libraries	(614) 422-6286
	Toledo/Lucas County Public Library	(419) 255-7055 Ext. 212
Oklahoma	Stillwater: Oklahoma State University Library	(405) 624-6546
Pennsylvania	Philadelphia: Franklin Institute Library	(215) 448-1321**
	Pittsburgh: Carnegie Library of Pittsburgh	(412) 622-3138
	University Park: Pattee Library, Pennsylvania State University	(814) 865-4861
Rhode Island	Providence Public Library	(401) 521-7722 Ext. 226
Tennessee	Memphis & Shelby County Public Library and Information Center	(901) 528-2957
Texas	Dallas Public Library	(214) 748-9071
	Houston: The Fondren Library, Rice University	(713) 527-8101 Ext. 2587
Washington	Seattle: Engineering Library, University of Washington	(206) 543-0740
Wisconsin	Madison: Kurt F. Wendt Engineering Library, University of Wisconsin	(608) 262-6845
	Milwaukee Public Library	(414) 278-3043

*Collection organized by subject matter.

**Call only between the hours of 10:00 a.m. and 5:00 p.m.

PATENT EXAMINING CORPS

RENE D. TEGTMEYER, Assistant Commissioner
WILLIAM FELDMAN, Deputy Assistant Commissioner

CONDITION OF PATENT APPLICATIONS AS OF September 5, 1981

PATENT EXAMINING GROUPS	Actual Filing Date of Oldest New Case Awaiting Action
CHEMICAL EXAMINING GROUPS	
GENERAL CHEMISTRY AND PETROLEUM CHEMISTRY, GROUP 110—D. E. TALBERT, Director .... Inorganic Compounds; Inorganic Compositions; Organo-Metal and Organo-Metalloid Chemistry; Metallurgy; Metallurgical Apparatus; Metal Stock; Electro Chemistry; Batteries; Hydrocarbons; Mineral Oil Technology; Lubricating Compositions; Gaseous Compositions; Fuel and Igniting Devices.	5-12-80
GENERAL ORGANIC CHEMISTRY, GROUP 120—C. E. VAN HORN, Director .... Heterocyclic Amides; Alkaloids; Azo; Sulfur; Misc. Esters; Carbohydrates; Herbicides; Poisons; Medicines; Cosmetics; Steroids; Oxo and Oxy; Quinones; Acids; Carboxylic Acid Esters; Acid Anhydrides; Acid Halides.	10-11-79
HIGH POLYMER CHEMISTRY, PLASTICS AND MOLDING, GROUP 140—J. O. THOMAS, JR., Director .... Synthetic Resins; Rubber; Proteins; Macromolecular Carbohydrates; Mixed Synthetic Resin Compositions; Synthetic Resins With Natural Polymers and Resins; Reclaiming; Pore-Forming; Compositions (Part) e.g., Coating; Molding; Ink; Prosthdontics; Adhesive and Abrading Compositions; Molding, Shaping, Treating Process, and Apparatus Therefor; Irradiation (Part); Bleaching; Dyeing; Leather, Fur and Textile Treating Compositions.	7-09-80
COATING, LAMINATING AND PHOTOGRAPHY, GROUP 160—S. N. ZAHARNA, Director .... Coating: Processes, Apparatus and Misc. Products; Laminating Methods and Apparatus; Stock Materials; Adhesive Bonding; Special Chemical Manufactures; Special Utility Compositions; and Photography.	1-12-80
SPECIALIZED CHEMICAL INDUSTRIES AND CHEMICAL ENGINEERING, GROUP 170— R. F. WHITE, Director .... Fertilizers; Foods; Fermentation; Analytical Chemistry; Reactors; Sugar and Starch; Paper Making; Glass Manufacture; Gas; Heating and Illuminating; Cleaning Processes; Liquid Purification; Distillation; Preserving; Liquid, Gas, and Solid Separation; Gas and Liquid Contact Apparatus; Refrigeration; Concentrative Evaporators; Mineral Oils Apparatus; Misc. Physical Processes.	5-06-80
ELECTRICAL EXAMINING GROUPS	
INDUSTRIAL ELECTRONICS, PHYSICS AND RELATED ELEMENTS, GROUP 210—S. W. ENGLE, Director Generation and Utilization; General Applications; Conversion and Distribution; Heating and Related Art Conductors; Switches; Photography; Motion Pictures; Horology; Acoustics; Recorders; Weighing Scales.	1-07-80
SPECIAL LAWS ADMINISTRATION, GROUP 220—KENNETH L. CAGE, Director .... Ordnance, Firearms and Ammunition; Lubrication; Illumination; Nuclear Reactors; Acoustics, Communications, Optics; Radar; Directional Radio; Torpedoes; Seismic Exploring; Cathode Ray Tube Circuitry; Cryptography; Laser Devices; Radioactive Materials; Powder Metallurgy, Rocket Fuels; Special, Fuel, Explosive and Thermic Compositions; Thermal and Photoelectric Batteries.	1-18-80
INFORMATION TRANSMISSION, STORAGE, AND RETRIEVAL, GROUP 230—VACANT .... Communications; Multiplexing Techniques; Television; Facsimile; Data Processing, Computation and Conversion; Storage Devices and Related Arts.	1-23-80
RECEPTACLES, SANITATION AND CLEANING, WINDING, AND MEASURING, GROUP 240— A. L. SMITH, Director .... Receptacles; Bearings; Joint Packing; Conduits; Switches; Presses; Plumbing Fixtures; Textile Spinning; Cleaning; Food Treating; Agitating; Centrifugal Separating; Geometrical Instruments; Sound Recording; Image Projectors; Web Feeding; Winding and Reeling; Cable Hoists; Measuring and Testing; Indicating; Fluent Material Handling.	12-07-79
ELECTRONIC COMPONENT SYSTEMS AND DEVICES, GROUP 250—S. S. MATTHEWS, Director .... Semi-Conductor and Space Discharge Systems and Devices; Electronic Component Circuits; Wave Transmission Lines and Networks; Optics; Radiant Energy; Measuring.	4-20-79
DESIGN, GROUP 290—KENNETH L. CAGE, Director .... Industrial Arts; Household, Personal and Fine Arts.	2-08-80
MECHANICAL EXAMINING GROUPS	
HANDLING AND TRANSPORTING MEDIA, GROUP 310—B. R. GRAY, Director .... Conveyors; Hoists; Elevators; Article Handling Implements; Store Service; Sheet Feeding; Dispensing; Fluid Sprinkling; Fire Extinguishers; Coin Handling; Check Controlled Apparatus; Classifying and Assorting Solids; Boats; Ships; Aeronautics; Motor and Land Vehicles and Appurtenances; Brakes; Railways and Railway Equipment.	1-09-80
MATERIAL SHAPING, ARTICLE MANUFACTURING, TOOLS, GROUP 320—M. M. NEWMAN, Director ... Manufacturing Processes, Assembling, Combined Machines, Special Article Making; Metal Deforming; Sheet Metal and Wire Working; Metal Fusion-Bonding, Metal Founding; Machine Tools for Shaping or Dividing; Work and Tool Holders, Woodworking; Tools; Cutlery; Jacks; Fishing, Etc.; Butchering; and Books and Printed Matter.	6-12-79
AMUSEMENT, HUSBANDRY, PERSONAL TREATMENT, INFORMATION, GROUP 330— R. E. AEGERTER, Director .... Amusement and Exercising Devices; Projectors; Animal and Plant Husbandry; Plants; Harvesting; Earth Working and Excavating; Tobacco; Artificial Body Members; Dentistry; Jewelry; Surgery; Toiletry; Printing; Typewriters; Information Dissemination.	1-30-80
HEAT, POWER, AND FLUID ENGINEERING, GROUP 340—D. J. STOCKING, Director .... Power Plants; Combustion Engines; Fluid Motors; Reaction Motors; Pumps; Rotary Engines and Pumps; Heat Generation and Exchange; Refrigeration; Ventilation; Drying; Temperature and Humidity Regulation; Couplings; Gearing; Fluid Handling and Control; Lubrication.	10-22-79
GENERAL CONSTRUCTIONS, TEXTILES, MINING AND GEARING, GROUP 350— G. M. FORLENZA, Director .... Building Structures; Racks; Cabinets; Closures; Supports; Furniture; Fasteners; Locks; Pipe Couplings; Joints; Miscellaneous Hardware; Textiles; Sewing Machines; Apparel; Footwear; Earth Engineering; Earth Drilling; Mining; Wells; Roads; Bridges; Tool Driving; Gearing; Machine Elements; Clutches.	2-19-80

Expiration of patents: The patents within the range of numbers indicated below expire during September 1981, except those which may have expired earlier due to shortened terms under the provisions of Public Law 690, 79th Congress, approved August 8, 1946 (60 Stat. 940) and Public Law 619, 83rd Congress, approved August 23, 1954 (68 Stat. 764), or which may have had their terms curtailed by disclaimer under the provisions of 35 U.S.C. 253. Other patents, issued after the dates of the range of numbers indicated below, may have expired before the full term of 17 years for the same reasons, or have lapsed under the provisions of 35 U.S.C. 151.

Patents .... Numbers 3,146,459 to 3,151,328, inclusive
Plant Patents .... Numbers 2,444 to 2,448, inclusive

DEFENSIVE PUBLICATIONS

PUBLISHED NOVEMBER 3, 1981

Published at the request of the applicant or owner in accordance with the Notice of Dec. 16, 1969, 869 O.G. 687. The abstracts of Defensive Publication applications are identified by distinctly numbered series and are arranged chronologically. The heading of each abstract indicates the number of pages of specification, including claims and sheets of drawings contained in the application as originally filed. The files of these applications are available to the public for inspection and reproduction may be purchased for 30 cents a sheet.

Defensive Publication applications have not been examined as to the merits of alleged invention. The Patent and Trademark Office makes no assertion as to the novelty of the disclosed subject matter.

T101,201
METHOD FOR MAKING STABLE NITRIDE-DEFINED SCHOTTKY BARRIER DIODES

Narasipur G. Anantha, 1 Valdemar Rd., Hopewell Junction, N.Y. 12533, and Harsaran S. Bhatia, 41 Tor Rd., Wappingers Falls, N.Y. 12590

Continuation of Ser. No. 133,069, Mar. 24, 1980, abandoned. This application Apr. 14, 1981, Ser. No. 254,039
Int. Cl.³ H01L *21/308*
U.S. Cl. 156—643
1 Sheets Drawing, 9 Pages Specification

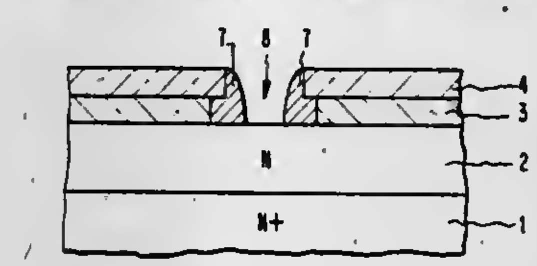

Excessive leakage after initial forward stress, exhibited by subsequently reverse stressed nitride defined, Schottky barrier diodes is solved by the elimination of the "mouse hole" or undercut cavity in the oxide layer beneath the nitride ring defining the Schottky contact to the underlying silicon. The aforementioned cavity is filled by depositing chemical vapor deposited (CVD) oxide onto the nitride layer, into the nitride ring and the undercut oxide cavity beneath the ring and onto the underlying silicon substrate exposed through the nitride ring. The CVD oxide is then reactively ion etched to remove it except along the vertical walls of the nitride ring and the oxide cavity. The Schottky metal is deposited on the silicon substrate exposed by the reactive ion etching step.

T101,202
CARBURETOR IDLE SYSTEM AIR/FUEL RATIO CONTROL

John H. Furbacher, 21559 Military; Edwin K. Ratledge, 307 S. Vernon, both of Dearborn, Wayne County, Mich. 48124, and Richard A. Ullmann, 8616 Nancy, Macomb County, Utica, Mich. 48087

Continuation of Ser. No. 82,351, Oct. 5, 1979, abandoned. This application Dec. 23, 1980, Ser. No. 219,558
Int. Cl.³ F02M *7/02*
U.S. Cl. 261—41 D
1 Sheets Drawing, 13 Pages Specification

A carburetor is provided with a separate idle air/fuel system containing an idle fuel metering jet or orifice; and an idle fuel tube connected to an induction passage discharge port downstream of the throttle valve, the idle fuel tube being surrounded or enclosed near the discharge end by an air well connected to a main air bleed, this portion of the idle tube having air bleed holes for mixing air with the fuel to provide acceptable driveability during idle speed operation, the diameter of the holes being mathematically calculatable to vary in a direct relation to the size of the idle metering jet and in an inverse relation to the diameter of the idle air well tube, to provide an essentially

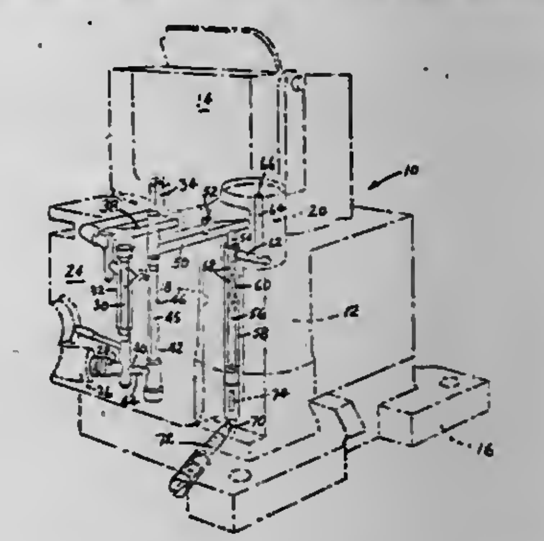

constant air/fuel ratio to the idle mixture flow upon changes in either the idle jet size or the idle tube size.

T101,203
PROCESS FOR PRODUCTION OF GRANULAR DIAMMONIUM PHOSPHATE

Byron R. Parker, Rte. 7, Box 117, Florence, Ala. 35630, and Melvin M. Norton, Rte. 1, Virginia Shores, Sheffield, Ala. 35660

Filed Oct. 23, 1980, Ser. No. 199,795
Int. Cl.³ C05B *7/00*; C05C *9/00*
U.S. Cl. 71—29
4 Sheets Drawing. 25 Pages Specification

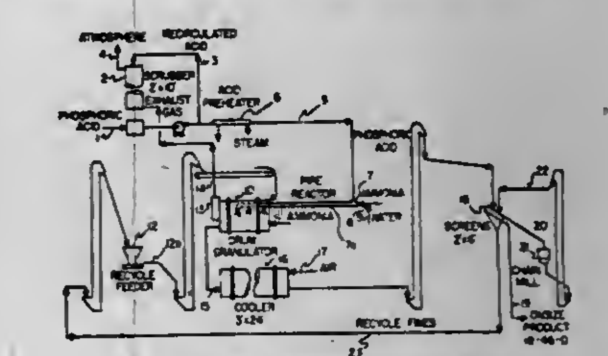

FLOW DIAGRAM OF GRANULATION PILOT-PLANT FOR PRODUCTION OF DIAMMONIUM PHOSPHATE USING THE PIPE REACTOR

Process for production of diammonium phosphate from orthophosphoric acid and ammonia. A specially designed inline reactor, a pipe reactor, is used to produce a homogeneous slurry with a lower moisture content than can be produced and pumped utilizing a preneutralizer as used in many prior-art granular fertilizer processes. Because of the lower moisture content of the slurry, drying requirements are eliminated. This eliminates two items of equipment, to wit, a preneutralizer and a dryer, and greatly simplifies pollution abatement since both items are sources of fumes and dust. The equipment utilized in the present process is inexpensive and simple to operate. The products produced are dust-free and of such particle size distribution that they are well suited for subsequent use in producing bulk blends.

T101,204
COMPACT FAST NUCLEAR REACTOR USING HEAT PIPES
Viktor E. Hampel, 2783 Carlew Ct., Pleasanton, Calif. 94566
Filed Oct. 16, 1980, Ser. No. 197,464
Int. Cl.³ G21C *15/00*
U.S. Cl. 376—221
7 Sheets Drawing. 35 Pages Specification

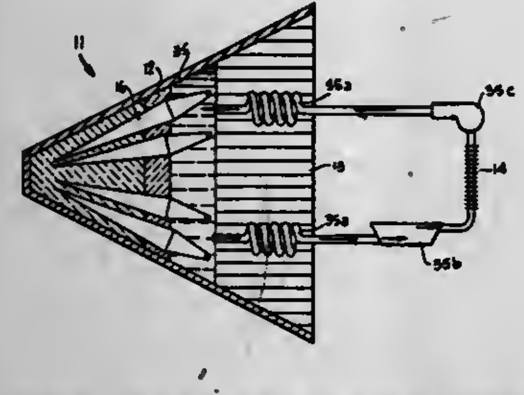

A fast nuclear reactor is described which comprises a conical reactor core surrounding an embedded array of heat pipes of, per se, novel structure, carrying either moderator or nuclear fuel material as part of their working fluid. This reactor system is self-regulating, because an excessive increase in reactivity drives the fuel or moderator working fluid out of the conical core region, thereby reducing reactivity. The heat pipes are protected against burnout by a novel heat pipe envelope shape and internal wicking structure designed to increase the working fluid circulation speed with increasing heat transfer loads.

T101,205
MOLDING PROCESS
Gordon K. Goulder, 404 Claymore Dr., Kingsport, Tenn. 37663, and Edward R. Hollander, Jr., Rte. 13, 213 Montezuma Rd., Kingsport, Tenn. 37664
Filed Jan. 26, 1981, Ser. No. 228,415
Int. Cl.³ B29C *17/07*
U.S. Cl. 264—523
No Drawing. 6 Pages Specification

A process of forming a polyethylene terephthalate container in which the container is biaxially oriented simultaneously with being blow-molded. The container is allowed to remain in the blow mold having a surface temperature between about 150° C. and about 250° C. for a time sufficiently long to result in the container reaching a crystallinity of at least 30% while the pressure is simultaneously maintained above atmosphere inside the container to prevent collapse thereof. The process enhances dimensional stability at temperatures sufficiently high to normally cause shrinkage of the container.

T101,206
COTTON HARVESTER
Horace E. Ralston, 7260 Locke Rd., Millington, Tenn. 38053, and Jesse H. Orsborn, 5836 Bentley, Clarendon Hills, Ill. 60514
Filed Nov. 21, 1980, Ser. No. 208,913
Int. Cl.³ A01D *35/12, 47/00, 41/00*
U.S. Cl. 56—15.6
2 Sheets Drawing. 8 Pages Specification

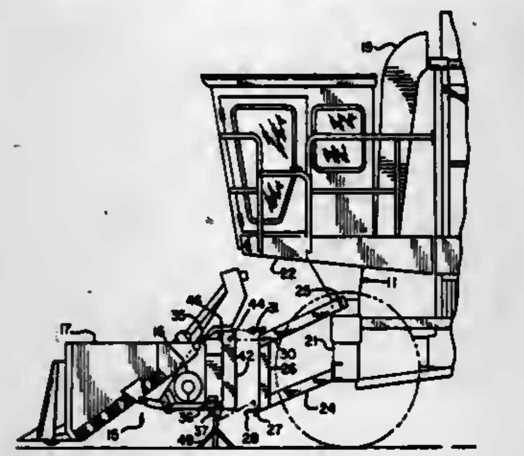

Apparatus for attaching a harvesting header to the vertically fixed subframes of a cotton harvester chassis including apertured borizontal header frame support plates extending forwardly from the lower portion of the subframes, latch pins on the header for engaging the apertures, linear adjustable drawing members releasably interconnecting the upper portion of the header to the upper portion of the subframe, and a pair of spaced vertical plates extending rearwardly from the header and intermeshing with a vertical interface member on the subframe, preferably being pinned thereto for operation of the harvester.

REISSUES

NOVEMBER 3, 1981

Matter enclosed in heavy brackets [ ] appears in the original patent but forms no part of this reissue specification; matter printed in italics indicates additions made by reissue.

Re. 30,786
DISPOSABLE IDENTIFICATION BAND BLANK
Gerald L. Wiebe, 53 E. St. Charles Rd., Villa Park, Ill. 60181
Original No. 4,078,324, dated Mar. 14, 1978, Ser. No. 646,365, Jan. 2, 1976. Continuation of Ser. No. 464,750, Apr. 29, 1974, abandoned. Application for reissue Nov. 2, 1978, Ser. No. 957,148
Int. Cl.³ G09F *3/14*
U.S. Cl. 40—21 C **32 Claims**

1. A disposable identification band blank adapted for inscription and subsequent application to a patient's limb which is a laminated, elongated, flexible body terminating in overlappable extremities and comprising a base strip of flexible nonirritating material; a first adhesive coating on one side of the base strip; a segment of pressure-sensitive record material means displaying a distinctive color when subjected to localized pressure superposed on and adhesively bonded to a central portion of the base strip; a flexible, transparent cover strip coextensive with said base strip and adhesively secured to said base strip; a second adhesive coating on at least a central portion of the cover strip surface which faces said segment of pressure-sensitive record material means and adhesively bonding the central portion of the cover strip to said segment of a pressure-sensitive record material means and to said base strip; and adhesive attachment means on at least one of said band extremities for adhesively bonding overlapping portions of the band extremities; said adhesive attachment means comprising a third adhesive coating on an overlapping face of one of said extremities and at least one release sheet segment having dual release surfaces at the other of said extremities and being removably disposed between said base strip and said cover strip; said third adhesive coating being situated on an overlapping face of the base strip at said extremities and covered with a release sheet substantially coextensive therewith; and said release sheet covering said third adhesive coating being more rigid than the extremity bearing said third adhesive coating.

Re. 30,787
HAND HELD MASKING MACHINE
Danny L. Pool, 2025 E. Jackson, Phoenix, Ariz. 85034, and Robert R. Pool, 607 E. Franklin, Mesa, Ariz. 85204
Original No. 4,096,021, dated Jun. 20, 1978, Ser. No. 778,704, Mar. 17, 1977. Application for reissue Jan. 27, 1979, Ser. No. 53,113
Int. Cl.³ B32B *31/08*
U.S. Cl. 156—527 **7 Claims**

13. A hand held masking machine comprising:

a substantially flat frame having an outer and an inner side, and front, central and rear portions;

an offset to the flat frame member connected to the central portion and displaced in the direction of the outer side of the frame;

a tape roll holder mounted on the outer side of the rear portion of the frame for rotation about a first axis of rotation, said tape roll holder adapted to have a roll of masking tape mounted on the tape roll holder, each roll of masking tape adapted to be mounted on the tape roll holder having a width and an outer edge, the width of each such roll of masking tape not necessarily being the same so that the distance of the outer edge of the tape from the outer side of the frame is a function of the width of the tape;

a paper roll holder mounted on the offset for rotation about a second axis of rotation, said first and second axes of rotation being substantially parallel but displaced from one another, said paper roll holder adapted to have a roll of paper mounted thereon for rotation about the second axis of rotation, said paper roll holder being mounted on the offset so that the majority of the width of a roll of paper mounted thereon is positioned beyond the inner side of the frame, said paper roll being positioned so that the tape dispensed from a roll of tape mounted on the tape roll holder overlaps an edge of the paper dispensed from a roll of paper mounted on the paper roll holder;

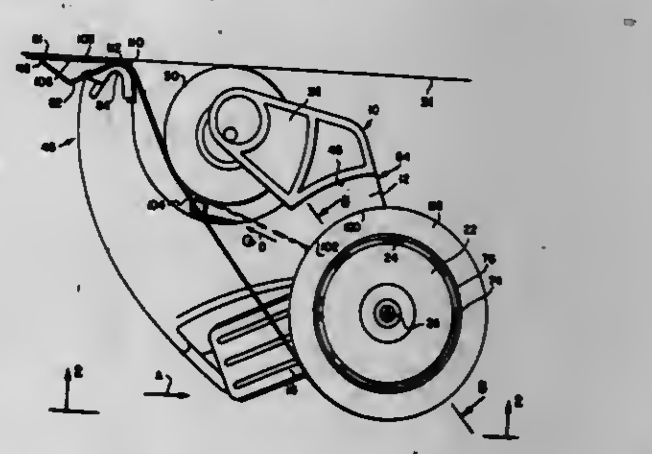

a handle bracket mounted on the central portion of the frame and extending in a direction substantially parallel to the second axis of rotation and away from the inner side of the frame;

a handle secured to the handle bracket, said handle being positioned so that the hand of the user of the masking machine gripping the handle is spaced from the inner side of the frame;

guide bar mounting means formed at the front portion of the frame; and

a guide bar having a tape end adjustably mounted on the guide bar mounting means so that the tape end of the guide bar can be positioned to substantially be aligned with the outer edge of the tape positioned on the tape roll holder.

Re. 30,788
Patent Not Issued For This Number

Re. 30,789
PROCESS FOR COATING SHEET SUBSTRATES WITH THERMOPLASTIC POLYMER
James F. Pilgrim, Glenburnie, and Ronald A. Hunter, Amherstview, both of Canada, assignors to E. I. Du Pont de Nemours and Company, Wilmington, Del.
Original No. 4,143,187, dated Mar. 6, 1979, Ser. No. 856,506, Dec. 1, 1977. Application for reissue Nov. 26, 1979, Ser. No. 97,234
Int. Cl.³ B05D *3/12*
U.S. Cl. 427—358 **7 Claims**

15. In a process for coating a substantially inflexible sheet

substrate with a coating of thermoplastic polymer having a thick-

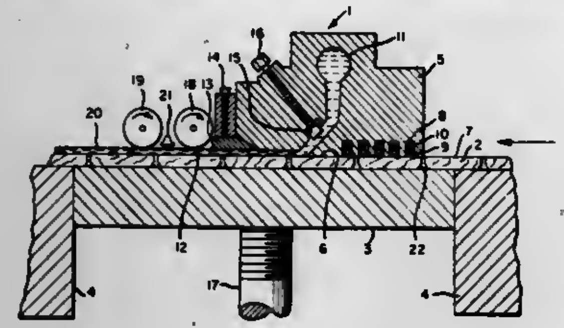

ness of at least 0.25 mm in which molten thermoplastic polymer is extruded between first and second die lips of an extrusion coating die and onto the face of said sheet substrate, said extrusion die being formed, in part, of a metal block having means to feed molten polymer therethrough to said die lips, the improvement comprising feeding a wood sheet substrate in face-to-face contact with said metal block over substantially the entire width of said sheet substrate, passing said sheet substrate from contact with the metal block into spaced apart relationship with the first die lip, said sheet substrate thereby forming the second die lip of the extrusion coating die, the first die lip extending substantially parallel to and in spaced apart relationship from the sheet substrate for a distance of at least 10 cm, said sheet substrate having a plurality of openings selected from the group consisting of orifices or slits in the surface thereof, extruding molten thermoplastic polymer into the space between the first die lip and the sheet substrate and thereby coating the sheet substrate with thermoplastic polymer.

PLANT PATENTS

GRANTED NOVEMBER 3, 1981

Illustrations for plant patents are usually in color and therefore it is not practicable to reproduce the drawing.

4,784
TABLE GRAPE
Harold P. Olmo, Putah Creek Levee Rd., and Albert T. Koyama, 713 Hunt Way, both of Davis, Calif. 95616
Filed Jan. 28, 1980, Ser. No. 115,858
Int. Cl.³ A01H *5/00*
U.S. Cl. Plt.—47 **1 Claim**

1. The new and distinct variety of table grape herein described and illustrated and identified by the characteristics enumerated above.

4,785
GERANIUM PLANT
Walter H. Jessel, Jr., Fremont, and William E. Duffett, Salinas, both of Calif., assignors to Yoder Brothers, Inc., Barberton, Ohio
Filed Aug. 5, 1980, Ser. No. 175,426
Int. Cl.³ A01H *5/00*
U.S. Cl. Plt.—68 **1 Claim**

1. A new and distinct geranium plant, a hybrid of the genus Pelargonium, L'Her., referred to by the cultivar name Fame, as described and illustrated, and characterized by the combination of characteristics of scarlet red flower color; medium plant height; short internode length; semi-double flower form; semi-spreading branching pattern; early spring-pot flowering response; prolific outdoor summer flowering traits; good foliage durability; good flower durability; and dark green foliage color with pronounced dark zonation.

4,786
CHRYSANTHEMUM PLANT
Walter H. Jessel, Jr., Fremont, and William E. Duffett, Salinas, both of Calif., assignors to Yoder Brothers, Inc., Barberton, Ohio
Filed Aug. 5, 1980, Ser. No. 175,752
Int. Cl.³ A01H *5/00*
U.S. Cl. Plt.—74 **1 Claim**

1. A new and distinct cultivar of *Chrysanthemum morifolium*, Ramat., plant known by the cultivar name Cheers and particularly characterized as to uniqueness, as herein described and illustrated, by the combined characteristics of flat capitulum form; daisy capitulum type; white ray floret color; diameter across face of capitulum ranging from 95 to 105 mm. at maturity; uniform seven week photoperiodic flowering response to short days; long peduncle length; medium plant height when grown as a single stem cut spray; and semi-upright branching pattern.

PATENTS

GRANTED NOV. 3, 1981

ERRATA

For CLASS	See PATENT NO.
174–138	4,297,769
368–076	4,297,838
280–777	4,297,911
361–248	4,297,947
220–070	4,298,143
501–105	4,298,385
501–080	4,298,386
501–092	4,298,387
501–015	4,298,388
501–077	4,298,389
501–032	4,298,390
376–290	4,298,431
376–365	4,298,432
376–286	4,298,433
376–364	4,298,434
073–864	4,298,575
376–108	4,298,804
376–111	4,298,805

PATENTS

GRANTED NOVEMBER 3, 1981

GENERAL AND MECHANICAL

4,297,746

TORSO GARMENT INCORPORATING REMOVABLE HAND COVERINGS

Catherine Zarbos, 845 Brunswick Rd., Baltimore, Md. 21221

Filed Jun. 27, 1980, Ser. No. 163,590

Int. Cl.³ A41D *1/02*

U.S. Cl. 2—108 **7 Claims**

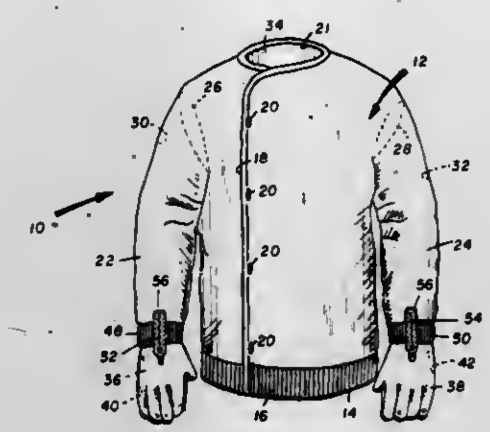

1. A garment for covering the upper torso, arms, and hands of a wearer comprising:

a body portion dimensioned to cover the torso of the wearer, said body portion having a pair of arm apertures disposed through the sides thereof through which the arms of the wearer pass when said body portion is disposed on said torso;

a pair of arm portions dimensioned to cover said arms of said wearer, each of said arm portions being affixed on one end thereof to said body portion about one of said arm apertures to form a sleeve, the interior of said sleeves communicating with the interior of said body portion;

a pair of hand covering portions dimensioned to cover the hands of said wearer, one of said hand covering portions being affixed to the other ends of each of said arm portions, the interior of each of said hand covering portions communicating with the corresponding arm portion, said arm portions and said hand covering portions thereby forming a pair of integral arm-hand covering portions;

each of said integral arm-hand covering portions having disposed therein a slit dimensioned to pass the adjacent hand of the wearer therethrough, each of said slits being disposed in the associated said arm-hand covering portions in the portion thereof which resides proximate to the back of the adjacent wrist of the wearer when wearing said garment, said slit in each of said integral arm-hand covering portions being longitudinally disposed relative to the longitudinal axis of the associated said arm portion, an annular section of each of said arm-hand covering portions being reinforced, said longitudinally disposed slit in each arm-hand covering portion extending through said corresponding annular reinforced section, each of said slits being dimensioned to permit tucking of said adjacent hand covering portion into said adjacent arm portion proximate to the underside of the wrist of the wearer when the hand of the wearer is extended through said slit, said annular reinforced portions thereby serving as a cuff for said arm portion; and

a pair of selective closure means for closing and opening said slits as desired by the wearer.

4,297,747

DEVICE TO ACTUATE HELMET VISORS, PARTICULARLY FOR MOTORCYCLISTS

Pier L. Nava, Verderio Superiore, Como, Italy

Filed Feb. 29, 1980, Ser. No. 125,986

Claims priority, application Italy, Jul. 27, 1979, 24747 A/79

Int. Cl.³ A42B *3/02;* **A61F** *9/00*

U.S. Cl. 2—424 **12 Claims**

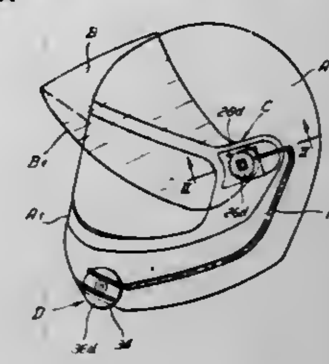

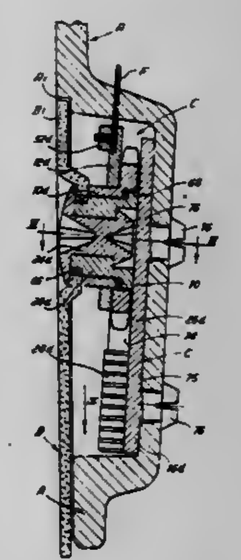

1. A device for actuating a visor of a helmet, said helmet having a front aperture bounded by a ledge for housing the peripheral portion of said visor comprising:

first and second hinges connected to support said visor for angular rotation and linear motion into and out of communication with said ledge;

first and second guides located on opposite sides of said helmet;

first and second pinions connected to rotate said hinges and visor, said pinions being located within said guides;

first and second slide elements connected to each of said pinions for linearly displacing said pinions whereby said visor is linearly moved away from said helmet ledge;

first and second racks disposed within said guides for engaging said pinions when said visor has been displaced from said helmet ledge whereby said visors are angularly displaced by continued linear movement of said pinions; and

a control element for linearly displacing said slide elements within said guides whereby said visor is linearly displaced to and from said ledge and angularly rotated.

11. A device according to claims 1 or 9, further comprising means for inhibiting rotation of said pinions when said pinions are free of said racks.

4,297,748
MIDDLE EAR BALLOON
Peter J. Moloy, 29 Cypress Way, Rolling Hills Estates, Calif. 90274
Filed Jan. 2, 1980, Ser. No. 109,161
Int. Cl.³ A61F *1/00*
U.S. Cl. 3—1 12 Claims

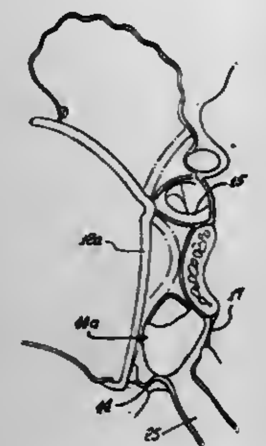

1. The method of reducing blockage of air wave induced motion of the round window membrane in the inner ear, and employing a pillow, that includes
(a) sizing the pillow for reception in the hypotympanum recess, and
(b) implanting the pillow in said recess in a location to yieldably block displacement of the tympanic membrane toward the round window membrane, thereby to prevent undesired interference with motion of the round window membrane by motion of the tympanic membrane.

4,297,749
HEART VALVE PROSTHESIS
Robert B. Davis, Framingham; John Skelton, Sharon, both of Mass.; Richard E. Clark, and Wilbur M. Swanson, both of St. Louis, Mo., assignors to Albany International Corp., Albany, N.Y. and Washington University, St. Louis, Mo.
Continuation-in-part of Ser. No. 790,442, Apr. 25, 1977, Pat. No. 4,192,020, which is a continuation-in-part of Ser. No. 771,359, Feb. 23, 1977, abandoned, which is a continuation-in-part of Ser. No. 575,438, May 7, 1975, abandoned. This application Feb. 27, 1980, Ser. No. 125,121
Int. Cl.³ A61F *1/22*
U.S. Cl. 3—1.5 6 Claims

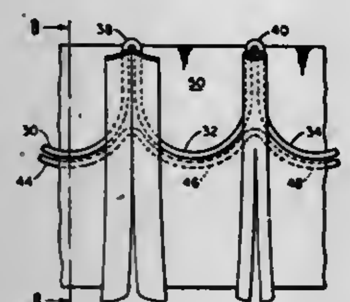

1. A frame system for a heart valve prosthesis comprising:
a first frame having at least three generally parallel legs each comprising a pair of rod portions connected at one end and diverging at the other end as lobes respectively connecting with rod portions of others of said legs, the lobes forming an aperture therebetween, said legs being adapted to receive the margin of a valve leaflet between the rod portions thereof, whereby said leaflet may be secured to two adjacent legs and the interconnecting lobe so as to have a free edge extending between said adjacent legs; and
a second frame adapted to nest with said first frame comprising a rod formed in a closed loop to be substantially congruent with each of said interconnecting lobes between the points of divergence at said other ends of each of said pairs of rod portions, whereby said leaflet may be secured to a lobe by passing it between said frames.

4,297,750
TOILET AND COVER
Rainer M. Lutz, Reichberg 29, 7827 Löffingen, Fed. Rep. of Germany
Filed Aug. 28, 1979, Ser. No. 70,355
Int. Cl.³ A47K *13/18, 13/16*
U.S. Cl. 4—247 16 Claims

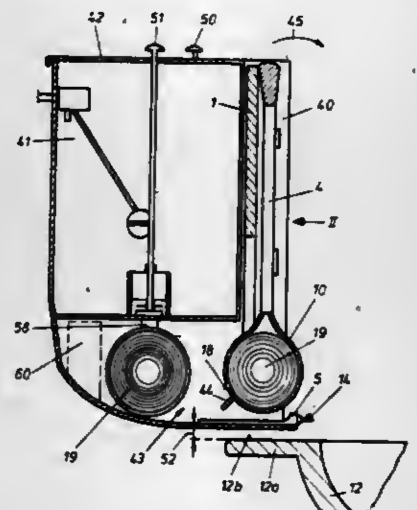

1. In combination, a toilet bowl, a toilet seat, means hingedly supporting said toilet seat for rotation around a transverse hinge axis adjacent the rear portion of said toilet bowl and allowing the seat to supportingly engage on the rim of said toilet bowl, dispensing housing means adjacent said toilet bowl rear portion mounted coaxially with said hinge axis, and rigidly connected to said seat, and a supply of frangible web material disposed in said dispensing housing means and being of a width sufficient to overlie the toilet seat, said housing means having a dispensing opening in its rear top side arranged to permit withdrawal of the web material to cover the seat, said web material including separable substantially identical main seat cover sheets sucessively movable to a position covering the seat, the seat cover sheets being formed to define on each sheet respective front and rear freely descending flaps of a length sufficient to become at least partially immersed in the water in the toilet bowl and shaped to define a composite opening substantially conforming with the interior of the toilet bowl when said flaps drop to depending positions, said flaps being formed so that the respective flaps assume depending immersed transverse positions adjacent to and shielding the front and rear inside wall surfaces of the toilet bowl.

4,297,751
SEWER SYSTEM
Henry Olin, Espoo; Nils Tallberg, Helsinki, and Martti Varis, Espoo, all of Finland, assignors to Oy Wartsila AB, Helsinki, Finland
Filed Aug. 17, 1979, Ser. No. 67,299
Claims priority, application Finland, Aug. 25, 1978, 782603
Int. Cl.³ E03D *11/00*
U.S. Cl. 4—431 15 Claims
1. A sewer system including
means for generating a partial vacuum for transporting sewage through a sewer pipe to a collecting chamber for an installation comprising a small number of sewage producing units, preferably only one of said sewage producing units being usable at a time,
said sewer pipe between each said sewage producing unit and said collecting chamber having a small total volume,
control means for starting and stopping said partial vacuum generating means, and
means for activating said control means for generating a vacuum in said sewer pipe principally only for the time required for transporting each separate sewage discharge

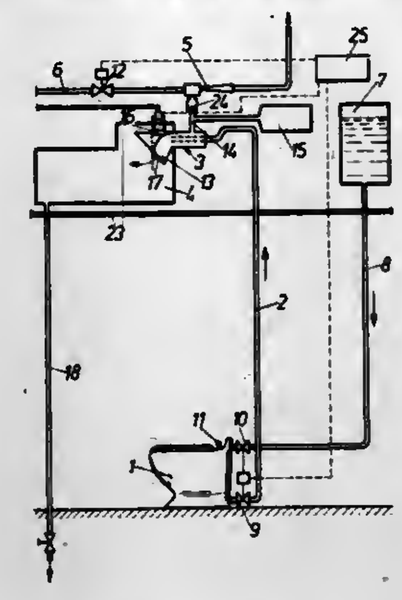

from a selected one of said small number of sewage producing units to said collecting chamber, and
said sewer pipe being otherwise under a higher pressure.

4,297,752
CONVERTIBLE FURNITURE
Calvin Dick, 2725 Cooper Ct., Apt. 1, Napa, Calif. 94558, and Patrick C. Malone, Richardson, Tex., assignors to Calvin Dick, Napa, Calif.
Filed Jul. 16, 1979, Ser. No. 58,070
Int. Cl.³ A47C *17/12, 17/16, 17/04*
U.S. Cl. 5—52 8 Claims

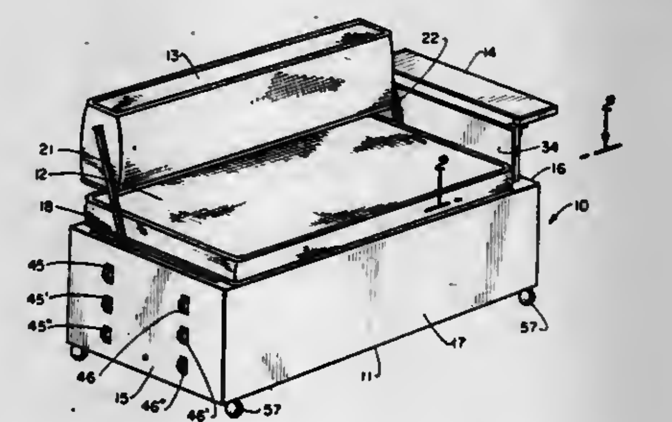

1. An article of furniture convertible between a couch or loveseat and a daybed or the like comprising:
a main housing comprising spaced front and rear walls interconnected by spaced side walls;
a horizontal seat closing off the upper surface of said main housing;
a back rest mounted on said main housing having a portion vertical with respect to said seat, and back rest connecting means coupling said vertical portion to said main housing for orienting said vertical portion from either a point adjacent the front of said main housing or the rear thereof;
an arm rest coupled to said main housing having a planar surface parallel to that of said seat in a first position;
arm rest connecting means connecting said arm rest to said main housing for alternately placing said arm rest in a first position wherein said planar surface thereof is spaced vertically upwardly from the planar surface of said seat to a second position wherein the planar surface of said arm rest is angularly disposed with respect to the planar surface of said seat, wherein said arm rest connecting means includes an elongated slot in at least one of said sidewalls, and an arm rest supporting means hingedly connected to said arm rest, extending down into said slot.

4,297,753
PATIENT TRANSFER DEVICE
Robert J. Langren, Alameda, Calif., assignor to Warner-Lambert Company, Morris Plains, N.J.
Filed Sep. 7, 1979, Ser. No. 73,416
Int. Cl.³ A61G *7/08, 12/00*
U.S. Cl. 5—81 C 8 Claims

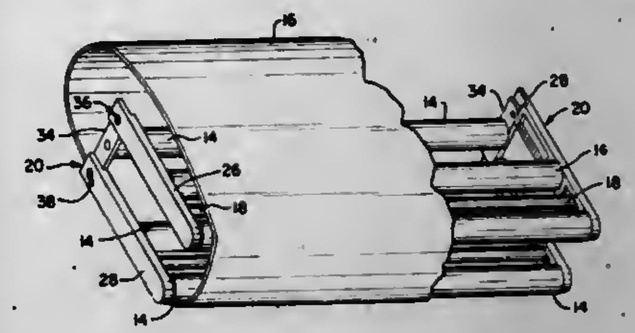

1. In a patient transfer device having a frame with trussed opposite end plates carrying a plurality of parallel rollers which support an endless belt very tightly, the improvement comprising:
means permitting selective folding of said end plates from a straight configuration, defining a tight belt condition, into a U-shaped configuration, defining a loose belt condition and
cam means for releasably locking said plates in said straight configuration.

4,297,754
BOX SPRING AND MATTRESS SUPPORT DEVICE
Julio A. Zuniga, 2310 Powell St., San Francisco, Calif. 94133
Filed Dec. 10, 1979, Ser. No. 102,012
Int. Cl.³ A47C *21/00*
U.S. Cl. 5—411 8 Claims

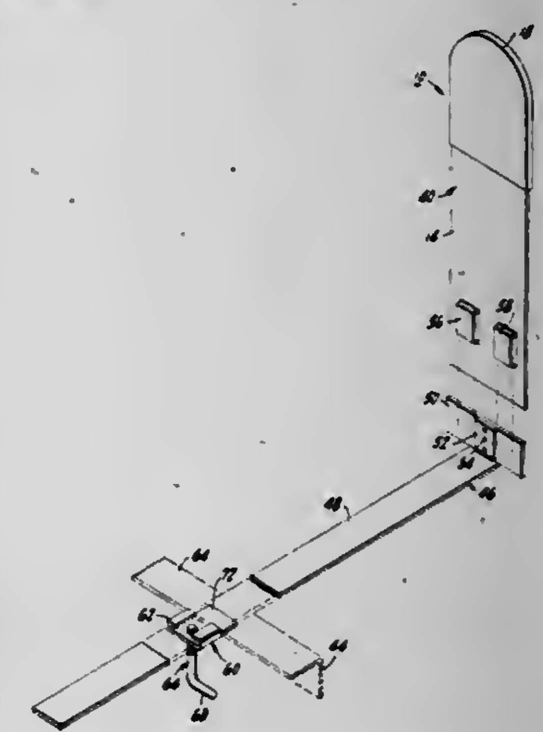

1. A box spring and mattress supporting device useable with a bed frame that includes a supporting member for said box spring and mattress, comprising:
a. an upright member adapted for extending upwardly adjacent the box spring and mattress;
b. clip means for holding said upright member to the supporting member of the bed frame, said clip means including an element extending from said upright member and forming a channel in conjunction with a portion of said upright member; said channel being capable of at least partially surrounding the supporting member, and having a portion of said element extending from said upright member passing over the top portion of the supporting

member, said supporting device being adapted to prevent the slippage of said box spring and mattress relative to said frame.

4,297,755
NON-PLANAR WATERBED
Carlos A. Mollura, 2824 Del Oro Pl., Fullerton, Calif. 92632
Filed Feb. 15, 1980, Ser. No. 121,906
Int. Cl.³ A47C *27/08*
U.S. Cl. 5—455 **3 Claims**

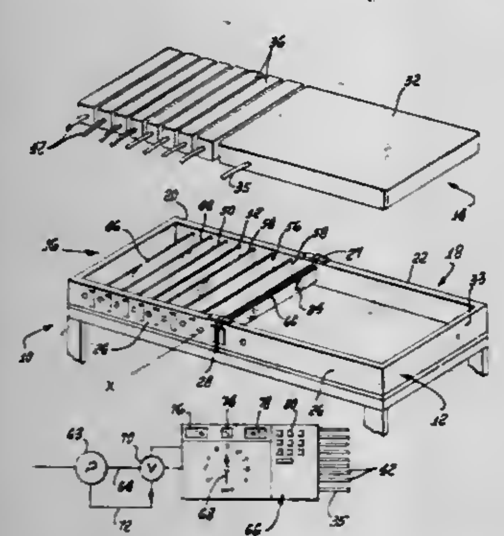

1. In a waterbed structure:
(a) a waterbed frame including a plurality of sections, at least one of which is inclined, said one frame section having side walls;
(b) a series of supports extending across the inclined frame section and defining a series of individual pockets for waterbed bag elements;
(c) a series of individual waterbed bag elements in said pockets and supported by said supports;
(d) waterbed bag means for the remaining section or sections of said frame;
(e) said waterbed bag elements being contiguous with each other to provide an integral substantially flat support surface adjoining said waterbed bag means;
(f) each of said supports being structurally connected to said side walls of said frame whereby said supports sustain components of the weight of said bag elements in said pockets.

4,297,756
LOCKING WRENCH TOOL WITH AUXILIARY MECHANICAL OUTPUT
Bruce J. Lance, 1400 Chase Dr., Corona, Calif. 91720
Continuation-in-part of Ser. No. 83,000, Oct. 9, 1979, abandoned. This application Mar. 7, 1980, Ser. No. 128,307
Int. Cl.³ B25B *7/22, 7/12*
U.S. Cl. 7—127 **7 Claims**

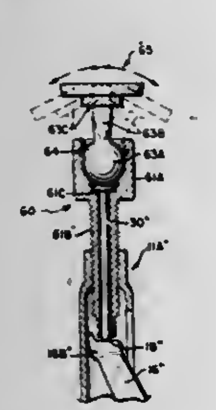

1. In a locking wrench tool having coacting jaws, fixed and movable handle structure and resiliently biased toggle mechanism operative to maintain the coacting jaws of said tool locked clamped, the improvement in combination therewith of auxiliary means for generating a mechanical output, said auxiliary mechanical output generating means being actuated to generate a mechanical output by the movement and positioning of said toggle mechanism occurring in connection with the clamping action of said tool and comprising:
ball means for supporting an object to be held, said ball means including a substantially round ball with an extension member formed to extend therefrom, said extension member being adapted to engage and support an object to be held;
socket means for receiving and rotatably holding said ball therein; and
means actuated by the movement and positioning of said toggle mechanism occurring in connection with the clamping action of said tool for clamping said ball against rotation in a fixed position in said socket means.

4,297,757
MARINE RESCUE CAPSULE
Oscar M. Palemón Camú, 40-C Estocolmo St., Mexico City 6, Mexico
Filed Aug. 3, 1978, Ser. No. 930,607
Int. Cl.³ B63C *9/02*
U.S. Cl. 9—4 R **12 Claims**

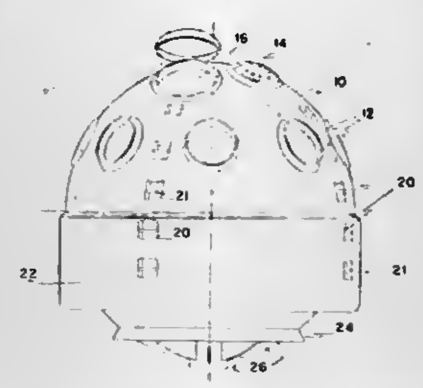

12. A marine livesaving capsule of substantially spherical configuration carrying on the upper third of its body portholes which are watertight but allow the penetration of solar light; having doors or hatches for access disposed either on the top or the sides of its body; a series of radial fins on the bottom limited by a peripheral fin for stabilizing the capsule; an air chamber surrounding it the upper edge of which coincides substantially with the flotation line of the capsule; a telescoping stabilizing counterweight having its axis coinciding with the vertical axis of the capsule; a system of ventilation provided in at least two upper hatches of the capsule; and a ring-shaped seat under which several compartments are set off for storage of dehydrated provisions, water, navigational equipment, toilet, etc.,
the said system of ventilation being fixedly mounted on one of the upper hatches of the capsule.

4,297,758
LIFE PRESERVER OF THE ENCAPSULATED TYPE
Harold J. Moran, Trenton, N.J., assignor to Switlik Parachute Company, Inc., Trenton, N.J.
Filed Jan. 28, 1980, Ser. No. 115,982
Int. Cl.³ B63C *9/16*
U.S. Cl. 9—340 **12 Claims**

1. In an inflatable life preserver of the encapsulated type including an inflatable cell means, said life preserver further including a cover adapted to provide a primary protective enclosure for the cell means in an inflated condition of said means, said cover having flexible, normally connected panels in protective embracing relation to the inflated cell means and also having separable fastener elements on the panels adapted to disengage for separation of the panels in response to inflation of the cell means, the improvement that comprises a protective flap inside the cover adapted to cooperate with at least one of the panels to provide an auxiliary enclosure for the cell means in the event of accidental separation of the panels with the cell means in an inflated condition, the panels having inner edges connected together to define said open center and have

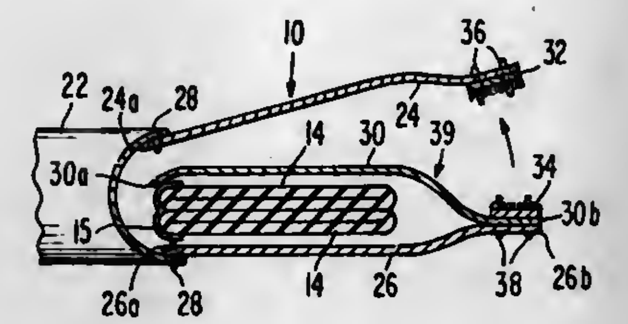

outer edges along which the fastened elements are disposed, said flap having an outer edge secured to the outer edge of said one panel, the flap and said one panel being substantially coextensive in width with the flap having a free inner edge overlying and in close proximity to the inner edge of said one panel.

4,297,759
FLOATING BRIDGE
Friedhelm Soffge, Kornwestheim, and Hans Weigele, Stuttgart, both of Fed. Rep. of Germany, assignors to Dr. Ing. h.c.F. Porsche AG, Stuttgart, Fed. Rep. of Germany
Filed Nov. 26, 1979, Ser. No. 97,122
Claims priority, application Fed. Rep. of Germany, Nov. 24, 1978, 2850848
Int. Cl.³ E01D *15/14*
U.S. Cl. 14—2.6 **6 Claims**

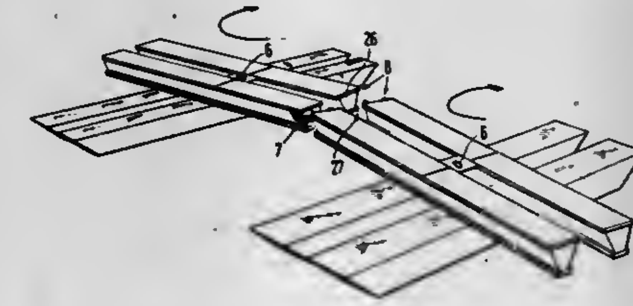

1. A transportable floating bridge comprising a bridge unit, a buoyant pontoon means supporting said bridge unit, displacement means carried by said pontoon means for lifting and pivoting said bridge unit, rotatable fixing means carried by the bridge unit for swingably linking said bridge unit to a like pontoon means supported bridge unit in a manner enabling relative rotation therebetween in a horizontal plane, and coupling means carried by the bridge unit for rigidly coupling said bridge unit to said like pontoon means supported bridge unit.

4,297,760
DEBRIS PICKER AND BAGGER
Humbert Olivari, 3835 Janbrook Rd., Randallstown, Md. 21133
Division of Ser. No. 937,302, Aug. 28, 1978, Pat. No. 4,217,672. This application Feb. 4, 1980, Ser. No. 118,232
Int. Cl.³ E01H *1/04;* A01G *1/12*
U.S. Cl. 15—79 R **12 Claims**

1. A device for collecting debris from the ground and depositing said debris in a disposable container, comprising:
a pair of support wheels spaced apart, said wheels providing power when in motion to operate debris collecting and depositing mechanism;
a gear system connected to said support wheels to receive power from said support wheels and transmit said power to said debris collecting and depositing mechanism;
a cover system for said gear system;
a plurality of spaced debris raking means on a rotatable shaft, said rotatable shaft being connected to said gear system and receiving power therefrom for rotating said debris raking means;
a rotatable cylindrical drum means surrounding said debris raking means, with spaced rectangular shaped slots therein to permit ends of said debris raking means to extend therethrough, said cylindrical drum being excentrically connected to said gear system;
a housing means surrounding said cylindrical drum means connected to and supported by the cover system for said

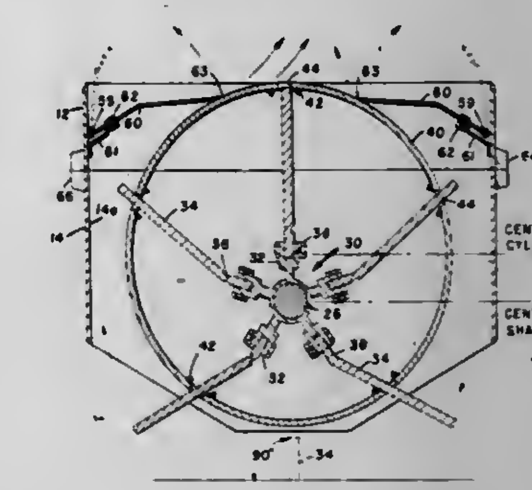

gear system, said housing means forming a chute means to conduct collected debris into a disposable container;
a disposable container means for receiving and holding said collected debris removably connected to said housing means and communicating therewith;
a handle means for manually pushing said device for collecting debris, said handle means being attached to said housing means; and
an adjustable support means for the rear of said device for collecting debris, said adjustable support means connected to said housing means.

4,297,761
GARBAGE DISPOSAL UTENSIL
Evelyn J. Loos, Saratoga, Calif., assignor to Stanley M. Weir, Santa Clara, Calif.
Filed Jun. 26, 1980, Ser. No. 163,392
Int. Cl.³ A47L *25/00*
U.S. Cl. 15—105 **3 Claims**

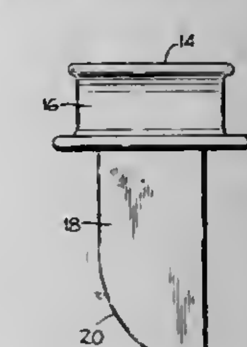

1. A multi-purpose disposal utensil for use with a garbage disposer comprising:
a plug adapted to fit in a drainhole opening above a garbage disposer;
a handgrip secured to the top side of the plug; and
an elongated sweeping-agitating member secured to the bottom side of the plug for sweeping garbage into a garbage disposer drain hole and for urging garbage into the garbage disposer, said sweeping-agitating member adapted to reach substantially all the area in a garbage disposer drainhole above a garbage disposer when said plug is nearly seated in the drainhole opening and manually rotated by the handgrip.

4,297,762
PAINT TRAY AND RESERVOIR
Donald T. Crysdale, Milwaukee, Wis., assignor to E Z Paintr Corporation, Milwaukee, Wis.
Filed Sep. 27, 1979, Ser. No. 79,311
Int. Cl.³ B44D *3/12*
U.S. Cl. 15—257.06 **15 Claims**

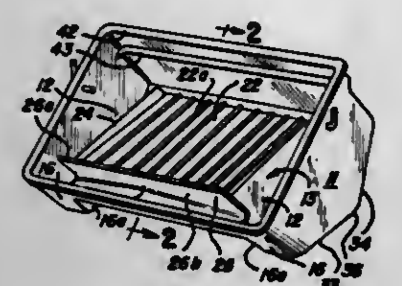

1. An apparatus for dispensing liquid to an applicator, comprising:
a plastic vessel having a first means for storing liquid and second means for dispensing liquid wherein said second means is a tray removably mounted in said apparatus, said vessel having an open upper end suitable for intake of liquid and for insertion of an applicator for picking up liquid from said second means;
a base supporting said vessel securely in a first operative position wherein said second means retains said liquid;
an auxiliary base securely supporting said vessel in a second operative position wherein said liquid is dispensed from said first means to said second means; and
means including a fulcrum adjacent said base and said auxiliary base for selectively rocking said vessel into either of said operative positions.

4,297,763
FURNITURE HINGE
Reinhard Lautenschläger, Reinheim, Fed. Rep. of Germany, assignor to Karl Lautenschlager KG, Reinheim, Fed. Rep. of Germany
Filed Nov. 28, 1979, Ser. No. 98,044
Claims priority, application Fed. Rep. of Germany, Feb. 12, 1978, 2852229
Int. Cl.³ E05D *3/06, 3/10, 15/52, 15/54*
U.S. Cl. 16—164 **6 Claims**

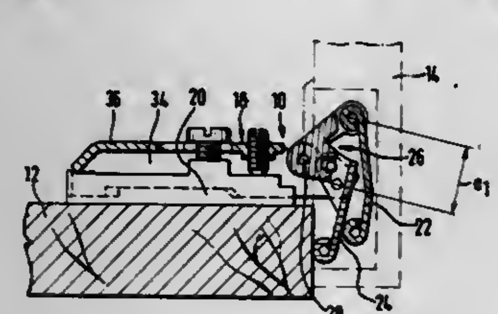

1. A hinge for pivotably linking a door leaf or lid to a carcass of a furniture piece, said hinge having a door-related part attachable to the door leaf or lid, and a supporting-wall-related part attachable to said carcass, first and second hinge links both pivotingly attached to the door-related part and pivotingly joining said parts together in the manner of a four-joint hinge so that the same is movable from a hinge-open to a hinge-closed position and vice versa, said first link being farther from the supporting wall-related part than said second link and being linked to a pivot piece so as to be pivotable about a first pivot axis, said pivot piece being pivotingly linked to the supporting wall-related part so as to be pivotable about a second pivot axis, said second hinge link being pivotably linked to said supporting wall-related part at a third pivot axis and said pivot piece being coupled operatively to said second hinge link such that said first pivot axis of said first hinge link has in said hinge-open position a minimum distance and in said hinge-closed position a maximum distance from said third pivot axis.

4,297,764
METHOD AND INSTALLATION FOR PROCESSING BOVINE FEET
Clande Tournier, Lioujas, 12000 Rodez, France
Filed Nov. 19, 1979, Ser. No. 95,247
Claims priority, application France, Apr. 12, 1978, 78 34720; Apr. 12, 1978, 78 34721; May 30, 1979, 79 13786
Int. Cl.³ A22B *5/08;* **A22C** *17/04*
U.S. Cl. 17—46 **25 Claims**

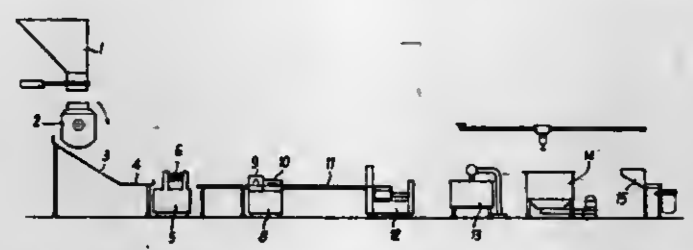

1. In a method of processing bovine feet comprising the steps of washing, dehoofing, scalding, depilating and boning the feet, the improvement wherein said boning step is carried out before said scalding step to obtain a flesh portion separate from a bone portion, said scalding and depilating steps then being carried out on said flesh portion.

4,297,765
FISH SCALER WITH WATER HANDLE
Wilbur E. Altman, and William C. McQuay, both of Charlotte, N.C., assignors to Wilbur E. Altman, Charlotte, N.C.
Filed Mar. 17, 1980, Ser. No. 131,233
Int. Cl.³ A22C *25/02*
U.S. Cl. 17—66 **7 Claims**

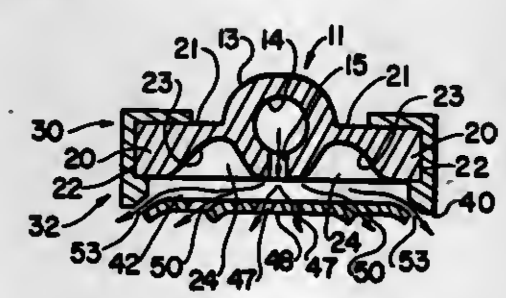

1. A fish scaler comprising a bottom wall having a longitudinal axis and plurality of transversely spaced openings through the bottom wall on both sides of the longitudinal axis and parallel thereto, an imperforate baffle extending along the longitudinal axis, the marginal edges of the openings including serrations on both sides of the longitudinal axis, imperforate sidewalls extending from the bottom wall, and means directing water against the baffle whereby the water is diverted laterally about the serrations and outwardly through the openings.

4,297,766
METHOD AND APPARATUS FOR FORMING FIBER MIXTURES
Hermann Trützschler, Monchen-Gladbach, Fed. Rep. of Germany, assignor to Trützschler GmbH & Co. KG, Mönchen-Gladbach, Fed. Rep. of Germany
Filed Jul. 20, 1979, Ser. No. 59,205
Claims priority, application Fed. Rep. of Germany, Jul. 21, 1978, 2832085
Int. Cl.³ D01G *7/08, 13/00*
U.S. Cl. 19—80 R **17 Claims**

1. In a method of forming fiber mixtures from different kinds of fiber, including the step of removing the fiber in a plurality of passes from a plurality of stored fiber lots containing the different kinds of fiber, wherein during each pass fiber is removed from consecutive stored fiber lots in partial quantities that are small relative to the entire fiber quantities in the stored fiber lots; the improvement comprising the following steps:
(a) separately determining, prior to fiber removal in the first pass, the entire fiber quantity in each stored fiber lot;

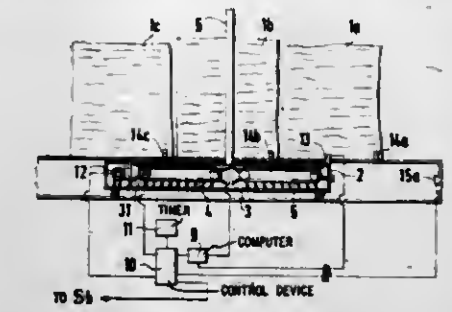

(b) separately determining for each stored fiber lot, prior to fiber removal in the first pass, a partial quantity to be removed from each stored fiber lot during the first pass, each said partial quantity representing a proportion of the entire fiber quantity of the respective stored fiber lot; and
(c) removing, at least during the first pass, the determined partial quantity from the respective stored fiber lot.

4,297,767
APPARATUS FOR OPENING TEXTILE FIBER BALES
Ferdinand Leifeld, Kempen, Fed. Rep. of Germany, assignor to Trützschler GmbH & Co. KG, Monchen-Gladbach, Fed. Rep. of Germany
Filed Oct. 26, 1979, Ser. No. 88,573
Claims priority, application Fed. Rep. of Germany, Nov. 2, 1978, 2847461
Int. Cl.³ D01C *7/04, 7/06*
U.S. Cl. 19—80 R **22 Claims**

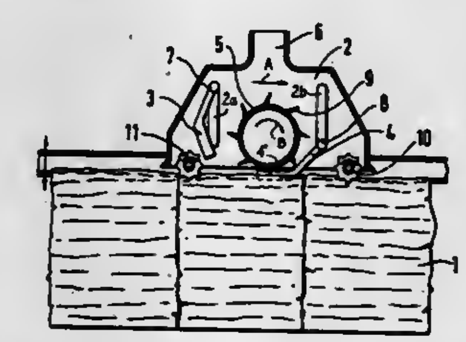

1. In an apparatus for opening textile fiber bales, including a bale opening arrangement adapted to travel parallel to the length of the apparatus along serially arranged fiber bales; the bale opening arrangement including a bale opening member having a plurality of opening elements for penetrating, in an opening zone, into the fiber material of the bales at an upper face thereof and a grate means formed of parallel-spaced grate bars for engaging, in an operative position of the grate means, the upper face of the bales; the opening elements of the opening member projecting in between adjoining grate bars in the opening zone; the improvement wherein said grate bars, when viewed in said operative position, terminate in a free end in said opening zone.

4,297,768
CARDING PLATE
Walter Löffler, Neubulach, Fed. Rep. of Germany, assignor to Hollingsworth GmbH, Neubulach, Fed. Rep. of Germany
Filed Oct. 17, 1979, Ser. No. 85,810
Claims priority, application Fed. Rep. of Germany, Oct. 23, 1978, 2846110
Int. Cl.³ D01G *15/24, 15/84*
U.S. Cl. 19—113 **13 Claims**

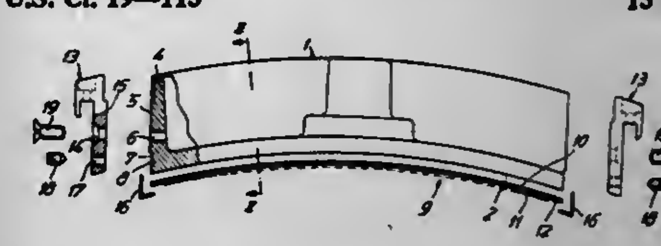

1. A carding plate comprising: a support with a base plate and a concave supporting surface forming part of a hollow cylinder; sawtooth wire sections supported adjacent one another on said supporting surface as the card clothing; a substantially thin flexible holding plate attached to said sawtooth wire sections; a carding element formed by said sawtooth wire sections and said holding plate and being secured to said supporting surface of said base plate; said holding plate being held in intimate contact with said base plate by exerting pressure on opposite edges of said flexible holding plate, said supporting surface having a cylindrical curvature causing pressure exerted in a circumferential direction of said holding plate to generate a reactive force in a radial direction between said supporting surface and said holding plate.

4,297,769
LOCKING STAND OFF
Ronald A. Coules, Barrington, Ill., assignor to Unarco Industries, Inc., Chicago, Ill.
Filed Dec. 26, 1979, Ser. No. 107,498
Int. Cl.³ A44R *21/00;* **F16B** *19/00*
U.S. Cl. 174—138 D **6 Claims**

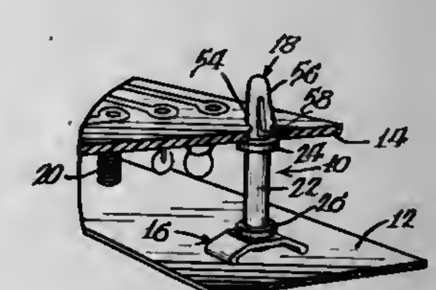

1. A fastener for maintaining a pair of apertured panels in spaced-apart relation, comprising:
an upstanding elongated post having a top end and a bottom end,
means extending upwardly from the top end of said post that is receivable in an aperture in one of said panels for securing said fastener to said one panel,
a stem having a generally vertical axis and extending downwardly from said bottom end of said post and adapted to be projected through an aperture in the other of said panels, said stem comprising a pair of diametrically opposed generally flat wall means extending radially outwardly from said axis and having a cross-sectional dimension, in a plane parallel to a plane through said other panel, that is no greater than the diameter of said aperture in said other panel, said flat wall means each terminating in a free edge parallel with the free edge of the other wall means and with the axis of said stem,
means projecting outwardly from said stem and adapted to engage the bottom surface of said other panel to prevent removal of said fastener from said other panel,

resiliently yieldable arm means adapted to bear against the upper surface of said other panel, said arm means being integral with at least one of said post and said stem, and merging therewith at a location spaced above said projecting means by a predetermined distance greater than the thickness of said other panel, and

a pair of flat diametrically opposed generally planar flange means extending downwardly from said arm means and radially outwardly from said axis, and having a cross-sectional dimension, in a plane parallel to a plane through said other panel, that is no greater than the diameter of said aperture in said other panel, said flat flange means each terminating in a free edge parallel with the free edge of the other flange means and with the axis of said stem,

whereby the free edges of said flat wall means and said flat flange means are adapted to be positioned closely adjacent to the wall of said other panel that defines said aperture and are together adapted to engage the wall of said other panel at four spaced apart locations that are about equally spaced from one another and are positioned radially outwardly from said axis, thereby to minimize rocking movement of said fastener when positioned in said aperture in said other panel.

4,297,770

SLIDE FASTENER AND METHOD OF MAKING SAME

Helmut Walz, Birmensdorf, Fed. Rep. of Germany, assignor to Optilon W. Erich Heilmann GmbH, Cham, Switzerland

Filed Jul. 10, 1979, Ser. No. 56,394

Claims priority, application Fed. Rep. of Germany, Jul. 12, 1978, 2830520; Jul. 12, 1978, 2830521; Jul. 12, 1978, 2830530

Int. Cl.³ A44B *19/34*

U.S. Cl. 24—205.16 R **17 Claims**

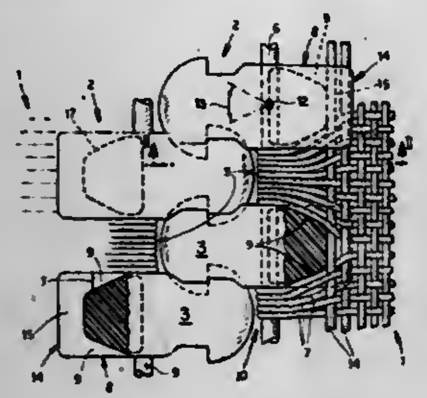

1. A slide fastener comprising a pair of woven support tapes having juxtaposed edges, respective rows of coupling elements affixed to said edges and spaced apart therealong, the coupling elements of one row being interdigitatable with the coupling elements of the other row, each of said coupling elements having a head engageable between two coupling elements of the other row and a pair of arms reaching back toward the respective tape and joined together in a weld zone at the respective tape, and a respective continuous support extending along each row and engaged by the coupling elements thereof, each of said tapes having weft yarns extending over the respective support between the coupling elements, each of said coupling elements being formed with lateral grooves with a depth increasing toward the respective tape and receiving said weft yarn.

4,297,771

PIVOTING FOOT CLAMP AND MOUNTING FRAME

Ronald B. Anderson, Plymouth; Clifford Caneer, Jr., Anoka, and Terrance C. Maki, Coon Rapids, all of Minn., assignors to Longyear Company, Minneapolis, Minn.

Filed Jan. 14, 1979, Ser. No. 48,488

Int. Cl.³ A44B *21/00*; E21B *19/07*

U.S. Cl. 24—263 DA **12 Claims**

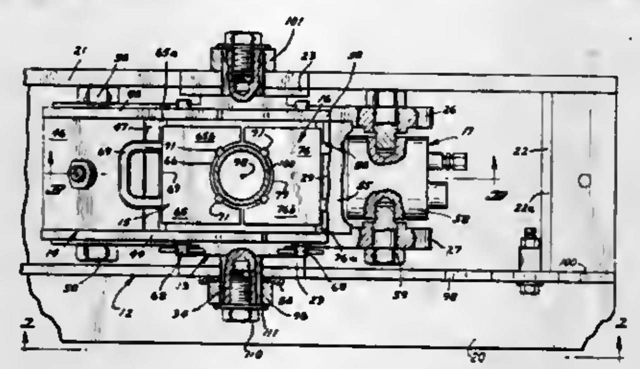

1. Apparatus for clampingly holding a rod having a central axis of elongation, comprising a base, a first and a second jaw means for cooperatively clampingly engaging a rod, a jaw holder mounting the jaw means for movement between a rod clamping position adjacent the rod axis and a rod release position more remotely spaced from the rod axis and one another and also remotely spaced along said axis from the rod clamping position, power operated means mounted on the jaw holder and connected to the jaw means for moving the jaw means between the rod release position and the rod clamping position, and oppositely disposed trunnions joined to the jaw holder for mounting the jaw holder on the base for pivotal movement about a pivot axis that passes through the central axis and is perpendicular thereto.

4,297,772

AUTOMATIC COVER FOR YARN BULKING JET APPARATUS

John S. Seney, Seaford, Del., assignor to E. I. Du Pont de Nemours and Company, Wilmington, Del.

Filed May 21, 1980, Ser. No. 151,898

Int. Cl.³ D02G *1/16*

U.S. Cl. 28—257 **4 Claims**

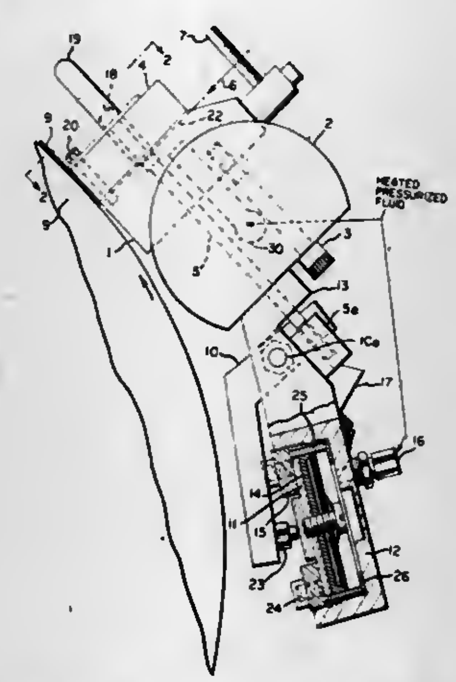

1. In a yarn-treating jet apparatus, including a jet body, a cover for said body, and means for positioning said body and said cover with respect to one another alternatively in a contiguous operative closed position and in a spaced-apart inoperative open position, said body and cover when in closed position together forming a longitudinal passage between them through which yarn can be passed for treatment, at least one conduit in communication with said yarn passage for directing fluid against the yarn while in said passage, and a pressurized fluid supply connected to said conduit, the improvement in said means for positioning said body and cover comprising a longitudinally movable actuating rod having a head end fastened to said cover, an opening extending entirely through said body from front to back at a location remote from said conduit and said yarn passage, said rod projecting substantially perpendicularly from the body-contacting side of said cover in alignment with and freely passing through said opening in said body, said rod having another end protruding beyond said body from said opening, said protruding end being operatively connected to spring powered first moving means for continuously exerting a longitudinal force on said rod for moving said cover into said open position in the absence of any counterforce, said protruding end also being operatively connected to a second moving means for exerting a greater longitudinal force on said rod for moving and holding said cover in said closed position by overcoming said first moving means and means for pneumatically powering said second moving means with fluid from said pressurized fluid supply.

4,297,773

METHOD OF MANUFACTURING A MONOLITHIC CERAMIC CAPACITOR

John L. Galvagni, Solana Beach, Calif., assignor to AVX Corporation, Great Neck, N.Y.

Division of Ser. No. 961,247, Nov. 16, 1978. This application Mar. 20, 1980, Ser. No. 132,083

Int. Cl.³ H01G *4/30*

U.S. Cl. 29—25.42 **3 Claims**

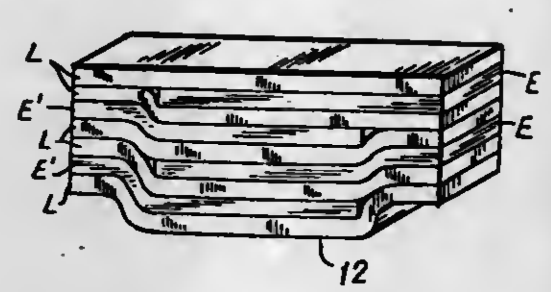

1. A method of manufacturing a monolithic ceramic capacitor device which includes a central area having internal partially overlapping electrodes of opposite polarity contained in a ceramic body forming a dielectric separator for said electrodes, said electrodes including outer end portions disposed at opposite ends of said body in contact with termination portions, said capacitor including a margin portion between said central area and each of said termination portions, said capacitor including a bottom surface for positioning adjacent a substrate, comprising the steps of:

aligning the outer end portions of first ones of said electrodes to define a first coextensive end at one end of the ceramic body, each of said first electrodes terminating short of the other end of the ceramic body;

aligning the outer end portions of second ones of said electrodes to define a second coextensive end at the opposite end of the ceramic body, said second electrodes interposing between said first electrodes, each of said second electrodes terminating short of the first coextensive end at the one end of the ceramic body;

interposing layers of ceramic between each of said first and second electrodes, thereby defining a series of aligned spaces inward of each of the opposed coextensive ends in the respective margin portions, the arrangement of said electrodes and ceramic layers forming a capacitor subassembly;

applying to said sub-assembly compressive forces exerted in a direction normal to the orientation of said electrodes to deform selective ones of said electrodes and ceramic layers into said spaces and to form indentations in said bottom surface, said indentations being in registry with the margin portions and extending to said ends, whereby a portion of said bottom surface between said indentations is at a level below the level of said indentations; and

completing the cure of said ceramic body, and applying conductive coating at the opposed ends to form said termination portions.

4,297,774

METHOD FOR MODIFYING A FLUID FUEL METERING JET ORIFICE

Alfred A. Medlock, P.O. Box 627, Ocean Springs, Miss. 39564

Filed Sep. 26, 1979, Ser. No. 79,309

Int. Cl.³ B23P *15/16*, *6/00*

U.S. Cl. 29—157 C **2 Claims**

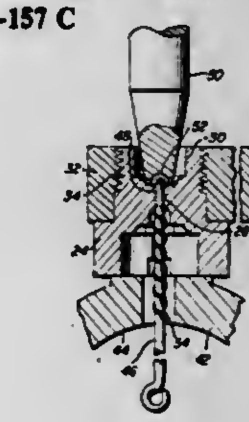

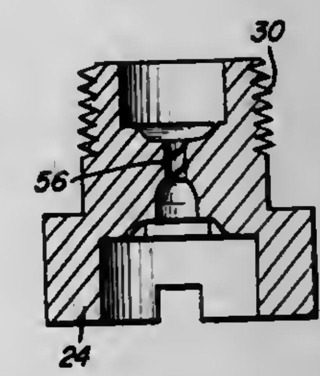

1. A method of modifying a liquid fuel carburetor metering jet orifice for fuel economy purposes and wherein the jet is constructed of a soft malleable metal such as brass and the orifice therethrough is longitudinally straight and includes inlet and outlet end portions, said method comprising:

(a) ascertaining at least the approximate diameter of said orifice;

(b) providing a single rod having a nonthreaded gauge pin portion and a low pitch screw threaded portion;

(c) placing said cylindrical gauge pin portion of a preselected size smaller in diameter than said orifice through the latter;

(d) applying a controlled sharp impact force to said jet throughout a circular zone generally concentric with said orifice on the surface of said jet through which the outlet end portion of said orifice opens and in a direction substantially paralleling the center line of said orifice, whereby to collapse those portions of said jet defining said outlet end portion of said orifice tightly about the adjacent portions of said gauge pin portion; and

(d) threading a low pitch screw threaded pin portion through said collapsed orifice end portion from the inlet end of said orifice, wherein the minor and major diameters of the threads on the last mentioned pin portion are less and greater than, respectively, the diameter of the collapsed orifice end portion.

4,297,775
METHOD FOR JOINING TWO PLATE TYPE HEAT EXCHANGER CORE SECTIONS WITH AN INTERMODULAR LAYER FOR IMPROVED HEAT TRANSFER
Alan G. Butt, La Crosse, and Abe G. Whitehead, Onalaska, both of Wis., assignors to The Trane Company, La Cross, Wis.
Filed May 8, 1980, Ser. No. 147,776
Int. Cl.³ B23P *15/26*
U.S. Cl. 29—157.3 R 14 Claims

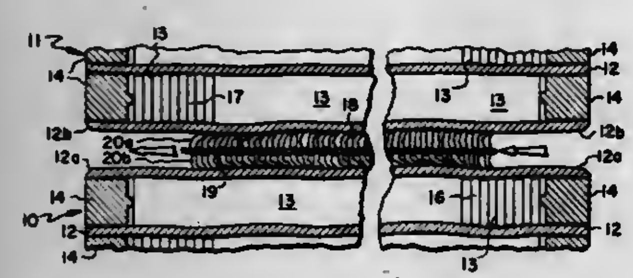

1. A method for joining together, in intimate heat transfer relationship, two plate type heat exchanger core sections previously brazed individually in the aggregate, wherein the surfaces to be joined are matched in size, comprising the steps of

a. positioning a plurality of deformable metallic members between and substantially covering said surfaces to be joined, at least one of said surfaces being non-planar as a result of said brazing in the aggregate;
b. compressig the deformable metallic members between said surfaces to be joined;
c. subjecting the deformable metallic members to a shear force causing them to deform by bending, thereby reducing the separation between said surfaces and substantially increasing the area over which the deformed metallic members and said surfaces are in contact, whereby heat transfer between the two heat exchanger core sections through the deformed metallic members is greatly improved; and
d. connecting the perimeters of said surfaces of the heat exchanger core sections together in a manner which generally circumscribes the deformed metallic members, and maintains their contact with said surfaces.

4,297,776
LEAF SPRING PULLER FOR NUCLEAR FUEL RODS
James L. Fogg, Columbia, S.C., assignor to Westinghouse Electric Corp., Pittsburgh, Pa.
Filed Apr. 9, 1979, Ser. No. 28,140
Int. Cl.³ B23P *19/04*
U.S. Cl. 29—252 6 Claims

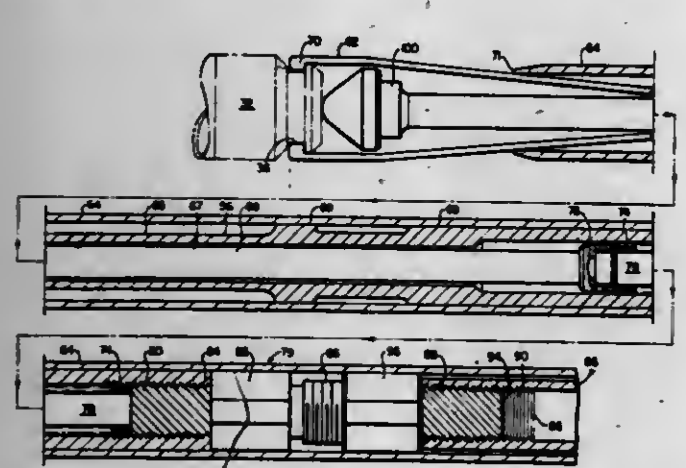

1. Apparatus for pulling a fuel rod from a storage container into grids of a nuclear reactor fuel assembly comprising:
a movable rod puller connected to means for longitudinally moving said puller toward the end of a stored fuel rod an end plug sealed in one end of said fuel rod and the axis of said rod being coextensive with the axis of said rod puller;
said rod puller comprising a hollow rod having integrally formed flexible spring members on one end thereof, said spring members being circumferentially spaced from one another;
projections on the end of said spring members, said projections having a configuration complementary to a groove formed in the end of said fuel rod end plug;
means on said rod puller constructed and arranged to coact with said flexible spring members to cause said projections to engage the groove on said end plug;
said rod puller having an outer diameter no greater than the outer diameter of the fuel rod when said projections are latched in the groove of said end plug to thereby permit pulling said fuel rod into a fuel assembly grid; and
axially adjustable means on said rod puller arranged to adjust the position of said projections relative to said groove to ensure latching of the spring members in the end plug groove;
whereby as said projections grasp said end plug, activation of said means connected to the rod puller causes it to pull the fuel rod out of said storage container and into said fuel assembly grids.

4,297,777
METHOD FOR THE PRODUCTION OF A COMPOSITE HOLLOW BODY
Jean-Claude Kucza, St. Egreve; Albert Mastrot, St. Martin le Vinoux; Rene Perrot, Issoire, and Jean-Mary Wattier, Montreuil Juigne, all of France, assignors to Cegedur Societe de Transformation de l'Aluminium Pechiney, Paris, France
Filed May 6, 1980, Ser. No. 147,228
Claims priority, application France, May 16, 1979, 79 13289
Int. Cl.³ B22F *3/24*
U.S. Cl. 29—420 7 Claims

1. A method for the production of a composite hollow body, comprising the steps of:
forming a hollow cylinder by extruding a mixture of metallic particles of a hypereutectic silicon alloy and an addition product;
forming a hollow billet by casting an aluminum alloy, the billet having a bore of a size adequate to receive the hollow cylinder thereinto;
inserting the hollow cylinder into the hollow billet; and
co-extruding the cylinder and billet together to form the composite hollow body.

4,297,778
METHOD AND APPARATUS FOR REMOVING LINERS FROM METAL CLOSURES
Earl E. Rumberger, Pittsburgh, Pa., and Frank M. Kelly, Richmond, Ind., assignors to Aluminum Company of America, Pittsburgh, Pa.
Filed Apr. 28, 1980, Ser. No. 144,342
Int. Cl.³ B23P *19/04;* B21D *22/20*
U.S. Cl. 29—426.4 16 Claims

12. Apparatus for separating a liner from a metal closure having a cylindrical skirt and a top end wall having an exterior

surface and an interior surface against which a liner is disposed, comprising:
a die having a circular opening therein;

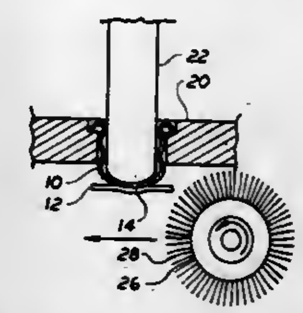

a punch, coaxially aligned with the die opening, disposed above said die and the closure supported and retained thereon; and
a separating means disposed below said die and adjacent to the opening for separating the liner from the closure.

4,297,779
METHOD OF JOINING STRUCTURAL ELEMENTS
Keith Melton, Busslingen; Olivier Mercier, Ennetbaden, and Peter Taiana, Nenenhof, all of Switzerland, assignors to BBC Brown, Boveri & Company, Limited, Baden, Switzerland
Filed Aug. 10, 1979, Ser. No. 65,568
Claims priority, application Switzerland, Aug. 10, 1978, 8507/78; Aug. 10, 1978, 8509/78
Int. Cl.³ B23P *11/02*
U.S. Cl. 29—446 16 Claims

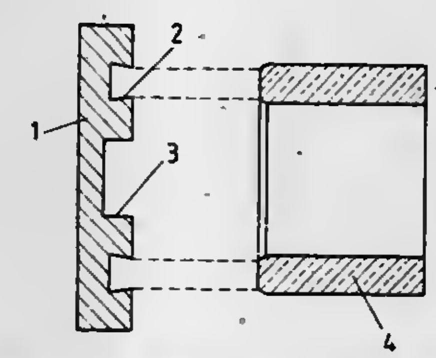

1. A process for the manufacture of a solid and tight join between components using first and second joining elements which comprises:
forming at least one annular dove-tail groove in said first joining element, said first joining element comprising a heat releasable, metallic, shape memory effect alloy;
pressing said second joining element into said at least one annular groove of said first joining element; and
shrinking by heating said first joining element so as to form said solid and tight join due to shape memory effect of said at least one groove of said metallic, shape memory effect alloy.

4,297,780
METHOD FOR CONNECTING SEWER PIPES TO MANHOLES OR OTHER PIPES
Lowell D. Temple, 5235 Sherrill Dr., Fort Wayne, Ind. 46806
Filed Dec. 17, 1979, Ser. No. 104,130
Int. Cl.³ B23P *11/02*
U.S. Cl. 29—451 12 Claims

9. The method of connecting a gasket to a pipe, manhole, or the like having a wall with an inner surface and an outer surface and an opening extending therethrough comprising:
providing an elastomeric gasket assembly comprising a gasket, one end of which is annular and has an outer diameter larger than the inner diameter of the manhole or pipe opening, and an annular substantially rigid ring received in the annular end of the gasket member,
positioning the annular end of the assembly over the opening adjacent one of the inner and outer surfaces,
pulling the gasket assembly into the opening by means of an element extending through the gasket and opening and

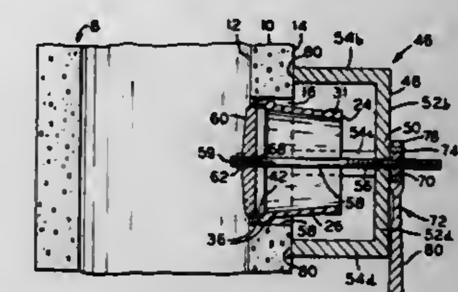

engaging the annular end of the gasket assembly, wherein when the element is pulled, the gasket assembly is pulled into the opening by it, and the gasket annular end is tightly compressed between the opening and ring.

4,297,781
METHOD OF ALIGNING A PRECISION GRINDING WHEEL ASSEMBLY
Douglas J. Hennenfent, Minneapolis; Robert A. Johnson, Minnetonka, and Allan L. Holmstrand, Bloomington, all of Minn., assignors to Magnetic Peripherals Inc., Minneapolis, Minn.
Division of Ser. No. 927,321, Jul. 24, 1978, Pat. No. 4,236,355. This application Jul. 21, 1980, Ser. No. 170,383
Int. Cl.³ B23Q *3/00*
U.S. Cl. 29—467 2 Claims

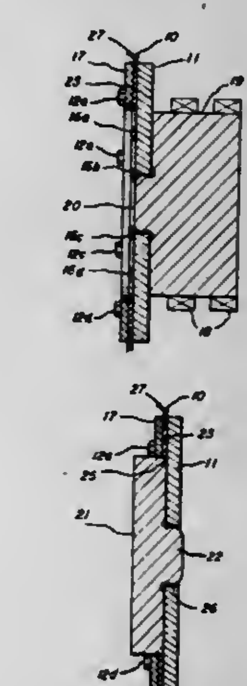

1. A method of assembling a grinding wheel mount assembly to be fastened to a faceplate carried on the end of a spindle mounted for rotation, said faceplate including a centering feature precisely centered on the spindle's axis of rotation, and a plurality of holes surrounding the centering projection for attachment of the assembly, wherein the assembly comprises:
a flexible grinding wheel having an annular hub having a plurality of axially directed spaced apart holes therein, and an annular ring of abrasive disposed about the rim of the hub and firmly bonded thereto, said wheel having sides parallel to each other;
a clamping plate in the shape of annular ring whose interior opening is at least the same size as the hub's central opening, having an external diameter at least that of the hub's outer diameter, having a plurality of axially directed holes substantially the size of those in the hub passing between the two faces of the plate and spaced to conjoin with those in the hub when properly oriented therewith, and having a flat side perpendicular to the axis;

a mounting disc having (i) substantially flat parallel faces, (ii) a centrally located centering feature on at least one side thereof shaped to closely mate with the faceplate's centering feature to prevent relative radial movement between the mounting plate and the faceplate when so mated, (iii) a plurality of axially directed holes located to conjoin with the faceplate's attachment holes when so mated to permit fasteners to pass therethrough to fasten the assembly to the faceplate, and a plurality of holes located to conjoin with the holes in the hub when the hub is properly oriented therewith; and

a plurality of cylinder type fasteners passing sequentially through first the clamping plate and then the hub into the mounting disc to firmly clamp the grinding wheel between the clamping plate and the mounting disc concentrically with both;

said method comprising the steps of:

(a) slipping the portion of a plug having a first radius substantially equal to that of the grinding wheel hub's inside radius into the hole of the grinding wheel's hub;
(b) mating the mounting disc's centering feature with a mounting feature identical to the faceplate's mounting feature and precisely concentric with and carried adjacent to the plug's portion having the first radius; and
(c) while maintaining said position of the plug vis-a-vis the hub and mounting disc, using the fasteners, fastening the mounting disc to the clamping plate and grinding wheel.

4,297,782
METHOD OF MANUFACTURING SEMICONDUCTOR DEVICES
Takashi Ito, Kawasaki, Japan, assignor to Fujitsu Limited, Kawasaki, Japan
Continuation of Ser. No. 851,766, Nov. 15, 1977, abandoned. This application Jan. 2, 1980, Ser. No. 109,100
Claims priority, application Japan, Nov. 27, 1976, 51/142527; Jul. 6, 1977, 52/80846; Jul. 6, 1977, 52/80847; Jul. 6, 1977, 52/80848; Jul. 6, 1977, 52/80850
Int. Cl.³ H01L *21/425, 21/263*
U.S. Cl. 29—571 **18 Claims**

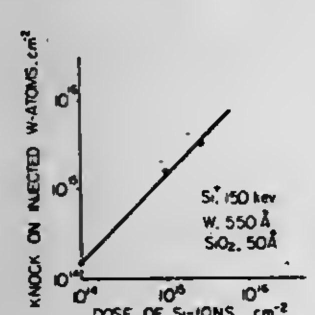

1. A method of adjusting at least one inversion threshold voltage at the surface of a semiconducting portion of a semiconductor device during the manufacture of said device, said adjusting method comprising
forming a first insulative film on said surface of said semiconducting portion,
forming a thin metallic film on said first insulative film,
bombarding said thin metallic film with an ion beam to partially inject said thin metallic film into said first insulative film to produce negative fixed charges in said first insulative film,
removing said thin metallic film, and
forming a second insulative film on said first insulative film.

4,297,783
METHOD OF FABRICATING GAAS DEVICES UTILIZING A SEMI-INSULATING LAYER OF ALGAAS IN COMBINATION WITH AN OVERLYING MASKING LAYER
Horace C. Casey, Jr.; Alfred Y. Cho, both of Summit, and Philip W. Foy, Plainfield, all of N.J., assignors to Bell Telephone Laboratories, Incorporated, Murray Hill, N.J.
Division of Ser. No. 7,790, Jan. 30, 1979, Pat. No. 4,231,050. This application Apr. 21, 1980, Ser. No. 142,076
Int. Cl.³ H01L *21/203, 21/223*
U.S. Cl. 29—578 **9 Claims**

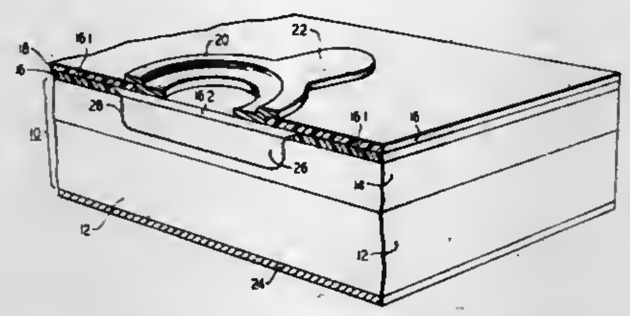

1. A method of fabricating a GaAs device having reduced surface recombination current comprising the steps of:
(a) growing by molecular beam epitaxy a monocrystalline, semi-insulating layer (16) of AlGaAs on a major surface of a monocrystalline body of GaAs (10), CHARACTERIZED BY
(b) forming a masking layer (18) on said AlGaAs layer,
(c) opening a window in said masking layer so as to expose the underlying portion (16.2) of said AlGaAs layer but leave adjacent peripheral portions of said AlGaAs layer covered by said masking layer,
(d) introducing impurities through said window so as to modify the conductivity of the underlying zone (26) of said GaAs body and to convert said underlying portion (16.2) of said AlGaAs layer from semi-insulating to low resistivity while leaving said adjacent peripheral portions (16.1) semi-insulating, and
(e) forming electrical contacts (20,24) to said underlying portion (16.2) of said AlGaAs layer and to an opposite major surface of said body.

4,297,784
METHOD FOR MOUNTING MOTOR STATORS
Selmer Vagman, Emmaboda, Sweden, assignor to ITT Industries, Inc., New York, N.Y.
Filed Nov. 26, 1979, Ser. No. 97,611
Claims priority, application Sweden, Dec. 12, 1978, 7812730
Int. Cl.³ H02K *15/14*
U.S. Cl. 29—596 **5 Claims**

1. A method for mounting a complete motor stator in a surrounding cylindrical housing, comprising the steps of:
sliding the stator on top of a flanged mandrel, the rib diameter of which corresponds to the inner diameter of the stator and the flange diameter approximately corresponds with the outer diameter of the stator to form a first bearing guide for the stator housing;
sliding a second mandrel into a guiding portion of the first mandrel so that the first and second mandrels form a concentric mandrel unit having a space in which the coils of the stator are disposed, an outer diameter of the second mandrel forming a second bearing guide for the stator housing;
heating a cylindrical stator housing, the nominal inner diameter of which is somewhat less than the outer diameters of the stator and first and second mandrels to expand said housing;
sliding the heated and expanded housing over the mandrel unit;
cooling said housing whereby the housing is shrunk-fit around the mandrel unit and stator; and

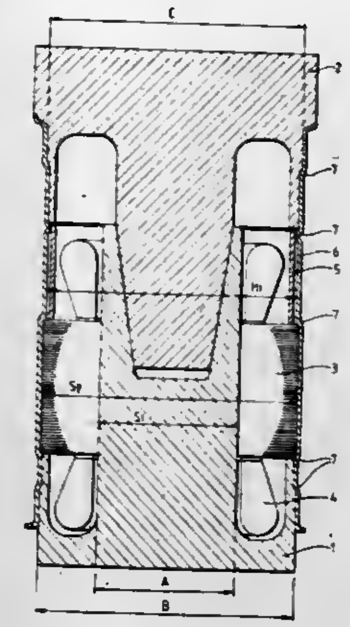

loosening and removing said mandrels from the stator housing.

4,297,785
ELECTRIC STARTING AIDS FOR INTERNAL COMBUSTION ENGINES
Richard P. Knowles, Farnborough, England, assignor to Lucas Industries Limited, Birmingham, England
Filed Jan. 23, 1980, Ser. No. 114,589
Claims priority, application United Kingdom, Feb. 24, 1979, 6630/79
Int. Cl.³ H05B *3/00*
U.S. Cl. 29—611 **4 Claims**

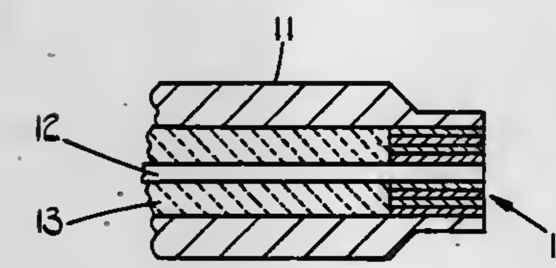

1. A method of manufacturing an electric starting aid for an internal combustion engine of the kind comprising a body adapted to be retained in a bore formed in the cylinder head of the engine, an electrically conductive tubular extension located at one end of the body, part of said extension extending in use within a combustion chamber of the engine, a central conductor rod extending through said extension, insulating means supporting said rod within the extension and a spirally wound heating element formed from metallic tape, located in the open end of said extension, said heating element being secured at its inner and outer ends to the central rod and the extension respectively, the method comprising coating the tape with a glass like substance, securing one end of the tape to the central rod and winding the tape about the central rod, inserting the wound element into the end portion of the extension, securing the rod within the extension, securing the other end of the tape to the extension, passing an electric current through the element so that the latter attains a temperature sufficient to cause softening of the glass like substance and rolling the end portion of the extension to effect a reduction in the diameter thereof.

4,297,786
CHAIN SAW NOSE GUARD
Lloyd H. Tuggle, Shreveport, La., assignor to Beaird-Poulan Division, Shreveport, La.
Division of Ser. No. 719,597, Sep. 1, 1976. This application Jan. 3, 1980, Ser. No. 155,961
Int. Cl.³ B27B *17/00*
U.S. Cl. 30—382 **4 Claims**

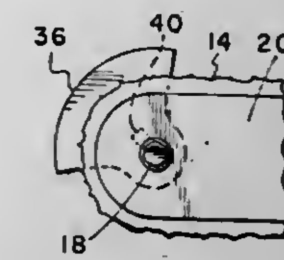

1. In a chain saw having a guide bar and a cutting chain disposed around a curved nose portion of the guide bar, the curved nose portion including a hole and a quadrant having a curved edge which spans approximately the upper one half of the arc described by the curved nose portion when the guide bar is oriented to extend in a generally horizontal direction, a guard assembly attached to said nose portion and overlying said quadrant, said guard assembly comprising a sector of a substantially circular disk which spans an arc at least as large as the span of said quadrant but less than said arc described by said nose portion, the curved edge of said sector projecting beyond the cutting path of the chain in a plane substantially parallel to the plane of said guide bar, said sector including a shaft disposed in registration with said hole, said shaft having a portion defining a locking key, and said nose portion having surfaces defining at least a portion of said hole and cooperable with surface portions on said key to provide for said sector to be disposed in locked engagement with said nose portion to prevent rotation of said sector with respect to said guide bar and to prevent the installation of said sector on said guide bar out of a major portion of said quadrant.

4,297,787
INSULATED GAUGE ROD AND METHOD OF MAKING THE SAME
Carlin P. Fischer, 6336 S. 72nd Ave., Omaha, Nebr. 68127
Filed Apr. 17, 1980, Ser. No. 141,168
Int. Cl.³ B61K *9/08;* **E01B** *35/02*
U.S. Cl. 33—144 **5 Claims**

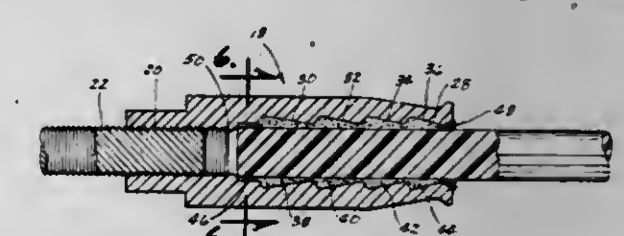

1. An insulated gauge rod, comprising,
a first metal rod portion having means on one end thereof for engagement with one railroad track of a pair of tracks,
a first metal hollow casting secured to the other end of said first metal rod portion,
a second metal rod portion having means on one end thereof for engagement with the other railroad track of the pair of tracks,
a second metal hollow casting secured to the other end of said second metal rod portion,
a fiberglass rod secured to and extending between said first and second castings for electrically insulating said first and second rod portions from each other, each of said castings having open opposite ends, one end of each of said castings being threadably secured to the associated

metal rod portion, the other end of each of said castings receiving one end of the said fiberglass rod,
an epoxy material securing said fiberglass rod to said casting, each of said castings including means for centering said fiberglass rod therein.

4,297,788
GEAR TESTING MACHINE
Armin Sterki, Uetikon, and Gerd R. Sommer, Dietikon, both of Switzerland, assignors to Maag- Zahnräder & Maschinen AG, Zürich, Switzerland
Filed Jan. 14, 1980, Ser. No. 111,769
Claims priority, application Switzerland, Jan. 19, 1979, 548/79
Int. Cl.³ G01B *5/20, 7/28*
U.S. Cl. 33—179.5 R **6 Claims**

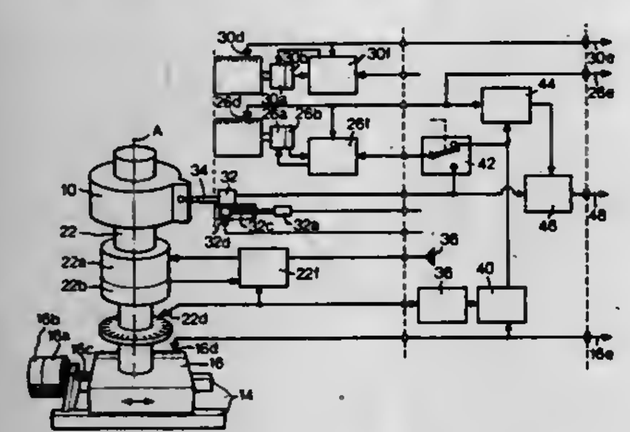

1. Gear testing machine with drive means for relative movements between a toothed gear to be tested and a sensor connected to an electronic control and evaluation device, said means comprising a rotary drive for relative rotational movements about the axis of the gear, an axial drive for rectilinear relative movements in the direction of the axis of the gear and a tangential drive for relative rectilinear movements in the direction of a tangent to the pitch circle of the gear, each of said drives comprising a servomotor and a tachogenerator providing elements of a closed loop control system, and also a position transducer, the testing machine further comprising an electronic correction circuit which compares with each other the actual position values determined by the position transducers and corrects the test signals emitted by the sensor in conformity with the position errors thereby ascertained, at least one of said drives further comprising a second closed loop control circuit which includes the servomotor of the relevant drive and the associated position transducer and to which actual position values determined by another of the said drives are arranged to be supplied as a regulating variable.

4,297,789
LENS-FREE SIGHTING DEVICE
Hideo Tominaga, Tokyo, Japan, assignor to Fontaine Industries, Inc., Garden Grove, Calif.
Filed Aug. 20, 1979, Ser. No. 67,907
Int. Cl.³ F41G *1/38*
U.S. Cl. 33—298 **8 Claims**

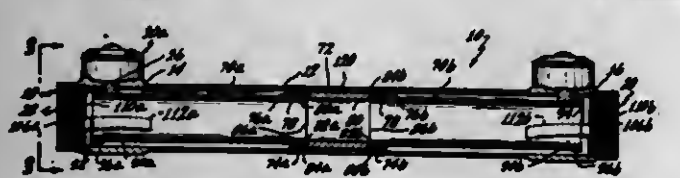

1. A lens-free sighting device which comprises:
a one-piece elongated main tube having at least one saddle integrally formed thereon and located proximal to one of the ends of said main tube, said saddle including two holes located 90 degrees apart from each other and passing through said saddle forming two accesses into the interior of said main tube;
two turret means located on said saddle, one over each of said holes such that a portion of each of said turret means pass through one of said holes into the interior of said main tube;
at least one elongated inner tube pivotally mounted within the interior of said main tube such that at least one of the ends of said inner tube is free to move within the interior of said main tube, said free end located proximal to the end of said main tube wherein said saddle is located;
said portions of said turret means passing through said holes operatively connected to said movable end of said inner tube so as to cause said movable end of said inner tube to move within the interior of said main tube in response to movement of said turret means;
a reticle means having two sections, one of said sections fixedly located on said movable end of said inner tube so as to move in response to movement of said inner tube, the other of said sections located proximal to the end of said main tube wherein said saddle is not located, said two sections of said reticle means together forming a complete reticle when viewed along the longitudinal axis of said main tube.

4,297,790
SURVEY APPARATUS AND METHOD EMPLOYING RATE-OF-TURN AND FREE GYROSCOPES
Donald H. Van Steenwyk, San Marino; John R. Cash, and Paul W. Ott, both of Pasadena, all of Calif., assignors to Applied Technologies Associates, San Marino, Calif.
Continuation-in-part of Ser. No. 925,307, Jul. 17, 1978, Pat. No. 4,192,077. This application Jun. 25, 1979, Ser. No. 51,893
The portion of the term of this patent subsequent to Mar. 11, 1997, has been disclaimed.
Int. Cl.³ E21B *47/24;* **G01C** *19/00*
U.S. Cl. 33—313 **33 Claims**

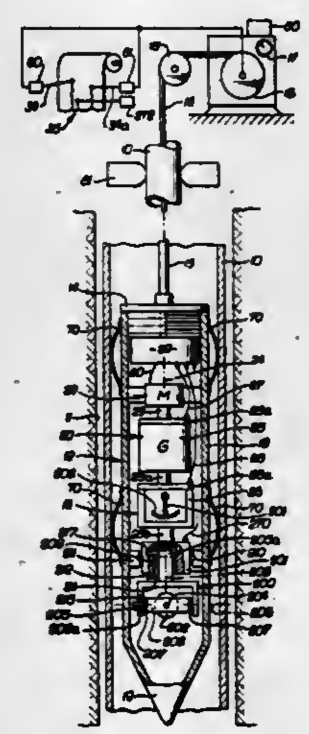

1. In apparatus for determining azimuth, the combination that comprises
(a) a rate-of-turn gyroscope including a first rotor having a spin axis,
(b) support means to support the gyroscope for lengthwise travel along another axis and to rotate about said other axis,
(c) said gyroscope having first means for producing an output which varies as a function of azimuth orientation of the gyroscope relative to the earth's spin axis, and
(d) a free gyroscope operatively carried for movement along said other axis with said rate-of-turn gyroscope, said free gyroscope including a second rotor having a spin axis subject to re-orientation,

(e) said free gyroscope also having means for producing an output which varies as a function of azimuth orientation of the free gyroscope,
(f) other means responsive to the output of the rate-of-turn gyroscope to effect said re-orientation of the free gyroscope spin axis,
(g) control means connected with said other means to periodically cause said other means to effect said alignment, while said travel is effectively interrupted, and
(h) said support means supporting both gyroscopes for travel in a bore hole.

4,297,791
HOSE WATER LEVELING INSTRUMENT
Ernst W. Meade, Akazienhain 13, 518 Eschweiler, Fed. Rep. of Germany
Continuation of Ser. No. 897,385, Apr. 18, 1978, abandoned. This application Nov. 5, 1979, Ser. No. 91,407
Claims priority, application Fed. Rep. of Germany, Apr. 19, 1977, 2717347
Int. Cl.³ G01C *9/22, 5/04*
U.S. Cl. 33—367 **5 Claims**

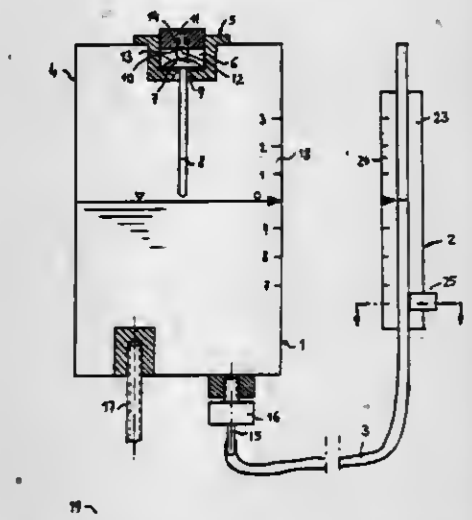

1. A hose water leveling instrument, comprising a liquid-filled hose; a fixable reference instrument, permanently filled with measuring liquid and connected to one end of said hose; a freely movable reading instrument connected to the other end of said hose; said hose connecting said reference instrument to said reading instrument; said reference instrument having a fully transparent housing for displaying the level of said measuring liquid, said housing having a plane rear side for directly contacting a mounting wall with a reference level to be transmitted, said transparent housing having a measuring scale section located next to said plane rear side and being readable from different directions, said housing having a substantially slender cylindrical shape with uniform diameter and a cross-section comprised of a substantially semi-circular area and a triangular area bounding the diameter of said semi-circular area, said diameter having a magnitude so that said housing can be easily grasped and enclosed by hand; and a single automatically opening and closing venting valve for preventing run out of said liquid and being located in said reference instrument; a valve chamber with a wall, said venting valve comprising a plane-convex body located in said valve chamber, said body on its plane surface facing said valve chamber wall and having a lever loaded with weight; said lever having a convex surface located inside said valve chamber; a ball-shaped closure member; venting aperture means with a conical valve seat; said lever in horizontal position of said reference instrument forcing said ball-shaped closure member against said valve seat and forming a linear seal when said plane-convex body due to the weight of said lever is pivoted about a fulcrum on the periphery of said plane-convex body so that a dust particle will be forced out of the contact surface between said closure member and said valve seat, said plane-convex body hanging vertically in a vertical position of said reference instrument to the weight of said body and said lever, the plane surface of said body being in full contact with said valve chamber wall without exerting force on said closure member, said closure member dropping out of said venting aperture means due to the weight of said closure member; at least said plane-convex body being comprised of magnetic material, said closure member being comprised of ferrous material.

4,297,792
MODIFIED JAR DRYER
Elton H. Harter, San Jose, Costa Rica, assignor to Gerber Products Company, Fremont, Mich.
Filed Apr. 16, 1980, Ser. No. 140,917
Int. Cl.³ F26B *3/24*
U.S. Cl. 34—12 **10 Claims**

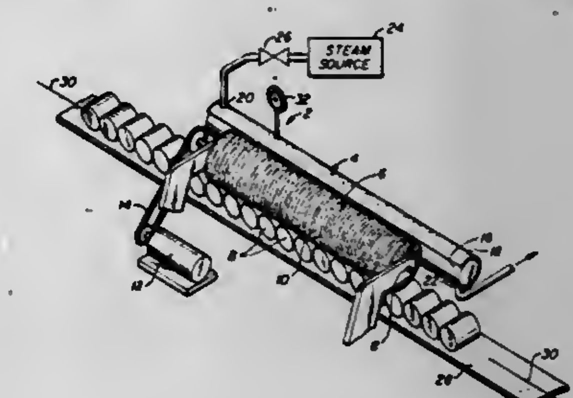

1. A dryer for drying the surface of an object comprising a brush having a plurality of bristles extending from the backbone thereof; means for spinning said brush around its backbone so that a portion of said bristles wipe across the surface of said object to remove liquid from the surface of said object, and means for directly heating at least the outer ends of said bristles as their outer ends traverse the surface of said direct heating means, said direct heating means adapted to engage said bristles so that as said bristles disengage from said surface of said direct heating means said bristles spring back, thus causing liquid to be removed from said bristles, and thereby enhancing the drying performance of said dryer.

4,297,793
APPARATUS FOR SUPPLYING MATERIALS TO BELT TYPE CONTINUOUS VACUUM DRYER
Yukihiro Saiki, Saitama; Eitaro Kumazawa, Sayama, and Yozo Ishioka, Higashikurume, all of Japan, assignors to Snow Brand Milk Products Co., Ltd., Sapporo, Japan
Filed Feb. 13, 1980, Ser. No. 120,950
Int. Cl.³ F26B *15/18*
U.S. Cl. 34—56 **5 Claims**

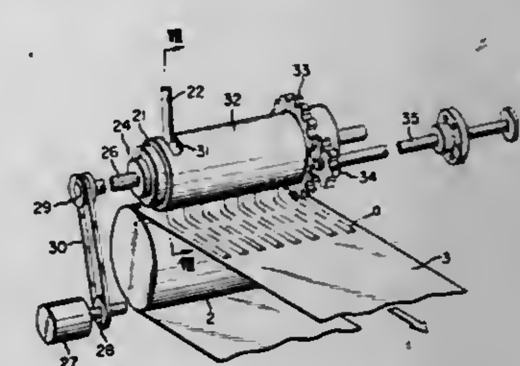

1. An apparatus provided above a movable belt inside a vacuum drying chamber and adapted for supplying material onto the belt, which comprises:
an inner cylinder equipped with a material-supplying duct for supplying material into said inner cylinder adjacent to one end thereof, a distributing chamber formed inside said

inner cylinder and communicating with said duct and a plurality of first distributing nozzles on the lower part of said inner cylinder and communicating with said distributing chamber for discharging said material from said distributing chamber;

an outer cylinder sleeved on and mounted for rotation relative to said inner cylinder, said outer cylinder having a plurality of second distributing nozzles provided at positions corresponding to the positions of said first distributing nozzles on said inner cylinder, said second distributing nozzles on said outer cylinder being adapted for cooperative registration with said first distributing nozzles on said inner cylinder to regulate the amount of material discharged from said distributing chamber;

a rotatable screw feeder inside said distributing chamber of said inner cylinder for feeding said material along said distributing chamber so that said material can be discharged through said first distributing nozzles on said inner cylinder at substantially equal linear velocities; and

a driving mechanism for rotating said outer cylinder relative to said inner cylinder whereby to regulate the amount of material discharged from said distributing chamber.

4,297,794
PAPER SHEET DRYER
Oscar Luthi, Nashua, N.H., assignor to Ingersoll-Rand Company, Woodcliff Lake, N.J.
Filed Aug. 2, 1977, Ser. No. 821,167
Int. Cl.³ F26B *11/04*
U.S. Cl. 34—122 **16 Claims**

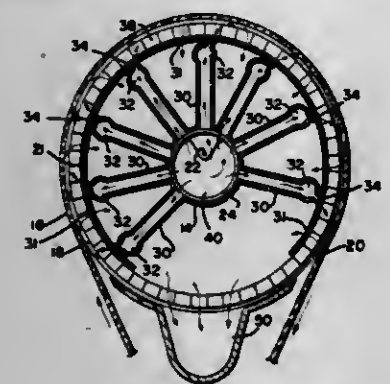

1. A dryer for drying a continuous sheet of paper fibers comprising: a rotatable drum; a high percentage open area sheet support on the outside of said drum; means for feeding the sheet to the rotatable drum and means for removing the sheet from the drum at an area circumferentially spaced from the means for feeding the sheet to the rotatable drum, thus providing a sheet-drum contact arc; means for feeding hot gas into the inside of the rotatable drum; said sheet support having means for conducting hot gas from the inside of the drum against the inside of the sheet, and along the inside surface of the sheet; and means circumferentially spaced from said sheet-drum contact arc for flowing used gas out of the rotatable drum.

4,297,795
PORTABLE DRYING RACK
Vito Licari, 875 Ocean Ave., Elberon, N.J. 07740
Filed Jun. 6, 1980, Ser. No. 157,004
Int. Cl.³ F26B *9/10*
U.S. Cl. 34—239 **7 Claims**

1. A portable drying rack of molded integral construction comprising, a pair of molded supporting members, first and second unitary frames each molded to include a pair of parallel spaced frame members and a plurality of connecting members extending transversely therebetween, integrally molded attachment means pivotally attaching said supporting members to the frame members of said first frame in parallel spaced relationship for pivotal movement between a folded and cruciform configuration, said second pivotally attached at one end between said supporting members and said first frame for bracing said supporting members and said first frame when in said cruciform configuration and collapsible therewith when in

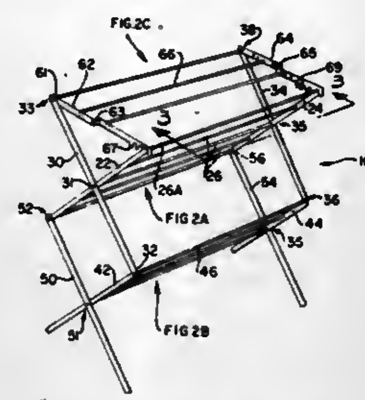

said folded position, and securing means formed at one end of said second frame for releasably securing said supporting members and said first frame in said cruciform configuration.

4,297,796
SHOE WITH THREE-DIMENSIONALLY TRANSMITTING SHOCK-ABSORBING MECHANISM
Ronald H. Stirtz, and Bill Dellinger, both of Eugene, Oreg.
Filed Jul. 23, 1979, Ser. No. 59,578
Int. Cl.³ A43B *13/18, 13/12, 13/04, 21/32*
U.S. Cl. 36—28 **3 Claims**

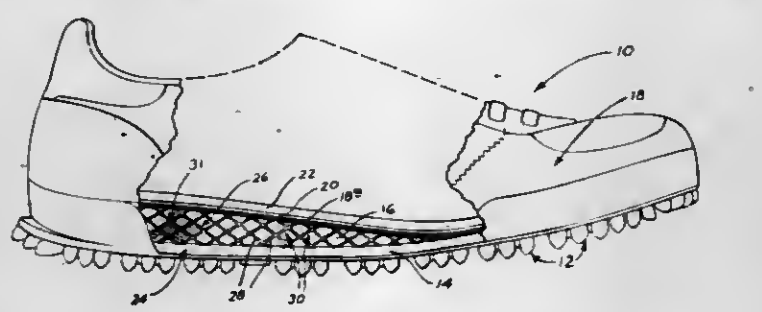

1. In an article of footwear including means defining a deformable foot-cushioning inner sole expanse portion bounded by a rim portion which is disposed at an angle relative to said expanse portion,

plural elongated stretch-resistant strands distributed over at least a part of said expanse portion and folded over at least a part of said rim portion, and

bonding means distributed over said expanse and rim portions producing force-transmission bonds between said portions and said strands along the lengths of the strands, whereby, with a wearer's foot tending to produce a localized deformation in said expanse portion, said strands distribute such deformation to other regions in said expanse portion and to regions in said rim portion through force transmission and distribution via said bonds.

4,297,797
THERAPEUTIC SHOE
Stuart R. Meyers, 2910 Wallace Ave., Bronx, N.Y. 10467
Filed Dec. 18, 1978, Ser. No. 970,010
Int. Cl.³ A43B *13/40, 13/20*
U.S. Cl. 36—44 **6 Claims**

1. A therapeutic shoe comprising an insole member being formed with a first portion comprising a fluid tight chamber at the medial portion to exert pressure on the medial portion of the foot, and a second portion comprising a plurality of fluid tight chambers being compressible at the lateral portion of the foot, and a third portion comprising a compressible metatarsal

portion, wherein the lateral and metatarsal portions are more compressible than the medial portion, whereby the weight of a

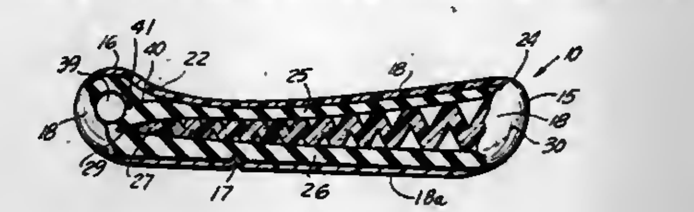

foot undergoing compression in the lateral and metatarsal portion forms a medial arch.

4,297,798
FOOTWEAR SYSTEM
Laura P. Colan, 400 E. 57th St., New York, N.Y. 10022
Filed Feb. 12, 1980, Ser. No. 120,883
Int. Cl.³ A43B *3/24, 3/12;* A43C *13/00*
U.S. Cl. 36—101 **9 Claims**

1. An improved footwear system comprising a sole assembly including a base portion defining the shape of the sole and having an outer edge perimeter wall; a stepped inset portion atop said perimeter wall along substantially the entire length of said perimeter wall defining a ledge, a vertical wall extending upward at substantially a right angle to said ledge; a ridge section, said ridge section extending outward from said vertical wall along a height substantially intermediate thereof; said ridge extending substantially parallel to said perimeter wall of said base portion and laterally inward thereof; a plurality of vertical slots extending through said ridge portion with each said slot adapted to permit said lacing material to pass therethrough; and a top portion adapted to extend substantially parallel to said bottom portion, the outer edge portion of said top portion adapted to overlie said ridge in spaced apart relationship thereto; whereby said ledge portion and its said vertical wall and said outer edge portion of said top portion define a substantially E shaped channel having a slotted central arm therein to permit the releasable affixation of shoe upper material thereto.

4,297,799
APPARATUS FOR DIGGING POST HOLES AND ERECTING POSTS
John T. Sonerud, Hudiksvall, Sweden, assignor to Soneruds Maskin Aktiebolag, Hudiksvall, Sweden
Filed Feb. 25, 1980, Ser. No. 124,640
Int. Cl.³ A01B *13/00*
U.S. Cl. 37—2 R **4 Claims**

1. Apparatus for digging post holes and erecting posts or poles, characterized by a post hole digging shovel (1) on which there is pivotably mounted gripping means (6, 7) for gripping a post and consisting of at least one gripping arm (6, 7), the shovel having a spine (1*a*) which is provided with a substan-

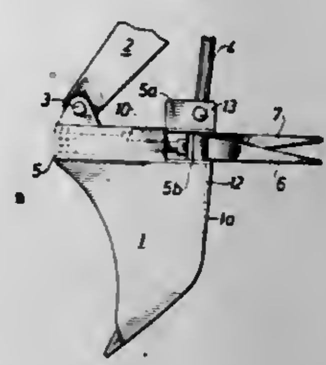

tially V- or U-shaped recess (12) forming a seat for the pole, the gripping means (6, 7) being arranged above said spine.

4,297,800
CARTRIDGE MAGAZINE FOR FIREARMS
Maxwell G. Atchisson, 55 Old Yellow Springs Rd., Fairborn, Ohio 45324
Division of Ser. No. 830,607, Sep. 6, 1977, Pat. No. 4,169,329. This application Aug. 27, 1979, Ser. No. 69,725
Int. Cl.³ F41C *25/02*
U.S. Cl. 42—49 A **4 Claims**

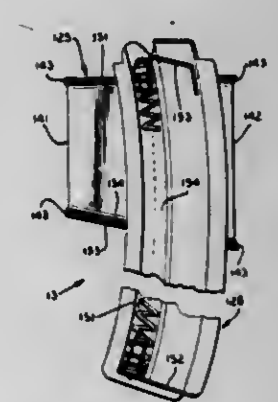

1. A cartridge magazine for use with a firearm that has a magazine receiving receptacle to accept a magazine containing cartridges of a certain caliber and that has been converted to fire cartridges of a second caliber, said cartridge magazine comprising:

a magazine housing configured to be operatively received in the magazine receptacle of the firearm;

said magazine housing comprising a flat plate which is bent along an upper pair of approximately horizontal laterally spaced apart lines and which is additionally bent along a lower pair of approximately horizontal laterally spaced apart lines so that the spacing on the plate between the upper and lower pairs of bend lines defines the sides of said magazine housing, and so that the lateral separation between bend lines of each said pair respectively defines the top surface and bottom surface of said magazine housing; and

a cartridge magazine extending through and attached to said top and bottom surfaces of said magazine housing.

4,297,801
FIREARM WITH INTERCHANGEABLE BARRELS AND AMMUNITION CYLINDERS

Harvey R. Kahn, Port Jefferson, N.Y., assignor to Alan I. Gerald Corporation, North Haven, Conn.

Continuation-in-part of Ser. No. 35,992, May 2, 1979. This application Dec. 3, 1979, Ser. No. 99,846
Int. Cl.^{3} F41C *1/00, 21/00*
U.S. Cl. 42—59 4 Claims

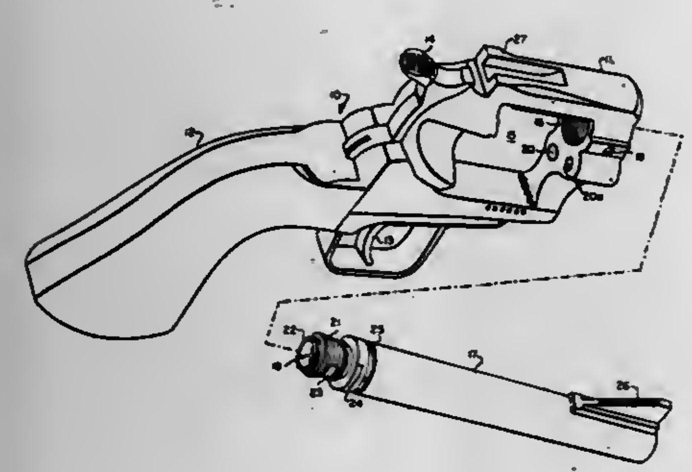

1. In a firearm of the type having a frame for mounting a multiple chamber ammunition cylinder, said frame having a rear sight mounted thereon, and a threaded frame bore for removably mounting a barrel, a plurality of said ammunition cylinders with each of said cylinders being adapted for use with a different caliber ammunition, means for selectively mounting any one of said plurality of cylinders for revolution on said frame, a plurality of barrels, each said barrel having a different diameter barrel bore therethrough corresponding to a different caliber of ammunition associated with one of said plurality of cylinders, each barrel having a thread engageable in said frame bore and located at one end of said barrel for allowing selective mounting of each said barrel in said frame bore, longitudinal barrel extension means located on said one end of each respective barrel and being operative when said respective barrel is fully threadedly engaged in said frame bore for interfering with the mounting and revolution of any said cylinder in said frame which cylinder corresponds to a caliber of ammunition larger than the caliber of the barrel bore of said respective barrel, an improvement which comprises a plurality of interacting safety features including a barrel alignment mark located adjacent each said barrel thread on each of said barrels, a frame alignment mark located on said frame for alignment with said barrel alignment marks when each said barrel is fully threadedly engaged in said threaded frame bore to insure full threaded engagement and thereby the operativeness of each said extension means, a plurality of sight ribs, each said rib corresponding to a different said barrel, means for attaching each said sight rib to its corresponding barrel at a predetermined location on each said barrel to enable each said sight rib to be operatively oriented with respect to said rear sight for aiding aiming of said firearm when each said barrel is fully threadedly engaged in said frame bore, and means for inhibiting attachment of each said sight rib to its corresponding barrel when each said corresponding barrel is only partially engaged in said frame bore for allowing attachment of each said sight rib to its corresponding barrel only after each said barrel is fully threadedly engaged in said frame bore to require that attention be directed to the degree of engagement between a said barrel and said frame bore in order to attach each said sight rib.

4,297,802
LINE ROUTING AND STORING DEVICE

Carl N. Normann, 1503 Fulton Ave., Apartment 91, Sacramento, Calif. 95825

Filed Jun. 23, 1980, Ser. No. 162,184
Int. Cl.^{3} A01K *97/00*
U.S. Cl. 43—4 3 Claims

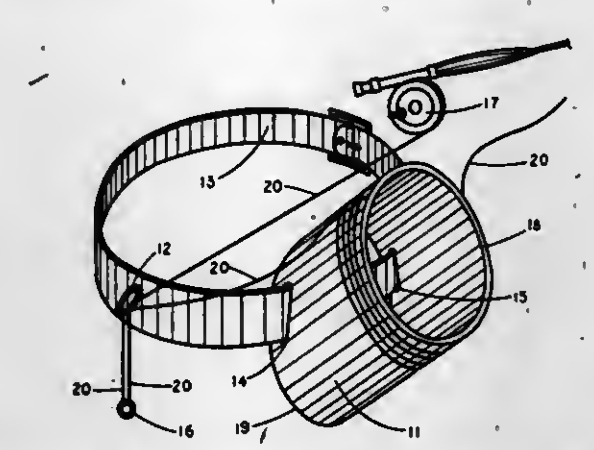

1. A line routing and storing device comprising line-guiding means, line-tensioning means, non-rotating arbor, and locating-and-fastening means for securing said line-guiding means and arbor about the waist-line of a fisherman; said arbor to be positioned and oriented so that its axis points in a suitably forward and upward direction from said waist-line; said line-guiding means and line-tensioning means to be suitably and remotely positioned from said arbor, and to be operably connected by said line between a conventional fly-reel, conventionally mounted on a fly-rod, and said arbor onto which said line is wound by hand.

4,297,803
COMPOSITION USEFUL FOR INHIBITING ADHESION AND PROPAGATION OF UNDESIRABLE ALGAE AND/OR SHELLFISH ON ARTICLES

Norio Saito, No. 1019 Shimizudani, Takatori-cho, Takaichi-gun, Nara-ken, Japan

Filed Mar. 14, 1980, Ser. No. 130,590
Claims priority, application Japan, Mar. 16, 1979, 54-31327
Int. Cl.^{3} A01K *74/00*
U.S. Cl. 43—7 14 Claims

1. A composition for inhibiting adhesion of undesirable algae and/or shellfish to and propagation thereof on articles, which composition comprises an organic solvent solution of (a) triisobutyltin hydroxide and (b) an arylsulfonic acid derivative and wherein the weight ratio of (a):(b) is from 1:1 to 1:1.5, (a) being reactive with (b) to form a water-insoluble reaction product.

4,297,804
CHUMATE

David B. Weld, 3829 Carfax Ave., Long Beach, Calif. 90808

Filed Dec. 3, 1979, Ser. No. 99,561
Int. Cl.^{3} A01K *97/04*
U.S. Cl. 43—55 5 Claims

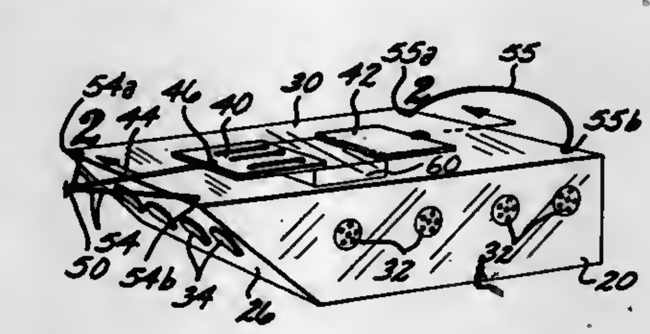

1. An aquarium-type floating bait tank including:

an enclosed boat-shaped container having oppositely disposed top and bottom walls suitable for high speed pulling, holding water and carrying live bait therein, said container being made substantially of transparent material so that bait carried within it can be seen from surrounding water when floated therein;
said enclosed container having aeration holes positioned to supply fresh air to water carried therein, a bait opening in the top wall of said container, drain holes in the bottom wall of said container and plug means to selectively close said drain holes;
flotation means mounted on said container adapted to hold it at preselected floating levels when in water;
a closable door mounted on said container so as to be able to seal shut said bait opening in the top wall thereof; and
a towing rope connected on one end to said container, a closing line connected between said towing rope and said closable door wherein said closing line connections are predeterminedly positioned so that when said towing rope is pulled tight the connected closing line will automatically pull said door closed and when loosened said door can be opened.

4,297,805
ANIMAL TRAP

Lester E. Kness, Granger; Marvin E. Kness, and Arnold A. Kness, both of Albia, all of Iowa, assignors to Kness Manufacturing Co., Inc., Albia, Iowa

Filed May 12, 1980, Ser. No. 149,188
Int. Cl.^{3} A01M *23/30*
U.S. Cl. 43—83.5 9 Claims

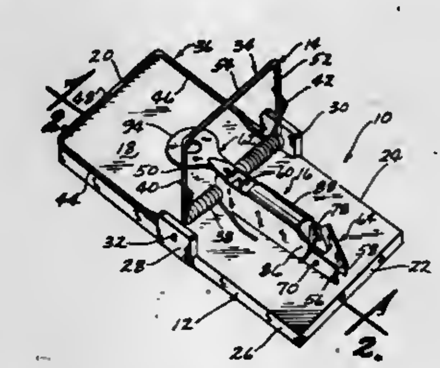

1. An animal trap comprising:
a base having an upper surface, opposite sides, and opposite ends;
a jaw member pivotally mounted on said base for pivotal movement about a first horizontal axis from a cocked position to a sprung position, said jaw member having at least one horizontal bar extending transversely of said base and being movable in an arc during said pivotal movement of said jaw member,
spring means yieldably urging said jaw member to said sprung position;
a catch member pivotally mounted to said base for pivotal movement about a second horizontal axis, said catch member having a catch pawl thereon for retentively engaging said bar when said jaw member is in said cocked position,
said catch member being pivotal about said second horizontal axis from a catch position wherein said catch pawl retentively engages said bar in said cocked position to a release position wherein said catch pawl moves out of retentive engagement with said bar,
a trip member pivotally mounted on said base for pivotal movement about said first horizontal axis, said trip member having a catch receiving surface, said trip member being pivotal about said axis from a set position wherein said catch receiving surface engages said catch and holds said catch against movement from said catch position, said trip member being pivotal to a trip position wherein said catch receiving surface frees said catch member for movement to said release position, thereby freeing said jaw member for movement to said sprung position,
a reset member pivotally mounted to said base for pivotal movement about said second horizontal axis, said reset member including a foot at one end thereof and a reset cam, said reset cam being engageable with said bar during movement of said jaw member to said cocked position, said reset member being rotatable in response to said engagement between said bar and said reset cam so as to cause said foot to engage said trip member and move said trip member to said trip position whereby said catch member will fall by gravity to said release position.

4,297,806
DANCING DOLL

Edward A. Ilkcagla, 12212 Calendola Ave., Fountain Valley, Calif. 92708

Filed Nov. 23, 1979, Ser. No. 96,654
Int. Cl.^{3} A63H *33/00*
U.S. Cl. 46—1 C 10 Claims

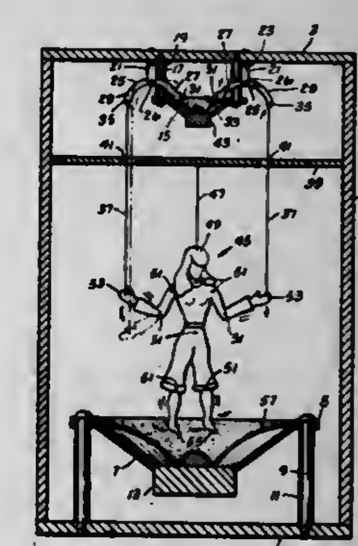

1. A dancing doll, comprising:
a stage having an overhead;
a speaker having a diaphragm, supported from said overhead;
at least one fulcrum attached to said overhead;
at least one lever arm pivotally attached to said fulcrum so that the inboard end of said at least one lever arm touches said diaphragm portion of said speaker;
an articulated doll; and
flexible means attached to the outboard end of said at least one lever arm and connected to a portion of said articulated doll.

4,297,807
TOY GAME BANK

Larry H. Buettner, 6146 Blackwall, Troy, Mich. 48098

Filed Feb. 4, 1980, Ser. No. 118,199
Int. Cl.^{3} A63H *33/00;* A63F *9/14*
U.S. Cl. 46—4 6 Claims

1. A coin toy game comprising:
(a) a supporting base member having a coin receiving interior chamber;
(b) a vertical wall member mounted on the supporting base member;
(c) means on said vertical member and supporting base member which forms a vertical coin track system, including a zig-zag coin path portion, through which a coin will roll by gravity and which has an upper end and a lower end terminating adjacent an opening in the supporting base member which communicates with the supporting base member interior chamber;
(d) a funnel means carried by said vertical wall member in a position above the supporting base member and communi-

cating at the lower end thereof with the upper end of said coin track system;
(e) mechanical coin propelling means mounted on said supporting base member for propelling a coin upwardly into said funnel means for passage therefrom into said coin track system and thence into the supporting base member interior chamber;
(f) said mechanical coin propelling means is a manually operated propelling means;
(g) said mechanical coin propelling means including
(1) a lever pivotally mounted on the supporting base member and having a coin receiving surface for disposing a coin thereon; and,

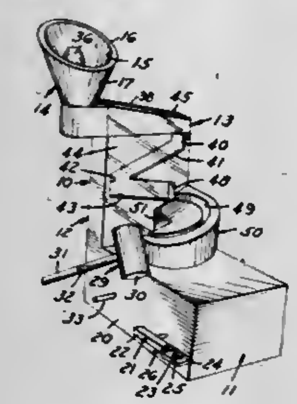

(2) means operatively mounted on said supporting base member for pivoting said lever, whereby a coin disposed thereon will be propelled upwardly into said funnel means; and,
(h) said means for pivoting said lever comprising a mallet having a handle pivotally mounted on the supporting base member and a mallet head on the handle for striking one end of said lever, whereby when the handle is manually pivoted downwardly, the mallet is raised upwardly to a position above said lever, and when the handle is released the mallet falls by gravity downwardly and strikes the lever.

4,297,808
TETHERED TOY FOR ORBITAL MOVEMENT
Bruce M. D'Andrade, Whitehouse Station, N.J., assignor to Arco Industries Ltd., Hong Kong
Filed Jan. 6, 1980, Ser. No. 157,179
Int. Cl.³ A63H *5/00*
U.S. Cl. 46—52 **2 Claims**

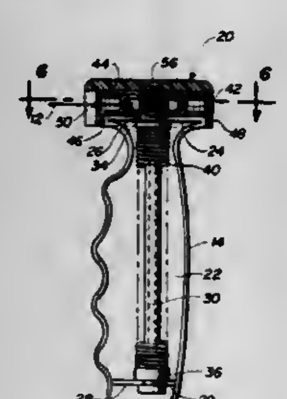

1. A whirling type toy comprising in combination a toy body adapted to be whirled through a circular orbital path in the atmosphere around a hollow handle composed of complementary molded halves and adapted to be supported manually by a human being, a circular inverted cup-shaped head supported rotatably by one end of said handle for rotation about the axis of said handle, a drum mounted within said head for rotation about the axis of said handle, a flexible tethering cord coiled from one end around said drum and having the other end of said cord connected to said toy body, an elongated coiled torsional spring extending axially within said handle and interconnected at one end to said drum, a shaft extending axially within said handle and fixed at one end to said head for rotation within said handle when said head is rotated around the axis of said handle to whirl said toy body through said orbital path and the other end of said spring being fastened to said shaft, an upper hub having a bearing opening rotatable about the upper end of said shaft and fixed to said drum and the upper end of said spring being fixed to said upper hub and thereby being fixed to said drum, a lower hub of a similar diameter to said upper hub fixed to the lower end of said shaft and the lower end of said spring being fixed to said lower hub, the upper end of said handle and lower end portion of said handle having transverse webs provided with bearing openings within which upper and lower hubs respectively are rotatable, the transverse web at the upper end of said handle having a diameter slightly less than the inner diameter of said head and coaxial therewith and said upper hub being rotatable within the bearing in said upper web and around said shaft in a manner to maintain the upper end of said handle free of contact with said head, the coil of said spring being in a direction to yieldably resist said cord being extended from said drum but yieldable to centrifugal force generated incident to rotating said toy body to assume said orbital path about the axis of said handle, and the extension of said cord from said head by centrifugal force causing rotation of said drum in a direction to rotate the upper end of said spring connected thereto to energize said spring in a manner to retract said cord around said drum when said centrifugal force is decreased.

4,297,809
CHIRPING FLYING SAUCER
Charles R. Branson, P.O. Box 216, Seahurst, Wash. 98062
Filed Dec. 20, 1979, Ser. No. 105,519
Int. Cl.³ A63H *27/00*
U.S. Cl. 46—74 D **4 Claims**

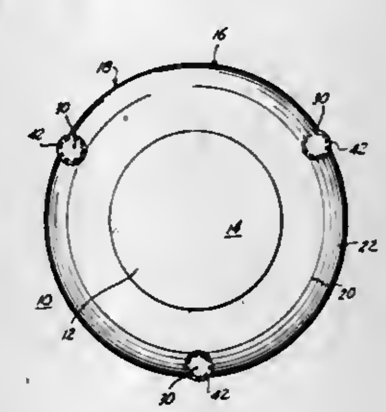

1. A saucer shaped flying toy to be sailed through the air and rotated about an axis of rotation, comprising:
a circular central disk having an upper surface;
a depending rim positioned concentrically about the central disk and having an outer surface;
a curved transition portion positioned between the central disk and the rim, said transition portion having a convex upper surface which provides a smooth transition between the upper surface of the central disk and the outer surface of the rim;
a pneumatically-operated bi-directional whistle device projecting about said convex upper surface and having a whistle chamber comprising a substantially cylindrical-shaped hollow body having an axis aligned substantially parallel to said axis of rotation and having an elongated slot orifice located in the side of said hollow body in a plane which is tangent to a cylinder formed around said axis of rotation at the periphery of said toy, said hollow body extending outwardly from the toy into the air, said orifice having a sharp edge bordering the perimeter thereof and being aligned so that, when the toy is rotated in either direction about its axis of rotation, the whistle device is intermittently operated; and
protective bumper means located adjacent said elongated slot orifice protecting said orifice from damage.

4,297,810
SPRAYABLE HYDROMULCH
William B. Hansford, 109 May St., Somerset, Ky. 42501
Filed Mar. 3, 1980, Ser. No. 126,412
Int. Cl.³ A01G *7/00*
U.S. Cl. 47—9 **15 Claims**

1. A pumpable hydromulch composition suitable for use in soil reclaimation, which comprises, on a dry weight basis:
Hay 80–90%
Paper Stock 10–17%
Binder up to 1.5%
Coloring Agent up to 1.5%
wherein said hay fibers are no greater than about 6 inches in length, and wherein said paper stock is in the form of particles of an average size no greater than about 1 inch in both dimensions.

4,297,811
LAMINATED PRINTED FOIL FLOWER POT WRAP WITH MULTICOLOR APPEARANCE
Donald E. Weder, Highland, Ill., assignor to Seven W Enterprises, Inc., Highland, Ill.
Filed May 19, 1980, Ser. No. 151,421
Int. Cl.³ B32B *3/10, 3/28, 15/08*
U.S. Cl. 47—72 **4 Claims**

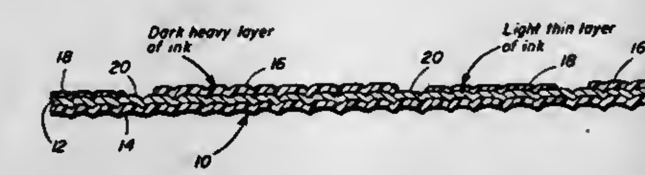

1. A decorative wrapping material or the like in the form of a flexible panel member having a multicolor appearance comprising a surface on said member, a relatively thick layer of colored ink on certain areas of the surface and relatively thin layer of colored ink, of the same color as the thicker layer on other areas of the surface thereby providing a single color having areas of varying intensity thereby producing a multicolor effect on the surface, and a thin layer of plastic material laminated to the flexible panel member on the surface opposite from the colored layer, said flexible panel member being a flexible metallic foil, the relatively thick areas and the relatively thin areas of colored ink being delineated from each other by an uncoated area of the metallic foil enabling it to be observed and enhancing the variation in color intensity between adjacent areas.

4,297,812
STORM DOOR ASSEMBLY
Shelvey C. McPhail, 4924 NW. 31st St., Oklahoma City, Okla. 73122
Filed Jul. 25, 1979, Ser. No. 60,787
Int. Cl.³ E05F *1/10*
U.S. Cl. 49—386 **12 Claims**

1. A storm door comprising:
a pair of opposed, parallel, hollow, elongated side rails;
a hollow header extending between and interconnecting the side rails at one of their ends;
a bottom rail extending between and interconnecting the side rails at their opposite ends;
a hollow center mullion extending between said side rails and parallel to said header and bottom rail, said center mullion including
a front plate;
a bottom plate;
a top plate having a recess therein;
a resilient sealing pad mounted on said top plate and including a portion retained in said recess; and
a removable inspection plate extending substantially parallel to said front plate and removably engaging said top plate and said bottom plate;
a kick plate between said center mullion and said bottom rail;
a spring return subassembly having a major portion thereof enclosed within one of said rails, header and center mullion;
a latch subassembly mounted on one of said side rails and including a part slidably and reciprocably movable on said one side rail in a direction parallel to the length of said one side rail, said part positioned for engaging said spring return subassembly in one position of the part to inactivate said spring return assembly;

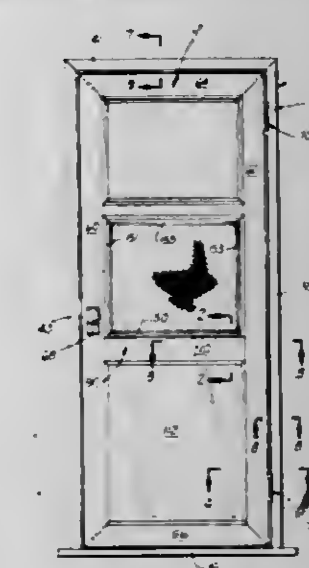

a slidable window sash subassembly slidably mounted between said side rails and resting in one portion upon said resilient sealing pad; and
a screen subassembly extending between said side rails at a position to overlie and extend parallel to said window sash subassembly when said window sash subassembly rests upon said resilient sealing pad, said screen subassembly including
an expanded metal grille;
a screen extending parallel to said expanded metal grille; and
means extending around and receiving edges of said grille and screen to retain them in their positions relative to each other.

4,297,813
MULTIPLE LAYER INSULATION COVER
James J. Farrell, Livingston Manor, and Anthony J. Donohoe, Ovid, both of N.Y., assignors to Cornell Research Foundation, Inc., Ithaca, N.Y.
Filed Jan. 9, 1980, Ser. No. 110,575
Int. Cl.³ E04B *1/345;* **A01G** *9/00*
U.S. Cl. 52—2 **7 Claims**

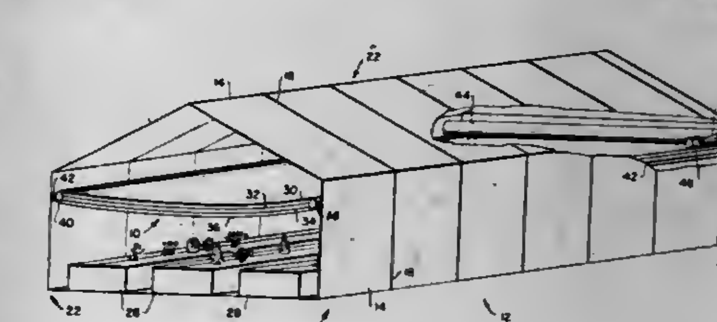

1. A multiple layer insulation cover for preventing heat losses from the interior of a building, said cover comprising:

a. four layers of flexible cloth backed metal foil;
b. first and second elongated air bladders in said cover spaced from each other and extending along longitudinal edges of said cover, said layers of said cover being spaced apart from each other by inflation of said bladders;
c. support tubes extending along the interior of the building, said tubes including axially extending slots and supporting said cover as said cover is deployed in said building;
d. T-shaped strips secured to outer edge portions of said cover adjacent said air bladders, said T-shaped strips cooperating with said support tubes to support said cover;
e. means for inflating said air bladders when said cover is deployed to space said layers; and
f. means to move said cover between deployed and storage positions.

4,297,814
DOME STRUCTURE
Jerome Tomassetti, Jr., Box 288, R.D. #1, Canonsburg, Pa. 15317, and Adolph F. Lerch, Lynwood Dr., Valencia, Pa. 16059
Filed May 29, 1979, Ser. No. 42,810
Int. Cl.³ E04B *1/32*
U.S. Cl. 52—81 **5 Claims**

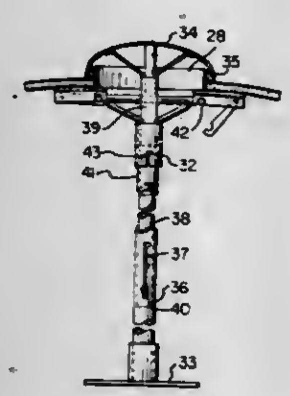

1. A dome structure comprising:
(a) a base;
(b) a plurality of side by side preformed and pre-arched panel members, at least a part of which taper from a wide base to a narrow top forming an apex;
(c) a stabilizer ring mounted on a removable stabilizer pole forming an apex of a dome spaced from the base;
(d) a pair of interfitting flanges on the opposite sides of each preformed and pre-arched panel member;
(e) an arched riser beam fixed to one side of each panel member adjacent one of said flanges;
(f) resilient connecting means engaging and joining said riser beam and a pair of interfitting flanges on each adjacent pair of panel members for connecting the same together;
(g) releasable locking means between the stabilizer ring and each panel member, releasably fastening each said panel member to said stabilizer ring;
(h) the flange on one side of the panel members forming an extension of the outer skin and the flange on the other side of the panel members lying intermediate the inner and outer skin and generally parallel therewith;
(i) the connecting means including a plurality of hemispherical headed bolts fitting in a hemispherical hole in the riser beam and passing through openings in the interfitting flanges and a resilient member between said interfitting flanges over their entire length; and
(j) an elongate trim cap frictionally engaging the bolts and panel members opposite the riser beam.

4,297,815
POWER ARM FITTED WITH COUPLING DEVICES FOR A MEMBER PROVIDED TO CONTROL ITS POSITION
Christian D. Moro, Saint Pathus, and Daniel G. Ranini, Varreddes, both of France, assignors to Poclain, Belleville, France
Filed Dec. 12, 1979, Ser. No. 102,894
Claims priority, application France, Dec. 29, 1978, 78 36909
Int. Cl.³ B66C *23/06;* **E02F** *5/02*
U.S. Cl. 52—115 **2 Claims**

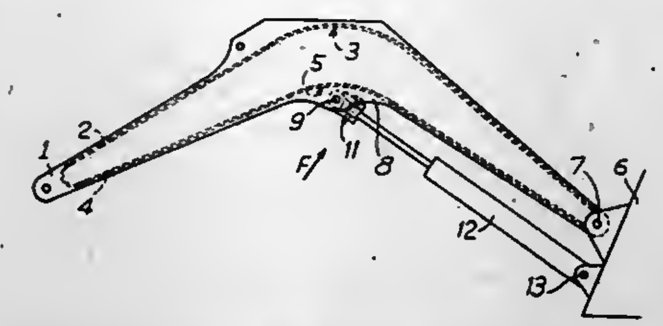

1. A power arm comprising four faces, generally parallel in pairs, two of which are constituted by plates, said arm being mounted to pivot, with respect to a structure, about an axis substantially perpendicular to the said plates, and being fitted with a tubular coupling lug of a jack controlling its position with respect to the said structure, said plates each having an integrally formed extending portion intermediate the length of said arm and extending beyond the faces of said arm, said lug comprising a jack pivoting device and its support, permitting a deflection of said jack which is substantially parallel to the deflection of the arm with respect to the structure, and which is constituted by said extending portions of the said plates, a tubular cross piece located within said tubular lug and having flat ends which are normal to the axis of said cross piece and located between said extending portions, the length of said cross piece being substantially equal to the spacing between the extending portions so as to act as a brace and prevent the portions from turning inwardly, said tubular lug being mounted on said cross piece for relative rotation with respect thereto, said tubular lug being of shorter length than the distance between said extending portions of said plates so as to permit free rotation of said tubular lug, and said cross piece prevents friction braking between said plate portions and said lug, said cross piece having an axis therein and which axis is provided with a threaded end, cooperating with a nut, to hold the cross piece in position between the said extending portions.

4,297,816
INTERLOCKING CONSTRUCTION BLOCK
George Kella, 3205 Happy Valley, Jackson, Mich. 49203, and Michael D. Kella, 7654 Carynway, Parma, Mich. 49269
Filed Jul. 12, 1979, Ser. No. 56,895
Int. Cl.³ E04C *1/10, 1/30*
U.S. Cl. 52—125 **1 Claim**

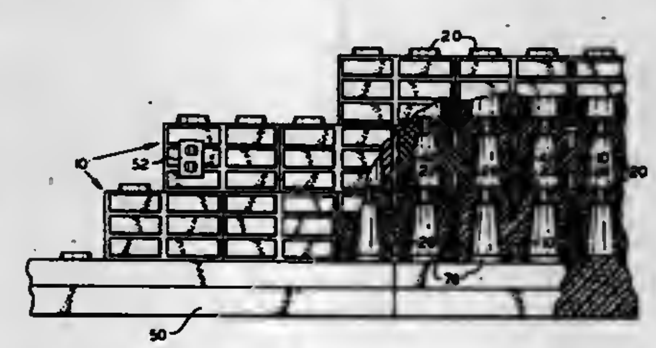

1. A thermally insulated interlocking construction block of rectangular configuration having lateral faces, ends, an upper side and a lower side, a pair of tapered projections defined on said upper side extending therefrom each having an axis and a wall surface converging in a direction away from said upper side, said projections each having a diametrical base dimension adjacent said upper side, a pair of tapered recesses each having an axis defined in said block intersecting said lower side, the axes of a projection and recess being coincident, said recesses each including a tapered wall surface at the intersection with said lower surface having a maximum diametrical dimension at said intersection slightly greater than said projection base dimension for nesting with the projection of a similar block, said recesses' wall surface tapering toward the coincident projection and axially aligned therewith terminating in an upper wall transversely disposed to the associated recess axis and in close proximity to said block upper side, an opening defined in each projection intersecting the associated recess upper wall and of a diameter less than that of the associated recess upper wall and large enough to receive a finger whereby said upper walls defines a finger grippable ledge when a finger is inserted through an opening, said projections and recesses being spaced from each other in the direction of the length of said block and equally spaced on opposite sides of a plane extending through the midpoint of the block perpendicular to the block's length, an elongated semi-cylindrical groove defined in each end of said block intersecting said upper and lower sides and having an axis lying within the plane parallel to said block faces and equidistant therebetween whereby the grooves of contiguous blocks define a locking pin receiving bore, a pin receiving bore defined in said block's upper side equidistant between said faces and ends of the associated block, a blind recess defined in said block upper side intermediate said lateral faces and projections defining a vertical wall adjacent each face inwardly spaced from the adjacent face and substantially parallel thereto whereby a fastener may be inserted through a recess wall to attach said block to support structure, said pin receiving bore intersecting said blind recess.

4,297,817
EARTHEN-COVERED STRUCTURE AND PANEL USED THEREIN
Ralph Bullock, and Orland E. Skibinski, both of P.O. Box 78, Irvington, Ill. 62848
Filed Mar. 4, 1980, Ser. No. 127,257
Int. Cl.³ E02D *27/00*
U.S. Cl. 52—169.6 **4 Claims**

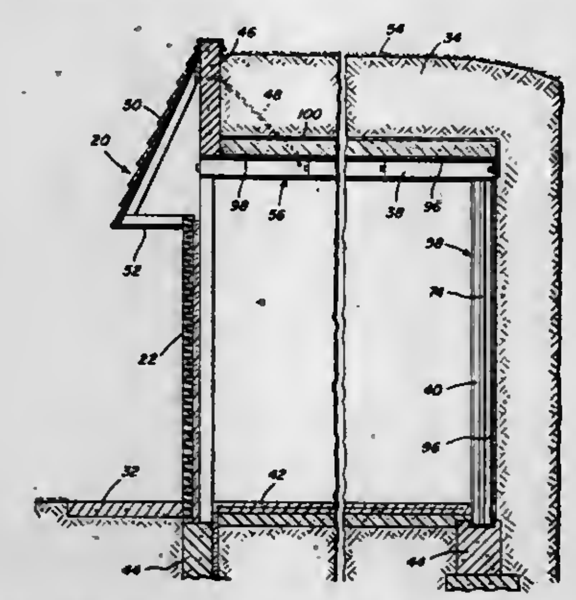

1. An earthen-covered building structure comprising a floor, upstanding peripheral wall and a roof, said wall including a front portion exposed to ambient atmosphere, all of the other wall portions and roof being covered by a layer of earth of substantial thickness to substantially reduce the quantity of energy necessary to maintain conditions comfortable to the occupants of the building structure, and a water impervious member covering the exterior of the roof and walls engaged by the earth, said roof and walls being constructed of a plurality of panels, means sealing the peripheral edges of said panels, means on the periphery of each panel for interlocking engagement with the edge of an adjacent panel, each panel comprising a plurality of generally parallel spaced studs interconnected by end members, a sheet of substantially rigid plywood attached to opposite surfaces of the studs and end members to define a hollow core panel, and an encapsulating material completely covering the exterior surfaces of said sheets, said encapsulating material being a glass fiber reinforced plastic, each of the roof panels having studs with a higher central section to form parallel shallow crests and valleys, said plywood sheets being nailed and glued to said studs and end members to provide an integrated panel which is capable of limited deflection under load without cracking or failure, said roof and wall panels forming the only load bearing components of the building structure.

4,297,818
ROOF VENTILATING LOUVER
William J. Anderson, Taylorsville, Miss., assignor to Anderson Metal Products Corp., Taylorsville, Miss.
Filed Mar. 27, 1980, Ser. No. 134,694
Int. Cl.³ E04B *2/00*
U.S. Cl. 52—199 **8 Claims**

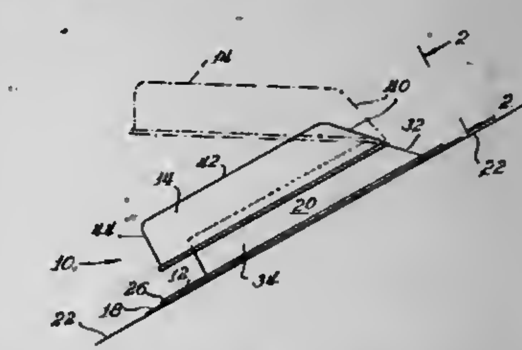

1. In a roof ventilating louver comprising a base comprised of a rectangular mounting panel having central rectangular opening therein and a four-sided collar rising from the periphery of said opening and a cover mounted upon said base in spaced relation to said collar, said cover comprising a flat rectangular top covering and extending beyond said aperture and a four-sided skirt flange depending from the periphery of said top part way to said mounting panel, and means for securing said cover to said base, the improvement wherein one side of said collar is formed to slope inwardly and the corresponding side of said skirt flange is similarly inclined and engages said sloping side of said collar to form a substantially continuous sloping surface from said base mounting panel to said top of said cover, and means for properly orienting said cover with respect to said base when assembling said louver, said orienting means comprising a pair of laterally spaced pilot holes in the upper portion of said sloping side of said collar and a pair of pilot posts extending downwardly from the lower portion of said inclined side of said skirt flange at locations coaxial with said pilot holes in the assembled louver.

4,297,819
REINFORCED MOLDED RESIN POOL WALL
George F. Arp, Fairport, N.Y., assignor to Heldor Associates, Inc., Morris Township, Morris County, N.J.
Filed Feb. 6, 1980, Ser. No. 119,102
Int. Cl.³ E04H *3/16*
U.S. Cl. 52—293 **21 Claims**

1. A pool wall formed of molded resin panels connected end to end, said panels having inward facing walls with peripheral flanges and strengthening ribs extending outward from said facing walls, said pool wall comprising:
a. longitudinal projections alternating along inner and outer edges of end flanges of said panels;
b. the alternation of said projections being reversed on opposite ends of said panels so that said projections at connected ends of said panels form mating interlocks against

vertical relative movement from panel to panel along said wall;

c. projection free spaces between said interlocked projections forming vertical channels extending up said end flanges of said panels;

d. said end flanges having holes spaced along said vertical channels;

e. horizontal channels formed along top flanges of said panels to join and extend between said vertical channels;

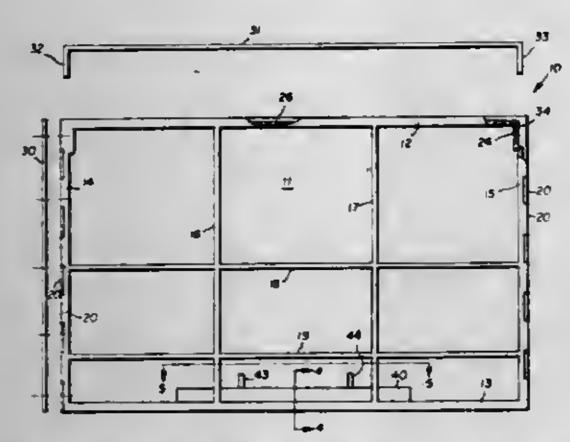

f. reinforcing strips extending up said vertical channels between said interlocked projections to lock said connected ends of said panels against transverse horizontal movement relative to each other;

g. said reinforcing strips also extending along said horizontal channels;

h. said reinforcing strips having holes registered with said holes in said end flanges; and

i. bolts extending through said end flanges and said reinforcing strips to connect said reinforcing strips together and secure said panels end to end.

4,297,820

COMPOSITE STRUCTURAL PANEL WITH MULTILAYERED REFLECTIVE CORE

Richard F. Artzer, Riverside, Calif., assignor to Covington Brothers Technologies, Fullerton, Calif.

Continuation-in-part of Ser. No. 857,235, Dec. 5, 1977, Pat. No. 4,226,067. This application Oct. 29, 1979, Ser. No. 89,564

Int. Cl.[3] E04C *2/26*

U.S. Cl. 52—309.11 **15 Claims**

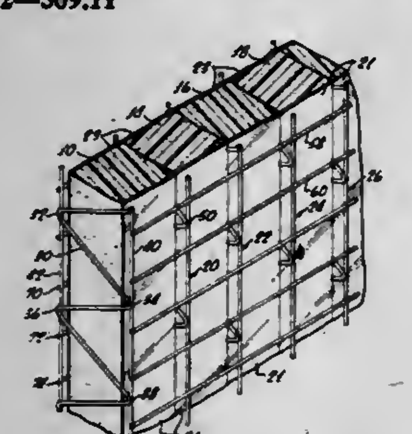

1. A structural panel comprising:

(a) a multilayered reflective core having opposite side surfaces and including:

(1) a plurality of contiguous elongated filler members, mutually contiguous ones of said filler members having opposed surfaces pressed against one another in vapor tight face-to-face contact with each other and having opposite side surfaces extending from said opposed surfaces, and

(2) a plurality of reflective vapor impervious membrane strips respectively fastened to and covering substantially the entire extent of one of said opposite side surfaces of respective ones of said filler members, mutually adjacent ones of said strips having lateral edges in edge-to-edge contact and collectively defining a substantially continuous reflective and vapor resistant layer on at least one of said side surfaces of said core;

(b) a three-dimensional supporting matrix including:

(1) a plurality of lattice structures, each being interposed between and pressed into adjacent edges of a pair of said reflective strips and a pair of said mutually opposed filler member surfaces, each of said lattice structures having opposite side portions projecting beyond said opposite side surfaces of said core, and

(2) a plurality of transverse members extending across said filler members and across said core, each of said transverse members being fixed to at least a group of said projecting opposite side portions of said lattice structures to thereby hold said lattice structures and filler members pressed together in a unitary panel configuration.

4,297,821

BUILDING STRUCTURES HAVING IMPROVED FIRE RESISTANT PROPERTIES

Lyle R. Peters, 11273 Hanover Rd., Cincinnati, Ohio 45240

Filed Mar. 16, 1979, Ser. No. 21,307

Int. Cl.[3] E04B *1/94*

U.S. Cl. 52—317 **3 Claims**

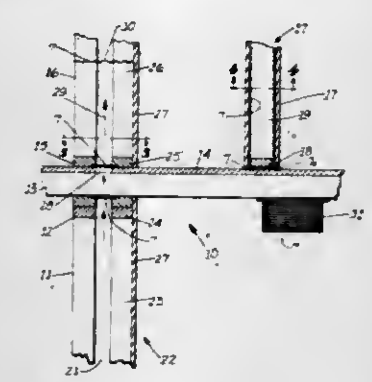

1. In a building structure of the type having structural walls formed by a pair of spaced parallel planar wall members enclosing a hollow duct-like air passageway therebetween for providing a flow of moving air therethrough to produce an insulating air envelope for said structure, the improvement in combination therewith comprising stationary firestop means positioned within said air passageway for permitting the flow of insulating air but preventing the spread of fire through said passageway, said means comprising a stationary layer of screen-like mesh fixedly secured to said wall members and extending transversely completely across said passageway, said mesh being formed of metallic strands of high purity copper having a thermal conductivity of at least about 0.9 cal-cm-sec/cm^2—°C., said mesh having openings of a size permitting the free passage of insulating air but preventing the passage of flame therethrough.

4,297,822

PANELLED CEILING

Willem Rijnders, Alblasserdam, Netherlands, assignor to Hunter Douglas International, N.V., Curacao, Netherlands Antilles

Filed Jan. 25, 1979, Ser. No. 51,504

Claims priority, application Fed. Rep. of Germany, Jul. 15, 1978, 2831203

Int. Cl.[3] E04F *13/08*

U.S. Cl. 52—484 **7 Claims**

1. In a suspended ceiling having a plurality of elongated supports arranged in spaced parallel relationship with each other, a plurality of holders secured to said supports, a plurality of panels, each of said panels having a pair of upwardly extending flanges at a pair of opposite edges thereof, one of

said upwardly extending flanges terminating in a support portion bent inwardly and downwardly with respect to the panel, the other of said upwardly extending flanges terminating in a support portion extending outwardly of said panel, the improvement comprising at least one of said holders having a base, means extending downwardly from said base and having at least one panel support element, the inwardly and downwardly bent support portion of a first panel engaging a panel

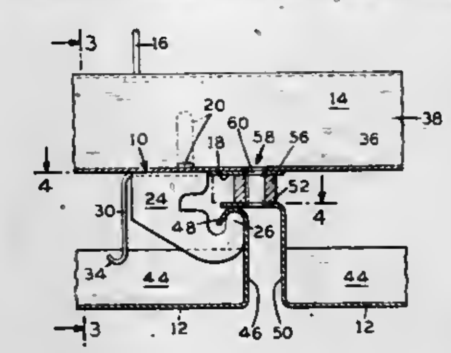

support element, the outwardly extending support portion of an adjacent panel engaging the inwardly and downwardly bent support portion of said first panel, a pair of spaced projections extending downwardly from said base, each panel having a second pair of upwardly extending flanges along its other opposite edges, and one of said second flanges from each of two adjacent panels extending into the space between said two projections.

4,297,823

HOLLOW WALL REPAIR DEVICE

Carl E. Keisler, 3629 Camelot Dr., Annandale, Va. 22003

Filed Apr. 17, 1980, Ser. No. 141,258

Int. Cl.[3] E02D *37/00*

U.S. Cl. 52—514 **8 Claims**

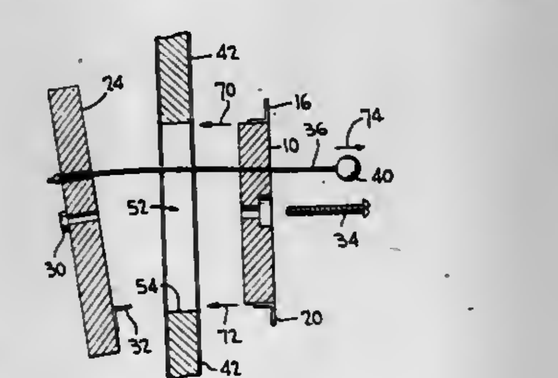

1. A device for attachment to sheetrock or the like wall boards for repairing holes therein or attaching fixtures thereto comprising:

a surface plate having an area approximately that of the area of an opening in said sheetrock, and having an attaching bolt hole and a positioner hole extending completely therethrough;

retainer means carried by said surface plate and extending laterally outwardly therefrom;

an interior plate having an area larger than the area of said surface plate and said opening in the sheetrock, and having an attaching bolt hole and a positioner hole extending completely therethrough; and a threaded nut securely attached to said interior plate and aligned with said attaching bolt hole;

positioner guide means carried by said interior plate;

an elongated flexible member extending through said positioner holes in said surface plate and said interior plate and having anchoring means at each end thereof, so that said plates may be separated and moved along said flexible member without sliding off said member; and,

an attaching bolt for passage through the bolt holes to engage said threaded nut.

4,297,824

MODULAR PREFABRICATED SEMI-PANELS TO BUILD INSIDE OR BEARING WALLS BY MEANS OF AUXILIARY CONNECTING SPACERS

Giovanni B. Ricci, Via Palozzina, 1-f Viterbo, Italy

Filed Jan. 22, 1979, Ser. No. 51,457

Claims priority, application Italy, Nov. 12, 1978, 86007 A/78; Jan. 31, 1979, 47849 A/79

Int. Cl.[3] E04C *1/16*

U.S. Cl. 52—568 **1 Claim**

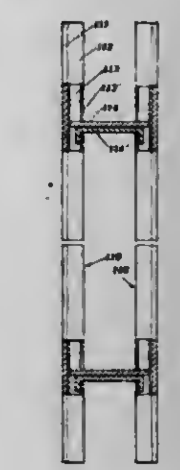

1. A construction member for building inner and/or bearing walls and the like, comprising at least a pair of semi-panels arranged spaced apart in opposed specular relation, said panels comprising plane bodies forming faces of a building structure, integral U-shaped pairs of connecting elements protruding from said bodies having opposed outer ends spaced a predetermined distance apart, said parts of elements lying perpendicular to said bodies and defining recesses therebetween, walls spaced from inner sides of said panels and interconnecting said outer ends of said pairs of connecting elements, said walls having opposed spaced openings, pairs of spacers extending between said bodies and into said opposed openings, opposite ends of one of said pairs of spacers solely defining the spacing between said panels while abutting against said inner sides of said panels, the other of said pairs of said spacers having opposite ends bent and engaged with inner surfaces of said interconnecting walls for solely interconnecting said panels, whereby the construction member withstands tensive and compressive stresses acting against opposite sides of said panels.

4,297,825

STRUT FOR SPACE FRAMES

George C. Harper, Jr., Coraopolis, Pa., assignor to Pittsburgh-Des Moines Corporation, Pittsburgh, Pa.

Filed Feb. 12, 1980, Ser. No. 120,844

Int. Cl.[3] E04B *1/32*

U.S. Cl. 52—729 **6 Claims**

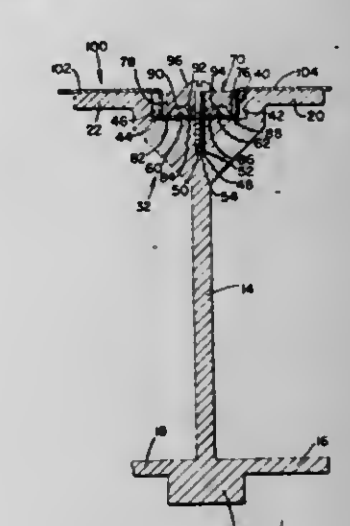

1. A roof strut comprising:

a web;
a bottom flange connected to said web and having a first boss thereon;
a top flange having a second boss thereon, said second boss connecting said top flange to said web;
a channel defined in said top flange, said channel having a planar bottom defined hy the top of said second boss;
a fastener receiving slot defined in said second boss to open into said channel;
a pair of upwardly projecting channel ridges defined on the bottom of said channel and extending for essentially the entire length of the roof strut, said channel ridges having a height substantially less than the depth of said channel;
a clamping bar sized to be loosely received in said channel, said clamping bar having a top and a bottom and including a plurality of clamping bar ridges on said bottom, said clamping bar ridges having heights greater than said channel ridges and located so that said channel ridges are located between adjacent downwardly projecting clamping bar ridges when said clamping bar is located within said channel, and fastener receiving holes defined in said clamping bar to be aligned with said fastener receiving slot so that a fastener can be used to attach said clamping bar to said second boss;
said web, bosses and flanges each having an end which is curved to correspond to the curvature of a hub of a space frame joint connector and each having an arcuate groove defined therein to receive a flange of such hub for connecting the roof strut to such hub; and
said clamping bar being adapted to attach a unitary sheet of roof covering material to the roof strut while crimping that sheet and said fastener passing through that sheet so such sheet is attached to the roof strut in a secure manner.

4,297,826

APPARATUS FOR PACKAGING TAPE CASSETTES

Helmuth Woertche, 70 Don Park Rd. Unit 7, Markham, Ontario, Canada (L3R 1G4)

Filed Aug. 23, 1979, Ser. No. 69,081

Int. Cl.[3] B65B *5/04, 25/00*

U.S. Cl. 53—157 **4 Claims**

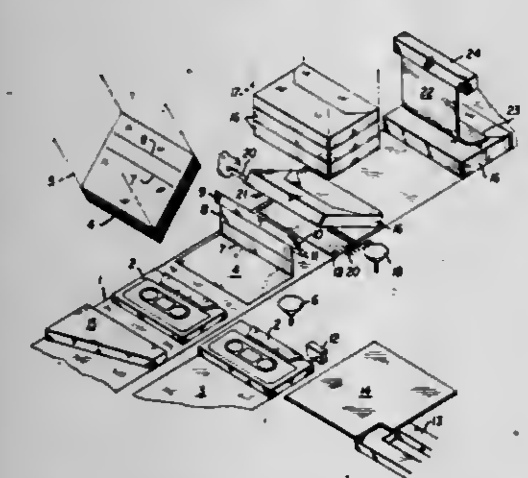

1. A cassette packaging apparatus for packing said cassettes in boxes having a body and a cover pivotally connected thereto comprising first conveyor means for moving cassettes one at a time along a straight line path of travel; first feed means for feeding inserts one at a time into the path of travel of the cassettes downstream of each cassette in the direction of travel of the cassette along said straight line path of travel; means for folding an insert about at least a portion of each cassette during travel of the cassette along said path of travel; second feed means for feeding boxes one at a time in an open position into said path of travel downstream of said folding means in the direction of travel of the cassette along said straight line path of travel, said second feed means including means for retaining the body of each said box above said path of travel with the cover thereof in an open position in said path of travel, whereby each cassette and insert combination travelling along said straight line path of travel enters a box; and means for closing each said box with a cassette and insert therein, said closing means including a spring plate extending downwardly into said path of travel, whereby the body of a box passing beneath said plate is pushed against the cover to the closed position.

4,297,827

APPARATUS FOR TREATING WASTE MATERIAL

William Allison, Preston, England, assignor to B. & R. Engineering Limited, Chorley, England

Filed May 23, 1979, Ser. No. 41,971

Claims priority, application United Kingdom, May 23, 1978, 21289/78

Int. Cl.[3] G21F *7/06, 9/16*

U.S. Cl. 53—282 **15 Claims**

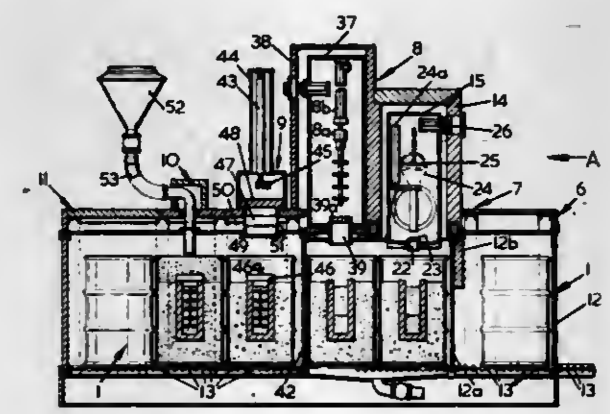

1. Apparatus for the packaging of waste material in a vessel having an outer drum, and an inner waste receiving chamber, and radiation shielding between the drum and the inner chamber, the apparatus comprising:
a vessel entry station having inlet and outlet doors for the transfer of vessels into and out of the vessel entry station;
a filling station downstream of the vessel entry station and having a filling position to which vessels are transferred from the entry station through the outlet door thereof, said filling station having filling means for introducing radioactive waste into said inner chamber, said filling means being provided within a filling means containment structure which may selectively communicate with, and be isolated from, the filling position, and said containment structure having external radiation shielding;
a mixing station having a mixing position to which a vessel is transferred from the filling position, said mixing station comprising mixing means provided in a mixing means containment structure the inside of which may selectively communicate with the mixing position whereby said mixing means may effect mixing of the contents of said inner container, said mixing means containment structure having external radiation shielding;
a capping station having a capping position to which a vessel is transferred from the mixing position, said capping station having means for introducing a protective capping material into said vessel, and said capping position having external radiation shielding;
means for providing a pressure differential in the apparatus such that the interior of the filling means containment structure is maintained at a lower pressure than the ambient pressure at the filling position and at the mixing position which are in turn at a lower pressure than the pressure of the interior of the mixing means containment structure whereby the flow of air in the apparatus will be toward the interior of the filling means containment structure; and
means for effecting transfer of a vessel from the entry station successively to the filling position, to the mixing position and to the capping position.

4,297,828

AUTOMATED LIQUID CONTAINER FILLING APPARATUS

Aaron J. Krieger, 2430 Harn Blvd, and Lawrence E. Elsie, 1573 Carroll St., both of Clearwater, Fla. 33516

Filed May 29, 1979, Ser. No. 43,125

Int. Cl.[3] B65B *3/02, 7/28*

U.S. Cl. 53—282 **6 Claims**

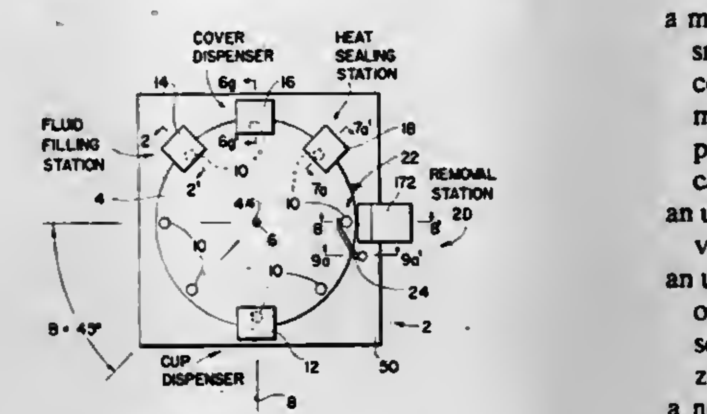

1. An automatic container filling apparatus, comprising:
a circular table rotatably mounted on a base member for rotation about an axis perpendicular to said base member, having a plurality of holes therethrough spaced at equal angles about the circumference of the table;
drive means mounted to said base member and operatively connected to said table for periodically rotating said table through said angle;
a cup dispenser mounted on said base member at a first position over said table, having a plurality of cups stored in a storage portion and a cup delivery mechanism adjacent to said cup storage portion, which operatively is connected to said drive means, for periodically dispensing one of said plurality of cups into each of said holes in said table in synchronism with said periodic table rotation;
a filling station mounted on said base member at a second position over said table, having a fluid reservoir storing a fluid to be dispersed into said cups and a fluid delivery mechanism connected to said reservoir, which is operatively connected to said drive means, for periodically dispensing a predetermined volume of said fluid through a delivery nozzle connected therewith, into each of said cups in said holes in said table in synchronism with said periodic table rotation;
a cover dispenser mounted on said base member at a third position over said table, having a plurality of cup covers stored in a cover storage portion and a vacuum picking nozzle adjacent to said cover storage portion which is operatively connected to said drive means, for periodically picking one of said plurality of covers and placing it over the mouth of each one of said cups filled with said fluid in said holes in said table in synchronism with said periodic table rotation;
a heat sealing station mounted on said base member at a fourth position over said table, having a heating element which is operatively connected to said drive means, for periodically heating said cover placed over the mouth of each one of said cups filled with said fluid in said holes in said table to heat-seal said cover to said cup in synchronism with said periodic table rotation;
a cup removal station, including a removal ramp, mounted on said base member at a fifth position adjacent to said table;
said drive means further comprising:
a motor for providing rotary power;
a Geneva driving wheel operatively connected to said motor and rotating at a constant angular velocity;
a Geneva indexing wheel having a plurality of n radial grooves in the circumference thereof equal in number to said plurality of holes in said table, for periodically rotating said table, between rest periods, through an angle of 360/n degrees;
said cover dispenser further comprising:
a rotary cam operatively connected to said motor and rotating at said constant angular velocity, having an actuating orientation timed to occur during said rest period for said table;
a fixed vertical plate mounted on said base and located beneath said cover storage portion;
a movable plate slidably mounted to said fixed plate to assume upward and downward positions and operatively connected to said rotary cam, for undergoing vertical motion from said upward position to said downward position and then back to said upward position when said cam moves through said actuating orientation;
an upper stop pin and a lower stop pin mounted on said fixed vertical plate, along said central axis;
an upper propulsion pin and a lower propulsion pin mounted on said fixed vertical plate, respectively spaced along a second vertical axis equidistant above and below the horizontal mid-line between said upper and lower stop pins;
a nozzle rotating cam rotatably mounted on said movable plate, having three radial grooves in the circumference thereof, the first said groove operatively engaging said upper stop pin when said movable plate is in said upward position to orient said nozzle rotating cam in an upward angular position, the second said groove operatively engaging said upper propulsion pin when said movable plate is moved toward said downward position to orient said nozzle rotating cam in a horizontal angular position, the third said groove operatively engaging said lower propulsion pin when said movable plate is moved further toward said downward position to orient said nozzle rotating cam in a downward angular position where said first groove operatively engages said lower stop pin;
said vacuum picking nozzle being mounted to said nozzle rotating cam, facing upward and contacting a first one of said plurality of covers in said cover storage portion when said nozzle rotating cam is in said upward angular position;
said vacuum picking nozzle adhering to said first cover by vacuum operation and withdrawing said first cover from said cover storage portion as said movable plate slides downward from said upward position;
said vacuum picking nozzle facing downward and positioning said cover onto one of said cups in one of said table holes aligned with said cover dispenser when said movable plate reaches said downward position in response to said cam being oriented in said actuating orientation.

4,297,829

LAWN MOWER BLADE ROTATION WARNING DEVICE

Stephen J. Hoff, Richmond, Ind., assignor to Hoffco, Inc., Richmond, Ind.

Continuation-in-part of Ser. No. 114,956, Jan. 24, 1980, Pat. No. 4,152,881. This application Oct. 10, 1980, Ser. No. 195,745

Int. Cl.[3] A01D *75/20*

U.S. Cl. 56—11.3 **10 Claims**

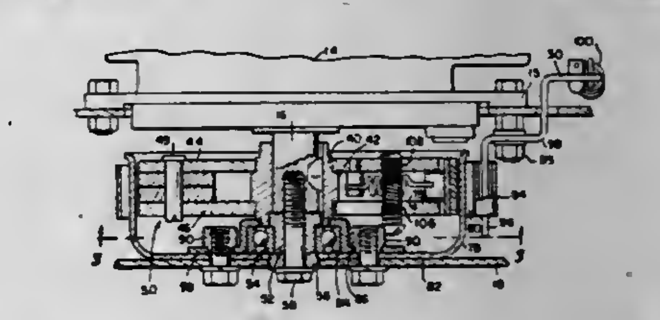

1. In a lawn mower having a rotary blade which is normally either driven by a motor through a releasable clutch having a driver connected to the motor or braked by a releasable brake, means for generating a warning signal in the event the clutch

and brake are both sufficiently disengaged to permit the blade to rotate under its own momentum, said means comprising a striker carried with the driven blade, and a resiliently bendable clicker arm fixedly mounted at one end to said clutch driver and having a striking portion at its free end normally held by such arm in an operative position in the path of said striker so as to be struck thereby to generate an audible signal, said arm being resiliently bendable in response to centrifugal force so as to move said striking portion to an inactive position out of the path of the striker when the clutch driver is rotated above a predetermined speed.

4,297,830
BEAN HARVESTER
Donald E. Dufner, Rte. 1, Box 124, Buxton, N. Dak. 58218
Filed Feb. 25, 1980, Ser. No. 124,328
Int. Cl.³ A01D *45/22, 35/24*
U.S. Cl. 56—13.6 **10 Claims**

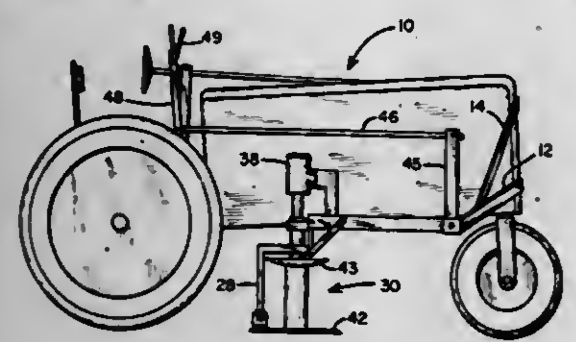

1. An apparatus for cutting beans and other crops, for attachment to a tractor comprising
(a) an elongated drawbar shaft and means for attaching said drawbar shaft in transverse position on a tractor between the front and rear wheels thereof;
(b) a plurality of sleeve sections rotatably fitted on said drawbar shaft;
(c) a plurality of brackets respectively attached to each of said sleeve sections and extending rearwardly of said drawbar shaft;
(d) a plurality of rotatable power drive units, each respectively attached to a bracket and having a downwardly projecting power drive shaft;
(e) a plurality of spool-shaped cutters, each respectively attached to a power drive shaft and having a lower cutting edge and an upper shield edge; and
(f) means for rotatably positioning each of said plurality of sleeve sections about said drawbar shaft; thereby raising and lowering each of said plurality of cutters.

4,297,831
CUTTING BLADE FOR A ROTARY LAWNMOWER
Peter P. Pioch, Idstein, Fed. Rep. of Germany, assignor to Black & Decker Inc., Newark, Del.
Filed Feb. 7, 1980, Ser. No. 119,584
Claims priority, application European Pat. Off., Jan. 29, 1980, 80100452
Int. Cl.³ A01D *55/18*
U.S. Cl. 56—295 **14 Claims**

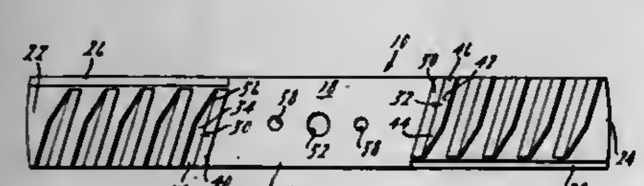

1. A cutting blade for a rotary mower having a horizontally disposed blade body having cutting edges thereon and adapted for rotational movement about the vertical axis thereof when operatively connected to a rotary mower, comprising:
a plurality of generally vertically extending fins mounted on said blade body, each of said fins being spaced from said vertical axis and having a forward portion which extends from said blade body at a position closer to said vertical axis than the position at which a rearward portion thereof extends from said blade body, and each of said fins being inclined outwardly away from said vertical axis to make an acute angle with respect to the portion of said horizontally disposed blade body extending radially outwardly therefrom

---

4,297,832
APPARATUS AND METHOD FOR MECHANICAL HARVESTING OF FRUIT
Yekutiel Alper, Rishon Le Zion; Itzhak Elkin, Rehovot; Itzhak Wolf, Herzliyah; Gabriel Mihai, Ramat-Hasharon, and Aharon Antler, Tel-Aviv, all of Israel, assignors to State of Israel Ministry of Agriculture, Bet Dagan, Israel
Filed Dec. 28, 1979, Ser. No. 107,855
Int. Cl.³ A01D *46/00*
U.S. Cl. 56—328 R **10 Claims**

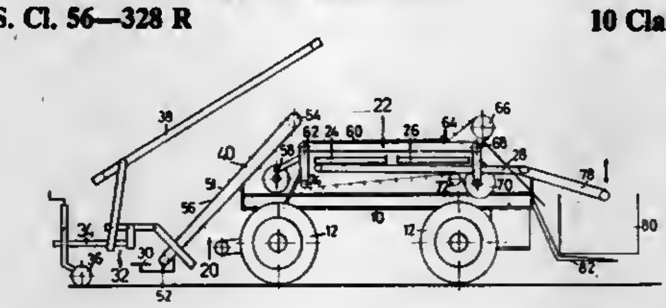

1. Mechanical fruit harvesting apparatus comprising:
cutter means for cutting fruit bearing portions of a tree from the trunk thereof;
separation conveyor means for engaging and vibrating said fruit bearing portions after cutting thereof so as to cause fruit to separate therefrom; and
feeding conveyor means for engaging said fruit bearing portions and bringing them into engagement with said separation conveyor means and including:
a first conveyor belt; and
a pair of cooperating second conveyor belts for engaging the upper parts of said fruit bearing portions between themselves, said first and second conveyor belts moving together in synchronous motion.

4,297,833
CROP PICKUP WITH OUTBOARD CAM CONTROL
Melvin V. Gaeddert, Newton, Kans., assignor to Hesston Corporation, Hesston, Kans.
Filed Oct. 11, 1979, Ser. No. 83,625
Int. Cl.³ A01D *43/02*
U.S. Cl. 56—364 **6 Claims**

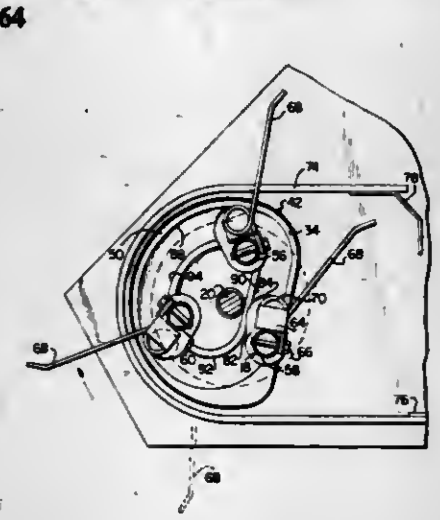

1. A crop pickup device comprising:

a pair of laterally spaced, stationary sidewalls;
a reel adapted for rotation about an axis extending between said sidewalls and including crop-engaging structure projecting transversely outwardly of said axis for engaging crop material during rotation of the reel and for feeding the same along a path of delivery generally transverse to said axis of rotation of the reel,
said structure being mounted for rocking movement to-and-fro in a prescribed pattern with respect to the direction of rotation of the reel during said rotation to improve the feeding action thereof, and being provided with an operating rocker adjacent one end of the reel; and
a stationary cam track mounted outboard of the sidewall adjacent said one end of the reel and operably receiving said rocker for effecting said rocking movement of the structure as the rocker is carried with the reel about said axis,
said one sidewall being provided with an opening through which said rocker and said cam track maintain their operative interengagement and through which access to said structure is afforded from the exterior of said one sidewall when said cam track is removed.

4,297,834
YARN BRAKE FOR A TEXTILE YARN PROCESSING MACHINE
Gustav Franzen, Willich, Fed. Rep. of Germany, assignor to Palltex Project Company GmbH, Krefeld, Fed. Rep. of Germany
Filed Jan. 29, 1980, Ser. No. 116,398
Claims priority, application Fed. Rep. of Germany, Jan. 29, 1979, 2903337
Int. Cl.³ D01H *7/86, 13/10, 15/00*
U.S. Cl. 57—58.86 **6 Claims**

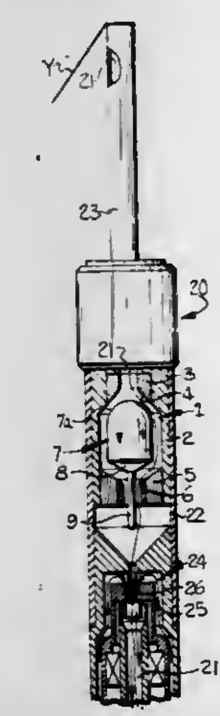

1. A yarn brake for applying tension to a yarn and comprising a substantially tubular brake housing having a passageway therethrough adapted for receiving a yarn moving in a predetermined direction, a stationary braking surface provided in said housing, a stationary permanent magnet positioned in said housing and longitudinally spaced from said braking surface in the direction of movement of the yarn, and a braking body positioned for longitudinal movement within said housing between said braking surface and said stationary magnet, said braking body comprising a permanent magnet having a magnetic polarization oriented in repelling relation to said stationary magnet for biasing the braking body toward and into engagement with said braking surface to apply tension to a yarn passing therebetween while allowing reliable separation of said braking body and said braking surface under the influence of a displacing force greater than the repelling force of said magnets.

6. In a spindle of a textile yarn processing machine having an axial yarn passageway extending therethrough and including a threading mechanism for creating a pneumatic flow in said yarn passageway to automatically thread a yarn therethrough during a thread-up operation, the combination therewith of an improved yarn brake for applying tension to the yarn passing through the yarn passageway during normal operation and constructed so as to readily accommodate the passage of enlarged portions in the yarn and to facilitate automatic threading of the yarn through said yarn passageway during a thread-up operation, said yarn brake comprising a substantially tubular brake housing mounted in said spindle and adapted for receiving a yarn therethrough in a predetermined direction, a stationary braking surface provided in said housing, a stationary permanent magnet positioned in said housing and longitudinally spaced from said braking surface in the direction of movement of the yarn, and a braking body positioned for longitudinal movement within said housing between said braking surface and said stationary magnet, said braking body comprising a permanent magnet having a magnetic polarization oriented in repelling relation to said stationary magnet for biasing the braking body toward and into engagement with the braking surface during normal operation to apply tension to a yarn passing therebetween, and wherein the two magnets have a repelling force which is smaller than the pneumatic force exerted on the braking body by said threading mechanism so that the brake is automatically released when a yarn is pneumatically threaded through the passageway and automatically returns to the braking position when the thread-up operation is completed.

4,297,835
SYNTHETIC STRINGS
Mituo Shimizu, 3-32 Kayabacho Chikusaku, Nagoya City, Japan
Filed Nov. 23, 1979, Ser. No. 96,685
Int. Cl.³ D02G *3/36*
U.S. Cl. 57—251 **12 Claims**

1. A string comprising:
a central filament;
at least one filament twisted around said central filament defining at least one continuous regularly disposed spiral bore therebetween; and
means for fusing said at least one filament to said central filament such that the cross-sectional area of said at least one filament and of said central filament remain circular and such that said at least one continuous regularly disposed spiral bore is maintained whereby a solidly integrated monofilament string is formed.

4,297,836
GUARD FOR YARN TEXTURING MACHINE
James R. Lilly, Stoneville, N.C., assignor to Burlington Industries, Inc., Greensboro, N.C.
Filed Jan. 28, 1980, Ser. No. 115,662
Int. Cl.³ D01H *13/26*
U.S. Cl. 57—291 **3 Claims**

1. In a machine for texturing textile yarns provided at the front with a bank of pairs of upright spindles having axially spaced ceramic discs stacked thereon with the discs on one spindle of a pair intermeshing with those on the other spindle

of the pair; the combination of a shield to prevent an operator from being struck in critical areas by flying pieces in the event a disc shatters during operation of the machine, comprising:

a transparent sheet of tough strong material disposed in front of and spaced from said bank, the area and location of said shield being such that any pieces of the ceramic discs flying forwardly in the event of disintegration of a disc

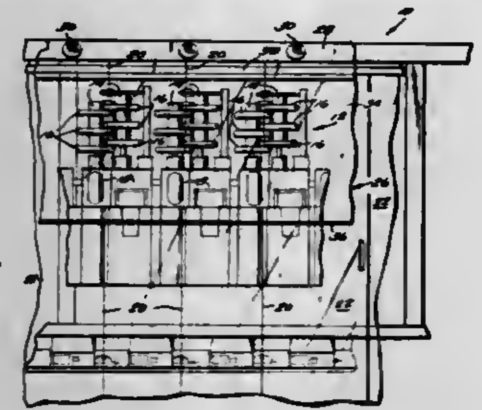

will strike said shield, the spacing between said sheet and bank being sufficient to permit necessary manipulation in the spindle area by an operator standing in front of the machine, and the lower edge of said shield being high enough to permit an operator to reach thereunder to perform said manipulations; and

means supporting said shield on the machine.

4,297,837

METHOD AND APPARATUS FOR PRODUCING SPUN YARN CHARACTERISTICS IN SYNTHETIC MULTIFILAMENT YARNS

Karl Bauer, Remscheid, and Eberhard Krenzer, Ennepetal-Rüggeberg, both of Fed. Rep. of Germany, assignors to Barmag Barmer Maschinenfabrik Aktiengesellschaft, Remscheid, Fed. Rep. of Germany

Filed Dec. 5, 1979, Ser. No. 100,357

Claims priority, application Fed. Rep. of Germany, Dec. 18, 1978, 2854578

Int. Cl.³ D02J *3/02;* D02G *1/16*

U.S. Cl. 57—350 36 Claims

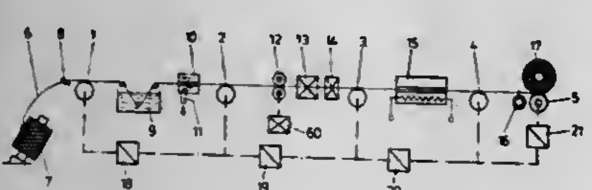

1. A method of producing a synthetic multifilament yarn having appearance, bulk and hand characteristics of conventional spun yarns of staple fibers while retaining strength characteristics of continuous filament yarns, said method comprising the steps of:

feeding the continuous multifilament yarn through a high velocity air jet texturing device while forming loops, bows, coils and the like in the filaments defining the surface of the yarn,

feeding the textured yarn from the air jet texturing device through a false twist device while false twisting the yarn, and

parting at least some of the filaments having loops, bows, coils and the like therein by contacting such filaments with a filament parting device while guiding said yarn past the filament parting device along a predetermined path of travel which limits contact between the filament parting device and the yarn solely to the surface filaments to maintain the interior filaments of the yarn substantially intact to form free filament or fiber ends projecting from a strong substantially uninterrupted filament core.

4,297,838

ELECTRONIC TIMEPIECE

Minoru Watanabe; Kazunari Kume, both of Tokorozawa; Hideshi Ohno, Sayama, and Munetaka Tamaru, Tokyo, all of Japan, assignors to Citizen Watch Co. Ltd., Tokyo, Japan

Continuation of Ser. No. 789,086, Apr. 20, 1977, abandoned. This application Dec. 8, 1978, Ser. No. 967,715

Claims priority, application Japan, Apr. 27, 1976, 51-48285; Aug. 20, 1976, 51-111435

Int. Cl.² G04C *3/00*

U.S. Cl. 368—76 3 Claims

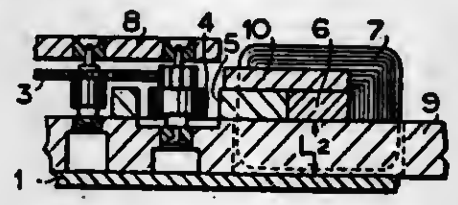

1. An electronic timepiece comprising a step-motor used as an electro-mechanical transducer and including a coil having a coil winding core, stator and rotor; a reduction gear train for reducing rotation of said rotor of said step-motor; a bearing for rotatably supporting at least one gear of said reduction gear train; a gear train supporting plate; and a substrate for supporting all of the above mentioned parts of the timepiece; the improvement comprising a portion of said coil winding core and said stator located in the same plane and adjacent said substrate and a second portion of said coil winding core integral with said first portion and extending on the side of said stator opposite said substrate to form a magnetic connection means between said core and a side of said stator opposite said substrate.

4,297,839

CHAIN LINK AND CHAIN ASSEMBLY INCLUDING SAME

Gerald W. Gurney, Ada, Mich., assignor to C. L. Frost & Son, Inc., Grand Rapids, Mich.

Filed Oct. 1, 1979, Ser. No. 80,655

Int. Cl.³ F16G *13/18*

U.S. Cl. 59—85 28 Claims

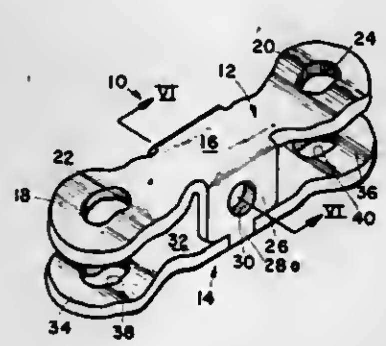

1. A chain link assembly comprising first and second aligned, rigid link members, each link member being elongated and including opposed ends, each end having an opening for receiving fastening means for attaching said assembly in a chain, and rigid bridge means extending between said link members at at least two spaced positions intermediate said opposed ends and said openings of said link members for spacing and supporting said link members when said link members are fitted together to form said assembly; said bridge means including support means for supporting a chain support wheel support.

4,297,840

CHAIN LINK AND CHAIN ASSEMBLY INCLUDING SAME

Gerald W. Gurney, Ada, Mich., and William E. Lanham, Jr., Stone Mountain, Ga., assignors to C. L. Frost & Son, Inc., Grand Rapids, Mich.

Filed Oct. 1, 1979, Ser. No. 80,656

Int. Cl.³ F16G *13/18*

U.S. Cl. 59—85 15 Claims

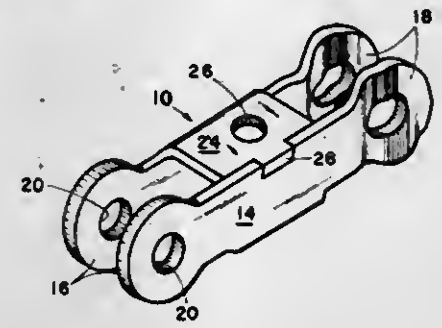

1. A chain link assembly comprising first and second identical, elongated, rigid link members, each link member having a longitudinal portion and a transverse bridge portion, said longitudinal portion having first and second opposed ends with an opening in each end for receiving fastener means for attaching said assembly in a chain, one of said opposed ends of each of said link members including a curved surface facing outwardly of said assembly, the other of said opposed ends of each link member being generally planar; said opening in said one end in each of said link members being elongated in the direction of elongation of said link member, said bridge portion being intermediate said openings and opposed ends and adapted to engage, support and index each opposite longitudinal portion such that when said link members are fitted together and receive fastener means, said link members form a chain link assembly with spaced, longitudinally extending sides supported through said bridge portions; said bridge portions each including support means for supporting a conveyor support wheel support; said one end of each of said link members being at the same end of said assembly to allow articulation of said assembly at said end when connected in a chain.

4,297,841

CONTROL SYSTEM FOR CHENG DUAL-FLUID CYCLE ENGINE SYSTEM

Dah Y. Cheng, Los Altos Hills, Calif., assignor to International Power Technology, Inc., Sunnyvale, Calif.

Filed Jul. 23, 1979, Ser. No. 59,591

The portion of the term of this patent subsequent to Dec. 12, 1995, has been disclaimed.

Int. Cl.³ F02C *7/00, 7/10*

U.S. Cl. 60—39.3 7 Claims

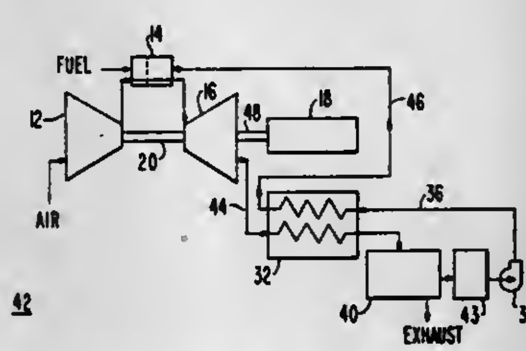

1. A control system for a dual-fluid, Brayton/Rankine cycle engine comprising control means for following a control path defined by the locus of peak efficiency points at reduced loads, where the control path results in a declining turbine inlet temperature as the load decreases; and wherein said control means comprises:

(a) a first control system for controlling the Brayton cycle part of the dual-fluid cycle engine;

(b) a second control system for controlling the Rankine part of the dual-fluid cycle engine; and

(c) memory means for setting the desired operating points of said first and second control systems, where the memory means contains predetermined settings for each of the two control systems for all load conditions, and wherein said predetermined settings comprise at least fuel flow rates and water flow rates.

4,297,842

NOX SUPPRESSANT STATIONARY GAS TURBINE COMBUSTOR

Bruce W. Gerhold, Rexford, and Colin Wilkes, Scotia, both of N.Y., assignors to General Electric Company, Schenectady, N.Y.

Filed Jan. 21, 1980, Ser. No. 113,638

Int. Cl.³ F02C *3/30;* F23R *3/54*

U.S. Cl. 60—39.06 5 Claims

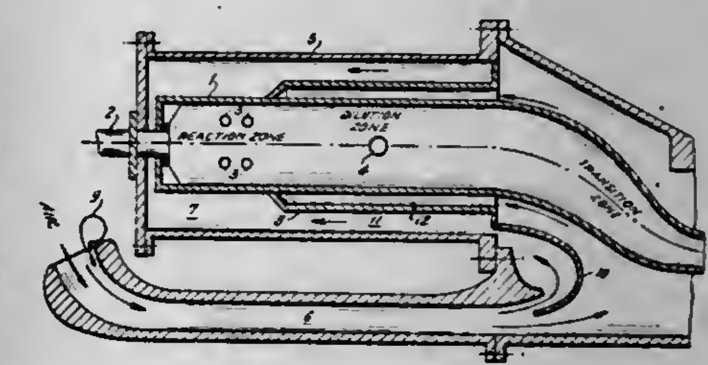

1. In a stationary gas turbine combustor comprising a reaction zone, a dilution zone, a combustion liner enclosing said reaction and dilution zones, means to introduce air into said reaction zone through said liner, means to introduce air into said dilution zone through said liner, a fuel nozzle for introducing fuel into said reaction zone through said liner and air flow means for conveying air from an air compressor to said means for introducing air into said reaction zone and said means to introduce air into said dilution zone, the improvement comprising an air flow splitter disposed within said air flow means for dividing the flow of air into a first path communicating with said means to introduce air into said reaction zone and a second path communicating with said means to introduce air into said dilution zone and, means for injecting NOx suppressants into said air flow means, said injecting means disposed adjacent said air compressor and relative to said air flow means to concentrate said NOx suppressants in said first path by utilizing the radially stratified compressor air flow.

4,297,843

COMBUSTOR OF GAS TURBINE WITH FEATURES FOR VIBRATION REDUCTION AND INCREASED COOLING

Isao Sato; Fumio Kato; Yoshihiro Uchiyama; Nobuyuki Iizuka, and Tsuneyuki Hata, all of Hitachi, Japan, assignors to Hitachi, Ltd., Tokyo, Japan

Filed Oct. 12, 1979, Ser. No. 84,438

Claims priority, application Japan, Oct. 16, 1978, 53-126192

Int. Cl.³ F02C *7/18*

U.S. Cl. 60—39.32 7 Claims

1. A combustor of a gas turbine having a plurality of combustor liners, a plurality of transition pieces connected to respective liners and adapted to rectify the flow of combustion gas coming from said liners, and a plurality of outer casings surrounding respective combinations of said liners and said transition pieces, comprising a guide plate having a radial portion disposed in each gap formed between each pair of adjacent transition pieces, said guide plate being adapted to rectify the air flowing through said gap, each guide plate

having circumferential members that overlie the transition pieces and are attached to the radial portion of the guide plate,

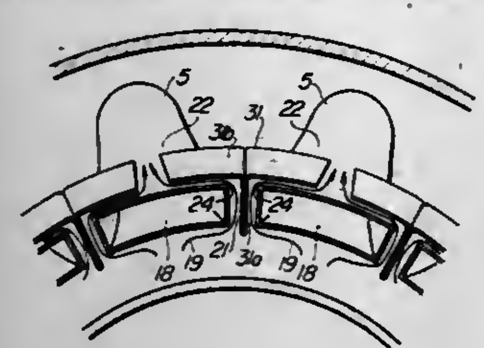

and said circumferential members form a gap between the adjacent circumferential members for exit of the cooling air.

4,297,844

DEVICE FOR HYDRAULIC CONTROL OF THRUST REVERSAL FOR JET ENGINE

Yves R. Halin, Le Mee sur Seine, and Jacques R. A. LeLandais, Melun, both of France, assignors to Societe Nationale d'etude et de Construction de Moteurs d'Aviation, Paris, France

Filed Jul. 25, 1979, Ser. No. 60,597

Claims priority, application France, Jul. 25, 1978, 78 21896

Int. Cl.³ F02K *1/72;* **F16D** *31/02*

U.S. Cl. 60—226 A **10 Claims**

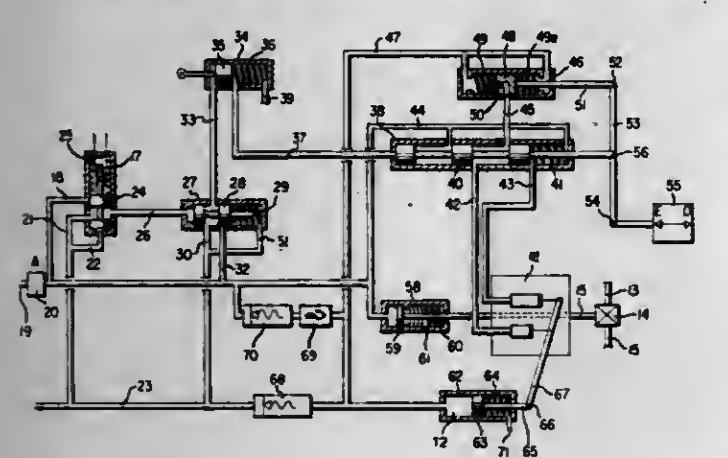

1. A device for hydraulic control of thrust reversal for jet engines in which thrust reversal units which can be positioned in either a deployed or concealed position are activated by jacks which are connected through flexible units to a rotary hydraulic engine, fed under constant pressure by a hydraulic circuit comprising:

means for slowing the speed of the reversal units upon approaching said deployed or concealed position; and

means for directly subjecting the capacity of the engine to back pressure of the engine,

wherein said means for directly subjecting the capacity of the engine to back pressure of the engine is not sensitive to the engine feed pressure and comprises a control jack having an output whose position determines engine capacity, means for communicating said output of said control jack only with a source of engine back pressure, and spring means in said control jack and adapted to oppose said back pressure, and wherein the direction of opposition of said spring means moves said output towards increased engine capacity.

4,297,845

METERING TYPE HYDROSTATIC STEERING UNIT WITH PLANETARY GEARING TYPE INPUT AND FEEDBACK MEANS

Erik Kyster, Augustenborg, Denmark, assignor to Danfoss A/S, Nordborg, Denmark

Filed Nov. 26, 1979, Ser. No. 97,349

Claims priority, application Fed. Rep. of Germany, Dec. 13, 1978, 2853704

Int. Cl.³ B62D *5/08;* **F15B** *13/04*

U.S. Cl. 60—384 **1 Claim**

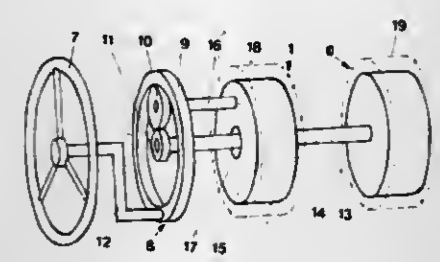

1. A hydrostatic steering assembly, comprising, a bidirectional servomotor, a control valve unit having inlet and outlet ports and two working ports connected to said servomotor, pump and tank means connected to said inlet and outlet ports, said control valve unit having a fixed housing member and an annularly shaped valve member rotatable relative thereto in opposite directions with respect to a neutral position, epicyclic gearing having a ring gear and a sun gear with planetary gear means therebetween, steering shaft means connected to said ring gear, bidirectional metering motor means having output shaft means connected to said sun gear and being operated by fluid pressure from said control valve unit for supplying metered quantities of pressurized fluid to selected sides of said servomotor through said working ports, said metering motor output shaft means extending through said valve member, and said planetary gear means being connected to said valve member for moving said valve member in opposite selected directions away from and towards said neutral position responsive to actuation by said steering shaft means.

4,297,846

TWO-COMPARTMENTS FLUID RESERVOIR

Leonardo Cadeddu, Crema, Italy, assignor to Benditalia S.p.A., Crema, Italy

Filed Mar. 14, 1980, Ser. No. 130,326

Int. Cl.³ B65D *1/24*

U.S. Cl. 60—585 **9 Claims**

1. Two-compartment reservoir for liquid, particularly for supplying dual master-cylinders with hydraulic fluid, composed of two complementary parts superposed and assembled by sticking, heat soldering, or other similar method, a median partition solid with said parts and oriented transversally to the longitudinal axis of the reservoir dividing the interior of the latter into two compartments each provided with an outlet orifice, one at least of these compartments having in addition a filling orifice, and the two compartments communicating via a transfer channel which opens into each of them characterized in that said transfer channel runs along one of the side walls of the reservoir and parallel to the plane of the level of liquid contained in this reservoir, this transfer channel itself being composed of two superposed complementary parts, namely a lower part in the general shape of a gutter and an upper part, solid respectively with the lower part and upper part of the reservoir, these parts together defining a closed contour and their junction plane coinciding with that of the constituent parts of the reservoir, and in which, to allow construction with the same constituent elements of two types of reservoir usable for two different inclinations of the associated master-cylinder, and particularly at a zero inclination and at an inclination defined by an angle (α) with respect to the horizontal, the plane of junction of the two parts (12, 14) of the reservoir forms with the bottom of each of them an angle ($\alpha/2$) equal to half the angle of inclination defined above, that the lower part (14) of the reservoir bears a lower transfer-channel part along each of its two side walls, the bottom (23) of one of these channel parts (22) originating at the level of the junction plane and at the lower end of a side wall and being inclined at an angle ($\alpha/2$) with respect to said junction plane, the bottom (25) of the other channel part (24) also originating at the level of the junction plane but at the higher end of the other side wall and

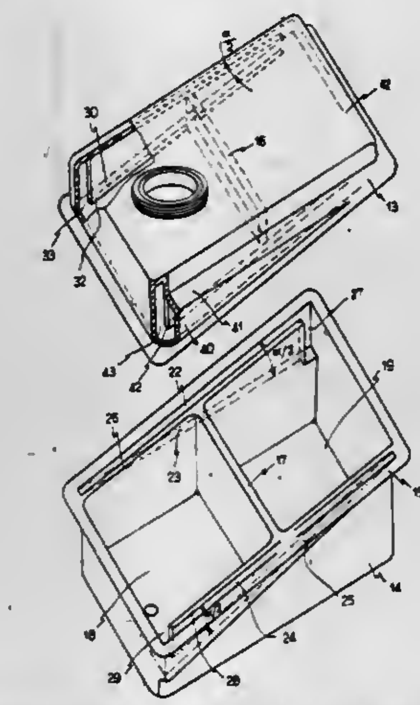

being inclined in the opposite direction to the preceding at the same angle ($\alpha/2$) with respect to said junction plane, and that the upper part (12) of the reservoir bears along one of its two side walls an upper transfer-channel part whose depth extends along the whole wall, said upper part of the transfer channel cooperating with one or other of said lower parts according to the relative position of the two constituent parts of the reservoir so as to form a transfer channel of closed section opening at its ends, and along the other side wall a second channel part, less deep, whose roof originates at the level of the junction plane and is inclined with respect to this last at an angle greater than $\alpha/2$ the said channel part cooperating with the second lower part to form a channel blind at one end and capable, at the other end, of allowing air to escape on filling with fluid.

4,297,847

CONVERSION OF GEOTHERMAL ENERGY FROM SUBTERRANEAN CAVITIES

Carl C. Clayton, Corpus Christi, Tex., assignor to PPG Industries, Inc., Pittsburgh, Pa.

Filed Aug. 30, 1979, Ser. No. 71,337

Int. Cl.³ F03G *7/00*

U.S. Cl. 60—641.3 **12 Claims**

1. A method of recovering geothermal energy, which comprises:

a. introducing immiscible liquid hydrocarbon working fluid below the surface of a brine solution maintained in a subterranean cavity produced by the solution mining of salt within a salt dome that is in heat exchange relationship with a geothermal formation, said hydrocarbon working fluid being vaporizable at the temperature of the brine solution;

b. collecting vaporized working fluid in a vapor space that is directly above the brine solution and within the subterranean cavity until the working fluid vapor develops pressure sufficient to mobilize vaporized working fluid to the earth's surface, said vapor space being sufficiently large to separate brine solution entrained in vaporized working fluid as the vaporized fluid passes through the vapor space;

c. removing pressurized working fluid vapor from the cavity to the earth's surface; and

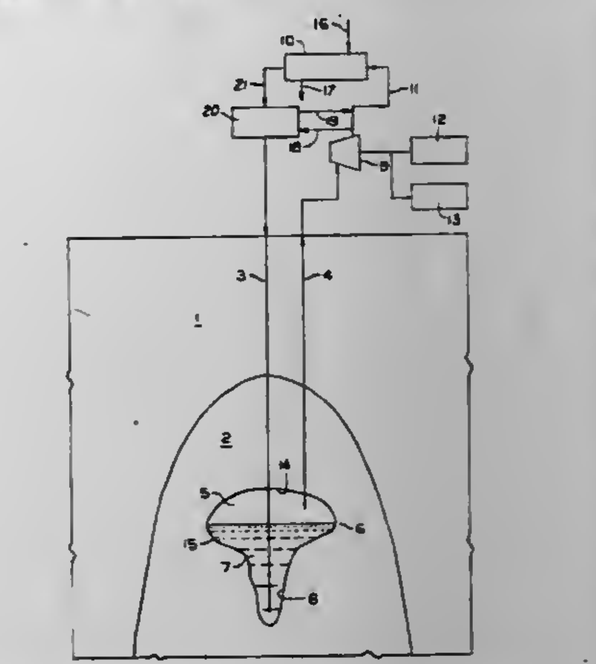

d. converting the pressure-volume energy of the pressurized working fluid vapor to another form of energy by isentropic expansion of the working fluid vapor.

4,297,848

METHOD OF OPTIMIZING THE EFFICIENCY OF A STEAM TURBINE POWER PLANT

George J. Silvestri, Jr., Upper Chichester, Pa., assignor to Westinghouse Electric Corp., Pittsburgh, Pa.

Filed Nov. 27, 1979, Ser. No. 97,770

Int. Cl.³ F01K *13/02*

U.S. Cl. 60—660 **12 Claims**

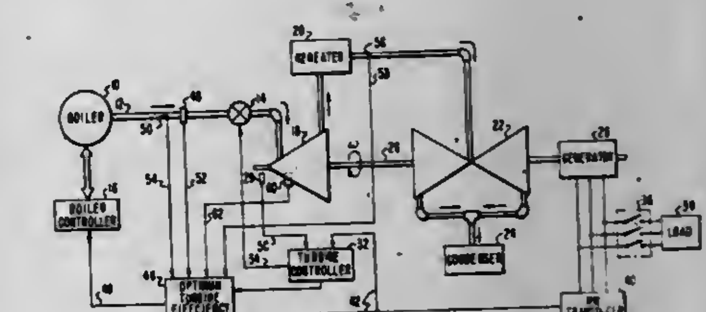

1. A method of improving the operational efficiency of a steam turbine power plant at a desired power demand output value comprising the steps of:

measuring a predetermined turbine parameter at said desired power demand output value of said power plant, said predetermined turbine parameter being representative of the steam flow through said steam turbine during the operation thereof;

compensating said measured values of said predetermined turbine parameter in accordance with varying thermodynamic conditions of said steam turbine during the operation thereof at said desired power demand output value; and

governing an adjustment of the steam pressure at the throttle of said steam turbine at said desired power demand output level based on selected compensated measured values of said turbine parameter to improve the operational efficiency of said steam turbine.

4,297,849
HEAT EXCHANGERS FOR THERMO-ELECTRIC INSTALLATIONS COMPRISING THERMO-ELEMENTS
Jean Buffet, Paris, France, assignor to Air Industrie, Courbevole, France
Filed Jun. 22, 1979, Ser. No. 51,132
Int. Cl.[3] F25B *21/02*
U.S. Cl. 62—3 18 Claims

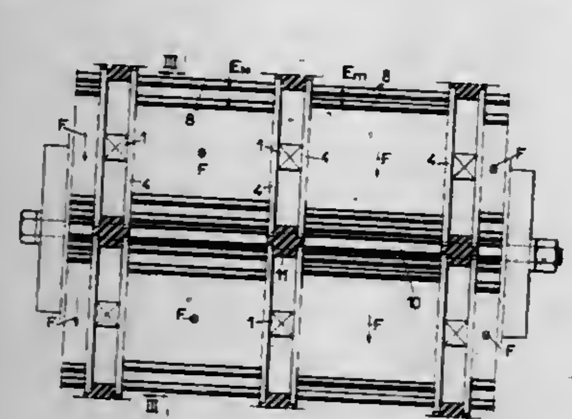

1. A heat exchanger for a thermo-electric installation comprising thermo-elements mounted between a hot wall and a cold wall, said heat exchanger including two base plates thermally contacting said hot or said cold wall and a plurality of heat exchange surfaces extending between said two base plates, each of said heat exchange surfaces being constituted by an array of homogeneous one-piece bars, said bars being firstly disposed and spaced apart in a first plurality of planes perpendicular to the direction of fluid flow and secondly disposed and spaced apart in a second plurality of planes parallel to the direction of fluid flow.

4,297,850
WALL MOUNTED THERMOELECTRIC REFRIGERATOR
Kingstone L. H. Reed, Barrie, Canada, assignor to Koolatron Industries, Inc., Barrie, Canada
Filed Dec. 26, 1979, Ser. No. 106,940
Int. Cl.[3] F25B *21/02;* F25D *23/12*
U.S. Cl. 62—3 4 Claims

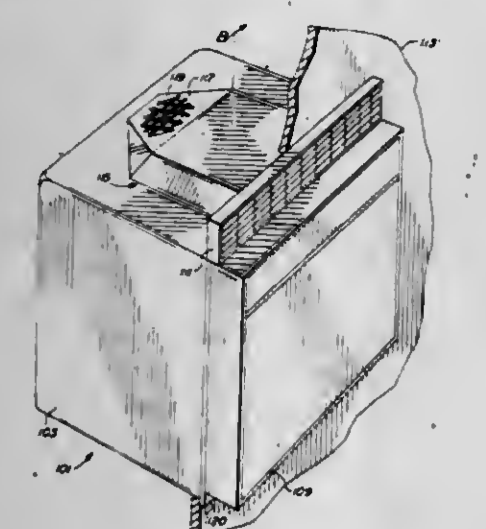

1. A thermoelectric refrigeration unit for permanent installation in a recreational vehicle, boat, cabin or the like, said thermoelectric refrigeration unit including an insulating front-opening door, an insulating storage compartment which is sealed when the front-opening door is closed, the storage compartment being bonded by bottom, a top, and two side walls, said thermoelectric refrigeration unit comprising in combination:

a. a thermoelectric unit including an internal heat exchanger disposed on the inner surface of the storage compartment, a thermally conductive block of material extending through an opening in one of said top and said side walls and in intimate thermal contact with said internal heat exchanger, a solid state thermoelectric device in intimate thermal contact with said thermally conductive block, and an external heat exchanger disposed on the outer surface of said insulating wall and in intimate thermal contact with said solid state thermelectric device;

b. an electric fan unit for blowing relatively cool air from outside of said thermoelectric refrigeration unit between fins of said external heat exchanger;

c. front grill means attached to a front edge of said one of said top and said side walls for allowing the relatively cool outside air to be drawn by said fan unit into an installation region into which the thermoelectric refrigeration unit is installed and for allowing air blown between the fins of said external heat exchanger to pass outside of the installation region in which said thermoelectric refrigeration unit is installed;

d. housing means disposed on the outer surface of one of said top and said side walls for enclosing said external heat exchanger and said fan unit, a portion of an inner surface of said housing means being disposed immediately adjacent to said external heat exchanger to efficiently guide air blown by said fan unit through the fins of said external heat exchanger, said housing means having a front opening extending through a first portion of said front grill means for guiding the air from the fins of said external heat exchanger through said first portion of said front grill means, the air passing through the fins of said external heat exchanger being heated thereby, said fan unit, said housing means, and said first portion of said front grill means cooperating to eject the heated air at high velocity through said first portion of said front grill means to cause said heated air to move away from said front grill means so that said heated air is not recirculated through said thermoelectric refrigeration unit, said housing means including a rear opening disposed adjacent to a fan blade of said fan unit for allowing said relatively cool outside air to be drawn into said housing means by said fan unit, said relatively cool outside air being drawn into said installation region through a second portion of said front grill means, said housing means including a top that is substantially parallel to the top of the storage compartment, two sides, and a substantially sloping rear wall, said fan blade of said fan unit rotating in a plane that is substantially parallel to said sloping rear wall, the width of said housing means being substantially greater than the height of said housing means.

4,297,851
TEMPERATURE SENSING CIRCUIT WITH HIGH NOISE IMMUNITY
Stephen W. Paddock, Evansville, and Andrew T. Tershak, Centre Township, Vanderburgh County, both of Ind., assignors to Whirlpool Corporation, Benton Harbor, Mich.
Filed Aug. 20, 1979, Ser. No. 68,473
Int. Cl.[3] F25B *49/00;* G01K *3/00*
U.S. Cl. 62—126 9 Claims

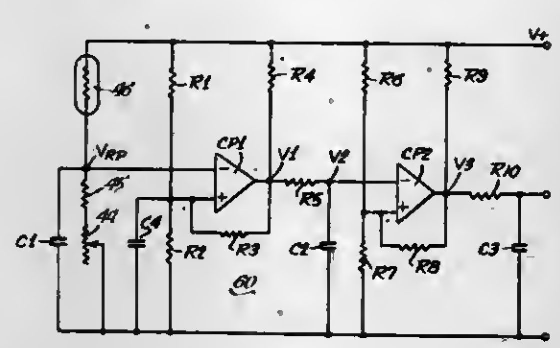

1. In a refrigerator system having refrigeration apparatus for cooling a refrigerated compartment, a temperature sensing circuit for developing a digital signal representative of a temperature above or below a set point, comprising:

an analog temperature sensing device for developing a sensing signal dependent on temperature in said refrigerated compartment;

a first comparison stage coupled to said analog temperature sensing device for developing a first signal to indicate whether the sensing signal is above or below a predetermined first level, the first comparison stage having little or no hysteresis in its response; and

a second comparison stage having an input responsive to said first signal for developing said digital signal to indicate whether the temperature is above or below said set point, the second comparison stage having substantial hysteresis in its response.

4,297,852
REFRIGERATOR DEFROST CONTROL WITH CONTROL OF TIME INTERVAL BETWEEN DEFROST CYCLES
Robert B. Brooks, Louisville, Ky., assignor to General Electric Company, Louisville, Ky.
Filed Jul. 17, 1980, Ser. No. 169,570
Int. Cl.[3] F25D *21/06*
U.S. Cl. 62—153 3 Claims

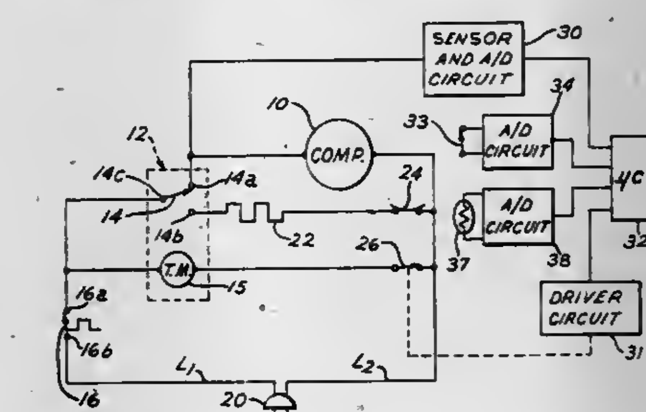

1. In a self-defrosting refrigerator having at least one food storage compartment with an access door thereto and a refrigerant system including a motor-operated compressor, an evaporator for cooling the food storage compartments, thermostatic means for turning the compressor on and off to maintain a desired temperature in the food compartments, and defrost heater means for periodically removing frost build-up from the evaporator, the combination comprising:

timer operated switch means responsive to the thermostatic means (a) during the compressor-on periods to establish a minimum compressor run time between defrost cycles and (b) during the defrost cycle to activate the defrost heater means for a predetermined maximum defrost period;

means for accumulating total compressor run time during the entire elapsed time between defrost cycles;

a door open sensor;

means responsive to the door open sensor for accumulating the amount of time the door is open at least up to a predetermined amount of door-open time;

decision means for providing a first control effect representative of when the accumulation of compressor run time reaches the minimum run time of the timer means and a second control effect representative of when the predetermined amount of accumulated door-open time is reached;

and timer control switch means coupled in electrical circuit with the timer means and effective in response to the decision means to interrupt operation of the timer means in response to the sole presence of the first control effect, and to initiate or continue operation of the timer means in response to the simultaneous presence of both the first and second control effects;

whereby elapsed time between defrost cycles is extended beyond a minimum compressor run time during relatively light usage of the refrigerator wherein usage is measured by door open time.

4,297,853
RETRACTABLE HANDLE FOR AIR VALVE HEAT PUMP
Diane M. Dehli, Jeffersonville, Ind., assignor to General Electric Company, Louisville, Ky.
Filed May 15, 1980, Ser. No. 150,102
Int. Cl.[3] F25B *29/00*
U.S. Cl. 62—325 3 Claims

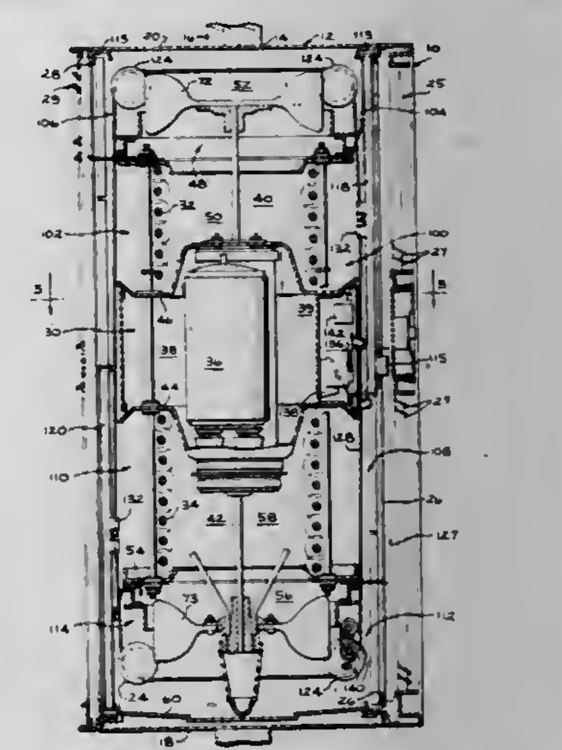

1. An air conditioning apparatus for conditioning air in an enclosure having a wall opening comprising:

a housing having openings on opposite sides thereof adapted to be positioned in said wall opening with the opening on one side of said housing facing the outdoors and the opening on the other side of said housing facing said enclosure;

a central chamber defined by spaced partition means dividing said housing into an upper evaporator compartment and a lower condenser compartment;

a refrigerating system including a condenser in said condenser compartment, an evaporator in said evaporator compartment and a compressor in said central chamber;

a fan shroud partition means in each of said compartments substantially dividing said compartments into inlet and outlet sections, each of said sections having an opening in both the indoor and outdoor facing side of said housing; a fan within each of said shrouds for circulating air through each of said compartments in a direction from said inlet section to said outlet section;

a first damper slidably arranged for vertical movement in the indoor facing side of said housing being associated with the indoor facing openings of said compartments; said damper is dimensioned to cover the openings of one of said compartments, a second damper slidably arranged for vertical movement in the outdoor facing side of said housing being associated with the outdoor facing opening of said compartments, said damper dimensioned to cover the opening of the other of said compartments;

retractable hand operable means on said indoor damper for moving said indoor damper to a selected one of said compartment openings

damper connecting means associated with both of said dampers so that movement of said indoor damper arranged in the indoor facing openings to a position over one of said compartment openings causes movement of said outdoor damper on the outdoor facing openings to a position over the other of said compartment openings;

a handle having a mounting portion and a grip portion, a bracket member having flange portions secured to the

outer wall of said indoor damper and a sleeve portion extending outwardly from said flange portion being spaced from said front wall of said indoor damper a distance sufficient to slidably receive the mounting portion of said handle so that said grip portion of said handle is slidable relative to said damper by a user of said apparatus a distance beyond the outer dimension of said housing side walls to an extended position for allowing said user to move said damper vertically through said connecting means over selected ones of their cooperating compartment openings.

4,297,854
AIR VALVE HEAT PUMP
William J. McCarty, and Bruce L. Ruark, both of Louisville, Ky., assignors to General Electric Company, Louisville, Ky.
Filed Apr. 28, 1980, Ser. No. 144,796
Int. Cl.³ F25B *29/00*
U.S. Cl. 62—325 **22 Claims**

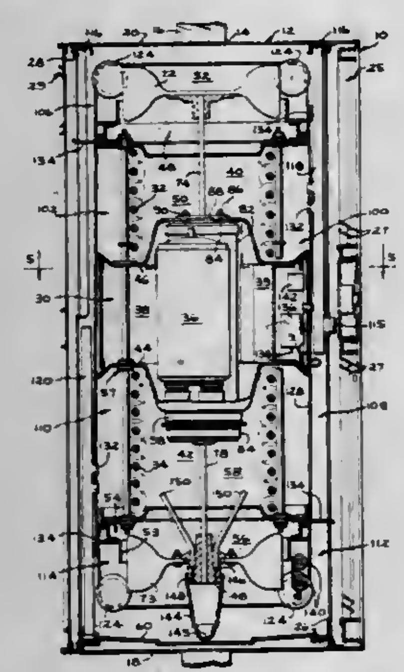

1. An air conditioning apparatus for conditioning air in an enclosure having a wall opening comprising:
a housing having openings on opposite sides thereof adapted to be positioned in said wall opening with the opening on one side of said housing facing the outdoors and the opening on the other side of said housing facing said enclosure;
a central chamber defined by spaced partition means dividing said housing into an evaporator compartment and a condenser compartment;
a refrigerating system including a condenser, an evaporator and a compressor;
a fan shroud partition means in each of said compartments substantially dividing said compartments into inlet and outlet sections, each of said sections having an opening in both the indoor and outdoor facing side of said housing; a fan within each of said shrouds for circulating air through each of said compartments in a direction from said inlet section to said outlet section;
said evaporator and said condenser being of the spine fin type, consisting of one continuous tube member wound spirally so that each heat exchanger is arranged in circular fashion and positioned generally around the fan in the shroud partition within their respective compartments,
means for connecting said partition means in spaced relationship to form a refrigeration system chassis adapted to be received in said housing, said connecting means including members being dimensioned so that said spirally wound evaporator being arranged in said evaporator compartment between the upper central compartment partition means and said evaporator compartment fan shroud partition means is compressed and securely held therebetween and also said connecting members being dimensioned so that said condenser being arranged in said condenser compartment between the lower central compartment partition and said condenser compartment fan shroud partition means is compressed and securely held therebetween and said compressor being arranged in said central chamber to define a system chassis arranged in said housing,
a fan motor mounted in one of said central chamber partitions having a shaft extending into said evaporator compartment for driving one of said fans, and a second fan motor mounted in the other of said central chamber partitions having a shaft extending into said condenser compartment for driving the other of said fans;
a first damper slidably arranged in the indoor facing side of said housing being associated with the indoor facing openings of said compartments; said damper is dimensioned to cover the openings of one of said compartments, a second damper slidably arranged in the outdoor facing side of said housing being associated with the outdoor facing opening of said compartments, said damper dimensioned to cover the opening of the other of said compartments; and
means for selectively positioning said dampers to a first cooling position wherein the indoor facing openings of said evaporator compartment communicate with the enclosure and the outdoor facing openings of said condenser compartment communicate with said outdoors for cooling the air in said enclosure and to a second heating position wherein the indoor facing openings of said condenser compartment communicate with the enclosure and the outdoor facing openings of said evaporator compartment communicate with said outdoors for heating the air in said enclosure.

4,297,855
AIR VALVE HEAT PUMP
William J. McCarty, and Bruce L. Ruark, both of Louisville, Ky., assignors to General Electric Company, Louisville, Ky.
Filed May 21, 1980, Ser. No. 152,263
Int. Cl.³ F25B *29/00*
U.S. Cl. 62—325 **8 Claims**

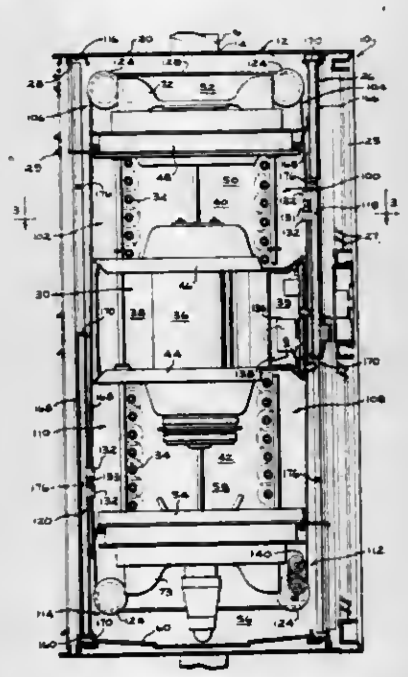

1. An air conditioning apparatus for conditioning air in an enclosure having a wall opening comprising:
a housing having openings on opposite sides thereof adapted to be positioned in said wall opening with the opening on one side of said housing facing the outdoors and the opening on the other side of said housing facing said enclosure;
a central chamber defined by spaced partition means dividing said housing into an evaporator compartment and a condenser compartment;
a refrigerating system including a condenser in said condenser compartment, an evaporator in said evaporator compartment and a compressor in said central chamber;
a fan shroud partition means in each of said compartments substantially dividing said compartments into inlet and outlet sections, each of said sections having an opening in both the indoor and outdoor facing side of said housing; a fan within each of said shrouds for circulating air through each of said compartments in a direction from said inlet section to said outlet section;
a first damper slidably arranged in the indoor facing side of said housing being associated with the indoor facing openings of said compartments; said damper is dimensioned to cover the inlet and outlet section openings of one of said compartments, a second damper slidably arranged in the outdoor facing side of said housing being associated with the outdoor facing opening of said compartments, said damper dimensioned to cover the inlet and outlet section openings of the other of said compartments;
means interconnecting said dampers for selectively positioning said dampers to a first cooling position including;
a plurality of support members positioned in said housing;
a flexible member having a continuous length being arranged on said support members so that a substantially straight portion is arranged adjacent said front and rear facing openings of said housing;
indexing means on said straight portions of said flexible members arranged diametric relative to front and rear facing openings;
retaining means on said front and rear dampers being dimensioned to engage said indexing means for interconnecting said dampers on said flexible member wherein when the first damper is arranged so that the indoor facing inlet and outlet section openings of said evaporator compartment communicate with the enclosure, the second damper is arranged so that the outdoor facing inlet and outlet section openings of said condenser compartment communicate with said outdoors for cooling the air in said enclosure and to a second heating position wherein when the first damper is arranged so that the indoor facing inlet and outlet section openings of said condenser compartment communicate with the enclosure, the second damper is arranged so that the outdoor facing inlet and outlet section openings of said evaporator compartment communicate with said outdoors for removing heat from the outdoor air by cooling the air.

4,297,856
^{3}He-^{4}He DILUTION REFRIGERATOR
Frans A. Staas; Willem van Haeringen, and Adrianus P. Severijns, all of Eindhoven, Netherlands, assignors to U.S. Philips Corporation, New York, N.Y.
Filed Mar. 10, 1980, Ser. No. 128,706
Claims priority, application Netherlands, Mar. 14, 1979, 7902014
Int. Cl.³ F25B *19/00*
U.S. Cl. 62—514 R **3 Claims**

1. A ^{3}He-^{4}He dilution refrigerator for producing very low temperatures, which comprises two chambers respectively situated at different levels, the upper chamber forming a mixing chamber for mixing liquid concentrated ^{3}He and superfluid ^{4}He and the lower chamber forming a segregating chamber for separating concentrated ^{3}He and superfluid ^{4}He; a superleak opening into the mixing chamber for supplying superfluid ^{4}He to the mixing chamber; a connection duct having a lower end opening near the top of the segregating chamber; an auxiliary chamber, the upper end of the connecting duct opening thereinto; a supply duct between the upper part of the auxiliary chamber and the upper part of the mixing chamber for flow of concentrated ^{3}He to the upper part of the mixing chamber; and an outlet duct between the lower part of the mixing chamber

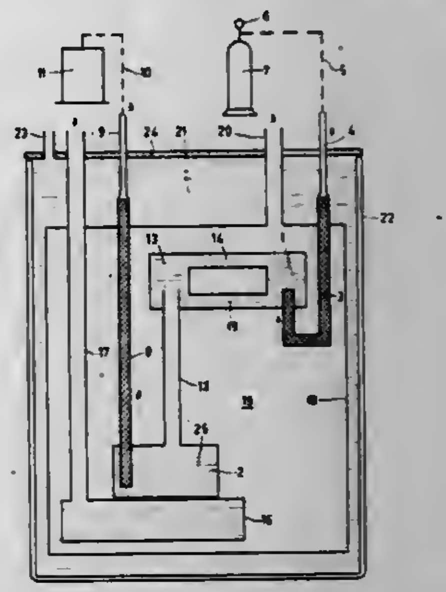

and the lower part of the auxiliary chamber for flow of dilute ^{3}He to the lower part of the auxiliary chamber.

4,297,857
APPARATUS FOR KNITTING TERRY LOOPS ON A CIRCULAR HOSIERY MACHINE
Giovanni Busi, via Tito Speri 116, Botticino Sera, Brescia, Italy
Filed Jul. 30, 1979, Ser. No. 61,897
Claims priority, application Italy, May 2, 1978, 5181 A/78
Int. Cl.³ D04B *9/12*
U.S. Cl. 66—9 R **12 Claims**

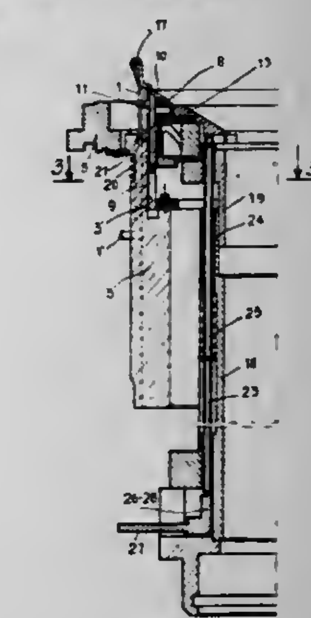

1. Apparatus for knitting terry loops in a fabric on circular hosiery machines with at least one feeding station, comprising a selectively rotatable cylinder having a plurality of axially extending, angularly spaced apart grooves formed therein, a plurality of axially displacable needles individually guided in said grooves, a sinker bed encircling said cylinder, a plurality of radial sinkers carried by said cylinder and cooperating with said needles, means for feeding at least two yarns concurrently to said needles in correspondence with at least one working station, a sleeve positioned in said cylinder, said sleeve having a plurality of longitudinally extending grooves spaced apart angularly over at least a part thereof and a pin punch positioned in an guided by each of said longitudinaly grooves, said pin punches being alternately positioned with said needles of said cylinder, said pin punches each having a butt facing and protruding toward the center of said sleeve and defining a guide path for said butts of said pin punches for the raising and lowering thereof; said pin punches being raised upwardly to form the terry loop of the fabric with at least one of the fed

yarns, the needles of the cylinder being lowered to knit the remainder of the fabric, and cam means positionable vertically and arranged to engage said pin punches whereby in one position of said cam means said pin punches are actuated and in another position of said cam means said pin punches are deactivated.

4,297,858
HIGH DENSITY PILE WARE AND THE PROCESS THEREFOR
Helmar Blasberg, Obertshausen, and Christian Wilkens, Heusenstamm, both of Fed. Rep. of Germany, assignors to Karl Mayer Textilmaschinenfabrik GmbH, Obertshausen, Fed. Rep. of Germany
Filed Sep. 27, 1979, Ser. No. 79,431
Claims priority, application Fed. Rep. of Germany, Oct. 4, 1978, 2843250
Int. Cl.³ D04B *7/12*
U.S. Cl. 66—194 **9 Claims**

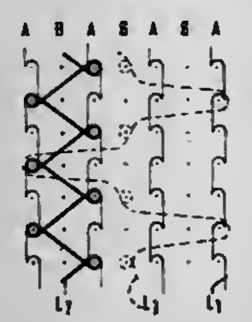

1. A process for preparing pile ware on a needle bed of a warp knitting machine wherein the pile loops formed from one thread system are tied off by stitches of a ground fabric structure formed by at least one other thread system, the improvement which comprises providing at least one ground fabric structure thread which is elastic, said elastic thread having an elastic elongation limit of at least 400% and said elastic thread being worked with an elongation of at least 100% and forming the pile loops by utilizing those needles that are disposed between the needles used for the fabrication of the ground fabric structure.

4,297,859
AUTOMATIC TOWEL DISPENSER
Hugo-Werner Geschka, Düsseldorf, and Bernd Beitecke, Dortmund, both of Fed. Rep. of Germany, assignors to LuK Lamellen and Kupplungsbau GmbH, Bühl, Fed. Rep. of Germany
Filed Jun. 21, 1979, Ser. No. 50,639
Claims priority, application Fed. Rep. of Germany, Jun. 21, 1978, 2827180
Int. Cl.³ A47K *10/30*
U.S. Cl. 68—13 R **4 Claims**

1. An automatic towel dispenser having a housing formed with a delivery slot and an inlet slot and containing a washing and a drying chamber for an endless towel passable therethrough and having a cleaned section available for use extending outside the housing between the delivery slot and the inlet slot, respectively, formed in the housing, means defining a path of travel of the endless towel from the inlet slot to the washing chamber and from the drying chamber to the delivery slot, the housing also containing a first supply chamber for variably stacking a plurality of soiled towel sections of the endless towel in loops therein, the first supply chamber being located between the inlet slot and the washing chamber, as viewed in travel direction of the towel, and the housing further containing a second supply chamber for variably stacking a plurality of cleaned towel sections of the endless towel in loops therein, the second supply chamber being located between the drying chamber and the delivery slot, as viewed in travel direction of the towel, the travel path of the endless towel including a travel path portion for the soiled towel sections through the washing and drying chambers wherein the soiled towel sections are, respectively, washed and dried, respective travel path portions extending from above into the first and the second supply chamber for depositing, respectively, the soiled and the cleaned towel sections therein from above, and respective travel path portions extending upwardly from below out of the first and the second supply chamber for withdrawing the respective soiled and cleaned towel sections upwardly from below an overlying loop thereof, past the respective supply of towel sections and out of the respective supply chambers, the improvement therein comprising guide means disposed in an

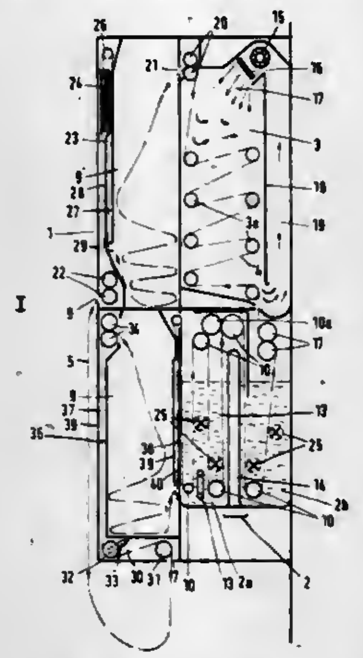

upper region of the second supply chamber, the inlet slot being located in the towel dispenser below the first supply chamber, and the delivery slot being located in a middle region of the towel dispenser, said guide means defining a reversing part of the travel path for reversing upward travel of the towel sections in the second supply chamber into downward travel thereof out of the delivery slot and means for guiding the towel sections out of the delivery slot and reintroducing them, in the form of a loop extending around a region adjacent the middle region of the towel dispenser, into the housing through the inlet slot.

4,297,860
DEVICE FOR APPLYING FOAM TO TEXTILES
Joseph A. Pacifici, LaGrange, Ga., and Jerry L. White, Riverview, Ala., assignors to West Point Pepperell, Inc., West Point, Ga.
Filed Jul. 23, 1980, Ser. No. 171,277
Int. Cl.³ D06B *1/08*
U.S. Cl. 68—200 **13 Claims**

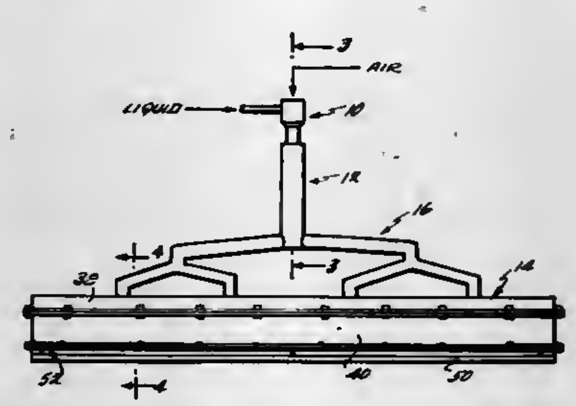

1. A device for applying foam to textiles, comprising:
a source of foam;
an applicator joined to said source for receiving foam therefrom, said applicator comprising first and second portions separated by an apertured plate, said first portion being joined to the source for receiving foam therefrom, said foam being spread across the applicator by the plate and passing through the apertures therein to said second portion, said second portion containing porous material and having a configuration which converges towards an elongated discharge orifice whereby said foam is uniformly distributed across the orifice.

4,297,861
LOCK COVER
James R. Dykes, 540 E. 60th St., Savannah, Ga. 31405
Filed Nov. 13, 1979, Ser. No. 93,739
Int. Cl.³ E05B *67/38*
U.S. Cl. 70—55 **8 Claims**

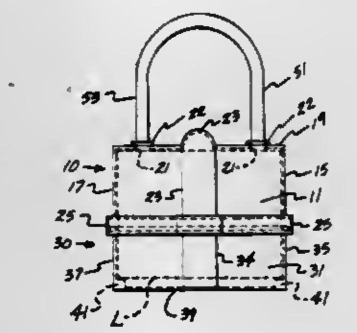

1. An improved cover for a padlock to protect the body of same from the elements comprising:
(a) a bottom cover portion to be received around a lower portion of the lock body, said bottom cover portion having a bottom wall with an elongated thin wall membrane section therein, said bottom wall having means associated therewith to space a lower end of a lock body therefrom; said cover portion further having connector means thereon; and
(b) a top cover portion to be received around an upper portion of the lock body, said top cover portion having connector means thereon mateable with connector means on said bottom portion to removably secure said top and bottom portions around said lock body to enclose same, aid top cover portion having a top wall defining two spacially separate shackle leg receiving openings, said openings receiving said shackle legs in a snug fitting relationship, said top cover portion further having means thereon to permit variation of the space between said shackle receiving openings, whereby the snug fitting relationship between the openings and the shackle legs is maintained when small variation exists in space between the shackle legs.

4,297,862
LOCK MECHANISM WITH REMOVABLE CYLINDER HOLDER
Paul G. Solovieff, 14291 Browning Ave., Apt. 52, Tustin, Calif. 92680
Filed Feb. 23, 1979, Ser. No. 14,418
Int. Cl.³ E05B *9/08*
U.S. Cl. 70—129 **18 Claims**

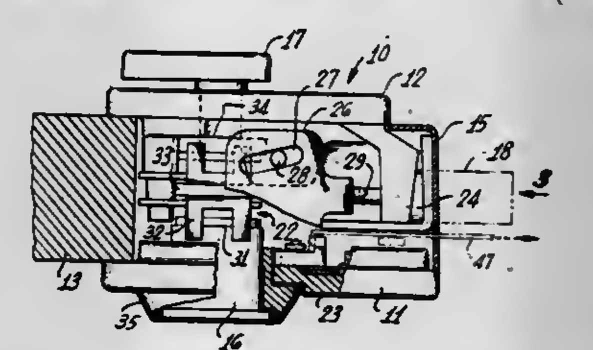

1. A door lock including a pair of escutcheons engaging opposite sides of a door, a bolt reciprocable between an extended position in which it projects from a swingable edge of said door and a retracted position in which it is disposed within said door, a face plate overlying said edge and having a bolt aperture therein through which said bolt can move, an externally threaded lock cylinder including a rotatable core adapted to receive a key, and a linkage connecting said lock cylinder to said bolt, wherein the improvement comprises:
an internally threaded ring-shaped holder in which said cylinder is threadedly mounted, said holder having at least one lug projecting outwardly therefrom adjacent said core;
an aperture of generally circular outline in one of said escutcheons in which said holder is removably received and is rotatable between a secured position and a released position;
retaining means disposed between said escutcheons for normally securing said holder to said apertured escutcheon and for releasing said holder upon actuation thereof, said retaining means comprising a latch member movable toward and away from said holder for engagement with said lug, and spring means for resiliently urging said latch member toward said holder, said latch member and said lug having cam surfaces that are mutually engageable upon rotation of said holder; and
a release aperture in said face plate by which said retaining means is accessible for actuation thereof to disengage said latch member from said lug by moving said latch member against the urging of said spring means, thereby permitting said holder to be rotated from said secured position to said released position.

4,297,863
ANTILOCK-FREEZING DEVICE
Wilfried Glock, Liebenzeller Str. 11/1, 7032 Sindelfingen, Fed. Rep. of Germany
Filed Sep. 17, 1979, Ser. No. 75,973
Claims priority, application Fed. Rep. of Germany, Sep. 23, 1978, 2841450
Int. Cl.³ E05B *19/00*
U.S. Cl. 70—395 **6 Claims**

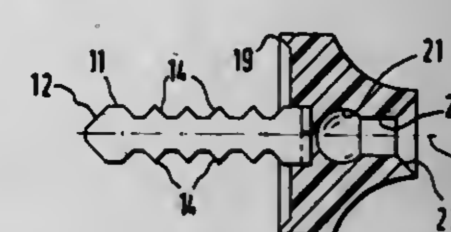

1. A device for preventing motor vehicle locks having a key slot from freezing, comprising:
a flat strip section which fits in width and height into the key slot like the portion of a key associated with this lock, and
a grip stud provided at one end of the flat strip section in which said one end of the flat strip section is anchored,
said flat strip section being made of metal and having corrosion protection,
said grip stud comprising two parts and a detent connection in the form of a press-stud connection, operable by hand, for connecting and separating said grip stud parts to and from each other,
said detent connection being rotationally symetrical,
said flat strip section being enclosed in one of said parts.

4,297,864
KEY HOLDER
Hanns W. Beier, 853 Scarsdale Rd., Crestwood, N.Y. 10707
Filed May 28, 1980, Ser. No. 154,004
Int. Cl.³ A47G *29/10*
U.S. Cl. 70—456 B **7 Claims**

1. A key holder for a key comprising a snap lock permanently attachable to the key the snap lock having a configured slot therein, and a spring clip, the spring clip including a re-

tainer engageable in the slot and a ring attached to the retainer, the ring having one free end biased toward but bendable away

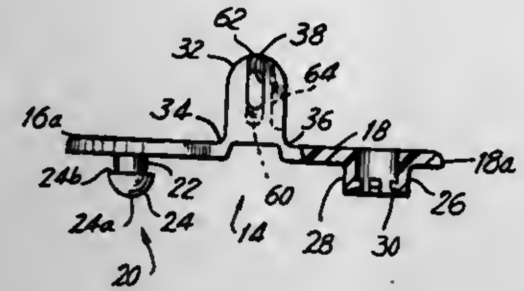

from the snap lock, to enable ready attachment to and removal from a key ring.

4,297,865
METAL STRIP DOWNCOILERS
William Smith, Burlington, Canada, assignor to The Steel Company of Canada, Ltd., Hamilton, Canada
Filed Mar. 17, 1980, Ser. No. 130,718
Claims priority, application Canada, Mar. 30, 1979, 11180
Int. Cl.³ B21C *47/00*
U.S. Cl. 72—146 4 Claims

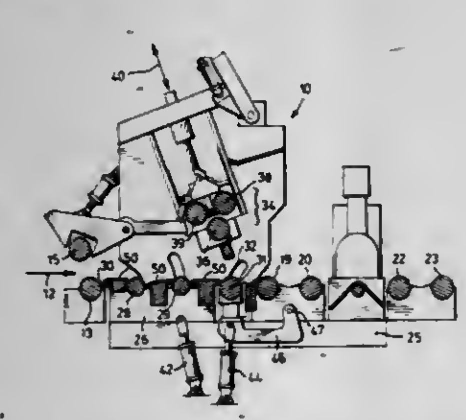

1. Apparatus for selectively (a) coiling a hot steel transfer bar or (b) allowing the bar to pass uncoiled through the apparatus, comprising:

frame means supporting a plurality of aligned rollers for transferring a bar in one direction,

bend roller means located above said plurality of rollers and being adapted to apply a down curvature to a transfer bar passing therethrough,

ramp means upstream of the bend roller means with respect to said one direction and adapted selectively (a) to be placed in the path of a transfer bar to cause the latter to be deflected upwardly to enter said bend roller means, or (b) to allow the transfer bar to pass along said rollers under said bend roller means,

a displaceable roller downstream of the bend roller means and parallel with the rest of the rollers, said displaceable roller being mounted for displacement normal to its axis in a direction having a vertical component, whereby the roller may be moved between a first position in which it lies even with the rest of the rollers, and a second position in which it is raised above the level of the rest of the rollers, said displaceable roller defining an angle with two rollers sequentially downstream of it, the vertex of the angle being at the adjacent downstream roller, whereby the angle changes from 180° to an obtuse angle as the displaceable roller moves from its first to its second position, said displaceable roller in said second position defining, with said two sequentially downstream rollers, a cradle in which the convolutions of a coiling transfer bar can be contained, the cradle being capable of enlargement to accommodate the expanding coil by lowering the displaceable roller toward its first position.

4,297,866
ASYMMETRICAL SHAPING OF SLIT SEGMENTS OF MESHES FORMED IN DEFORMABLE STRIP
Randall T. Sakauye, Mississauga; John V. Marlow, Oakville; Gordon H. Laurie, Mississauga, and Theodore J. Seymour, Oakville, all of Canada, assignors to Cominco Ltd., Vancouver, Canada
Filed Sep. 19, 1979, Ser. No. 77,080
Claims priority, application Canada, Aug. 1, 1979, 333003
Int. Cl.³ B21D *31/02*
U.S. Cl. 72—186 12 Claims

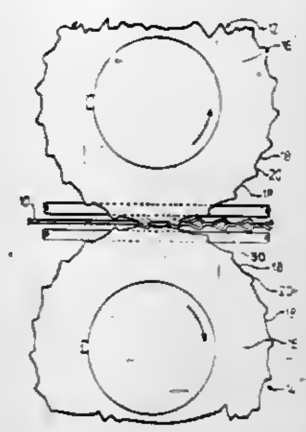

1. A method of forming elongated slit segments in deformable strip comprising concurrently slitting and preforming said strip by intermeshing, substantially convexly shaped tool surfaces each having a linear leading portion and a linear trailing portion joined by a rounded apex portion, said linear leading and trailing portions collinear with and generally defining portions of the sides of a triangle having a base wherein said base has a length equal to the length of the strip being slit and the length of the side of the triangle corresponding to and collinear with the leading portion is less than the length of the side of the triangle corresponding to and collinear with the trailing portion and the angle formed between the said side of the triangle corresponding to the leading portion and the base is not greater than 90°.

4,297,867
PIPE END EXPANDING OR CONTRACTING PROCESS UTILIZING IRONING
Masaru Masaki, Aichi; Yoshinori Ito; Akihiko Inoue, both of Toyota, and Munetaka Toda, Kariya, all of Japan, assignors to Toyota Jidosha Kogyo Kabushiki Kaisha, Toyota, Japan
Filed Jun. 29, 1979, Ser. No. 53,524
Claims priority, application Japan, Nov. 15, 1978, 53-140608
Int. Cl.³ B21D *22/00*
U.S. Cl. 72—347 7 Claims

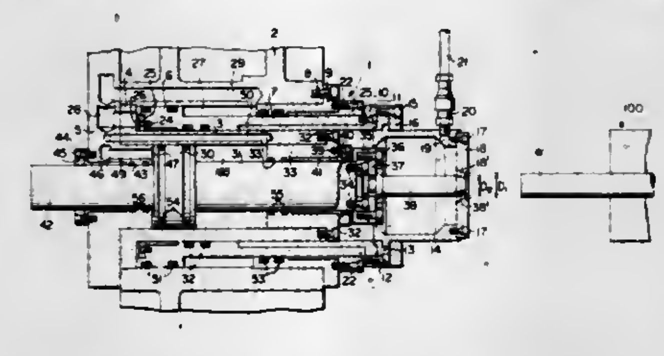

1. A process for altering the diameter uniformly over a certain axial length of an end portion of a cylindrical pipe which has a cylindrical inside surface and a cylindrical outside surface, comprising the steps, in the specified order, of:

(a) applying a diameter modification element having a cylindrical surface of at least said certain axial length to one of said cylindrical surfaces of the pipe over said certain axial length, so as to modify the diameter of said end portion; and

(b) maintaining said diameter modification element in the position it assumed at the completion of step (a), and

(c) squeezing said diameter-modified end portion of the pipe between said cylindrical surface of said diameter modification element, and an ironing element which is applied to the other said cylindrical surface of the pipe by moving said ironing element axially over said diameter-modified end portion with a clearance between itself and said cylindrical surface of said diameter modification element which is less than the thickness of said diameter-modified end portion.

4,297,868
PIPE SIZING AND GROOVING APPARATUS
John J. Hunter, 1410 Willow Pond, Abilene, Tex. 79602
Filed Oct. 4, 1979, Ser. No. 81,778
Int. Cl.³ B21D *39/04*
U.S. Cl. 72—402 6 Claims

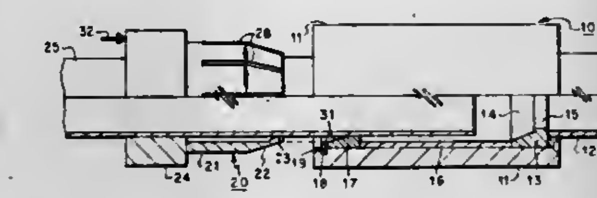

1. Apparatus for forming an annular recess in the external surface of a pipe comprising:

(a) a first cylindrical body concentrically positionable and axially moveable over said pipe, said cylindrical body having an internal diameter in at least the central portion thereof larger than the external diameter of said pipe;

(b) an inwardly projecting lip on the internal surface of said cylindrical body adjacent one end thereof with the external diameter of said first body increasing axially from said one end thereof forming a tapered external surface adjacent said one end thereof;

(c) a plurality of axial slots in said cylindrical body extending through said lip; and

(d) means for radially compressing said one end of said cylindrical body whereby said lip is pressed into and forms an annular groove in said pipe, said means for radially compressing said one end of said first cylindrical body comprising a ring surrounding said pipe, said ring having a tapered internal surface mating with said tapered external surface when said tapered external surface is axially telescoped within said ring wherein said ring is a sizing ring maintained within a sizing tool, the smallest internal diameter of said sizing ring corresponding to the desired external diameter of said pipe.

4,297,869
APPARATUS FOR FABRICATING PULLEY RIMS
William G. Oldford, Lexington, Mich., assignor to U.S. Industries, Inc., Oak Brook, Ill.
Filed Sep. 10, 1979, Ser. No. 73,617
Int. Cl.³ B21D *43/04*
U.S. Cl. 72—405 17 Claims

1. An apparatus for manufacturing a pulley rim from a cylindrical pulley rim blank comprising

a first press having a pair of opposed dies with frusto-conical portions thereon;

a second press having a pair of opposed dies with frusto-conical portions thereon;

clamping means for transporting said pulley rim blank from said first press to said second press;

said claming means including a clamping assembly and means for moving said clamping assembly between a first position wherein said rim blank is axially aligned with said first press and a second position wherein said rim blank is axially aligned with said second press; and

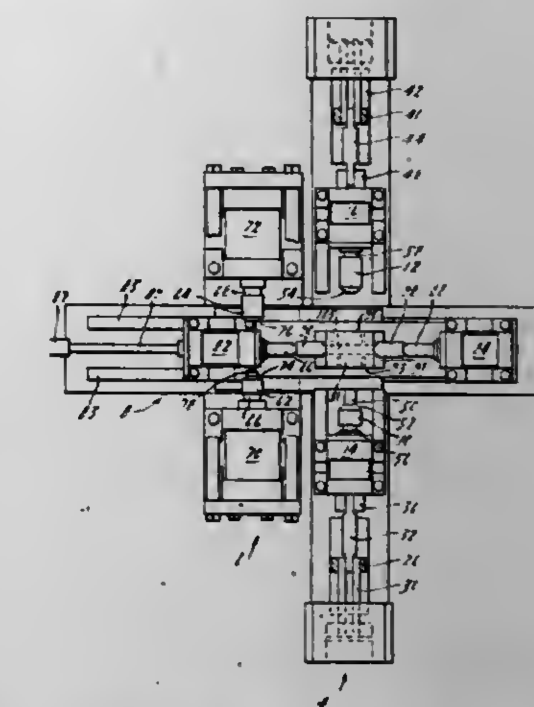

a frame supporting said first press, second press, and said clamping means for transporting said pulley rim blank.

4,297,870
HYDRAULIC PRESS WITH INTEGRAL KNOCKOUT AND STROKE CONTROL
Eugene W. Pearson, Orinda, Calif., and Wilbur G. Short, Browns, Ill., assignors to Canron Corp., Oakland, Calif.
Division of Ser. No. 875,353, Mar. 20, 1978, Pat. No. 4,242,901.
This application Mar. 9, 1979, Ser. No. 19,184
Int. Cl.³ B21J *7/46*
U.S. Cl. 72—443 6 Claims

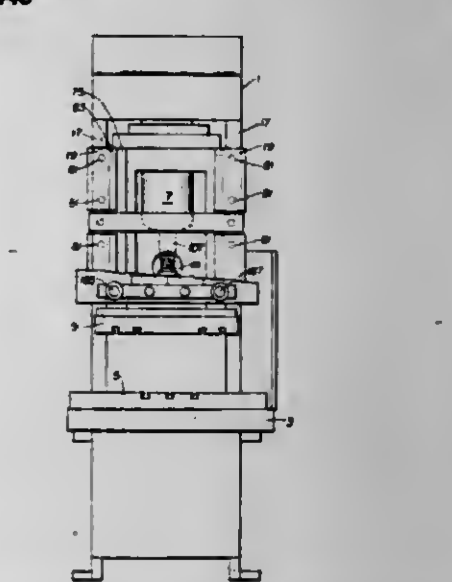

1. A press comprising a frame including a bed, a bolster on said bed for holding one of a pair of complementary dies, reciprocal variable speed drive means for producing a work stroke and a return stroke supported by said frame above said bed for carrying a bolster to which may be affixed the other of said complementary dies, said drive means including a hydraulic piston/cylinder assembly for providing said work and return stroke, means for selecting various speed changes of said upper die during said work stroke and said return stroke and means for controlling the duration of said various speeds relative to time, whereby die travel at a specific speed is a function of time of travel at such speed.

4,297,871
GAS SAMPLING DEVICES
Basil M. Wright, 95, Uxbridge Rd., Rickmansworth, Hertfordshire, and Thomas P. Jones, 20, South Rd., Sully, Glamorgan, both of England
Filed Nov. 5, 1979, Ser. No. 91,502
Claims priority, application United Kingdom, Nov. 3, 1978, 43194/78
Int. Cl.³ G01N *1/14*
U.S. Cl. 73—23 14 Claims

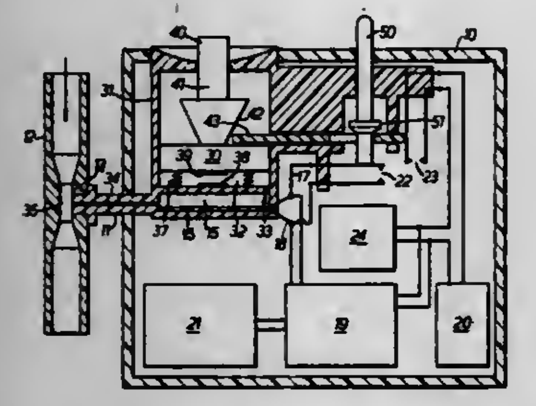

1. A breath sampling and testing device, comprising a sampling chamber, detector means for detecting a constituent of the gas in said chamber, an open ended breathing tube having a branch passage, a gas displacement element associated with a resilient means and arranged to draw a sample of gas through said branch passage into said sampling chamber, means for sensing a reduction in flow rate in said breathing tube, and arranged automatically to release said displacement element so as to draw a sample of gas through said branch passage into said chamber.

4,297,872
VIBRATION TYPE TRANSDUCER
Kynichi Ikeda, and Motoyoshi Ando, both of Musashino, Japan, assignors to Yokogawa Electric Works, Ltd., Tokyo, Japan
Filed Dec. 31, 1979, Ser. No. 108,477
Claims priority, application Japan, Jan. 11, 1979, 54-2089
Int. Cl.³ G01N *9/00*; G01L *11/00*; G01H *13/00*
U.S. Cl. 73—32 A 8 Claims

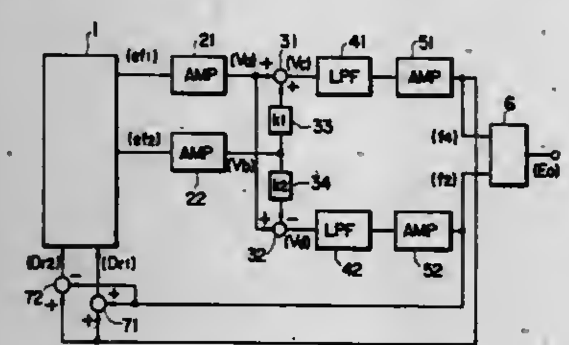

1. A vibration type transducer comprising:
a vibrator,
vibration drive means for vibrating said vibrator in at least two vibration modes,
at least two vibration detection means for detecting frequency signals corresponding to said vibration modes of said vibrator,
an adder circuit coupled to said vibration detection means for adding said frequency signals of said vibration detecting means,
a subtracter circuit coupled to said vibration detection means for subtracting said frequency signals of said vibration detection means, and
an arithmetic circuit coupled to said adder circuit and said subtracter circuit for providing an output signal corresponding to a physical quantity to be measured.

4,297,873
PLUGGING DEVICE
Hiromichi Nei; Ryoichi Ohtani, both of Yokohama; Iwao Ohshima, Kawasaki, and Yuji Horikawa, Tokyo, all of Japan, assignors to Tokyo Shibaura Denki Kabushiki Kaisha, Kawasaki, Japan
Filed Jun. 5, 1979, Ser. No. 45,661
Claims priority, application Japan, Jun. 13, 1978, 53-71094
Int. Cl.³ G01N *15/00*
U.S. Cl. 73—61 LM 11 Claims

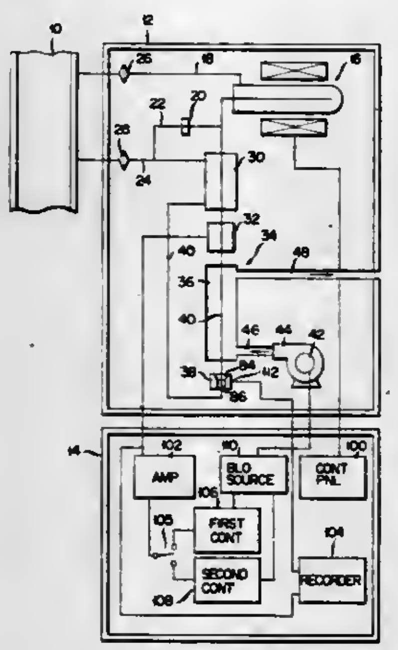

1. A plugging device comprising a pump for introducing liquid metal from a main pipe, a cooler for cooling the liquid metal introduced by said pump, a plugging orifice having an orifice hole through which said cooled liquid metal is passed, said orifice hole having a taper portion spreading out toward the upper-course side and a straight pipe portion with a restricted aperture on the lower-course side adjacent thereto, whereby impurities dissolved in said liquid metal are precipitated mainly at said straight pipe portion to increase the flow resistance, a flow meter for measuring the flow rate of said liquid metal, a thermometer for measuring the temperature of the liquid metal flowing through said plugging orifice, and a control block for controlling the cooling capability of said cooler in response to a flow rate signal delivered from said flow meter, said cooler including a motor to rotate at a speed proportional to a DC voltage supplied from said control block and a blower driven by said motor, so that the plugging temperature of said liquid metal is determined from the temperature measured by said thermometer.

4,297,874
APPARATUS FOR MEASURING A PERCENTAGE OF MOISTURE AND WEIGHING OF A SHEET-LIKE OBJECT
Shinichi Sasaki, 5-17-19,, Tokiwa, Urawa-shi, Saitama-ken, Japan
Filed Oct. 26, 1979, Ser. No. 88,570
Int. Cl.³ G01G *7/00*; G01N *27/06*; G01R *27/00*
U.S. Cl. 73—73 10 Claims

1. Apparatus for measuring the moisture content and weight of a sheet-like object comprising:
(a) a single cavity resonator having a pair of metal boxy sections with openings arranged spaced from and facing each other thereby providing a gap therebetween for insertion of said sheet-like object,
(b) means for generating microwave signals,
(c) means for coupling said microwave signals to one of said metal boxy sections,
(d) a microwave detector,
(e) means for coupling microwave signals from the other of said metal boxy sections to the detector, said coupled microwave signals being attenuated and shifted in frequency at a resonance condition of said cavity resonator when said sheet-like object is inserted within said gap,
(f) said detector generating resonance signals upon detection of a resonance condition, and
(g) circuit means connected to said detector for receiving said resonance signals, said circuit means comprising

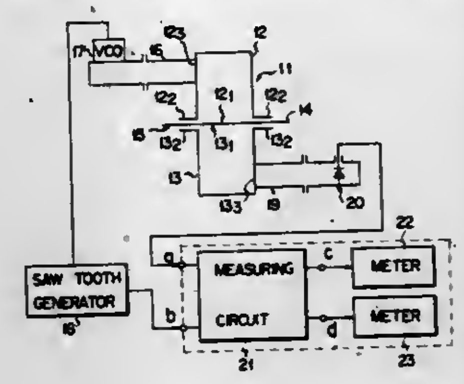

(1) means for detecting the amount of attenuation of said resonance signals for substantially determining the moisture content of said sheet-like object, and
(2) means for detecting the resonance frequency of said resonance signals for determining the weight of said sheet like object.

4,297,875
APPARATUS FOR INTRODUCING A FORCE TO BE MEASURED INTO A BENDING ROD
Ernst Kuhnle, and Josef Schwarz, both of Balingen, Fed. Rep. of Germany, assignors to Bizerba-Werke Wilhelm Kraut KG, Fed. Rep. of Germany
Filed Apr. 15, 1980, Ser. No. 140,605
Claims priority, application Fed. Rep. of Germany, Apr. 18, 1979, 2915553
Int. Cl.³ G01L *1/22*
U.S. Cl. 73—862.62 8 Claims

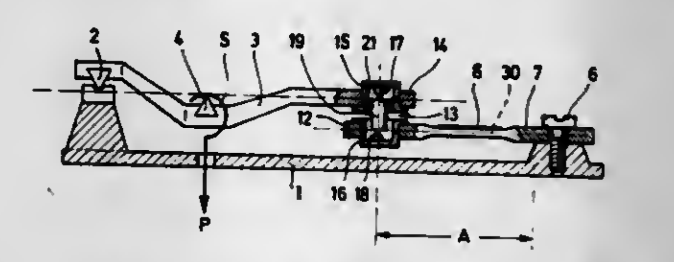

1. Apparatus for introducing a force to be measured from a force transfer element into the free end of a bending rod held rigidly at one end, said apparatus comprising means for guiding the force transfer element in the direction of said bending rod, a first rounded contact surface on the force transfer element, a second rounded contact surface on the bending rod, a coupling element having first and second flat parallel spaced substantially horizontal surfaces and interposed between the first and second contact surfaces with its first surface bearing against the first contact surface and its second surface bearing against the second surface, and means for holding the coupling element substantially centrally and resiliently relative to the first and second contact surfaces.

4,297,876
ULTRASONIC TIRE TESTING APPARATUS
Arnold A. Weiss, Minneapolis, Minn., assignor to AMF Incorporated, Santa Ana, Calif.
Filed Aug. 29, 1979, Ser. No. 70,720
Int. Cl.³ G01M *17/02*
U.S. Cl. 73—146 4 Claims

1. In an ultrasonic tire casing inspection system of the type in which a vehicle tire casing to be inspected is disposed in air in a non-contact relationship between at least one ultrasonic wave transmitting transducer and at least one ultrasonic wave receiving transducer, said receiving transducer providing an output to an amplifier device, a method for preventing transmitted ultrasonic energy waves which travel through the air and around said tire casing from interfering with the analysis of the ultrasonic energy wave patterns reaching said receiving transducer by passing through said tire casing, comprising the steps of:
(a) transmitting a pulse of ultrasonic energy, the rise time of said pulse being short compared to the transit time of soundwaves in traveling from said transmitting transducer through the air, around the casing, to said receiving transducer, the pulse width being generally equal to twice the transit time of sound waves traveling between said transmitting transducer and said tire casing;

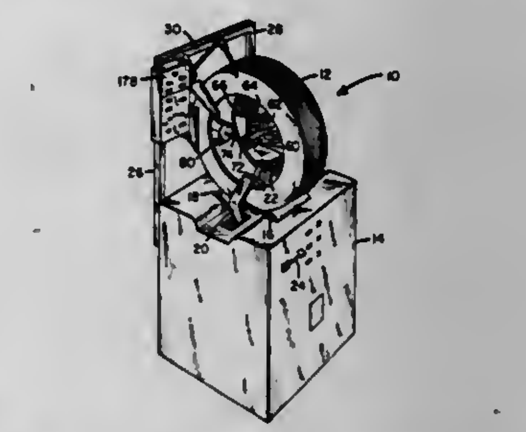

(b) sampling the output of said amplifier device for a predetermined time following the arrival at said receiving transducer of ultrasonic waves passing through said tire casing, but before the arrival of said ultrasonic energy waves which travel through the air around said tire casing; and
(c) repeating steps (a) and (b) at a rate sufficiently low such that the ultrasonic wave signals reaching said receiving transducer from a prior transmitted pulse is less than a predetermined amplitude.

4,297,877
FORCE MEASURING HUB
Reinhard Stahl, Wolfsburg, Fed. Rep. of Germany, assignor to Volkswagenwerk AG, Wolfsburg, Fed. Rep. of Germany
Filed Dec. 27, 1979, Ser. No. 107,579
Claims priority, application Fed. Rep. of Germany, Dec. 28, 1978, 2856453
Int. Cl.³ G01L *5/16*
U.S. Cl. 73—146 3 Claims

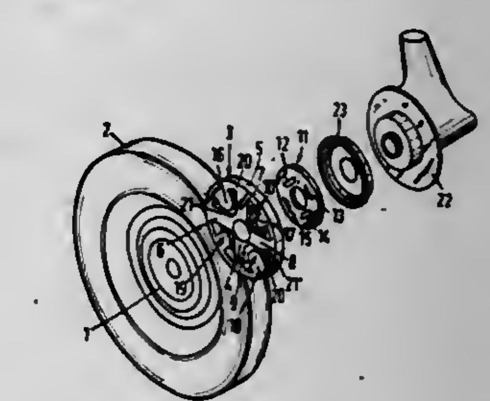

1. In a force measuring hub for measuring forces and/or torques acting in at least the circumferential direction of a wheel-like body supported on a carrier, the force measuring hub including a first annular component adapted for a coaxial attachment to the wheel-like body; the first annular component further having a plurality of radial webs provided with elongation-sensing strips; a second annular component adapted for a coaxial attachment to the carrier; connecting means for opera-

tively coupling the second annular component and the first annular component such that the radial webs lie in a force path passing between the wheel-like body and the carrier; the improvement wherein said first annular component is a flat disc comprising an inner zone adapted to be secured to the wheel-like body and an outer rim surrounding said inner zone; said radial webs being arranged in a single plane between said inner zone and said outer rim; said first annular component further comprising a plurality of extensions attached to said outer rim and oriented radially inwardly therefrom in said single plane into respective spaces defined between adjoining said radial webs; each said extension terminating at a clearance from said inner zone; said second annular component being disc-shaped and including mounting projections extending into respective clearances between said inner zone and the respective extension of said first annular component.

4,297,878

MEASURING COEFFICIENT OF RADIAL DAMPING OF TIRE WALL SEGMENT

Dusan C. Prevorsek, and Young D. Kwon, both of Morristown, N.J., assignors to Allied Corporation, Morris Township, Morris County, N.J.

Filed Mar. 7, 1980, Ser. No. 128,074

Int. Cl.³ G01M *17/02*

U.S. Cl. 73—146 **12 Claims**

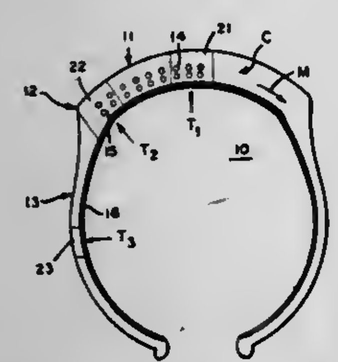

1. A method of measuring the coefficient of radial damping per unit length of a tire wall at a predetermined frequency of strain which comprises:

(a) applying a cyclic sinusoidal strain component at a predetermined frequency and at a predetermined amplitude to a tire wall segment, said strain being applied in a direction substantially normal to the segment at the point where strain is applied; and

(b) continuously measuring the stress on the tire wall segment at a point spaced from the point where strain is applied in a direction along the segment, the stress being measured in a direction substantially parallel to the direction in which the strain component is applied; the coefficient radial damping per unit length of wall being calculable as

$(1.5\Delta E)/(\pi m(\Delta S)^2\text{-}OM)$

where m is the normal distance between the application of strain and the measurement of stress; ΔS is the predetermined amplitude; OM is the angular velocity of the cyclic sinusoidal strain component and ΔE is the measured energy loss per cycle.

4,297,879

WELL LOGGING CORRELATION METHOD AND APPARATUS

Anthony P. Howells, 12503 Mile Dr., Houston, Tex. 77065; Ronald E. Diederich, 4015 Swarthmore, Houston, Tex. 77005, and Jorg A. Angehrn, 2606 Brammel Timbers La., Houston, Tex. 77068

Filed Jul. 2, 1979, Ser. No. 54,072

Int. Cl.³ E21B *49/00*

U.S. Cl. 73—152 **98 Claims**

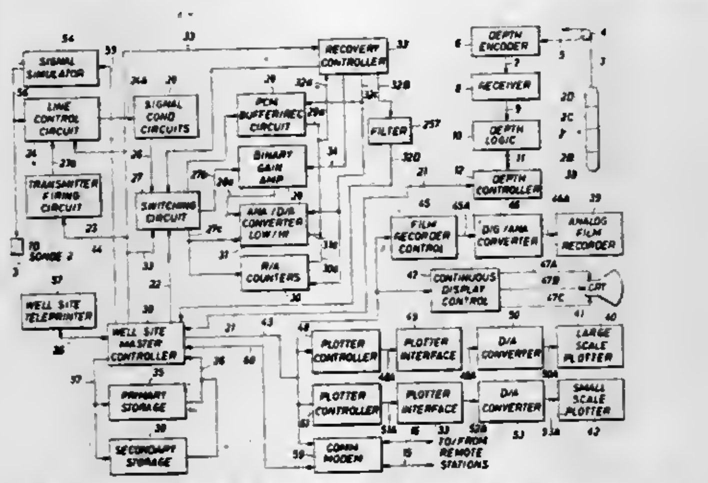

37. A method of investigating the character of subsurface earth materials and the like traversed by a borehole, comprising

deriving an electrical command signal as a function of borehole depth,

deriving a first electrical measurement of said earth materials in response to said command signal,

deriving a second electrical measurement of said earth materials, and

adjusting said command signal in functional relation with said first and second measurements.

4,297,880

DOWNHOLE PRESSURE MEASUREMENTS OF DRILLING MUD

Eugene L. Berger, Houston, Tex., assignor to General Electric Company, Philadelphia, Pa.

Filed Feb. 5, 1980, Ser. No. 119,041

Int. Cl.³ E21B *47/10*

U.S. Cl. 73—155 **4 Claims**

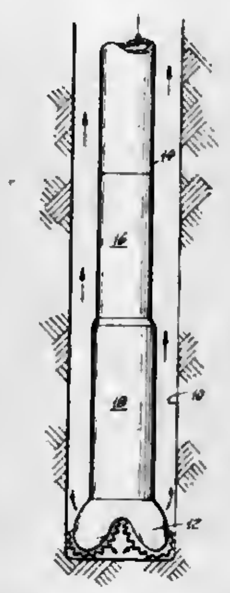

1. Intrusion detection means for detecting the intrusion into a well bore of material having a density different from that of the drilling mud comprising:

a drill string having an instrumentation sub as a part thereof; said instrumentation sub having a passage for drilling mud therein;

a first pressure transducer in said instrumentation sub exposed to the pressure of the drilling mud in said passage and producing an electrical signal representative thereof; and

a second pressure transducer in said instrumentation sub exposed to the pressure of the drilling mud outside said instrumentation sub and producing an electrical signal representative thereof.

4,297,881

HOT-WIRE FLOW RATE MEASURING APPARATUS

Takao Sasayama, Hitachi; Yutaka Nishimura, Katsuta; Shinichi Sakamoto, Hitachi, and Masayuki Miki, Katsuta, all of Japan, assignors to Hitachi, Ltd., Tokyo, Japan

Filed Sep. 24, 1979, Ser. No. 78,468

Claims priority, application Japan, Sep. 22, 1978, 53-117051

Int. Cl.³ F02M *51/00;* G01F *1/68*

U.S. Cl. 73—204 **39 Claims**

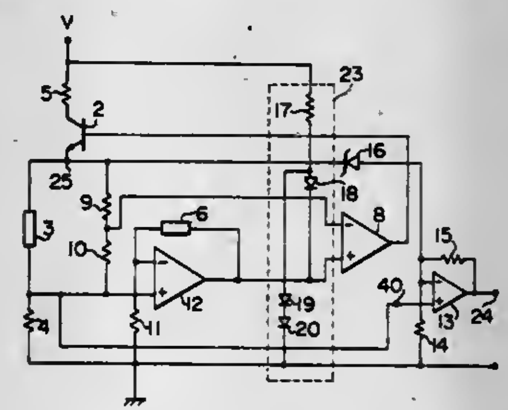

1. A hot-wire flow rate measuring apparatus comprising:

a first series circuit including a first thermo-sensitive resistive element placed in the fluid path of fluid and a first resistive element,

a circuit for dividing the voltage across said first thermo-sensitive resistive element;

a second thermo-sensitive resistor for temperature compensation placed in the fluid path of fluid;

means for detecting the difference between the output voltage of said voltage dividing circuit and the output voltage of said second thermo-sensitive resistor for temperature compensation;

means for controlling current fed to said first series circuit in accordance with the detected voltage from said detecting means; and

output means for producing a voltage in accordance with the voltage across said resistive element, and

wherein the output voltage of said output means indicates a flow rate of fluid, and further comprising

a second resistive element connected in series with said second thermo-sensitive resistive element to form a second series circuit therewith; and

means for controlling the voltage across said second series circuit so that the voltage across said first resistive element and the voltage across said second resistive element are equal to each other, and

wherein the voltage across said second series circuit is applied to said detecting means as said output voltage across said thermo-sensitive resistive element for temperature compensation.

4,297,882

WHEEL BALANCER TRANSDUCER MOUNT WITH IMPROVED SIGNAL TO NOISE RATIO

Donald B. Curchod, Saratoga, and Donald R. Sherman, San Jose, both of Calif., assignors to Autotron Equipment Corporation, Mountain View, Calif.

Filed Apr. 24, 1980, Ser. No. 143,430

Int. Cl.³ G01M *1/16*

U.S. Cl. 73—460 **6 Claims**

1. In a wheel balancer of the type including a shaft having a proximal end and a remote end remote from said proximal end, means for mounting a wheel/tire assembly on said shaft adjacent said proximal end, a drive train coupled to said remote end for imparting rotation to said shaft and said wheel/tire assembly, said drive train coacting with said shaft along an imaginary line that extends in a given direction radially of said shaft, proximal and remote bearing blocks disposed adjacent respective said ends of said shaft, and bearings mounted in respective said bearing blocks for supporting said shaft for rotation relative thereto, improved mounting apparatus for said bearing blocks comprising a rigid support member defining a substantially nondeformable surface, means for supporting said surface on the side of said shaft opposite said given direction and substantially perpendicular to said imaginary line, a remote passive mount for supporting said remote bearing block in spaced apart relation to said surface, said remote passive mount being disposed in coaxial alignment with said imaginary line so

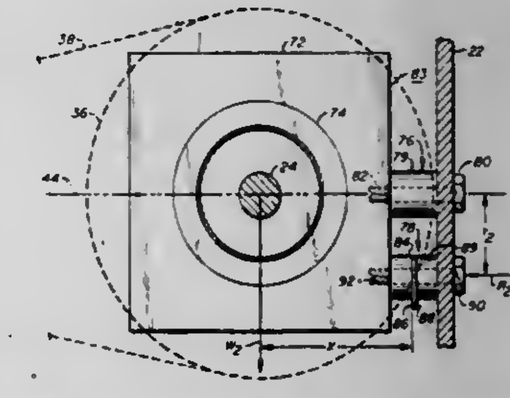

that vibratory motion imparted to said remote bearing block by said drive train produces no significant moment about said remote passive mount, a remote active mount extending between said surface and said remote bearing block at a point spaced from said remote passive mount by a first distance so that said remote active mount is subjected to alternate compressive and tensive forces in response to rotation of an unbalanced wheel/tire assembly mounted on the second end of said shaft, said remote active mount including transducer means for producing an electric signal that varies as a function of said compressive and tensive forces, and means for mounting said proximal bearing block to said rigid support member, said proximal bearing block mounting means including transducer means for producing an electrical signal indicative of forces imparted to said proximal bearing block in response to rotation of an unbalanced wheel/tire assembly mounted on the second end of said shaft.

4,297,883

RATE OF TURN INDICATOR

E. Paul Shannon, Rte. 2, Box 249, Killen, Ala. 35645

Filed Dec. 13, 1979, Ser. No. 103,354

Int. Cl.³ G01P *9/02;* G01C *19/42*

U.S. Cl. 73—504 **34 Claims**

1. Rate of turn indicator comprising:

a. support member including at least one drive coil and at least two pickup coils positioned about an axis with respect to each other on said member;

b. bearing means mounted on said axis of said support member;

c. magnetic gyro wheel means including at least two magnet domains of alternating poles positioned about the periphery of a flexible material and axially supported in said bearing means; and,

d. signal processing means connected to said pickup coil and

including visual indicating means whereby said magnetic gyro wheel induces currents in said pickup coils subject to

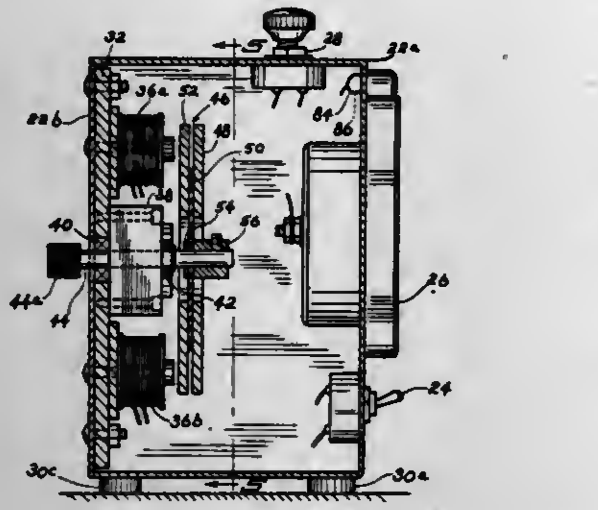

the rate of turn of said vessel from a course of travel thereby being visually displayed on said indicating means.

4,297,884

METHOD OF AND APPARATUS FOR THE MEASUREMENT OF AT LEAST ONE MECHANICAL PROPERTY OF AN ELASTIC MATERIAL

Jean-Luc Leveque, Montfermeil; Laurent Rasseneur, Thorigny-sur-Marne; Jean P. de Rigal, Claye Souilly, and Gilbert Gras, Aulnay Sous Bois, all of France, assignors to L'Oreal, Paris, France

Filed Aug. 10, 1979, Ser. No. 65,443

Claims priority, application France, Aug. 31, 1978, 78 25149

Int. Cl.³ G01N *3/38, 33/48*

U.S. Cl. 73—579 12 Claims

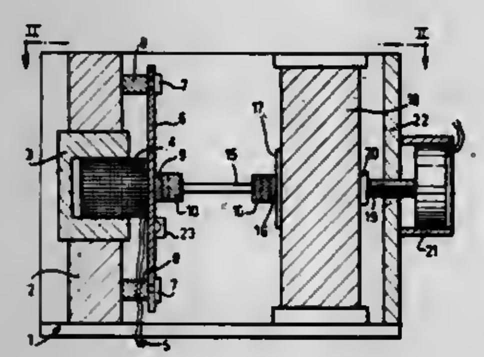

1. Apparatus for measuring a mechanical property of an elastic material comprising, a fixed frame; a mobile assembly carried by the frame; an electromagnetic operating device having at least one coil for vibrating the mobile assembly relative to the frame, said mobile assembly having a first securing element rigid therewith for securing the sample to be tested; a second securing element carried by the frame whereby the sample to be tested may be disposed and held between the said first and second securing elements; means for displacing the second securing element in the frame for, in use of the apparatus, changing the mechanical tension of a sample secured between the said first and second securing elements; an electronic circuit associated with the electromagnetic operating device for providing a supply of electricity at the appropriate frequency to said coil; at least one device for the receipt of data provided by the aforesaid electronic circuit, and force measuring means mounting the second securing means for providing a signal indicative of the tension in a sample being tested.

4,297,885

ACOUSTIC EMISSION FOR DETECTION AND MONITORING OF CRACK INITIATION AND PROPAGATION IN MATERIALS

Norman W. Hein, Jr., and Donald H. Oertle, both of Ponca City, Okla., assignors to Conoco Inc., Ponca City, Okla.

Filed Oct. 24, 1979, Ser. No. 87,918

Int. Cl.³ G01N *29/04*

U.S. Cl. 73—587 16 Claims

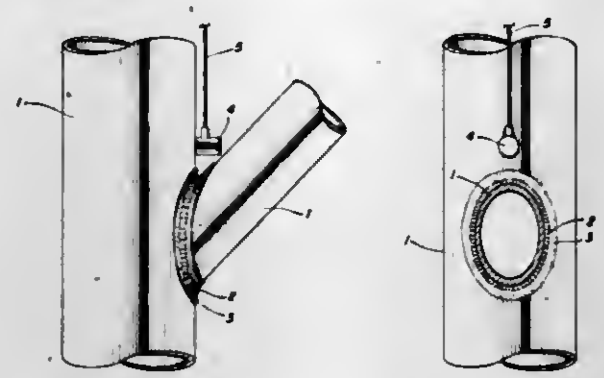

1. A method for detecting and monitoring initiation and propagation of cracks in materials comprising

(a) adhering an acoustical emitter selected from the group consisting of brittle plastics, glass rods and strips, fiberglass, cadminum metal, tin metal, micarta, boron/epoxy reinforced strips, boron/aluminum reinforced strips, graphite/epoxy liminates and silicon carbide fiber laminates to the area to be monitored, and

(b) monitoring for acoustical signals emitted by the adhered material, indicating crack initiation or propagation into the adhered material.

4,297,886

ULTRASONIC FLAW DETECTOR FOR IMMERSION TESTING OF ARTICLES

Yakov F. Anikeev, ulitsa Stanichnaya, 82, kv. 2; Nikolai N. Panikov, ulitsa S. Kovalevskoi, 8, kv. 87, and Viktor N. Ripny, ulitsa Pravdy, 113, kv. 20, all of Dnepropetrovsk, U.S.S.R.

Filed Jun. 15, 1979, Ser. No. 49,485

Int. Cl.³ G01N *29/04*

U.S. Cl. 73—642 6 Claims

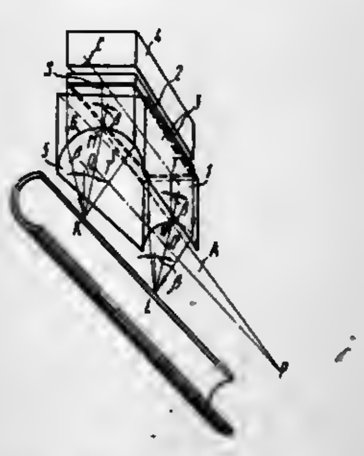

1. In an ultrasonic flaw detector for immersion testing of articles of the type having a focusing plane concave lens, provided with a concave surface, the focusing lens having a trapezoidal-shape, a piezoelectric plate having a symmetrical trapezoidal form with the electrodes applied to the surface thereof capable of being fed with high-frequency electric oscillations for causing the piezoelectric plate to generate ultrasonic

oscillations, and an ultrasonic oscillation attenuation unit, said attenuation unit and said piezoelectric plate being placed in immediate contact with each other and said plate and said lens being placed in immediate contact with each other forming a contact plane, said focusing planoconcave lens, said piezoelectric plate and said ultrasonic altenuation unit being arranged in the aforesaid order so that the concave surface of said lens and said piezoelectric plate have a common main plane of symmetry, the improvement comprising:

said concave surface of said lens forming a conical surface, said contact plane being parellel to the genetrix of said conical surface and being in the form of a trapezoid,

said lens having non-parallel side planes normal to said contact plane and being positioned on opposite sides of said concave surface with said concave surface extending arcuately therebetween, and said non-parallel sides being perpendicular to the bases of said trapezoidally-shaped lens, such that the non-parallel sides of the trapezoidally-shaped lens are formed in the same plane as the side planes of said lens normal to the said contact plane and passing through the genetrix of the conical surface equidistantly from said common main plane of symmetry, and

the directrix of said conical surface being located at the side of the larger base of said trapezoid.

4,297,887

HIGH-SENSITIVITY, LOW-NOISE, REMOTE OPTICAL FIBER

Joseph A. Bucaro, Herndon, Va., assignor to The United States of America as represented by the Secretary of the Navy, Washington, D.C.

Filed Feb. 19, 1980, Ser. No. 122,648

Int. Cl.³ G02B *5/14*

U.S. Cl. 73—655 9 Claims

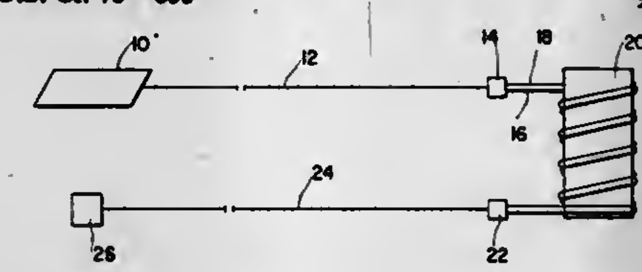

1. An acoustic signal sensing device comprising in combination:

acoustic signal sensor means, comprising a pair of optical fibers, at least one of which has acoustical sensitivity, for sensing acoustic signals by their action on the fiber to vary light beam velocity in the fiber and thus produce, in response to an impinging acoustical signal, a differential phase change between light beams simultaneously traversing said optical fibers;

optical-fiber lead-line means for conducting light beams to and from said sensor means;

light-splitting and combining means connected between said sensor means and said lead-line means for splitting an input light beam coming from said lead-line means into two components and feeding each component to a different one of said sensor optical fibers, and for combining the output beams from said optical fibers into a single resultant light beam and feeding it back to said lead-line means; and

detector means for deriving the resultant light beam from said lead-line means and producing an output signal proportional to said differential phase change between the outputs of said optical fibers in said sensor means;

at least one of said optical fibers is formed into a coil;

both said optical fibers have different acoustic sensitivities, are equal in length and are formed into coils each having two ends, an input end connected to said light-splitting and combining means, and a second end,

said lead-line means comprises a single optical fiber,

said sensor device further including mirror means to which said second ends of said optical fibers are connected for reflecting light beams in said fibers back to their input ends.

4,297,888

STABILITY CONTROL SYSTEM FOR VIBRATION TEST DEVICE

Hiromu Hirai, Yatabemachi, and Shin Hamano, Shimoinayoshi, both of Japan, assignors to Hitachi, Ltd., Tokyo, Japan

Filed Feb. 26, 1980, Ser. No. 124,958

Claims priority, application Japan, Feb. 28, 1979, 54-21857

Int. Cl.³ G01N *29/00*

U.S. Cl. 73—664 3 Claims

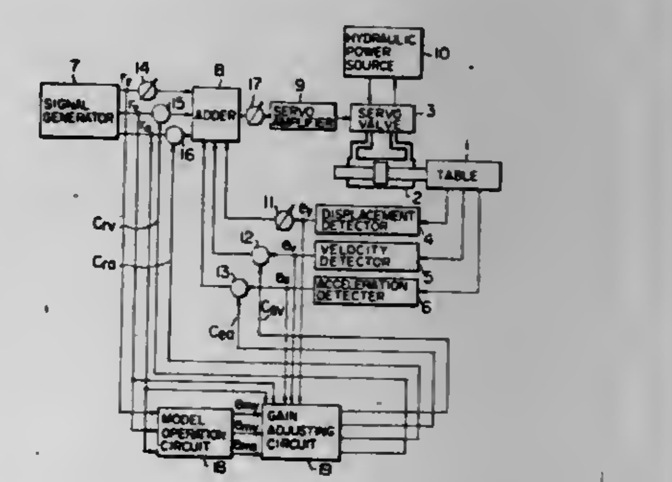

1. In a vibration test device comprising a vibration table, a vibrator for driving said vibration table, a servo-valve for controlling the direction and the flow rate of pressurized fluid supplied to said vibrator, a servo-amplifier for power-amplifying a voltage signal applied thereto and applying the amplified signal to said servo-valve in the form of a current signal, signal generator means for producing command voltage signals representing target values corresponding to states of said vibration table including the displacement, velocity and acceleration thereof, a feedback circuit for converting into state-representing voltage signals feedback elements representing the states of selected one of said vibration table and said vibrator, said states including the displacement and at least one of the velocity and acceleration of said selected one of said vibration table and said vibrator, and an adder for calculating the sum of said command voltage signals produced from said signal generator means and said state-representing voltage signals produced from said feedback circuit and for applying an output voltage signal representing said sum to said servo-amplifier; a stability control system comprises a first gain-adjusting means provided at the input side of said adder, a second gain-adjusting means provided at the output side of said feedback circuit, a model operation circuit for simulating a model response corresponding to the state-representing values of said vibration table in response to said command voltage signals produced from said signal generator means so as to produce model response signals, and a gain-adjusting circuit for applying gain-adjusting signals to said first and second gain-adjusting means in response to said model response signals produced from said model operation circuit, said state-representing voltage signals produced from said feedback circuit and said command voltage signals produced from said first generator means.

4,297,889
ROLL-UP TYPE U-TUBE MANOMETER
Steven O. Buchanan, and James W. Phillips, both of Michigan City, Ind., assignors to Dwyer Instruments, Inc., Michigan City, Ind.
Filed May 27, 1980, Ser. No. 153,030
Int. Cl.^{3} G01L *7/18*
U.S. Cl. 73—747 **6 Claims**

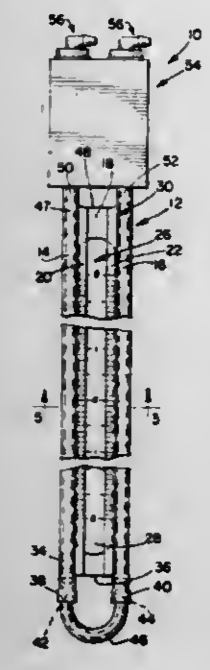

1. In a roll-up flexible manometer comprising an elongate body formed from a transparent flexible plastic material to define a pair of spaced apart parallel tubes separated by an integral web that extends substantially the length of the tubes and defines a forwardly facing side and a rearwardly facing side, means for connecting the lower ends of said tubes, an elongate flexible scale positioned along the forward side of the web between and paralleling the tubes, and means for slidably mounting the scale for movement longitudinally of said body for effecting zero adjustment of the scale,
the improvement wherein said means for slidably mounting the scale comprises:
a pair of substantially opposed flanges integral with said body and extending longitudinally of same in overlaying closely spaced relation to the forwardly facing side of the web,
one of said flanges being integral with one of the tubes and the other of said flanges being integral with the other tube,
said flanges defining projecting edges that parallel said body and are spaced apart transversely of the body to expose the scale,
said scale having its respective side edges slidably received under the respective flanges,
said flanges and the portion of the web underlying same embracing the respective side edges of said scale substantially continuously therealong,
whereby when the body is rolled up, for storage, the scale uniformly rolls up with same free of crinkling and indentations.

4,297,890
PRESSURE TRANSDUCER
Bertil Hök, Uppsala, Sweden, assignor to Siemens Aktiengesellschaft, Berlin & Munich, Fed. Rep. of Germany
Filed May 21, 1980, Ser. No. 151,771
Claims priority, application Fed. Rep. of Germany, Jun. 7, 1979, 2923122
Int. Cl.^{3} G01L *9/02*
U.S. Cl. 73—753 **5 Claims**

1. A pressure transducer for generating an electrical signal which corresponds to a liquid pressure to be measured within a liquid vessel, said transducer comprising:
an exterior tube (1) having a measurement chamber (11) at a measurement end thereof for direct communication with a liquid pressure to be measured,
an interior tube (2) disposed longitudinally within said exterior tube and having a closed end (5) remote from said chamber and having an open end opening at said chamber for direct fluid communication with a liquid in said chamber,
liquid supply means (6) within said exterior tube and communicating with said chamber,
said liquid supply means providing for the filling of said chamber with a pressure transmission liquid while a gas is entrapped within said interior tube,

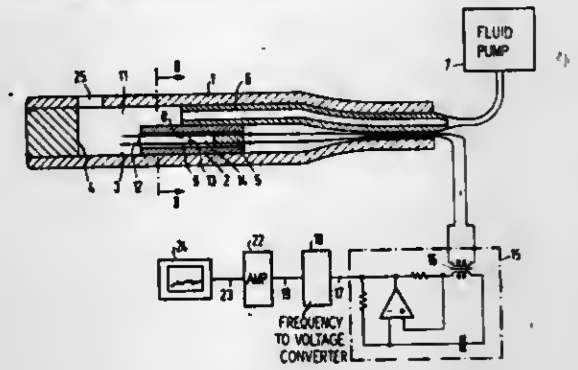

said interior tube (2) providing a pressure measuring cell and having sensing means for supplying an electric signal which is a function of the gas volume within said interior tube and thus of the liquid pressure in said chamber,
said exterior tube (1) having an exterior wall with a lateral opening (25) communicating with said chamber transversely opposite from the open end of said interior tube, and
means comprising said lateral opening (25) for placing said chamber (11) and the open end of said interior tube (2) in direct fluid communication with the liquid whose pressure is to be measured.

4,297,891
APPARATUS AND METHOD FOR PROTECTING A TRANSDUCER
Wayne J. Falcon, Duncan, Okla., assignor to Halliburton Services, Duncan, Okla.
Filed Jan. 11, 1980, Ser. No. 111,242
Int. Cl.^{3} G01L *7/08*
U.S. Cl. 73—756 **5 Claims**

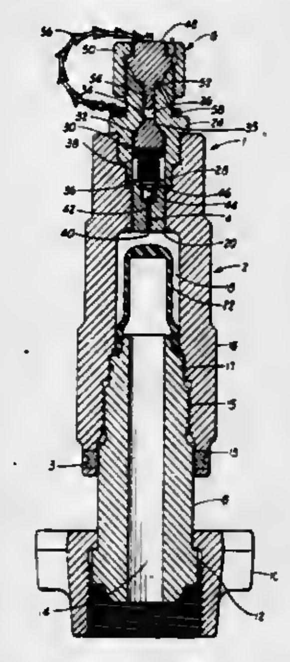

1. A system for protecting a transducer connected thereto by damping, through a pressurized fluid, a signal to be converted by the transducer, said system comprising:
a transducer protector apparatus, including:
a housing, including:

a first connector means for connecting said housing with the transducer, said second connector means having an aperture defined therethrough;
a fluid-containing cavity defined within said housing; and
a transducible signal transferring means disposed within said fluid-containing cavity for receiving the transducible signal from the source and for transmitting it to the fluid in said fluid-containing cavity; and
damping means for damping the signal transmitted by said transferring means, said damping means including:
a bore having a predetermined diameter defined in said housing, said bore communicating said fluid-containing cavity with said aperture in said second connector means;
a pin having a predetermined diameter which is less than the predetermined diameter of said bore, said pin disposed within said bore so that a space exists between said pin and the wall of said bore; and
a fluid contained in said space for providing a continuous fluid path through which the transducible signal transmitted by said signal transferring means can dampingly pass around said pin to the aperture of said first connector means; and
means for pressurizing the fluid in said cavity and in the space betwen said bore and said pin, said means for pressurizing the fluid including:
a container having a body of the fluid contained therein;
a duct having a first end thereof disposed in said body of fluid;
a valve having a first end connected to a second end of said duct;
a three-ended connector means having a first end connected to a second end of said valve and a second end connected to said second connector means of said housing; and
a pump connected to a third end of said three-ended connector means for pumping fluid between said container and said protector apparatus so that the fluid within said protector apparatus is thereby pressurized.

4,297,892
PROCESS AND APPARATUS FOR THE MEASUREMENT OF THE ANISOTROPY VALUE OF FORM CHANGES IN NORMAL DIRECTION IN SHEET METALS
Ferenc Nagy; Ferenc Szabo, and Zoltan F. Szücs, all of Szekesfehervar, Hungary, assignors to Magyar Aluminiumipari Tröszt, Budapest, Hungary
Filed Nov. 27, 1979, Ser. No. 97,795
Int. Cl.^{3} G01N *3/08*
U.S. Cl. 73—826 **2 Claims**

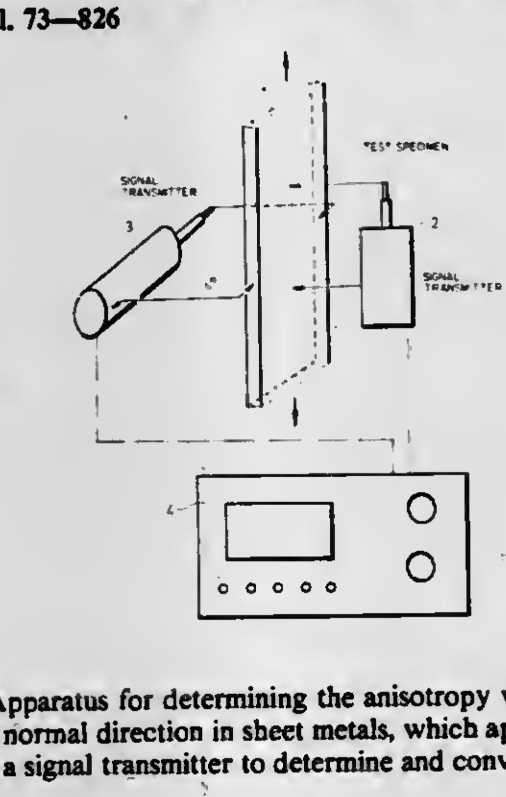

2. Apparatus for determining the anisotropy value changes in the normal direction in sheet metals, which apparatus comprises a signal transmitter to determine and convert longitudinal changes in dimension into electric signals, a signal comparator to accept one or more predetermined reference signals corresponding to predetermined anisotropy values and compare them with signals from the signal transmitter, a switching unit operable by the signal from the signal transmitter, identical with or showing a known difference from one of the predetermined reference signals to pass a signal to a display unit to show the appropriate anisotropy value corresponding to the anisotropy value of the predetermined reference signal which operates the switching unit.

4,297,893
METHOD AND APPARATUS FOR MEASURING FLOW CHARACTERISTICS OF MOVING FLUID STREAM
Larry J. Weinstein, Littleton, Colo., assignor to Johns-Manville Corporation, Denver, Colo.
Filed Feb. 27, 1980, Ser. No. 125,303
Int. Cl.^{3} G01F *13/00*
U.S. Cl. 73—861 **20 Claims**

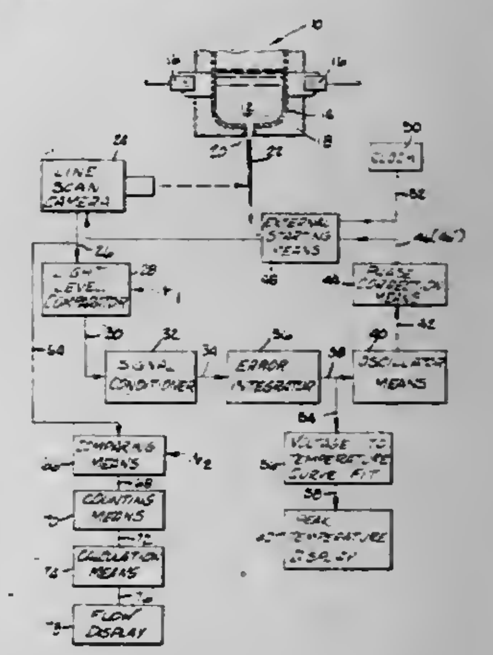

1. A method for estimating flow properties of a moving mass, comprising:
arranging a plurality of sensors in a predetermined array,
exposing said sensors to energy emanating from said mass, each sensor having an output proportional to energy sensed by said sensors;
measuring the output of said sensors at timed intervals,
comparing the output of each sensor with a first value,
varying said time intervals in response to said comparison to ensure that the maximum output of any one sensor is measured at a magnitude which is substantially equal to said first value,
obtaining a count indicative of the number of sensor outputs above a second value, and
generating the magnitude of said flow properties using said count and said intervals.

4,297,894
MASS FLOW SENSOR
Hatsuo Nagaishi, Yokosuka, and Toru Kita, Yokohama, both of Japan, assignors to Nissan Motor Co., Ltd., Yokohama, Japan
Filed Sep. 5, 1979, Ser. No. 72,695
Claims priority, application Japan, Sep. 8, 1978, 53/110396
Int. Cl.^{3} G01F *1/86*
U.S. Cl. 73—861.03 **7 Claims**

1. A mass flow sensor comprising a Karman flow detector arranged in a fluid flow path, said flow detector including a vortex generator and a vortex detector generating a detector signal in response to detected periods of generated vortices, and an air density detector including temperature and pressure responsive means for generating a signal proportional to pres-

sures and temperatures of said fluid, said temperature and pressure responsive means comprising an elastic member defining a reference pressure chamber enclosing a standard gas and a comparison pressure chamber into which is introduced said fluid in said fluid flow path, and a rod connected to said elastic member and movable in response to movements of said elastic member, means responsive to a position of said rod to produce an output voltage proportional to said movement of said elastic

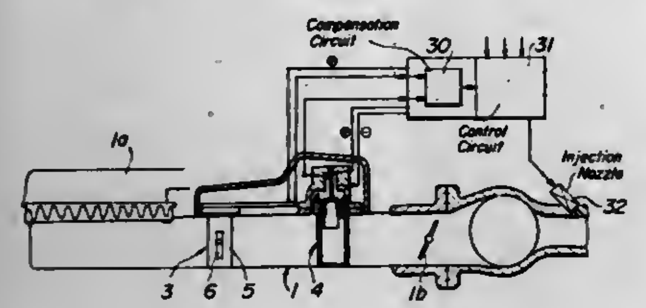

member, and means responsive to said output voltage for compensating said vortex detector signal to obtain a fluid density dependent mass flow signal, wherein said fluid density detector and said flow detector have a common width and are aligned with each other on a common longitudinal axis in said fluid flow path, said detector being spaced apart from each other by a distance that is an integral multiple of a distance between successive Karman vortices.

4,297,895
FIELD REPLACEABLE ELECTRODE ASSEMBLY FOR MAGNETIC FLOWMETER
Felix J. Gryn, Hatfield, Pa., assignor to Emerson Electric Co., St. Louis, Mo.
Filed Aug. 9, 1979, Ser. No. 65,167
Int. Cl.^{3} G01F *1/58*
U.S. Cl. 73—861.12 **6 Claims**

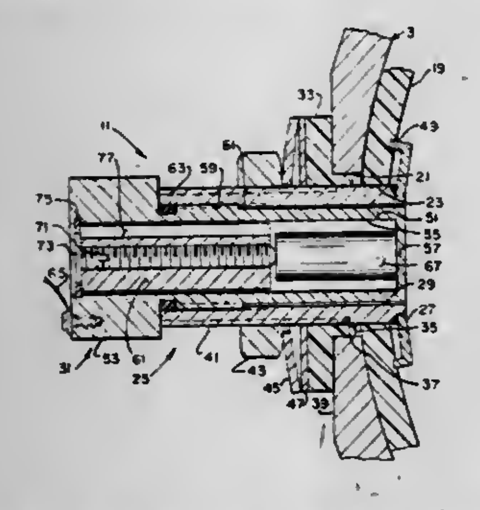

1. An electrode assembly for a magnetic flowmeter or the like adapted to be sealably installed on or removed from a meter body or the like, said meter body having a liner on the inside thereof of suitable electrical insulation material and an opening therethrough for accommodating said electrode assembly, said electrode assembly comprising a fitting adapted to be sealably secured to said meter body and to extend outwardly therefrom, said fitting having an axial bore therethrough and an enlarged head on its inner end, said head having a lip projecting therefrom for sealable engagement with said lining all around said head, said lip being so shaped as to conform to the curvature of the portion of the meter body proximate said fitting thereby to prevent rotation of said fitting about its longitudinal axis relative to said meter body, said assembly further comprising spring means for urging said fitting outwardly from said meter body, thereby urging said lip into engagement with said liner, and an electrode adapted to be inserted in and removed from said bore from the exterior of said meter body, said electrode being held within said bore in a sensing position in which it is in sensing relation with fluid flowing through said meter body, and means for sealing said electrode with respect to said fitting.

4,297,896
FIELD REPLACEABLE ELECTRODE ASSEMBLY FOR MAGNETIC FLOWMETER
George H. May, Philadelphia, Pa., assignor to Emerson Electric Co., St. Louis, Mo.
Filed Aug. 9, 1979, Ser. No. 65,169
Int. Cl.^{3} G01F *1/58*
U.S. Cl. 73—861.12 **11 Claims**

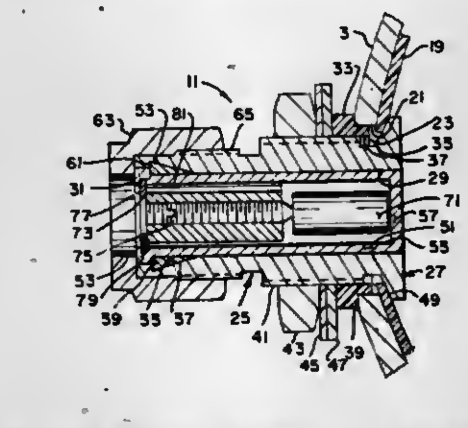

1. An electrode assembly adapted for a magnetic flowmeter or the like to be sealably installed on or removed from a meter body or the like, said meter body having a liner on the inside thereof of suitable electrical insulation material and an opening therethrough for accommodating said electrode assembly, said electrode assembly comprising a fitting adapted to be sealably secured to said meter body and to extend outwardly therefrom, said fitting having an axial bore therethrough, said assembly further comprising an electrode adapted to be inserted in and removed from said bore from the exterior of said meter body, said electrode being held within said bore in a sensing position in which it is in sensing relation with fluid flowing through said meter body, and means for sealing said electrode with respect to said fitting, said seal comprising a collar slidably received on the exterior of said electrode, said collar having a tapered outer surface, said fitting having a seat engageable with said tapered outer surface of said collar, said electrode having a shoulder engageable with said collar, said electrode assembly further comprising a cap threadably engageable with said fitting and with said electrode for forcing said sealing collar into sealing engagement with said seat and with said electrode and for holding said electrode into said fitting in its sensing position.

4,297,897
FIELD REPLACEABLE ELECTRODE ASSEMBLY FOR MAGNETIC FLOWMETER
James E. Young, Harleysville, Pa., assignor to Emerson Electric Co., St. Louis, Mo.
Filed Aug. 9, 1979, Ser. No. 65,170
Int. Cl.^{3} G01F *1/58*
U.S. Cl. 73—861.12 **6 Claims**

1. An electrode assembly adapted to be sealably installed on a meter body or the like, said meter body having a liner on the inside thereof of suitable electrical insulation material and an opening therethrough for accommodating said electrode assembly, said electrode assembly comprising a fitting adapted to be inserted through said opening and to extend outwardly from said meter body, said fitting having an axial bore therethrough, an enlarged head on the end thereof disposed within said meter body, and means for holding said head in sealable engagement with said liner, said assembly further comprising an electrode adapted to be inserted in and removed from said bore from the exterior of said meter body, said electrode being held within said bore in a sensing position in which it is in sensing relation with fluid flowing through said meter body, means for sealing said electrode with respect to said fitting, said bead of said fitting and a portion of said electrode in sensing relation with

the fluid flowing through said meter body being so structured as to be self-cleaned by the flow of fluid thereover, said head having a first surface adapted to sealably engage said liner proximate said opening and a second surface facing generally inwardly toward the center of said meter body, said second

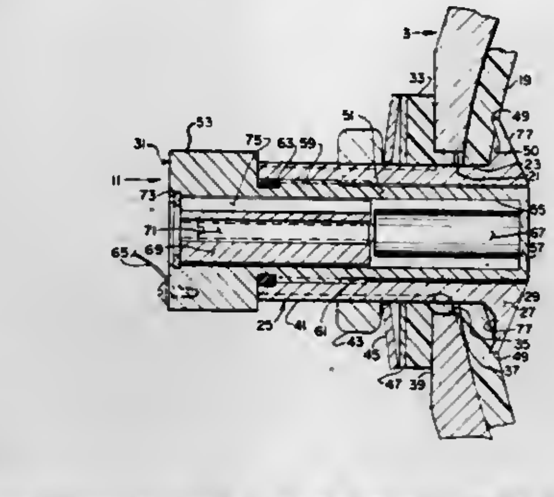

surface being generally conical-shaped with the central portion thereof projecting into said meter body more than the outer margins thereof, the portion of said second surface surrounding said bore extending through said fitting and the end of electrode in sensing relation with said fluid being generally coterminous.

4,297,898
STABILIZED VORTEX-SHEDDING FLOWMETER
Peter J. Herzl, Morrisville, Pa., assignor to Fischer & Porter Co., Warminster, Pa.
Continuation-in-part of Ser. No. 13,557, Feb. 21, 1979, Pat. No. 4,226,117. This application Dec. 14, 1979, Ser. No. 103,490
Int. Cl.^{3} G01F *1/32*
U.S. Cl. 73—861.22 **12 Claims**

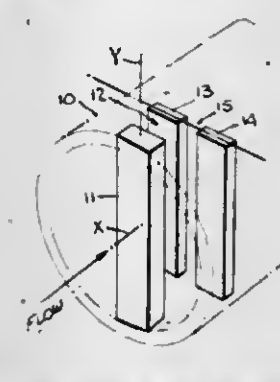

1. A stabilized vortex-shedding flowmeter comprising:

A. a flow tube through which a fluid stream to be metered is conducted, said tube having a longitudinal flow axis;

B. a front obstacle having a predetermined geometry transversely disposed in said tube to divide the fluid stream therein and to cause vortices to be shed alternately on either edge thereof at a repetition rate proportional to the flow rate of the fluid, thereby producing downstream trains of vortices moving along the right and left sides of the tube;

C. a rear obstacle fixedly supported in the tube behind the front obstacle and mechanically disconnected from the front obstacle to define an unobstructed gap therewith, said rear obstacle being constituted by a pair of parallel relatively broad beams symmetrically disposed with respect to the flow axis and lying in a plane normal thereto, the beams being restrained to remain in a plane transverse to the flow axis, the divided fluid stream, as it flows past the front obstacle, developing a stagnant zone in the gap that is initially aligned with the flow axis; but as vortices are successively detached from the front obstacle and appear alternately on either side of the gap, the low pressure produced by each vortex acts to draw the stagnant zone in front of the beam adjacent thereto, the fluid then going around and past the other beam and imposing a drag force thereon, the drag forces on the beams alternating at a flow rate proportional to flow rate to produce an alternating movement of the stagnant zone that is bi-stable regardless of fading, turbulence and other disturbances; and

D. transducer means for sensing said alternating movement in said tube to produce a corresponding electrical signal.

4,297,899
FLUID FLOW SENSOR
Peter G. Blaney, Walnut Creek; Dwain D. Conley, Clayton, and Willard L. Zeigner, San Ramon, all of Calif., assignors to Zemco, Inc., San Ramon, Calif.
Filed Nov. 23, 1979, Ser. No. 96,830
Int. Cl.^{3} G01F *1/22*
U.S. Cl. 73—861.58 **4 Claims**

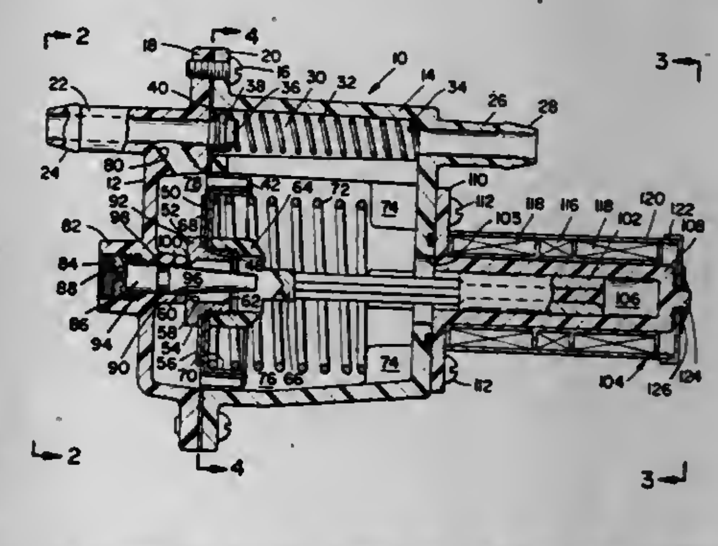

1. A sensor device for measuring the flow rate of fluid through a conduit comprising:

an inlet housing member forming an inlet chamber and having an inlet connection to said conduit;

an outlet housing member forming an outlet chamber and attached to said inlet housing member, said inlet housing member having integral means forming an inlet passage and said outlet housing member having integral means forming an outlet passage which is axially aligned with said inlet passage;

a diaphragm assembly including flexible diaphragm means retained between said inlet and outlet chambers and having a central aperture, said flexible diaphragm means including an annular planar portion around said aperture, an integral circular portion with a U-shaped cross-section around the periphery of said planar portion and an outwardly extending portion integral with said circular portion, located between adjacent flange portions of said housing members, said diaphragm means also including an opening in said outwardly extending portion, said opening having an enlarged sealing lip along its edge and forming a bypass valve seat axially aligned with said inlet passage of said inlet housing;

an adjustable needle valve having a tapered body portion extending into said central aperture to form a relatively small annular opening between said inlet and outlet chambers;

spring means in said outlet housing engaging said diaphragm means and normally urging it toward said needle valve means;

elongated means fixed to and extending from said diaphragm means;

a differential transformer including a magnetic core attached to the end of said elongated means and fixed windings surrounding said core;

means for producing an output signal from said differential transformer proportional to the linear movement of said magnetic core and thus to the movement of said dia-

phragm and the rate of fluid flow through said small opening.

4,297,900
AVERAGING PITOT PRIMARY SYSTEM
Robert O. Brandt, Jr., Garner, N.C., assignor to Brandt Industries, Inc.
Continuation of Ser. No. 954,892, Oct. 26, 1978, abandoned. This application Feb. 25, 1980, Ser. No. 124,340
Int. Cl.³ G01F *1/46*
U.S. Cl. 73—861.66 3 Claims

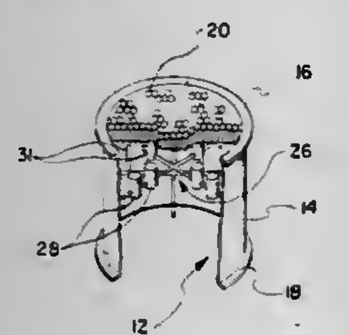

1. An averaging pitot primary system for measuring air flow comprising: an air receiving duct assembly having air flow straightening means incorporated therein; an array of total pressure pitots strategically disposed about the cross sectional area of said air receiving duct assembly adjacent and down stream from said air flow straightening means, each total pressure pitot including an opening parallel with respect to said air receiving duct assembly and wherein the opening within a respective total pressure pitot is of a diameter between 0.030 inches and 0.060 inches; shroud means associated with said total pressure pitots and axially surrounding respective total pressure pitots for minimizing the effects of cross and angular flow; an array of single point static pressure pitots strategically disposed about the cross sectional area of said air receiving duct assembly down stream from said air flow straightening means, and wherein said single point static pitots face the oncoming air flow and includes an opening formed about the side thereof generally perpendicular to the direction of air flow within said duct; manifold means for operatively connecting respective pitots of said total pressure pitot array together, and for connecting respective pitots of said static pressure pitot array together; a differential pressure transmitter including an independent air supply for operating the transmitter operatively connected to said manifold means and further including pitot purge means for continuously purging said pitots by directing a system of air from the transmitter through the respective pitots wherein the back pressure sensed by said transmitter may be used to measure air flow through said air receiving duct assembly; and wherein said manifold means includes a first manifold connecting said static pressure pitots together and a second manifold connecting said total pressure pitots together, and wherein each of said manifolds is connected to a separate input of said transmitter; said first manifold that supports said total pressure pitots comprising at least four generally equally spaced radial sections that project outwardly from a central axis to where they terminate about an outer area of said air receiving duct assembly; and wherein said second manifold also includes at least four generally equally spaced radial sections projecting likewise from said central axis and which are disposed approximately 45 degrees out of phase with respect to the radial sections of said first manifold.

4,297,901
TONNAGE INDICATOR FOR TOGGLE PRESS
John F. Stroup, Cuyahoga Falls; Leonard P. Nypaver, Westlake, and Dale S. Eberst, Strongsville, all of Ohio, assignors to Van Dorn Company, Strongsville, Ohio
Filed May 29, 1980, Ser. No. 154,528
Int. Cl.³ G01L *5/00*
U.S. Cl. 73—862.53 21 Claims

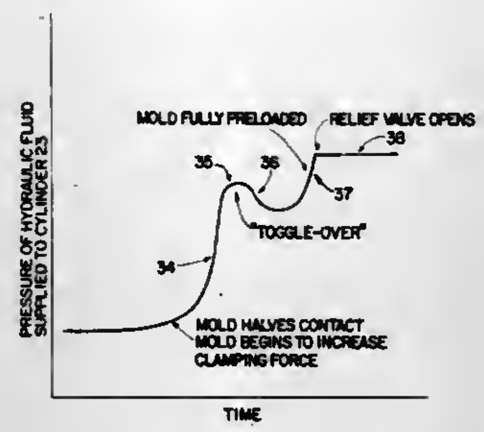

18. A method for measuring the final tonnage produced by a press having a toggle mechanism actuated by a closing means, which comprises:
- measuring the closing force exerted on the toggle mechanism by the closing means;
- detecting an initial peak in the measured closing force;
- converting the value of the initial peak in the measured closing force to a final press tonnage value using a proportional relationship.

4,297,902
SAMPLER FOR MOLTEN MATERIAL AND A COMPONENT THEREOF
William J. Collins, 7005 Madison St., Fort Wayne, Ind. 46410
Filed Sep. 17, 1979, Ser. No. 75,941
Int. Cl.³ G01N *1/12, 1/20*
U.S. Cl. 73—863.33 15 Claims

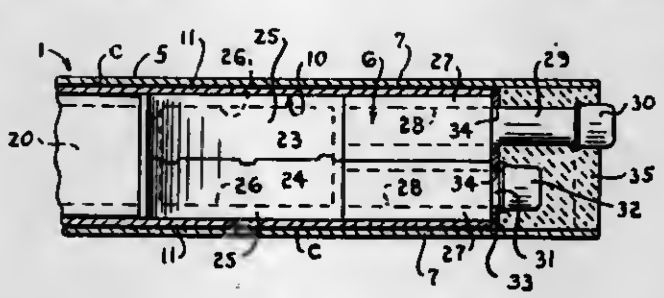

1. A subassembly for use in obtaining a sample of molten material comprising a pair of mating sections, each of said sections having a recess and a tubular formation, said recesses when said sections are correctly assembled providing a chamber, and said tubular formations serving to respectively accommodate tubular means for the purposes described.

4,297,903
LIQUID TRANSFER VALVE
Edmund E. Buzza, Fullerton, Calif., assignor to Beckman Instruments, Inc., Fullerton, Calif.
Filed Apr. 24, 1980, Ser. No. 143,238
Int. Cl.³ G01N *35/08*
U.S. Cl. 73—864.22 9 Claims

1. A liquid transfer valve for use with a probe, said probe being movable relative to said valve in a plane of travel toward and away from said valve, said valve comprising:
- a first valve portion including an access port extending through said first valve portion approximately parallel to said plane of travel to allow probe movement therethrough, said first valve portion also including at least one conduit communicating with said access port; and
- at least one movable valve portion mounted on said first valve portion for relative movement to a pickup position and a delivery position;
- said movable second valve portion including a clearance

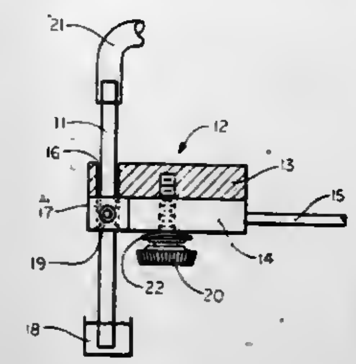

hole extending through said movable valve portion approximately parallel to said plane of travel, said clearance hole aligned with said access port in said pickup position to allow probe movement therethrough; and
- said movable valve portion further including at least one passageway communicating with said access port in said delivery position.

4,297,904
GIMBALS
Donald F. Morton, Welwyn, England, assignor to British Aerospace Public Limited Company, London, England
PCT No. PCT/GB79/00089, § 371 Date Jan. 31, 1980, § 102(e) Date Jan. 2, 1980, PCT Pub. No. WO79/01161, PCT Pub. Date Dec. 27, 1979
PCT Filed May 30, 1979, Ser. No. 189,834
Claims priority, application United Kingdom, May 31, 1978, 25711/78
Int. Cl.³ G01C *19/22;* F16C *11/12*
U.S. Cl. 74—5 F 6 Claims

1. A gimbal assembly for carrying a rotor for spin about a z axis includes an inner member, an outer member, first and second frame members situated between the inner and outer members, first outer pivot means pivoting the first frame member to the outer member about a y axis, second outer pivot means pivoting the second frame member to the outer member about an x axis, first inner pivot means pivoting the second frame member to the inner member about the y axis, second inner pivot means pivoting the first frame member to the inner member about the x axis, the first frame member comprising a continuous periphery having opposed regions at the y axis outwardly directed from the z axis on which the first outer pivot means are carried, further opposed regions at the x axis inwardly directed toward the z axis on which the second inner pivot means are carried, and bridging regions joining the outwardly and inwardly directed regions, the second frame member comprising a continuous periphery identical to that of the first frame member having opposed regions at the x axis outwardly directed from the z axis on which the second outer pivot means are carried, further opposed regions at the y axis inwardly directed toward the z axis on which the first inner pivot means are carried, and bridging regions joining the outwardly and inwardly directed regions, successive bridging regions of one frame member being formed to alternately cross over and cross under the bridging regions of the identically formed other frame member so that the frame members are interlaced.

4. A method of forming a gimbal assembly as defined in claim 1 from a billet of solid material with parallel end faces, including the not necessarily sequential steps of:
- forming between the end faces four identical inwardly extending bores two along the y axis and two along the x axis to accept the first and second pivot means respectively,
- forming between the end faces four identical wedge shaped inwardly extending slots equally spaced between and in the same plane as the x and y axes of a depth to leave a boss of solid material on the z axis to eventually form the inner member,
- forming an outer annular slot co-axially with the z axis to eventually separate the outer member from the frame members, fillets of material being left to hold the partly formed billet rigidly in one piece,
- forming from the outer annular slot four identical slots inwardly extending toward the z axis equally spaced between the x and y axes of a length to provide clearance between the first and second frame members,
- forming an inner annular slot co-axially with the z axis to eventually separate the frame members from the inner member, fillets of material being left to hold the partly formed billet rigidly in one piece,
- forming four identical inner apertures on a common radius from the z axis, two lying on the x axis and two on the y axis to provide access to inner regions of the pivot means after insertion in their bores,
- forming four identical outer apertures on a common radius from the z axis, two lying on the x axis and two on the y axis to provide access to outer regions of the pivot means after insertion in their bores,
- forming an intermediate annular slot between the inner and outer annular slots, again co-axially with the z axis, the intermediate slot being in four identical segments two being equally spaced about the x axis and two being equally spaced about the y axis to provide eventual separation between the inwardly and outwardly directed regions of the first and second frame members,
- inserting and anchoring pivot means in the four bores to provide pivots between the inner member and the frame members and between the outer member and the frame members, and,
- removing the fillets of solid material to release the frame members from one another and from the outer and inner members.

4,297,905
GYROSCOPIC VERTICAL REFERENCE SYSTEM
Ruben Hadekel, 4 Lalor St., London SW6 5SR, England
Filed Sep. 13, 1979, Ser. No. 75,121
Claims priority, application United Kingdom, Oct. 5, 1978, 39371/78
Int. Cl.³ G01C *19/12, 19/20, 19/52*
U.S. Cl. 74—5.43 4 Claims

1. A gyroscopic vertical reference system comprising a rotor of substantially spherical shape driven and supported by air pressure and revolving about a vertical spin axis in a stator formed as a hollow spherical chamber, said chamber being rigidly mounted on a gimballed platform, said rotor being formed with a hole through its spin axis, said hole being fed with pressure air at one end and the opposite end being sur-

rounded with a groove in the rotor leaving a small land between said groove and said hole, the groove communicating with atmosphere, and the hole and groove cooperating with ports in the stator to create pressure differences corresponding to a displacement between rotor and stator representing a

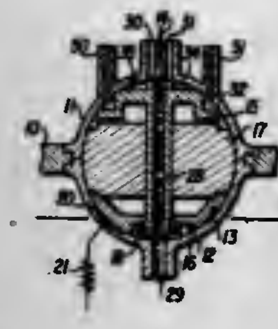

deviation of the rotor spin axis from the perpendicular to the platform, said pressure differences being fed to pneumatic actuators in a sense enabling these actuators to drive said platform in a direction which annuls the displacement and restore the perpendicularity of the platform to the spin axis.

4,297,906
GEAR BOX
Kenneth Costello, 7 Aldwick Close, London S.E.9, England
Continuation of Ser. No. 838,013, Sep. 29, 1977, abandoned. This application Oct. 22, 1979, Ser. No. 87,176
Int. Cl.^{3} F16H *57/00, 3/08, 57/02*
U.S. Cl. 74—410 **8 Claims**

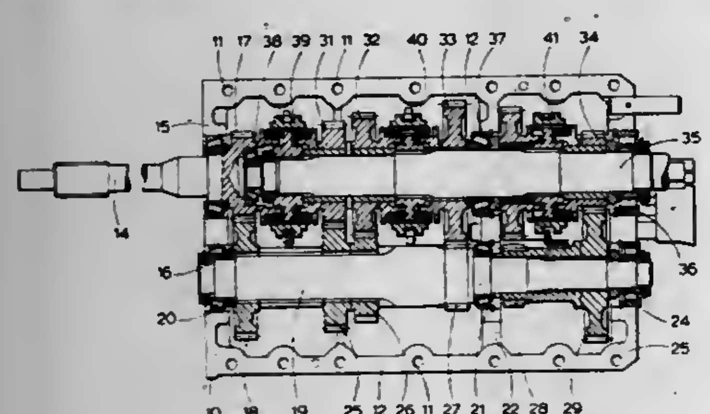

1. A gear box comprising:
a gear box casing;
input shaft means for receiving drive whereby to cause said shaft means to rotate in a predetermined direction;
first mounting means to mount said input shaft means in said casing;
a first helical input gear means mounted on said input shaft to rotate therewith;
a lay shaft means;
a second helical gear means fixedly mounted to said lay shaft means and positioned to engage with said helical input gear means to be rotated thereby;
further helical gear means fixedly mounted to said lay shaft means;
main shaft means;
second mounting means to mount said shaft means in said casing coaxially with said input shaft means;
thrust bearing means mounted between adjacent ends of said input and main shaft means;
output helical gear means mounted on said main shaft means to selectively rotate therewith and adapted to engage with said further helical gear means to drive said main shaft;
the helices of the first helical input gear means and the output helical gear means being such that when the input shaft means is driven in said predetermined direction the input and main shaft means are thrust towards one another, said thrust being absorbed in said thrust bearing means;
and the helices on said second helical gear means and said further helical gear means being such that when the input shaft means is driven in said predetermined direction the second helical gear means and said further helical gear means are thrust apart from one another, said thrust being absorbed by the lay shaft to which said second helical gear means and said further helical gear means are fixedly mounted.

4,297,907
TORQUE SPLITTING GEAR DRIVE
Robert B. Bossler, Jr., and Charles P. Hardersen, both of Bloomfield, Conn., assignors to Kaman Aerospace Corporation, Bloomfield, Conn.
Filed Jun. 1, 1979, Ser. No. 44,492
Int. Cl.^{3} F16H *1/20, 35/06, 57/00*
U.S. Cl. 74—417 **15 Claims**

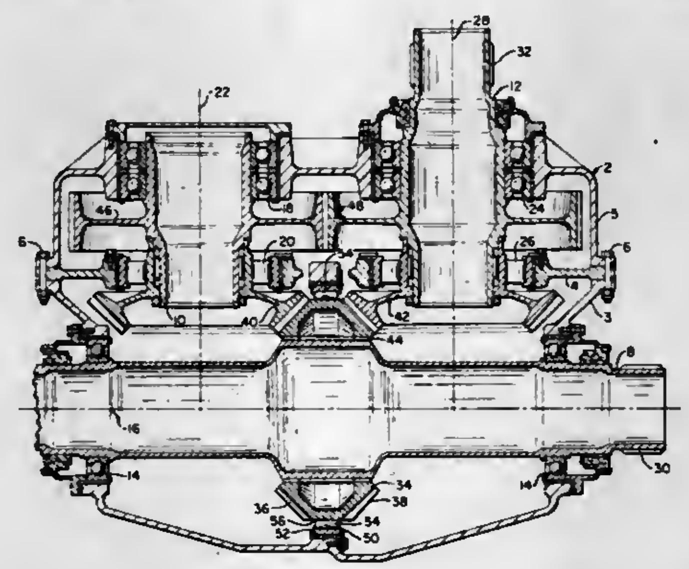

1. A torque splitting gear drive having a frame, first second and third shafts supported for rotation relative to said frame about first, second and third axes respectively, first and second gears carried by said first shaft and movable in unison along said first axis, two intermediate gears each fixed to a respective one of said second and third shafts and each meshing with a respective one of said first and second gears, and other gear means drivingly connecting said second and third shafts and compelling said second and third shafts to rotate in unison, further characterized by said first and second gears both being part of a torque distributing member carried by but separate from said first shaft, means connecting said member to said first shaft whereby it is constrained to rotate with and is free to move axially relative to said first shaft, and a bearing supported by said frame and surrounding and engaging said member along an axial portion thereof to rotatably support it for rotation relative to said frame about said first axis and to permit it to move axially relative to said frame and to said first shaft.

4,297,908
LEVERAGE SYSTEM
Ernst Zimmer, Friedberg, Fed. Rep. of Germany, assignor to Industrie-Werke Karlsruhe Augsburg Aktiengesellschaft, Augsburg, Fed. Rep. of Germany
Filed Sep. 19, 1979, Ser. No. 76,920
Claims priority, application Fed. Rep. of Germany, Sep. 22, 1978, 2841183
Int. Cl.^{3} G05G *1/04;* **F16H** *21/44*
U.S. Cl. 74—469 **5 Claims**

1. In a leverage system comprising: a support; a four-member articulated linkage pivotally secured to said support; a load arm rigid with one of the members of said linkage; a gripper on said load arm spaced from said linkage; and a weight-compensating assembly connected to said linkage for counterbalancing gravitational forces on said leverage system to maintain same

stationary in a plurality of configurations, said linkage having a plurality of pivots;
the improvement wherein said weight-compensating assembly includes a force applicator pivotally fixed to said support, a first bar element pivotally secured to said applicator and to a pivot of said linkage, and a second bar

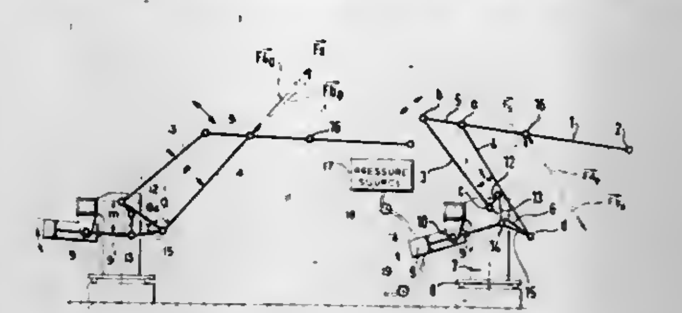

element pivotally secured to one end to said applicator and said first bar element and at an opposite end to a member of said linkage, whereby said first and second bar elements coact in transmitting force from said applicator to said linkage and in pivoting said applicator to vary the direction of force application in accordance with the configuration of said linkage.

4,297,909
TRANSMISSION SHIFT CONTROL LINKAGE FOR CONTROLLING BOTH SPEED AND DIRECTION CHANGES WITH ONE INPUT MOTION
Stephen K. Crouse, Dubuque, Iowa, assignor to Deere & Company, Moline, Ill.
Filed Dec. 14, 1979, Ser. No. 103,497
Int. Cl.^{3} G05G *9/00*
U.S. Cl. 74—473 R **8 Claims**

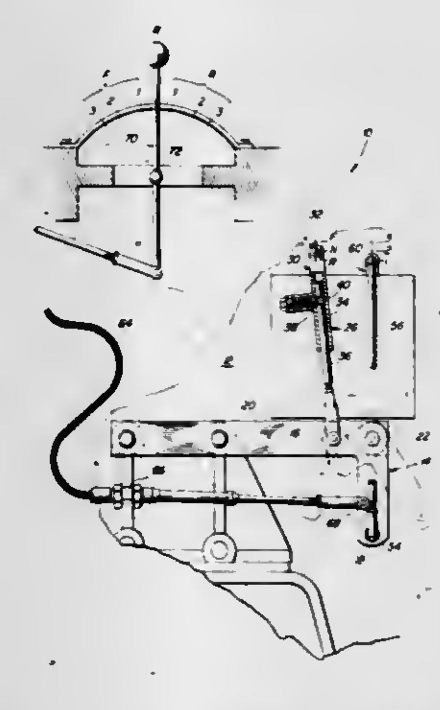

1. In a control, for a hydraulically controlled transmission, including a direction selector valve shiftable in opposite directions from a neutral position respectively to forward and reverse drive-effecting positions, and a speed selector valve shiftable in a first direction from a first speed-effecting position to various serially arranged positions for effecting increasing speeds, an improved linkage for controlling the shifting of the direction and speed selector valves, comprising: an input link mounted for pivotal movement about a fixed axis among a centered neutral position and various forward and reverse speed positions respectively located in first and second directions from the last-named neutral position; a first output link pivotally interconnected between the input link and the direction selector valve; a second output link interconnected between the input link and the speed selector valve and located on the input link and the speed selector valve such that a line extending through the connections of the second output link with the input link and speed selector valve, when the input link is in its neutral position, intersects said axis; the respective connections of the first and second output links with the input link being such that respective lines joining the connections with the axis define an included angle of about 90°.

4,297,910
TRANSMISSION GEAR SELECTOR CONTROL
Richard A. Myers, Livonia, Mich., assignor to Ford Motor Company, Dearborn, Mich.
Filed Sep. 17, 1979, Ser. No. 76,117
Int. Cl.^{3} G05G *9/12, 5/02*
U.S. Cl. 74—473 R **1 Claim**

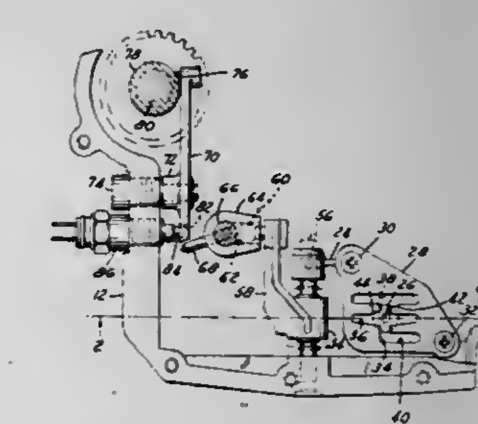

1. A transmission gear selector for controlling movement of a gear shift mechanism comprising:
a gear selector shaft mounted for rotation and axial displacement;
a selector pin fixed to the selector shaft extending outwardly therefrom;
a first control block fixed to the selector shaft;
a guide rail mounted for rotation about and axial displacement along an axis that extends transversely with respect to the selector shaft;
a second control block fixed to the guide rail;
a first bellcrank mounted for rotation about and axial displacement along an axis that extends transversely with respect to the selector shaft having one arm engaged in the first control block and a second arm engaged in the second control block, whereby axial movement and rotation of the selector shaft produce, respectively, axial movement and rotation of the guide rail;
guide means defining paths of selector shaft movement within which means the selector pin is fitted to control the movement of the selector shaft and the guide rail;
an engagement pin fixed to the guide rail and extending outwardly therefrom;
a second bellcrank mounted for pivotal movement having one arm engageable by the engagement pin upon rotation of the guide rail, the pivotal movement of the second bellcrank resulting from axial movement of the guide rail; and
a gear journalled on an idler shaft that extends substantially parallel to the axis of the guide rail and movable axially on the idler shaft in response to pivotal movement of the second bellcrank.

4,297,911

STEERING EQUIPMENT ARRANGEMENT FOR MOTOR VEHICLES

Sven-Ake Grahn; Magnus A. Roland, and Carl L. Eriksson, all of Trollhättan, Sweden, assignors to Saab-Scania Aktiebolag, Sodertalje, Sweden

Filed Dec. 11, 1978, Ser. No. 967,979

Claims priority, application Sweden, Dec. 12, 1977, 7714050

Int. Cl.³ B62D *1/18*

U.S. Cl. 280—777 **8 Claims**

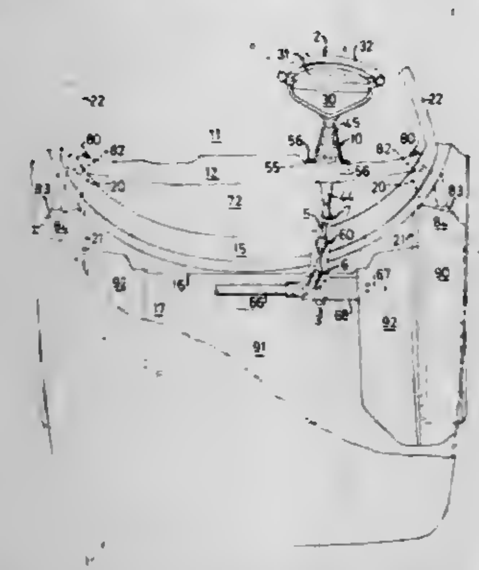

1. A safety steering arrangement for a motor vehicle comprising a steering wheel; a steering column fixed to the steering wheel; an intermediate shaft connecting said steering column with a steering gear and having a deformable portion, which allows compression and/or deflecton of the intermediate shaft under the action of an exceptional impact force from the steering gear side of the intermediate shaft; a column support carrying the steering column and having deformation initiation areas, a vehicle windscreen beam; a cowl panel; a support beam extending substantially horizontally and transversely at a location rearwardly of and separate from the vehicle windscreen beam and cowl panel and fixed in carrying portions of the vehicle body sides, said support beam being positioned in front of said deformation initiation areas of said column support and having a surface facing the steering wheel and supporting the column support when said deformation areas are deformed under the action of an exceptional impact force from the steering wheel side of the steering column.

4,297,912

CONTROL DEVICES FOR USE WITH A SHEATHED WIRE OR CABLE

Robert Marechal, Paris, France, assignor to Société Anonyme SICMA - Société Industrielle and Commerciale de Matériel Aeronautique, both of Issoudun, France

Filed Feb. 21, 1979, Ser. No. 13,074

Claims priority, application France, Feb. 22, 1978, 78 05785

Int. Cl.³ F16C *1/10*

U.S. Cl. 74—501 R **6 Claims**

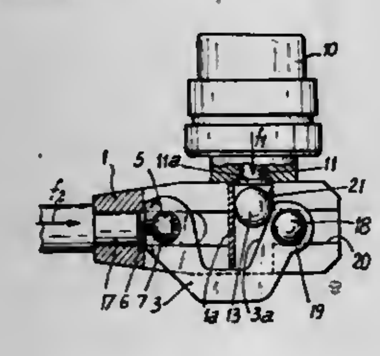

1. A control device comprising a housing, a traction element slidable in the housing, said traction element being securable to an elongate control element, and said traction element having means defining an inclined surface, ball means cooperating with said inclined surface, and pushbutton means slidable in the housing and actuatable to cause the traction element to be displaced by interaction between the ball means and said inclined surface, said housing including means defining an internal partition, said traction element being generally U-shaped and comprising opposed limbs, said limbs being located on opposite sides of said internal partition.

4,297,913

REMOTE CONTROL HAVING PUSH-PULL BLADE WITH CAPTIVE ROLLING ELEMENTS

Paul W. Garbo, 48 Lester Ave., Freeport, N.Y. 11520

Filed Mar. 29, 1979, Ser. No. 25,008

Int. Cl.³ F16C *1/10*

U.S. Cl. 74—501 R **16 Claims**

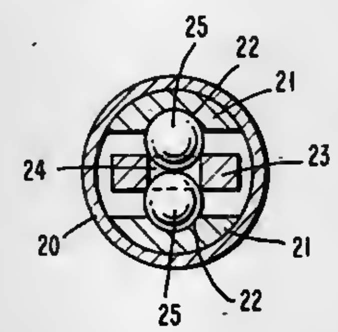

1. A remote control comprising a tubular sheath, a flexible push-pull blade extending longitudinally through said sheath and having a series of spaced openings disposed along the longitudinal center line of said blade, at least one rolling element seated in each of the opposite ends of each of said openings, each of said openings being dimensioned so that the opposed rolling elements in each of said openings are in contact with each other but are prevented from passing therethrough.

4,297,914

CONTROL LEVER GATE WITH LEVER RESTRAINT

John E. Klem, Waukegan, and Daniel E. Nelson, Wildwood, both of Ill., assignors to International Harvester Company, Chicago, Ill.

Filed May 12, 1980, Ser. No. 148,632

Int. Cl.³ G05G *5/06*

U.S. Cl. 74—532 **7 Claims**

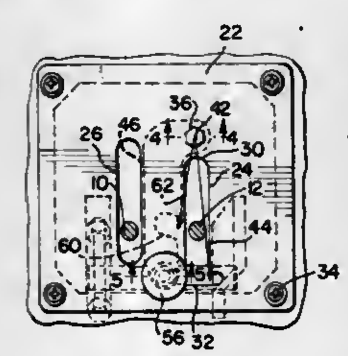

1. In a vehicle having a control lever capable of being moved in fore and aft directions and including a neutral location, a lever restraint for restraining said control lever in said neutral position comprising:

- a rigid cover plate provided with an elongated slot for accommodating said control lever in the range of said control lever fore and aft directions, a transverse arcuate slot at an end of said elongated slot, a bore through said rigid cover plate located adjacent said slot at the upper end thereof opposite said transverse arcuate slot;
- a bolt and nut fastener positioned in said bore of said rigid cover plate defining an arcuate center point;
- a pivotable plate pivotally attached to the back side of said rigid cover plate by said bolt and nut fastener, said pivotable plate being generally "L" shaped and provided with an upper aperture in an end of a short leg of said "L" shape and a threaded lower aperture in the end of a long leg of said "L" shape, and a trap slot in a mid-section of said long leg of said "L" shape pivotable plate;
- a bushing carried in said upper aperture of said pivotable plate, said bushing having a length greater than the width of said pivotable plate;
- a security knob having a threaded stud passing through said rigid cover plate and threaded into said threaded lower aperture of said pivotable plate whereby said pivotable plate may be pivoted around said bolt and said control lever, when in the neutral position, will be trapped in said trap slot of said pivotable plate and whereby tightening of said security knob will prevent movement of said pivotable plate.

4,297,915

POSITIVE LEVER LOCATION MAINTENANCE TRAP

John E. Klem, Waukegan, Ill., assignor to International Harvester Company, Chicago, Ill.

Filed May 12, 1980, Ser. No. 148,648

Int. Cl.³ G05G *5/06*

U.S. Cl. 74—532 **5 Claims**

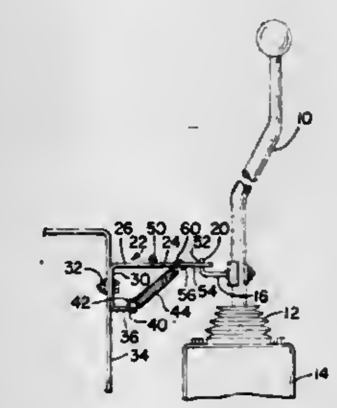

1. In a vehicle having a hydraulic working circuit and a control for adjusting flow through said circuit, the improvement comprising:

- a control lever operable in a fore and aft vertical plane having a bore provided therethrough transverse to the longitudinal axis of said control lever;
- a rod having an upwardly extending end portion positioned into said bore of said control lever and projecting forwardly from said control lever;
- a hinged plate having a mounting plate surface and a stationary leaf extending from said mounting plate surface toward said control lever, said stationary leaf having an edge, a movable leaf connected to said stationary leaf through a hinged pin on said stationary leaf, said movable leaf having an aperture therethrough of a diameter large enough to accommodate said rod and an appendage provided with an aperture therethrough;
- a projecting tab extending forward from said mounting plate surface toward said control lever, said projecting tab having an aperture located through said tab and being outboard of a vertical plane corresponding to said edge of said stationary leaf, said aperture of said projecting tab aligned in the same vertical plane as said aperture in said appendage of said movable leaf;
- a spring having a first mounting eye connected through said aperture of said projecting tab and a second mounting eye connected through said aperture of said appendage of said movable leaf;
- a contact surface integral with said stationary leaf adjacent said hinged pin on a lower side thereof and a second contact surface integral with said movable leaf adjacent said hinged pin on the lower side thereof, said first and second contact surfaces in contact with each other when said movable leaf is urged to a position whereby said rod is engaged in said aperture of said movable leaf.

4,297,916

CHAIN TIGHTENER ATTACHMENT

Elvin O. Burroughs, 81650 Lost Creek Rd., Dexter, Oreg. 97431

Continuation-in-part of Ser. No. 824,857, Aug. 15, 1977, abandoned. This application Jan. 29, 1979, Ser. No. 7,771

Int. Cl.³ G05G *1/00*

U.S. Cl. 74—544 **2 Claims**

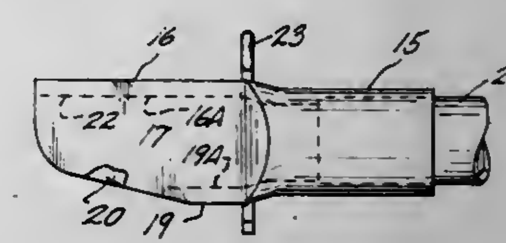

1. In an attachment for temporary axial engagement with a pivoted handle of a chain tightener, said attachment increasing leverage of the handle during tightening and loosening of a flexible member coupled to the tightener and extending about a load, said attachment including an elongate rigid member for endwise reception of the chain tightener handle during tightening of the flexible member, said attachment further including a pair of opposed sidewalls disposed at one end of said member and a truncated wall having an opening therein and contiguous with said sidewalls and terminating remotely inwardly from outer extremities of said opposed sidewalls to define an open area, the improvement comprising,

- a continuous wall extending lengthwise the length of said sidewalls in overlapping relationship with said truncated wall and interconnecting said sidewalls, said continuous wall being substantially perpendicular to the sidewalls and having an inwardly disposed continuous surface along and against which the end of the tightener handle may slide during rapid pivotal handle movement encountered during a tightener releasing operation whereby a segment of said handle moves through said open area while the handle end forcefully displaces the attachment in a lateral direction.

4,297,917

POWER DISTRIBUTION GEARING FOR DOUBLE HELIX EXTRUDERS

Erwin Baner, Weinstadt; Ralf Davids, Illingen; Gerhard Gotz, Ludwigsburg; Hilmar Jussen, Marbach; Heinrich Arndt, Augsburg; Louis Kummel, Stadtbergen; Rudolf Morhart, and Erich Pollak-Banda, both of Augsburg, all of Fed. Rep. of Germany, assignors to Werner & Pfleiderer, Stuttgart and Zahnraderfabrik Renk Aktiengesellschaft, Augsburg, both of, Fed. Rep. of Germany

Filed Sep. 18, 1979, Ser. No. 76,606

Claims priority, application Fed. Rep. of Germany, Sep. 27, 1978, 2841985

Int. Cl.³ F16H *37/06*

U.S. Cl. 74—665 G **5 Claims**

1. A drive gear assembly for the synchronous rotation of the shafts of a double helix extruder, said gear assembly comprising:

- a housing;
- a first power transmission path mounted to said housing comprising gear reduction means for driving a distribution gear;
- a first double joint toothed coupling shaft engaged with said distribution gear;
- a second double joint toothed coupling shaft engaged with said distribution gear;

a frontal central gear engaging said first toothed coupling shaft;
a rearward central gear engaging said second toothed coupling shaft;
a first extruder helix shaft extending into said housing and being rotatably disposed with respect to said housing;
a second extruder helix shaft extending into said housing and being rotatably disposed with respect to said housing;
a frontal lower gear train coupled between said frontal central gear and said first extruder shaft;
a frontal upper gear train coupled between said frontal central gear and said first extruder shaft;
a rearward lower gear train coupled between said rearward central gear and said second extruder shaft;

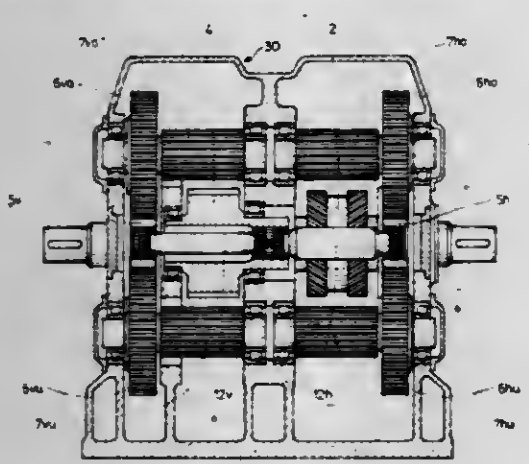

a rearward upper gear train coupled between said rearward central gear and said second extruder shaft;
each said gear train including a tumbler-born intermediary gear;
said frontal central gear being unsupported in said housing and lying in the plane of the axes of the gears to which it engages in both of said frontal upper and lower gear trains; and
said rearward central gear being unsupported in said housing and lying the plane of the axes of the gears to which it engages in both of said rearward upper and lower gear trains.

4,297,918
CONTROL SYSTEMS FOR STEPLESSLY-VARIABLE RATIO TRANSMISSIONS
Forbes G. deB. Perry, Forest Row, England, assignor to National Research Development Corporation, London, England
Filed Jun. 21, 1979, Ser. No. 50,745
Claims priority, application United Kingdom, Jun. 23, 1978, 27744/78
Int. Cl.[3] F16H *37/06, 15/00, 13/00*
U.S. Cl. 74—690 6 Claims

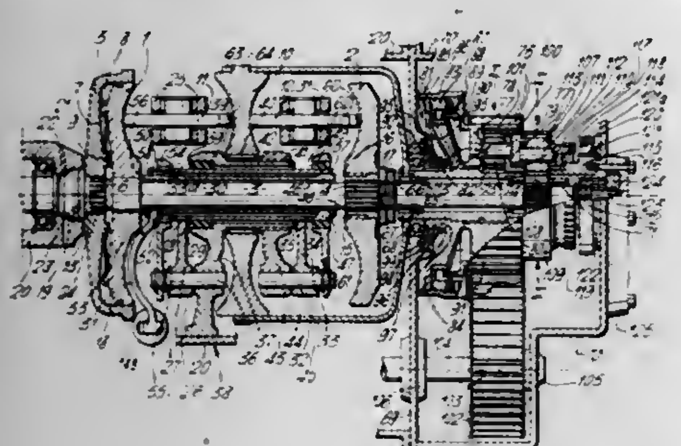

1. A control system for a steplessly variable ratio transmission unit of the type having an input disc and an output disc which have facing surfaces forming part of a torus and which are mounted for rotation about a common main axis, there being at least one roller in driving engagement with the toroidal surfaces of the discs, the or each roller having a mounting permitting it to swivel about a ratio change axis substantially tangential to the centre circle of the torus of which the surfaces of the discs form part, whereby the speed ratio between the input and the output disc may be changed, the roller mounting also permitting limited bodily translation of the roller substantially along the line of the ratio change axis whereby a change in the said ratio is initiated, any translational position of the roller mounting along this line having a corresponding equilibrium ratio, the transmission unit comprising also a ratio actuator coupled to the roller mountings opposing the driving torque reaction of the rollers, an end-load actuator urging the discs together into driving engagement with the or each roller, a source of pressurised fluid for the ratio actuator and the end-load actuator, the control system comprising a ratio control valve which valve is operable to control the fluid pressure from the source to a required extent to produce a required ratio by means of the ratio actuator and a corresponding end-load on the discs by means of the end-load actuator the control system further comprising end-stop valve means operable, via a mechanical connection, by the ratio actuator at or near to one end at least of its permissible stroke, to constrict the fluid connection to the ratio control valve so that the pressure from the source is no longer solely under control of the ratio control valve and rises up-stream of the end-stop valve meaans, which comprises a cylinder space and a movable member the fluid pressure from the source being introduced into the cylinder space, the rising pressure on operation of the end-stop valve means, acting in the said cylinder space upon a piston face of the movable member in a sense urging the ratio actuator away from the end of its stroke, the end-load actuator being connected to the pressurised fluid source up-stream of the end-stop valve means.

4,297,919
MECHANICAL POWER TRANSMISSION METHOD AND MEANS
Manfred R. Kuehnle, 6 Linmoor Ter., Lexington, Mass. 02173
Filed Apr. 19, 1979, Ser. No. 31,469
Int. Cl.[3] F16H *3/44, 1/18*
U.S. Cl. 74—750 R 18 Claims

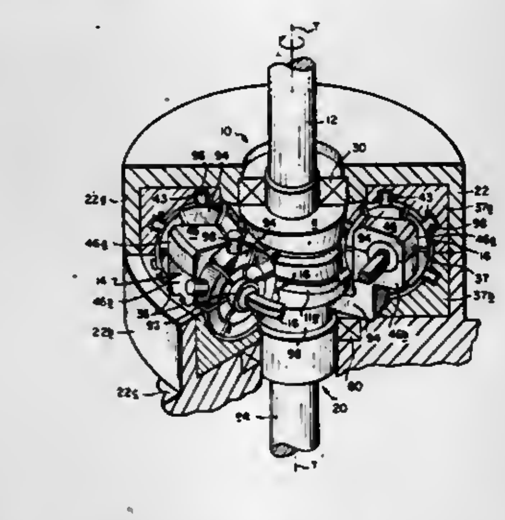

1. A mechanical transmission of the type including one or more helix-like races defining a plurality of race convolutions having a common axis of rotation, a support member extending along the axis, at least one bearing unit axially fixed to the support member and with its periphery positioned in rolling engagement with the race convolutions, and means for rotating each bearing unit about said axis whereby each bearing unit rolls along the race convolutions and the support member advances along said axis, the improvement wherein each bearing unit comprises
A. a hub,
B. a circular array of tooth means located radially outward from the hub, each tooth means engaging in a different race convolution, and
C. means for connecting each tooth means to the hub so that each tooth means is resiliently displaceable independently of the other tooth means in the direction along said axis of rotation, but not circumferentially around the hub so that when the transmission is placed under load, each tooth is displaced in said direction as necessary to distribute said load uniformly among all the bearing units.

4,297,920
CYCLOIDIC GEAR
Hans Richter, Oberlanderstrasse 123, D-8900 Augsburg, Fed. Rep. of Germany
Filed Jul. 5, 1979, Ser. No. 55,131
Claims priority, application Fed. Rep. of Germany, Jul. 13, 1978, 2830909
Int. Cl.[3] F16H *1/28, 35/00*
U.S. Cl. 74—804 1 Claim

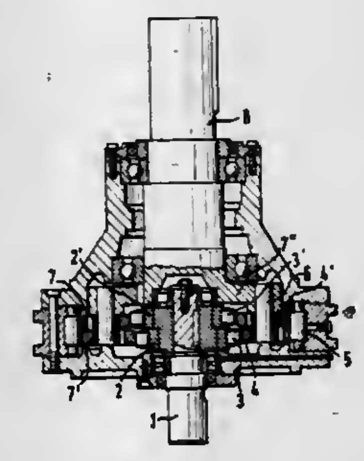

1. In a cycloid gear of the type comprising a drive shaft, a pair of eccentric disks connected to said drive shaft and displaced by 180° from one another, a pair of curved disks disposed around said pair of eccentric disks respectively, said curved disks respectively having outer peripheries of cyclodic curved shape which roll off along a plurality of rollers that are in engagement with said outer peripheries and that are disposed in an array concentric with said drive shaft, each of said curved disks having a plurality of boreholes therein disposed in a ring shaped array, the boreholes in said curved disks respectively overlapping one another in pairs to define an effective axially directed opening through each pair of overlapping boreholes, an output shaft, and a plurality of axially directed bolts extending through said effective axially directed openings respectively and connected to said output shaft for driving said output shaft as said input shaft, said eccentric disks and said curved disks rotate, the improvement wherein said effective axially directed openings have a predetermined minimum dimension in a direction transverse to said shafts, each of said bolts having resilient carrier roller means thereon comprising a bush surrounding its associated bolt, a tubular sleeve of resilient material surrounding said bush, and a deformable tubular metal casing surrounding said resilient sleeve, the outside diameter of said tubular metal casing being the outside diameter of said carrier roller means, and the unstressed outside diameter of said carrier roller means being greater that the said predetermined minimum dimension of the axially directed opening through which said resilient carrier roller means passes, whereby all of said resilient carrier roller means are in continual resiliently compressed engagement with the opposing portions of the overlapping boreholes which define the effective axially directed openings through which said resilient carrier roller means pass respectively and operate, by reason of the compression of said resilient carrier roller means, to preload said gear.

4,297,921
CIRCULAR SAW BLADE REMOVING COMBINATION
Wally Wydra, 723 N. Walnut, Itasca, Ill. 60143
Filed Aug. 10, 1979, Ser. No. 65,610
Int. Cl.[3] B23D *57/00;* B25B *11/00*
U.S. Cl. 81—3 R 7 Claims

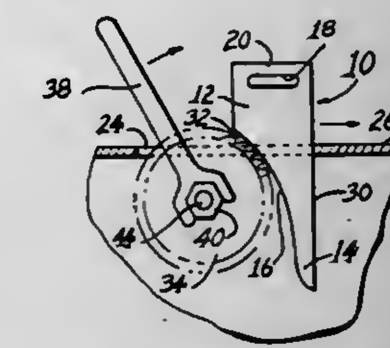

1. In combination: a support surface having a slot formed therein to enable a circular saw blade to extend therethrough; shaft means for receiving said circular saw blade in alignment with the slot in said support surface; locking means removably secured to said shaft means for securing said circular saw blade to said shaft means; a main body portion and a nose portion extending therefrom to form a tool; a circular-blade engaging portion formed on said nose portion, said nose portion insertable into said slot to have said circular-blade engaging portion urged against said circular saw blade for holding said blade against rotation; whereby said locking means is easily removed from said shaft to facilitate removal of said circular saw blade.

4,297,922
JAW SUPPORT FOR A POWER TONGS
Charles O. Higdon, 601 Howard Dr., Del City, Okla. 73115
Filed Apr. 16, 1980, Ser. No. 140,837
Int. Cl.[3] B25B *17/00*
U.S. Cl. 81—57.18 6 Claims

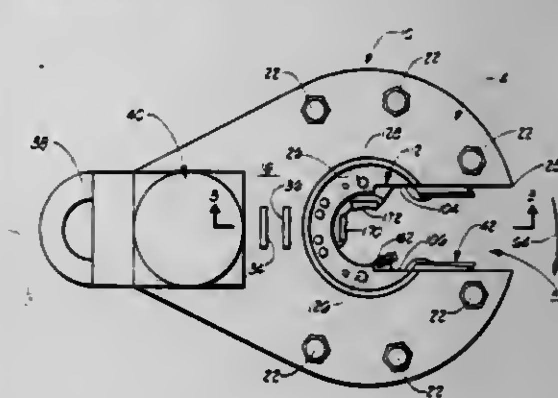

1. In a power tongs of the type having a rotatable rotor mounted on a case for rotation in first and second driven directions, said rotor having a central aperture for receiving a pipe to be turned and said rotor supporting a detachable jaw via a jaw support rotatably mounted on the rotor, and said power tongs including an actuating assembly for positioning the jaw to alternatively grip and release the pipe in response to a limited relative rotation between the rotor and the jaw support, wherein the rotor is characterized as having opposed end walls having a plurality of roller mounting holes formed therethrough, each of the roller mounting holes in one end wall of the rotor aligned with a roller mounting hole in the other end wall, and wherein the actuating assembly comprises a plurality of rollers each supported within the rotor via a roller pin inserted through a pair of aligned holes formed in opposite end walls of the rotor and extending therebetween, the improvement wherein the jaw support comprises:
a first support plate mounted flush against one of the end walls of the rotor;
a second support plate mounted flush against the other end wall of the rotor; and

means connecting the first support plate to the second support plate; and

wherein each of the support plates is characterized as having a generally arcuate form of an extent sufficient to overlay the roller mounting holes within the limited range of rotation of the jaw support on the rotor utilized for positioning the jaw to alternatively grip and release the pipe.

4,297,923

AUTOMATIC TIGHTENER/LOOSENER FOR INTERCELL ELECTRICAL CONNECTORS

Steven J. Specht, Mentor, Ohio, and Morton S. Kircher, Clearwater, Fla., assignors to Olin Corporation, New Haven, Conn.

Filed Nov. 13, 1976, Ser. No. 93,425

Int. Cl.³ B25B *21/02*

U.S. Cl. 81—57.41 **14 Claims**

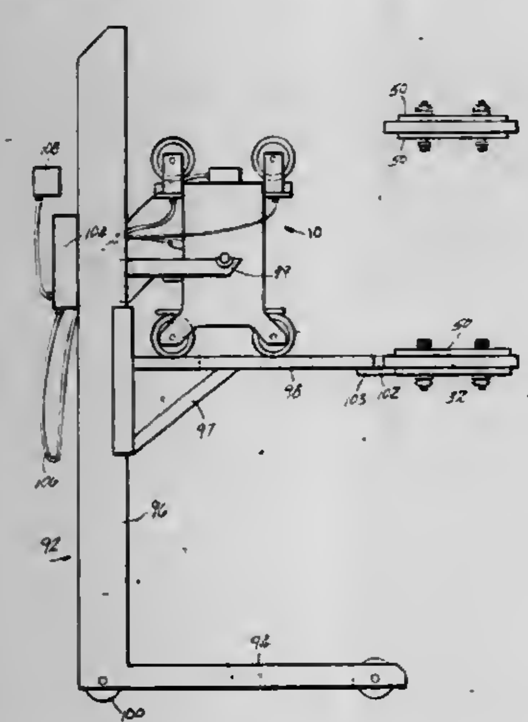

1. Apparatus for remotely loosening and tightening upper and lower electrical connectors between electrolytic cells, which apparatus comprises:

(a) remotely operable tightener means for selectively tightening and loosening said electrical connectors, means for moving said tightener means along a generally vertical path to selectively engage an upper or lower of said electrical connectors;

(b) means for inverting said movable support means thereby inverting said tightener means;

(c) moveable support means for supporting said tightener means and for moving said tightener means along a generally horizontal path to align said tightener means with said upper or lower electrical connectors along said generally vertical path before said tightener means is moved along said generally vertical path to engage said electrical connectors for loosening or tightening;

(d) guide means fastened to said movable support means and contactable with said electrical connectors for guiding said support means along a predetermined path of travel between said cells, said path including at least one predetermined location at which said tightener means is operable to loosen and tighten said electrical connector;

(e) locator means connected to said movable support means for locating said support means at said predetermined location along said path; and

(f) control means connected to said movable support means for remotely controlling the operation of said tightener means when said tightener means is located at said predetermined location, whereby said electrical connector is selectively and remotely tightened and loosened.

4,297,924

RATCHET WRENCH

Leonard W. Stephens, Fairview, Pa., assignor to Perry M. Lane, Washington, Pa.

Filed May 13, 1980, Ser. No. 149,462

Int. Cl.³ F16D *41/08*

U.S. Cl. 81—59.1 **21 Claims**

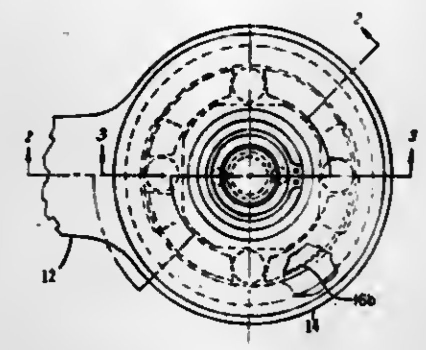

1. A clutch comprising a shank,

a rotatable body member having an inner annular surface around the shank,

arcuate shoes located between the shank and said inner surface for frictionally engaging said inner surface,

rollers located between the arcuate shoes and engageable with the ends of the shoes to press them against said inner surface,

a rigid positioning member movable in one direction to engage the shoes and hold first ends of the shoes against the rollers and the rollers against the shank whereby when the body member is rotated in said one direction the shoes are held by the rollers against said inner surface and the rollers engaging the shank force the shank to rotate in said one direction but when the body member is rotated in the opposite direction the shoes can slide on said inner surface,

the rigid positioning member being movable in said opposite direction to engage the shoes and hold second ends of the shoes against the rollers and the rollers against the shank whereby whereby when the body member is rotated in said opposite direction the shoes are held by the rollers against said inner surface and the rollers engaging the shank force the shank to rotate in said opposite direction but when the body member is rotated in said one direction the shoes can slide on said inner surface,

and actuating means having spring means engageable with the rigid positioning member to press it to its shoe engaging positions, said shoes having symmetrical upper and lower surfaces either of which may be top or bottom and further having symmetrical ends either of which may be said first end or said second end.

4,297,925

TURRET HEAD FOR A LATHE

Shinichi Ishizuka, and Kenji Sugimoto, both of c/o Citizen Watch Company Limited, No. 1-12, 6-chome, Hon-cho, Tanashi-shi, Tokyo, Japan

Filed Apr. 12, 1979, Ser. No. 29,556

Claims priority, application Japan, Jul. 15, 1978, 53/85677; Jul. 15, 1978, 53/85678

Int. Cl.³ B23B *29/32*

U.S. Cl. 82—2 R **3 Claims**

1. In a numerically controlled automatic lathe of the sliding headstock type comprising a spindle for supporting a workpiece and having a central axis, the improvement comprising:

a turret head including a bore and having a first group of polygonal surfaces each oriented in one direction and a second group of polygonal surfaces each extending from the edge of each of said first group of polygonal surfaces and oriented in another direction substantially perpendicular to said each of said first group of said polygonal surfaces;

said first group of said polygonal surfaces serving as means for mounting a first plurality of tool means for performing outside machining operation;

said second group of polygonal surfaces serving as means for mounting a second plurality of tool means for performing inside machining operation;

a saddle movable in a direction perpendicular to the central axis of said spindle and having a sliding surface facing said turret head;

a hollow support shaft fixedly supported by said saddle and extending from the sliding surface of said saddle, such that its axis intersects the central axis of said spindle at a predetermined axis, said hollow support shaft including a portion slidably engaging the bore of said turret head to rotatably support said turret head;

a turret head drive shaft disposed in and rotatably supported by said hollow support shaft, said turret head drive shaft having its end fixedly coupled to said turret head to cause said turret head to rotate around said hollow support shaft to index said turret head so as to bring ones of said first and second groups of polygonal surfaces to a working location in which said one of said first group of polygonal surfaces is substantially perpendicular to said central axis

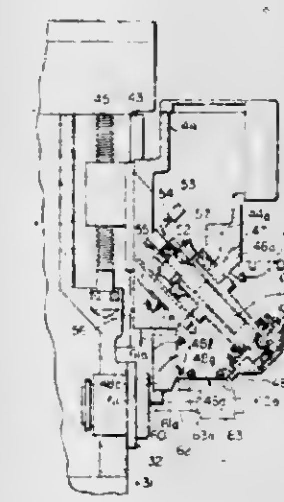

of said spindle and said one of said second group of polygonal surfaces is parallel to said central axis of said spindle;

said saddle having a cylinder including a chamber;

a piston member provided in said chamber at the end portion of said support shaft member;

a transmission disc member connected to the end of said turret head drive shaft member and fixed at its circumferential portion to said turret head;

gear means fixed to the other end of said turret head drive shaft member;

said piston acting on the end portion of said drive shaft to urge said turret head against the sliding surface of said saddle by a force transmitted from said piston through said gear means, said drive shaft and said transmission disc member;

said turret head having a plurality of positioning hole means;

said sliding surface being perpendicular to said axis of said support shaft member; and

a positioning member supported by said saddle and caused to protrude in one of said positioning hole means while at the same time said chamber of said saddle is supplied with a pressurized oil whereby said turret head is retained in a fixed position relative to said saddle by the action of said positioning member and the pressurized oil acting on said turret head through said piston, said drive shaft and said transmission disc member.

4,297,926

MACHINE TOOL WITH OFFSET COMPENSATION

Peter Russ, Monheim, and Heinz Jansen, Cologne, both of Fed. Rep. of Germany, assignors to Deutsche Industrieanlagen GmbH Werk Hermann Kolb Maschinenfabrik Koeln, Cologne, Fed. Rep. of Germany

Filed Mar. 6, 1980, Ser. No. 127,778

Claims priority, application Fed. Rep. of Germany, Mar. 9, 1979, 2909227

Int. Cl.³ B23B *5/18;* **B24B** *5/00*

U.S. Cl. 82—9 **32 Claims**

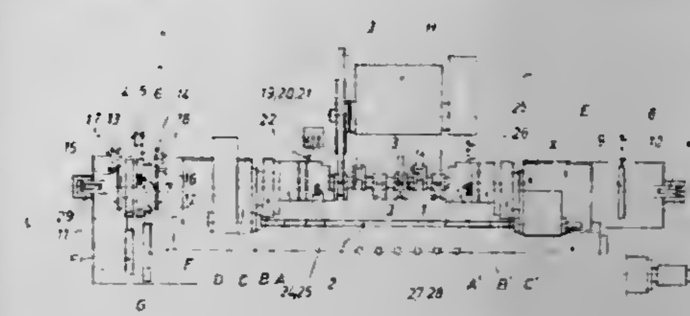

1. In a machine tool of the type including at least one headstock and one tailstock and two clamping heads each coupled with one of said stocks for holding and rotating a workpiece which has a longitudinal axis and portions to be machined which are transversely offset from said longitudinal axis and also offset angularly relative to one another, a combination comprising

at least one indexing head intermediate the headstock and the one clamping head coupled therewith, said indexing head being connected with said one clamping head for rotation about an axis of rotation of said headstock;

first means on said indexing head for displacement of the same transversely of said axis of rotation by a distance corresponding to the respective transverse offset; and

second means for selectively indexing said indexing head irrespective of whether said one clamping head is rotating or stationary.

4,297,927

SHEET METAL POSITIONING AND GRIPPING APPARATUS AND METHOD

Naoki Kuroda, Kyoto, Japan, assignor to The Warner & Swasey Company, Cleveland, Ohio

Filed Mar. 6, 1980, Ser. No. 127,800

Claims priority, application Japan, Mar. 24, 1979, 54-34721

Int. Cl.³ B26D *7/01*

U.S. Cl. 83—36 **29 Claims**

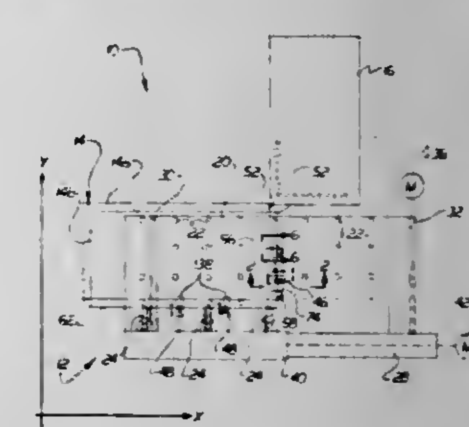

9. An apparatus comprising cutter means for cutting sheet material workpieces, support means for at least partially supporting a sheet material workpiece, movable holder means for holding the sheet material workpiece during cutting of the workpiece by said cutter means, means for moving said holder means relative to said support means to change the position of

the sheet material workpiece held by said holder means relative to said cutter means, and positioning means for positioning the sheet material workpiece relative to said holder means, said positioning means including first gripper means for gripping the sheet material workpiece and moving the workpiece in a first direction relative to said support means and said holder means and second gripper means for gripping the workpiece and moving the workpiece in a second direction relative to said support means and said holder means, said second gripper means including means for moving the sheet material workpiece and said first gripper means in the second direction relative to said support means while said first gripper means is gripping the workpiece.

4,297,928
GUARD FOR SAWING MACHINES
Gino Benuzzi, Bologna, Italy, assignor to Giben Impianti S.p.A., Pianoro, Italy
Filed May 28, 1980, Ser. No. 154,158
Int. Cl.³ B27B *11/10; 5/29*
U.S. Cl. 83—57 **10 Claims**

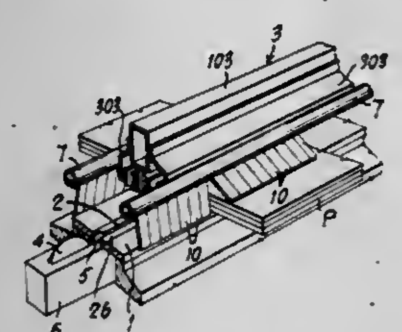

1. In a sawing machine of the type comprising a horizontal workpiece support table (1) having a straight longitudinal slot (2) defining a cutting line, a sawing tool (4) mounted on a carriage (6) reciprocably movable along a path parallel to and beneath said cutting line, and a longitudinal pressure bar (3) arranged above said workpiece support table (1), said pressure bar (3) extending along the entire length of said cutting line and movable upwardly and downwardly with respect to said workpiece support table (1) so as to be capable of blocking thereon a workpiece (P) to be sawed, the improvement comprising

(a) a first safety device comprising a protective barrier apron extending along both sides of said cutting line, said protective barrier apron comprising a plurality of slats (10) hingedly mounted, for swinging movement through a predetermined angle of oscillation, on longitudinal apron rods (7) arranged at both sides of said cutting line; and

(b) a second safety device comprising a longitudinal inner contact bar (14) and a longitudinal outer contact bar (13) hangingly mounted on each side of said pressure bar (3) for vertical movement with respect thereto, said inner and outer contact bars (13, 14) being adapted to cooperate, upon being lifted with control devices (19, 20) acting on the control circuit of at least the cutting saw (6).

4,297,929
SEPARATOR AND FEEDER FOR A STRIP OF FLEXIBLE BAGS
Warren J. Schieser, Dublin, and Stanley E. Vickers, Hideaway Hills, both of Ohio, assignors to Liqui-Box Corporation, Worthington, Ohio
Filed Dec. 20, 1979, Ser. No. 105,567
Int. Cl.³ B26D *7/00;* **B65B** *3/00*
U.S. Cl. 83—110 **28 Claims**

1. A separator and feeder for separating a flexible strip at successive longitudinally-spaced transverse intervals comprising a vertically-reciprocable separator means extending transversely, means for intermittently reciprocating said separator means, conveyor means for intermittently and positively advancing the strip longitudinally to said separator means and for intermittently and positively moving the separated part of the strip away from said separator means, and means for timing the reciprocating of said separator means and said conveyor means; said conveyor means including a first set of rolls comprising upper and lower transversely-extending draw rolls disposed ahead of said separator means for advancing the strip to the separator means and comprising a lower gripping roll and a pair of axially-spaced upper gripping rolls to provide a passage so that upward projections on the strip can pass between said upper rolls, said conveyor means also including a discharge conveyor disposed just beyond said separator means which includes a second set of upper and lower transversely-extending rolls and a third set of upper and lower transversely-

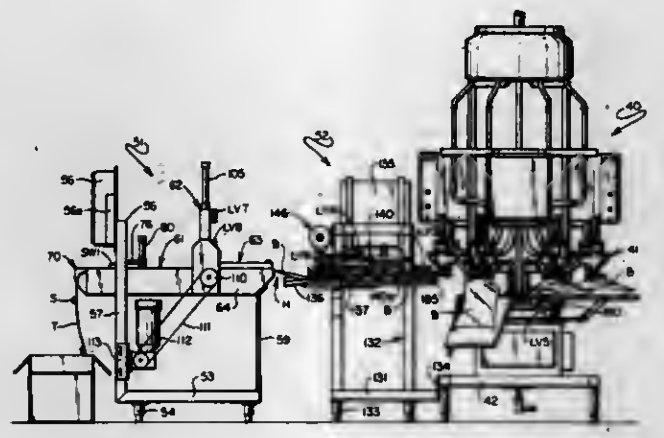

extending rolls spaced longitudinally beyond the second set, laterally-spaced gripping bands passing continuously around the respective lower and upper rolls of the second and third sets to grip the strip therebetween, said second and third sets of rolls having axially-spaced upper rolls to provide a passage in alignment with the first-named passage, said bands on the upper rolls of the second and third sets being divided into two laterally-spaced groups carried by the upper rolls of the respective second and third sets with said passage therebetween, each laterally-spaced group being carried by a frame mounted for swinging movement around the axis of the laterally-spaced upper rolls of the second set, and means for intermittently producing said swinging movement to release the gripped severed portion of the strip in timed relationship to the intermittent movement of the conveyor means.

4,297,930
STRIP CUTTER HAVING ROTATABLE CUTTING BLADE AND STRIP DEFLECTING MEANS
Dwayne H. Putzke, Issaquah, Wash., assignor to CX Corporation, Seattle, Wash.
Filed Sep. 4, 1979, Ser. No. 72,426
Int. Cl.³ B26D *5/20*
U.S. Cl. 83—156 **4 Claims**

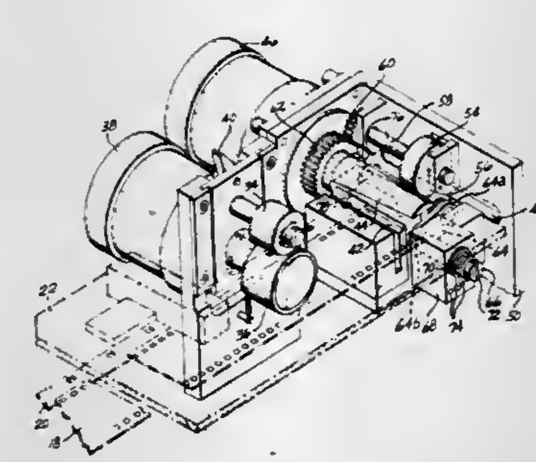

1. A photographic processing apparatus for severing an advancing strip into successive segmental lengths and for mechanically segregating these segmental lengths in conjunction therewith, said apparatus comprising:

strip feed means for advancing said strip in a lengthwise direction;

strip guide means for guiding the advancing strip past the cutting station in a predetermined path of advancement continuing past said cutting station;

cutter blade means mounted at said cutting station and operable to sever from the strip segmental lengths thereof that have advanced past said cutting station, said blade means having a home position wherein it permits passage of the strip along said path of advancement before severance and being movable through a cutting stroke from said home position and back into said home position, said blade means further having a strip deflecting position wherein it permits passage of the advancing strip beyond said cutting station while deflecting the strip from said path of advancement before severance;

blade actuating means operable to move the blade means into and from said home and deflecting positions and through said cutting strokes in timed relation with strip advancement positionings effected by said strip feed means; and

ejector means for assisting the advancement of said segmental lengths away from said cutting station after severance, said ejector means including a first roller mounted above the path of advancement of said strip beyond said cutting station, said first roller being drivingly coupled to said blade means such that said first roller rotates in response to movement of said blade means, said first roller being clutched so that it rotates only in response to movement of said blade means from said cutting stroke toward said home position, a pressure roller rotatably mounted below the path of advancement of said strip beyond said cutting station, said first roller and said pressure roller cooperating to form a nip, said severed strip segment engaging said nip after passing said cutting station and biasing means associated with said pressure roller for biasing said pressure roller toward said first roller.

4,297,931
DOUBLE ENDED METAL CLEANING SHEAR
Kenneth R. Lessard, Albany, Ga., assignor to Econ Scrap Shear Co., Albany, Ga.
Filed Jan. 23, 1980, Ser. No. 114,336
Int. Cl.³ B23Q *11/00;* **B26D** *5/12*
U.S. Cl. 83—397 **3 Claims**

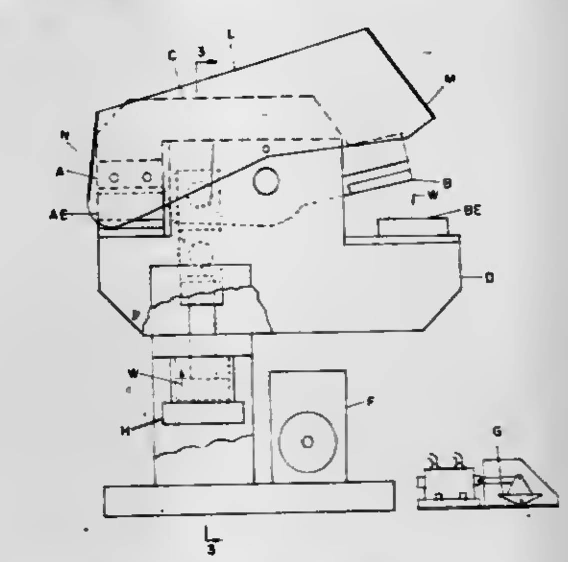

1. In a double ended metal cleaning shear, a horizontally disposed bed, a rocking beam pivotally and rockably mounted on said bed, recessed blades on each end of said bed, shearing blades on both ends of said rocking beam matching and coacting with the recessed blades of the bed, a hydraulic power unit operatively connected to said beam for selectively causing shearing action between the blades on the beam and the blades on the bed, foot control pedal means for controling said hydraulic power unit, and a single safety guard rockably mounted on said pivoted beam, and wherein the safety guard can be rocked to completely guard blades on one end while providing a working space guard on blades on the opposite end, and wherein the safety guard can be rocked to another position to completely guard the other end blades while leaving a working space guard on the first named blades, and wherein the hydraulic power unit includes a cylinder for operating the cutting stroke of the blades on one end when the cylinder moves in one direction and operates the cutting stroke of the blades on the opposite end when the cylinder moves on the returning stroke.

4,297,932
CHEESECAKE CUTTING MACHINE
John J. Wells, Jr., 8818 Via Andar, San Diego, Calif. 92122, and Donald R. Kleine, El Cajon, Calif., assignors to John J. Wells, Jr., National City, Calif.
Filed Mar. 24, 1980, Ser. No. 133,115
Int. Cl.³ B26D *3/24*
U.S. Cl. 83—581.1 **6 Claims**

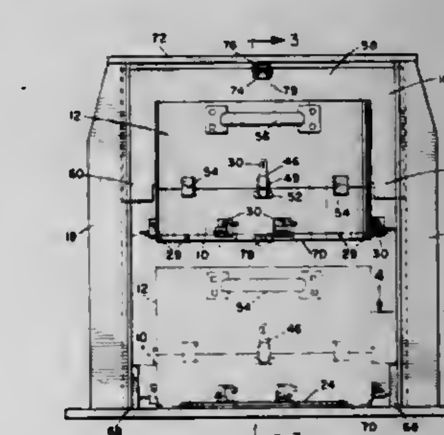

1. A slicing apparatus comprising:

an open ended cutting cylinder;

a plurality of wires, each being longer than the diameter of the cutting cylinder;

a plurality of wire retaining means mounted on the cutting cylinder for securing the one ends of the wires at respective annularly spaced locations about the cutting cylinder;

a plurality of adjustable tensioning means mounted on the cutting cylinder for holding the other ends of the wires tightly across the cutting cylinder, the tensioning means being annularly spaced about the cutting cylinder so that each wire extends substantially diametrically across the cutting cylinder, through its central axis; and

means for supporting the cutting cylinder for vertical reciprocation along the central axis of the cutting cylinder, including:

a generally horizontal planar base,

a pair of spaced apart vertically extending tracks mounted on the base,

an open ended guide cylinder having substantially the same diameter as the cutting cylinder,

a yoke mounted to the guide cylinder and having side edges slidably engaged with respective ones of the tracks so that the guide cylinder can be vertically reciprocated about its central axis, and

releasable latch means for attaching the cutting cylinder beneath the guide cylinder with the central axes of the cylinders in substantial alignment.

4,297,933

ELECTRONIC MUSICAL INSTRUMENT FOR TONE FORMATION BY SELECTABLE TONE SYNTHESIS COMPUTATIONS

Tetsuo Nishimoto, Hamamatsu, Japan, assignor to Nippon Gakki Seizo Kabushiki Kaisha, Hamamatsu, Japan

Filed Nov. 14, 1979, Ser. No. 94,084

Claims priority, application Japan, Nov. 16, 1978, 53-141466

Int. Cl.³ G10H ***1/06, 5/00***

U.S. Cl. 84—1.01 **6 Claims**

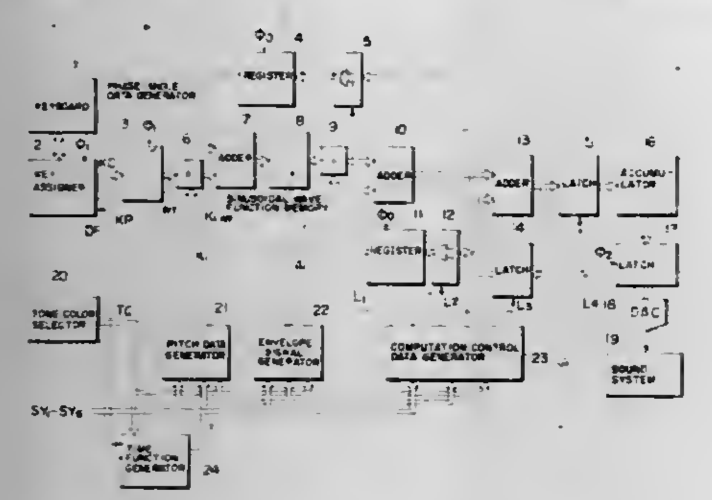

1. An electronic musical instrument comprising:

a tone property seleting device for selecting a property of tones to be produced;

keyboard keys for designating note names of tones to be produced;

a computation control data generation circuit for storing different sets of computation control data corresponding to respective properties of tones to be produced and delivering out a selected set of the control data corresponding to the selected property of each tone to be produced; and

a tone signal forming circuit including computation performing circuitry for implementing a set of arithmetic or trigonometric computations determined from among a plurality of available implementable computations in accordance with the computation control data delivered by said computation control data generation circuit and thereby forming a tone signal of a note designated by said key and of a property selected by said selecting device, each set of control data causing said tone signal forming circuit to implement a set of different mathematical computations, whereby as a result of said different computations, a tone of different property is generated.

4,297,934

DISPLAY DEVICE FOR AUTOMATIC RHYTHM PERFORMANCE APPARATUS

Akio Imamura, and Akiyoshi Oya, both of Hamamatsu, Japan, assignors to Nippon Gakki Seizo Kabushiki Kaisha, Hamamatsu, Japan

Filed Apr. 22, 1980, Ser. No. 142,757

Claims priority, application Japan, Apr. 24, 1979, 54/55656[U]

Int. Cl.³ G10F ***1/00***

U.S. Cl. 84—1.03 **6 Claims**

1. A display device for an automatic rhythm performance apparatus of the type having a tempo generator which generates a sequence of tempo pulses, and having a switch that is actuated to initiate the running of a rhythm performance, comprising:

means for forming a first digital display signal representing a tempo corresponding to said tempo pulses generated by said tempo generator;

means for forming a second digital display signal representing a rhythm advancement in accordance with outputs of a counter which is driven by said tempo pulses;

a digital display unit; and

display signal selecting means for selectively carrying out a switching operation so that, under the condition that

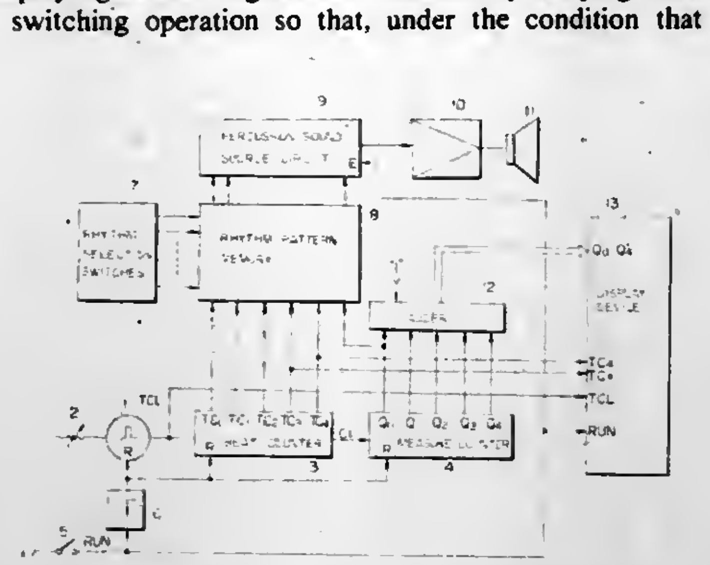

rhythm performance is stopped, said first digital display signal is applied to said display unit and, under the condition that said rhythm performance is running, said second digital display signal is applied to said display unit.

4,297,935

DIVIDER KEYER CIRCUIT FOR SYNTHESIS ORGAN

Ray B. Schrecongost, Park Ridge, Ill., assignor to Marmon Company, Chicago, Ill.

Filed Feb. 24, 1978, Ser. No. 880,829

Int. Cl.² G10H ***5/02***

U.S. Cl. 84—1.01 **7 Claims**

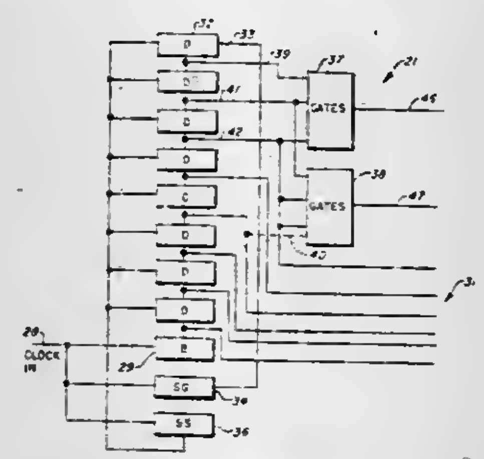

1. A divider keyer circuit arrangement for a 61 note electronic synthesis organ keyboard having a plurality of harmonic controls which includes four identical forty pin integrated circuit packages, each of which comprises:

a first note-related keyer section having six keyer groups each of which is coupled to a different keying wave form input line and each of which has a plurality of keyers coupled to a different harmonic control line;

a first primary divider section coupled to a first clock line to a top octave clock generator output for said first note and including a series of dividers operable to divide said generator output successively by two to produce a series of tone signal divider outputs and further including means for generating a synchronization signal on said first clock line and further including synchronization signal detection means coupled to said first clock line for detecting said synchronization signal and resetting said dividers in response thereto;

a first third-harmonic divider section coupled to a first third-harmonic clock line to a top octave clock generator output for a note third harmonically related to said first note, said third-harmonic top octave clock generator output being utilized as a primary divider section top octave source for a note on a different one of said four identical integrated circuit packages, and including a series of dividers operable to divide said output successively by two to produce a series of tone signal divider outputs and further including synchronization signal detection means coupled to said first third-harmonic clock line for detecting a synchronization signal placed on said clock line by the synchronization signal generating means of the primary divider section which receives said third-harmonic top octave clock generator output as a source and is located on said different one of said four identical integrated circuit packages and for resetting said third-harmonic dividers in response thereto; and

a second note-related keyer section having five keyer groups, a third note-related keyer section having five keyer groups, a second primary divider section, a third primary divider section, a second third-harmonic divider section, and a third third-harmonic divider section;

said first note-related keyer section being coupled to said tone signal divider outputs from said first primary divider section, to said tone signal divider outputs from said first third-harmonic divider section, and to one tone signal divider output from said second primary divider section to borrow a signal equal to the fifth harmonic of said first note from said second primary divider section;

said second note-related keyer section being coupled to tone signal divider outputs from said second primary divider section, to tone signal divider outputs from said second third-harmonic divider section, and to one tone signal divider output from said third primary divider section to borrow a signal equal to the fifth harmonic of said second note from said third primary divider section; and

said third note-related keyer section being coupled to tone signal divider outputs from said third primary divider section, to tone signal divider outputs from said third third-harmonic divider section, and to one tone signal divider output from said first primary divider section to borrow a signal equal to the fifth harmonic of said third note from said first primary divider section.

7. In a divider keyer integrated circuit package for a synthesis electronic organ having a top octave signal source, a progressive duty cycle tone signal generation circuit comprising:

divider means coupled to said top octave signal source for producing a series of 50% duty cycle square wave outputs;

first gating means for combining a plurality of said square wave outputs and providing as a first gating means output a rectangular wave having a 37.5% duty cycle for enhancing the second and fourth harmonics and reducing the level of third harmonics;

second gating means for combining a plurality of said square wave outputs and providing as a second gating means output a rectangular wave having a duty cycle between 50% and 37.5% for providing a smooth transition between said harmonically enriched 37.5% duty cycle rectangular wave and said 50% duty cycle square wave; and

keyer means coupled to said divider means outputs, said first gating means output and said second gating means output for keying said square waves and rectangular waves.

4,297,936

RETRACTABLE FRET SYSTEM FOR STRINGED INSTRUMENTS

Martin J. Mouton, 619 Roseland Pkwy., Harahan, La. 70123

Filed Apr. 9, 1980, Ser. No. 138,715

Int. Cl.³ G10D ***3/06***

U.S. Cl. 84—314 R **6 Claims**

1. A stringed, musical instrument having frets, comprising:

an elongated neck having an upper surface;

a series of vibratable musical strings stretched along the length of said neck and supported above and spaced from said upper surface;

a series of laterally disposed, longitudinally spaced frets mounted on said neck and vertically moveable into and out of protruding disposition above said upper surface and in juxtaposition to said strings; and

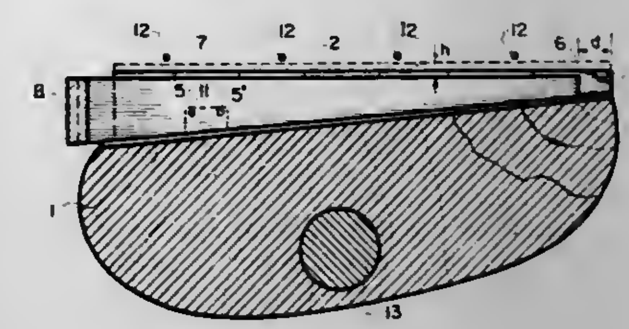

manual actuating means for moving said frets into and out of said protruding disposition during play of the instrument when so desired by the player.

4,297,937

ARM AND KEY BED ASSEMBLY FOR A PIANO AND THE LIKE

Robert J. Mayerjak, Torrington, Conn., assignor to Currier Piano Company, Inc., Marion, N.C.

Filed Sep. 21, 1979, Ser. No. 77,851

Int. Cl.³ G10C ***3/04***

U.S. Cl. 84—430 **8 Claims**

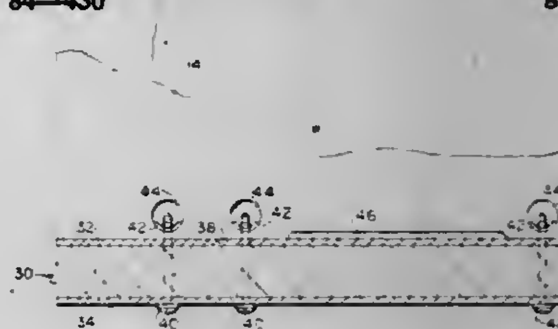

1. An arm and key bed assembly in a piano or like instrument having a keyboard comprising:

a laminated key bed having an upper bed surface on which the keyboard of the instrument is mounted and a parallel lower surface, the laminates being securely bonded together to form a rigid bed, the outer laminates defining the upper and lower surfaces of the bed being sheet metal laminates;

an arm joined with one end of the key bed and defining a shelf against which one of said surfaces of the bed defined by the sheet metal laminates rests at the one end of the bed,

a nut mounted within the arm at a position spaced from the shelf, the axis of the hole through the nut intersecting the shelf in generally perpendicular relationship; and

a threaded fastening member extending through the laminated key bed and the arm generally perpendicular to the shelf and in threaded engagement with the nut for drawing said one surface of the bed defined by the sheet metal laminates and the shelf into clamping engagement at high force levels.

4,297,938

ELECTRONIC TUNING AID WITH DIGITAL READOUT

Archie D. Kirby, 4170 N. Marine Dr., Chicago, Ill. 60613

Filed Sep. 12, 1979, Ser. No. 74,674

Int. Cl.³ G10G ***7/02***

U.S. Cl. 84—455 **11 Claims**

1. Compact portable apparatus for use in sensing and displaying in digital terms the frequency of musical instrument strings vibrating in either damped or undamped mode, and comprising in accordance with the invention:

(a) a housing for placement on the instrument in adjacency to a complement of strings thereon;

(b) a vibration sensing probe constituting a movable part of said housing and having a sensing head positionable relative to any selected string of the complement;
(c) said head having respectively overlying and opposite underlying parts adapted to straddle the selected string, one of said parts including a light source and the other opposite part including optical slit means positioned such that the selected string will vibrate crosswise of the slit and substantially along the length thereof and modulate the source light accordingly;
(d) photosensitive means positioned relative to said slit means such that it is activated by the string-modulated source light;
(e) first circuit means in said housing activated by said photosensitive means to produce frequency analogue signals from said string-modulated source light;

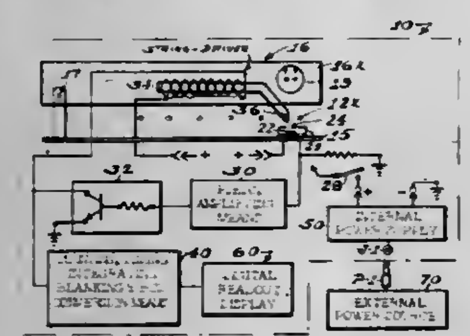

(f) further circuit means in said housing converting said signals into digital control signals;
(g) display means carried by said housing and activated by said digital control signals to provide a luminous readout of the sensed string frequency in digital notation;
(h) said probe including electromagnetic string-driving means having a winding traversed by string-modulated photoelectric current and a salient pole piece producing a string-vibrating flux varying with the existing sensed string frequency located and disposed in driving adjacency to the selected string as an incident to operative placement of the sensing head relative to such string, whereby magnetically responsive strings will be driven in sustained vibration at whatever sensed frequency the string happens to be tuned.

4,297,939
AMMUNITION FEEDER

Tomas R. Castillo, Fountain Valley, and Arthur L. Gardiner, Tustin, both of Calif., assignors to The United States of America as represented by the Secretary of the Army, Washington, D.C.

Filed Jun. 8, 1979, Ser. No. 47,596
Int. Cl.³ F41D *10/08*

U.S. Cl. 89—33 L 1 Claim

1. In combination, a recoil-operated gas assisted gun having a linked ammunition feeder means (20) arranged thereon for movement normal to the gun axis; an ammunition-link guide housing (28) swingably mounted on the gun for movement from a downloader position to an upfeed position; three sets of deflectable spring-urged pawls (64) carried within the link guide housing in vertically-spaced relationship to each other for supportably engaging undersurface areas of adjacent ammunition links, thereby accurately positioning the supported ammunition rounds; said spring-urged pawls including an upper set of pawls, an intermediate set of pawls, and a lower set of pawls; the pawls being dimensioned so that the upper set of pawls supports a significant portion of the weight of the uppermost ammunition round, the intermediate sets of pawls supports a significant portion of the weight of the intermediate ammunition round, and the lower set of pawls supports the weight of the remaining rounds in the linked ammunition system; each pawl having a stop surface thereon normally abutting against an internal shoulder (69) on the link guide housing, whereby at least a portion of the weight of the associated ammunition round is transmitted to the guide housing; each pawl having an actuator arm (66) extending beyond an outboard face of the link guide housing; a manually-actuatable plate (70) slidably arranged on the outboard face of the link guide housing for vertical movement in a plane parallel to a plane passing through the pivot axes of the swingable pawls;

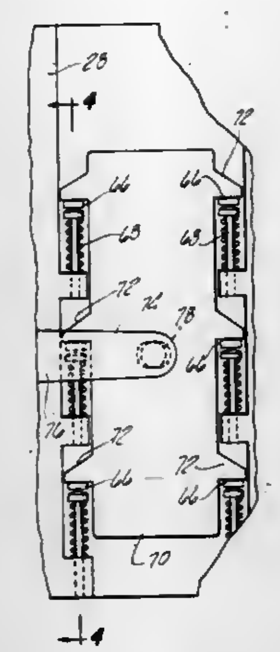

said plate having thrust surfaces (at 72) engageable with the pawl actuator arms, whereby plate movement in the downward direction causes the pawls to be pivoted outwardly to positions disengaged from the ammunition links, so that the linked ammunition can be downloaded out of the link guide housing.

4,297,940
PROTECTIVE WORKPLACE AND SYSTEM

Truman D. Hainline, Peoria, Ill., assignor to Tellus Machinery Corporation, Peoria, Ill.

Filed Jan. 31, 1980, Ser. No. 117,242
Int. Cl.³ F24F *7/00*

U.S. Cl. 98—33 R 9 Claims

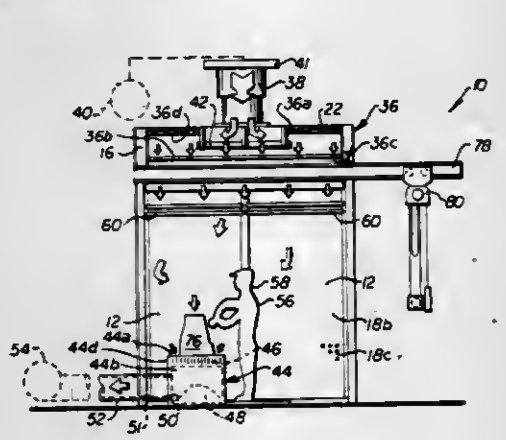

1. A protective modular workplace apparatus comprising:
(a) a plurality of connected walls at least partially enclosing a workplace, said walls forming a doorway therewith, each of said walls including a first reinforcing member connected to a pair of spaced panels, at least one of said panels being a sound-absorbing panel, a sound-absorbing material retained by said first reinforcing members and said panels, and a second reinforcing member attached to an edge surface of each wall, said second reinforcing member of one wall connected to a second reinforcing member of an adjacent wall;
(b) said first reinforcing member includes a rib and a pair of spaced flanges, said first member rib being recessed between said panels, said first member flanges and panels having coextensive portions terminating in side-by-side relationship, said coextensive portions being affixed, and second reinforcing member includes a rib and a pair of spaced flanges, said second member rib forming an edge of said wall, said coextensive portions of said first member flanges and panels being recessed within said second member abutting said second member rib, said first and second reinforcing members being in reciprocal relationship;
(c) a roof connected to said walls, said roof including an upper panel spaced from a lower panel, said upper panel having means, such as a first flower, for urging ventilating air between said panels, said first blower having a deflector associated therewith, said lower panel having openings formed therein, said openings being of a construction sufficient for permitting said air to pass therethrough and into said workplace; and
(d) means, in a portion of said walls, for urging said ventilating air from said workplace, said means including a second blower substantially matched to said first blower.

4,297,941
MULTIPLE SAUCER SANDWICH COOKING DEVICE

Denise Gallina, 68 E. Prospect St., Waldwick, N.J. 07463

Filed May 4, 1979, Ser. No. 35,916
Int. Cl.³ A47J *37/00*

U.S. Cl. 99—332 1 Claim

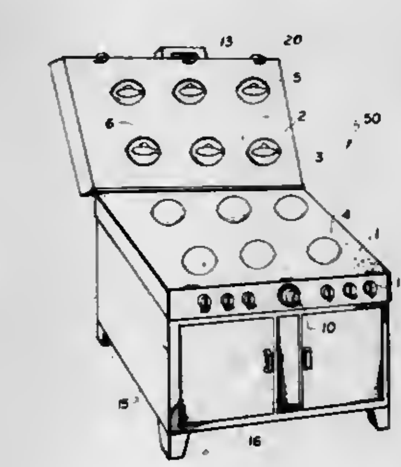

1. A multiple saucer sandwich cooking oven comprising, a base plate having a first plurality of sandwich sized mold indentations therein, a top plate pivotally mounted to said base plate having a second plurality of sandwich sized mold indentations therein corresponding to said first plurality of indentations in number and positioning, heating means connected to said top and base plates, said first and second plurality of indentations define a plurality of sandwich molds therebetween when said top plate is pivoted into its closed position with said base plate, whereby said heating means is activated for cooking a sandwich assembly positioned within each of said sandwich molds, a resistance heating element in each of said mold indentations in said top plate having a selected configuration for branding the surface of a sandwich assembly prepared in each of said sandwich molds, said heating means comprising resistance electric heating elements, said mold indentations being in a saucer shape and said resistive heating element being in the shape of a disc, and said heating element further comprising a timer for setting the heating element at a predetermined time thereby cooking the sandwich assembly to a desired degree, and wherein said sandwich molds are coated with Teflon so that the sandwich assembly does not stick to the molds.

4,297,942
METHOD AND APPARATUS FOR FLAVORING AND SURFACE TREATMENT OF MEAT PRODUCTS

Clark K. Benson, Millbrae; Andrew A. Caridis, Foster City, and Arthur A. Nilsen, San Francisco, all of Calif., assignors to Heat and Control, Inc., San Francisco, Calif.

Continuation of Ser. No. 489,131, Jul. 17, 1974, abandoned. This application Jan. 28, 1976, Ser. No. 653,192
Int. Cl.³ A47J *37/00*

U.S. Cl. 99—386 5 Claims

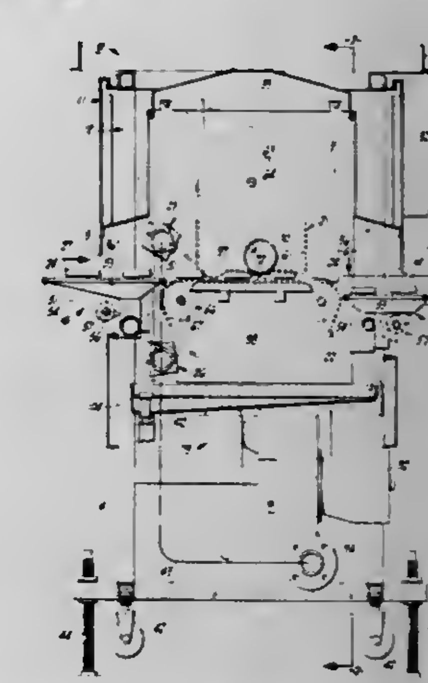

1. Apparatus for imparting surface treatment such as searing and branding to a food product comprising a frame, a housing on said frame and having an inlet and an outlet serving to permit the receiving and discharging of the product with respect to said housing; horizontally spaced apart, inlet and outlet conveyor means extending respectively into said housing inlet and outlet, branding means movably arranged in said housing between said spaced apart inlet and outlet conveyor means to receive the product discharged from said inlet conveyor means and serving to convey the product horizontally within the housing for treatment and to discharge the product upon said outlet conveyor means, said branding means remaining at all times within said housing and including a first branding mechanism serving to mark the top side portion of the product, and a second branding mechanism serving to mark the bottom or underside portion of the product and to support the product and move the same from said inlet to said outlet conveyor means, each said branding mechanisms comprising an endless belt structure formed of spaced apart parallel, interlinked rod-like branding elements, first and second drive means serving to drive in synchronism said first and second branding mechanisms respectively, the drive means for said first branding mechanism serving to support the top run of the endless belt structure for the first branding mechanism and permitting the bottom run of said belt structure to drape downwardly for engagement with the top surface of the product flame heating means in said housing to cause flame to impinge upon such food product and upon said rod-like branding elements as the food product is moved by the branding means from said inlet to said outlet conveyor means, and power means serving to drive said inlet and outlet conveyor means and said first and second drive means for the branding means.

4,297,943
CAGE ASSEMBLY FOR PRESS ASSEMBLY

Victor R. Laurich-Trost, 34600 McAfee Dr., Solon, Ohio 44139

Filed Dec. 10, 1979, Ser. No. 101,899
Int. Cl.³ B30B *9/06*

U.S. Cl. 100—129 5 Claims

1. In a screw press apparatus of the type for expressing liquid from a processed material including at least one drainage sec-

tion for receiving the material to be processed therethrough including, in combination, a removable window-like cage assembly to provide a liquid drainage system which is accessible for removal completely from the exterior of the apparatus, said window-like cage assembly including at least pair of generally semi-cylindrical panel members each having a polygonal window-like opening, each panel including a plurality of parallel elongated screen bar elements circumferentially mounted within the opening of said panel so as to extend radially in respect to the longitudinal central axis of the press, selectively adjustable means adapted for detachably connecting each of said panels to the press apparatus to enable the panels to be removed completely from the exterior of said apparatus, resilient spring means disposed as spacers between adjacent of said screen bar elements adapted for maintaining said screen bar

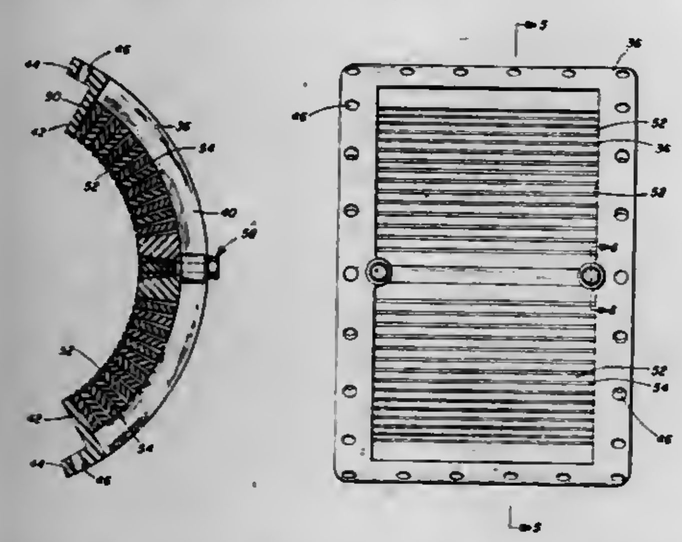

elements in resilient circumferentially spaced relationship within each of said panels, selectively adjustable wedged block means adapted for camming co-acting engagement for holding said screen bar elements in circumferentially spaced relationship with said window-like openings, said wedge-block means being disposed centrally of said screen bar elements and including a radially adjustable wedge-block member and a pair of elongated cam-like wedge block members disposed on either side of said adjustable wedge block member adapted for selective radial movement toward and away from the longitudinal central axis of said press apparatus for circumferentially moving associated of said screen bar elements resiliently toward and away from one another for selectively maintaining a predetermined circumferential pressure on said screen bar elements thereby to give a predetermined drainage area through the spaces between adjacent of said screen bar elements.

4,297,944

PRINT HAMMER DRIVING MEANS FOR IMPACT PRINTERS

Shohachi Nihira, Tanashi, Japan, assignor to Citizen Watch Co., Ltd., Tokyo, Japan

Filed Aug. 15, 1979, Ser. No. 66,775

Claims priority, application Japan, Aug. 28, 1978, 53-104516

Int. Cl.³ B41J *9/36*

U.S. Cl. 101—93.31 **9 Claims**

1. A printer hammer driving means for impact printers, comprising:

a rotatably mounted type drum having a plurality of columns,

a plurality of type characters arranged circumferentially spaced from each other for each column,

a plurality of print hammers movable towards said type drum for printing,

each of said print hammers having a print head corresponding to each column,

a hammer spring provided to bias each print hammer towards said type drum,

a positioning spring adapted to bias said print hammer towards a waiting position,

a lever movable along a path for deflecting said hammer spring,

a snatch roll having at least one tooth engageable with said lever for deflecting said hammer spring so as to produce an elastic force greater than the force of said positioning spring,

electromagnetic means operative to hold said lever out of engagement with said snatch roll during de-energization and to bring said lever into engagement with said snatch roll upon energization,

means for rotating said snatch roll and said type drum in a predetermined rotational ratio, and

means for actuating said electromagnetic means at a predetermined timing,

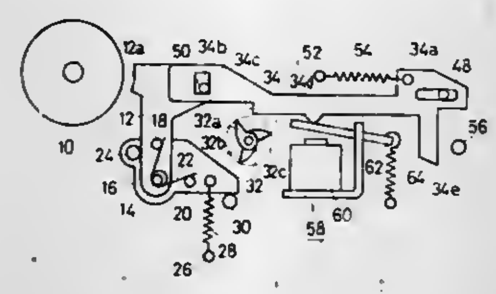

said lever and snatch roll being disposed such that said engagement therebetween disengages after a predetermined angular rotation of said snatch roll, and

an elongated slot provided in said lever for permitting said lever to be reciprocated away from said type drum by said snatch roll, and a stop member being positioned to limit the reciprocal motion of said lever and to convert it to rotational motion, whereby said lever is moved by engagement with said snatch roll for a predetermined period to defect said hammer spring and after said predetermined period continued rotational movement disengages said lever from said snatch roll permitting movement of said lever and said print hammer towards said type drum by said deflected hammer spring.

4,297,945

RESIN ORIGINAL PATTERN PLATE AND METHOD FOR TRANSFERRING RELIEVED PATTERN THEREOF TO THERMOPLASTIC RESIN MATERIAL

Takezo Sano; Tadanori Inoue, both of Ibaragi, and Yukikazu Uemura, Toyonaka, all of Japan, assignors to Sumitomo Chemical Company, Ltd., Japan

Division of Ser. No. 682,724, May 3, 1976, Pat. No. 4,156,384, which is a continuation-in-part of Ser. No. 427,655, Dec. 26, 1973, abandoned. This application Mar. 9, 1979, Ser. No. 19,143

Claims priority, application Japan, Dec. 28, 1972, 67-1393; Dec. 28, 1972, 67-1394

The portion of the term of this patent subsequent to May 29, 1996, has been disclaimed.

Int. Cl.³ B41N *1/12*

U.S. Cl. 101—395 **3 Claims**

1. A resin original pattern plate for use in transferring a relieved pattern, said pattern plate (a) having an elastic modulus of at least 10 kg/cm² at 200° C., (b) a thickness of from about 0.1 mm to about 5 mm, and (c) being prepared by controlling the cross-linkability of a photo-polymerizable resin composition and then photo-polymerizing, wherein said photo-polymerizable resin composition is (1) a photo-polymerizable resin composition comprising, as its major ingredients, a polymer free of cross-linkable double bonds, a polyfunctional monomer, a photosensitizer, and a thermal polymerization inhibitor, said poly-functional monomer constituting about 10 to about 90% by weight of the total weight of said composition and said polymer free of cross-linkable double bonds having a viscosity of at least 10^3 poise at 200° C. or (2) a photo-polymerizable resin composition comprising, as its major ingredients, a cross-linkable polymer, a monomer, a photosensitizer, and a thermal polymerization inhibitor, said cross-linkable polymer having a molecular weight of at least 1,000 and containing double bonds in an amount of at least one for each 1,000 molecular weight, and said monomer constituting 5 to 50% by weight of the total weight of the composition.

4,297,946

EXTENDED SHAPED CHARGE AND METHOD OF MAKING SAME

Boris E. Paton, ulitsa Chkalova, 41-a, kv. 26; Vladimir M. Kudinov, ulitsa Filatova, 1/22, kv. 51; Leonid A. Volgin, ulitsa Erevanskaya, 14 g, kv. 33; Vladimir G. Petushkov, ulitsa Pugacheva, 19a, kv. 6; Jury P. Bushtedt, bulvar Likhacheva, 3, kv. 7; Anatoly Y. Koroteev, Sapernoe pole, 9/21, kv. 27, and Viktor A. Kotov, Goloseevo, 3, kv. 7, all of Kiev, U.S.S.R.

Filed Dec. 5, 1978, Ser. No. 966,642

Int. Cl.³ C06C *7/02;* **F42B** *3/08;* **C06B** *21/00*

U.S. Cl. 102—307 **11 Claims**

1. An extended shaped charge comprising a high explosive material and a one piece, integral tubular body, a profile of the tubular body having a convex portion shaped to the form of a first curvilinear length and a concaved portion shaped to the form of a second curvilinear length, said tubular body having an integral wall defining a cavity filled with said high explosive material and a charge hollow disposed on an exterior side of the concaved portion of the profile, the wall of said tubular body being thinner on the side of the charge hollow, the first and the second curvilinear lengths being respectively portions of first and second closed curves having a common symmetry axis and being internally tangent to each other at a point lying on said symmetry axis, the only contact between the closed curves being at the point of tangency, the first curvilinear length being conjugate with the second curvilinear length so that the width of the charge hollow measured by a chord of the first closed curve between the points of intersection thereof with tangents to the extreme points of the second curvilinear length being not less than a length of a great chord of the second closed curve normal to the symmetry axis of the profile.

9. A method of making an extended shaped charge having a high explosive material contained within a tubular body, the tubular body having a profile with a convex portion shaped to the form of a first curvilinear length and a concaved portion shaped to the form of a second curvilinear length, said tubular body having a wall defining a cavity filled with said high explosive material and a charge hollow disposed on an exterior side of the concaved portion of the profile, the first and the second curvilinear lengths being respectively portions of first and second closed curves having a common symmetry axis and being internally tangent to each other at a point lying on the symmetry axis, the first curvilinear length being conjugate with the second curvilinear length so that the width of the charge hollow measured by a chord of the first closed curve between the points of intersection thereof with tangents to the extreme points of the second conjugate length is not less than a length of a great chord of the second closed curve normal to the symmetry axis of the profile, said method comprising:

filling a tubular member with a high explosive material, the tubular member having a convex portion shaped to the form of a first curvilinear length; and

shaping the tubular member with an element having a convex configuration of a second curvilinear length to thereby deform the tubular member and form a shaped charge having high explosive material contained within a tubular body having a profile with a convex portion shaped to the form of the first curvilinear length and a concaved portion shaped by said element to have the form of the second curvilinear length, the concaved portion being shaped so that the closed curves contact each other only at the point of tangency.

4,297,947

ELECTRIC IGNITER

Eirwyn Jones, Alloway, Scotland, and Michael I. Mitchell, Runcorn, England, assignors to Imperial Chemical Industries Limited, Millbank, England

Filed May 15, 1979, Ser. No. 39,443

Claims priority, application United Kingdom, May 24, 1978, 21735/78

Int. Cl.³ F42C *11/00*

U.S. Cl. 361—248 **45 Claims**

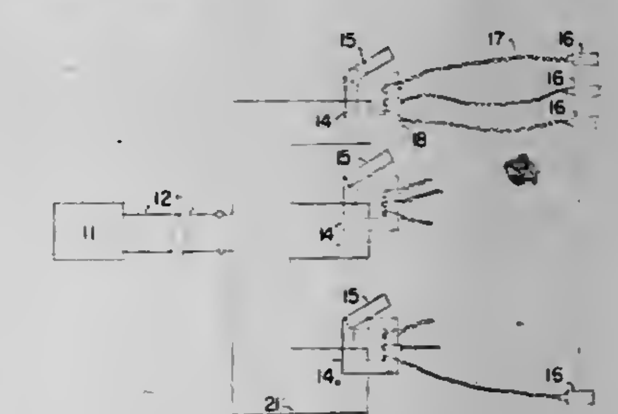

1. An electrically actuatable ignition assembly comprising:

a resistive electric ignition element within a casing and having two electrical connection terminals within the casing; and

a continuous length of insulated electrically conductive wire having its two ends electrically connected to said two terminals of the electric ignition element to form a continuous electrical circuit therebetween and extending outside of the casing without any exposed uninsulated wire joint outside of the casing, a portion of the continuous length of wire providing a loop adapted for electromagnetic coupling to a transformer core.

4,297,948

PROJECTILE

William F. Donovan, Harford City, Md., assignor to The United States of America as represented by the Secretary of the Army, Washington, D.C.

Division of Ser. No. 948,127, Oct. 3, 1978, Pat. No. 4,241,660. This application Mar. 4, 1980, Ser. No. 122,793

Int. Cl.³ F42B *11/22, 13/00*

U.S. Cl. 102—473 **3 Claims**

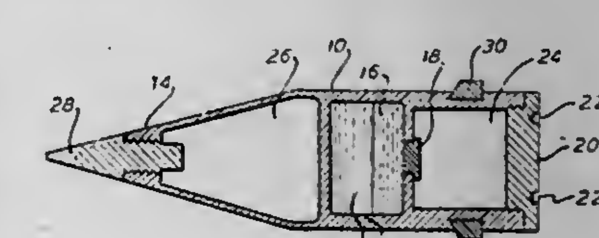

1. A projectile having variable stability, said projectile being arranged to be spin stabilized and comprising:

a casing having a sealed cavity, said cavity shaped to pro-

vide a balanced flow about the longitudinal axis of said projectile;
a first liquid of a given mass contained within said cavity; and
a second liquid of a different density than said first liquid operatively contained within said cavity to eliminate any ullage of said cavity, said second liquid being immiscible in said first liquid, wherein said second liquid is vortically impelled by said projectile spin, wherein said cavity is shaped to provide a balanced flow of said second liquid with respect to the axis of spin as said projectile is trajected, said balanced flow altering the flight stability of said projectile, wherein said first and second liquids completely fill said cavity, and wherein the elimination of said ullage from said cavity provides controlled gyroscopic stability to said projectile.

4,297,949
CLOUD DETONATOR IN SURFACE-LAUNCHED FUEL-AIR EXPLOSIVE MINEFIELD CLEARANCE ROUND
Cecil A. Glass, China Lake, Calif., and Dallas D. Burns, Brooklyn, Minn., assignors to The United States of America as represented by the Secretary of the Navy, Washington, D.C.
Filed Jul. 31, 1979, Ser. No. 62,395
Int. Cl.³ F42B *25/12, 15/12*
U.S. Cl. 102—229 **20 Claims**

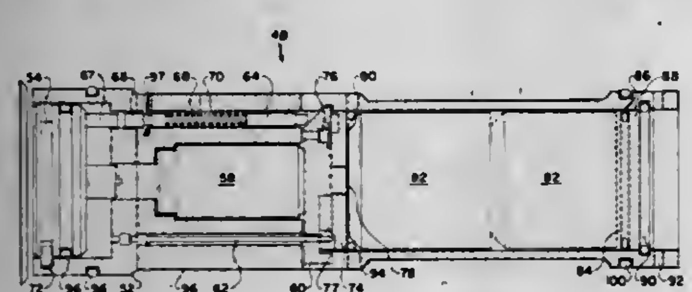

1. A fuel-air cloud explosive round detonation system that launches a detonator for the explosive round comprising;
a mounting for supporting said detonation system;
a launch tube with two segments of different interior diameter inserted in said mounting for aiming said detonator along a predetermined trajectory;
a cloud detonator assembly with an obturator base within said launch tube, said detonator assembly's obturator having an outside diameter which fits within the larger inside diameter of said launch tube but is larger than the smaller interior diameter of said launch tube for placing a time delayed detonation charge in a preset location of said fuel-air cloud; and
an explosive propelling charge placed in said mounting beneath the base of said cloud detonator assembly for launching said cloud detonator assembly;.
whereby said obturator remains in said launch tube when it reaches said smaller interior diameter such that explosive gases from said explosive propelling charge are sealed from the outside atmosphere.

4,297,950
TOW TRUCK
Larry J. Funk, and Eugene A. Bluhm, both of Faribault, Minn., assignors to Nutting Truck and Caster Company, Faribault, Minn.
Filed Mar. 26, 1980, Ser. No. 134,128
Int. Cl.³ B65G *17/42;* **B61B** *13/00*
U.S. Cl. 104—172 BT **12 Claims**

10. In a tow truck having wheels supporting the truck for movement along a path defined by a floor conveyor, a generally vertical tow pin at the front of the truck movable between a lower driving position for driving engagement by such conveyor and an upper retracted position out of driving engagement with such conveyor, and an accumulation bumper at the front of the truck movable between a forwardly projecting normal running position ahead of the tow pin and truck and a rearwardly retracted accumulating position in response to engagement of the bumper with an object ahead of the truck, an improved connecting mechanism between the bumper and tow pin comprising two bell crank members pivoted for rotation on a transverse axis behind the tow pin, with one bell crank member at each side of the tow pin and each bell crank member having a first lever arm projecting upwardly from such pivot and a second lever arm projecting forwardly from such pivot along its side of the tow pin, first and second longitudinally extending connecting links each having a rear end pivotally connected to the upper end of the corresponding first lever arm and a forward end pivotally connected to the bumper and rocking the first lever arms rearwardly in response to movement of the bumper to retracted position, said longitudinally extending connecting links pivotally connecting the first

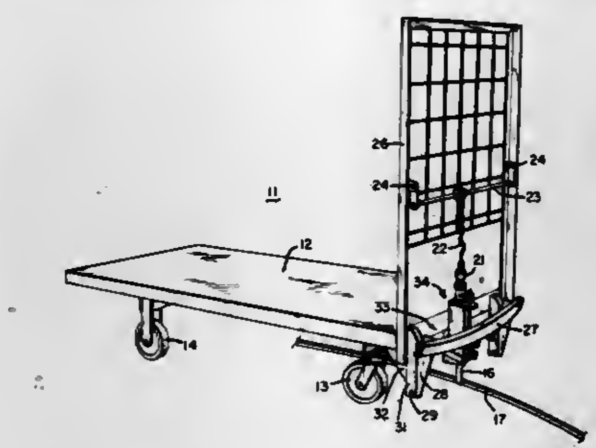

lever arms to the bumper at symmetrically spaced locations transversely from the tow pin, a cross member transversely connecting the forward ends of the second lever arms to each other, a vertically extending lifting rod extending vertically along the tow pin and having a lower end pivotally connected to the cross member between the forward ends of the second lever arms and an upper end connected to the tow pin and lifting the tow pin in response to rearward rocking of the first lever arms by the bumper and connecting links, said tow truck also having a tow pin housing which includes two parallel vertically extending side plates, one of which is located at each side of the tow pin tube, each side plate having a vertical rear edge engaging a front edge of the truck, and each side plate rear edge having a rearwardly extending lower portion projecting beneath the truck, a cross brace portion connecting said lower portions to each other, and a reinforcing bracket between said cross brace portion and truck.

4,297,951
DETACHABLE GRIP FOR COUPLING A CARRIAGE
Roger Laurent, Chambery, France; assignor to Pomagalski S.A., Fontaine, France
Filed Apr. 27, 1979, Ser. No. 34,027
Claims priority, application France, May 2, 1978, 78 13033
Int. Cl.³ B61B *7/20*
U.S. Cl. 104—209 **4 Claims**

1. A detachable grip for coupling a device supporting a load on to the overhead cable of a mono-cable transport installation comprising:
a grip body positioned, when the grip is coupled on to the cable, on one side of the cable;
a pair of jaws carried by the body of the grip and able in their approached position to clamp the cable to fix the body of the grip to the cable, the outer profile of the said pair of jaws being so designed as to be flush with the lower surface of the clamped cable and to form a limited projection on the top of the clamped cable to allow the passing of the jaws over the cable support sheaves and under the cable hold-down sheaves;

said jaws gripping the cable when closed and disengaged from the cable when open, said open jaws allowing the cable to move down and away from the jaws without any lateral movement of said jaws;
a control mechanism carried by the said grip body having a cam means to operate the closing of each jaw and link-rod means to operate the opening of the jaws;
a spindle fixed to the body of the grip and so devised that in the position in which the grip is coupled on to the cable the said spindle extends parallel to and above the cable in the vertical plane of the cable, the said jaws being both mounted symmetrically in rotation on said spindle;
an operating shank extending from each jaw towards said link-rod, with a curved end working in conjunction with the said control mechanism to impart to the said jaws a symmetrical rotation opening and/or closing the grip, the said operating shanks projecting laterally from the jaws on the grip body side while respecting the gauge for passing over cable support sheaves and hold-down sheaves, said

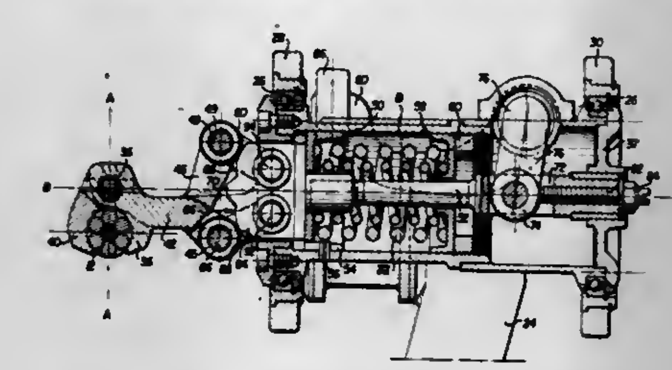

operating shanks being set off in the longitudinal direction of said cable and when said jaws are closed said operating shanks as seen along the longitudinal direction of the cable, are superposed by said cable;
a piston comprising part of said control mechanism so mounted as to slide in the said grip body along an axis perpendicular to the jaw spindle, the curved ends of the operating shanks being arranged symmetrically with the said longitudinal axis and working in conjunction with the said piston;
said cam means being rigidly secured to said piston and working symmetrically in conjunction with the curved ends of the operating shanks in order to exert a cable clamping moment on the said jaws;
said link-rods connecting with play to said curved ends of the operating shanks and the piston in such manner as to pivot the jaws into the open position on the displacement of the piston into said grip body without interfering with the action of the cam transmitting the closing force.

4,297,952
EXPANDABLE TABLE
David Zagaroli, Hickory, N.C., assignor to Zagaroli & Company, Hickory, N.C.
Filed Nov. 19, 1979, Ser. No. 95,253
Int. Cl.³ A47B *1/02*
U.S. Cl. 108—83 **3 Claims**

1. An expandable table comprising:
(a) a frame member including a pair of spaced side rails, end rails connecting said side rails, and four legs extending downwardly from the corners of said frame member;
(b) each of said side rails being integrally formed and nonextensible, said side rails each including an inwardly turned flange extending the length thereof;
(c) an expandable table surface including two planar members resting on said flanges and movable between a first, closed position in which said planar members are arranged in co-planar relationship with adjacent edges abutting and a second, open position with said planar members spread apart along said flanges, but still in co-planar relationship;
(d) an auxiliary planar member, similar in appearance to said two planar members and separate from said table when in said first position but inserted between spaced adjacent ends of said planar members when in said second position;

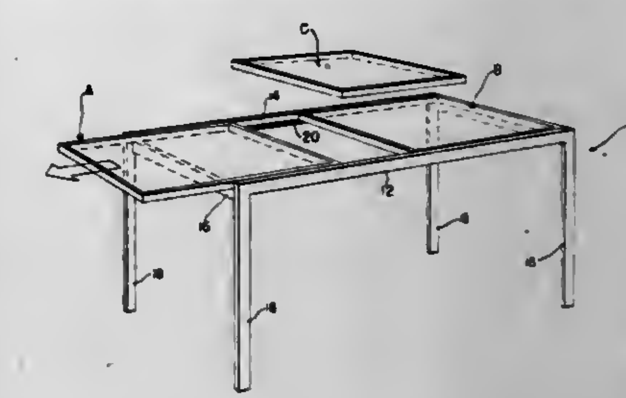

(e) a locking means connecting said side rails and said first two planar members for securing said planar members in said first position and said second position;

4,297,953
EASILY FOLDAWAY STAND
Min C. Shy, 20, Alley 18, La. 109, Hoping St., Yong Ho Twon, Taipei Hsien, Taiwan
Continuation of Ser. No. 945,998, Sep. 26, 1978. This application Jan. 15, 1980, Ser. No. 112,263
Int. Cl.³ A47B *3/08*
U.S. Cl. 108—131 **5 Claims**

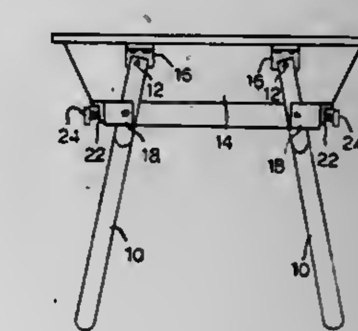

1. An oven or table having relatively deep side walls extending down a substantial distance from an upper edge to a lower surface in combination with an easily foldaway stand comprising at least one pair of legs, means pivotally connecting each of said legs at its upper end to opposite sides of said oven or table adjacent said upper edge whereby said legs may be optionally extended to supporting position or folded to storage position, a horizontally extending bar disposed intermediate opposite ends of each of said legs at a substantial distance down from said upper ends of said legs and secured thereto, said bar being in substantial abutment with said lower surface when said legs are extended, latch means provided at one end of said oven or table for cooperation with said bar to secure said bar to said surface and said pair of legs in upright condition and to impart a significant measure of stability to said legs.

4,297,954
APPARATUS FOR ATTACHING SLIDE FASTENER ELEMENTS TO FABRIC
Henry J. Gauthier, Naugatuck, Conn., assignor to Scovill Inc., Waterbury, Conn.
Continuation of Ser. No. 43,443, May 29, 1979, abandoned. This application May 9, 1980, Ser. No. 148,582
Int. Cl.³ D05B *3/12*
U.S. Cl. 112—104 **14 Claims**

1. An apparatus for sewing a ladder of slide fastener elements directly to the fabric of a garment or the like, the ladder comprising plastic U-shaped fastener elements each comprising a pair of legs and a central bight, the elements being connected and held in spaced relation by a plurality of connecting

cords at least one of which is embedded in each of the legs of the successive elements, the apparatus comprising:

(a) a sewing machine having a vertically reciprocating needle adapted to engage work at a sewing station and a work-supporting platform above which a needle reciprocates;

(b) a pressing foot adapted to guide and present the fabric and the ladder in the desired relation to the needle at the sewing station;

(c) a feed blade and cutter blade assembly including a feed blade and a cutter blade, a base member and means attaching the cutter blade rigidly thereto adjacent the pressing foot and means attaching the feed blade resiliently to the base member and generally aligned with and parallel to the cutter blade;

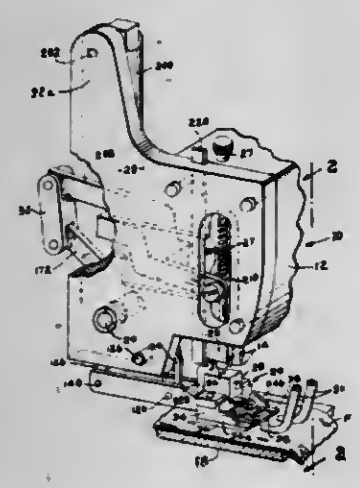

(d) drive means for driving the feed blade and cutter blade and a portion of the base member thereadjacent in an up-and-down and back-and-forth rectangular pattern of motion so that the feed blade engages successive fastener elements and moves the ladder step-by-step fashion to the sewing station; and

(e) means for momentarily restricting the back-and-forth movement of the base member thereby terminating the feed, and for depressing the base member adjacent the blades below the usual lower limit of up-and-down travel so that the feed blade yields as its engages the connecting cords but the cutter blade moves downward and severs the connecting cords.

4,297,955
SEWING APPARATUS
Edward W. Shaw, 11735 Joseph Casavant, Montreal, Quebec, Canada (H3M 2B9)
Filed Sep. 10, 1979, Ser. No. 73,608
Claims priority, application United Kingdom, Nov. 18, 1978, 45156/78
Int. Cl.³ D05B *21/00*
U.S. Cl. 112—121.15 **15 Claims**

1. An apparatus for use in substantially automatically sewing articles along a symmetrical, open-ended path comprising means for mounting each article on a support, and means for

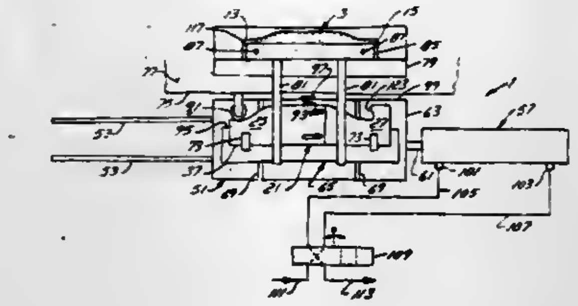

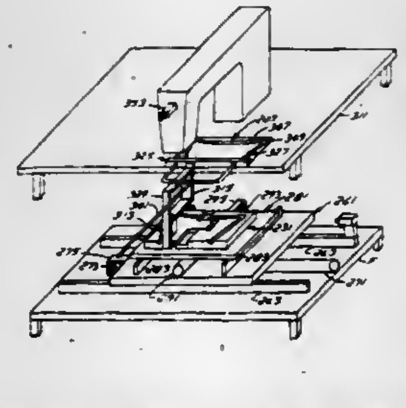

automatically moving the support to sew along the path from either end of the path to the other end.

4,297,956
ZIGZAG SEWING MACHINE HAVING BASE-MOUNTED OPERATING ELEMENTS FOR CONTROLLING SEWING
Willi Meier, Karlsruhe-Durlach, Fed. Rep. of Germany, assignor to Dorina Nähmaschinen GmbH, Fed. Rep. of Germany
Filed Sep. 10, 1979, Ser. No. 73,635
Claims priority, application Fed. Rep. of Germany, Sep. 14, 1978, 2839963; Sep. 15, 1978, 2840209
Int. Cl.³ D05B *3/02*
U.S. Cl. 112—158 A **8 Claims**

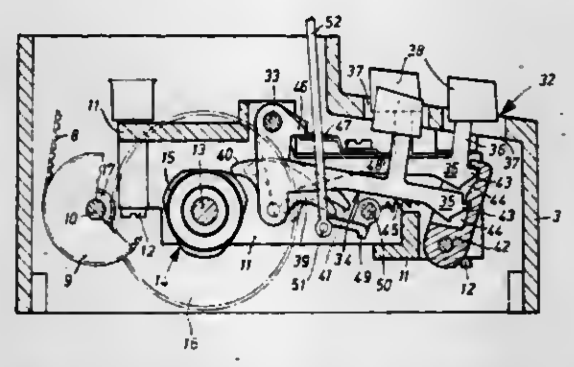

1. In a zigzag sewing machine with a multiplicity of scannable control cams which singly or severally together are connectable to transmission elements for adjusting the overstitch width or swing of the needle bar and/or of the feed direction of the fabric feed mechanism by means of a selector containing operating elements which are connected to the control cams and the transmission elements, the improvement comprising, a base portion, bracket means in said base portion mounting said control cams and said selector, said base portion having a wall with a plurality of openings therethrough, and operating elements pivotally mounted in said base portion and having a key part extending through the opening for manipulation to vary the stitch pattern, said wall also having an opening for the selector to pass through so that it may be adjusted manually.

4,297,957
ANTI-HALOING THROAT PLATE
Stanley J. Ketterer, Jamesburg, N.J., assignor to The Singer Company, Stamford, Conn.
Division of Ser. No. 940,935, Sep. 11, 1978, Pat. No. 4,266,494. This application Oct. 17, 1979, Ser. No. 85,458
Int. Cl.³ D05B *57/08, 73/12*
U.S. Cl. 112—184 **3 Claims**

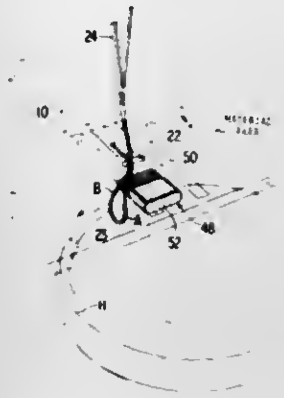

1. In a sewing machine having a bed, a reciprocatory thread carrying needle and a loop taker located in the bed of said sewing machine for grasping and expanding a loop of thread forming a work limb and a take-up limb as said needle penetrates the material being sewn, an anti-haloing device comprising a throat plate having an aperture formed therein through which said needle traverses, and means on said throat plate for separating said work limb from said take-up limb of said loop of thread and for positively restraining said work limb thereby preventing said work limb from being prematurely drawn through the material being sewn due to friction with said take-up limb, wherein said means comprises a plurality of closely spaced bristles lying parallel to said throat plate and in advance of said needle aperture, said bristles being in such a position as when said loop taker captures and expands said loop of thread, the work limb thereof will be ensnared in said bristles, and will be frictionally retained during cast-off of said loop of said loop taker until the take-up limb is drawn through said aperture through which said needle traverses.

4,297,958
HOOK DRIVE TRAIN FOR A SEWING MACHINE
Kenneth D. Adams, Madison, N.J., assignor to The Singer Company, Stamford, Conn.
Filed Oct. 31, 1979, Ser. No. 89,800
Int. Cl.³ D05B *57/36*
U.S. Cl. 112—220 **8 Claims**

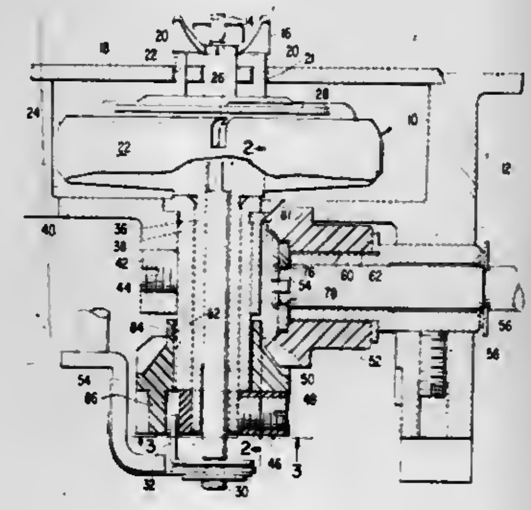

1. In a drive train for the hook of a sewing machine; and input shaft including a slot which extends diametrically across an end surface of the shaft; an input gear with diametrically opposite slots; a drive key between the input shaft and input gear including a torque transmitting member which is slidable in the shaft slot and permits self adjusting movements of the gear in the direction of such slot, said drive key also including projecting ears which extend in a direction substantially perpendicular to the torque transmitting member and register in the gear slots to provide for self adjusting movements of the gear in a direction perpendicular to the shaft slot; a bushing; a hook drive gear in mesh with the input gear and rotatable on the bushing by said input gear; a drive collar rotatable by the hook drive gear, the collar being connected to the hook drive gear to permit self adjusting movement of the hook drive gear transversely on the bushing; a hook drive shaft rotatable by the collar; and a hook rotatable by the hook drive shaft.

4,297,959
METHOD FOR MAKING CHAIN BRACKET WITH STRENGTHENED CHAIN SUPPORTS
Charles C. Frost, Ada, and Siegfried K. Weis, Byron Center, both of Mich., assignors to C. L. Frost & Son, Inc., Grand Rapids, Mich.
Division of Ser. No. 872,244, Jan. 25, 1978, Pat. No. 4,220,243. This application Jan. 7, 1980, Ser. No. 110,258
Int. Cl.³ B21D *53/00*
U.S. Cl. 113—116 HH **13 Claims**

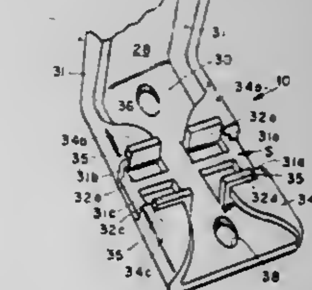

1. A method for forming stamped trolley brackets for use with overhead conveyors comprising the steps of:

(1) stamping a trolley bracket from a sheet of metal including forming one end of said bracket for supporting a trolley wheel, a second end portion for supporting a chain link of a conveyor chain, and an intermediate portion connecting said two end portions;

(2) said forming of said second end portion including bending integrally and in one piece from a portion of the sheet metal of said bracket at least one of a chain pad for supporting a conveyor chain link when mounted thereon and reinforcing means for said chain pad;

(3) bending the other of said chain pad and reinforcing means from said bracket sheet metal such that said reinforcing means will support said chain pad in use and resist bending or deformation from its position when loaded; and

(4) said bending including bending said chain pad from a portion of said sheet metal separate from the portion from which said reinforcing means is bent; said separate chain pad and reinforcing means being bent such that they extend in different planes but engage and abut another after bending whereby said second bracket end portion is ready for receipt of and engagement with a link of a conveyor chain after bending.

4,297,960
TANK WITH A DOME ONBOARD SHIPS
Arne Tonnessen, Jeloy, Norway, assignor to Moss Rosenberg Verft A.S., Jeloy, Norway
Continuation-in-part of Ser. No. 831,917, Sep. 9, 1977, abandoned, which is a continuation of Ser. No. 687,935, May 19, 1976, abandoned. This application Jun. 7, 1979, Ser. No. 46,428
Claims priority, application Norway, Jun. 5, 1975, 751986
Int. Cl.³ B63B *25/08;* B65D *88/04, 88/12*
U.S. Cl. 114—74 A 3 Claims

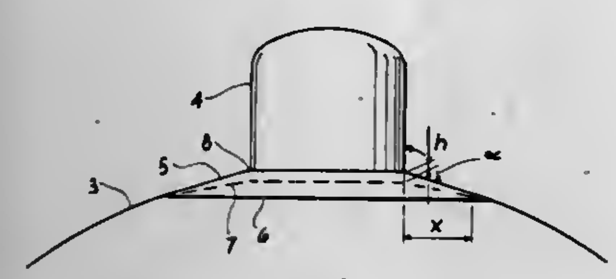

1. A closed tank means for transporting liquefied gases on board a marine vessel comprising a spherical tank shell, a frusto-conical transition wall and a dome which has an annular bottom edge portion, said tank shell and said transition wall and said dome all having a common vertical axis, said tank shell being truncated by a horizontal plane across the upper part of the top hemisphere of said tank shell, the portion of the sphere of said tank shell above said horizontal plane comprising a hypothetical extension of said tank shell from said horizontal plane to a height where its diameter is equal to the diameter of said annular bottom edge portion of said dome, said dome being for containing operating equipment for the tank, said frusto-conical transition wall being for securing said dome to said tank shell at said horizontal plane and defining means for increasing the natural frequency of said dome and thereby reducing vibration of said dome, said frusto-conical transition wall being substantially tangential to the upper portion of said tank shell at said horizontal plane, said annular bottom edge portion of said dome being coextensive with the upper edge portion of said frusto-conical transition wall and being attached thereto throughout their respective diameters at a height above that of the top of said hypothetical extension of said sphere, the longitudinal, axial length of said frusto-conical transition wall being substantially less than the longitudinal, axial length of said dome, whereby said frusto-conical transition wall stiffens said dome relative to said tank wall and thereby increases the natural frequency of vibration of said dome to a level above the frequencies of vibration to which said dome would otherwise be subjected while the vessel is at sea.

4,297,961
OUTRIGGER-STABILIZED FLOATING CRANE SYSTEM
Fontain M. Johnson, Jr., St. Louis County, Mo., assignor to Weaver Shipyard and Drydock, Inc., Orange, Tex.
Filed Dec. 31, 1979, Ser. No. 108,514
Int. Cl.³ B63B *43/14;* B66C *23/52*
U.S. Cl. 114—123 22 Claims

1. A floating crane construction comprising
a crane barge having a crane mounting provision on its upper side, substantially on its longitudinal centerline, in combination with
a pair of outrigger barges, and
outrigger mounting structures, one extending sideward from each side of the crane barge to one of said outrigger barges, each outrigger mounting structure including
connection means for coupling each of the said outrigger mounting structures to an outrigger barge, and
a moment-resisting connection to the crane barge,
whereby listing on increased loading of the crane barge creates a substantially vertical-acting force at the connection means which is resisted by the buoyancy of the outrigger barge,
at least one of said connection means and said moment-resisting connection having a removable pin connector, together with
means to so ballast the outrigger barges that upon normal

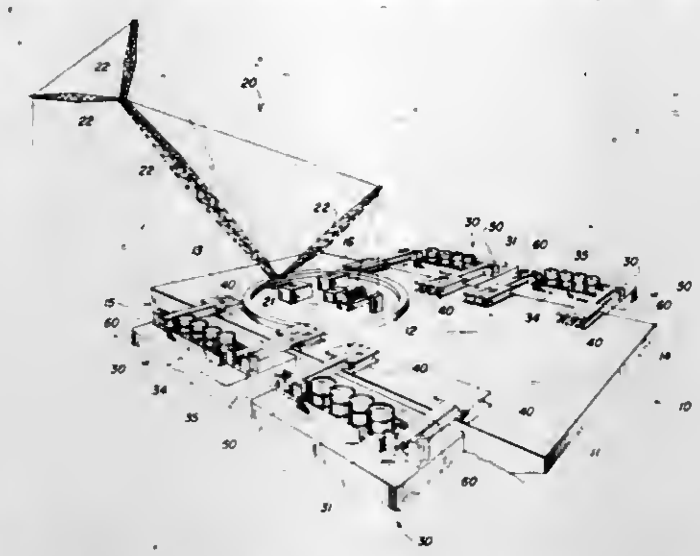

loading of the crane barge with a substantially unloaded crane mounted on said crane mounting provision, the draft of both outrigger barges is such as to create substantially no vertical-acting forces at the removable pin connectors,
whereby to facilitate coupling and uncoupling of the outrigger barges.

4,297,962
HINGED DECK CLEAT ASSEMBLY
Curtiss S. Johnson, Jr., Middle Haddam, Conn., assignor to C. Sherman Johnson Company, Inc., East Haddam, Conn.
Filed Jul. 3, 1979, Ser. No. 54,473
Int. Cl.³ B63B *21/04*
U.S. Cl. 114—218 9 Claims

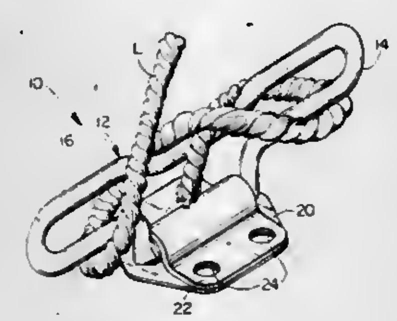

1. A hinged cleat assembly for the deck of a boat or the like comprising:
a base plate mountable on the deck surface of a boat;
a cleat member formed by a rod contoured in the shape of a "T" with two opposed projecting ears extending in opposite directions away from a supporting stem intermediate the ears, the ears being interconnected in the intermediate region and each ear having the shape of an elongated "U" to define a central opening extending into the ear from the intermediate region and to attach to the cleat member a line in a conventional hitch, the ears being contoured at their interconnection in the intermediate region of the cleat member to form an outwardly facing depression on the exterior of the cleat member; and
hinge means connecting the stem of the cleat member to the base plate for pivoting movement of the cleat member between an upright and a flattened position relative to the base plate.

4,297,963
MOORING DEVICE
Keith I. Beacom, P.O. Box 178, Huntsville, Ontario, Canada (P0A 1K0)
Filed Mar. 2, 1979, Ser. No. 16,800
Int. Cl.³ B63B *21/00*
U.S. Cl. 114—230 8 Claims

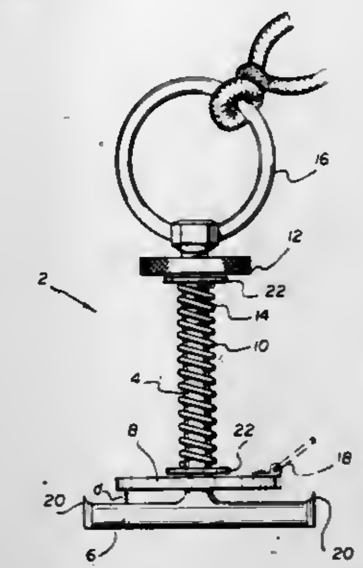

1. A securing device for a dock or the like having spaced decking elements of uniform thickness comprising:
a body of uniform cross-section in rigid T-bar form, having a shaft and an elongated head secured transversely to one end thereof, the head being sufficiently narrow to fit between adjacent elements;
a flat plate mounted on the shaft for slideable movement thereon toward and away from the head;
biasing means associated with the shaft and plate to urge the plate toward the head; and
means for securing a line.

4,297,964
MOBILE CAISSON STRUCTURE
Said Oleborg, Onsala, Sweden, assignor to Navire Cargo Gear International AB, Göteborg, Sweden
Filed Apr. 3, 1980, Ser. No. 136,902
Claims priority, application Sweden, Apr. 18, 1979, 7903371
Int. Cl.³ B63B *21/00*
U.S. Cl. 114—263 3 Claims

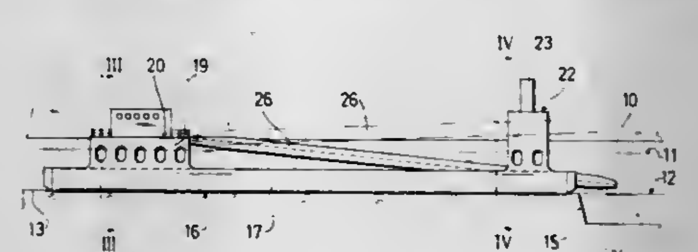

1. A mobile caisson structure comprising
at least one elongate displacement unit having ballast tanks,
a first housing at one end of said displacement units, said housing having sufficient height to extend above high water level at the location where the caisson is expected to be used with its displacement unit resting upon the sea bottom, said housing having a platform located above said high water level,
a second housing comprising two towers at the opposite end of said displacement unit,
a communication ramp having one end supported by the platform of said first housing, and extending at least to said second housing, and
means at said second housing for raising and lowering the adjacent end of said communication ramp.

4,297,965
TENSION LEG STRUCTURE FOR TENSION LEG PLATFORM
Edward E. Horton, Portuguese Bend, and Raymond W. Walker, Huntington Beach, both of Calif., assignors to Deep Oil Technology, Inc., Irvine, Calif.
Filed Sep. 6, 1979, Ser. No. 73,096
Int. Cl.³ B63B *35/44*
U.S. Cl. 114—265 8 Claims

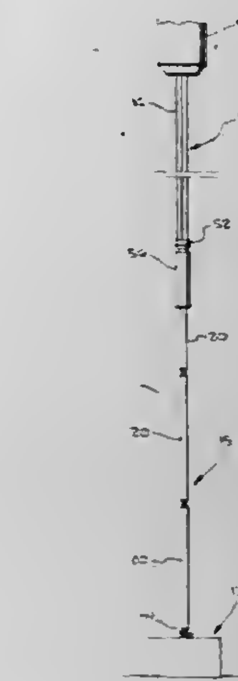

1. In combination:
a floatable offshore platform;
a plurality of anchor means adapted to be set on the ocean floor;
a plurality of tension leg means extending between and connected to the platform and to respective anchor means;
each tension leg means including a tension leg structure and tension lines, each leg structure comprising:
a plurality of interconnected independently buoyant members having a buoyancy to provide an essentially free-standing structure;
each buoyant member including a hollow cylindrical member,
a fluid tight bulkhead adjacent each end of said cylindrical member to form a closed buoyant compartment,
and a tremie pipe member within said cylindrical member and extending through said bulkheads in sealed relation therewith and having pipe extensions beyond said bulkheads;
joint means threadedly interconnecting adjacent independently buoyant members in tension force transmitting relation;
the adjacent pipe extensions of said tremie pipe members having a coupling providing fluid communication therebetween within said joint means;
a buoyant cylinder means carried by each of the uppermost of said independently buoyant members to provide additional positive buoyancy to support said plurality of buoyant members in such freestanding relation;
a crosshead means carried by said uppermost buoyant member;
said tension lines having lower ends positionable and connectible in force transmitting relation with said crosshead means and adapted to extend to said platform;
said tension lines in non-force transmitting relation being supported by said buoyant members and cylinder means and lying alongside said buoyant members.

4,297,966
VALVE INDICATOR POST
Richard Liberman, 4400 Montclair Ave., Montreal, Quebec, Canada
Filed Oct. 15, 1979, Ser. No. 85,141
Claims priority, application Canada, Oct. 18, 1978, 313675
Int. Cl.³ F16K *37/00*
U.S. Cl. 116—277 **7 Claims**

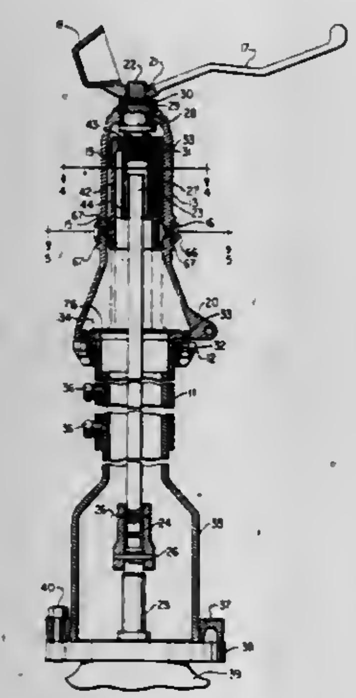

1. An indicator post for operating a valve stem of a remote valve and for indicating the position of the valve, said post comprising:
a cylindrical outer casing having a detachable cap, the cap having at least two curved viewing ports extending in a single curve therearound and having an upper surface;
a rotatable stem adapter positioned through the upper surface;
an operating member in the cap connected to said stem adapter for rotation therewith;
a stem member in the casing linking for rotation said operating member to the valve stem;
a curved target carrier located in the cap, said carrier adapted to move axially within the cap in response to rotation of said operating member, said carrier having an outer surface;
a first and a second target strip, each strip having a valve position indication thereon with the indication on said first strip different from the indication on said second strip, said first and second strips removably wrapped about the outer surface;
fastening means for mounting said first and second strips in any vertical position along the axial length of the outer surface with said second strip at a location on the outer surface different from the location of said first strip; and,
means for axially moving said carrier and said first and second strips past the viewing ports as said stem adapter is rotated, with said means threadably engaging said carrier to said operating member
whereby when either said first or said second strip is in alignment with said ports the valve position indication thereon is visible for almost 360° around said post.

4,297,967
DEVICE FOR APPLYING AN OPERATING PRESSURE TO A ROLLER
Francesco Osta, 3, via Spanzotto, I-15033 Casale Monferrato, Italy
Filed Jan. 15, 1980, Ser. No. 112,320
Claims priority, application Italy, Feb. 2, 1979, 67228 A/79
Int. Cl.³ B05C *11/02*
U.S. Cl. 118—117 **10 Claims**

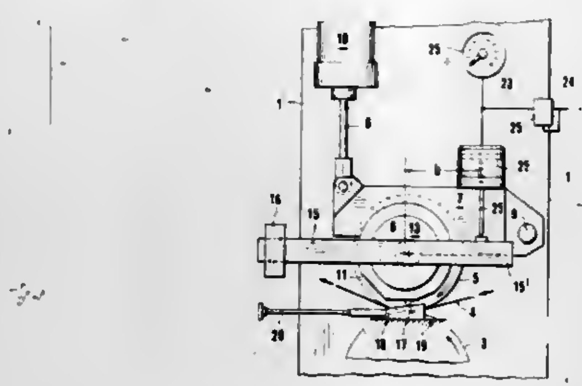

9. A spreading unit, comprising a structure, a spreading roller pivoted on said structure, motor means connected to said spreading roller, support levers pivoted on said structure, drive means connected to said support levers and structure for displacing said support levers, stop means on said structure for determining an operating position of said support levers, support bushings rotatably mounted on said support levers, bearings eccentrically mounted on said bushings, a pressure roller pivoted in said bearings and cooperating as a counterroller with said spreading roller, bars connected to said bushings and means for applying an operating pressure, connected to said bars.

4,297,968
DEVICE FOR SPREADING PASTE ON PAPERBOARD IN A CORRUGATED BOARD MANUFACTURING APPARATUS
Eiichi Isowa, Nagoya, Japan, assignor to Isowa Industry Co., Ltd., Japan
Filed Jan. 31, 1980, Ser. No. 117,074
Int. Cl.³ B05C *1/08, 1/16*
U.S. Cl. 118—249 **9 Claims**

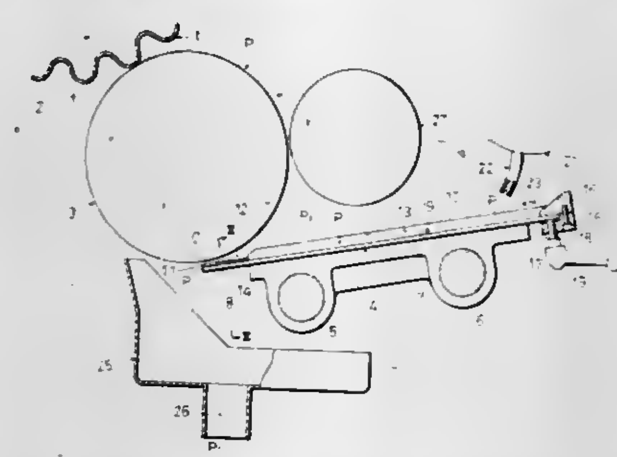

1. In a corrugated board manufacturing apparatus, a device for spreading paste on tops of corrugated core paper to be pasted with linerboard, said device comprising:
a supplier for supplying liquid paste;
a roller spaced from said supplier to face said tops of said core paper for spreading said liquid paste thereon;
means provided opposite to said paste spreading roller for controlling the volume of said liquid paste;
paste means provided under said supplier downwardly inclining toward said paste spreading roller and having a forward end in proximity with said paste spreading roller to define a passage for continuously flowing said liquid paste supplied from said supplier past said paste spreading roller;
said paste feeding means comprising:
at least a pair of end plates oppositely provided in the forward end of and on top of said paste feeding means defining a certain clearance between the upper surfaces thereof and said paste spreading roller, said end plates being longitudinally movable with respect to the roll axis of said paste spreading roller; and whereby
a feed portion is defined by said end plates and communicates with said passage in which said paste spreading roller dips up paste, the width of said feed portion being adjustable by movement of said end plates in conformity with the width of said core paper between a minimum effective width and a maximum effective width.

4,297,969
MAGNETIC POWDER TRANSPORTING DEVICE
Akiyoshi Torigai, Machida, Japan, assignor to Canon Kabushiki Kaisha, Tokyo, Japan
Filed Oct. 30, 1979, Ser. No. 89,369
Claims priority, application Japan, Nov. 10, 1978, 53-137834
Int. Cl.³ G03G *15/06*
U.S. Cl. 118—652 **14 Claims**

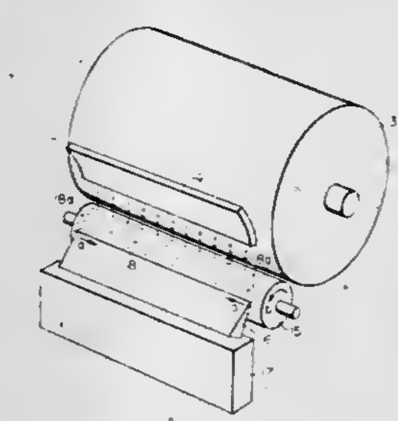

1. A transporting device for transporting magnetic powder with magnetic force, comprising:
transport means provided with a magnet having principal magnetic poles for transporting the magnetic powder; and
drive means for driving said transport means, wherein said magnet has magnetic field generating portions provided at the end portions thereof for displacing the magnetic powder toward the internal portions of the magnet by magnetic force, said magnetic field generating portions being composed of a part of each of said principal magnetic poles, and wherein each said part is inclined with respect to the remaining part of each of said principal magnetic poles.

4,297,970
DEVELOPING APPARATUS
Hatsuo Tajima, Matsudo; Nagao Hosono, Chofu, and Junichiro Kanbe, Tokyo, all of Japan, assignors to Canon Kabushiki Kaisha, Tokyo, Japan
Filed Mar. 3, 1980, Ser. No. 126,865
Claims priority, application Japan, Mar. 9, 1979, 54-27327
Int. Cl.³ G03G *15/06, 15/09*
U.S. Cl. 118—652 **14 Claims**

1. A developing apparatus for developing an electrostatic latent image formed on an electrostatic image bearing means, by providing said latent image with a developer, said apparatus comprising:
a movable toner bearing member for carrying thereon a magnetic toner;
toner supply means for supplying magnetic toner to said toner bearing member;
magnetic field generating means fixedly provided inside said toner bearing member; and
a toner thickness limiting member comprising a magnetic material positioned within the extent of a magnetic field generated by a magnetic pole of said magnetic field generating means and in the vicinity of the external periphery of said toner bearing member;

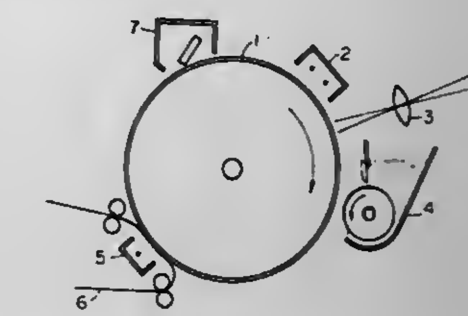

wherein said magnetic toner is provided with a mean particle size in a range of 5 to 30 microns and contains magnetic powder in a range of 15 to 50 wt.%, and wherein the magnetic pole of said magnetic field generating means is so selected as to maintain a magnetic field of at least 1350 gauss in average between said toner thickness limiting member and said toner bearing member thereby forming the toner layer of a determined thickness on said toner bearing member.

4,297,971
APPARATUS FOR VAPORIZING SOLID COATING REACTANTS
Vern A. Henery, Plum Borough, Pa., assignor to PPG Industries, Inc., Pittsburgh, Pa.
Division of Ser. No. 836,177, Sep. 23, 1977, Pat. No. 4,182,783. This application Sep. 12, 1979, Ser. No. 74,582
Int. Cl.³ C23C *11/00, 13/12*
U.S. Cl. 118—719 **7 Claims**

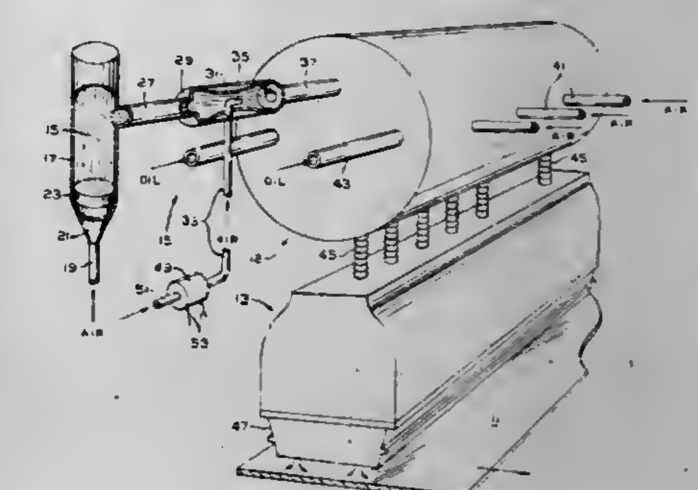

1. In an apparatus for coating a substrate with a film by deposition from a vaporous reactant composition comprising means for vaporizing a particulate solid coating reactant by directing a hot gas over the reactant and means for directing the reactant-gas composition into contact with the substrate to be coated, which substrate is maintained at a sufficient temperature for causing the reactant to react at the substrate surface to form a film thereon, the improvement which comprises
means for fluidizing a mass of particulate solid reactant by introducing a volume of fluidizing gas through such a mass;
means for drawing a volume of fluidized particulate solid reactant and fluidizing gas through an enclosure and for heating an additional volume of gas and mixing the additional volume of gas therewith; and
means for heating the mixture to a sufficient temperature to

vaporize the fluidized particulate solid reactant to provide the reactant-gas composition.

4,297,972
DEVELOPMENT SYSTEM
Stephen C. P. Hwa, Penfield, N.Y., assignor to Xerox Corporation, Stamford, Conn.
Filed Nov. 5, 1979, Ser. No. 91,296
Int. Cl.³ G03G *15/09*
U.S. Cl. 118—658 **8 Claims**

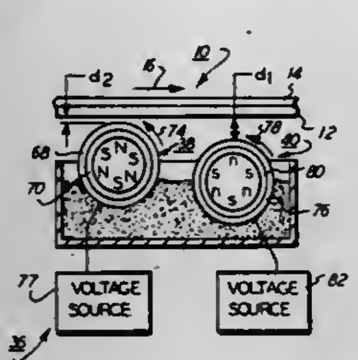

1. An apparatus for developing a latent image, including:
means for transporting a conductive developer material comprising a ferromagnetic carrier material and marking particles into contact with the latent image at least two successive times,
means for generating a first magnetic field for attracting the carrier material to maintain the developer material at a first conductivity to optimize development of solid areas with the marking particles the first contact time, and
means for generating a second magnetic field for attracting the carrier material to maintain the developer material at a second conductivity lower than the first conductivity to optimize development of lines with the marking particles the last contact time.

4,297,973
PROCESS AND APPARATUS FOR INCREASING THE UTILIZATION OF FISH FEED IN FISH FARMING PONDS AND THE LIKE
Albert H. Knowles, Inverness, Scotland, assignor to K. R. Associates Inc., Concord, New Hampshire
Filed Apr. 21, 1980, Ser. No. 141,771
Int. Cl.³ A01K *61/02, 63/00*
U.S. Cl. 119—3 **30 Claims**

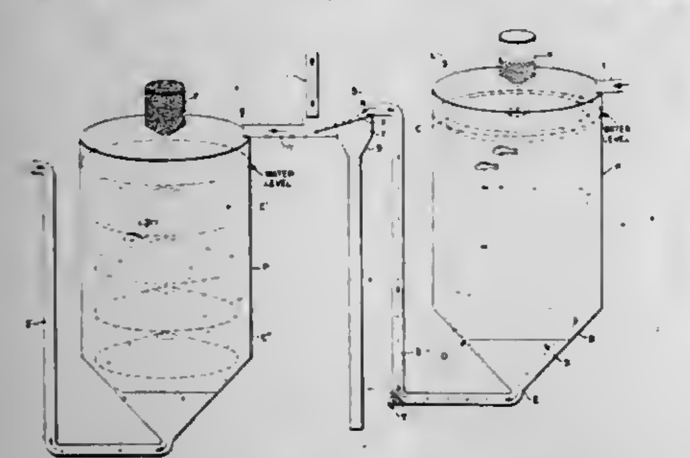

1. A process for increasing the utilization of fish feed, that comprises, separately applying inlet water to a plurality of successive fish ponds; introducing fish feed into at least one of said ponds and circulating the same about the pond as the feed drops under gravity toward the bottom of said pond; carrying uneaten feed at the said bottom of the pond upward with the pond waste water towards the top of an adjacent pond while retaining the fish in the pond; ejecting the waste water while screening therefrom the carried uneaten feed; and imparting momentum to such feed to carry the same into the said adjacent pond to be circulated about said adjacent pond by the inlet water applied thereto.

4,297,974
AUTOMATIC FEEDING APPARATUS
Gerardus W. Poiesz, Warnsveld, Netherlands, assignor to Brinkmann En Niemeyer N.V., Zutphen, Netherlands
Filed Jan. 30, 1980, Ser. No. 116,991
Claims priority, application Netherlands, Feb. 1, 1979, 7900834
Int. Cl.³ A01K *5/02*
U.S. Cl. 119—51 R **6 Claims**

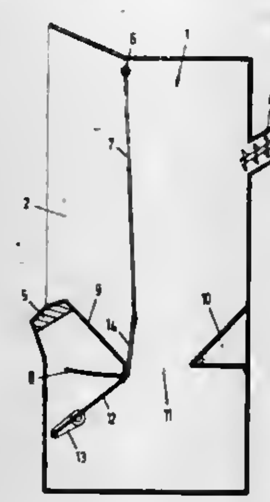

1. Livestock feeding apparatus of the type having:
(a) a housing having a head insertion opening; and
(b) dosing means responsive to the presence of selected specimens of the livestock for presenting food within said housing so that the food so presented is accessible through said opening, wherein the improvement comprises:
(c) a valve mounted adjacent said head insertion opening for movement relative to said housing between an open position in which said valve does not occlude said opening and a closed position in which said valve occludes said opening;
(d) valve opening means responsive to the presence of said selected specimens of the livestock for moving said valve from said closed position to said open position; and
(e) valve closing means for returning said valve from said open position to said closed position when a predetermined period of time has elapsed after movement of said valve to said open position.

4,297,975
DEVICE FOR IMPROVING THE LUBRICATION IN A ROTARY COUPLING
Ercole Galli, Turin, Italy, assignor to Mondial Piston - Dott. Galli Ercole & C. S.p.A., Turin, Italy
Filed Jan. 16, 1979, Ser. No. 3,952
Claims priority, application Italy, Jun. 14, 1978, 68373 A/78
Int. Cl.³ F02F *3/00*
U.S. Cl. 123—193 P **4 Claims**

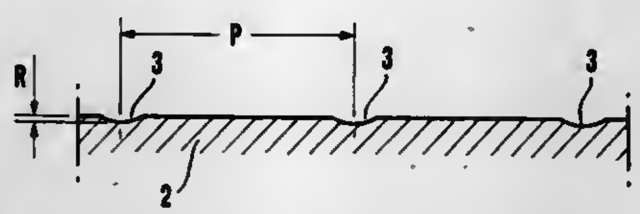

1. In a piston for an internal combustion engine, having bosses and in said bosses holes intended to receive a piston pin, of the type in which the piston pin is lubricated only by sprayed lubricating oil reaching the piston pin surface by passing between the piston bosses and a connecting rod and then penetrating between the piston and the piston pin; the improvement that at least a portion of the concave surface of said holes has hollowed therein a number of turns of circumferential grooving having a depth ranging between 2 μm and 50 μm, whereby a capillary channel for lubricating oil is formed.

4,297,976
PISTON AND CYLINDER ASSEMBLIES
Ludovico Bruni, and Pierantonio Iguera, both of Turin, Italy, assignors to Associated Engineering, Italy, S.p.A., Turin, Italy
Filed May 31, 1979, Ser. No. 44,074
Claims priority, application United Kingdom, May 31, 1978, 25336/78
Int. Cl.³ F02F *1/00*
U.S. Cl. 123—193 CP **11 Claims**

1. A piston and cylinder assembly in which the piston is made of an aluminium alloy characterised in that after any temporary running-in coating on the wall of the cylinder has been worn away, the piston is in direct running contact with a cylinder wall formed of a hypereutectic silicon aluminium alloy consisting essentially of the following in percentages by weight:
silicon 12-20%; copper 0.5-5%; iron 1.0-6%; magnesium 0.2-2%; nickel 0.5-4%; and optionally manganese 0-5%, cobalt 0-3%; chromium 0-3%; tin 0-8%; titanium 0-0.3%; lead 0-5%; and molybdenum 0-5%, the remainder being aluminium.

4,297,977
IGNITION SYSTEM FOR AN INTERNAL COMBUSTION ENGINE
Kimihiro Boyama, Shizuoka, Japan, assignor to Kokusan Denki Co., Ltd., Numazu, Japan
Filed Jan. 18, 1980, Ser. No. 113,355
Claims priority, application Japan, Jan. 19, 1979, 54-5500[U]
Int. Cl.³ F02B *31/00*
U.S. Cl. 123—320 **4 Claims**

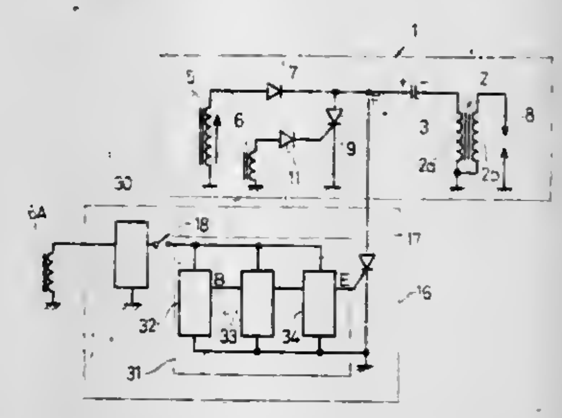

1. An ignition system for an internal combustion engine having a throttle valve operated by a throttle valve operating member, the ignition system comprising an ignition circuit to generate a spark at an ignition plug in synchronism with the rotation of the internal combustion engine, said ignition system further comprising an ignition preventing circuit to prevent said ignition circuit from being operated when the internal combustion engine is being rotated at a speed of revolution higher than a first set value of revolutions per minute while said throttle valve operating member is returned to a position at which the internal combustion engine is to be rotated at a speed of revolution lower than a second set value of revolutions per minute which is lower than said first set value of revolutions per minute, said ignition preventing circuit comprising an ignition preventing semiconductor switch provided in said ignition circuit to prevent said ignition circuit from being operated when said ignition preventing semiconductor switch is operated, and a control signal generator provided to supply a control signal to said ignition preventing semiconductor switch at a given period when the internal combustion engine is being rotated at a speed of revolution higher than said first set value while said throttle valve operating member is returned to said position corresponding to a speed of revolution lower than said second set value, said ignition preventing circuit further comprising a throttle position detecting switch to detect the position of said throttle valve operating member, said control signal generator comprising an electric source to generate an output voltage increasing with the revolutions per minute of the engine and to rectify said output voltage into a DC voltage, a pulse generating circuit to receive said DC voltage to generate a pulse signal having a constant period, and said pulse generating circuit being connected to said ignition preventing semiconductor switch to apply said pulse signal as said control signal to said ignition preventing semiconductor switch.

4,297,978
IDLING ROTATIONAL SPEED CONTROL SYSTEM FOR A DIESEL ENGINE
Katsuhiko Matsui, Yokohama, Japan, assignor to Nissan Motor Company, Limited, Yokohama, Japan
Filed Dec. 26, 1979, Ser. No. 107,458
Claims priority, application Japan, Jan. 18, 1979, 54-3359
Int. Cl.³ F02M *51/06*
U.S. Cl. 123—339 **18 Claims**

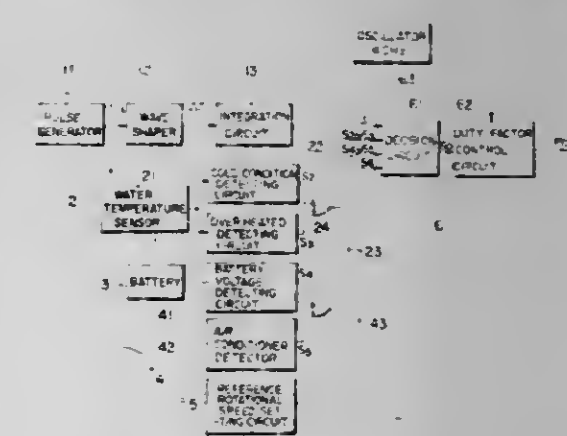

1. An idling speed control system for a diesel engine comprising:
(a) an engine speed sensor for determining engine speed and producing a first sensor signal indicating the determined engine speed;
(b) an engine temperature sensor for determining engine temperature and producing a second sensor signal when the determined engine temperature is not in a predetermined temperature range;
(c) a battery voltage sensor determining battery voltage and producing a third sensor signal when the battery voltage drops below a predetermined level;
(d) a target engine speed determining means for determining a target engine speed and producing a reference signal indicative of the determined target engine speed;
(e) an engine speed setting circuit setting the engine speed to a predetermined speed and producing a fourth signal representative of the set speed, which, when the value of said first sensor signal is less than that of said reference signal, is set to step up the engine speed so that the engine speed becomes equal to the target engine speed, and when the engine is idling and at least one of said second and third sensor signals is inputted, said engine speed setting circuit sets the engine speed to another and increased predetermined speed to step up the engine speed so that the engine speed is accelerated to said another predetermined speed;
(f) a control means responsive to said fourth signal and controlling the amount of the fuel supplied to the engine.

4,297,979
SPLIT CONTROL RACK
Ewald Kamleitner, Friedrichshafen, Fed. Rep. of Germany, assignor to Motoren- und Turbinen-Union Friedrichshafen GmbH, Friedrichshafen, Fed. Rep. of Germany
Filed May 14, 1979, Ser. No. 38,713
Claims priority, application Fed. Rep. of Germany, May 13, 1978, 2821161
Int. Cl.³ F02D *17/00*
U.S. Cl. 123—372 **7 Claims**

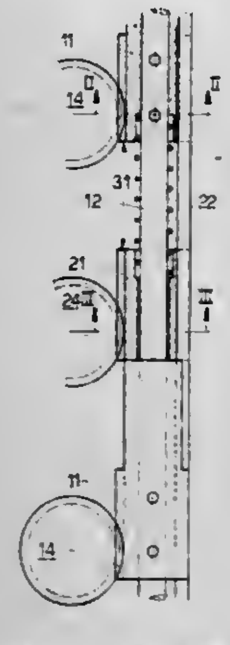

1. A split control rack for controlling an operation of a series of fuel injection pump means which are respectively associated with cylinders of an internal combustion engine, the split control rack including a first control rack section associated with a first group of cylinders and a second control rack section associated with a second group of cylinders, the split control rack being displaceably actuated by a control member such that the fuel is supplied to the first group of cylinders in dependence upon a displacement of the first control rack section and fuel is supplied to the second group of cylinders in dependence upon a displacement of the second control section rack, characterized in that each of the two control rack sections includes a plurality of individual cylindrical segments each being respectively associated with one of the fuel injection pump means, each of the individual segments is provided with one of serrations and guide levers for actuating the respective fuel pump means associated with the individual segments a first rod is provided for connecting each of the individual sections of the first control rack section together, means are provided in each of the individual segments of the second control rack section for enabling a displaceable mounting of the individual segments of the second rack section on the first rod, a second rod is provided for connecting each of the individual segments of the second control rack section together, and in that recess means are provided in each of the individual segments of the second control rack section for guidingly accommodating the first rod connecting the individual segments of the first control rack section together.

4,297,980
MOTOR VEHICLE CARBURETOR CHOKE MECHANISM
Andrew G. Bellis, Plymouth Township, Wayne County, Mich., assignor to Ford Motor Company, Dearborn, Mich.
Filed Apr. 10, 1980, Ser. No. 138,955
Int. Cl.³ F02B *7/00, 75/10*
U.S. Cl. 123—438 **5 Claims**

1. A dual-stage vacuumless automatic choke mechanism for use with an engine mounted carburetor having an air/fuel induction passage and an unbalance mounted choke valve rotatably mounted for a variable movement across the passage between an open and closed position to control flow through the passage, the choke mechanism including a housing having an air inlet and outlet, a thermostatic spring means mounted in the housing and operably connected to the choke valve urging the choke valve towards a closed position with a force increasing as a function of decreases in the temperature of the spring means from a predetermined level, the one stage including an engine driven air pump providing a source of air, under pressure that varies with changes in engine speed, conduit mens connecting the air under pressure from the pump to the choke housing inlet, and engine stove means associated with the conduit means for heating the air under pressure prior to entry into the housing whereby the heat is transferred to the spring

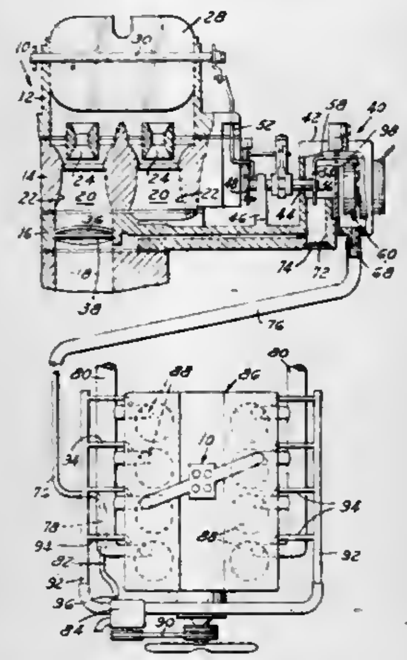

means for warming the same to reduce its choke valve closing force and permit opening of the choke valve by air flow thereagainst, the other stage comprising electrical heater mens in the housing operably associated with the spring means for transferring its heat output to the spring means independently of the one stage means to warm the spring means and reduce the choke valve closing force of the spring means, each stage being operably independently of the operability of the other stage to assure a slow movement of the choke valve to its open position without the use of vacuum from the carburetor induction passage.

4,297,981
FUEL FLOW RATE MEASURING DEVICE
Kei Kimata, Aichi; Yoshinobu Yasuda, Iwata; Isamu Yoshida, Iwata, and Masahiro Saruta, Iwata, all of Japan, assignors to NTN Toyo Bearing Company, Limited, Osaka, Japan
Division of Ser. No. 893,681, Apr. 5, 1978, Pat. No. 4,184,505. This application Aug. 17, 1979, Ser. No. 67,453
Claims priority, application Japan, Apr. 5, 1977, 52-42899[U]; May 6, 1977, 52-57857[U]; May 7, 1977, 52-57653[U]
Int. Cl.³ F02D *9/12*
U.S. Cl. 123—454 **1 Claim**

1. A fuel flow rate measuring device for use with an internal combustion engine comprising a flow rate measuring section including a body having a bore whose cross-section is not uniform in the longitudinal direction, a fuel inlet communicating with said bore and a fuel outlet communicating with said bore, and a ball placed in said bore; a control rod, the clearance between said bore and ball being adjustable in accordance with an axial movement of said control rod; a pressure regulator communicating with said fuel inlet and outlet for keeping constant the pressure difference between said inlet and outlet sides, the arrangement being such that the axial position of said control rod and the rate of flow of the fuel correspond to each other in a fixed relation; a sensor means for detecting the operating conditions of the internal combustion engine to produce a control signal in response to said operating conditions, a variable choke operatively positioned in at least one of a fuel supply channel and a fuel return channel of the internal combustion engine and connected to provide a control input to said pressure regulator; and a controller responsive to said

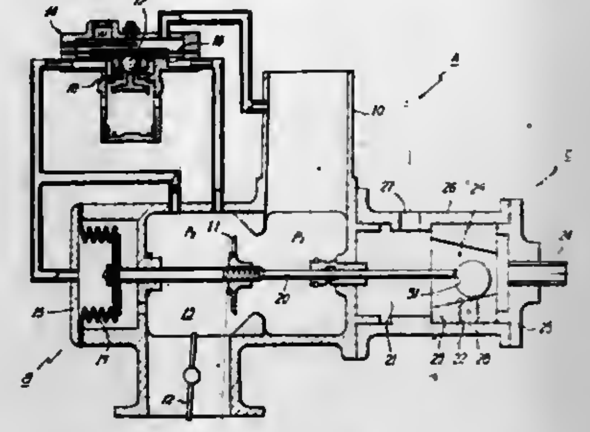

control signal for controlling the degree of opening of said variable choke to thereby provide supplementary control of said pressure regulator.

4,297,982
FUEL INJECTION PUMPING APPARATUS
Paul Lakra, Wembley, England, assignor to Lucas Industries Limited, Birmingham, England
Filed Apr. 17, 1980, Ser. No. 141,158
Int. Cl.³ F02D *1/02, 5/02*
U.S. Cl. 123—502 **9 Claims**

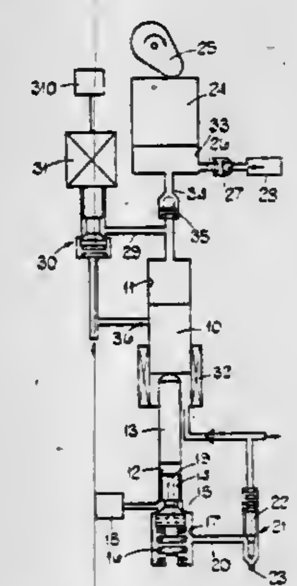

1. A fuel injection pumping apparatus for supplying fuel to an injection nozzle of an internal combustion engine comprising piston means contained within a bore, an outlet from one end of the bore, said outlet in use communicating with an inlet of the nozzle, a fuel inlet to said one end of the bore connected in use to a source of fuel under pressure, a valve operable to prevent flow of fuel through said inlet during delivery of fuel through said outlet, a reciprocable plunger contained within a cylinder, cam means for urging the plunger towards one end of the cylinder, passage means connecting said one end of the cylinder with the other end of said bore whereby liquid displaced during movement of the plunger by the cam will act on said piston means to urge the piston to displace fuel through said outlet, a non-return valve in said passage means to prevent flow of liquid from said bore to said cylinder, a solenoid controlled valve operable to allow flow of liquid from the other end of said bore, a transducer for providing a signal indicative of the position of said piston means, a control circuit for controlling the operation of said valve, said control circuit receiving the signal from the transducer, first means for providing a demand signal to said control circuit, second means for providing an engine speed signal to said control circuit, third means for providing an engine position signal to the control circuit, whereby during movement of the plunger by the cam the valve is closed at a position to cause delivery of fuel at the desired time, and whereby during filling of the bore, the valve is closed when the piston means attains a position appropriate to the amount of fuel to be delivered to the engine.

4,297,983
SPHERICAL REENTRANT CHAMBER
Michael A. V. Ward, 20 Marrett Rd., Lexington, Mass. 02173
Filed Dec. 11, 1978, Ser. No. 968,367
Int. Cl.³ F02P *1/00*
U.S. Cl. 123—536 **16 Claims**

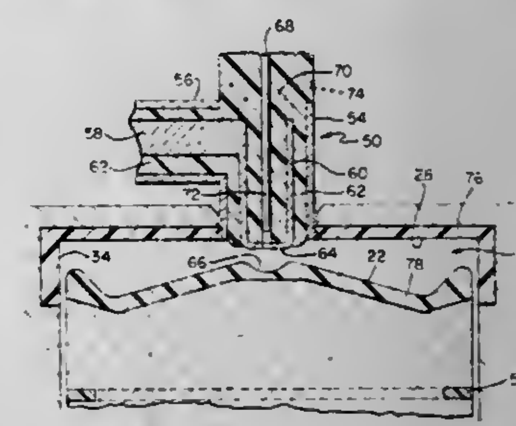

1. In a combustion system including a combustion chamber having a cylindrical configuration, including opposite end walls means for introducing a combustible mixture into said chamber, means for igniting said mixture, moveable means for compressing the mixture and means for conducting to said chamber electromagnetic energy at a microwave frequency, the improvement wherein said frequency and the configuration of said chamber are selected such that a cylindrical resonant cavity mode is substantially continuously excited in said chamber by said energy during combustion of said mixture, said mode being one wherein the electric field strength is largest in the region of the initial flame zone and falls off to lower strength in the region of fully developed flame, and one of said end walls includes a non flat surface so that the shift of the resonant frequency at which combustion occurs, with movement of the movable means, is reduced.

4,297,984
AIR-FUEL MIXTURE CONTROL VALVE ASSEMBLY
Yasuhiro Kawabata, Anjo, Japan, assignor to Aisin Seiki Kabushiki Kaisha, Kariya, Japan
Filed Oct. 9, 1979, Ser. No. 82,529
Claims priority, application Japan, Oct. 9, 1978, 53/139017[U]
Int. Cl.³ F02M *23/04*
U.S. Cl. 123—587 **5 Claims**

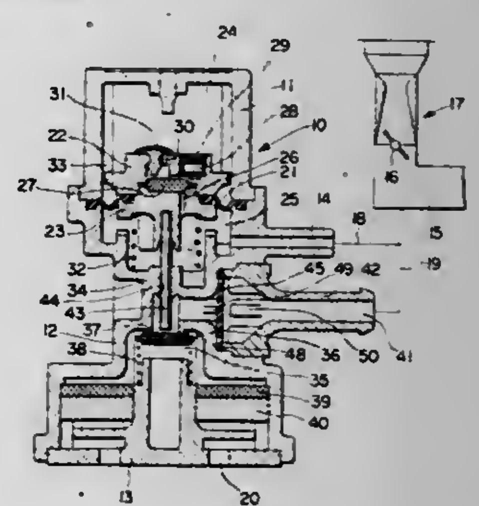

1. An air-fuel mixture control valve assembly for automotive vehicles in association with an intake manifold, comprising:

a body provided with an inlet port and an outlet port each connected to said intake manifold, and an atmospheric air port normally supplied with atmospheric air,
diaphragm means disposed in said body and movable in accordance with negative pressure in said intake manifold admitted through said inlet port,
a valve member interposed between said atmospheric air port and said outlet port to interrupt communication between said atmospheric air port and said outlet port when the negative pressure in said intake manifold is below a predetermined value and permitting said communication when said negative pressure increases above a predetermined value due to movement of said diaphragm means, and
a disc valve interposed between said valve member and said outlet port to permit only an air flow from said atmospheric air port to said outlet port when said valve member is open, said disc valve member being deflectable only toward said outlet port when said valve member is opened and said body being provided with a pair of ribs disposed at each side of said disc valve, one of said ribs being in abutment with said disc valve when said valve member is closed and the other of said ribs being in abutment therewith when said valve member is opened to limit the deflection of said disc valve.

4,297,985
CATAPULT DEVICE AND PROJECTILE THEREFORE
Rudolph Rodriguez, P.O. Box 423, Fowler, Calif. 93625
Filed Dec. 3, 1979, Ser. No. 99,743
Int. Cl.³ F41B *7/00*
U.S. Cl. 124—22 4 Claims

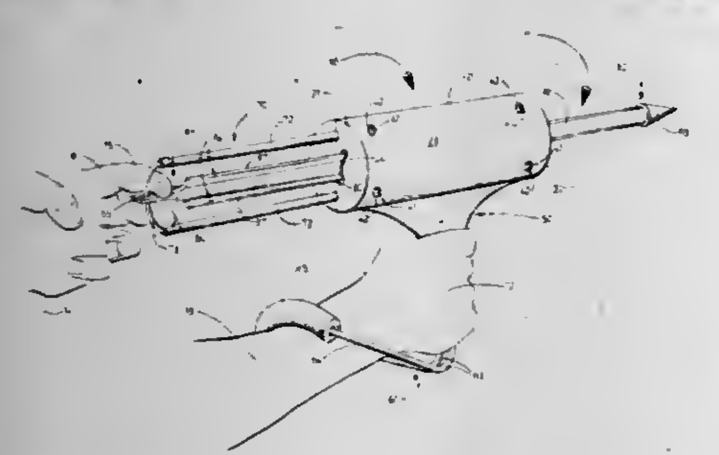

1. A catapult device and projectile therefore comprising a body member, having opposite proximal and distal ends, intersected by a passage extending along an axis through the body member interconnecting said proximal and distal ends, said passage having slots extending radially in a pattern relative to said axis of the passage and extending the entire length of the passage; a grip mounted on the body member; a resilient band mounted on the proximal end of the body member; a projectile of greater length than the passage of the body member, having opposite proximal and distal end portions, transversely dimensioned to be slidably received in the passage and having fins extending radially therefrom in a pattern matching the slots of the body member and extending substantially the entire length of the projectile tapering outwardly therefrom from the distal end portion to the proximal end portion and the fins at said proximal end portion extending radially therefrom a distance nearly equivalent to that of said slots; and a head borne on the distal end portion of the projectile having a transverse dimension greater than at least one transverse dimension of the passage of the body member permitting said projectile to be slidably received in the passage of the body member and retracted by its proximal end portion against the resilient band until the head contacts the distal end of the body member to place the resilient band under tension limited by the contact of the head with the distal end of the body member for release at a velocity controlled thereby along a course controlled by passage of the fins of the projectile in the slots of the body member.

4,297,986
FORCED AIR FIREPLACE HEATING SYSTEM
Joseph E. Lehrer, 3696 S. Hibiscus, Denver, Colo. 80237
Filed Jul. 9, 1979, Ser. No. 56,089
Int. Cl.³ F24B *7/00*
U.S. Cl. 126—121 11 Claims

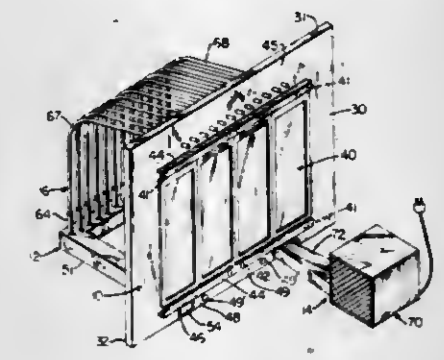

1. A heating system adapted for installation in a fireplace wherein said fireplace includes a firebox communicating with an upper flue and a lower fuel-supporting member positioned in said firebox, said system comprising:
(1) a lower, substantially horizontally extending plenum disposed around the lower periphery of said firebox;
(2) air-delivery means communicating with said plenum;
(3) a plurality of forced air circulating tubes extending upwardly in closely-spaced relation from communication with said plenum and extending substantially horizontally over said fuel-supporting member toward the entrance to said firebox, said tubes terminating in open-ended exhaust portions at the entrance to said firebox whereby air delivered to said plenum by said air-delivery means is forced through said tubes in heat exchange relation to the heat generated in said fireplace for discharge through said open-ended exhaust portions; and
(4) said plenum being of generally U-shaped configuration having opposite sides extending rearwardly away from the entrance to said fireplace with one side projecting rearwardly from the entrance to said firebox along one side of said fuel-supporting member and having an air intake end on said one side communicating with said air-delivery means, an intermediate portion extending between the rearward ends of opposite sides of said plenum, opposite sides of said plenum having open ends, one of said open ends being in communication with said air delivery means, and a removable closure across the other of said open ends.

4,297,987
HEAT EXCHANGE SYSTEM
Lawrence C. Bushee, Florence, Ala., assignor to Amana Refrigeration, Inc., Amana, Iowa
Filed May 11, 1979, Ser. No. 38,089
Int. Cl.³ F24H *1/00*
U.S. Cl. 126—351 11 Claims

1. A heat exchanger system for heating air within an enclosure, comprising:
(a) a heat exchanger containing a fluid;
(b) a burner positioned in the heat exchanger for heating the fluid;
(c) means for transferring heat from the heated fluid to air within the enclosure for heating the air;
(d) means for supplying fuel to the burner;
(e) means for moving a fuel-air mixture formed from the fuel and an available air supply to the burner for combustion; and
(f) a deformable planar member associated with the means

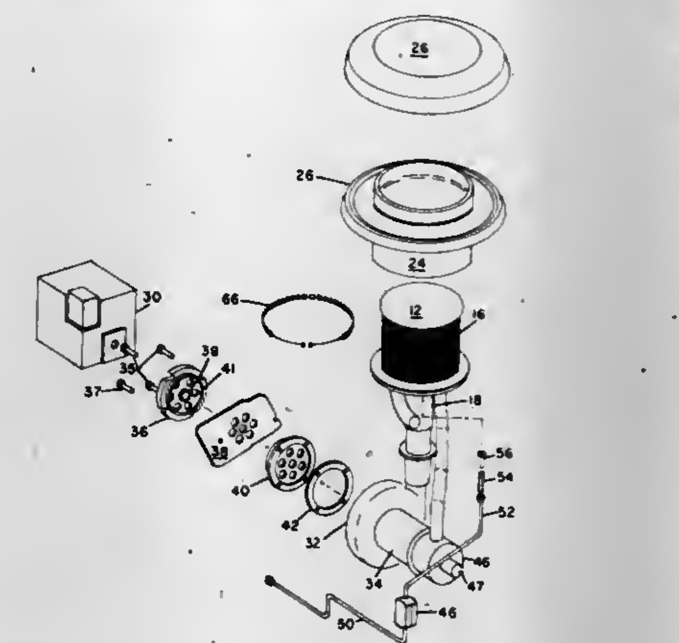

for moving the fuel-air mixture, for metering and mixing fuel with the air and forming a seal such that a predetermined quantity of air may be supplied to the burner for combustion.

4,297,988
SOLAR ENERGY COLLECTOR
Wallace G. Hanson, Rte. 2, Box 103, Dodge Center, Minn. 55927
Filed Feb. 16, 1979, Ser. No. 12,838
Int. Cl.³ F24J *3/02*
U.S. Cl. 126—439 2 Claims

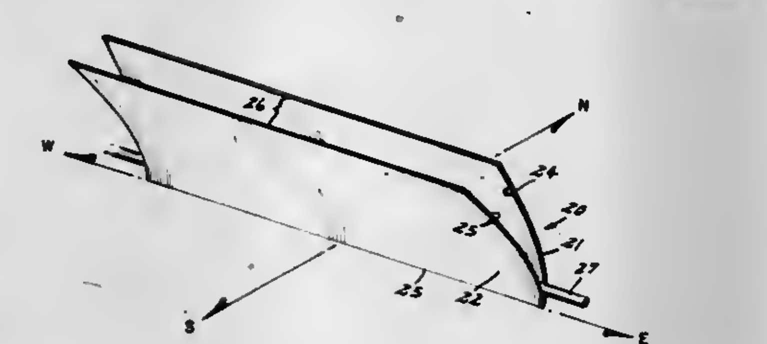

1. In a solar collector having a reflector for concentrating rays and an energy receiver, in combination:
a reflector defined by the opposed surfaces of a pair of intersecting cylindrical paraboloids, one of said surfaces being concave and the other being convex,
the paraboloids intersecting in a line, the line of intersection being substantially horizontal,
said surface defining, in a plane perpendicular to their line of intersection, portions of a pair of intersecting identical parabolas having vertical directrices, and having foci spaced along a line in said plane making, with the horizontal, an angle equal to half the maximum solar altitude at the location of the reflector,
said surfaces terminating, remotely from the intersection of said parabolas, at the points where the tangents to said parabolas make, with the horizontal, angles equal to half said maximum solar altitude, to define the entrance aperture of the reflector.

4,297,989
SOLAR HEAT COLLECTOR
Philip A. Wozny, 405 Shepherd Ave., Cambridge, Md. 21613, and Jerome L. Wozny, 6174 Elm St., Omaha, Nebr. 68106
Continuation-in-part of Ser. No. 88,341, Oct. 26, 1979, abandoned. This application Apr. 17, 1980, Ser. No. 111,114
Int. Cl.³ F24J *3/02*
U.S. Cl. 126—441 5 Claims

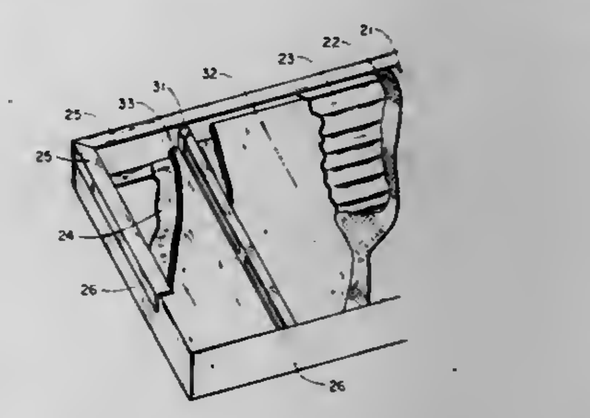

1. An improved solar heat collector of the type having a light admitting layer and an energy absorbing layer wherein the improvement comprises a wire mesh screen positioned between said light admitting layer and said energy absorbing layer, said screen having a light reflecting lower surface proximal said energy absorbing layer and an upper darkened light absorbing surface, and an air flow means directed over at least one surface of said energy absorbing layer.

4,297,990
SOLAR COLLECTOR
John H. Allisbaugh, Indianapolis, Ind., assignor to HowAll Products, Inc., Indianapolis, Ind.
Filed Mar. 8, 1979, Ser. No. 18,652
Int. Cl.³ F24J *3/02*
U.S. Cl. 126—445 4 Claims

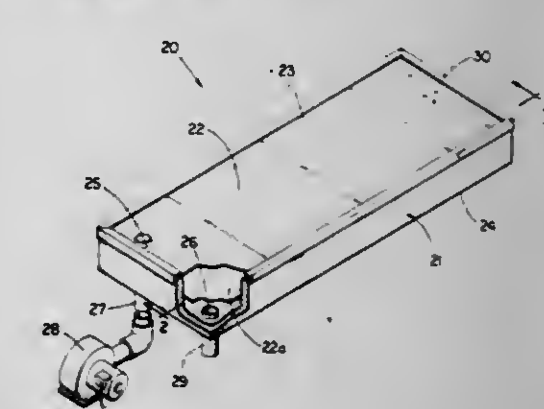

1. A portable, modular, air-to-air solar energy collector for introducing and adding heat to a circulating flow of air, said solar energy collector comprising:
a generally rectangular, free-standing, frame-like enclosure having a back panel, a surrounding side wall, and an enclosing light-transmissive outer panel, the combination of said back panel, said surrounding side wall, and said enclosing light-transmissive outer panel defining an enclosed air space interior thereto;
a solar radiation absorbing plate disposed within said frame-like enclosure, said solar radiation absorbing plate having a radiation-facing top surface and a finned bottom surface, and being suitably arranged to segment said enclosed air space into two air flow passageways;
an air inlet conduit extending from a location exterior of said frame-like enclosure through said back panel and through said solar radiation absorbing plate, said air inlet conduit being suitably adapted for connection to a source of air at a location exterior of said frame-like enclosure;

an air outlet conduit extending from a location exterior of said frame-like enclosure through said back panel, said air outlet conduit being suitably adapted for flow connection to a remote use location for utilization of any exiting air;
said solar radiation absorbing plate and said light-transmissive outer panel defining a first air flow passageway across the top surface of said solar radiation absorbing plate, said first air flow passageway having an inlet end in communication with said air inlet conduit and an opposite exit end, said first air flow passageway being free of any intermediate structures which functionally relate to the transfer of heat; and
said solar radiation absorbing plate and said back panel defining a second air flow passageway across said bottom surface, said second air flow passageway having an inlet end in communication with the exit end of said first air flow passageway at a location adjacent one end of said frame-like enclosure and an opposite exit end in communication with said air outlet conduit adjacent the opposite end of said frame-like enclosure, said air flow passageways being arranged to provide a continuous, singular flow path from said air inlet conduit to said air outlet conduit.

4,297,991
SOLAR COLLECTOR DEVICE
Anthony Easton, Old Saybrook, Conn., assignor to National Solar Corporation, Centerbrook, Conn.
Continuation of Ser. No. 936,192, Aug. 24, 1978, abandoned, which is a division of Ser. No. 795,143, May 9, 1977, abandoned, which is a continuation-in-part of Ser. No. 690,362, May 26, 1976, abandoned. This application May 20, 1980, Ser. No. 151,656
Int. Cl.³ F24J *3/02*
U.S. Cl. 126—448 **1 Claim**

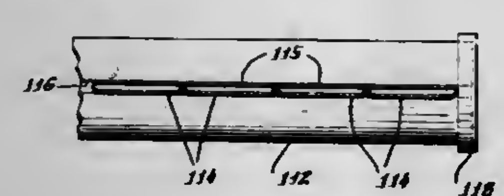

1. In a solar heating system using a moving liquid medium for collecting heat energy as the liquid medium flows through a solar energy collector device, the improvement in said collector device comprising:
(a) a substantially continuous planar surface for collecting solar energy provided exclusively by a plurality of tubes formed from copper tubing with not more than 4.0 percent iron which has been flattened to substantially its maximum diameter to provide two flat faces with an intervening flat passageway for the liquid medium, said passageway having a smooth uninterrupted surface of uniform thickness, and said tubes being disposed in diametric abutting relation to one another to present said substantially continuous planar surface for collecting solar energy;
(b) a first header member having a longitudinal slot into which one end of the flattened and abutting tubes is inserted and connected thereto to seal said slot; and
(c) a second header member having a longitudinal slot into which the other end of the flattened and abutting tubes is inserted and connected thereto to seal said slot.

4,297,992
DISTAL JOINT FINGER SPLINT
Maureen L. LaRue, 3 Eagle Rock Trail, Ormond Beach, Fla. 32074, and Richard R. Larsen, 1308 Laurel Dr., Daytona Beach, Fla. 32017
Filed Nov. 5, 1979, Ser. No. 91,587
Int. Cl.³ A61F *5/10*
U.S. Cl. 128—77 **4 Claims**

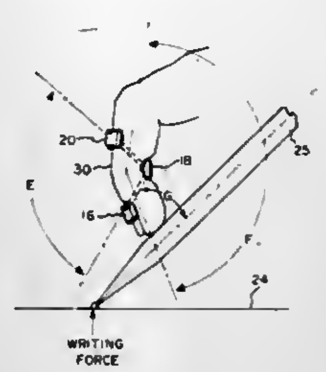

1. A splint for use with an index finger which exhibits hyperextension of a distal joint thereof to permit control of the finger during handwriting, comprising:
a frame having an elongated outer arm with first and second ends, an elongated central arm with first and second ends, and an elongated inner arm with first and second ends, said arms being arranged in parallel relationship with each other, an elongated outer side element having first and second ends, said first end of said outer side element being connected to said first end of said outer arm, said second end of said outer side element being connected to said first end of said central arm, an elongated inner side element having first and second ends, said first end of said inner side element being connected to said first end of said central arm, said second end of said inner side element being connected to said first end of said inner arm, said arms and said side elements forming essentially an E-shape, said frame being otherwise open, said frame being fabricated from a single continuous spring steel wire and having said outer side element and the inner side element bent to form an obtuse angle therebetween;
an outer pad disposed over said outer arm for contacting a dorsal surface of said index finger over the distal phalanx;
a central pad disposed over said central arm for contacting the volar interphalangeal crease of the distal joint of said finger; and
an inner pad disposed over said inner arm for contacting the dorsal surface of said finger over the middle phalanx thereof;
whereby when said splint is disposed on said index finger, said outer pad cooperates with said spring wire side elements to urge said finger into flexion.

4,297,993
AID FOR OSTEOSYNTHESIS
Anton Härle, Münster, Fed. Rep. of Germany, assignor to Howmedica International, Inc.-Zweigniederlassung, Kiel, Kiel, Fed. Rep. of Germany
Filed Feb. 13, 1979, Ser. No. 11,850
Claims priority, application Fed. Rep. of Germany, Feb. 16, 1978, 2806609
Int. Cl.³ A61F *5/04;* **A61B** *17/18*
U.S. Cl. 128—92 D **9 Claims**

1. An aid removably appliable to a bone at an osteosynthesis site to assist in fusing the bone, said aid comprising:
an elongated, bar like member for bridging the osteosynthesis site, said member being formed of a material having sufficient strength to provide the necessary stabilizing assistance to the bone, said member having perforations for receiving fasteners removably applying the member to the bone, and said member having at least one indentation in the surface thereof; and
a carrier material fixed in said indentation of said member,

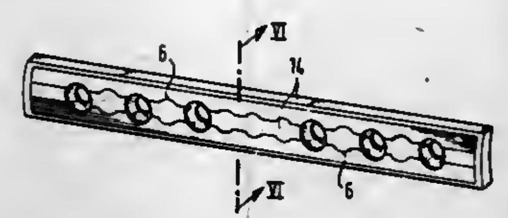

said material being non-absorbable by body tissue and of constant surface form and integrity, said material having an antibiotic substance uniformly distributed therein and released therefrom at a controlled rate.

4,297,994
CERVICAL IMMOBILIZER
Robert W. Basbaw, 7008 Creel Dr., Pensacola, Fla. 32506
Filed Nov. 27, 1979, Ser. No. 97,879
Int. Cl.³ A61F *13/00*
U.S. Cl. 128—133 **25 Claims**

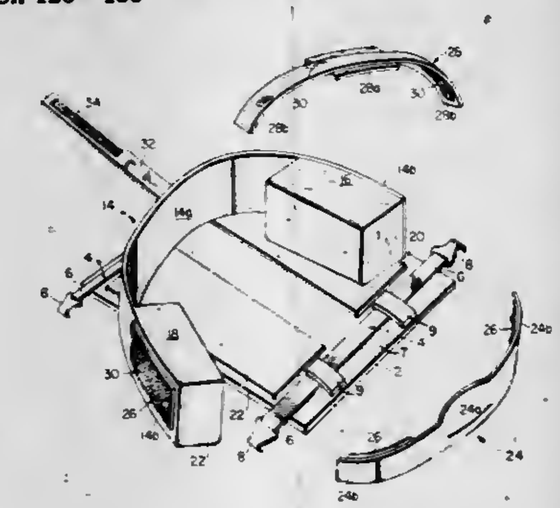

1. A cervical immobilizer for immobilizing a head of a patient on a support comprising:
a base;
a U-shaped headband having a center portion and two end portions attached to said base at said center portion;
a first and second cushion, said first cushion being attached to one of said end portions and said second cushion being attached to the other;
means for attaching said base to the support;
first cooperating means for fastening said first cushion to said base in varying positions;
second cooperating means for fastening said second cushion to said base in varying positions;
means for holding the chin of the patient in a fixed position; and
third cooperating means for fastening said means for holding to said end portions in varying positions.

4,297,995
BANDAGE CONTAINING ATTACHMENT POST
Allyn L. Golub, Coral Gables, Fla., assignor to Key Pharmaceuticals, Inc., Miami, Fla.
Filed Jun. 3, 1980, Ser. No. 156,025
Int. Cl.³ A61L *15/00*
U.S. Cl. 128—156 **22 Claims**

1. A bandage comprising:
(a) a lower portion comprising
(1) a first layer having an upper surface;
(2) a base plate having an upper face and a lower face, said lower face being attached to said upper surface of said first layer, said base plate having a surface area less than the surface of said upper surface of said first layer;
(b) a post extending upwardly from the upper face of said base plate; and

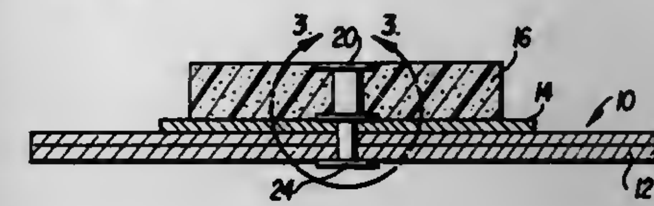

(c) a matrix having an upper surface and a lower surface and a hole extending from said lower surface to said upper surface, said lower surface being in intimate contact with the upper face of said base plate, said post passing through said hole.

4,297,996
STERILE BANDAGE AND TOURNIQUET
Eduardo C. Uriza, 949 - 3 Del Ejercito, Lima 18, Peru
Filed May 7, 1980, Ser. No. 147,375
Int. Cl.³ A61F *13/00*
U.S. Cl. 128—169 **9 Claims**

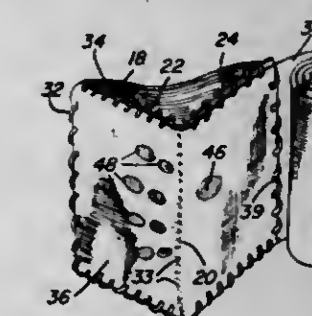

1. A pressure bandage assembly, said assembly including an elongated absorptive pad including a transverse fold zone centrally intermediate its opposite ends dividing said pad into a pair of opposite end pad sections and along which said pad is folded to place said end pad sections in positions relatively angularly disposed between 40° and 90°, an elongated porous and flexible panel having its opposite ends anchored relative to the remote ends of said end pad sections, said panel being substantially and of a length to extend, in a longitudinally straight condition between said remote ends on the included angle side of said pad when said end pad sections are in said 40° to 90° relatively angulated positions.

4,297,997
METHOD AND DEVICE FOR RETAINING COLON CLEANSING TUBE IN PLACE
Ralph S. Clayton, Hendrick Professional Center, 1100 N. 19th St., Abilene, Tex. 79601
Continuation-in-part of Ser. No. 937,591, Aug. 28, 1978. This application May 16, 1980, Ser. No. 150,424
Int. Cl.³ A61F *13/00*
U.S. Cl. 128—169 **18 Claims**

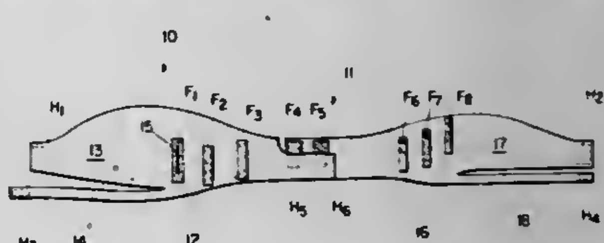

1. A device for squeezing a person's buttocks together to hold a tube in place in the person's anal opening, comprising:

an elongated band shaped to wrap around a person's midsection including the lower abdomen in the front, the hips on the side and the buttocks in the back,
the central section of the band adapted to fit against the front of the person while the ends of the band are adapted to overlap in the back of the person such that when the device is pulled tight and secured, the band pulls the person's buttocks together,
each said end of the band formed as a plurality of straps, each said strap including a first connecting means at the outer end thereof, said band further including, on both sides of said central section, second connecting means positioned to cooperate with the first connecting means of the end of the strap farthest therefrom to form a connection therewith,
whereby with the band wrapped around the person, generally opposed straps are pulled to tighten the band on the person and then its first connecting means is connected to its corresponding second connecting means to tighten the band and hold the person's buttocks together.

4,297,998
PILOT CONTROLLED REGULATOR SECOND STAGE
Tony Christianson (a.k.a. Raymond A. Christianson), P.O. Box 3700, Manhattan Beach, Calif. 90266
Filed Oct. 12, 1979, Ser. No. 84,421
Int. Cl.^{3} A62B *7/04*
U.S. Cl. 128—204.26 **12 Claims**

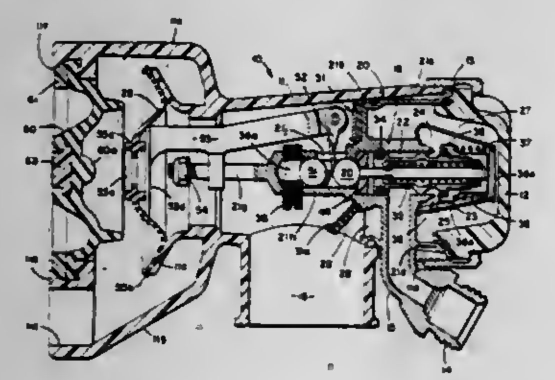

1. In a scuba regulator second stage of the type having a case having an outlet adapted to be connected to a mouthpiece, an open end and a cap removably covering said open end, and a diaphragm mounted within said case, a removable pneumatic amplification valve module comprising:
a generally cup-shaped valve housing having an open ended outer cylindrical skirt and an open ended inner cylindrical section each extending concentrically in a first direction from a closed end of said valve housing, said valve housing being removably inserted into said case via said case open end and mounted within said case with the open end of said cylindrical skirt being sealably covered by said cap, said valve housing including outlet means for directing gas flow to said case outlet,
the open end of said inner cylindrical section forming a valve seat for a poppet valve,
gas inlet means extending through said casing and communicating with the interior of said inner cylindrical section,
a valve poppet movably mounted within said inner cylindrical section, said poppet having a peripherally mounted valve closure adapted to seat against said valve seat whereby gas flows to the interior of said valve housing upon actuation of said poppet valve,
a poppet bias spring having one end engaging and surrounding a portion of said poppet and extending in a direction away from said valve housing closed end,
a spring retainer attached to said inner cylindrical section and including a portion situated beyond the end of said poppet for retaining the other end of said poppet bias spring,
pilot valve means situated within said poppet and cooperating therewith for actuating said poppet valve said pilot valve means having a control member extending through said valve housing closed end, and
linkage means, mounted on the side of said valve housing closed end opposite from said cylindrical skirt, for linking said pilot valve to the diaphragm of said regulator,
said entire valve module, including said valve housing, gas inlet means, poppet valve, pilot valve, spring, spring retainer and linkage means being removable as a unitary assembly from said case through said case open end.

4,297,999
PORTABLE RESUSCITATION APPARATUS
John V. Kitrell, 1740 Yolande, Lincoln, Nebr. 68521
Filed Jul. 19, 1979, Ser. No. 59,079
Int. Cl.^{3} A61M *16/00*
U.S. Cl. 128—205.16 **3 Claims**

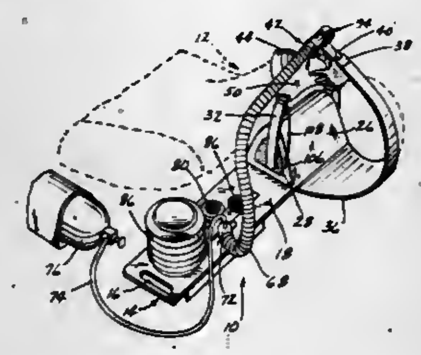

1. A portable resuscitation apparatus, comprising,
a portable support means having top and bottom portions,
a support member extending upwardly from said support means adapted to support the patient's neck to position the patient's head for resuscitation,
a manually operated air supply means mounted on said support means,
a flexible mask means having an air inlet supply base extending therefrom which is in operative communication with said air supply means,
and connector means for detachably connecting said mask means to the patient's face and to maintain the patient on said support member,
said air supply means comprising a flexible bellows pump mounted on said support means,
said support means having a first air passageway formed therein which is in communication with said pump, said base being in communication with said air passageway whereby compression of said flexible bellows pump will supply air to said mask means,
said bellows pump being movable between compressed and extended positions, a spring means in said bellows pump for yieldably resisting the compression of said bellows pump and for moving said bellows pump from its compressed position to its extended position,
said spring means being of the two-stage type so that said spring means will yieldably resist, at a first predetermined rate, the compression of said bellows pump during a predetermined initial portion of its compression stroke and will yieldably resist, at a rate greater than said first predetermined rate, during a predetermined portion of its compression stroke after said initial portion.

4,298,000
FLUID DISPENSING DEVICE
Gary A. Thill, St. Paul, Minn., and Jerome E. Strand, St. Joseph Township, St. Croix County, Wis., assignors to Minnesota Mining and Manufacturing Company, St. Paul, Minn.
Division of Ser. No. 958,678, Nov. 8, 1978, Pat. No. 4,202,333. This application Apr. 28, 1980, Ser. No. 144,614
Int. Cl.^{3} A61M *5/00*
U.S. Cl. 128—218 A **8 Claims**

1. A dispensing device adapted for engaging fluidfilled syringe to dispense fluid from the syringe at a slow, steady rate, said device comprising a frame adapted for supporting the syringe; a hose adapted to be coupled to an outlet opening of the syringe; and an activating mechanism including a spring coupled to a block movable between a disengaged position out of engagement with the plunger of a syringe supported on the frame to afford insertion or removal of the syringe, and an engaged positon at which the block engages the plunger and the spring applies force to the plunger through the block to cause fluid within said syringe to flow into said hose, wherein the device further includes:
a metering assembly including a first part having two chambers and an orifice communicating between said chambers; a capillary tube extending between said chambers; and a second part mounted on said first part for relative movement between a purging position spaced from said orifice so that fluid can flow between said chambers through said orifice, and a metering position blocking said orifice so that fluid can pass between said chambers only through said capillary tube;
one of said parts being adapted to be releasably attached to the housing of the syringe with an outlet opening of the syringe communicating with one of said chambers and the hose being attached to the metering assembly with the bore of the hose communicating with the other of said chambers;
said frame comprises support members adapted for engaging and supporting said metering assembly only when the parts of said metering assembly are in their metering position;
said spring is adapted for applying a uniform force to move the block as the plunger moves into the syringe; and
said activating mechanism includes structure adapted to secure the metering assembly in the support members when said activating mechanism positions said block in said engaged position.

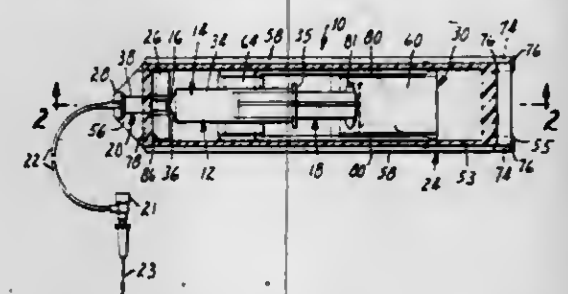

4,298,001
FLUID FLOW CONNECTOR UNIT AND METHOD
Thomas S. Hargest, III, 1078 Winslow Dr., Charleston, S.C. 29412, and William C. Ryan, Jr., 1583 Sanford Rd., Charleston, S.C. 29407
Filed Aug. 8, 1980, Ser. No. 176,287
Int. Cl.^{3} A61M *3/00*
U.S. Cl. 128—247 **12 Claims**

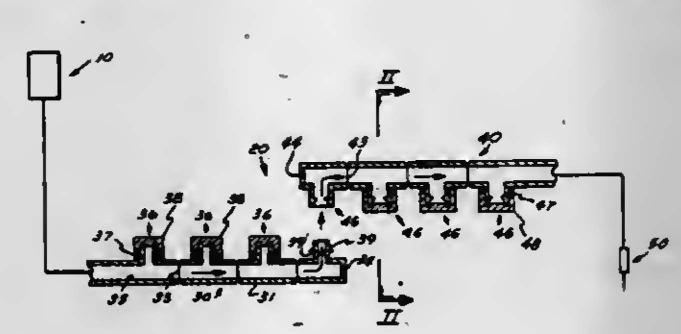

1. A multiple access sterile connector unit comprising a pair of connector elements, each element having a body defining a fluid manifold extending along the length of same, one end of said element being sealed and an opposite end of said element being operably associable with one of a source of fluid and a fluid applicator means, each of said connector elements further having a plurality of spacially separate access ports located therealong and extending outwardly therefrom, said access ports defining a fluid passageway therethrough in communication with said fluid manifold, and each acess port having removable cover means at an outer free end of same in association therewith to maintain said outer free end of said port sterile while said cover means is initially received thereat, said access ports being adapted for operable association with an access port on the other of said connector elements to establish fluid flow through said unit, each of said elements further being adapted for removal of associated access ports when desired and subsequent reassociation of other ports, whereby fluid flow to a patient may be disrupted and reinstituted under sterile conditions.

4,298,002
POROUS HYDROPHILIC MATERIALS, CHAMBERS THEREFROM, AND DEVICES COMPRISING SUCH CHAMBERS AND BIOLOGICALLY ACTIVE TISSUE AND METHODS OF PREPARATION
Samuel H. Ronel, Princeton; Mark J. D'Andrea, Neshanic Station, both of N.J.; William H. Dobelle; Gregory F. Klomp, both of New York, N.Y., and Hiroshi Hashiguchi, Riverdale, N.Y., assignors to National Patent Development Corporation, New York, N.Y.
Filed Sep. 10, 1979, Ser. No. 73,680
Int. Cl.^{3} A61M *7/00*
U.S. Cl. 128—260 **43 Claims**

1. A synthetic, hydrophilic, polymeric material of a polymer of at least one monomer from the group consisting of a monoalkylene glycol monoester of methacrylic acid, a polyalkylene glycol monester of methacrylic acid, a monoalkylene glycol monoester of crylic acid, a polyalkylene glycol monoester, a N-alkyl substituted acrylamide, a N,N-dialkyl substituted acrylamide, a N-alkyl substituted methacrylamide, a N,N-dialkyl substituted methacrylamide, N-vinylpyrrolidone, an alkyl substituted N-vinylpyrrolidone, and vicinal epoxy alkyl 2-alkenoate, characterized by: water-insolubility; water-swellability; biological inertness; non-toxicity to and compatibility with living tissue; retention of structural integrity over long periods of time in contact with body fluids; a water-uptake capability when in osmotic equilibrium with water of from 5 to 4000 weight percent based on the weight of said hydrophilic material to form a hydrogel; an ultimate strength of about 3 g/mm^2 to 200 g/mm^2, an initial tear strength of 0.1 g/mm^2 to 20 g/mm^2, and a progagation tear strength of 0.5 g/mm to 10 g/mm; and 3-dimensional, reticulum-like porosity in which at least about 75 percent of the remaining pores, as determined under a scanning electron microscope, are characterized by an average diameter, not exceeding about 10 microns and in which below about 25 percent of the pores are characterized by an average diameter generally sufficiently small so as to prevent an immune rejection when said hydrophilic material containing biologically active tissue therein is in contact with living tissue environment, the geometry of such permitting the ingress or egress of a steroid.

4,298,003
SYSTEM FOR DELIVERING AGENT AT ZERO ORDER RATE WITH EMERGING AGENT BELOW SATURATION
Felix Theeuwes, Los Altos, and Richard Cortese, San Jose, both of Calif., assignors to ALZA Corporation, Palo Alto, Calif.
Filed May 12, 1980, Ser. No. 149,020
Int. Cl.³ A61M *7/00*
U.S. Cl. 128—260 15 Claims

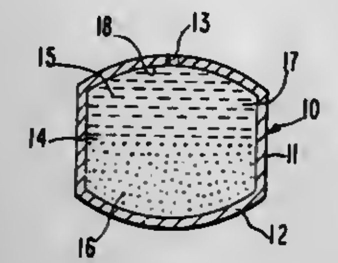

1. An osmotic system for the controlled delivery of a beneficial agent to an environment of use, comprising:
(a) a wall formed of a semipermeable material permeable to the passage of an exterior fluid, and substantially impermeable to the passage of agents and compounds, the wall surrounding and forming;
(b) a compartment containing a layer of an agent that is soluble in the exterior fluid and exhibits an osmotic pressure gradient across the wall against the fluid, and a layer of a compound that is substantially insoluble in the exterior fluid; and,
(c) a passageway through the wall communicating with the interface defined by the wall's inside surface and the surface of the layer of the insoluble compound.

4,298,004
SURGICAL METHOD FOR ALTERING THE CURVATURE OF THE CORNEA OF RABBITS
Ronald A. Schachar, 213 N. Barrett, Denison, Tex. 75020, and Norman S. Levy, 2218 NW. 29th St., Gainesville, Fla. 32605
Filed Feb. 27, 1979, Ser. No. 15,656
Int. Cl.³ A61F *17/32, 1/16*
U.S. Cl. 128—305 11 Claims

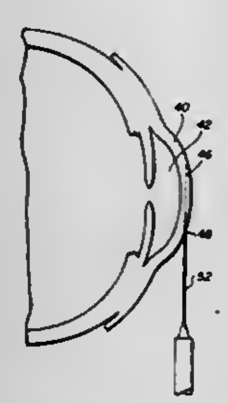

1. A method for decreasing the radius of curvature of a cornea comprising:
forming an incision in the cornea that extends over the central portion of the cornea, said incision including a relatively small opening that extends through the surface of the cornea; and
introducing a heated inert, non-antigenic transparent fluid material into said incision to decrease the radius of curvature of the cornea, said inert, non-antigenic transparent fluid material being of the type that is a gel at body temperature after cooling.

4,298,005
RADIATION APPARATUS
Maxim F. Mutzhas, Pilgersheimerstrasse 64, BRD 8000 Munchen 90, Fed. Rep. of Germany
Continuation of Ser. No. 773,844, Mar. 3, 1977, abandoned. This application Jul. 5, 1979, Ser. No. 55,002
Claims priority, application Fed. Rep. of Germany, Mar. 5, 1976, 2609273
Int. Cl.³ A61N *5/00*; G01J *1/00*
U.S. Cl. 128—396 18 Claims

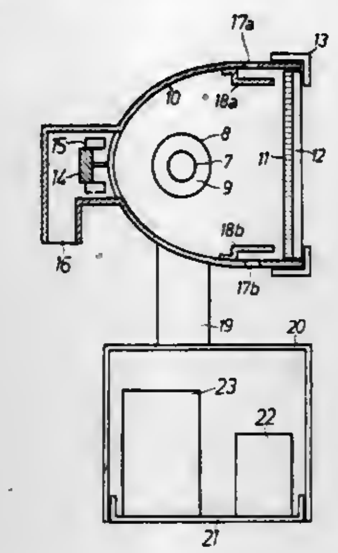

1. In a radiation apparatus for cosmetic, photobiological and/or photochemical purposes comprising,
housing means having an opening therein,
at least one ultraviolet ray source in said housing means and positioned to direct its rays toward and through said opening, said ray source comprising a mercury vapor high pressure lamp containing a metal halogen vapor which lamp produces radiation of substantial intensity in the wavelength range of 320–450 nm,
reflector means formed of a material having a high reflectance for radiation in the wavelength range of 320–450 nm for reflecting the radiation produced by said ray source, said reflector means comprising said housing means and said material comprising polished oxidized aluminum,
filter means for completely suppressing all short wavelength rays passing through said opening having wavelengths below approximately 320 nm, and for suppressing longer visible wavelength rays passing through said opening having wavelengths above approximately 450 nm, and
cooling means for cooling said housing and said source during operation, said cooling means comprising ventilator means for ventilating said housing,
the aforementioned components of said apparatus coacting in combination with each other to result in the production of radiation in the wavelength range of 320–450 nm of at least 150 W/m².

4,298,006
SYSTEMIC HYPERTHERMIA WITH IMPROVED TEMPERATURE SENSING APPARATUS AND METHOD
Leon C. Parks, Brandon, Miss., assignor to Research Against Cancer, Inc., Jackson, Miss.
Filed Apr. 30, 1980, Ser. No. 145,053
Int. Cl.³ A61F *7/00*
U.S. Cl. 128—399 4 Claims

1. In a process of retarding the growth of cancer cells in a human patient which comprises the steps of establishing a sterile extracorporeal flow path for blood having an inlet, an outlet and a temperature control zone therebetween, establishing communication of the inlet and said extracorporeal flow path with the patient's bloodsream so that blood can be withdrawn and supplied to said extracorporeal flow path without adversely affecting the blood circulation in the areas from which the blood is withdrawn, establishing communication of the outlet of said extracorporeal flow path with the patient's bloodstream so that blood flowing from the extracorporal flow path is returned to the bloodstream in such a way as to be distributed systemically, pumping blood withdrawn from the patient's bloodstream along said extracorporeal flow path through said temperature control zone at a controlled rate of at least approximately 1 liter per minute and returning the same to the patient's bloodstream to be distributed systemically, as aforesaid, controlling the temperature of the blood flowing along said extracorporeal flow path through said temperature control zone for an initial period during which the temperature control zone for an initial period during which the temperature level of the blood within the zone is raised without causing the same to reach localized temperatures in excess of approximately 45° C. so that the systemic distribution of the returned blood gradually increases the patient's core body temperature to a generally stable temperature condition at a level of approximately 41.5° C. but not higher than approximately 42.5° C., and maintaining control of the temperature of the blood flowing along said extracorporeal flow path through said temperature control zone at said generally stable temperature for a second time period sufficient to effect the desired treatment; the improvement of which comprises the steps of:

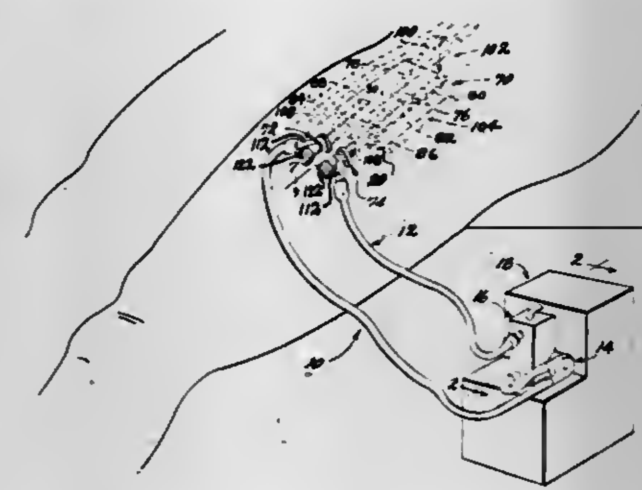

measuring the patient's core body temperature in the patient's bladder and
utilizing the measured bladder temperature in controlling the temperature of the blood flowing along said extracorporeal flow path.

4,298,007
ATRIAL RATE SENSITIVE CARDIAC PACER CIRCUIT
Thomas C. Wright, New Brighton; Terrence R. Hudrlik, Minneapolis; Perry A. Mills, Roseville; Robert C. Rust, South St. Paul, and Thomas G. Wallner, St. Paul, all of Minn., assignors to Cardiac Pacemakers, Inc., St. Paul, Minn.
Filed Jul. 21, 1980, Ser. No. 170,948
Int. Cl.³ A61N *1/36*
U.S. Cl. 128—419 PG 12 Claims

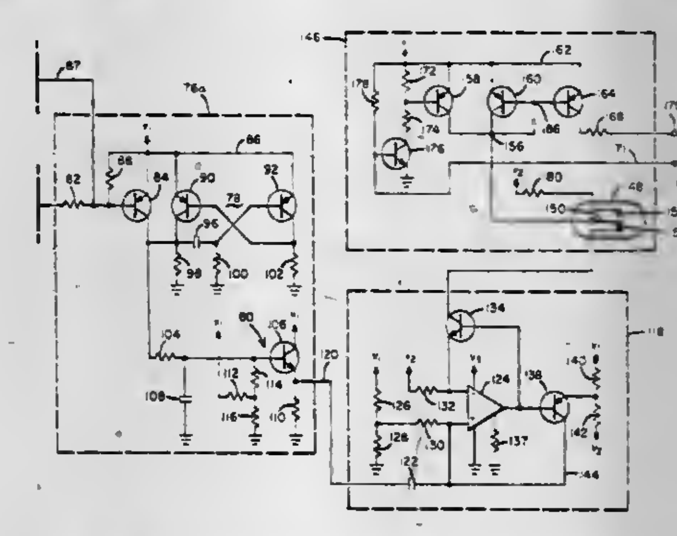

1. Cardiac stimulating apparatus having means for adjusting the frequency of stimulation as a function of physiologic demand, comprising in combination:
(a) a pulse generator having timing means therein for determining the frequency at which cardiac stimulating pulses are produced;
(b) detector means for detecting natural atrial electrical activity characteristic of physiologic demand and producing trigger signals predominantly related to P-wave occurrences;
(c) first means coupled to said detector means for producing an electrical signal of predetermined energy content upon receipt of each of said trigger signals;
(d) second means having a first time constant coupled to receive said electrical signals of predetermined energy content for producing a voltage proportional in amplitude to the average repetition rate of said P-wave occurrences during a predetermined time interval;
(e) third means coupled to receive said voltage from said second means and having a second time constant which is relatively long compared to said first time constant for producing a control signal proportional in amplitude to changes in the repetition rate of said P-wave; and

4,298,008
DEVICE FOR BRASSIERES
Nadia M. Kylberg, Angsklockevagen 50, S-181 61 Lidingo, Sweden
Filed Nov. 28, 1979, Ser. No. 98,072
Claims priority, application Sweden, Jun. 21, 1979, 7905488
Int. Cl.³ A41C *1/14*
U.S. Cl. 128—477 10 Claims

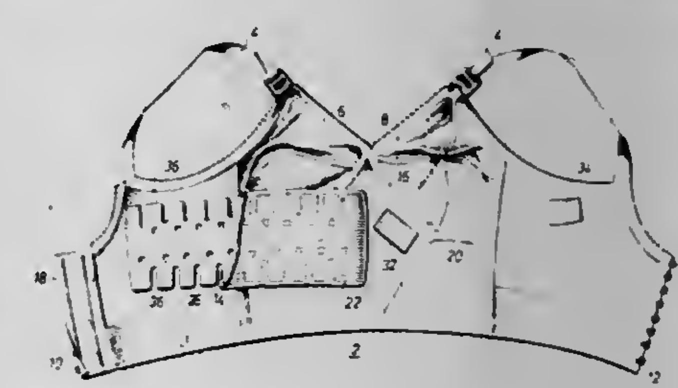

1. A device for brassieres characterized in that in each half of the brassiere is provided an essentially quadrangular band-shaped member of a flexible, supporting material extending from the area at the centre of the brassiere in the direction towards the back part of the brassiere, said band-shaped member having a thinner portion extending along a longitudinal line so as to be foldable along said line, which partially extends substantially along the lower edge of the cup of said half of the brassiere, so that in use the part of the band-shaped member which is located on one side of said line bears against the lower side of the bust so as to support it with the support from the other part of said band-shaped member, which below the bust bears against the body, transverse slots being formed in both the longitudinal edges of the band-shaped member so that said band-shaped member smoothly adjusts itself to the shape of the bust and the body.

4,298,009
ULTRASOUND MAMMARY SCANNING APPARATUS
Reuben S. Mezrich, Miami, Fla.; David H. R. Vilkomerson, Princeton, and Bayard Gardineer, Skillman, both of N.J., assignors to Technicare Corporation, Solon, Ohio
Filed Jan. 7, 1980, Ser. No. 109,947
Int. Cl.^{3} A61B *10/00*
U.S. Cl. 128—660 6 Claims

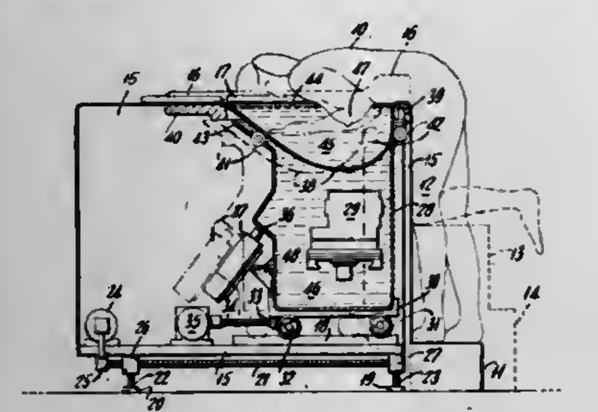

1. A system employing sonic energy to derive select ones of a plurality of substantially parallel sectional images of the human breast of a subject comprising:
(a) a frame member adapted at one extremity to receive the subject having the upper body generally prone, parallel to, and at least partially supported by a top surface of said frame member, said frame member defining a void in said top surface to receive the breast area of the subject;
(b) means associated with said frame member for locating the prone upper body of the subject along a given axis;
(c) a first sonically conductive fluid pool beneath and generally filling said void, said first pool being contained by a flexible, sonically transparent bag member suspended from said top surface, thereby to receive the breast area of the subject in said first pool;
(d) a second sonically conductive fluid pool contained by a rigid tank, beneath said first pool, the open top of said bag member being larger in horizontal section than is said tank, said bag member being partially deformed downwardly into said tank by said first pool, said second pool filling said tank to contact the lower surface of said bag member;
(e) first carriage means for carrying and translating said rigid tank relative to said frame member and to said bag member in a direction parallel to said given axis;
(f) ultrasound transceiver means including
(i) transducer means which oscillates about an axis normal to said given axis, and
(ii) sonic focusing means intermediate said transducer means and said subject; and
(g) second carriage means for carrying and translating said transciever means within said tank in a direction normal to said given axis.

4,298,010
BREATHING ALCOHOL TESTING DEVICE
Wolfgang Eckstein, Sereetz, and Horst Rabenecker, Klein Parin, both of Fed. Rep. of Germany, assignors to Drägerwerk Aktiengesellschaft, Fed. Rep. of Germany
Filed Oct. 30, 1979, Ser. No. 89,463
Claims priority, application Fed. Rep. of Germany, Nov. 8, 1978, 2848337
Int. Cl.^{3} A61B *5/00*
U.S. Cl. 128—719 9 Claims

1. An improved breathing alcohol testing device for determining the alcohol content in the expiratory air of a person, the device being of the type having an elongated detector tube with a bore extending therethrough from an entrance opening to an outlet opening, a gas testing substance mounted within the bore, throughout a length thereof, intermediate the entrance opening and the outlet opening for passage therethrough of the air to be tested, the gas testing substance being of the type which discolors responsive to the alcohol content in the air and wherein the length of the discoloration of the substance is a measure of the alcohol content, wherein the improvement comprises a pump connected to the detector tube for moving the expiratory air to be tested through the detector

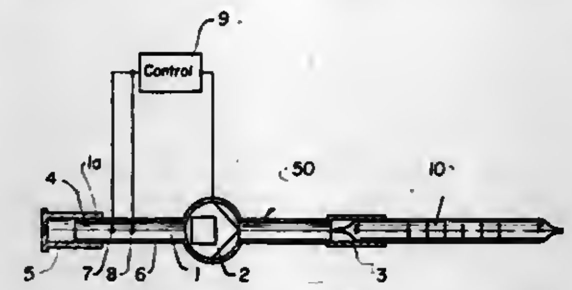

tube, pressure sensing means associated with the tube for sensing the pressure therein adjacent said entrance opening upstream of the gas testing substance, and control means connected to said pressure sensing means and to said pump for starting said pump at a predetermined pressure so that said pump forces the expiratory air through the detector tube and through the gas testing substance.

4,298,011
BLOOD SAMPLE COLLECTOR
Henry H. Mangurten, 1640 Barry La., Glenview, Ill. 60025, and Chester F. Vanek, 6812 Charlotte, Crystal Lake, Ill. 60014
Filed Sep. 7, 1979, Ser. No. 73,232
Int. Cl.^{3} A61B *5/14*
U.S. Cl. 128—763 5 Claims

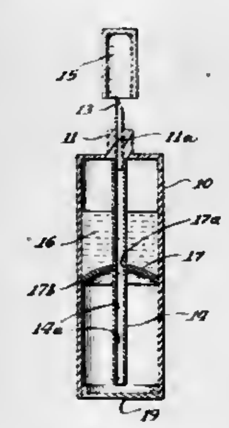

1. A disposable blood sample collector comprising a cylindrical container having an integrally formed end wall at one end and an open other end, a closure closing the other open end, a disc of frangible inert material sealingly positioned within said container dividing said container into one portion as a chamber containing a blood culture medium and a second portion as an air chamber, a hypodermic needle extending through said end wall communicating the exterior of the container with said one portion, an elongated tube tightly fitted to said needle extension within said container and extending axially therewithin through said disc and communicating with said second portion, the container wall being flexible for deflection inwardly to expel air from said one portion and to return to cylindrical form when released, the needle adapted to engage the blood sample to draw the sample into said air chamber.

4,298,012
METHOD OF INCREASING THE SPECIFIC VOLUME OF TOBACCO RIBS
Waldemar Wochnowski, Hamburg, Fed. Rep. of Germany, assignor to Hauni-Werke Körber & Co. KG., Hamburg, Fed. Rep. of Germany
Filed Apr. 20, 1978, Ser. No. 898,337
Claims priority, application United Kingdom, Apr. 26, 1977, 17428/77
Int. Cl.^{3} A24B *3/18*
U.S. Cl. 131—296 7 Claims

1. A method of increasing the specific volume of tobacco ribs which are separated from tobacco leaf laminae, comprising the steps of conveying a stream of ribs along a predetermined path; agitating the ribs including subjecting the ribs to the action of steam which is conveyed upwardly across said path to cause the ribs of said stream to float in the ascending steam; condensing the steam on the external surfaces of the ribs to thereby wet such external surfaces and to cause release of heat as a result of condensation; effecting penetration of released heat and of condensate into the interior of ribs; maintaining said action for an interval of the time which suffices to cause evaporation of moisture in and resulting expansion of ribs; and rolling, severing and drying the expanded ribs immediately upon completion of said maintaining step.

4,298,013
METHOD FOR RECYCLING CELLULOSIC WASTER MATERIALS FROM TOBACCO PRODUCT MANUFACTURE
Bernard A. Semp; Daniel M. Teng, and Gus D. Keritsis, all of Richmond, Va., assignors to Philip Morris, Inc., New York, N.Y.
Filed Apr. 28, 1980, Ser. No. 144,227
Int. Cl.^{3} A24B *3/00, 3/12*
U.S. Cl. 131—308 19 Claims

1. A method of recycling cellulosic waste material generated during tobacco manufacturing which comprises:
(a) subjecting the cellulosic waste material to enzymatic saccharification under conditions which promote hydrolysis of cellulose to simple sugars;
(b) recovering the sugar produced in step (a); and
(c) employing the recovered sugar in a tobacco treatment process.

4,298,014
HAIR PROCESSING SHIELD
Jean MacLennan, 115 Lafayette Rd., Northampton, N.H. 03862
Filed Feb. 13, 1980, Ser. No. 121,050
Int. Cl.^{3} A45D *1/00*
U.S. Cl. 132—9 8 Claims

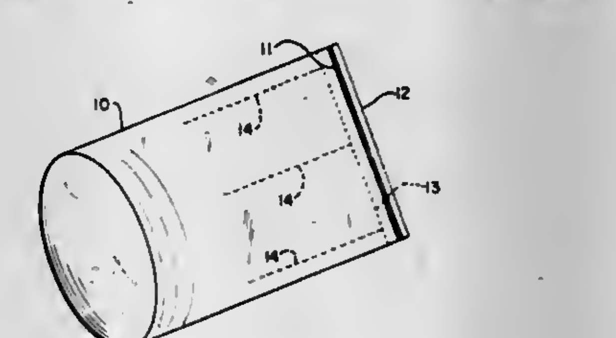

1. A hair processing shield comprising a tube of a flexible plastic film sized to fit over a human head and cover the hair thereon and having at least 2 hand tearable longitudinal lines of perforations therein at one end of said tube, which when two adjacent lines of perforations are torn with one end of the flap therebetween being freed permits said flap to be folded down to form a pocket the sides of which are open.

4,298,015
DISHWASHER
Antonio M. Garza, Jamaica #401, Vista – Hermosa, Monterrey, N.L., Mexico
Filed Dec. 12, 1979, Ser. No. 102,861
Int. Cl.^{3} B08B *3/02*
U.S. Cl. 134—100 6 Claims

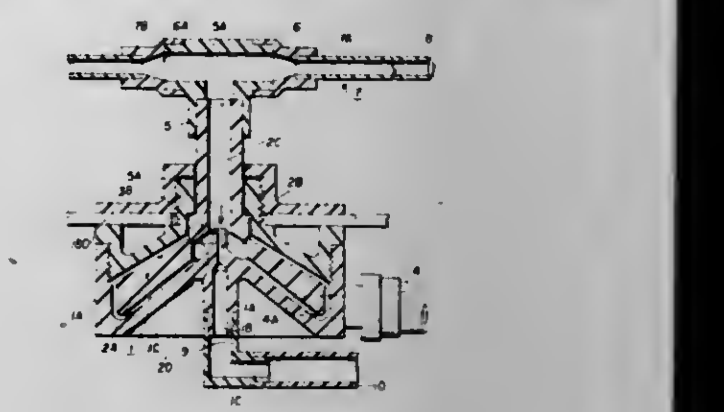

1. A hydraulically operated dishwasher comprising in combination, motive means comprising a hydraulic rotatable turbine coupled to a water inlet channel to cause rotation thereof in response to water flow inpact into a turbine member by water passed from a water main into said inlet channel, a water flow path through said turbine, a rotatable spray arm coupled for rotation by the rotatable turbine including a transit channel for passing the water flow from said turbine through spray outlets forcefully in a predetermined direction for washing dishes, and a rack for placing dishes to be cleaned in the spray path of said arm and holding the dishes, such as plates, disposed substantially along said predetermined direction of spray, thereby to be washed by the water flowing through the motive means and the sray arm wherein the turbine has a set of conically disposed blades surrounded by a housing with a conical member extending from said transit channel down an inclined path with the water flow path to the spray arm directed up the inclined path.

4,298,016
LOCKING MECHANISM FOR FOLDABLE WALKER
Herbert J. Garelick, Saint Paul, Minn., assignor to Garelick Mfg. Co., Saint Paul Park, Minn.
Filed Jan. 23, 1980, Ser. No. 161,674
Int. Cl.^{3} A61H *3/00*
U.S. Cl. 135—67 9 Claims

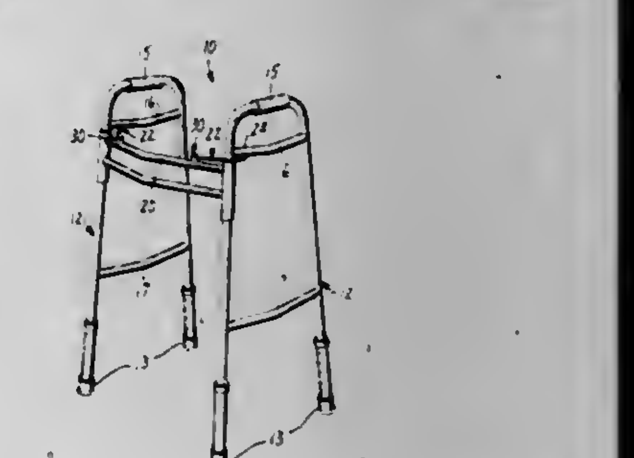

1. In a foldable walker of the type having a pair of side members each pivotally connected to a front member and having a bridging member extending from each side member to said front member, wherein the improvement comprises a bridge member comprising an elongated rod which is mounted at its first end to said side member and received at its second end through an aperture in a locking member carried on said front member, said elongated rod having a recessed portion

therein near its second end, said locking member comprising a housing having a transverse aperture therethrough, said housing including a mounting stem which is affixed to said front member, wherein a button member having a transverse aperture therethrough is received in said housing and is movable between an outward position and an inward position, wherein bias means normally biases said button member to said outward position, and wherein said button member is adapted to engage said recessed portion of said elongated rod when said recessed portion is moved into said housing and is adapted to release said elongated rod when said button member is moved to its inward position.

4,298,017

AUTOMATIC FLUID COMPONENT SHUT OFF SYSTEM

Robert D. Hetherington, Sunland, Calif., assignor to Poly-Glas Systems, Sun Valley, Calif.

Filed Feb. 4, 1980, Ser. No. 118,237

Int. Cl.³ G05D *11/035*

U.S. Cl. 137—1 16 Claims

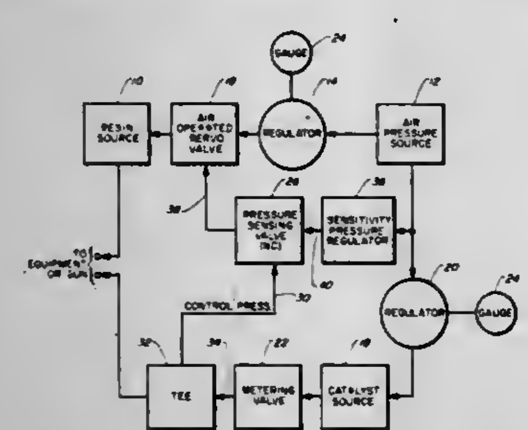

14. A method for shutting off the flow of resin in a plural component system when the catalyst pressure falls below a predetermined minimum flow pressure comprising:
connecting a pressure sensing valve in the air supply to a pneumatically operated servo valve controlling the supply of resin;
sensing the flow pressure of said catalyst with said pressure sensing valve;
establishing a pressure control point by metering the flow pressure of catalyst to said pressure sensing valve at which said valve will shut off the flow of air to said servo valve thereby shutting off the flow of resin;
regulating the air flow through said pressure sensing valve to equalize the flow pressure of said catalyst.

4,298,018

PUMPING PROCESS

William J. Haggard, Cincinnati, Ohio, assignor to Chemed Corporation, Cincinnati, Ohio

Filed Jul. 29, 1980, Ser. No. 173,400

Int. Cl.³ F17D *1/14*

U.S. Cl. 137—3 4 Claims

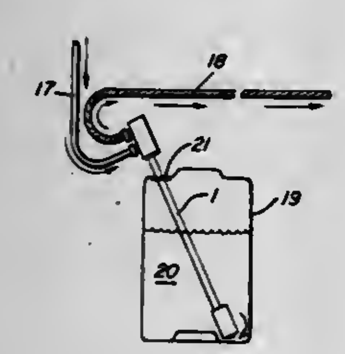

1. The method of pumping a viscous water soluble feed liquid with an eductor pump, said pump having
(a) a venturi element;
(b) an inlet for drive liquid, said inlet feeding to the jet of the venturi element;
(c) an inlet for feed liquid, said inlet feeding to the area beyond the said jet;
(d) an outlet tube fed by the venturi element;
said pump being submerged in said feed liquid; using water as the drive liquid, said method comprising
(1) driving water through the venturi element of the eductor pump on a drive cycle thereby dissolving water soluble liquid in the venturi element and forming a water solution thereof, which solution is driven up the outlet tube and out of the pump;
(2) stopping the drive cycle, whereupon water solution in the outlet tube sinks back down into the feed inlet, where it dilutes the viscous feed liquid in the area of the inlet; thereby initiating a rest cycle;
(3) alternately repeating Steps (1) and (2), the time of the drive cycle in (1) being about 90-95% of the total of drive cycle plus rest cycle.

4,298,019

METHOD AND SYSTEM FOR CONTROLLING THE FLUID LEVEL IN A DRAIN TANK

Thomas E. Daransky, and John D. Dickinson, both of Springfield, Pa., assignors to Westinghouse Electric Corp., Pittsburgh, Pa.

Filed Dec. 27, 1979, Ser. No. 107,799

Int. Cl.³ G05D *7/03, 9/04*

U.S. Cl. 137—9 5 Claims

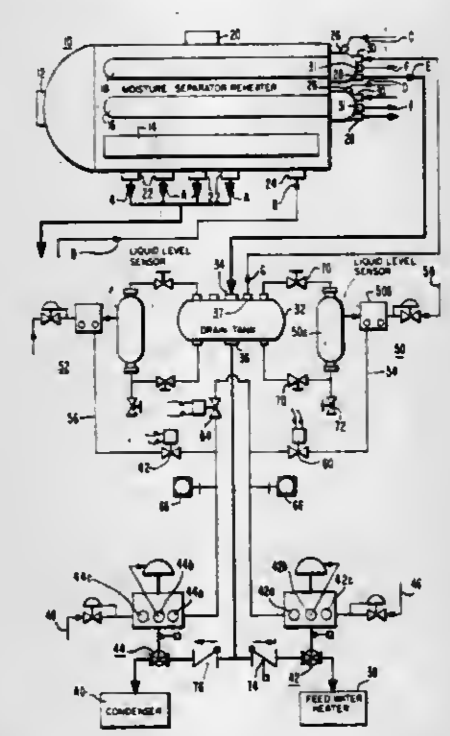

5. A method for regulating the fluid flow rates to two fluid sinks from a fluid utilizing apparatus, said method comprising:
receiving fluid from the fluid utilizing apparatus through an inlet port in a drain tank;
generating first and second signals each of which is indicative of the fluid level in the drain tank;
transmitting said first and second signals to a first and second valve, respectively;
modulating said first valve to provide fluid flow through an outlet port in the drain tank to a first fluid sink and maintain a desired fluid level in said drain tank in response to said signal transmitted thereto when said signal is indicative of a fluid level less than a predetermined height;
modulating said second valve to provide fluid flow to a second fluid sink in response to said signal transmitted thereto when said signal is indicative of a fluid level as least as great as said predetermined height;
monitoring said first and second signals;

obstructing said first signal transmission to said first valve when said first signal is out of a predetermined range;
obstructing said second signal transmission to said second valve when said second signal is out of said predetermined range;
transmitting said second signal to said first valve when said first signal is out of said predetermined range; and
transmitting said first signal to said second valve when said second signal is out of said predetermined range.

4,298,020

INTEGRATED VALVE DEVICE

Masami Inada, Kariya; Kazuhiko Kitamura, Toyota; Shoji Ito, Nagoya; Takao Nonoyama, and Riichi Tsuji, both of Toyota, all of Japan, assignors to Aisin Seiki Kabushiki Kaisha, Kariya and Toyota Jidosha Kogyo Kabushiki Kaisha, Toyota, both of, Japan

Filed Jul. 24, 1979, Ser. No. 60,037

Claims priority, application Japan, Jul. 25, 1978, 53-102038[U]

Int. Cl.³ F16K *51/00, 31/12*

U.S. Cl. 137—315 2 Claims

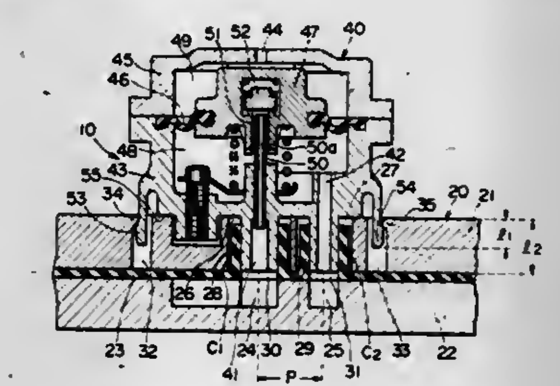

1. An integrated valve device for fluid control systems comprising base board means formed with at least two openings, and control valve means having at least two ports adapted to communicate with said openings respectively, said base board means having a plurality of channels formed therein, each of said channels being independent of one another for fluid communication with individual ones of said openings, said control valve means including a valve for controlling fluid communication between said channels through said openings, said control valve means being provided at the outer periphery thereof with at least a pair of resilient fingers, said fingers being deformable toward the radial direction thereof and being provided with stepped portions, said base board means having corresponding openings engageable with said fingers, and walls defining the corresponding openings, said walls being formed with shoulders radially spaced from said walls for contacting said stepped portions when said control valve means is mounted on said base board means and wherein said control means includes a flat land adapted to seat on the outer surface of said base board means, said flat level being disposed between one of said openings and said fingers when said control valve means is mounted on said base board means

---

4,298,021

WINTERIZING APPARATUS FOR RECREATIONAL VEHICLES, VACATION HOMES AND THE LIKE

Milton R. Bozeman, 1905 Sixth Ave. North, Great Falls, Mont. 59405

Filed Dec. 12, 1979, Ser. No. 102,765

Int. Cl.³ E03C *1/02*

U.S. Cl. 137—334 3 Claims

1. Apparatus for winterizing recreational vehicles, vacation homes and the like comprising:
a first conduit interconnecting a water supply with a water heater,
pump means connected in said first conduit for pumping water through said first conduit from said supply toward said heater,
a first solenoid valve connected to said first conduit between the water supply and said pump means,
a second conduit connected to said first conduit downstream of said pump means for forming a cold water source,
a third conduit connected to said first conduit downstream of said second conduit,
a first check valve connected to said third conduit for passing water only downstream of said second conduit,
a fourth conduit interconnecting said heater to said third conduit downstream of said first check valve,
a second check valve in said fourth conduit for passing water only from said heater to said fourth conduit,
a second solenoid valve connected to said first conduit between said third conduit and said heater,

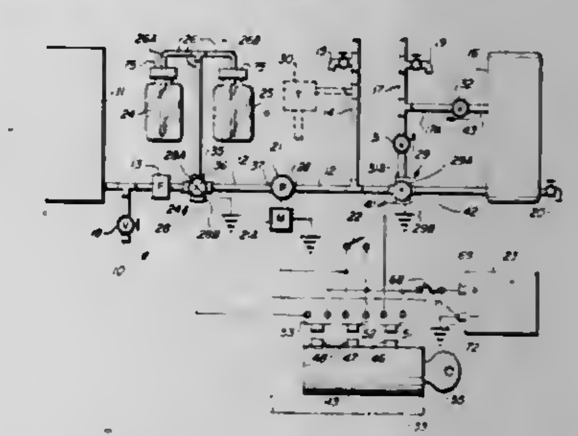

a fifth conduit connected to said first solenoid valve,
a source of anti-freeze connected to flow into said fifth conduit, and
switch means for selectively electrically energizing said pump means and said first and second solenoid valves to selectively open said second, third and fourth conduits to water from said supply or to close said second conduit to water from said supply and said heater from connection to said second conduit and to connect said first conduit through said first solenoid valve and at least a part of said second conduit to said third and fourth conduits,
said switch means comprising a key operated rotary drum having a plurality of cams mounted on its outer periphery for sequentially operating said pump means and said first and second solenoids.

4,298,022

ENERGY SAVER CONTROL FOR OUTDOOR WATER HEATER

William R. Walters, 910 W. Caddo, Cleveland, Okla. 74020

Filed Mar. 10, 1980, Ser. No. 128,466

Int. Cl.³ A01K *7/04*

U.S. Cl. 137—341 3 Claims

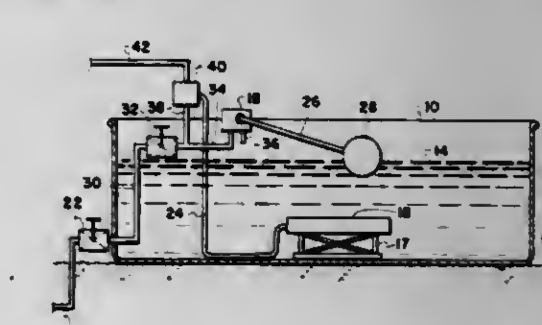

1. In an outdoor water heater system, comprising:
(a) an open tank, a pressurized source of water to fill said tank to a selected level, and a conventional type water level control means to maintain said selected level;
(b) a source of electrical power and electric heater means for

applying heat to the water in said tank to keep said water from freezing;

the improvement in energy saving means to control said electric heater means, comprising;

(c) water flow rate control means inserted between said water source and said water level control means, for reducing the rate of flow of water into said tank to a selected value when said water level control means is open;

(d) water pressure controlled electrical switch means connected in the water line between said water flow rate control means and said water level control means; said switch means adapted to apply electrical power to said heater means when the water pressure on said switch from said water line is above a selected first high value, and to cut off said electrical power to said heater means when the water pressure on said switch from said water line is less than a second low value;

whereby when said water level in said tank is less than said selected level, and said water level control means is open, water will flow into said tank at said selected flow rate, the pressure in said water line is low, and electrical power is cut off from said heater means; and when said water level is high, and said water level control means is closed, the pressure on said switch is high, and electrical power is applied to said heater means.

4,298,023
SPRING LOADED EXHALATION VALVE
Gerald E. McGinnis, 131 Kelvington Dr., Monroeville, Pa. 15146
Filed Sep. 9, 1980, Ser. No. 185,532
Int. Cl.³ F16K *15/06*
U.S. Cl. 137—529 **6 Claims**

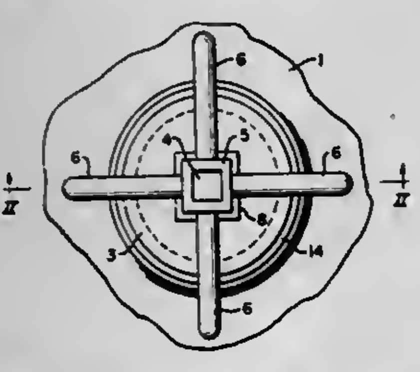

1. An exhalation valve for inhalation therapy, comprising a base member provided with an exhalation port encircled by a valve seat, a valve closure disc for said port, a pin connected to the center of said disc and extending outwardly away from the side of the disc remote from the port, a sleeve spaced from said disc and slidably receiving said pin, a support connecting the sleeve to said base member, at least two constant-force compression coil springs extending between said sleeve and disc, and means on said sleeve and disc for connecting the ends of the springs thereto, said springs being bowed outwardly away from said pin when said disc is seated on said valve seat and urging said disc toward the valve seat to close the valve, the springs exerting a substantially constant pressure against the disc as it is moved outwardly away from the valve seat by air flowing out through said port.

4,298,024
VALVE TIMER DEVICES
Jesse C. McLeod, 9930 Melissa Dr., Louisville, Ky. 40223
Filed Oct. 12, 1979, Ser. No. 84,088
Int. Cl.³ F16K *31/12*
U.S. Cl. 137—624.11 **4 Claims**

1. A pneumatic actuator and timing means to provide a selectively timed output control signal including base means having a first port communicating with a supply of pressurized fluid, first orifice means communicating with said first port, second orifice means communicating with said first port means, third orifice means communicating with said first orifice means, reservoir means consisting of at least two chambers connected by a passageway communicating with said third orifice means, fourth orifice means communicating with said reservoir means, signal output port means, fifth orifice means communicating with said signal output port means, bleed port means, sixth orifice means communicating with said bleed port means; further including valve means where said valve means includes a valve body defining a valve chamber adapted to receive a valve member longitudinally movable therein with bias means to urge said valve member from a second position within said valve chamber to a first position within said valve chamber and where said valve member includes first vane means defining a first chamber between said first vane means and one end of said valve body, second vane means in spaced relation from said first vane means defining second chamber within said valve body between said first and second vane means, third vane means located in spaced relation from second vane means to define a third chamber within said valve body between said second and third vane means, and a fourth

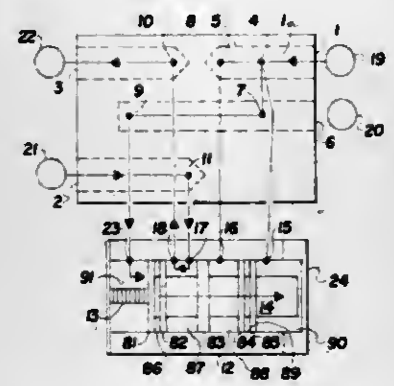

chamber within the valve body between said third vane means and a second end wall of said valve body where said valve body further includes first valve orifice means communicating with said first orifice means and said fourth chamber, second valve orifice means communicating with said second orifice means and said third chamber, third valve orifice means communicating with said fifth orifice means and said second chamber when said valve member is in said first position and with said third chamber when said valve member is in second position, fourth valve orifice means communicating with said sixth orifice means and said second chamber, fifth valve orifice means communicating with said fourth orifice means and said first chamber whereby said valve member is moved from said first position to said second position by selected pressure in said fourth chamber and where said fluid flows from said first port to said fourth chamber to move said valve member to said second position where said fluid flows to said signal output port and said first chamber until a selected pressure is achieved in said first chamber where said valve member returns to said first position to terminate said fluid flow to said signal output port.

4,298,025
CONTROL VALVE FOR WATER SOFTENERS
William C. Prior, Newbury, and Keith E. Brown, Solon, both of Ohio, assignors to Kinetico, Inc., Newbury, Ohio
Filed May 5, 1980, Ser. No. 146,218
Int. Cl.³ B01J *47/14*
U.S. Cl. 137—624.14 **10 Claims**

5. In a water softener control device including a housing enclosing a water usage monitoring means and a regeneration control means, the improvement comprising:

(a) a water turbine rotatably mounted within said control device in a path of discharged softened water;

(b) a water usage disc including perimetrically disposed ratchet teeth mounted for rotative movement in said housing, movement in said disc being in proportion to the amount of softened water discharge from the control device;

(c) a regeneration control disc mounted for rotation, coaxial with said water usage disc, said control disc controlling the sequence of water softener regeneration;

(d) a regeneration control turbine disposed within said housing in a path of metered fluid flow;

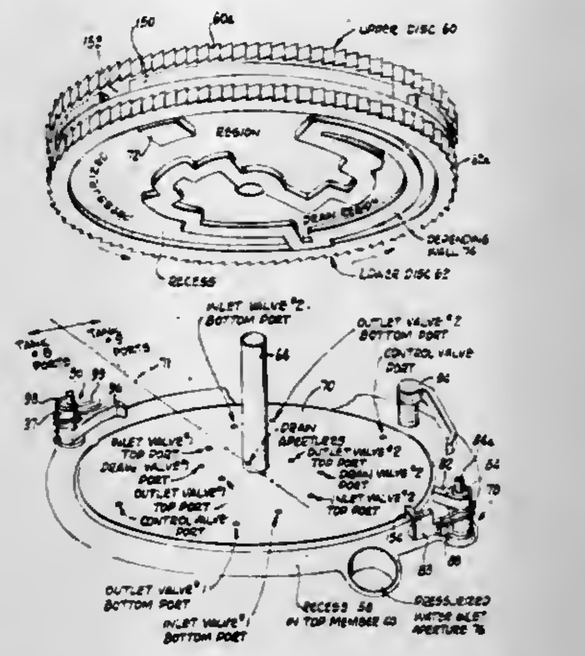

(e) a first indexing means operatively driven by said water usage turbine, said first indexing means being engageable with said ratchet teeth of the water usage disc and operative to incrementally rotate said disc after a predetermined number of turbine revolutions;

(f) a second indexing means driven by said regeneration control turbine and operative to incrementally rotate said control disc upon a predetermined number of revolutions of said regeneration turbine.

4,298,026
SPOOL VALVE
Paul J. Ambers, Westwood, Mass., assignor to Instrumentation Laboratory Inc., Lexington, Mass.
Filed Dec. 17, 1979, Ser. No. 104,296
Int. Cl.³ F16K *5/04*
U.S. Cl. 137—625.47 **10 Claims**

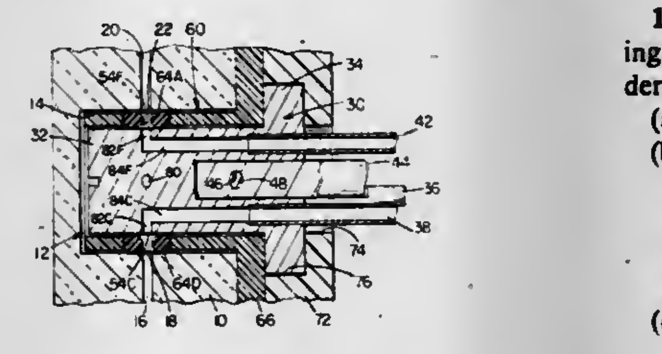

1. A valve comprising a housing member that has a recess, a body member disposed in said recess, said housing and body members including coaxial cylindrical valve surfaces in juxtaposed spaced relation, an array of at least three resilient support elements circumferentially spaced about said valve body between said juxtaposed spaced valve surfaces for centering said valve body in said housing recess, positioning means in said annular space between said housing and body valve surfaces fixing said resilient support elements in predetermined circumferential and axial positions between said two valve surfaces, a plurality of passages in said housing member, each said housing passage terminating in a port in said housing valve surface, a plurality of ports in said valve surface of said valve body arranged for selective alignment with said housing ports as said valve body member is rotated relative to said valve housing member, a plurality of separate passages in said valve body including a through passage connecting two of said valve body ports and a second passage separate from said through passage connecting a third of said valve body ports to a fourth port in said valve body, at least two of the resilient support elements being apertured and said positioning means locating said apertured support elements in alignment with ports on one of the juxtaposed members such that each said apertured support element conforms in sealing engagement between said juxtaposed cylindrical valve surfaces and functions as an annular valve seal member, said valve body being mounted for movement within said housing member between a first position in which said through passage connects first and second passages in said housing member and a second position in which said second body passage connects one of said ports in said housing member to said fourth port in said valve body member.

4,298,027
THREE-WAY NORMALLY CLOSED PILOT VALVE
James A. Neff, Bloomfield Township, Oakland County, Mich., assignor to Mac Valves, Inc., Wixom, Mich.
Filed Feb. 22, 1979, Ser. No. 14,245
Int. Cl.³ F15B *13/044*
U.S. Cl. 137—625.65 **2 Claims**

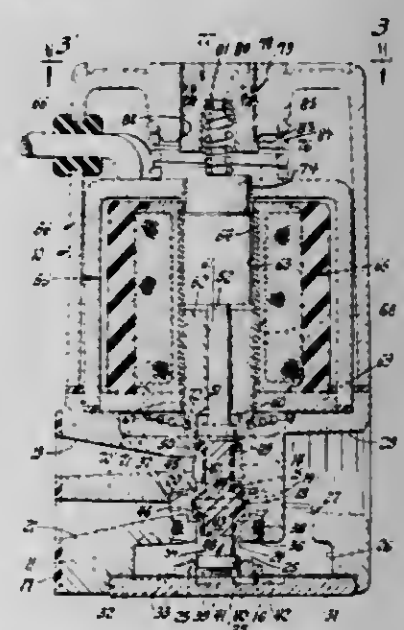

1. A three-way, normally closed only, pilot air valve including a valve body with a pressurized pilot air inlet port, a cylinder port, and an exhaust port, characterized in that:

(a) said valve body has a bore formed therethrough;

(b) a tubular valve retainer member, having an axial bore formed therethrough, is operatively mounted in one end of said valve body bore in a position between the cylinder port and the exhaust port, and it has a tubular side wall and an inner end and an outer end;

(c) a first passageway means is formed through the valve body and it interconnects said pressurized pilot air inlet port to the valve body bore at the other end thereof;

(d) a second passageway means if formed through the valve body and it extends laterally through the tubular side wall of the valve retainer member, adjacent the inner end thereof, and it interconnects said cylinder port with the axial bore in the valve retainer member;

(e) a third passageway means is formed through the valve body, and it extends laterally through the tubular side wall of the valve retainer member, adjacent the outer end thereof, and it interconnects said exhaust port with the axial bore in the valve retainer member;

(f) a first circular sharp edged poppet valve seat is formed in the valve body bore between the first passageway means and the second passageway means, and a second circular sharp edged poppet valve seat is formed in the axial bore

of the valve retainer member between the second passageway means and the third passageway means;

(g) a poppet spool valve is movably mounted in said valve body between a normally closed inoperative position and an open operative position, with a first portion thereof being slidably mounted in said valve body bore, and a second portion thereof being slidably mounted in the axial bore in the valve retainer member;

(h) said poppet spool valve is provided with a first conical annular valve member and a longitudinally spaced apart second conical annular valve member for sealing engagement with the first and second circular sharp edged poppet valve seats, respectively, so that when the poppet spool valve is in the inoperative position the first conical annular valve member is seated on the first circular sharp edged poppet valve seat and the poppet spool valve blocks the first passageway means from communication with the second passageway means through the valve body bore and the axial bore in the valve retainer while simultaneously the second conical annular valve member is unseated to open communication between the second and third passageway means through the valve body bore and the axial bore in the valve retainer member, to allow the air under pressure entering said cylinder port to be exhausted out said exhaust port, and when the poppet valve spool is in the operative position the second conical annular valve member is seated on the second circular sharp edged poppet valve seat and the poppet spool valve blocks the communication between the second and third passageway means and the first conical annular valve member is unseated to open communication between the first and second passageway means to allow pressurized pilot air to flow from the pilot air inlet port to the cylinder port;

(i) a solenoid operatively engaged with one end of said poppet spool valve for moving the poppet spool valve from an inoperative position to an operative position;

(j) the poppet spool valve is normally biased to the inoperative position by means which includes a return spring means engaged with the other end of the poppet spool valve;

(k) said poppet spool valve is provided at said other end with an enlarged diameter end which is mounted in the axial bore in the valve retainer with a close clearance and engaged on its outer end by said return spring means, and the third passageway means extends through the tubular side wall of the valve retainer member to communicate with the axial bore in the retainer member at a point between said enlarged diameter end and said second conical annular valve member, so that a substantially balanced condition is present between said enlarged diameter end of the poppet spool valve and the lower side of the second conical annular valve member during an exhausting flow of air under pressure from the second passageway means to the third passageway means;

(l) said means for normally biasing the poppet spool valve to the inoperative position also includes a fourth air passageway means in the valve that communicates the outer end of the axial bore in the retainer member, at a point outward of said poppet valve enlarged diameter end, with the third passageway means to allow air exhausting from the cylinder port to the exhaust port to leak past said enlarged diameter valve end and fourth passageway means to engage said other end of the poppet spool valve for assisting the return spring means in moving the poppet spool valve from the operative position to the inoperative position;

(m) said poppet spool valve is provided with only one dynamic seal; and,

(n) said first and second conical annular valve members are longitudinally spaced apart on the poppet spool valve and are disposed with their valve seat engaging faces converging toward each other, in a direction radially outward from the longitudinal axis of the poppet spool valve, so that the first and second conical annular valve members are angularly disposed when they engage their respective valve seats.

4,298,028

STARTING VALVE AND MOUNTING THEREFOR

Reinhard Fried, Nussbaumen; Andreas Mayer, Niederrohrdorf, and Ambrogio Perego, Wettingen, all of Switzerland, assignors to BBC Brown, Boveri & Company Limited, Baden, Switzerland

Filed Jan. 24, 1980, Ser. No. 115,131

Claims priority, application Switzerland, Feb. 1, 1979, 964/79

Int. Cl.³ F16K *11/14, 1/22*

U.S. Cl. 137—868 **22 Claims**

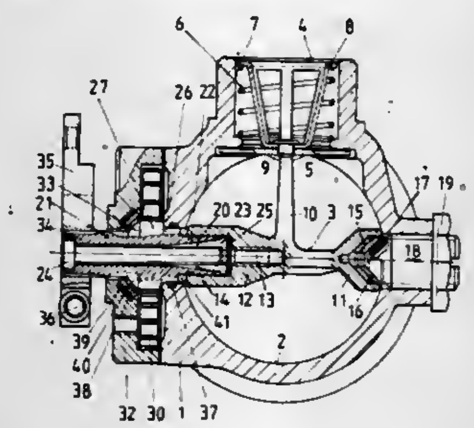

1. A mounting for a valve comprising:

a valve pivotable within a housing about an axis from a closed position to an open position;

first and second enlarged sections on the valve at first and second ends of the axis respectively;

the first enlarged section containing first resilient bearing means for allowing the valve to pivot and means for adjustably securing the first resilient bearing means; and

the second enlarged section containing means for non-rotatably mounting a valve shaft.

4,298,029

PRESSURE PULSE DAMPENER DEVICE

Abduz Zahid, Los Angeles, Calif., assignor to Greer Hydraulics, Incorporated, Chatsworth, Calif.

Filed Sep. 24, 1979, Ser. No. 78,014

Int. Cl.³ F16L *55/04*

U.S. Cl. 138—30 **4 Claims**

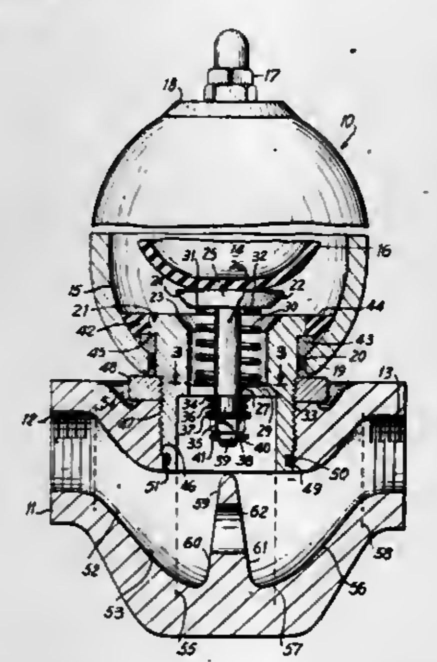

1. A pulse dampener device for hydraulic systems comprising a pressure vessel, a resilient, distensible bladder member disposed in said vessel and dividing said vessel into two discrete chambers, a gas charging port in communication with one said chamber, an oil port in communication with the other said chamber, a mounting fixture supporting said pressure vessel, said fixture including a conduit extending generally transversely to the axis of said vessel and including input and output fittings, said fixture including a passage extending downwardly from said oil port to said conduit in a direction generally axially of said vessel and having a downwardly directed entrance, a baffle member disposed in said conduit in transversely blocking position thereof, said baffle including a by-pass aperture directed substantially axially of said conduit, the cross sectional area of said aperture being less than the cross-sectional area of said conduit at said fittings, the upper end portion of said baffle being essentially coterminous with said entrance of said passage, said conduit progressively increasing in cross-sectional area in the direction from said fittings toward said baffle, the cross-sectional area of said conduit adjacent said baffle being at least about twice the cross-sectional area of said conduit at said input and output fittings, said conduit from said fittings to said baffle being inclined throughout in a downward direction generally away from said oil port.

4,298,030

ADJUSTABLE PULSE DAMPENER

Jacques H. Mercier, Paris, France, assignor to Normand Trust, New York, N.Y.

Continuation-in-part of Ser. No. 66,817, May 15, 1979. This application Mar. 31, 1980, Ser. No. 135,332

Int. Cl.³ F16L *55/00*

U.S. Cl. 138—30 **7 Claims**

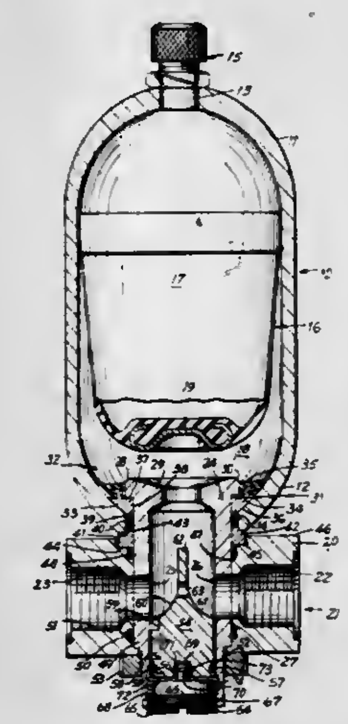

1. An adjustable pulse dampener device comprising, in combination, a pressure vessel having a gas charging port at one end and an oil port in the other end, a housing mounted on said other end of said vessel and including walls forming a through-going flow passage, fitting means at the terminal ends of said passage for connection to a conduit of a hydraulic circuit, a gas charging valve mounted in said gas port, a resilient expansible partition mounted in said vessel and dividing the same into two chambers in communication, respectively, with said oil port and said gas port, a hollow cylindrical sleeve member mounted in said housing and extending axially into said pressure vessel through said oil port, the upper end of said sleeve member defining a valve seat positioned to coact with said partition to open and close said oil port in accordance with the pressures within said chambers, said sleeve including a spaced pair of apertures extending transversely therethrough, said apertures being in coaxial alignment with each other and with said flow path, a baffle member mounted in said sleeve, said baffle member including portions disposed in said flow passage between said apertures in partial blocking relation of said path, and adjustment means interposed between said sleeve and said baffle member for shifting said baffle member axially of said sleeve into variable blocking positions of said flow path.

4,298,031

SHED FORMING DEVICE FOR LOOMS

Graziano Genini, Stabio, Switzerland, assignor to Albatex AG, Vaduz, Liechtenstein

Filed Aug. 9, 1979, Ser. No. 65,155

Claims priority, application Switzerland, Aug. 14, 1978, 8599/78

Int. Cl.³ D03C *1/12*

U.S. Cl. 139—55.1 **7 Claims**

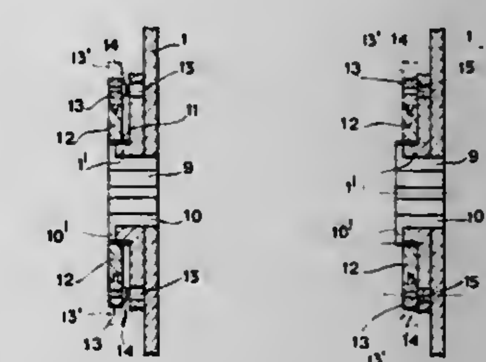

1. In a device for carrying out shed formation in looms, of the type having members operated by a common rotating drive shaft and linkages controlled by said members to move heald frames, and a clutch interposed between said drive shaft and each of said members selectively to release said member from rotation with the drive shaft, the improvement in which said clutch comprises a sleeve fast for rotation with the drive shaft, said member being mounted for rotation on said sleeve, said sleeve having a radially outwardly projecting end flange having at its outer periphery a splined profile, said member having an axially extending flange coaxial with and of the same outer diameter as said sleeve flange, said member flange having an identical splined profile on its outer periphery as said sleeve flange, a clutch ring having on its inner periphery a splined profile adapted to mate with and slide axially on said splined profiles of said flanges, and a drive ring mounted axially slidably but non-rotatably on said clutch ring for moving said clutch ring axially between a first position in which said clutch ring bridges over and interconnects said sleeve flange and said member flange for conjoint rotation with said drive shaft, and a second position in which said splined inner periphery of said clutch ring mates only with said splined outer periphery of said member flange thereby to permit rotation of said sleeve within and relative to said member, said drive ring in said second position of said clutch ring engaging said member to prevent rotation of said member.

4,298,032

SHUTTLE GRIP

Frank H. Kaufmann, and Charles F. Kramer, both of Greenville, S.C., assignors to Steel Heddle Manufacturing Co., Greenville, S.C.

Filed Sep. 7, 1978, Ser. No. 940,374

Int. Cl.³ D03J *5/16*

U.S. Cl. 139—207 **4 Claims**

1. An encapsulated shuttle grip for use in a shuttle for holding a bobbin in a properly aligned position during weaving, positioning rings carried on a butt end of said bobbin, said shuttle grip comprising:

a pair of opposed rigid steel leaves having:

(i) outer spaced apart steel gripping jaws for receiving a butt end of a bobbin,

(ii) inner shank portions, and

(iii) grooves provided on inner surfaces of said steel gripping jaws for receiving said rings of said bobbin,

a molded housing,
said inner shank portions being imbedded in said molded housing with said gripping jaw portions extending outwardly from said housing in a spaced apart relationship for receiving a bobbin head, said inner surfaces of said steel gripping jaws being free of said molded housing, and

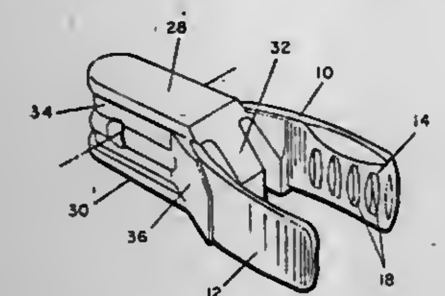

said molded housing extending on both sides of each leaf a sufficient distance toward said outer spaced apart steel jaws for positively and firmly holding said outer ends of said leaves in precise spaced apart relation maintaining the alignment of said leaves relative to each other as preset during molding said housing on said leaves.

4,298,033
WEFT TENSIONING DEVICE
Kihei Takahashi; Seiko Terada, both of Uozu, and Kiyoshi Nakada, Nyuzen, all of Japan, assignors to Yoshida Kogyo, K.K., Japan
Filed Jul. 17, 1979, Ser. No. 58,209
Claims priority, application Japan, Jul. 18, 1978, 53-87978
Int. Cl.³ D03D *47/34*
U.S. Cl. 139—450 **8 Claims**

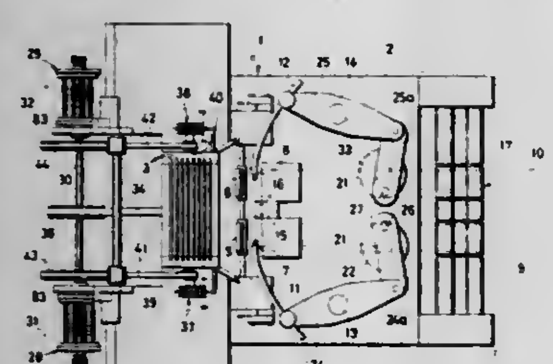

1. In a loom having a reciprocable filling carrier, a weft tensioning device comprising:
(a) a weft yarn feeder rotatable in synchronism with the reciprocation of the filling carrier for supplying a weft yarn to the filling carrier, said weft yarn feeder including weft winding means having a variable diameter for advancing the weft yarn at different rates at the same speed of rotation of the weft yarn feeder; and
(b) a tension compensator disposed between said weft yarn feeder and the filling carrier, said tension compensator including a pair of weft guides for carrying the weft yarn along a substantially straight path therebetween and slack takeup means disposed between said pair of weft guides and actuatable in synchronism with the operation of said weft yarn feeder for intermittently shifting sideways the weft yarn off said path, said slack takeup means comprising a pair of eccentric plate cams corotable in planes substantially perpendicular to said path in response to the rotation of said weft yarn feeder, said cams having portions movable across and retractable from said path in response to the rotation of said cams, and a yarn guide fixedly disposed between said cams for carrying the weft yarn in said path.

4,298,034
WEFT PRESENTING DEVICE FOR WEAVING LOOMS
Ettore Viscardi, Nembro, Italy, assignor to Somet Societa Meccanica Tessile S.p.A., Gazzaniga, Italy
Filed Jan. 31, 1980, Ser. No. 117,297
Claims priority, application Italy, Feb. 9, 1979, 20077 A/79
Int. Cl.³ D03D *47/38*
U.S. Cl. 139—453 **3 Claims**

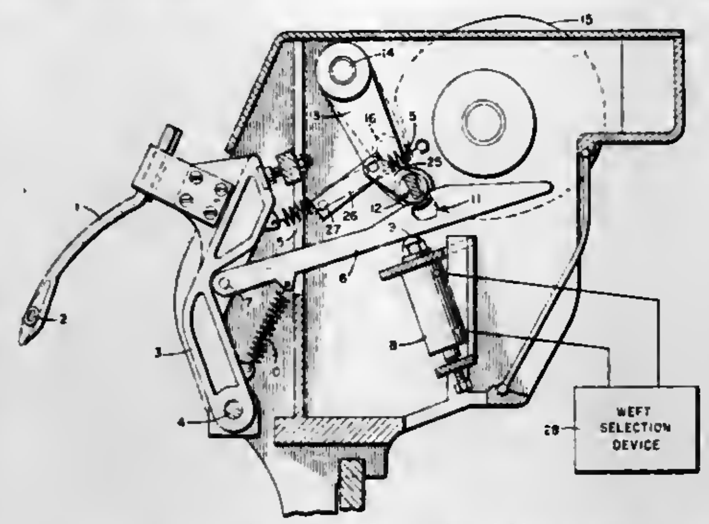

1. A device for presenting the weft in weaving looms, comprising a plurality of oscillating presenting rods having their free end in the form of an eyelet for the weft thread, a corresponding plurality of control levers for said rods, magnet means for causing the oscillation of said control levers and a transversal bar for the operaton thereof; engaging an approximate seat of those control levers being oscillated by said magnet means, characterized in that, the transversal operating bar has a flattened section with mixed-line contour, adapted to freely insert itself into the seat of the control levers of the device, said seat having a corresponding mixed-line contour section, and to respectively cooperate with said seat, depending on the reciprocal position between the transversal bar and the seats of the levers, and in that, said bar is fixed to an end of at least one guide lever which controls the position thereof during its movements and which is pivoted, at its outer end, to a connecting rod oscillating about a fixed point.

4,298,035
METHOD FOR MEASURING AND DISPENSING FRACTIONARY VOLUMES OF LIQUID SAMPLES
Miles G. Hossom, Hauppauge, N.Y., assignor to American Home Products Corporation, New York, N.Y.
Filed Oct. 11, 1979, Ser. No. 84,029
Int. Cl.³ B65B *3/04*
U.S. Cl. 141—1 **6 Claims**

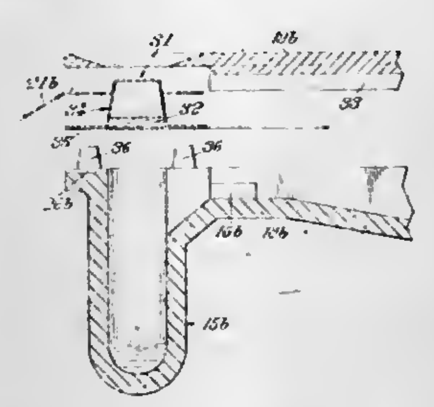

5. In a method for the identification of bacteria in a liquid sample by subjecting the liquid sample to a plurality of different test media comprising the steps of: providing a rotable casing defining an upwardly open central chamber concentric with the rotational axis of said casing, a plurality of radial pockets communicating at the inner ends thereof with said central chamber for gravity flow of liquid from said chamber into each of said pockets, the outer ends of said pockets communicating by means of a flow restriction with each of the

plurality of vented test cells formed in the rotatable casing, some at least of said cells containing a bacteria growing medium and growth indicator in lyophylised or other dried form,
filling said central chamber with said liquid sample until the pockets are filled up to said constrictions by gravity flow from said chamber,
inserting said closure means to isolate said predetermined volumes of liquid in said pockets,
rotating said casing about said axis to create centrifugal forces sufficient to overcome said capillary forces and to cause transfer of said volumes from said pockets into said test tubes,
incubating said bacteria for the predetermined time period, and optically determining the chemical change produced by the bacteria in each said cell,
the improvement which comprises facilitating a controlled flow of the liquid sample from the central chamber to said pockets by including in said liquid sample from about 0.3 to about 3.0% weight by volume of polyvinylpyrrolidone having an average molecular weight greater than about 40,000 and less than about 400,000.

4,298,036
DISPENSER FOR STICK SOLIDS
William Horvath, Watchung, N.J., assignor to Plastic Research Products, Inc., Warren, N.J.
Filed Dec. 13, 1979, Ser. No. 103,049
Int. Cl.³ B65B *3/04, 7/28*
U.S. Cl. 141—1 **19 Claims**

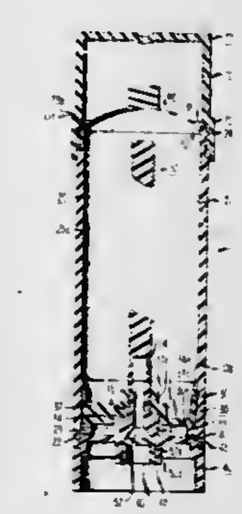

1. A device constructed to enclose and dispense solid or semi-solid stick product, comprising in combination:
a hollow cylindrical container having walls of substantially uniform diameter wherein the angle between the inner wall of said container and the principal axis of said container does not exceed about 0.2°, an open upper end for the dispensing of said product, and the base end of which is at least partially closed;
a slidable non-rotatable cup-shaped plunger mounted in the base end of said cylindrical container substantially concentric with the axis of said container and having an annular, upwardly projecting peripheral flange, said flange constructed and arranged to move in sealed slidable relation to the inner wall of said container and to form a vaportight seal against said wall for containing said product;
a removable cap attached to, and sealing against the upper end of said container above said product;
means for filling said container and said cup-shaped plunger with a molten or semi-molten product which assumes a solid or semi-solid form;
means cooperating with said plunger for progressively propelling said solid or semi-solid product axially toward said open upper end, wherein said projecting means comprises a mechanism for the upward vertical displacement of said plunger within said container.

4,298,037
METHOD OF SHIPPING AND USING SEMICONDUCTOR LIQUID SOURCE MATERIALS
John C. Schumacher, and Andre Lagendijk, both of Oceanside, Calif., assignors to J. C. Schumacher Co., Oceanside, Calif.
Continuation of Ser. No. 940,470, Sep. 8, 1978, abandoned, which is a division of Ser. No. 746,923, Dec. 2, 1976, abandoned. This application Feb. 22, 1980, Ser. No. 123,563
Int. Cl.³ B65B *3/00;* B65D *25/08*
U.S. Cl. 141—1 **8 Claims**

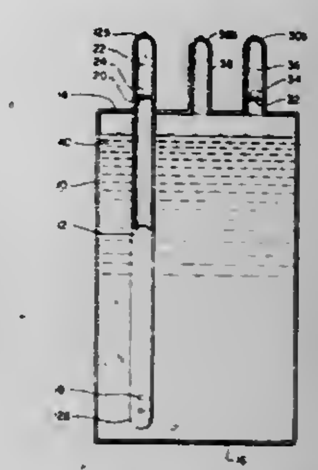

1. A method of packaging liquid for shipment which permits said liquid after receipt by a user, to be used in a manner which avoids exposure of said liquid to the atmosphere comprising:
positioning said liquid in a bubbler container having an inlet tube connected thereto which extends into the interior of the container and terminates near the bottom of the container, said tube having an opening in its lower end so that gas may be applied to the upper end of the tube and be allowed to escape out of the lower end of the tube and bubble through the liquid, said container further having an outlet tube connected to the upper end of the container;
forming an inner, easily breakable seal across each of said tubes which prevents leakage of said material; and
forming a second seal across each of said tubes spaced outwardly from said first seal, said outer seals meeting safety shipping regulations including providing a positive seal that prevents leakage and can withstand an internal pressure of 15 PSI gauge, to permit said double sealed container to be shipped to a user so that after the shipment reaches said user, the outer seals can be manually broken without breaking said inner seals, connections made to the tubes, the area of said tubes above said inner seals purged of atmosphere and said inner seals independently broken by suitable means not requiring access to the interior of the tubes.

4,298,038
TECHNIQUE AND DEVICE FOR MEASURING FLUIDS INCLUDING FINGER VALVE AND FILLER MECHANISM
J. Thomas Jennings, 5 Hickory Rd., Short Hills, N.J. 07078
Filed Sep. 21, 1979, Ser. No. 77,642
Int. Cl.³ G01F *11/26*
U.S. Cl. 141—2 **13 Claims**

1. In a device for measuring fluids dispensed from a primary container having an upwardly opening mouth for pouring out fluid when said container is rotated from its reference position in a vertical plane at least through its starting pour angle, the principal axis of said primary container being substantially vertical when said container is disposed in its reference position, said device comprising in combination a measuring vessel constructed to be secured adjacent to the mouth of said primary container for measuring and dispensing a measured amount of fluid poured out from said primary container, said measuring vessel having a cross-sectional shape in said vertical plane comprising an enlarged top portion and a constricted

base portion at the lower end of said measuring vessel adjacent the mouth of said primary container;

means connected to said mouth for providing a modified pour-spout for said primary container to increase the starting pour angle thereof, said means comprising a connecting tube connected in fluid-tight relation between said mouth at its lower end and the upper portion of said measuring vessel, said tube being externally spaced-apart from a lateral wall of said measuring vessel to form a handle;

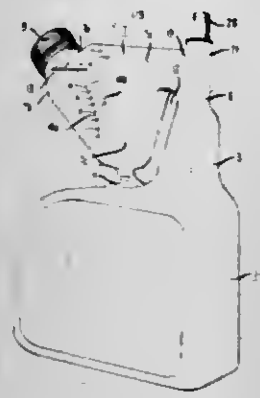

said measuring vessel closed at the top except for a first opening directed to the atmosphere adjacent the top end of said connecting tube, said first opening including a removable valve;

and a second opening directed to the atmosphere which is closeable by a conventional cap, comprising a dispensing spout of said measuring vessel disposed on the opposite side of the principal axis of said primary container from said first opening.

4,298,039

REVOLVING CONTAINER PROCESSING PLANT

Uwe Knabe, Dortmund; Siegmar Sindermann, Kamen-Heeren, and Heinrich Jordan, Dortmund, all of Fed. Rep. of Germany, assignors to Holstein and Kappert GmbH, Dortmund, Fed. Rep. of Germany

Filed Oct. 9, 1979, Ser. No. 82,625

Claims priority, application Fed. Rep. of Germany, Oct. 20, 1978, 2845646

Int. Cl.³ B65B *3/04;* **B67C** *7/00;* **B08B** *3/02*

U.S. Cl. 141—90 **13 Claims**

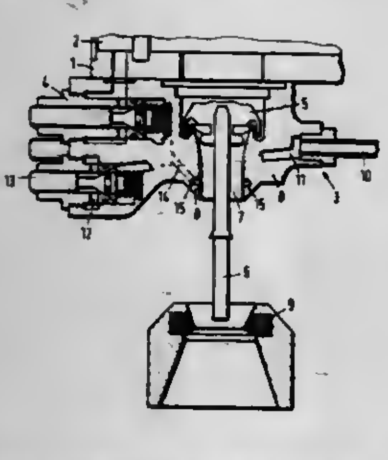

2. A revolving container processing plant comprising a tank for holding liquid to be filled into containers, said tank being mounted for rotational movement and having a vacuum channel communicating therewith, a plurality of filling valves arranged on said tank for filling containers with said liquid and at least one liquid feeder passageway for communicating said liquid from said tank to said filling valves, each of said filling valves including a valve body having a liquid outlet opening for passing said liquid into the containers and at least one spray passageway in said valve body for directing a liquid spray from inside said valve body into said liquid outlet opening so that the liquid spray contacts at least liquid carrying parts of said filling valve to remove container fragments therefrom, and an interconnecting valve coupled between said vacuum channel and said spray passageway for transmitting liquid in said channel to said spray passageway in response to breakage of a container wherein said vacuum channel operates to accumulate liquid to be supplied to said spray passageway.

4,298,040

FILL DEVICE

Kurt Pohan, Freigericht, Fed. Rep. of Germany, assignor to Leybold-Heraeus GmbH, Cologne, Fed. Rep. of Germany

Filed Nov. 8, 1979, Ser. No. 92,926

Claims priority, application Fed. Rep. of Germany, Nov. 8, 1978, 2848436

Int. Cl.³ B65B *3/02*

U.S. Cl. 141—115 **11 Claims**

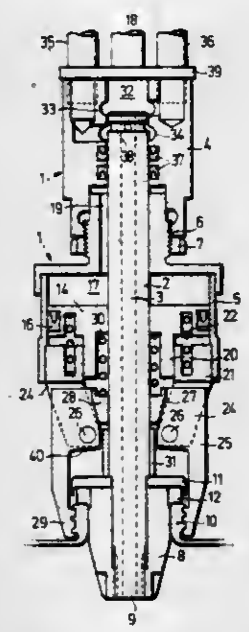

1. A fill device for filling a system, via a fill pipe thereof, with a liquid to a selected fill level, at least one liquid supply line and one extraction line being connected to said device and said device comprising: a housing; a rod axially displaceably mounted in said housing with one end of said rod forming a liquid outlet opening arranged to extend into the fill pipe to the selected fill level; flow control means connected between said outlet opening and the supply and extraction lines and operable to connect a selected one of those lines to said outlet opening; clamping means mounted in the region of said outlet opening and operable to clamp said device onto the fill pipe; and operating means operatively associated with said rod, said flow control means and said clamping means for causing displacement of said rod relative to said housing to simultaneously control operation of said flow control means and clamping means.

4,298,041

APPARATUS FOR DISPENSING FILM-LIKE LIQUID INTO VERTICAL PIPES

Vincenzo Lagana', and Riccardo Pasero, both of Milan, Italy, assignors to Snamprogetti S.p.A., Milan, Italy

Filed Nov. 27, 1979, Ser. No. 97,786

Claims priority, application Italy, Dec. 15, 1978, 30886 A/78

Int. Cl.³ B65B *3/06*

U.S. Cl. 141—392 **7 Claims**

1. A distributor for causing liquid to be conveyed in the form of a film on the inner walls of essentially vertical tubes open at their top ends to an accumulator containing the liquid to be distributed and open at their bottom ends to a receiver for the distributed liquid, comprising:

cylindrical members slidably insertable in the upper ends of the tubes, wherein each of said members includes:

a ledge at its upper end which abuts the upper end of the

tube to limit the insertion of said member to the upper end thereof,

helical grooves in the outer surface of said member which extend from the top of said ledge to the bottom of said member and which are open to the inner wall of the tube therebetween for receiving the liquid from the accumulator and conveying such liquid within and along the length

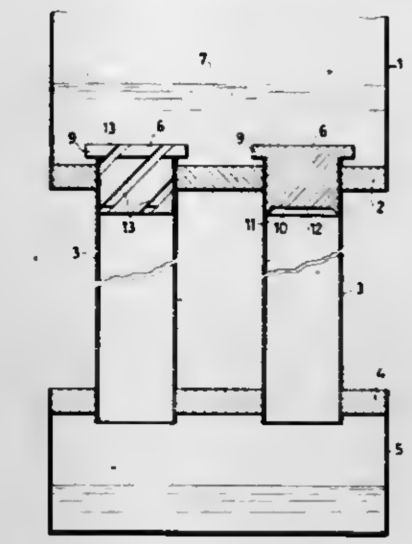

of said helical grooves and from the lower ends thereof onto the inner tube wall, and

a convex circular rim at the lower end of said member which directs the flow of the liquid from said grooves outwardly onto the inner tube wall where it forms a film of liquid thereon and flows downwardly along its length into the receiver.

4,298,042

ROTARY DELIMBER FOR TIMBER HARVESTER

Waino Peltola, Rte. 1, Tripoli, Wis. 54564

Filed Sep. 6, 1979, Ser. No. 72,880

Int. Cl.³ B27L *1/00*

U.S. Cl. 144—2 Z **6 Claims**

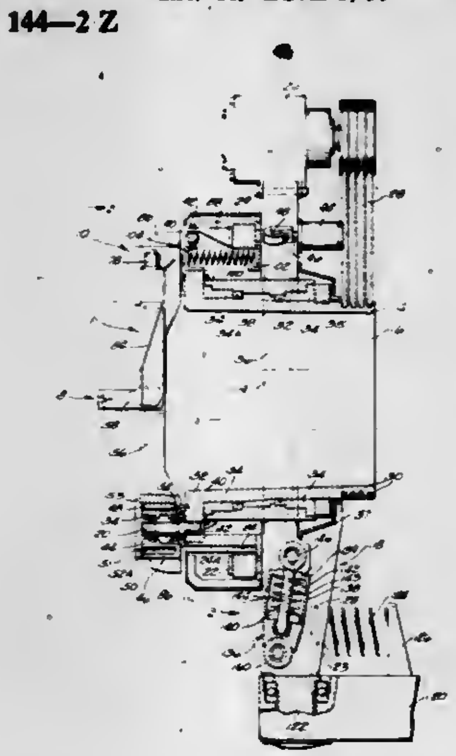

1. Apparatus for delimbing trees comprising a rotor having an axial throat adapted to receive the trunk of a tree, a cutter, and means for supporting said cutter on said rotor to yieldably afford displacement of said cutter about first and second axes, and wherein said means for supporting said cutter on said rotor to yieldably afford displacement about a first axis includes a cutter arm, means for rotatably connecting said cutter arm to said rotor, and a torsion spring for yieldably biasing said cutter arm inwardly toward the axis of said rotor, and wherein said means for supporting said cutter on said rotor to yieldably afford displacement about a second axis comprises a spindle connected to said cutter, and means for rotatably supporting said spindle on said cutter arm, a torsion bar on said cutter arm, one end of said torsion bar being connected to said cutter arm and the other end being connected to said spindle.

4,298,043

LOG TRANSPORT SYSTEM

David E. Seffens, Monroe, La., assignor to H. Jack Flanders Co., Little Rock, Ark.

Filed Apr. 28, 1980, Ser. No. 144,233

Int. Cl.³ B27B *31/00*

U.S. Cl. 144—136 R **7 Claims**

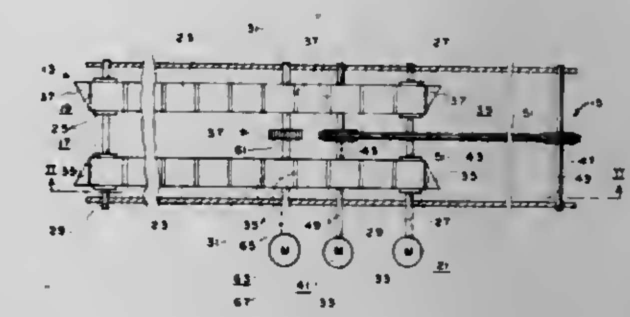

1. A transport system for transporting an object, said system comprising:

(a) first conveyor means for transporting the object, said first conveyor means including first and second conveyor members, said first and second conveyor members being arranged side-by-side a spaced apart distance, said first conveyor means including drive means for synchronously driving said first and second conveyor members;

(b) means for forming a transport surface in the object as the object is transported by said first conveyor means; and

(c) second conveyor means for transporting the object, said second conveyor means including a conveyor member for engaging the transport surface in said object and including drive means for driving said conveyor member, a portion of said conveyor member of said second conveyor means extending between said first and second conveyor members of said first conveyor means for positively supporting the object as it is transported between said first and second conveyor means.

4,298,044

WOOD CHIPPER

Sydney Hansel, Arlington, Wash., and Thomas N. Baker, Thiensville, Wis., assignors to The Filer and Stowell Company, Milwaukee, Wis.

Filed Jan. 21, 1980, Ser. No. 113,517

Int. Cl.³ B27C *7/10*

U.S. Cl. 144—176 **7 Claims**

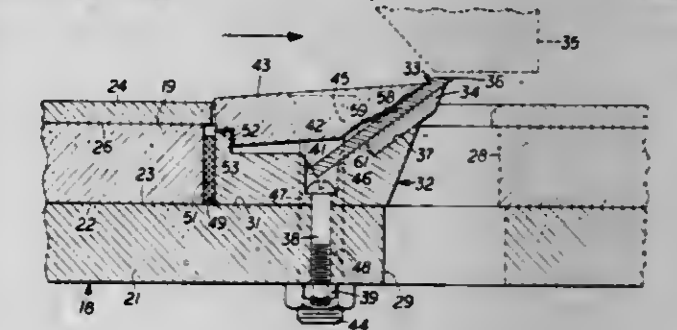

1. A wood chipper comprising,

(a) a drive shaft mounted for rotation in a supporting housing,

(b) a disc unit having a pair of adjacent disc elements mounted on said drive shaft for rotation therewith the

inner surface of one said disc element in face-to-face relationship with the inner surface of the other said disc element,
(c) means securing said one disc element to said other disc element,
(d) angularly spaced aligned passageways through said one disc element and said other disc element,
(e) there being a recess in said one disc element at the trailing side of each angularly spaced passageway therethrough as viewed in the direction of rotation of said disc unit,
(f) a knife holder mounted within each said recess in said one disc element with the end of said knife holder removed from said aligned passageways being spaced from said one disc element to define means therebetween for receiving a babbit-like metal that accurately locates said knife holder and limits movement thereof,
(g) means securing said knife holder to said other disc element,
(h) a knife carried by each said knife holder adjacent said aligned passageways with the edge of said knife opposite its cutting edge engaging an abutment carried by said knife holder so that said knife holder takes the thrust of said knife,
(i) a knife clamp at the opposite side of said knife from said knife holder,
(j) means connecting said knife clamp to said knife holder to secure said knife therebetween,
(k) interlocking means carried by said knife clamp and said knife holder engaging each other and limiting relative movement therebetween both axially and radially to maintain accuracy of the knives relative to each other in all directions, and
(l) means to feed wood to one side of said disc unit so that the wood is cut into chips which pass through said aligned passageways to the other side of said disc unit.

4,298,045
DISPENSING CONTAINER WITH PLURAL REMOVABLE CLOSURE MEANS UNITARY THEREWITH
Gerhard H. Weiler, South Barrington, and Henry Komendowski, Des Plaines, both of Ill., assignors to Automatic Liquid Packaging, Inc., Arlington Heights, Ill.
Division of Ser. No. 896,978, Apr. 17, 1978, Pat. No. 4,239,726. This application Feb. 1, 1980, Ser. No. 117,455
Int. Cl.³ B65D *30/00;* **A45C** *00/00*
U.S. Cl. 150—0.5 **5 Claims**

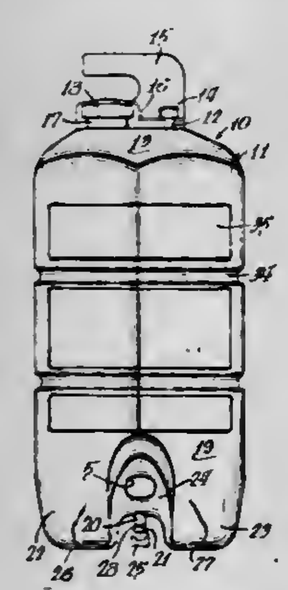

1. A unitary, hermetically-sealed dispensing container, suitable for containing a sterile solution, which comprises
a hollow, generally tubular body of thermoplastic material closed at both ends, defining an enclosure having first and second access apertures and provided at one of said ends with a first hollow stem means having a bore of predetermined configuration and surrounding the first access aperture and at the other of said ends with a second hollow stem means having a predetermined outer side surface configuration and surrounding the second access aperture, the end provided with said second access aperture being bifurcated so as to define a pair of pockets;
a unitary sleeve member bridging said pockets and defining a confined flow passageway therebetween, said second hollow stem means communicating with said confined flow passageway, said first and second hollow stem means being unitary with said tubular body;
a first removable closure means for sealing said first access aperture and unitary with said first hollow stem means; and
a second removable closure means for sealing said second access aperture and unitary with said generally tubular body.

4,298,046
WINTER TIRE
Yves Herbelleau, Gourbeyre, and Charles Flechtner, Clermont-Ferrand, both of France, assignors to Compagnie Generale des Etablissements Michelin, Clermont-Ferrand, France
Continuation-in-part of Ser. No. 18,850, Mar. 8, 1979, abandoned. This application Jul. 9, 1980, Ser. No. 167,068
Claims priority, application France, Jul. 24, 1979, 79 19253
Int. Cl.³ B60C *11/12*
U.S. Cl. 152—209 R **7 Claims**

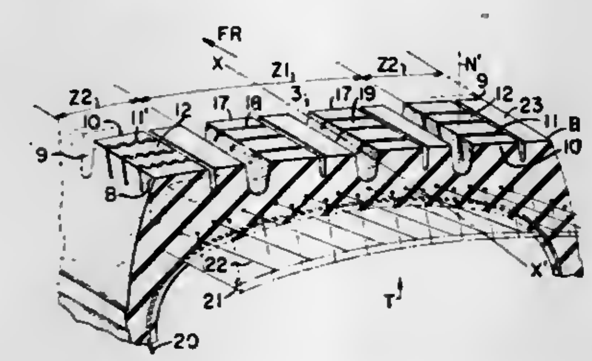

1. A tire intended for winter travel, having a tread comprising relief elements bounded by grooves and provided with consecutive slits inclined with respect to the outer normal to the tread which are close to each other and form strips between each other, characterized by the fact that
(a) the slits are located in the central zone of the tread width and in the two lateral zones of the tread width;
(b) the depth of the slits is about equal to the depth of the grooves;
(c) when the tire is not under load, the slits which are located in the central zone are inclined with respect to said normal by an angle at most equal to 45° in the direction opposite the direction of forward rotation of the tire so as to be active in braking and the slits which are located in the two lateral zones are inclined with respect to said normal by an angle at most equal to 45° in the direction of forward rotation of the tire so as to be active in longitudinal acceleration;
(d) the slits have a width which is other than zero and such that, when the tire is under load and and crushed on the ground, the slits are closed; and
(e) the tread comprises a radial carcass reinforcement surrounded by a tread reinforcement.

4,298,047
BALLASTING AND INFLATION APPARATUS
Emile Bobard, Beaune, France, assignor to Bobard Jeune, S.A., Beaune, France, a part interest
Filed Feb. 11, 1980, Ser. No. 120,326
Claims priority, application France, Feb. 12, 1979, 79 03687
Int. Cl.³ B60C *23/10, 29/00*
U.S. Cl. 152—417 **13 Claims**

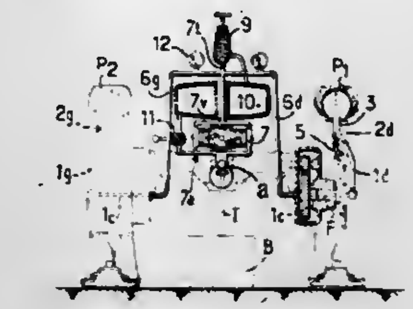

1. Apparatus for use with a vehicle having tires, said apparatus adapted to adjust the pressure of fluid within said tires when said tires are inflated with said fluid in the form of air, ballasting liquid, or a combination thereof, both when said vehicle is at rest and when said vehicle is moving, said apparatus comprising:
(a) a pump adapted to compress liquid or air to a predetermined inflation pressure;
(b) a discharge valve adapted to adjust said predetermined inflation pressure;
(c) a reservoir adapted to receive and store said liquid;
(d) a nozzle associated with each of said tires, each nozzle comprising a fluid feed passageway and a fluid purge passageway; each nozzle adapted to occupy a first, generally upright position in which said nozzle is capable of purging up to 100% of air present in said tire and a second, generally downwardly directed position in which said nozzle is capable of purging up to 100% of liquid present in said tire; and
(e) a piping system interconnecting said pump to said nozzles, said reservoir, and said valve.

4,298,048
ROLL-UP DIVIDER
Max F. Roller, 7230 N. Keystone, Lincolnwood, Ill.
Filed Mar. 23, 1977, Ser. No. 780,529
Int. Cl.³ A47G *5/02;* **E06B** *9/204*
U.S. Cl. 160—243 **3 Claims**

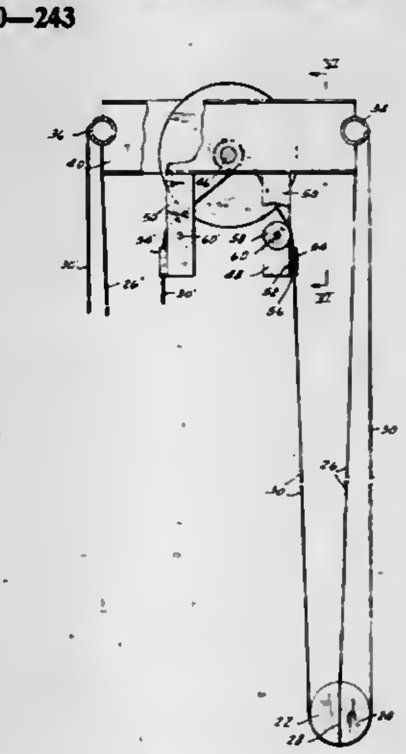

1. A roll up divider comprising:
a flexible curtain having top and bottom marginal edges;
a cylindrical member attached to the bottom marginal edge for winding and unwinding said curtain;
a web embracing said cylindrical member with curtain material, when wound thereon, intermediate said web and said cylindrical member;
support means fixedly supporting one end of said web and said top marginal edge of said curtain at an overhead location;
a rotatably mounted shaft spaced from said top marginal edge at another overhead location, the other end of said web attached to said shaft;
drive means connected to said shaft and operable to rotate said shaft in either direction to wind said web thereon and unwind said web therefrom to cause a corresponding winding of said curtain about said cylindrical member and unwinding of said curtain from said cylindrical member; and
a fair lead for contacting and guiding said web so that said web is prevented from wandering and winds upon itself, said fair lead comprising a roller spaced from said shaft and parallel thereto for rollingly engaging and supporting said web, and a pair of other rollers mounted parallel to each other to engage and guide the edges of said web.

4,298,049
METHOD FOR ASSEMBLING MOLDS
Gary D. Counselor; Robert C. Gerst, and Reginald A. Pennington, all of Muskegon, Mich., assignors to Westran Corporation, Muskegon, Mich.
Filed Aug. 17, 1979, Ser. No. 67,378
Int. Cl.³ B22C *9/10, 9/24*
U.S. Cl. 164—30 **6 Claims**

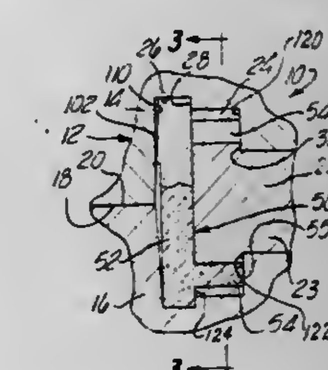

1. A method for assembling molds comprising: providing a mold comprising a cope and a drag, said cope and said drag having mating surfaces which abut together and define a casting cavity between the cope and the drag; providing a core carried by said cope and said drag and positioned within said cavity,
said core including at least one elongated protrusion extending into said cavity in a direction substantially parallel to the mating surfaces of said cope and said drag whereby said protrusion forms an opening in the casting with an axis extending in a direction substantially parallel to the mating surfaces of said cope and said drag, providing said cope and said drag with end surfaces defining portions of said cavity and extending substantially normal to said mating surfaces,
providing said drag with casting cavity surfaces defining a locator corner against which an edge of said core is adapted to abut,
providing a cam surface on said core, positioning said core in said drag such that an edge of said core abuts said locator corner and such that said core is in a position displaced from a proper position for casting, and engaging said cam surface with an end surface by moving said mating surfaces into mating relation to pivot said core about said locator corner thereby moving said core from said displaced position to said casting position whereby the longitudinal axis of said protrusion is substantially parallel to

the mating surfaces of said cope and said drag to thereby properly position a hole to be formed in said casting.

4,298,050

PROCESS FOR CONTINUOUS CASTING OF A SLIGHTLY DEOXIDIZED STEEL SLAB

Tetsro Ohashi; Osamu Kitamura; Hiromu Fujii; Seizo Mineyuki, and Eiichi Takeuchi, all of Himeji, Japan, assignors to Nippon Steel Corporation, Tokyo, Japan

Filed Nov. 6, 1979, Ser. No. 91,813

Claims priority, application Japan, Nov. 6, 1978, 53/135776; Sep. 10, 1979, 54/116030

Int. Cl.³ B22D *27/02, 11/00*

U.S. Cl. 164—468 11 Claims

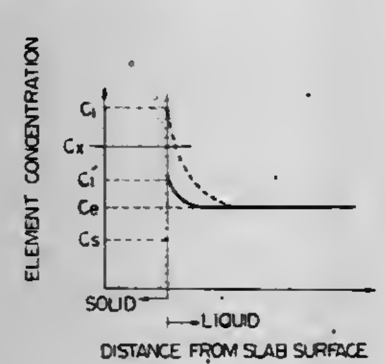

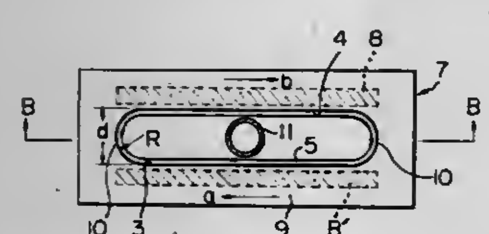

1. A process for the continuous casting of a slab of slightly deoxidized steel, using a continuous casting powder and an immersion nozzle which is immersed into molten steel within a mold having two short sides and two long sides, which process comprises the steps of:
casting into said mold molten steel having a concentration of free oxygen in the range of from 50 to 200 ppm,
providing the inner surface of both short sides of said mold with a concave shape, as viewed in a horizontal cross section of said short sides,
locating a device for generating an electromagnetic force at each of both long sides of said mold and above an outlet port of said immersion nozzle,
orienting the propulsion force of said device for generating the electromagnetic force in directions along said long sides opposite to one another,
energizing said device for generating a flow of said molten steel having an essentially constant flow speed, said flow horizontally rotating entirely around a solidification interface and in the proximity thereof, said solidification interface being the interface between a solidification layer of the steel and said molten steel, said flow being formed from the position of the molten steel surface within the mold to the proximity of a predetermined vertical position on said solidification interface where the thickness of said solidification layer is greater than the amount of scale off, and
providing said horizontal flow with a flow speed in the range of from 0.1 to 1.0 m/sec.

4,298,051

METHOD OF DIE CASTING UTILIZING EXPENDABLE SAND CORES

Enno H. Page, Toledo, Ohio, assignor to NL Industries, Inc., New York, N.Y.

Continuation-in-part of Ser. No. 909,468, May 25, 1978, abandoned. This application Sep. 25, 1979, Ser. No. 78,794

Int. Cl.³ B22C *3/00, 9/10;* **B22D** *17/20*

U.S. Cl. 164—72 7 Claims

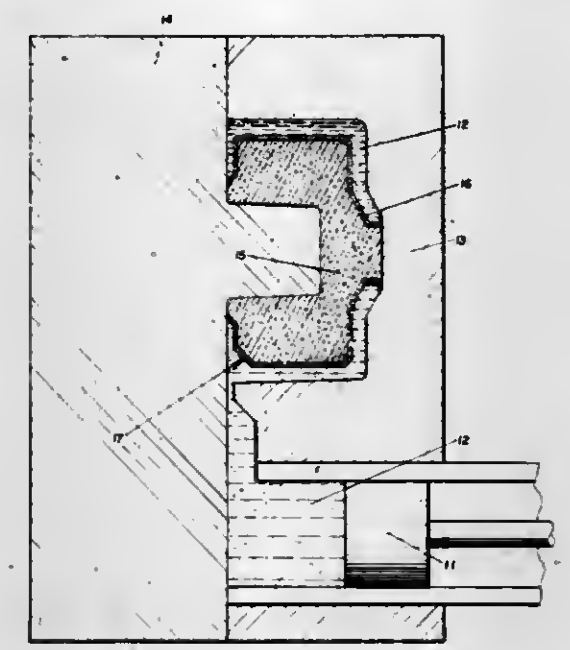

1. A method for forming a die casting having an undercut region from molten metal, comprising: injecting molten metal into a die casting mold having a casting surface that includes at least one expendable sand core that forms an undercut region on said die casting, said core consisting essentially of from about 0.3% to 3.5% by weight of foundry sand of a binder consisting essentially of a boronated aluminum phosphate containing boron in an amount from about 3 mole % to about 40 mole % based upon the moles of aluminum and containing a mole ratio of phosphorous to total moles of aluminum and boron of about 2:1 to about 4:1, an effective amount of a hardening agent to react with the aluminum phosphate and to harden said binder to the extent that said core can be handled without damage and; water in an amount from 15% to 50% by weight based upon the total weight of boronated aluminum phosphate and water; balance essentially foundry sand; permitting said injected molten metal to solidify along said casting surface to form a die casting; removing said die casting from said mold; and separating said die casting from said core.

4,298,052

CONTINUOUS CASTING INSTALLATION CONTAINING OPEN-ENDED MOLD

Bernhard Knell, Thalwil, and Adalbert Röhrig, Wädenswil, both of Switzerland, assignors to Concast AG, Zürich, Switzerland

Filed Oct. 11, 1979, Ser. No. 83,980

Claims priority, application Switzerland, Oct. 27, 1978, 11114/78

Int. Cl.³ B22D *11/04, 11/12*

U.S. Cl. 164—416 6 Claims

1. A continuous casting installation for casting molten steel to form a continuously cast strand moving in a predetermined direction of travel, comprising:
an oscillating continuous casting mold;
at least a partially curved support guide arrangement following the mold in the casting direction for supporting a partially solidified strand;
said support guide arrangement being divided into a first support structure directly beneath the mold and a subsequent support structure being further divided into exchangeable upper and lower segments;

a support frame carrying said mold and said first support structure of said support guide arrangement;
a machine base frame having an upper portion, said upper portion carrying a plurality of said exchangeable upper segments;
said machine base frame carrying a plurality of said exchangeable lower segments;
said support frame, said upper portion of said machine base frame and said machine base frame each being supported at a common location for independent movement relative to each other;

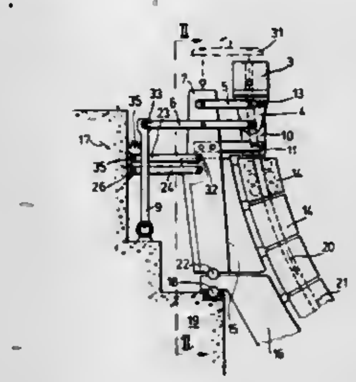

said support frame and said upper portion of said machine base frame being separately supported by a common foundation at about the same height, said upper portion of said machine base frame extending along a portion of the length of said support frame; and
said upper portion of said machine base frame and said support frame being movably supported by said foundation so that independent heat expansion of each of said frames in the direction of strand travel is allowed.

4,298,053

CASTING BELTS FOR MACHINES FOR THE CONTINUOUS CASTING OF METALS

John Dompas, Olen, Belgium, and Charles J. Petry, Winooski, Vt., assignors to Metallurgie Hoboken-Overpelt, Brussels, Belgium

Filed Mar. 7, 1975, Ser. No. 556,370

Claims priority, application France, Mar. 18, 1974, 74 09061

Int. Cl.³ B22D *11/06;* **B23K** *28/00*

U.S. Cl. 164—429 2 Claims

1. An endless casting belt for use on a machine for the continuous casting of metals, said endless belt consisting essentially of a belt of mild killed steel containing 0.2 to 0.8% by weight of titanium, said belt having been welded together at its ends in a "welding zone" to form an endless belt, an 0.05 mm thick primer layer of an 80:20 nickel-aluminum alloy overlying said welding zone, a first coating between 0.01 and 0.5 mm thick covering said primer layer, said first coating being selected from the group consisting of chromium, chromium alloy, nickel, nickel alloy and stainless steel, and a second coating of colloidal graphite covering said first coating.

4,298,054

METHOD OF WITHDRAWING A MOBILE SENSOR FROM A HEAT EXCHANGER

Andrev Adamowski, Paris, France, assignor to Intercontrole S.A., Rungis, France

Filed Jan. 25, 1980, Ser. No. 115,240

Claims priority, application France, Feb. 5, 1979, 79 03408

Int. Cl.³ F28F *11/00*

U.S. Cl. 165—1 8 Claims

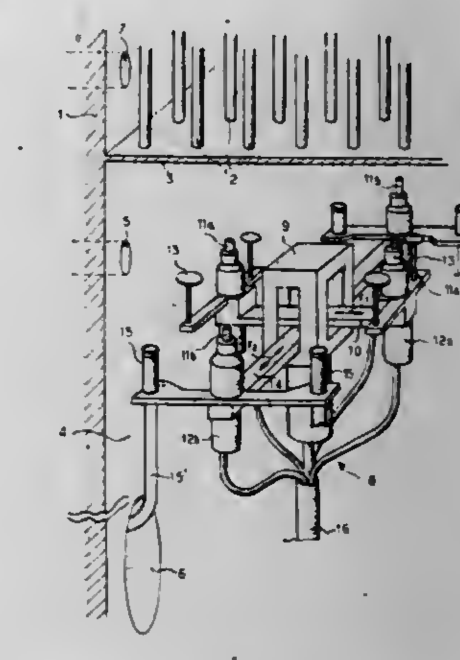

1. A method for withdrawing a mobile sensor apparatus from a header of a tubular heat-exchanger, the heat-exchanger having a closable access opening and the sensor apparatus having expansible mandrels by which the apparatus can be secured to tubes of the heat-exchanger and at least one guide tube by which a sensor can be introduced into a tube of the heat-exchanger to be inspected, said method comprising the steps of
introducing into one said guide tube and a tube of the heat-exchanger aligned therewith a dummy sensor mounted on a slightly flexible tube and carrying means by which it can be temporarily fixed within the heat-exchanger tube,
fixing the dummy sensor within the said heat-exchanger tube,
releasing the expansible mandrels of the sensor apparatus, and
sliding the apparatus along the tube of the dummy sensor to the access opening.

4,298,055

ACTUATED SECTOR PLATE

Kent E. Ritter, Wellsville, N.Y., assignor to The Air Preheater Company, Inc., Wellsville, N.Y.

Filed Aug. 27, 1980, Ser. No. 181,594

Int. Cl.³ F28D *19/00*

U.S. Cl. 165—9 7 Claims

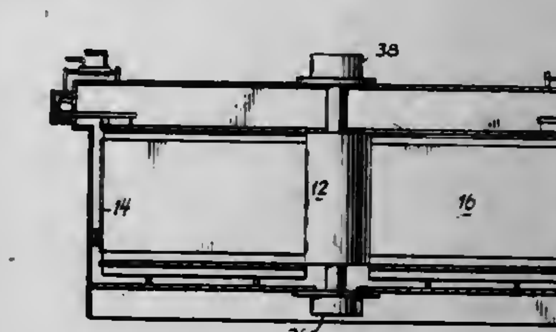

1. Rotary regenerative heat exchange apparatus having a rotor including a central rotor post and a concentric rotor shell spaced therefrom to provide an annular space therebetween, a mass of heat absorbent material carried in the annular space

between the rotor post and the rotor shell, a housing surrounding the rotor in spaced relation including inlet and outlet ducts at opposite ends thereof for a heating fluid and for a fluid to be heated, bearing means at opposite ends of the rotor adapted to support the rotor for rotation about its axis, means for rotating the rotor about its axis, a resilient sector plate intermediate the end of the rotor and the rotor housing adapted to maintain the heating fluid separate from the fluid to be heated, support means that holds the inboard end of the sector plate adjacent the inboard end of the rotor, a toggle type linkage at the outboard end of the rotor for moving the sector plate axially to conform to the configuration of the rotor, said linkage including a bell crank having an upper arm and a lower arm, fixed pivot means at the apex of the upper and lower arms of the bell crank connecting the bell crank to the rotor housing, an elongate link having one end thereof pivotally attached to the sector plate and the other end thereof pivotally attached to the lower arm of the bell crank, and actuating means for moving the upper arm of the bell crank about the fixed point whereby the angle formed by the lower arm of the bell crank and the linkage member may be increased to produce a vertical force component that effectively moves the sector plate vertically toward the adjacent face of the rotor.

4,298,056
HEAT PUMP SETBACK TEMPERATURE CONTROL WITH COLD WEATHER OVERRIDE
Lorne W. Nelson, Bloomington, Minn., assignor to Honeywell Inc., Minneapolis, Minn.
Filed Jan. 21, 1980, Ser. No. 114,028
Int. Cl.³ F25B *29/00*
U.S. Cl. 165—12 **5 Claims**

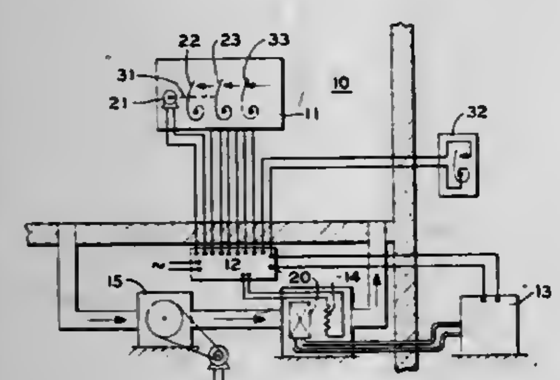

1. An improvement in a multistage setback time controlled thermostat control system for maintaining a normal temperature and during selected time periods a reduced temperature in a space wherein a first stage is adapted to control a refrigeration heat pump for furnishing heat to the space from the outside air and at least a second stage is adapted to control an auxiliary heating source for furnishing heat to the space, the improvement comprising,
an outdoor temperature responsive means adapted to be connected to said control system to maintain the refrigeration heat pump operative when the outdoor temperature is below a predetermined value independent of said first stage whereby the refrigeration heat pump is not allowed to stand inoperative at low outdoor temperatures.

4,298,057
TUBULAR HEAT-EXCHANGER
Yngve R. Kihlberg, Akarp, and Johan E. P. Sjöholm, Bjärred, both of Sweden, assignors to Kommanditbolaget United Stirling AB & CO, Malmo, Sweden
Filed Apr. 6, 1979, Ser. No. 27,809
Int. Cl.³ F28F *9/22, 7/10*
U.S. Cl. 165—159 **6 Claims**

1. In a tubular heat-exchanger of the kind having a plurality of parallel tubes through which a first fluid flows and which are disposed within walls defining a space or chamber through which a second fluid flows around the tubes and generally in directions substantially perpendicular or transverse to the tubes, the improvement comprising the tubes being regularly and evenly distributed around a central axis parallel to the direction of the tubes, the tubes being located within a ring-shaped zone having a cross-sectional area of which the inner diameter is at least 25 percent of the outer diameter, and the heat-exchanger includes means for radially converging the flow of the second fluid to enter and pass through the region

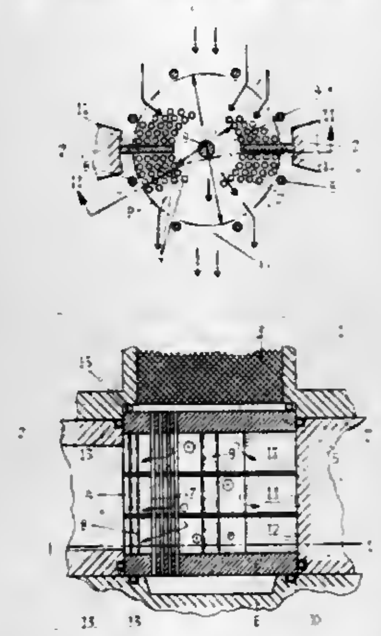

defined by said inner diameter and then radially diverging the flow of the second fluid exiting said defined region, said converging-diverging means providing converging and diverging flow within said ring-shaped zone and including two baffle plates each protruding radially into said ring-shaped zone to about said inner diameter from the walls bounding the space or chamber in which the tubes are disposed, the second fluid entering the vicinity of the tubes past one portion of the outer periphery of said zone and exiting past a second portion of the outer periphery different from said one portion.

4,298,058
TUBE BUNDLE HEAT EXCHANGER
Jörg Wochele, Zofingen, Switzerland, assignor to BBC, Brown, Boveri & Company Limited, Baden, Switzerland
Filed Apr. 26, 1979, Ser. No. 33,421
Claims priority, application Switzerland, Apr. 28, 1978, 4629/78
Int. Cl.³ F28F *9/22;* **F28D** *7/10*
U.S. Cl. 165—161 **4 Claims**

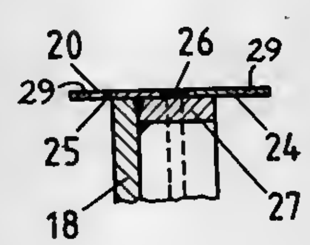

1. A tube bundle heat exchanger for exchanging heat between a first fluid and a second fluid, comprising:
a first casing;
a second pressure-tight casing mounted about said first casing such that said first casing is freely movable in its longitudinal direction within the second casing;
pressure equalizing means included on said first casing for approximately equalizing the pressure in the region enclosed by said first casing to the pressure in the region between said first casing and said second casing;
a plurality of heat exchanger tubes contained in said first casing, each tube having an inner surface and an outer surface, one of said surfaces being in communication with said first fluid, and the other of said surfaces being in communication with said second fluid;
zigzag-shaped dividing wall means, defining oblique wall sections, and baffle means for forming a conduit for directing the flow of said second fluid such that the flow is substantially only diagonal to said heat exchanger tubes;
said dividing wall means extending longitudinally with respect thereto being fixedly connected between adjacent heat exchanger tubes and
said baffle means including baffles which are tightly connected to said first casing and which extend normal to said heat exchange tubes.

4,298,059
HEAT EXCHANGER AND PROCESS FOR ITS MANUFACTURE
Axel Krauth; Horst R. Maier; Hans-Juergen Phlmann, all of Selb; Siegfried Foerster, Alsdorf, and Manfred Kleeman, Quadrath, all of Fed. Rep. of Germany, assignors to Rosenthal Technik AG, Selb and Kernforschungsanlage Juélich GmbH, Juelich, both of, Fed. Rep. of Germany
Filed Sep. 24, 1979, Ser. No. 77,893
Claims priority, application Fed. Rep. of Germany, Sep. 23, 1978, 7828445
Int. Cl.³ F28F *3/00*
U.S. Cl. 165—166 **5 Claims**

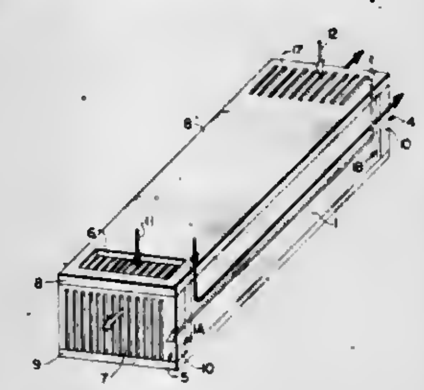

1. A recupertive heat exchanger, comprising:
a body of ceramic material having longitudinal ends, outer walls and a plurality of generally parallel flow channels arranged adjacently to one another generally axially with respect to said body, said flow channels having longitudinal sides which extend axially with respect to said body and a pair of frontal sides disposed at the axial ends of said flow channels, certain of said longitudinal sides being located immediately adjacent said outer walls, each of said flow channels including orifices for the entry and exit of flow media, said orifices including an orifice in one specific frontal side of each flow channel and an orifice in one of said certain longitudinal sides thereof, said flow channels extending over the entire length of said body from one longitudinal end to the other, adjacent flow channels having a common partition wall, said plurality of flow channels including a plurality of first flow channels for carrying a first heat transfer medium and a plurality of second flow channels, alternatingly arranged with respect to said first flow channels, for carrying a second heat exchange medium, each of said flow channels extending over its entire length next to the channel which is directly adjacent to it, said first channels having an inlet positioned on one lateral side of said body near a first longitudinal end of said body and an outlet positioned in the opposite, second longitudinal end of said body, and said second flow channels having an inlet positioned on one lateral side of said body near said second longitudinal end of said body and an outlet in said first longitudinal end of said body, said flow channels also being closed at their frontal sides and along their longitudinal sides except for said orifices in said specific frontal sides of said flow channels and said orifices in said certain longitudinal sides thereof, said orifices in said certain longitudinal sides being inlet orifices at least partially defining said inlets, said orifices in said specific frontal sides being outlet orifices at least partially defining said outlets.

4,298,060
FLUID JACKET FOR A VESSEL
Tecwyn L. Williams, Cowes, England, assignor to Elliott Turbomachinery Limited, England
Filed Aug. 13, 1979, Ser. No. 66,121
Claims priority, application United Kingdom, Feb. 14, 1979, 5218/79
Int. Cl.³ F28F *3/12*
U.S. Cl. 165—169 **3 Claims**

1. A heat exchange apparatus comprising a vessel having curved exterior surface and a fluid jacket disposed about the curved exterior surface of said vessel, said fluid jacket comprising a plurality of sheets of relatively thin, complimentarily curved, material disposed on the exterior surface of said vessel; each of said sheets having a plurality of relatively small depressions spaced about the surface thereof and extending generally radially inwardly into engagement with, and being sealingly secured to the exterior surface of said vessel, thereby defining a fluid flow channel between the exterior surface of said vessel and said sheets; at least portions of the edges of each of said sheets being turned generally radially inwardly into contact with and being sealingly secured to the exterior surface of said vessel; at least a portion of an edge of selected pairs of adjacent sheets extending outwardly and being sealingly secured to the corresponding adjacent edge portion of the other of said pairs of adjacent sheets to provide an interconnecting fluid flow channel for communicating the fluid flow channels and to provide a desired fluid flow path across the surface of said vessel; and said heat exchange apparatus having a fluid inlet passage and a fluid outlet passage for passing fluid to and from said fluid flow channels.

4,298,061
HEAT EXCHANGER WITH CRIMPED FLANGE SEAM
Russell W. Hoeffken, Belleville, Ill., assignor to The Singer Company, Stamford, Conn.
Filed Aug. 15, 1980, Ser. No. 178,338
Int. Cl.³ F24H *3/00;* **F28F** *3/10, 3/12*
U.S. Cl. 165—170 **4 Claims**

1. A heat exchanger unit for a hot-air furnace having complementary sides with engaged flanges along one or more edges of the unit where a flange on one side is folded over a flange on the other side, the folded flange on the one side and flange on the other being crimped together along resulting seams into one set of lengthwise spaced edge portions extend-

ing in one direction with respect to a longitudinal plane dividing the complementary sides of the heat exchanger, and into

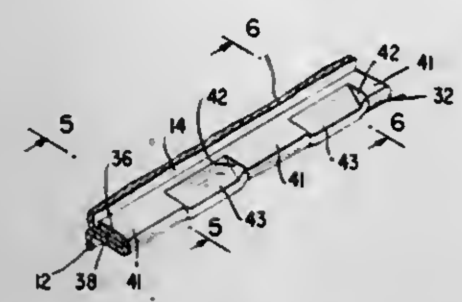

another set of longitudinally spaced edge portions extending between the first mentioned portions in another direction with respect to the said plane.

4,298,062
HEAT EXCHANGERS AND METHOD OF MAKING SAME

Stephen F. Pasternak, Park Rige, Ill., assignor to Peerless of America, Inc., Chicago, Ill.
Filed Dec. 18, 1978, Ser. No. 970,438
Int. Cl.³ F28F *1/14*
U.S. Cl. 165—181 **33 Claims**

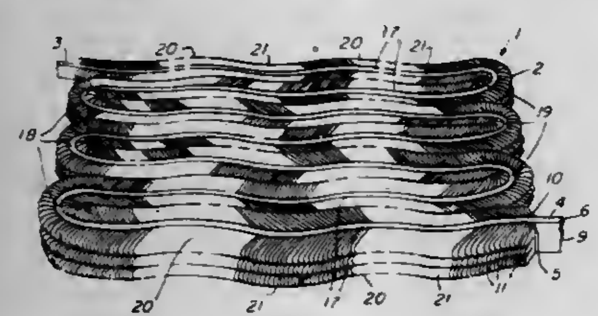

1. A heat transfer element comprising
a. an elongated conduit having a passageway for working fluid extending longitudinally therethrough,
b. a plurality of fins disposed in spaced relation to each other
(1) longitudinally of said conduit,
(2) on two oppositely disposed sides of the latter
c. said fins on each of said sides projecting outwardly away from said fins on the other of said sides,
d. adjacent ones of said fins on each of said sides defining a passageway therebetween
e. said conduit having a plurality of longitudinally extending undulations, projecting in opposite directions relative to the longitudinal axis of said conduit,
f. said undulations being in a direction relative to the length of said conduit transverse to the direction said two sides of said conduit are disposed relative to each other,
g. certain of said passageways on each of said sides being disposed substantially perpendicular to the length of said conduit, and
h. passageways on opposite sides of said certain passageways being disposed in progressively oppositely diverging angles to said certain passageways.

4,298,063
METHODS AND APPARATUS FOR SEVERING CONDUITS

John A. Regalbuto, and Glenn B. Christopher, both of Forth Worth, Tex., assignors to Jet Research Center, Inc., Arlington, Tex.
Filed Feb. 21, 1980, Ser. No. 123,225
Int. Cl.³ E21B *29/02*
U.S. Cl. 166—55 **38 Claims**

1. Apparatus for severing a conduit along a plane extending transversely through the conduit comprising:
an elongated housing adapted to be removably positioned within said conduit, said housing forming a pair of longitudinally spaced-apart fuel chambers therewithin communicated by an impingement passage extending longitudinally between said fuel chambers and having a plurality of fuel reaction products discharge nozzles communicated with said impingement passage said discharge nozzles being located longitudinally intermediate said fuel chambers and

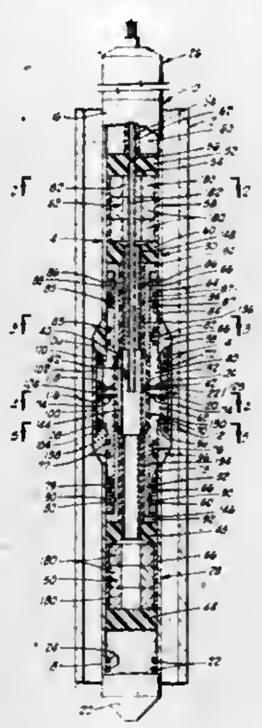

disposed transversely through the sides of said housing; and
means attached to said housing for simultaneously igniting solid non-explosive incendiary fuel contained in said fuel chambers whereby reaction products formed therefrom travel longitudinally in opposite directions through said impingement passage collide and exit said housing by way of said discharge nozzles.

4,298,064
REMOTELY OPERATED COUPLING AND WELL DEVICES EMPLOYING SAME

John E. Lawson, London, England, assignor to Armco Inc., Middletown, Ohio
Filed Feb. 11, 1980, Ser. No. 120,047
Int. Cl.³ E21B *33/035*
U.S. Cl. 166—75 A **14 Claims**

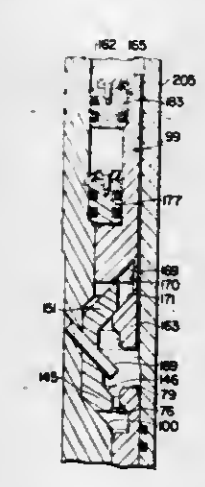

1. In a remotely operated coupling for connecting a load to an upper member from which the load is to be suspended, the combination of
a first member to be connected to the load, the first member having a first frustoconical shoulder;
a coupling member;
means carried by the coupling member and having a second frustoconical shoulder which can be spaced below the

first shoulder so as to be parallel thereto with the first and a second shoulder then being spaced apart to define an annular space;
a piston disposed within said coupling member and having a transverse annular segment-retaining groove defined by frustoconical upper and lower side walls which are mutually parallel and spaced apart axially of the coupling member,
the side walls of the segment-retaining groove lying in frustoconical planes which slant downwardly to intersect the frustoconical planes of the first and second shoulders;
a plurality of arcuate coupling segments,
each of the coupling segments being of generally C-shaped radial cross section and including
an upper portion defined by mutually parallel frustoconical upper and lower faces,
a lower portion defined by mutually parallel frustoconical upper and lower faces, and
an intermediate portion joining the upper and lower portions,
the angle of taper of the frustoconical upper and lower faces of the upper portion being the same as the angle of taper of the frustoconical side walls of the segment-retaining groove of the piston,
the angle of taper of the frustoconical upper and lower faces of the lower portion being the same as the angle of taper of the first and second shoulders,
the coupling segments being arranged in an annular series with the upper portions of the segments slidably disposed in the segment-retaining groove of the piston;
means carried by the coupling member and having surface portions defining an annular recess of generally C-shaped radial cross section disposed to receive the coupling segments when the segments are moved radially away from the piston;
means carried by the coupling member and presenting surfaces coacting with the piston to define expansible chambers; and
means for supplying pressure fluid selectively to the expansible chambers to selectively drive the piston upwardly and downwardly relative to the coupling member;
the lower portions of the coupling segments being dimensioned to enter the space between the first and second shoulders when, as the piston is driven downwardly while the lower faces of the lower portions of the segments engage a second shoulder,
application of a downward load to the first member then causing the lower portions of the coupling segments to be clamped between the first and second shoulders and the load to be transferred to the coupling member via the first and second shoulders and the lower portions of the segments.

4,298,065
PITLESS ADAPTER

Henry A. Baski, 1586 Robb Way, Denver, Colo. 80226
Filed Dec. 3, 1979, Ser. No. 99,831
Int. Cl.³ E21B *43/00*
U.S. Cl. 166—88 **4 Claims**

1. A pitless adapter arranged for either a turbine pump or a submerged pump, comprising:
(a) a full diameter pipe arranged to extend from above ground surface to a well casing and having a diameter larger than the well casing so as to telescope over a connector with the end of the connector extending into the lower end of said full diameter pipe forming a spool seat and said full diameter pipe being connected to said well casing;
(b) a lateral pipe distributor secured to said full diameter pipe adjacent said lower end of full diameter pipe;
(c) a spool mounted in said full diameter pipe including upper and lower plates and a central pipe having at least one communication port to said full diameter pipe and said lateral pipe, sealing means between the circumference of each said plate and said full diameter pipe;
(d) said central pipe including connecting means to a drop pipe at its lower end and pulling means at its upper end;
(e) means for sealing said central pipe preventing a flow of fluid out of its top, including a seal ring internally of said central pipe above said at least one port;

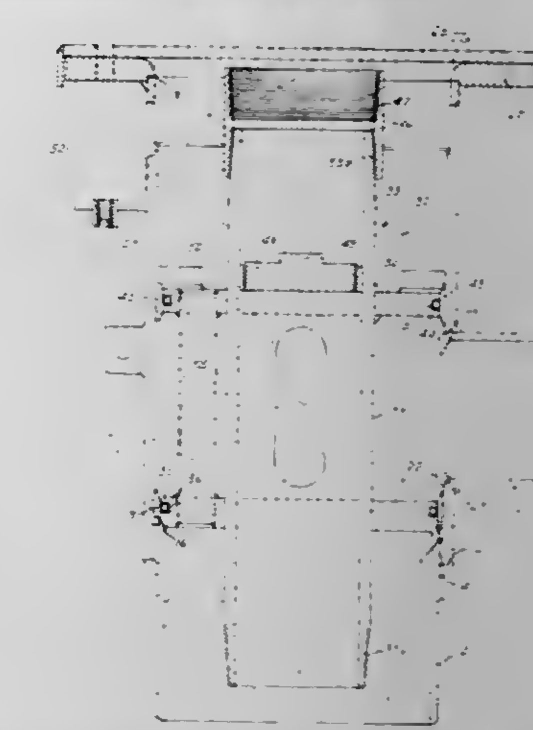

(f) means engaging said seal means sealing said central pipe against upward flow of well fluid;
(g) at least one spacer ring being mounted between said full diameter pipe and the lower plate;
(h) and cap means for closing the top of said full diameter pipe.

4,298,066
PROCESS AND DEVICE FOR INJECTING A LIQUID AGENT USED FOR TREATING A GEOLOGICAL FORMATION IN THE VICINITY OF A WELL BORE TRAVERSING THIS FORMATION

Jean Colonna, Joinville le Pont; Jean-Michel Fitremann, Carquefou; Richard Genin, Nantes, and Jean-Paul Sarda, Rueil-Malmaison, all of France, assignors to Institut Francais du Petrole, Rueil-Malmaison, France
Filed Jun. 20, 1980, Ser. No. 161,616
Claims priority, application France, Jun. 21, 1979, 79 16188
Int. Cl.³ E21B *33/138, 41/00, 43/27*
U.S. Cl. 166—300 **11 Claims**

1. A process for placing a liquid treating agent in a zone of a geological formation adjacent a well bore, comprising positioning in the well bore a tubular column having a lower end located substantially at the level of the formation to be treated, the tubular column internally comprising holding abutment means near its lower end, lowering through said tubular column a spraying pipe of elongate shape, adapted for sealingly seating on said holding abutment means, spraying said liquid treating agent into the wall of the geological formation through said spraying pipe, by introducing from the ground surface, through said tubular column, said liquid agent and a pressurized gaseous fluid, wherein the inner diameter D and the length L of the injection pipe as well as the flow rate Q of the injected gaseous fluid are fixed as a function of the pressure prevailing at the level of the treated formation, of the density of the gaseous fluid, and of the interfacial tension of the liquid treating agent, so that the following relationships are both substantially satisfied:

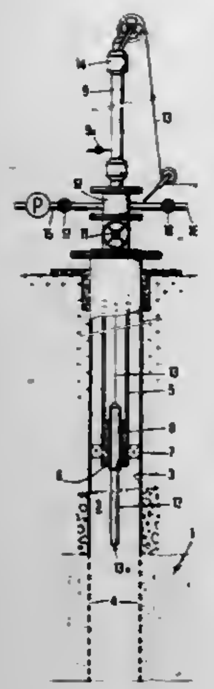

$$D = k \cdot Q^{\alpha}\left(\frac{P_o}{P}\cdot\frac{\rho_o}{\sigma}\right)^{\beta} \text{ and}$$

$$\frac{L}{D} > 10,$$

D and L being expressed in meters,

P_o being the value of the standard pressure (1 atmosphere),

P being the value of the pressure prevailing at the level of the formation, measured with the same unit as P_o,

Q being the injected gas flow rate, in m^3/second, measured under the standard temperature and pressure conditions,

ρ_o being the specific gravity of the gas in kg/m^3, measured under the standard conditions,

σ being the interfacial tension of the injected liquid agent, in Newton/meter,

α being a dimensionless coefficient having a value close to 0.5,

β being a dimensionless coefficient having a value close to 0.25, and

k being a coefficient whose value is comprised between 2×10^{-2} and 6×10^{-2} with the above-defined units.

6. A device for spraying a liquid agent used for treating a geological formation in the vicinity of a borehole traversing the formation, the device comprising a tubular column positioned in the borehole and connected at its upper part with means for supplying the liquid treating agent and pressurized gaseous fluid thereto, the lower part of said tubular column being extended by an elongate pipe having a smaller internal diameter than the tubular column, the internal diameter D and the length L of the spraying pipe being such that the following relationships are both satisfied:

$$D = k\, Q^{\alpha}\left(\frac{P_o}{P}\cdot\frac{\rho_o}{\sigma}\right)^{\beta} \text{ and}$$

$$\frac{L}{D} > 10,$$

D and L being expressed in meter,

P_o being the value of the standard pressure (1 atmosphere),

P being the value of the pressure prevailing at the level of the formation, measured with the same unit as P_o,

Q being the injected gas flow rate, in m^3/second, measured under the standard temperature and pressure conditions,

ρ_o being the specific gravity of the gas in kg/m^3, measured under the standard conditions,

σ being the interfacial tension of the injected liquid agent, in Newton/meter,

α being a dimensionless coefficient having a value close to 0.5,

β being a dimensionless coefficient having a value close to 0.25, and

k being a coefficient whose value is comprised between 2×10^{-2} and 6×10^{-2} with the above-defined units.

4,298,067

METHOD AND APPARATUS FOR INSTALLING MULTIPLE PIPE STRINGS IN UNDERWATER WELLS

John E. Lawson, London, England, assignor to Armco Inc., Middletown, Ohio

Filed Feb. 11, 1980, Ser. No. 120,851

Int. Cl.[3] E21B *33/035*

U.S. Cl. 166—315 14 Claims

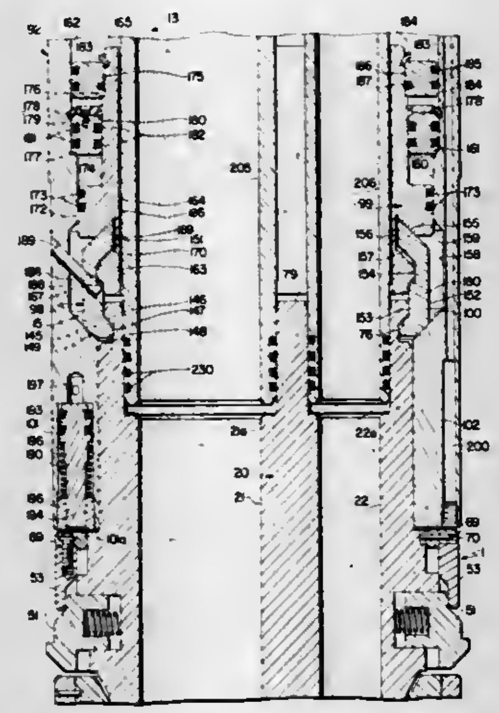

12. In a well tool adapted to be landed in the upright bore of a support member and then rotated about an upright axis to a predetermined rotational position relative to the support member, the combination of

elongated body means having a cylindrical outer surface portion;

a support ring adapted to shoulder on the support member when the tool is landed;

an annular antifriction thrust bearing superimposed on said support ring,

said elongated body means extending through said bearing and said support ring with the capability of both rotating and moving axially relative to the bearing and the support ring;

means secured to said elongated body means and presenting a transverse annular shoulder located above and facing toward the thrust bearing;

load-transmitting means disposed between said thrust bearing and said shoulder,

said load-transmitting means being radially movable between an inner position, in which said load-transmitting means is aligned between said thrust bearing and said shoulder, and an outer position, in which said load-transmitting means is spaced outwardly of said shoulder, said load-transmitting means being resiliently biased to said outer position;

an annular retaining member carried by said elongated body means for movement between a lower position, in which said retaining member surrounds said load-transmitting means and holds said load-transmitting means in said inner position, and an upper position, in which said load-transmitting means is free to move to said outer position; and

means for moving said retaining member to said upper position.

4,298,068

HEAT SENSITIVE RELEASE DEVICES

Geddes A. Bray, Moston, England, assignor to Mather & Platt Limited, Manchester, England

Division of Ser. No. 776,057, Mar. 9, 1977, abandoned. This application Dec. 15, 1978, Ser. No. 970,053

Claims priority, application United Kingdom, Mar. 12, 1976, 9915/76

Int. Cl.[3] A62C *37/08*

U.S. Cl. 169—39 7 Claims

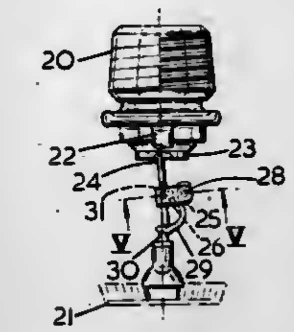

1. A heat sensitive release device comprising first and second relatively movable components, and a normally stable strut system located between the components to retain them in fixed positions relative to each other but collapsible on attainment of a predetermined temperature, the strut system comprising:

(i) a heat sensitive element;

(ii) a catch element having opposed wings between which the heat sensitive element is retained;

(iii) a lever fulcrummed on the first component and bearing against the heat sensitive element;

(iv) a strut engaging at one end the lever adjacent the fulcrum and at its other end the second component and joined to the catch element to retain the lever and thereby the strut system in a stable condition;

(v) an impediment joined to the strut system and disposed between the lever and the strut to prevent lever movement towards the strut and removal of the heat sensitive element from the catch element said impediment being attached to the catch element, whereby on attainment of the predetermined temperature the heat sensitive element disengages from the wings of the catch element and permits the lever to pivot about the fulcrum to disengage the strut from the second component which together with the first component are both freed for relative movement.

4,298,069

SOIL CULTIVATING IMPLEMENTS

Cornelis van der Lely, 7, Brüschenrain, Zug, Switzerland

Filed Sep. 10, 1979, Ser. No. 73,862

Claims priority, application Netherlands, Sep. 11, 1978, 7809222; Sep. 11, 1978, 7809223

Int. Cl.[3] A01B *33/06, 33/14*

U.S. Cl. 172—59 11 Claims

1. A soil cultivating implement comprising a frame and a plurality of soil working members being supported on a portion of said frame, driving means connected to rotate said members about respective upwardly extending axes and said driving means including transmission gear means for each of said members, each member comprising a unitary gear casing that is releasably fastened to said frame portion, said frame portion being elongated and extending transverse to the direction of travel, the casings of said members being mounted along the length of said frame portion, said frame portion being inverted channel-shaped in cross-section with an upper apertured base and spaced apart, downwardly extending limbs, said casings being positioned between the downwardly extending limbs, a top portion of each casing comprising an upwardly

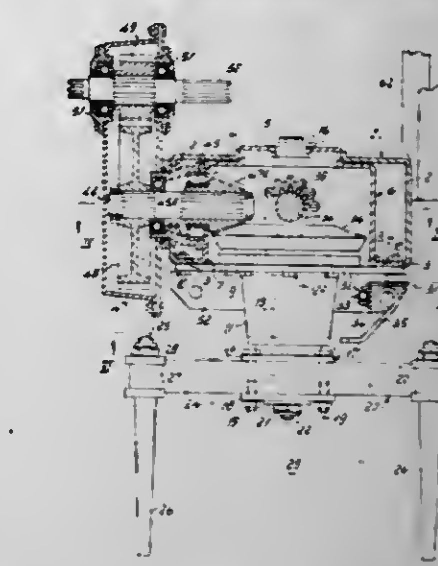

extending projection that is positioned in a corresponding hole of said base of the frame portion.

4,298,070

SOIL CULTIVATING MACHINES

Cornelis van der Lely, 7, Brüschenrain, Zug, Switzerland

Filed Aug. 14, 1979, Ser. No. 66,639

Claims priority, application Netherlands, Aug. 18, 1978, 7808557; Aug. 18, 1978, 7808558

Int. Cl.[3] A01B *33/02, 33/14*

U.S. Cl. 172—123 19 Claims

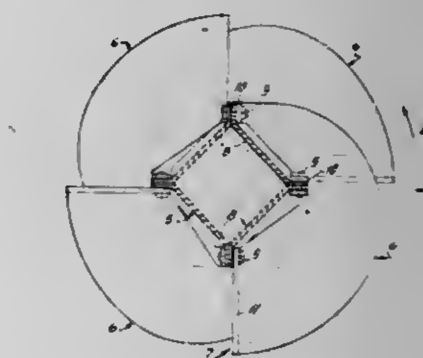

1. A soil cultivating machine including a frame and a rotor journalled in said frame, said rotor comprising an elongated carrier that is rotatable about a substantially horizontally axis and a plurality of cultivating members mounted along the length of said carrier, each member being flat and extending outwardly from the axis of rotor rotation, the outer circumference of said member being curved and defining part of the perimeter of said rotor, a leading end of said circumference being located nearer said axis than a trailing end of said member, said trailing end comprising a rim that is bent-over through an angle of about 90°.

4,298,071

CULTIVATOR WITH PARALLEL QUADRANT PLATES FOR POSITIONING CULTIVATING ELEMENT

Carroll J. Whitfield, and Anthony W. Lastinger, both of Tifton, Ga., assignors to Kelley Manufacturing Co., Tifton, Ga.

Division of Ser. No. 941,067, Sep. 11, 1978, Pat. No. 4,231,433. This application Jun. 2, 1980, Ser. No. 155,650

Int. Cl.[3] A01B *65/02*

U.S. Cl. 172—624 3 Claims

1. In a cultivator having an elongated tool bar extending generally transverse to the normal direction of travel of said cultivator, a longitudinally extending tool support arm mounted from said tool bar for movement about a transverse axis, the combination therewith of:

(a) means for mounting a cultivating tool on said tool support arm comprising a box member having substantially parallel upper and lower surfaces mounted on the distal end of said tool support arm, at least one of said upper and lower surfaces having a tongue slot therein,
(b) a tongue member in said tongue slot,
(c) a quadrant assembly having substantially parallel upper and lower quadrant plates,
(d) at least one shank member fixedly secured to said upper and lower quadrant plates having means disposed near the lower end thereof for mounting said cultivating tool,

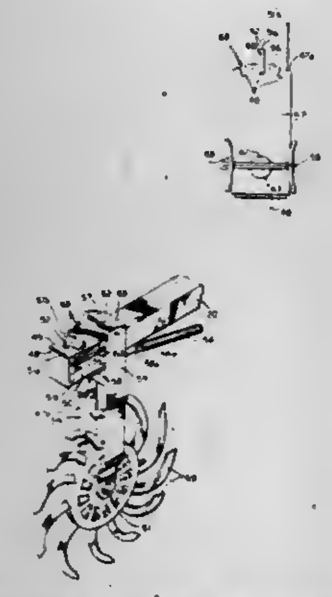

(e) means defining a vertical axis through said box member for providing pivotal movement of said upper and lower quadrant plates with respect to said upper and lower surfaces, and
(f) a plurality of notches disposed at the edge of at least one of said upper and lower quadrant plates for securing the position of said upper and lower quadrant plates relative to said box member when said tongue member is registered in one of said plurality of notches.

4,298,072
CONTROL ARRANGEMENT FOR ELECTRO-MECHANICAL TOOL
Gordon P. Baker, Amelia, and Thomas E. Warman, Williamsburg, both of Ohio, assignors to Senco Products, Inc., Cincinnati, Ohio
Filed Aug. 31, 1979, Ser. No. 71,721
Int. Cl.³ B25C *1/06*
U.S. Cl. 173—13 **15 Claims**

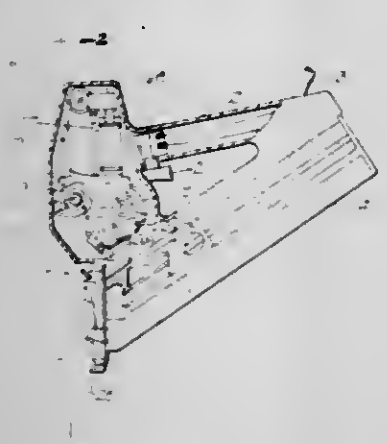

1. An electric impact tool comprising an impact member, a manually actuated control means, a work responsive control means, an electric motor driven flywheel and a support element, said flywheel and said support element being positionable with respect to each other by a distance less than the thickness of said impact member, and a solenoid responsive to actuation of both said manually actuated and said work responsive control means, for introducing the impact member between the flywheel and support element when spaced from each other by a distance less than the thickness of said impact member.

4,298,073
DRILL HEAD
George A. Yates, Grove City, Ohio, assignor to Eagle-Picher Industries, Inc., Cincinnati, Ohio
Filed May 3, 1979, Ser. No. 35,732
Int. Cl.³ E21B *7/02;* E21C *7/02*
U.S. Cl. 173—22 **8 Claims**

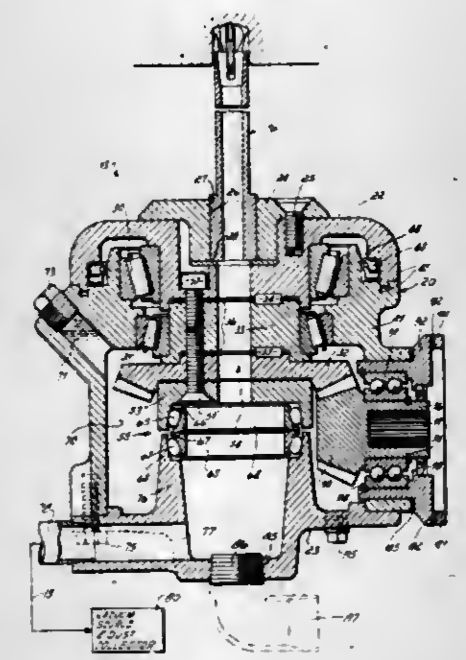

1. A drill head comprising,
a housing including a lower cover enclosing the lower end of said housing and having no fixed upper cover,
a rotatable cap covering the upper portion of said housing,
a chuck removably mounted in said cap,
a set of radial-thrust bearings only in the upper portion of said housing for rotatably mounting said cap with respect to said housing, said bearings including adjacent tapered upper and lower rollers, said radial-thrust bearings providing the only radial and thrust support for said rotatable cap and chuck,
a cavity below said radial-thrust bearing set for lubricant,
a rotatable driven bevel gear having a vertical axis and located in said cavity below said radial-thrust bearing set and connected to said cap for rotation therewith,
a driving bevel gear having a horizontal axis and rotatably mounted in the side of said housing and meshing with said driven bevel gear,
a passageway from said chuck through the lower cover of said housing for drawing, by vacuum, the grit from a drill tool in said chuck,
and a rotary face seal in the lower cover of said housing below said driven bevel gear for providing a rotary seal between said lower cover and the driven bevel gear,
whereby said face seal can be removed and replaced by removing said lower cover and without disturbing the radial-thrust bearing set.

4,298,074
SURGICAL DEVICE USING IMPULSE MOTOR
Terry M. Mattchen, Van Nuys, Calif., assignor to American Safety Equipment Corporation, Detroit, Mich.
Filed Aug. 9, 1976, Ser. No. 712,728
Int. Cl.³ B25D *9/00;* A61B *17/18;* B23B *5/22*
U.S. Cl. 173—129 **4 Claims**

2. In a surgical tool including an impulse motor, an output member for removing or breaking through tissue and impulse transmission means for transmitting impulses from the impulse

motor to the output member, a chamber and a piston hammer movable in the chamber from an initial position at the rear end of the chamber to an impacting position impacting the impulse transmission means at the forward end of the chamber, air supply means for supplying air to the ends of the chamber, valve means in the chamber for directing air to one or the other end of the chamber, and sensing means on the valve means for sensing the position of the piston hammer to change the valve means from directing air to one end of the chamber to directing air to the other end of the chamber, the improvement comprising:
the output means comprises a holding means for holding an impacting member, the impacting member being a wire, the holding means comprising guide means for supporting the impacting member, the impulse transmission means having a central bore aligned with the guide means for receiving a portion of the wire, gripping means extending through the guide means for gripping the impacting member and collet means around the guide means adjacent to the gripping means, the guide means and the collet means being movable relative to each other between a first position wherein the collet means urges the gripping means

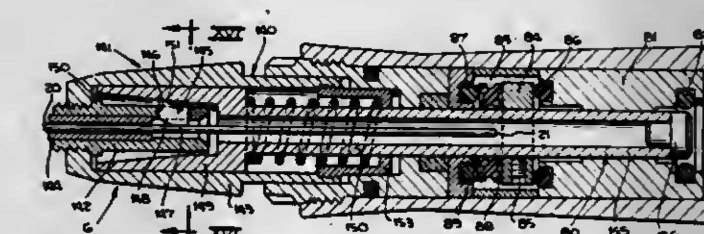

into the guide means to grip the impacting member and a second position releasing the gripping means to release the impacting member, the guide means is an elongated tube having at least one aperture therethrough, the clamping means comprising a wafer extending through each aperture, the collet means having a tapered end having a larger inside diameter at the end of the tool where the wire is driven tapering to a smaller diameter away from said end of the tool, the aperture being under said tapered portion, the second position of the collet having the greater inside diameter over the aperture to allow the wafers to move radially outward away from the inside of the guide means and out of gripping contact with the wire to permit movement of the wire in the guide means, and the first position of the collet having the smaller inside diameter over the aperture to force the wafers radially inward into the guide means to grip the wire and prevent its movement in the guide means, means connecting the collet means to the impulse transmission means to transmit impulses to the collet means, means interconnecting the collet means to the gripping means and means connecting the gripping means with the wire for transmitting impulses from the collet means through the gripping means to the wire.

4,298,075
DRIVE MEANS FOR TRAFFIC DELINEATOR
Lawrence J. Sweeney, Seneca, Pa., assignor to Franklin Steel Company, Franklin, Pa.
Filed Dec. 10, 1979, Ser. No. 101,440
Int. Cl.³ B23B *45/16*
U.S. Cl. 173—129 **9 Claims**

7. A combination of a drive means for driving into the ground or a road surface a traffic delineator assembly of the type which includes a channel shaped anchor post having a pair of outwardly extending flanges, the upper end of the channel being connected to a solid plate member, and an adaptor for transmitting the impacts of an impact type drive tool to said drive means wherein:
said drive means comprises;
a body having a lower surface for surface contact with the upper end of said anchor post,
a recess in an upper surface of said body,
and a pair of legs depending from said lower surface to straddle the channel of the anchor post and locate between the flanges of said anchor post and said plate member;
and wherein said adaptor comprises;

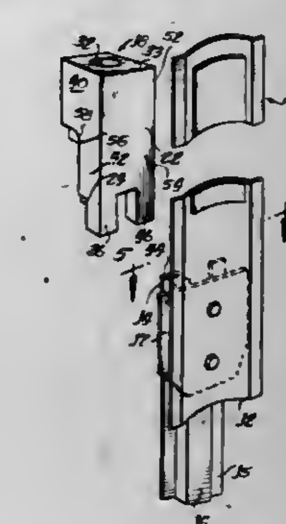

a shank;
a male member extending upward from said shank for insertion into a female member of the impact type drive tool;
and a linking member depending downward from said shank for insertion into said recess.

4,298,076
CHUCK AND WRENCH ASSEMBLY FOR RAISE DRILL APPARATUS
Jack O. Winsor, Seattle, Wash., and Dennis J. Patrick, Columbus, Ohio, assignors to Dresser Industries, Inc., Dallas, Tex.
Filed May 14, 1979, Ser. No. 38,753
Int. Cl.³ E21B *3/00, 7/22, 19/16, 19/18*
U.S. Cl. 173—164 **15 Claims**

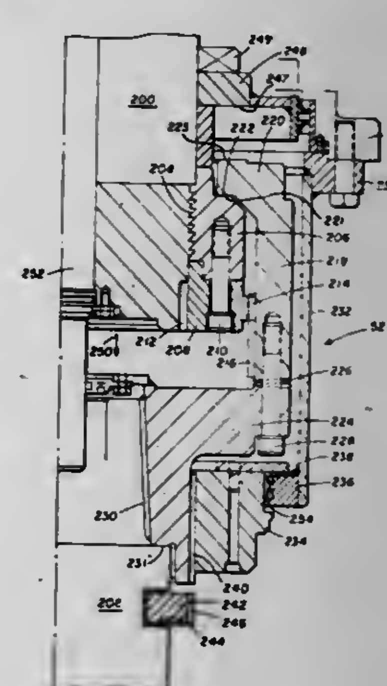

1. A chuck mechanism for a raise drill apparatus, comprising:
(a) a drive shaft;
(b) means for rotating the shaft;
(c) a thrust nut axially and rotatably fixed to the drive shaft and having an upper contact surface facing in the reaming direction;
(d) a bell housing enveloping the thrust nut and having upper and lower contact surfaces, said lower contact surface being adapted to be engaged by the upper contact

surface of the thrust nut for transmitting force to the bell housing in the reaming direction;

(e) A first coupling means for rotatably coupling the thrust nut and bell housing while allowing relative axial movement therebetween;

(f) a second coupling means for rotatably coupling a section of drill pipe to the bell housing co-axial with the drive shaft;

(g) an annular collar rotatably and axially fixed to the drive shaft and having a lower contact surface adapted to engage the upper contact surface of the bell housing for transmitting force to the bell housing in the pilot hole drilling direction;

(h) the upper contact surface of the thrust nut and lower contact surface of the bell housing and the first coupling means being shaped and dimensioned to allow the drill pipe to deflect laterally relative to the drive shaft; and

(i) an outer support means connected to a non-rotatable portion of the raise drill apparatus in the path of movement of the bell housing when the drill pipe deflects a predetermined amount for absorbing the moment load exerted by the deflected drill pipe.

4,298,077

CIRCULATION VALVE FOR IN-HOLE MOTORS

Maurice M. Emery, Costa Mesa, Calif., assignor to Smith International, Inc., Newport Beach, Calif.

Filed Jun. 11, 1979, Ser. No. 47,296

Int. Cl.³ E21B ***4/02***

U.S. Cl. 175—65 **7 Claims**

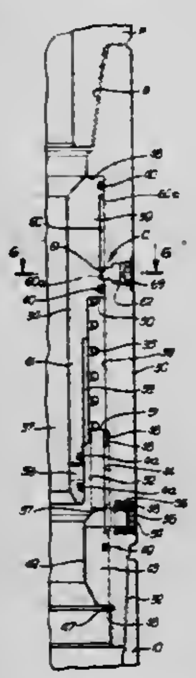

1. An in-hole motor apparatus comprising: an in-hole fluid driven motor having housing structure connectable to a pipe string for receiving motor driving fluid and a valve assembly; said valve assembly including a tubular body member having a side port; said side port communicating with the interior and exterior of said body member and said housing; a valve sleeve member having a flow passage longitudinally therethrough for the flow of fluid to said motor when communication between said side port and said exterior is closed; said valve sleeve being shiftable in said body member in response to fluid flow and interruptions of fluid flow between a first, second and third positions at which said side port is in sequence opened, closed and reopened, and control means for positioning said sleeve member in said first, second and third positions in said sequence.

4,298,078

METHOD OF INHIBITING STICKING OF WELL STRING

James D. Lawrence, Houston, Tex., assignor to Dailey Oil Tool, Inc., Houston, Tex.

Division of Ser. No. 3,045, Jan. 12, 1979. This application Mar. 17, 1980, Ser. No. 130,852

Int. Cl.³ E21B ***21/00***

U.S. Cl. 175—72 **1 Claim**

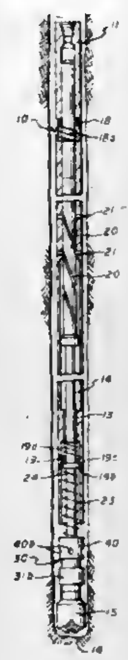

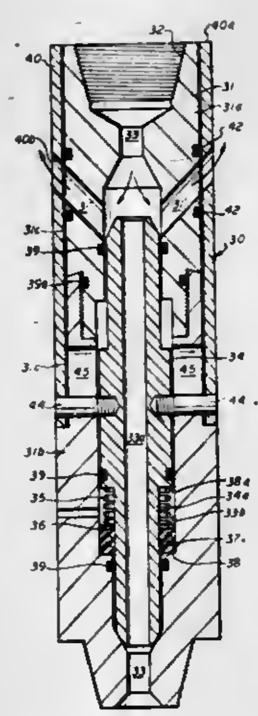

1. A method of inhibiting well string sticking during operations in a well bore comprising the steps of:

a. connecting spring loaded, normally closed valve means in the well string;

b. lowering the well string to open the valve means; and

c. circulating fluid to discharge through a lower end of the well string and also out the open valve means into the well bore for flushing thereof.

4,298,079

ROTARY DRILL BIT

Gösta Norlander, Surte, Sweden; Angelo Vignotto, and Mario Micca, both of Turin, Italy, assignors to Sandvik Aktiebolag, Sandviken and Aktiebolaget SKF, Göteborg, both of, Sweden

Filed Apr. 1, 1980, Ser. No. 136,351

Claims priority, application Sweden, Mar. 28, 1979, 7902763

Int. Cl.³ E21B ***10/18, 10/22;*** **F16J** ***15/32***

U.S. Cl. 175—339 **15 Claims**

1. A rotary roller bit comprising a head having a bearing shaft, at least one roller cutter, said roller cutting being rotatably carried on said bearing shaft over bearing means and having an annular sealing means, said annular sealing means being disposed in an annular gap between said head and roller cutter for sealing said bearing means, characterized in that said sealing means comprises a main body and an elastically yieldable tongue firmly attached to said main body of the sealing means, said tongue being formed of a nonmetallic elastic material and having a length substantially exceeding its thickness, said tongue extending from said main body in a direction having a radial component relative to the rotational axis of the roller cutter so that its free end is radially spaced from its end being attached to the main body of the sealing means, thereby causing axial or wobbling movements of the roller cutter relative to the head to be taken up mainly by the yielding movement of tongue relative to the main body.

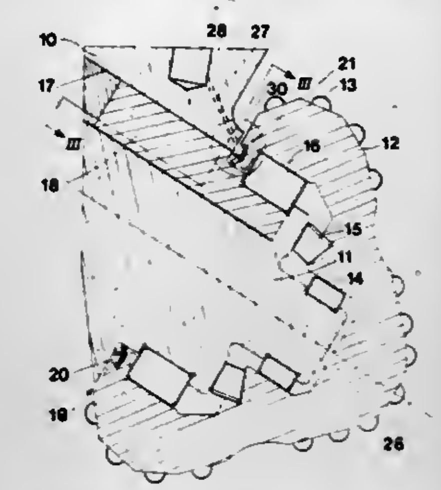

4,298,080

ROCK CUTTING TOOLS

Henry J. Hignett, Reading, England, assignor to Secretary of State for Transport in Her Britannic Majesty's Government of the United Kingdom of Great Britain and Northern Ireland, London, England

Filed May 25, 1978, Ser. No. 909,444

Claims priority, application United Kingdom, May 25, 1977, 22129/77

Int. Cl.³ E21D ***9/10;*** **E21C** ***35/18***

U.S. Cl. 175—373 **10 Claims**

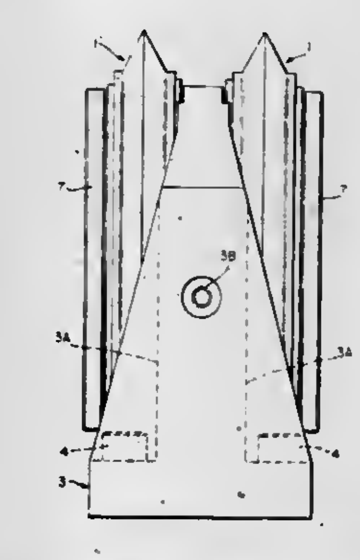

1. A full-face rock tunnelling tool comprising a pair of disc cutters disposed in parallel, said disc cutters each having a peripheral cutting edge defined by a V-shaped circumferential portion; a support member for said cutters disposed radially inwardly of the cutting edges thereof, and on which each cutter is borne for rotation independently of the other; and a mounting pedestal to which said member is attached between planes defined by the respective cutting edges of the cutters.

4,298,081

DIFFERENTIAL WEIGHING SYSTEM PROVIDING IMPROVED SIGNAL TO NOISE RATIO

Stewart B. Blodgett, 6119 Jessamine St., Houston, Tex. 77081

Filed May 27, 1980, Ser. No. 153,591

Int. Cl.³ G01G ***23/06, 3/14, 3/08***

U.S. Cl. 177—187 **8 Claims**

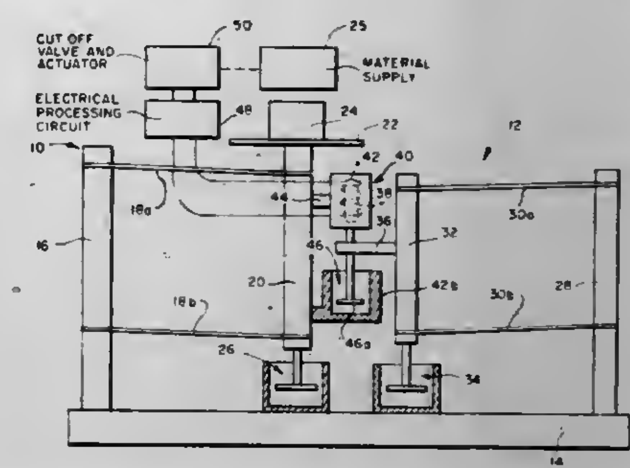

1. A differential weighing system comprising a primary suspension including a weight supporting means, a secondary suspension having a natural frequency substantially matched to that of the primary suspension, first damping means for damping movement of the primary suspension relative to ground, second damping means for damping movement of the secondary suspension relative to ground, a third damping means for intercoupling the primary and secondary suspensions so as to provide damping of relative movement between the primary and secondary suspensions, and displacement responsive means, responsive to the relative displacement between the primary and secondary suspensions, for producing an output in accordance therewith.

4,298,082

ELECTRIC PROPULSION SYSTEM FOR WHEELED VEHICLES

Joseph A. Ramos, 18 Hill St., San Francisco, Calif. 94110

Filed Jul. 21, 1978, Ser. No. 926,837

Int. Cl.³ B60K ***17/08***

U.S. Cl. 180—65 R **6 Claims**

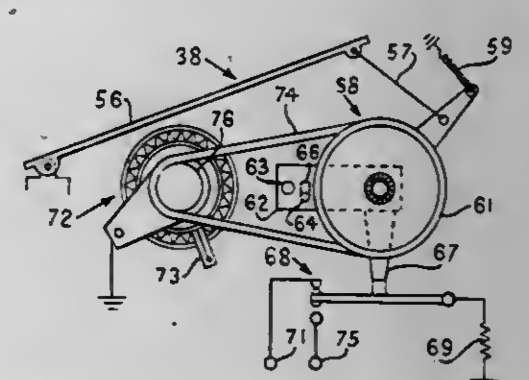

1. A propulsion system for a wheeled vehicle having an electric motor,

a variable speed power coupling unit connecting said motor to a drive shaft,

a generator connected to said shaft,

a battery connected by switching means to said motor and generator, and

control means including a movable accelerator pedal connected to a rheostat for controlling said variable speed power coupling unit and connected to operate a switch of said switching means having a first operating mode energizing said motor and a second operating mode energizing said generator, and means biasing said switch into said

second mode, with said pedal overcoming said biasing means upon depression to place said switch in said first mode and raising of said pedal a predetermined amount from any depressed position returns said switch to said second mode for disconnecting said battery from said motor and energizing said generator under conditions wherein said drive shaft is not being driven by said motor for minimizing the power required to drive said vehicle.

4,298,083

FLEXIBLE FILM AIR PALLET FOR MATERIAL MOVEMENT

Raynor A. Johnson, and Ralph M. Barrow, Jr., both of Newark, Del., assignors to American Industrial Research, Newark, Del.

Filed Jun. 13, 1979, Ser. No. 48,111

Int. Cl.³ B60V *1/04*

U.S. Cl. 180—125 **11 Claims**

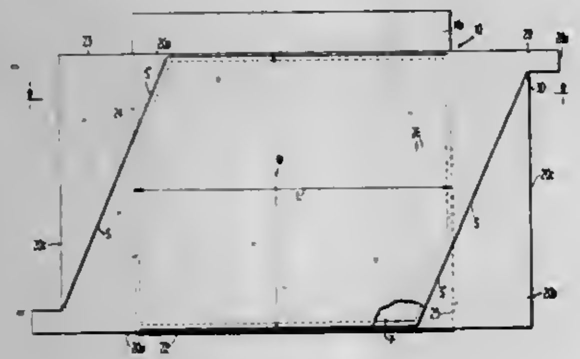

1. An air pallet comprising:

a relatively rigid planar backing member for supporting a load,

said backing member including longitudinal and lateral side edges,

a bottom, thin flexible sheet underlying said backing member, bearing perforations and having longitudinal side edges,

means including at least said thin flexible sheet forming a plenum chamber for retaining pressurized air, thereby being formed between said bottom sheet and said backing member;

whereby, said air pallet is supported for frictionless movement ovver a supporting surface,

a portion of said bottom sheet extending laterally beyond at least one of said lateral sides of said backing member and being overlapped, forming a fold line therein with overlapped upper and lower portions which are sealed together along said longitudinal side edges thereof,

a seal line joining said upper and lower overlapped portions of said thin flexible sheet and extending diagonally from said fold line to at least one of said longitudinal side edges,

an air inlet means formed in said sheet at the end of said seal line adjacent said fold line;

whereby, said pressurized air enters said plenum chamber through said air inlet means and is guided by said seal line towards said backing member to prevent rupture of said overlapped thin flexible sheet portions.

4,298,084

GUIDANCE SYSTEM FOR TRACKLAYING TRACTORS

Marvin H. Newell, 2056 Edgewood Dr., Lodi, Calif. 95240

Filed Apr. 10, 1980, Ser. No. 139,018

Int. Cl.³ B62D *1/26, 15/02*

U.S. Cl. 180—131 **10 Claims**

1. A guidance system for a track laying tractor for maintaining said tractor at a pre-selected distance from a previously formed ground furrow said tractor having a track roller frame, a rear sprocket, and front idler comprising:

(a) a rear mount frame attached to the rear outside portion of said track roller frame;

(b) a rear arm connected to said rear mount frame extending outwardly at substantially a right angle from said rear sprocket;

(c) a sight wheel mounted on said rear arm adapted for riding in said previously formed furrow at a selected fixed distance from said rear mount frame;

(d) a front frame attached to the front outside portion of said track roller frame;

(e) a front arm connected to said front mount frame extending outwardly from said tractor at substantially a right angle to said front idler;

(f) an extension arm slidably mounted coaxially on the distal end of said front arm;

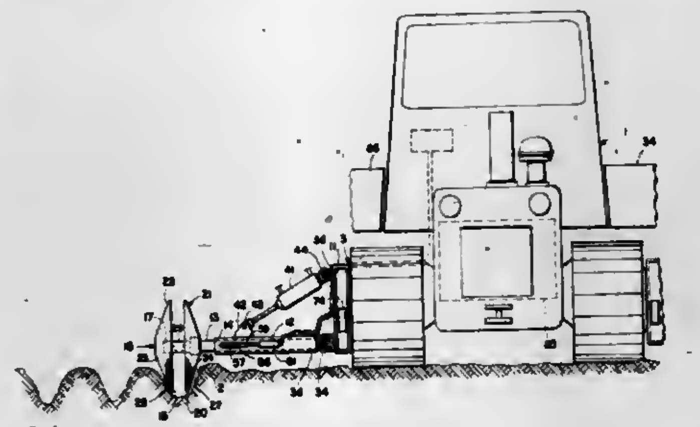

(g) furrow following means mounted on the distal end of said extension arm adapted for staying within said previously formed furrow at said selected fixed distance;

(h) transmittal means mounted on said front arm for measuring, and transmitting the difference in distance of said furrow following means from said front mount frame as compared to said selected fixed distance of said rear sight wheel from said rear mount frame; and

(i) receiver means operatively connected to said transmittal means for indicating the relative distance of said furrow following means from said front mount frame, and said selected fixed distance of said sight wheel from said rear mount frame.

4,298,085

AUTOMATIC FOUR-WHEEL DRIVE TRANSFER CASE

Shuzo Moroto, Handa, and Koji Kobayashi, Toyota, both of Japan, assignors to Aisin-Warner K.K., Aichi, Japan

Filed Nov. 15, 1979, Ser. No. 94,598

Claims priority, application Japan, Nov. 24, 1978, 53-145857

Int. Cl.³ B60K *17/34;* F16H *37/06, 1/44*

U.S. Cl. 180—247 **7 Claims**

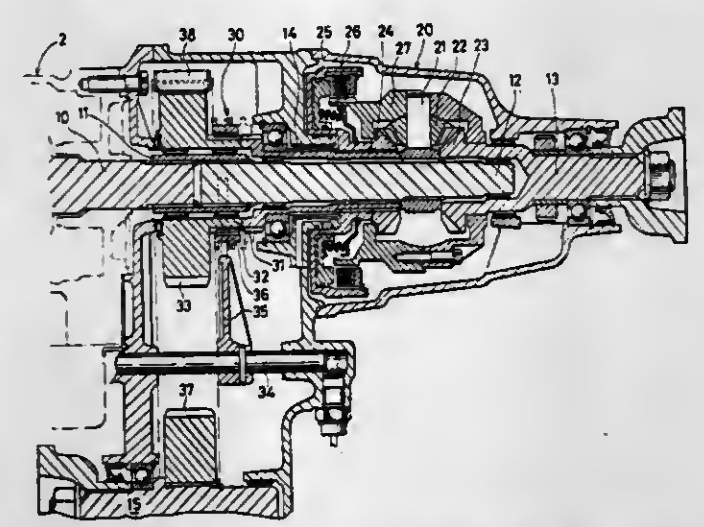

1. An automatic four-wheel drive transfer case for a vehicle, comprising:

(a) a differential gear drivingly connected to an output shaft of a transmission, said differential gear having first and second side gears and a casing;

(b) a rear-wheel drive output shaft drivingly connected to the first side gear;

(c) a clutch for releasably engaging the casing to the second side gear;

(d) a front-wheel drive output shaft;

(e) selective connection means for selectively connecting the front-wheel drive output shaft to the second side gear when four-wheel drive is selected; and

(f) clutch control means to engage and disengage the clutch in response to a signal indicating whether two-wheel or four-wheel drive has been selected and in response to signals representing the revolution speed of the rear-wheel and front-wheel drive output shafts.

4,298,086

COUPLING MEANS FOR HORIZONTAL VIBRATOR

William C. Pritchett, Plano, Tex., assignor to Atlantic Richfield Company, Los Angeles, Calif.

Filed Oct. 9, 1979, Ser. No. 83,070

Int. Cl.³ G01V *1/047*

U.S. Cl. 181—113 **14 Claims**

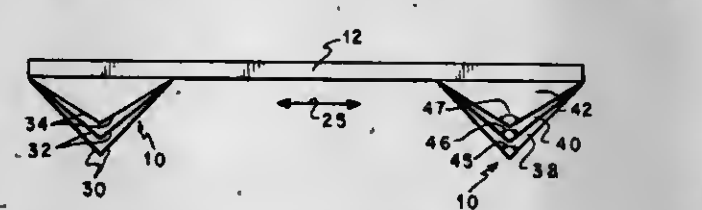

1. In a transducer for inducing shear waves in an elastic medium including a horizontally movable support means adapted to couple the energy of said transducer into said medium, the improvement comprising a plurality of cleat means on said support structure for engaging the surface of said medium, said cleat means being of differing depth.

4,298,087

UNIDIRECTIONAL SPEAKER ENCLOSURE

Dominique Launay, 4 Ave. des Chardons, 94800 Villejuif, France

Filed Aug. 15, 1979, Ser. No. 66,539

Claims priority, application France, Aug. 16, 1978, 78 23848

Int. Cl.³ H05K *5/00*

U.S. Cl. 181—153 **8 Claims**

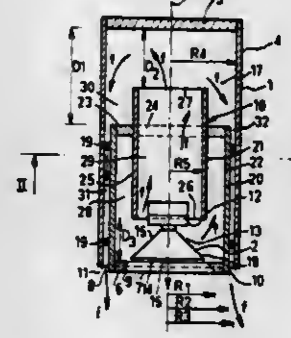

1. A unidirectional speaker enclosure comprising a casing having a rigid cylindrical peripheral wall and a closed rear end, and having at its front end a central primary aperture and a single annular secondary aperture surrounding said primary aperture and adjacent a front end portion of said peripheral wall of the casing, an annular divider separating said secondary aperture from said primary aperture, a speaker mounted centrally in a forward portion of said casing and having a membrane facing said primary aperture, a rigid cylindrical outer partition extending rearwardly from said divider part way to the rear of said casing to define a chamber rearwardly of said speaker and an annular passage between said outer partition and said peripheral wall of said casing, said chamber having a rear wall with a central aperture, and a rigid cylindrical inner partition in said central aperture of said rear wall of said chamber and extending forwardly and rearwardly of said rear wall.

4,298,088

DIFFUSER RESONANCES

Jakob Keller, Fislisbach, Switzerland, assignor to BBC Brown, Boveri & Company, Limited, Baden, Switzerland

Filed Jun. 8, 1979, Ser. No. 46,939

Claims priority, application Switzerland, Jun. 8, 1978, 6272/78

Int. Cl.³ F01N *1/00*

U.S. Cl. 181—211 **9 Claims**

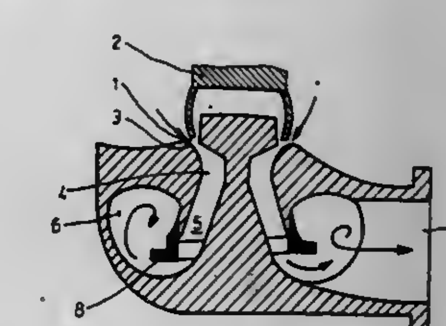

1. A diffuser structure comprising:

a flow path having an inlet and an outlet, the inlet having a cross-sectional flow area which is less than the cross-sectional flow area of the outlet;

a flow-driven resonance positioned immediately upstream of the flow path inlet;

means for modifying the acoustic impedance of the flow path, positioned at the flow path outlet but upstream thereof, including an abrupt change in the cross-sectional flow area of the flow path, and operable to suppress the flow-driven resonance.

4,298,089

VORTEX GENERATORS FOR INTERNAL MIXING IN A TURBOFAN ENGINE

Stanley F. Birch, Bellevue; John A. Lawler, Federal Way, and Gerald C. Paynter, Seattle, all of Wash., assignors to The Boeing Company, Seattle, Wash.

Division of Ser. No. 754,046, Dec. 23, 1976, Pat. No. 4,175,640, which is a continuation-in-part of Ser. No. 563,548, Mar. 31, 1975, abandoned. This application Jun. 28, 1979, Ser. No. 53,126

Int. Cl.³ F02K *1/46*

U.S. Cl. 181—213 **3 Claims**

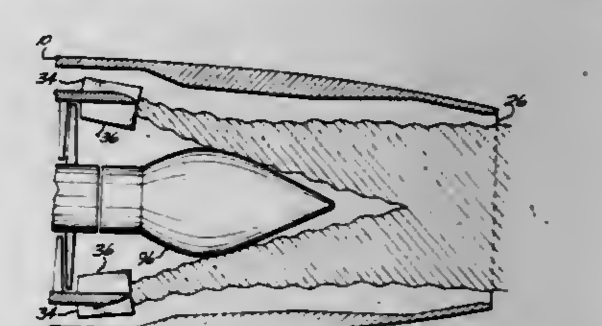

1. In a turbofan engine having an annular fan fluid flow exhaust passageway located between an outer engine cowling and a splitter wall structure, and an annular primary fluid flow exhaust passageway located inside of said splitter wall structure, apparatus for internal mixing of fan exhaust with primary exhaust forward of the nozzle exit plane of said engine comprising:

a vortex generator attached to said splitter wall structure at

least one nozzle diameter forward of said nozzle exit plane and extending radially into one of said annular passageways a distance of at least 30% of the width of the passageway, and mounted to have an angle of attack with respect to the local flow direction ranging from 5° to 25°; and

means for blocking the hot primary exhaust flow core and diverting it so that it mixes with said fan air within the engine forward of said nozzle exit plane and downstream of said vortex generator.

4,298,090
MULTI-LAYER ACOUSTIC LININGS
John F. Chapman, Solihull, England, assignor to Rolls-Royce Limited, London, England
Filed Nov. 6, 1979, Ser. No. 92,089
Claims priority, application United Kingdom, Dec. 27, 1978, 50046/78
Int. Cl.³ E04B *1/82*
U.S. Cl. 181—286 **10 Claims**

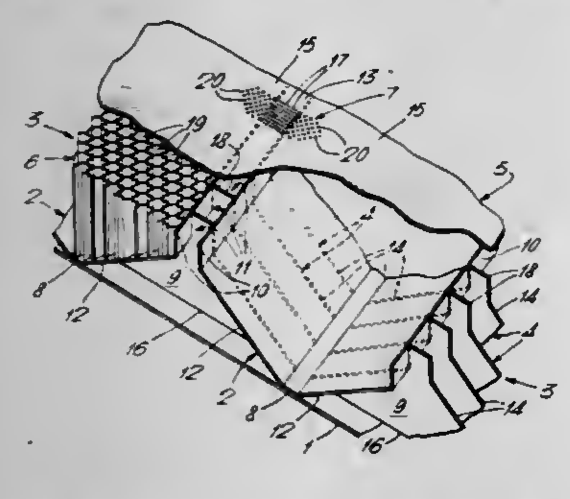

1. A multi-layer acoustic lining for a fluid flow duct comprising:
an impermeable backing layer;
a sound permeable facing layer spaced from said impermeable backing layer;
a plurality of Helmholtz resonators sandwiched between said backing layer and said sound permeable facing layer, said plurality of Helmholtz resonators being defined by a first set of resonator compartments, each of which is acoustically coupled to said sound permeable facing layer by a resonator neck means having a cross-sectional area restrictive relative to the cross-sectional area of the resonator compartments of the Helmholtz resonators;
a plurality of tube-type resonators sandwiched between said backing layer and said facing layer, said plurality of tube-type resonators being defined by a second set of resonator compartments, each of which is acoustically coupled directly to said permeable facing layer; and
partition means providing an acoustic division between at least some of said first set of resonator compartments for said plurality of Helmholtz resonators and said second set of resonator compartments for said plurality of tube-type resonators, said partition means providing at least some of said plurality of tube-type resonators with different resonant frequencies.

4,298,091
SELF ADJUSTABLE HARNESS OR SLING
Jeffrey J. Anderson, P.O. Box 11, Pottersville, N.J. 07979
Filed Jan. 5, 1980, Ser. No. 156,748
Int. Cl.³ A62B *35/00*
U.S. Cl. 182—3 **9 Claims**

1. In a self-adjustable harness for use alternatively as a sling to support a human body or when attached to the shoulders to exert a force on a load, the combination including:
a closed loop of webbing;
a pair of independent rings through which said webbing is loosely slidable;
elongated rope means having one end provided with selectable detachable connector means for attachment to a support or to a load;

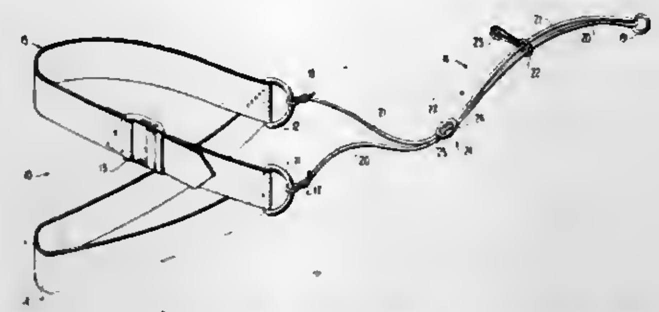

the other end of the rope means having two diverging portions, each being connected to a respective one of said rings, and;
adjustable buckle means for adjusting the lengths of said diverging portions, whereby the rings may subdivide the webbing into two portions each of which partially encircles the same side of a body member when in use.

4,298,092
DEVICE AT UNFOLDABLE ESCAPE-LADDER
Lars O. Eriksson, Sigyns väg 5c, 149 00 Nynäshamn, Sweden
Filed Mar. 11, 1980, Ser. No. 129,349
Int. Cl.³ E06C *1/56*
U.S. Cl. 182—70 **5 Claims**

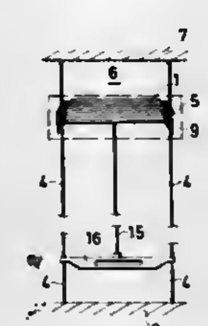

1. A device comprising an unfoldable escape-ladder, which is assembled of rungs (1), the ends (3) of which are attached between flexible lateral members (5), preferably steel wires, which rungs (1) are longish and made of plate-shaped material and can be stacked side against side, and the upper portion of the escape-ladder is intended to be attached to a wall (6), a stay or (1) lying stacked and forming with each of the steel wires (5) a ring for each rung, and which escape-ladder is provided with a means for releasing the ladder, characterized in that two steel wires (4) or rods are provided, which are located in parallel and rigidly attached along the direction, which the ladder in unfolded state is desired to assume, and that said steel wires (4) or rods extend through the rings formed by the firstmentioned steel wires (5).

4,298,093
SAWHORSE
Harold R. Wing, Springville, Utah, assignor to Little Giant Industries, Inc., Provo, Utah
Filed Nov. 16, 1978, Ser. No. 961,341
Int. Cl.³ E04G *1/32;* F16M *11/00*
U.S. Cl. 182—153 **12 Claims**

1. A sawhorse comprising in combination:
a first pair of side rails;
a second pair of side rails hingedly connected to one end of said first pair of side rails to accommodate folding and unfolding of said sawhorse from a folded configuration wherein said side rail pairs are in a side by side position, to an upright configuration and vice versa;

means for locking said first and second side rail pairs in one of said folded or upright configurations;
a third pair of side rails slidably mounted on said first pair of side rails to accommodate vertical extension thereof;
a fourth pair of side rails slidably mounted on said second pair of side rails to accommodate vertical extension thereof;
at least one step mounted between said first side rail pair and at least one step mounted between said third side rail pair;
first means connected to the step mounted between said third side rail pair for locking said third pair of side rails in one or more vertically extended positions relative to said

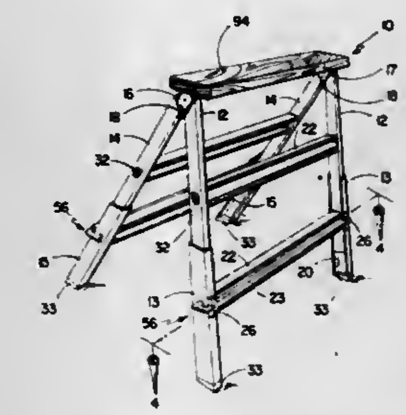

first side rail pair, said first locking means comprising means adapted to be locked into holes formed in the sides of said first side rail pair, said holes being positioned such that the steps mounted between said third side rail pair may be locked into alignment with the steps mounted between said first side rail pair;
second means connected to the step mounted between said fourth side rail pair for locking said fourth pair of side rails in one or more vertically extended positions relative to said second side rail pair; and
a work platform removably mounted atop said first and second side rail pairs.

4,298,094
COLLAPSIBLE SAWHORSE
Munro L. Strong, San Fernando Way, San Francisco, Calif. 94127
Filed Sep. 10, 1980, Ser. No. 185,754
Int. Cl.³ F16M *11/00*
U.S. Cl. 182—155 **6 Claims**

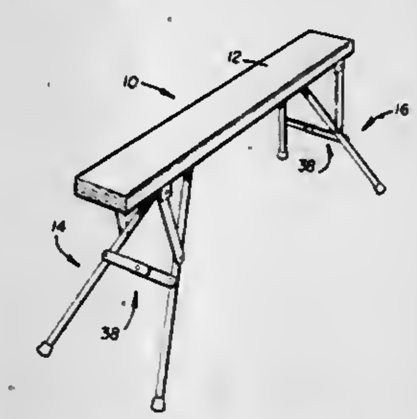

1. A collapsible sawhorse including a beam member and a pair of leg assemblies adapted to support the beam and sawhorse and to be collapsible to a stored position adjacent a surface of said beam, the improvement comprising:
a pair of frame members mounted to the undersurface of said beam member one near each end thereof,
each frame including a generally central rib member at one end thereof and aligned with the longitudinal axis of said beam, a cutout portion in said rib defining a locking hole,
a pair of ears at the opposite end of said frame, said opposite end of said frame being adjacent to an end of said beam,
a pair of braces pivotally mounted at one end to each of said frames at said ears, one brace being mounted to each ear of each frame,
leg members pivotally mounted at a position intermediate the length thereof to the other end of each of said braces so as to establish a pair of legs supported on said frames at each end of said beam,
a doglike structure at one end of each of said legs, said doglike structure being adapted to be positionable within said locking hole in said rib of said frame, said locking hole accommodating said doglike structure from a pair of said legs at each end of said beam,
a collapsible cross member pivotally mounted to said leg members at a position intermediate the length thereof and in the vacinity of said pivotal mounting of said leg members to said braces, said cross member including a self-locking means for spreading said leg members and maintaining said doglike structures within said locking holes,
said frames, braces, leg members and cross members being so mounted to each other at said pivotal mountings to form said leg assemblies and to permit said leg assemblies to be collapsible and positioned adjacent to the surface of said beam where said frame is attached.

4,298,095
WORK SUPPORT FRAME
Ronald A. Jackson, Brockville, and John Maruscak, Athens, both of Canada, assignors to Black & Decker Inc., Newark, Del.
Continuation-in-part of Ser. No. 10,210, Feb. 8, 1979. This application Jan. 17, 1980, Ser. No. 108,449
Int. Cl.³ F16M *11/00;* E04G *1/32*
U.S. Cl. 182—184 **10 Claims**

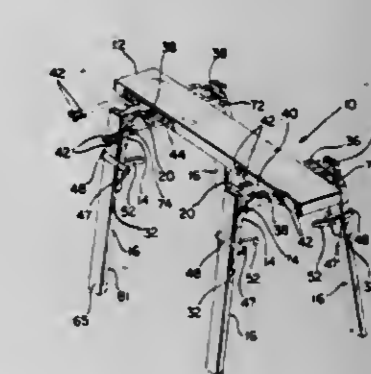

1. In a work support, the improvement which comprises:
(a) a unitary channel member having a top portion to support one end of a plank and further having integral bent leg portions at respective ends thereof,
(b) clamp means on the leg portions for receiving and retaining support legs thereon, and
(c) at least one bracing member carried on the channel member to support the leg in a direction of force opposite that exerted thereon by the clamp means.

4,298,096
CONVERTIBLE TRESTLE LEG ASSEMBLY
Herbert E. Prior, P.O. Box 798, Sebastopol, Calif. 95472
Filed Sep. 15, 1980, Ser. No. 187,562
Int. Cl.³ F16M *11/00*
U.S. Cl. 182—186 **4 Claims**

1. In a trestle leg assembly comprising:
a pair of legs of steel shapes pivoted together at their upper ends, and means including toggle links interconnecting said legs for separating the lower ends of said legs and locking them in separated position;
the improvement comprising:
base plates secured to the upper ends of said legs;

a pair of angle members; and
complementary bolt holes in a horizontal leg of each of said angle members and in each of said base plates;
bolt means for releasably securing one of said angle members to each of said base plates;

said bolt holes being so positioned that when the vertical legs of said angle members are disposed in inboard, back to back positions the space between them is substantially equal to the standard thickness of a length of lumber and when disposed in outboard, face to face positions they will be spaced apart by substantially the width of said lumber.

4,298,097
ESCAPE-LADDER
Lars O. Eriksson, Sigyns väg 5c, 149 00, Nynäshamn, Sweden
Filed Mar. 11, 1980, Ser. No. 129,348
Int. Cl.³ E06C *1/56*
U.S. Cl. 182—198 **4 Claims**

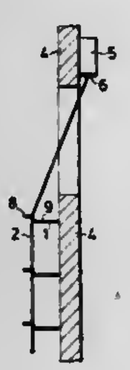

1. An escape-ladder assembled of rungs (1), the ends (3) of which are attached between flexible lateral members (2), preferably steel wires, which rungs (1) are longish and of plate-shaped material and can be stacked side against side, the upper portion of the escape-ladder intended to be attached to a wall (4), a stay or the like, which escape-ladder in folded state has its rungs (1) lying stacked and each of the steel wires (2) forming a ring for each rung (1), characterized in that each rung (1) has substantially S-shaped cross-section, where the free ends of the S-shaped portion (7) are extended so as to form parallel upper and lower legs (8,9), and that the steel wires (2) are attached on the rungs (1) with their substantial longitudinal direction perpendicularly to said legs, so that in unfolded state of the ladder the upper one (8) of said legs constitutes a tread and the lower one (9) constitutes a distance member for maintaining the ladder at a certain distance from a wall (4) or the like, along which the ladder is unfolded.

4,298,098
LUBE PLUG
Leo Stella, Bristol, Conn., assignor to The Torrington Company, Torrington, Conn.
Filed Oct. 25, 1979, Ser. No. 87,949
Int. Cl.³ F01M *11/00*
U.S. Cl. 184—105 B **5 Claims**

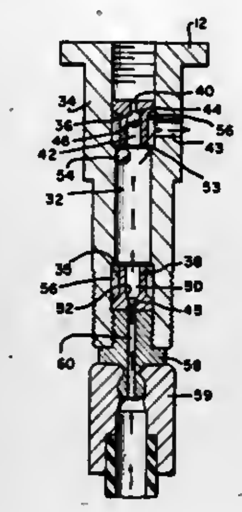

1. In a cam follower containing lubricant: an inner member; an outer member of greater inside diameter than the outside diameter of the inner member thus providing an annular space between the inner member and the outer member; a plurality of rolling members in the annular space, said inner member having a longitudinal lubrication bore and a cross-hole extending radially from the longitudinal lubrication bore to the annular space; and plug means in the longitudinal bore located to seal the lubricant; said plug means including a plug having enough stiffness to normally remain in its original position but resilient enough to be moved from its original position by the application of lubricant pressure.

4,298,099
MERCHANDISE ORDER PICKING SYSTEM AND WORK TABLE
Harold Isaacs, 2567 Lafayette Dr., University Heights, Ohio 44118
Filed May 12, 1978, Ser. No. 905,429
Int. Cl.³ B61D *15/00*
U.S. Cl. 186—58 **7 Claims**

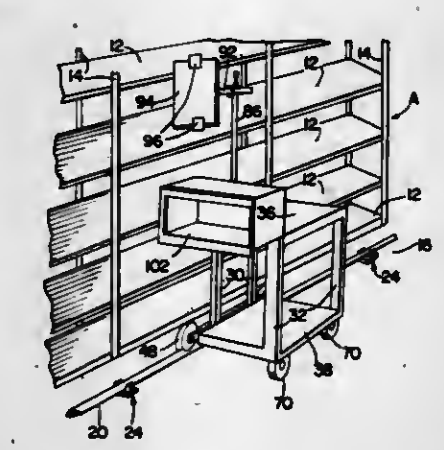

4. A mobile work table for an order picking system or the like, said table having opposite inboard and outboard sides and opposite ends;
(a) vertically-spaced upper and lower substantially horizontal rectangular panels each having an outer periphery and inboard and outboard corners;
(b) a pair of outboard upright frame members extending between said panels adjacent said outboard corners thereof and being welded thereto against said outer periphery of each said panel;
(c) a pair of inboard upright frame members extending between said upper and lower panels adjacent said inboard corners thereof and being welded thereto against said outer periphery of each said panel;
(d) said inboard upright frame members being welded to said panels on said inboard side of said work table and being spaced substantially inwardly from said inboard corners;
(e) an elongated substantially horizontal frame member secured to said inboard upright frame members against the surfaces thereof facing outwardly of said inboard side of said work table;
(f) a pair of outboard wheels secured to the underside of said lower panel adjacent said outboard side of said work table for rotation about outboard wheel axes extending parallel to said work table ends;
(g) a pair of spaced-apart inboard wheels secured to said horizontal frame member adjacent the opposite ends thereof for rotation on inboard wheel axes extending parallel to said outboard wheel axes;
(h) said inboard wheel axes being spaced above said outboard wheel axes; and
(i) said inboard wheels having circumferential track receiving grooves therein of generally arcuate cross-sectional shape.

4,298,100
SWITCHING APPARATUS FOR A GROUP OF ELEVATORS OR THE LIKE
Hans G. Süss, Udligenswil, and Jiri Kiml, Ebikon, both of Switzerland, assignors to Inventio AG, Hergiswil, Switzerland
Filed Nov. 23, 1979, Ser. No. 96,982
Claims priority, application Switzerland, Dec. 12, 1978, 12630/78
Int. Cl.³ B66B *1/20*
U.S. Cl. 187—29 R **8 Claims**

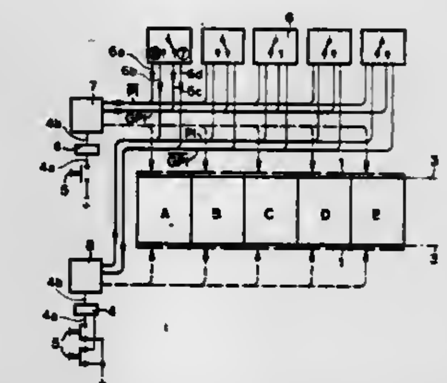

1. In a switching apparatus for a group of elevators containing devices for the control mode collective control and the control mode individual travel control and having automatic elevator cabin doors and wherein there are provided storey call storages controllable by means of storey call transmitters which are correlated to each control mode, comprising:
said control mode collective control being operatively correlated to a first access side of the elevators and the control mode individual travel control to a second access side of the elevators;
said first switching stage producing two non-equivalent signals preventing the allocation of the storey calls correlated to the operating mode which is to be turned-off to the elevator which is to be switched;
said first switching stage containing an input side and an output side;
a second switching stage having an input side connected with the output side of the first switching stage;
said second switching stage comprising logic circuitry for processing the non-equivalent signals;
means for infeeding input information to the second switching stage which signals one of the operating modes of the elevator cabin;
said second switching stage having an output;
a third switching stage having an input side connected with the output of the second switching stage;
said third switching stage having infed thereto a first output signal produced upon switching in the second switching stage;
said second switching stage producing a second output signal and third output signal which by freeing a related door control of the elevator causes allocation of the elevator to the selected operating mode when said infeeding means infeeds input information signaling the operating mode "free" of the elevator to be switched;
said third switching stage having an output side and containing a timing element which after expiration of a predetermined control time, prior to allocation of the elevator to the other operating mode, produces a signal interrupting the cabin call transmitter supply; and
a fourth switching stage connected with the output side of the third switching stage for producing further signals, by means of which, after servicing the last cabin call located in the momentary direction of travel of the elevator cabin, extinguishes the still stored cabin calls and blocks the door closing operation until emptying of the elevator cabin.

4,298,101
SHOCK ABSORBER
Richard G. Dressell, Jr., Livonia, and Robert J. Heideman, Westland, both of Mich., assignors to Enertrols, Inc., Livonia, Mich.
Filed Oct. 5, 1979, Ser. No. 82,190
Int. Cl.³ F16F *9/44*
U.S. Cl. 188—285 **7 Claims**

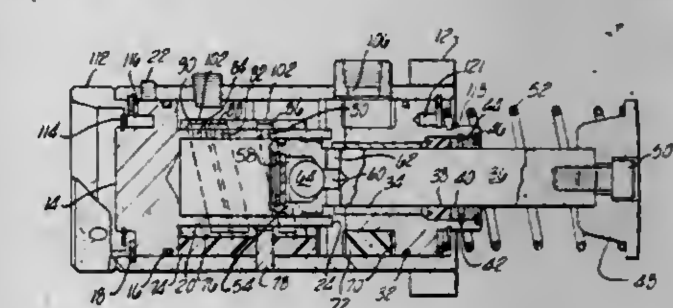

1. A device for applying a force to a moving member so as to decelerate the member, comprising:
a tubular cylinder having a plurality of ports formed through its wall which are spaced relative to one another along the longitudinal axis of the cylinder;
a piston slidable within the cylinder and means for mounting said cylinder and said piston with respect to said moving member to cause said piston to slide in said cylinder by movement of said member;
a sleeve having an interior wall surrounding the cylinder and having a number of holes formed in it equal to the number of ports formed through the cylinder and spaced relative to one another longitudinally along the length of the sleeve at the same spacing as the port in the cylinder, and further having a plurality of corresponding grooves formed in the interior wall of the sleeve, each groove being in substantial alignment with one of the holes in the sleeve, each groove being of substantially constant cross sectional configuration and having a cross sectional area greater than the area of said cylinder ports;
each of said grooves extending transversely to the radial planes of said sleeve, said sleeve disposed over said cylinder and said sleeve and grooves located so that each groove overlies a respective one of said cylinder ports to a varying degree as said sleeve and cylinder relative angular position is shifted by relative rotation therebetween;
a volume exterior to said sleeve, the holes in said sleeve providing fluid communication with said groove and the exterior volume.

4,298,102

SHOCK ABSORBER FOR VEHICLE USE

Masao Nishikawa, Tokyo, and Hitoshi Yamamoto, Asaka, both of Japan, assignors to Honda Giken Kogyo Kabushiki Kaisha, Tokyo, Japan

Continuation of Ser. No. 877,851, Feb. 15, 1978, abandoned. This application Nov. 6, 1979, Ser. No. 91,766

Claims priority, application Japan, Mar. 22, 1977, 52-31333

Int. Cl.³ F16F *9/44*

U.S. Cl. 188—319 **7 Claims**

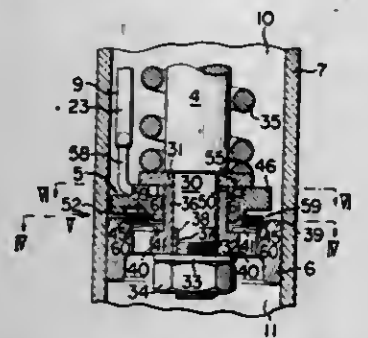

1. An improved shock absorber for vehicle use of the type having in combination, a cylinder filled with hydraulic oil and a piston slidably fitted therein, being formed with a piston rod, and arranged between members of a vehicle suspension system, respectively associated with the body of the vehicle and a wheel assembly thereof, said cylinder having a head portion supported on one of said members and a free end portion of said piston rod supported on the other of said members, to thereby moderate the force of impact due to relative movement between said members, first and second oil chambers defined in said cylinder by said piston; at least one oil passage formed in said piston extending therethrough to communicate with said first and second oil chambers; said improvement comprising: a valve mechanism provided in association with said piston for controlling the flow of oil through said oil passage; and adjusting mechanism for adjusting the operating characteristic of said valve mechanism from outside of said cylinder; said valve mechanism being defined by: a resilient plate-like valve element arranged in a position adjacent to one of the end openings of said oil passage responsive to an oil pressure differential between said first and second oil chambers; valve-element support means movable in response to deflection of said valve element for holding the latter in a closed position as long as the amount of deflection of said valve element is not greater than a preset value and adapted to be held against any further movement, said valve element being adapted to assume an open state with clearance defined between said valve-element support means and at least part of the peripheral region of said valve element in (59,59', 104) correspondence with the amount of deflection of said valve element when the amount of deflection of said valve element exceeds said present valve, orifice means for allowing a preset flow of oil through said oil passage when said valve element is in a closed position; and control means adapted to selectively limit the extent of movement of said valve-element support means by said adjusting mechanism; said valve element is further defined as an annular valve member formed of resilient sheet material and arranged coaxially with said piston, in which said valve-element support means is defined by a first annular valve-seat member for supporting the outer peripheral edge portion of said valve element on one face thereof and a second annular valve-seat member for supporting the inner peripheral edge portion of said valve element on the other face thereof; one of said valve-seat members has controlling surfaces arranged thereon along a circle concentric with and of a different radius from the annular valve seat thereof, said controlling surfaces respectively increasing successively in height at a fixed rate in a circumferential direction of the valve-seat member while the other valve-seat member has feet means formed thereon along a circle concentric with and different in radius from the annular valve seat thereof, in positions corresponding to said controlling surfaces which are of the same height, including one in each of said controlling surfaces, said feet means extending the same direction from said other valve-seat member toward said controlling surfaces and in which said one valve-seat member is arranged for rotation about the axis of said valve-element support means, the axial distance of said feet from said controlling surfaces is varied uniformly when said one valve-seat member is rotated relative to the other valve-seat member by said adjusting mechanism and an adjusting-torque transmitting spring is provided which is held in integral engagement with said second annular valve-seat member, including at least one projecting portion and one engaging portion engageable with a driver element of said adjusting mechanism, said projecting portion being formed so as to resiliently fall into a selected one of a plurality of recesses formed in the outer peripheral surface of said piston rod or of a member restrained thereon, so as to be rotatable relative thereto in positions circumferentially adjacent to each other, as said second valve-seat member is rotated relative to said first valve-seat member by operation of said adjusting mechanism.

4,298,103

COMBINATION PORTABLE STORAGE CONTAINER AND HEAD REST

Donald De Fries, 5223 North Oakview, Chicago, Ill. 60656

Continuation-in-part of Ser. No. 937,894, Aug. 29, 1978, Pat. No. 4,222,468. This application Apr. 14, 1980, Ser. No. 139,904

Int. Cl.³ A45C *3/10*

U.S. Cl. 190—42 **9 Claims**

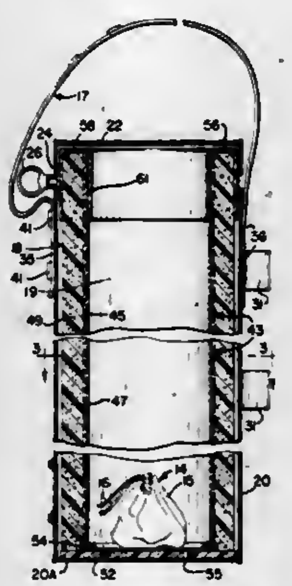

1. In a combination portable storage container and head rest, a hollow elongated rigid tubular member, an elongated outer resilient tubular member axially aligned with and surrounding said inner rigid member, an elongated covering enclosing said outer resilient member, said covering having openable means for permitting access to the interior of said hollow elongated rigid tubular member, the combination comprising: said rigid member having an opened top cylindrical body portion, said body portion having a rigid bottom wall, said cylindrical body portion being composed of paper stock material, said rigid member including a rigid collar surrounding the opened-top end of said body portion.

4,298,104

LUGGAGE HANDLE HAVING RELEASABLE LOCKING ASSEMBLY

Henry Leong, 6 Waller Ct., Kendall Park, N.J. 08824

Filed Dec. 17, 1979, Ser. No. 104,356

Int. Cl.³ A45C *13/26*

U.S. Cl. 190—48 **15 Claims**

1. Portable carrying means comprising a carrying portion having a pair of supple flaps integral with said carrying portion, each flap having an opening;

a handle assembly comprising first and second handle sub-assemblies each being integrally joined to one of said flaps;

each handle sub-assembly having an opening aligned with the opening in the associated flap;

said first and second sub-assemblies including first and second locking means respectively for releasably locking said first and second sub-assemblies to one another;

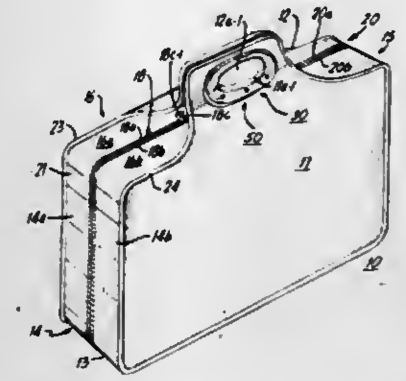

said first locking means comprising a guidance opening having a locking recess; and

said second locking means comprising an alignment projection for insertion into said guidance opening and a locking projection for releasable engagement with said locking recess.

4,298,105

CONTROL VALVE MECHANISM FOR A POWER TRANSMISSION

Michael L. Duhaime, Detroit, Mich., assignor to General Motors Corporation, Detroit, Mich.

Filed Nov. 16, 1979, Ser. No. 94,692

Int. Cl.³ B60K *41/24*

U.S. Cl. 192—3.23 **4 Claims**

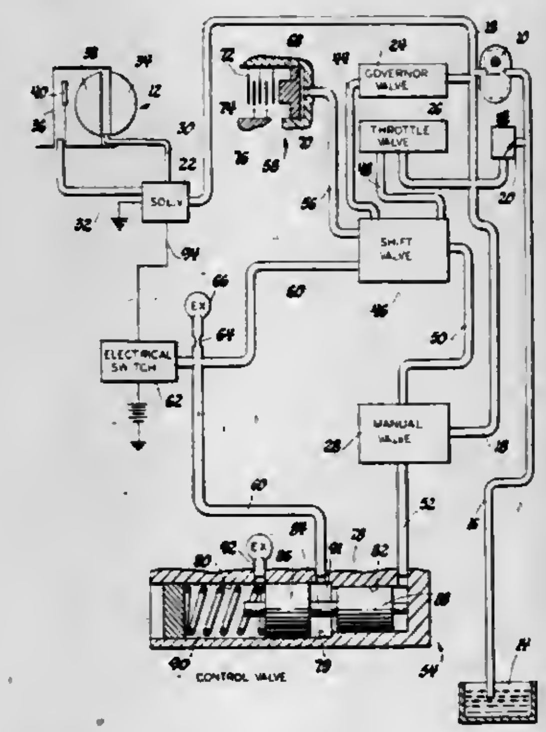

1. A control valve for use in a power transmission having a pair of friction drive establishing means, one of which drive establishing means is controlled by an electrically-operated solenoid valve and the other of which drive establishing means is controlled by a hydraulically-operated shift valve, said control valve comprising; a stepped valve bore, a differential area spool valve slidably disposed in the stepped valve bore and a passage means interconnecting the hydraulic shift valve and the differential area of said valve spool, a restricted exhaust being interconnected with said passage means; and electrical switch means connected in said passage means upstream of said restricted exhaust and being pressure-activated to assume an actuated position to control the solenoid valve to disengage said one drive establishing means, said passage means being operable to provide a controlled pressure outlet in cooperation with said valve spool and said restricted exhaust for said other drive establishing means such that on disengagement of said other drive establishing means the pressure within said passage means is initially increased sufficiently to actuate said switch means and after a predetermined time the pressure therein is reduced through said restricted exhaust to permit said switch means to return to its unactuated condition.

4,298,106

METHOD AND APPARATUS FOR BRAKING TORQUE AMPLIFIER

Jerry D. Elijah, 209-8th Street, Tipton, Iowa 52772

Filed Feb. 22, 1979, Ser. No. 14,046

Int. Cl.³ B60K *41/22*

U.S. Cl. 192—3.57 **2 Claims**

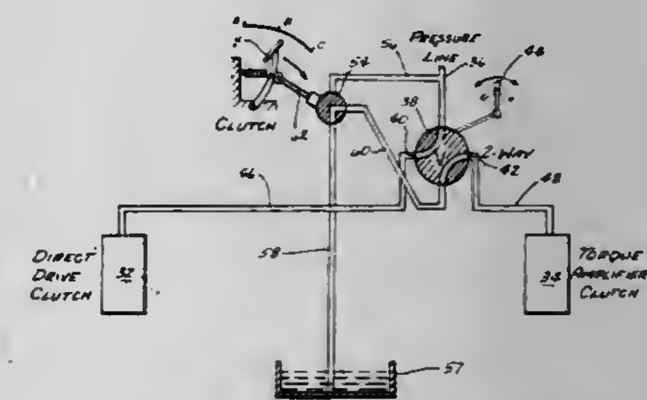

1. A braking device for a torque amplifier comprising: an engine;

a first drive shaft;

an engine clutch for alternatively connecting and disconnecting said engine to said first drive shaft;

a direct drive gear rotatably mounted on said first drive shaft;

a direct drive clutch associated with said direct drive gear for selectively coupling and uncoupling said direct drive gear to said first drive shaft;

a torque amplifier gear rotatably mounted on said first drive shaft;

a torque amplifier clutch associated with said torque amplifier gear for selectively coupling and uncoupling said torque amplifier gear to said first drive shaft;

a first transmission shaft having a driven direct drive gear and a driven torque amplifier gear fixed thereto in meshing engagement with said direct and torque amplifier gears, respectively,

torque amplifier control means connected to said torque amplifier clutch and said direct drive clutch for controlling the coupling and uncoupling thereof to said first drive shaft;

said torque amplifier control means comprising a torque amplifier valve connected to a source of hydraulic pressure, first and second conduits connecting said torque amplifier valve to said torque amplifier clutch and said direct drive clutch respectively, a brake control valve, a third conduit interconnecting said torque amplifier valve and said brake control valve and a fourth conduit interconnecting said brake control valve and said source of hydraulic pressure;

said torque amplifier valve being movable to a first position connecting one of said first and second conduits to said source of hydraulic pressure and the other of said first and second conduits to said brake control valve, through said third conduit;

said torque amplifier valve being further movable to a second position connecting said other of said first and second conduits to said source of hydraulic pressure and said one of said first and second conduits to said brake control valve through said third conduit, and

said brake control valve being movable from a closed posi-

tion closing off said source of hydraulic pressure from said fourth conduit to said third conduit to an open position connecting said source of hydraulic pressure from said fourth conduit to said third conduit only when said engine clutch has disengaged said engine from said direct drive shaft;

whereby said torque amplifier clutch and said direct drive clutches are both actuated when said brake control valve is in said open position, thereby causing said direct drive gear and said torque amplifier gears both to be fixed to said first drive shaft, the resulting difference in gear ratios of said direct drive and torque amplifier gears causing said direct drive and said transmission shafts to stop rotating.

2. An improved braking device for a torque amplifier comprising a drive shaft and a transmission shaft, a direct drive gear and a torque amplifier gear rotatably mounted on said drive shaft, a driven direct drive gear and a driven torque amplifier gear fixed to said transmission shaft and intermeshing with said direct drive and torque amplifier gears, respectively; a direct drive clutch associated with said direct drive gear and a torque amplifier clutch associated with said torque amplifier gear for selectively coupling and uncoupling said direct drive gear and said torque amplifier gear, respectively, to said drive shaft; control means for selectively actuating said direct drive and torque amplifier clutches one at a time to couple said direct drive gear and said torque amplifier gear, respectively, to said transmission shaft one at a time; said control means comprising hydraulic circuitry connected to said direct drive and torque amplifier clutches and a first valve movable from a first position directing pressurized hydraulic fluid to only said direct drive clutch to a second position directing hydraulic fluid only to said torque amplifier clutch;

said improved braking device comprising:

a brake control valve connected to said source of hydraulic pressure;

hydraulic connecting means interconnecting said brake control valve and said first valve;

said first valve interconnecting said connecting means to said torque amplifier clutch when said first valve is in said first position and connecting said connecting means to said direct drive clutch when said first valve is in said second position;

said brake control valve being selectively movable from a first position connecting said pressure source to said connecting means to a second position disconnecting said pressure source from said connecting means whereby both of said torque amplifier and direct drive clutches will be actuated whenever said brake control valve is in said first position, independently of whether said first valve is in its said first or second positions.

4,298,107

BRAKE SYSTEM FOR A TEXTILE MACHINE

Gerd Schmitz, Sulz/Attikon, and Otto Hintsch, Wallisellen, both of Switzerland, assignors to Sulzer Brothers Limited, Winterthur, Switzerland

Filed Dec. 3, 1979, Ser. No. 99,476

Claims priority, application Switzerland, Dec. 6, 1978, 12476/78

Int. Cl.³ F16D *67/02, 71/00, 65/36*

U.S. Cl. 192—12 D **26 Claims**

1. In combination with a textile machine having a plurality of individual operating components and a main drive for actuating and driving each said component; a brake system including at least two brake elements, each said brake element being selectively connected to a respective component to effect braking thereof and each brake element having a different braking characteristic relative to the other of said brake ele-

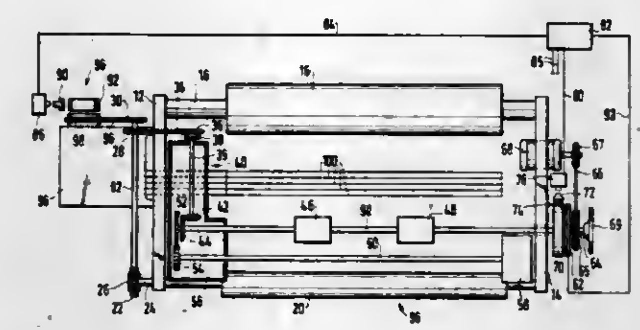

ments, and a common control means for actuating said brake elements.

4,298,108

BRAKE-CLUTCH INTERLOCK

Wayne R. Hutchison, Mayville, Wis., assignor to Deere & Company, Moline, Ill.

Filed Oct. 9, 1979, Ser. No. 83,040

Int. Cl.³ F16D *67/02;* **B60K** *41/24*

U.S. Cl. 192—13 R **4 Claims**

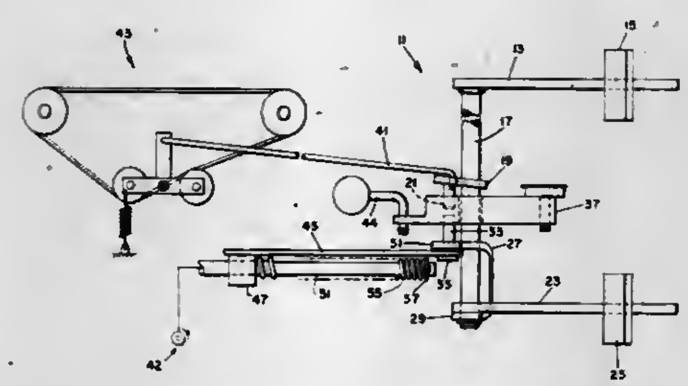

1. A vehicle brake-clutch interlock mechanism comprising;

(a) a clutch arm;

(b) a crossbar fixably mounted to one end of said clutch arm;

(c) a clutch linking arm fixably mounted to said crossbar and extending generally perpendicular therefrom;

(d) first means for communicating said linking arm to said vehicle's clutch such that rotation of said clutch arm will cause said vehicle's clutch to disengage;

(e) first locking pin fixably mounted to said clutch linking arm and extending generally perpendicular therefrom;

(f) a brake arm rotatably mounted to said crossbar;

(g) a brake linking member fixably mounted to said brake arm and rotatable with said brake arm with respect to said crossbar;

(h) second locking pin fixably mounted to said brake linking member;

(i) second means for communicating said linking member to said vehicle brake such that rotation of said brake arm causes engagement of said vehicle's brakes;

(j) interlocking means for restrainable engagement of said first and second locking pins such that said vehicle's brake is engaged and said vehicle's clutch assembly is disengaged, said interlocking means cannot singularly engage or disengage said first and second locking pins.

4,298,109

CONTROL SYSTEM FOR AN AUTOMATIC VEHICLE TRANSMISSION

Heinz Dörpmund, Wolfsburg, and Gerd Oberpichler, Braunschweig, both of Fed. Rep. of Germany, assignors to Volkswagenwerk Aktiengesellschaft, Wolfsburg, Fed. Rep. of Germany

Filed Jul. 26, 1979, Ser. No. 60,876

Claims priority, application Fed. Rep. of Germany, Oct. 6, 1978, 2843615

Int. Cl.³ F16D *67/00*

U.S. Cl. 192—0.044 **9 Claims**

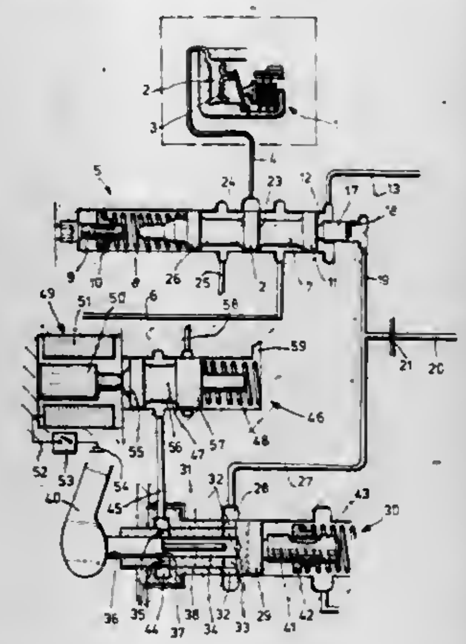

1. In an automatic transmission for a motor vehicle, having an accelerator pedal and a brake pedal, said transmission having hydraulically actuatable gear shift elements, a gear select lever having a plurality of selectable forward drive positions, including automatic forward drive (D), a source of first pressurized hydraulic fluid, and a manual control valve, responsive to the position of said select lever, for supplying said first fluid to a selected gear shift element when said lever is in one of said forward drive positions, a control system for selectively interrupting the supply of said first fluid to said selected element comprising a main control valve for controlling the supply of said first fluid from said manual control valve to said selected element, means for providing a second fluid pressure for acting on said main control valve for connecting the supply of said first fluid to said element for engaging said element, and a purging control valve means responsive to the position of said accelerator pedal for venting the second fluid pressure supplied to said main control valve when the accelerator pedal is released, to discontinue said first fluid supply and exhaust the fluid from said element to disengage said element, the improvement comprising means responsive to the position of said brake pedal for controlling said main control valve for permitting said element to disengage only when said brake pedal is depressed.

4,298,110

TWO-SPEED CLUTCH WITH NEUTRAL

John W. Toma, Louisville, Ky., assignor to General Electric Company, Louisville, Ky.

Filed Jan. 7, 1980, Ser. No. 110,170

Int. Cl.³ F16D *43/18, 43/30, 21/08*

U.S. Cl. 192—48.4 **16 Claims**

1. A two-speed clutching arrangement producing a driving connection between a rotary input means and a rotary output means in a plurality of drive modes, including a first mode in which said rotary output means is driven at the same rotative speed as said rotary input means; a second mode in which said rotary output means is driven by said rotary input means at a reduced speed, said clutching arrangement comprising:

a rotatably supported inner drum;

means producing a driving connection between said rotary input means and said inner drum;

an outer drum mounted over said inner drum, said outer drum comprising said rotary output means;

slip clutch means interconnecting said inner drum and said outer drum, said slip clutch means including means establishing a driving connection between said inner drum and said outer drum producing a lesser rate of rotation of said outer drum than said inner drum to thereby produce said reduced drive between said rotary input means and said outer drum;

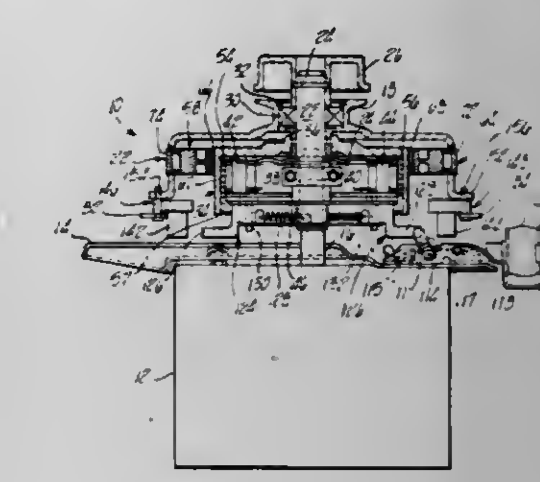

direct drive clutch means interconnecting said inner drum and said outer drum, said direct drive clutch means including at least one clutch shoe and means mounting said at least one clutch shoe to one of either said inner drum or outer drum at one end thereof to be centrifugally moved by rotation of said one of said inner drum or outer drum to produce a driving engagement with the other of said inner drum or outer drum, whereby centrifugal engagement of said at least one clutch shoe produces a direct drive connection between said inner drum and said outer drum.

4,298,111

VISCOUS FLUID COUPLING DEVICE

Masaharu Hayashi, Toyota, Japan, assignor to Aisin Seiki Kabushiki Kaisha, Kariya, Japan

Filed Nov. 7, 1979, Ser. No. 91,921

Claims priority, application Japan, Nov. 16, 1978, 53/141809

Int. Cl.³ F16D *35/00, 43/25*

U.S. Cl. 192—58 B **5 Claims**

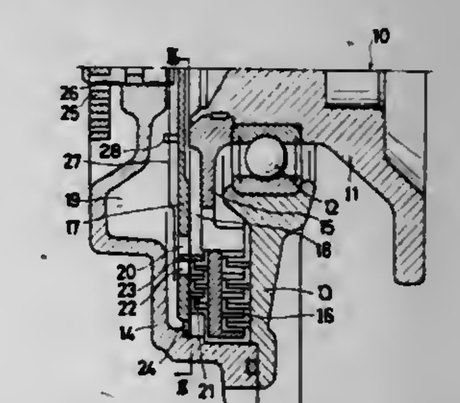

1. A viscous fluid coupling device, comprising:

an input member driven by a vehicle engine and having a rotor thereon,

an output member rotatably supported on said input member,

a partition plate member dividing the interior of said device into an operating chamber for accommodating said rotor and a reservoir chamber for the viscous fluid,

labyrinth means between said input member and said output member,
aperture means in said rotor radially inwardly of said labyrinth means to provide fluid communication between opposite sides of said rotor,
first passage means for sending the viscous fluid from said operating chamber to said reservoir chamber,
second and third passage means formed on said partition plate member for communicating said viscous fluid from said reservoir chamber to said operating chamber,
a partition wall integrally formed with said partition plate member at the radially inner end of said labyrinth means for directing the flow of fluid passing through said first and second passage means to said labyrinth means, and
thermal responsive means for opening and closing said second and third passage means responsive to the change of temperature.

4,298,112
SIX LEVER RACING CLUTCH
Franklin E. Carstensen, Garden Grove, Calif., assignor to American Industries Inc., Cleveland, Ohio
Filed Dec. 19, 1979, Ser. No. 105,316
Int. Cl.³ F16D *13/44*
U.S. Cl. 192—70.29 12 Claims

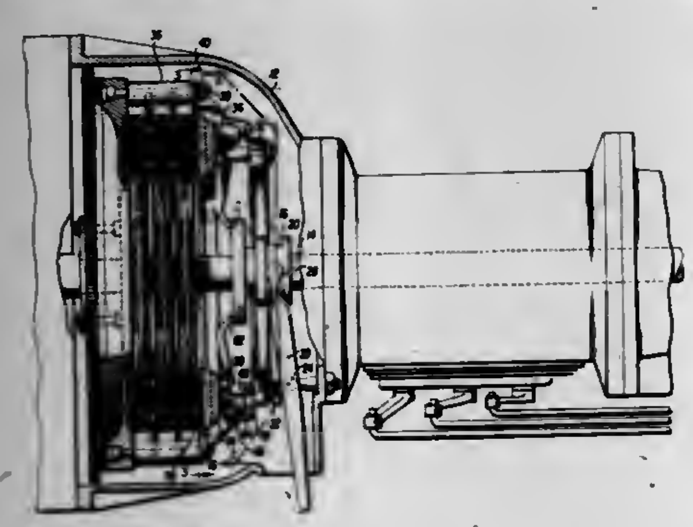

1. In a clutch having
a plurality of lever arms in a circular array, each pivoting about a yoke pivot pin which is maintained in a yoke holding element that extends about each side of the lever arm, and
a pressure plate forging driving lug also engaging each lever arm, the improvement comprising using as the lever arm a long lever arm comprising
a generally flat main longitudinal element having a top beam surface that extends in a generally straight line parallel to the longitudinal direction of the main element with one end defining an inner end and the opposite end defining an outer end;
an upwardly extending release bearing point element at the inner end of the main element;
an upwardly extending centrifugal point of adjustment element at the opposite outer end having a hole extending therethrough;
a yoke pivot pin hole in the main element positioned so the amount of weight of the lever on either side is about equal; and
a pressure plate forging pivot hole in the main element positioned between said centrifugal point of adjustment element and said yoke pin pivot hole, said yoke pivot pin and pressure plate forging pivot pin holes being positioned so a line connecting their centers is parallel to the line of said top beam surface.

4,298,113
DRIVE SYSTEM FOR GRINDING MILLS
Marvin B. Shaver, Beaconsfield; Robert M. Vadas, Dorval, and Norman A. Stock, Lachine, all of Canada, assignors to Dominion Engineering Works Limited, Lachine, Canada
Filed Mar. 20, 1978, Ser. No. 888,017
Claims priority, application Canada, May 5, 1977, 277773
Int. Cl.³ F16D *41/02, 41/28, 43/20*
U.S. Cl. 192—0.094 6 Claims

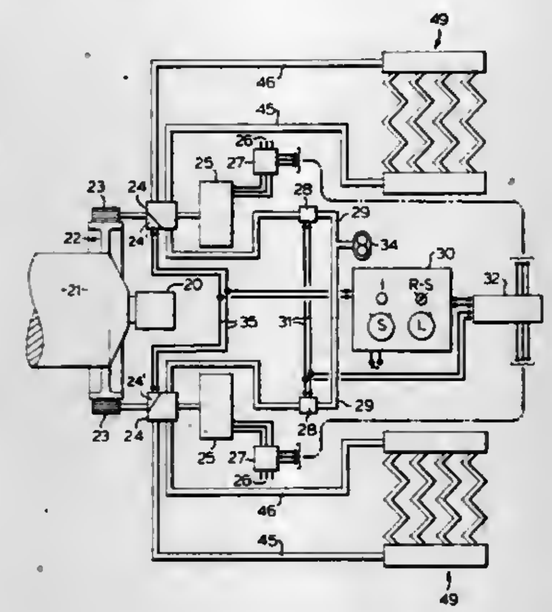

1. A drive control arrangement, for use with a grinding mill having a drum mounted for rotation on bearing means, a driven gear secured to the drum, twin pinions supported in driving relation with the driven gear, each having an electric motor in driving relation therewith wet clutch means interposed in selective connecting relation between at least one of the said pinions and the related said motor and being generally operative in non-slipping relation therebetween, said wet clutch means including an external coolant circuit to dissipate heat generated in the clutch means, and control means operable to control and selectively interrupt said non-slipping relation including pressure responsive means to control the output torque of the clutch means, pressure sensing means for sensing said clutch control pressure, and pressure control means to limit said pressure to a value corresponding to a predetermined value of torque.

4,298,114
CONTROL CIRCUIT FOR A PRESS
Shunichi Nagai, and Hidekazu Higashi, both of Komatsu, Japan, assignors to Kabushiki Kaisha Komatsu Seisakusho, Tokyo, Japan
Filed Jul. 16, 1979, Ser. No. 58,071
Claims priority, application Japan, Dec. 29, 1978, 53-163940
Int. Cl.³ B30B *15/14*
U.S. Cl. 192—129 A 9 Claims

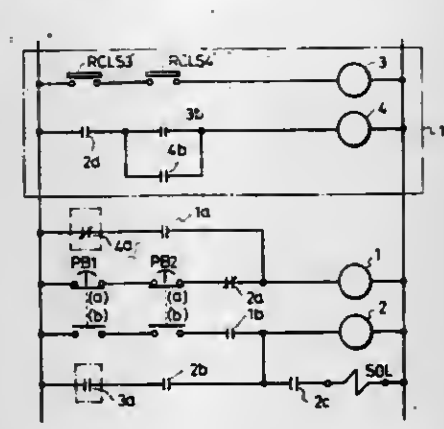

1. A control circuit for a press comprising:
a rotary cam switch which, during each revolution, is closed

at a first slide stroke angle and opened at a second slide stroke angle before a top dead center position of the press;
an operating switch which is moved from a stop position to a run position for starting the press;
a first relay circuit which is not energized when the press is started and is energized upon the closing of said rotary cam switch and self-held thereafter;
a second relay circuit which is energized through the operating switch prior to the starting of the press, is self-held after starting of the press until said rotary cam switch is closed and is deenergized by the closing of said rotary cam switch;
a third relay circuit which is energized by moving the operating switch to the run position when the press is not in operation, is deenergized by moving the operating switch to the stop position before the press reaches the first slide stroke angle, is energized and self-held in a stroke angle range between the first slide stroke angle and the second slide stroke angle and is deenergized by deenergization of said second relay circuit after the press reaches the second slide stroke angle even if the operating switch is in the run position, wherein the rotary cam switch controls the energization of the first, second and third relay circuits; and
drive means for driving the press by energization of said third relay circuit.

4,298,115
TIME-LAPSE INDICATOR
Robert F. Bradley, and Lindell P. Bradley, both of New Buffalo, Mich., assignors to Micro-Circuits Company, New Buffalo, Mich.
Filed Feb. 9, 1979, Ser. No. 10,688
Int. Cl.³ G04F *13/00;* G07F *9/02*
U.S. Cl. 194—4 F 21 Claims

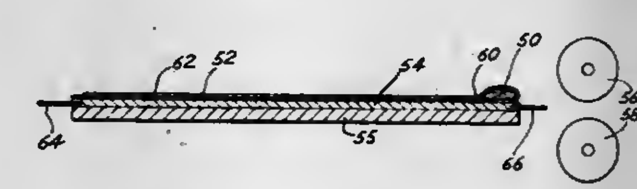

1. A time-lapse indicator comprising a layer of fluid-absorbent material, a particulated electrically conductive material disposed in said fluid-absorbent layer for rendering said layer electrically conductive, a means for holding a fluid in close proximity to said absorbent layer, a fluid migrating at substantially a predetermined rate to said absorbent layer from said holding means, said fluid when absorbed by said absorbent layer varying the conductivity of the absorbent layer in proportion to the degree of absorption of the fluid by the absorbent layer, with the degree of change in conductivity of said absorbent layer being related to the time duration of exposure of said fluid absorbent layer to said fluid to determine the time-lapse following commencement of the fluid transmittal, and a rupturable barrier means separating said fluid from said absorbent layer until said indicator is activated.

4,298,116
STRING DETECTOR FOR A COIN-SELECTING DEVICE
John F. Niemeyer, St. Louis, Mo., assignor to Coin Acceptors, Inc., St. Louis, Mo.
Filed Oct. 17, 1979, Ser. No. 85,582
Int. Cl.³ G07F *1/00*
U.S. Cl. 194—97 R 6 Claims

1. A string detector for a coin-selecting device, comprising:
(a) a switch means conditioned to a first state by engagement with and passage of a coin and maintained in the first state by engagement with a string attached to a coin inserted into the device, and conditioned to a second state by disengagement from and passage of a coin in the absence of a string,
(b) coin validation means normally conditioned to a first state, and conditioned to a second state by a valid coin, and

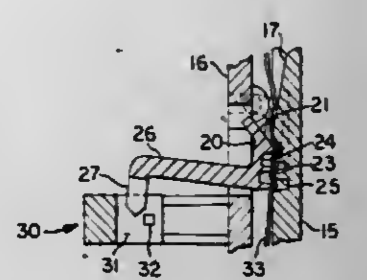

(c) means operatively interconnecting the switch means and coin validation means for determining the handling of the coin depending upon the state of the switch means and coin validation means.

4,298,117
APPARATUS FOR DISCHARGING ARTICLES FROM CONVEYOR BELTS
Takuo Kobayashi, Nishinomiya, and Yasuyuki Takashima, Osaka, both of Japan, assignors to Sandvik Conveyor GmbH, Fellbach, Fed. Rep. of Germany
Continuation of Ser. No. 824,120, Aug. 12, 1977, abandoned. This application Apr. 30, 1979, Ser. No. 34,763
Claims priority, application Japan, May 21, 1976, 51-59327
Int. Cl.³ B65G *47/46, 47/74*
U.S. Cl. 198—367 11 Claims

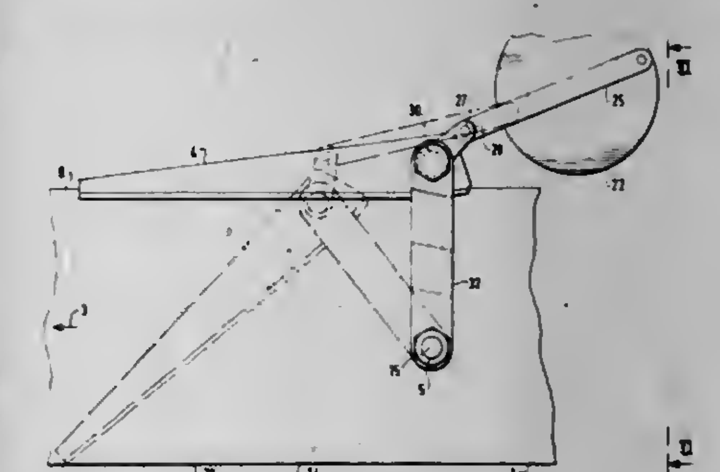

1. In a conveyor system wherein articles are placed upon the article-conveyor run of a conveyor belt and are moved along a path which extends past a plurality of discharge stations at which the articles are selectively discharged from the conveyor, article-discharging means at one of said stations comprising a diverter which is adapted to be moved between a retracted position adjacent one edge of but outside said path of said belt and an extended position wherein it presents an article-diverting surface extending across said path substantially between the side edges of said belt at an angle to the direction of belt movement whereby articles being carried by the belt along said path are diverted by said diverter from said belt beyond the other edge of said path, mounting means for said diverter and providing support for said diverter when moving between said retracted position and said extended position with the movement being pivotal with respect to a vertical axis which is between said side edges of said belt and spaced from said one edge of said belt and remote from the downstream end of said diverter, wherein said axis is positioned transversely of said run of said belt with respect to the upstream end of said diverter, a pivot arm rigidly fixed to said diverter adjacent said upstream end, and which includes a vertical shaft extending upward from said pivot arm and providing mounting means therefor, a support arm for said shaft fixed to the other end

thereof and extending horizontally to said pivotal axis above said article-conveyor run and pivot means mounted at said pivot axis and providing pivotal support for said pivot arm.

4,298,118

STICK SEPARATING APPARATUS WITH IMPROVED RADIATION COUNTER

Edward D. Cottrell, Cattaraugus, N.Y., assignor to Champion International Corporation, Stamford, Conn.

Filed Dec. 10, 1979, Ser. No. 101,915

The portion of the term of this patent subsequent to Mar. 27, 1996, has been disclaimed.

Int. Cl.³ B65G *47/14*

U.S. Cl. 198—382 **1 Claim**

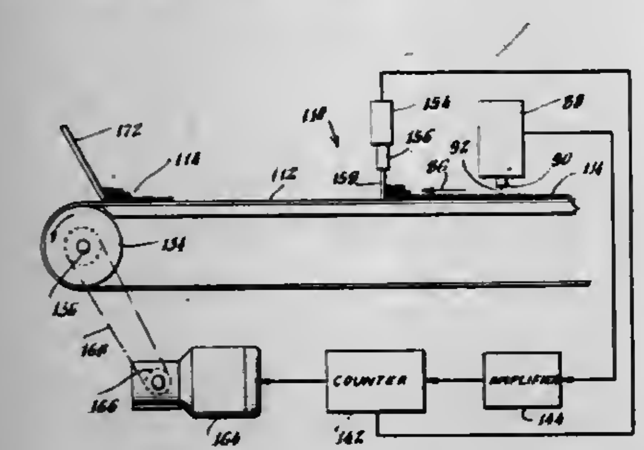

1. An apparatus for receiving a large number of randomly oriented elongated articles and for aligning and separating said articles into groups, each group containing a predetermined number of articles, said apparatus comprising:

(a) an aligning tray for receiving said randomly oriented articles on the upper surface thereof, said surface having means defining a plurality of parallel elongated channels, each of said channels being open at one end and closed at the other end, said tray including a first portion wherein said means defining said channels comprises a convoluted surface forming, in cross section, channels having generally rounded bottom surfaces and generally rounded walls between said channels, and a second portion wherein said means defining said channels defines a plurality of spaced-apart channels each having generally rounded bottom surfaces lower than said rounded bottom surfaces formed by said convoluted surface and a plurality of separators between said spaced apart channels, with the number of channels in said second portion being smaller than the number of channels in said first portion;

(b) means for supporting and repetitively reciprocating said tray in a direction having a component of movement in the longitudinal direction of said channels to cause said articles to enter said channels and move lengthwise toward and out of said open ends;

(c) a plurality of hopper means for receiving articles from said tray, each of said hopper means including an upwardly opening compartment having side walls and a bottom wall, one of said side walls having means defining an exit opening through which articles can pass in a direction perpendicular to their lengths; said hopper means further including a plurality of chutes, equal in number to the number of channels in said second portion of the tray, said chutes being mounted for vibratory movement with said compartments and extending downwardly between said open ends of said channels in said second portion of the tray and said compartments, with the number of said compartments also being equal to the number of channels in said second portion of the tray;

(d) means for supporting said hoppr means adjacent to and below said open ends independently of said tray to receive aligned articles emerging from said open ends, said means for supporting including

means for vertically vibrating said hopper means; (e) belt conveyor means movable below said hopper means to receive said articles and to convey said articles in their aligned side by side arrangment perpendicular to the direction of their lengths to said receiving location;

(f) counting means including light emitting diode sensing means adjacent said hopper means for counting a predetermined number of articles being fed to and disposed on said conveyor means, said sensing means including a source of optical energy adapted to be directed onto said articles carried on said conveyor means, said sensing means further including receiving means disposed adjacent said optical energy source and spaced above said conveyor means for detecting the amount of optical energy reflected by said articles, whereby said sensing means is operable to produce a counting signal each time one of said articles is counted thereby, said signal being generated as a function of reflected light only, such that said conveyor means may be continuous, said counting means further including a counter coupled with said sensing means for receiving and counting said counting signals; and

(g) means under control of said counting means for segregating said predetermined number of articles counted by said counting means from a like number counted thereafter.

4,298,119

MULTIPLE COMPARTMENT CONTAINERS

Michael L. Murray, 425 W. Swallow, Ft. Collins, Colo. 80526

Filed Jan. 11, 1980, Ser. No. 111,209

Int. Cl.³ B65D *79/00*

U.S. Cl. 206—219 **6 Claims**

1. A multiple-compartment container comprising:

an elongated sleeve of flexible, heat-sealable material;

means defining a first heat-sealing together completely of the walls of one end portion of said sleeve;

means defining a second heat-sealing together completely of the walls of the other end portion of said sleeve;

means defining a third sealing together of the walls of said sleeve at a location spaced between said end portions to define first and second hollow compartments respectively on each side of said third sealing, said third sealing being effected by twisting of said sleeve about its longitudinal axis;

and means defining a fourth sealing together of the walls of said sleeve at a location spaced between said third sealing and one of said end portions to define a third hollow compartment disposed between said first and second compartments, said fourth sealing being effected by twisting of said sleeve about its longitudinal axis;

said third and fourth twisted sealings include a continuous circumferential heat seal readily separated upon a pulling apart of said end portions;

said twistings of said third and fourth sealings are in opposite directions so that the pulling apart of said end portions results in simultaneous untwisting of said third and fourth sealings thereby opening into the original elongated sleeve.

4,298,120

CHIP-LIKE ELECTRONIC COMPONENT SERIES AND METHOD FOR SUPPLYING CHIP-LIKE ELECTRONIC COMPONENTS

Fumihiko Kaneko; Koichi Nitta, and Kouichi Saito, all of Takefu, Japan, assignors to Murata Manufacturing Co., Ltd., Japan

Filed Nov. 29, 1979, Ser. No. 98,325

Claims priority, application Japan, Dec. 26, 1978, 53-163580; Dec. 26, 1978, 53-163581; Dec. 26, 1978, 53-163582; Jan. 9, 1979, 54-2471; Jan. 18, 1979, 54-5100

Int. Cl.³ B65D *73/02, 75/22, 85/30*

U.S. Cl. 206—329 **26 Claims**

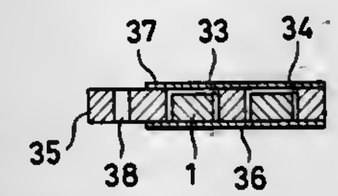

1. A chip-like electronic component series, comprising;

a flexible tape extending in a longitudinal direction and having a plurality of cavities formed therein and distributed along said tape in said longitudinal direction;

a plurality of chip-like electronic components received in respective ones of said cavities; and

cover means for covering said cavities to retain said components therein;

each of said cavities having a quadrilateral first open end;

each of said components having first and second opposite ends and having first and second electrodes formed thereon, respectively, and having a cross section smaller than said first open end of each said cavity, and the shape of each said component cooperating with that of its respective said cavity to cause said component to be received in its respective said cavity with a predetermined orientation, and to prevent said component from rotating therein; and

said cover means being adhered to said tape and having a tensile strength that is greater than the adhesion between said cover means and said tape.

4,298,121

CONNECTED TEMPORARY FASTENING NAILS FOR USE IN THE ADHESIVE INSTALLATION OF ORNAMENTAL PLYWOOD

Kunimasa Oide, Kawanishi, and Hideo Ishii, Okayama, both of Japan, assignors to Daichiku Company, Limited, Hyogo, Japan

Filed Aug. 8, 1980, Ser. No. 176,531

Int. Cl.³ B65D *83/02, 85/24, 85/62;* **F16B** *13/06*

U.S. Cl. 206—347 **9 Claims**

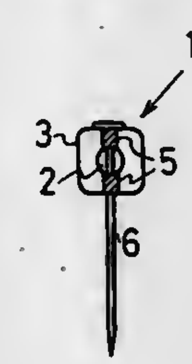

1. Connected temporary fastening nails comprising:

an elongate continuous elastic member of substantially square cross-section and having a hollow space formed longitudinally therein;

a plurality of pairs of opposing cuts formed in opposing sides of said elastic member forming connecting parts transverse of said elastic member, said plurality of pairs of opposing cuts being provided at a predetermined spacing; and

a plurality of small diameter nails provided through said elastic member at a predetermined interval along the length of said elastic member and parallel to said connecting parts, one each of said nails being provided between two adjacent connecting parts.

4,298,122

METHOD AND APPARATUS FOR APPLYING WARP THREADS TO HAND LOOMS

Christer Ekelund, Bjorkelycka, S-510 10 Horred, Sweden

Filed Jul. 19, 1979, Ser. No. 58,930

Claims priority, application Fed. Rep. of Germany, Jul. 25, 1978, 7822192[U]

Int. Cl.³ B65D *85/66*

U.S. Cl. 206—389 **6 Claims**

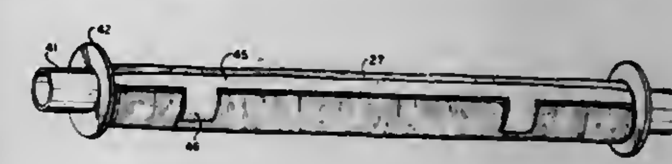

1. A package of warp threads for installation on a hand loom having heddles and a warp beam comprising a series of warp threads, a support consisting of a disposable cylinder, an anchor strip extending along the length of said support for releasably anchoring said warp threads to the support in a given sequence corresponding to the sequence of the threads in said hand loom, with the inner ends of the warp threads all projecting beyond the anchor strip to provide free ends to be drawn through the heddles, the warp threads all being wound circumferentially of said support to protect said free ends and to provide a given length of warp threads thereon, disc-like flanges spaced inwardly from the ends of said support for guiding and limiting the warp threads adjacent thereto, the ends of the support beyond said flanges forming hand holds for handling the package without damage to the threads during installation, an adhesive transfer tape secured to the outer ends of the warp threads to maintain said threads in said desired sequence for attachment to the warp beam, said tape extending longitudinally of the support and holding the warp threads on the support, said transfer tape being releasably anchored to the underlying warp threads to provide a package capable of being handled without disruption of the warp threads therein, said tape being displaceable with the outer ends of the warp threads secured thereto from said underlying warp threads onto the warp beam of the hand loom, and operable to be secured to said beam to anchor all of said warp threads thereon.

4,298,123

CARTON CORE RETAINERS

Harry L Roccaforte, Western Springs, Ill., and Jimmy J. Hanko, Racine, Wis., assignors to Champion International Corporation, Stamford, Conn.

Filed Jan. 30, 1980, Ser. No. 116,857

Int. Cl.³ B65D *85/67, 85/671, 5/50*

U.S. Cl. 206—396 **15 Claims**

1. In a carton having at least three sides and end walls for containing a product on a hollow core, at least one carton end wall forming a core retainer comprising:

a. an inner wall coupled to a first side of said carton and having an orifice therein, said inner wall including means adjacent said orifice defining a slotted detent,

b. an overlapping wall coupled to a second side of said carton and having a projection thereon extending through said orifice into said hollow core whereby said core is held in said carton, said overlapping wall including a panel having one side coupled to said second side of said carton, a projection hingedly coupled to the other side of said

panel, a fold line in said projection allowing said projection to bend about said fold line and form a V-shaped insert pointedly extending into said hollow core, and locking means including a locking tab hingedly connected to the outer end of said projection for engaging said slotted detent means in said inner wall thereby locking said V-shaped insert within said hollow core, and

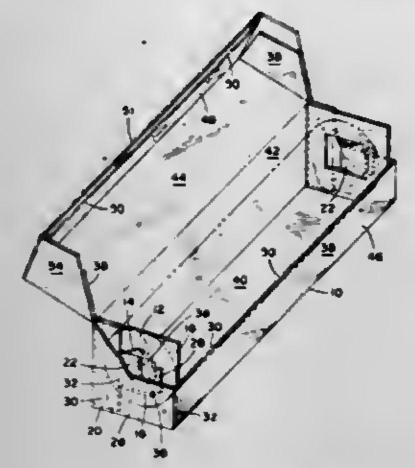

c. an outer wall coupled to a third side of said carton for closing the end of said carton, said outer wall overlying a portion of said projection and said locking tab.

4,298,124
SLIDE PROGRAMMING DEVICE
Frederic McCurdy, Newburgh, N.Y., assignor to Graphic Technology, Inc., Newburgh, N.Y.
Filed Jan. 7, 1980, Ser. No. 110,036
Int. Cl.³ B65D *85/30*
U.S. Cl. 206—455 **8 Claims**

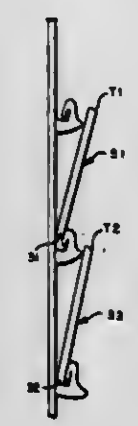

1. A holding device for the sorting or editing of slides and the like comprising:
a transparent rigid planar backing member; and
means mounted on one face of the planar backing member for holding slides on the backing member in at least one row comprising at least two slide holding strips spaced apart by a distance not greater than the length of the slides to be held and each strip comprising resilient flexible material having a first portion coactive with the one face of the backing member to form an expandable slot receptive of the bottom edge of a slide therebetween in a partially inserted position in response to a first substantially downward force to retain the slide for easy removal and in a fully inserted position in resonse to a second substantially downward force greater than the first force to retain the slide to prevent lateral movement and inadvertent removal thereof and a second portion for engaging the top portion of the slide when the slide is in the partially or fully inserted position to maintain the top edge in a spaced apart relationship with respect to the one surface of the backing member.

4,298,125
DIAL TYPE CHILD RESISTANT DISPENSER
Walter G. Berghahn, Scotch Plains, and Jack Weinstein, Old Bridge, both of N.J., assignors to Bristol-Myers Company, New York, N.Y.
Filed May 19, 1980, Ser. No. 151,062
Int. Cl.³ B65D *83/04;* **G09F** *9/40*
U.S. Cl. 206—531 **6 Claims**

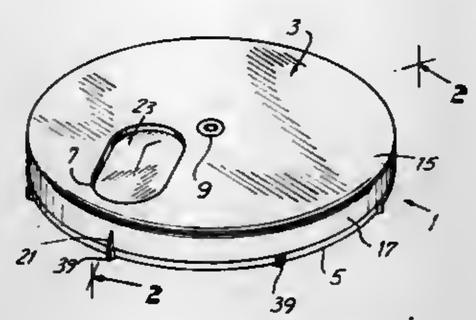

1. An opaque child resistant dispensing package for tablets and the like comprising:
(a) first and second sections, said sections being adapted to be rotated with respect to each other about a common axis;
(b) a first end wall in said first section, a dispensing opening cut through said first end wall and first position indicator means associated with said dispensing opening to assist in positioning said opening for dispensing said tablets;
(c) a second end wall in said second section, a plurality of flexible open-ended pockets adapted to hold tablets and the like depending from said second end wall; each of said flexible pockets having associated therewith a second position indicating means; and
(d) rupturable opaque sheet material secured to said second end wall and spanning the open ends of said pockets;
said dispensing package being adapted to rotate said sections to bring said first and second position indicator means into registration with each other whereby pressure may be applied to said pocket to push said tablets through said opaque sheet material.

4,298,126
ADJUSTABLE HOLDER
Edwin A. Filipowicz, Greenfield, Wis., assignor to Griffith-Hope Company, Milwaukee, Wis.
Filed Aug. 27, 1979, Ser. No. 69,785
Int. Cl.³ A47F *7/00*
U.S. Cl. 211—50 **9 Claims**

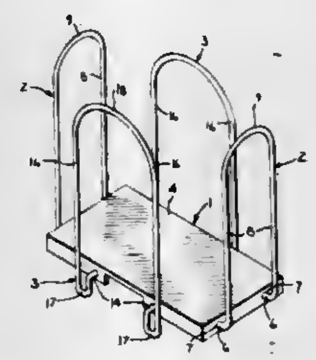

1. An adjustable holder for holding articles, comprising a base having an upper surface to support a stack of articles, a plurality of retaining members connected to the sides of the base and extending upwardly from the base, each retaining member including a first section disposed beneath the base and a second section connected to the first section and extending upwardly beyond the base, oppositely disposed retaining members include connecting sections connecting the respective first section and the second section, said connecting sections extending downwardly from the first sections to a level below the base to provide a support for the holder, a locking member connected to the base and engaged with the first section of each retaining member to lock the first section against movement with respect to the base, each locking member including a pair of spaced arms disposed in a non-parallel condition and having aligned openings to receive the respective first section, flexing of said arms toward a parallel condition enabling the respective first section to be freely moved within the aligned openings to extend and retract the retaining member relative to the base, release of the arms causing the arms to return to said non-parallel condition to firmly grip the respective first section and lock the first section against movement relative to the base.

4,298,127
STACKING BASKET ASSEMBLY
Clarence W. Upshaw, Tuttle, and Richard A. Goodwin, Moore, both of Okla., assignors to Unarco Industries, Inc., Chicago, Ill.
Filed Aug. 3, 1979, Ser. No. 63,199
Int. Cl.³ A47F *5/01*
U.S. Cl. 211—126 **18 Claims**

1. A basket assembly which comprises a plurality of wire baskets, each of said baskets having a plurality of wire walls defining a lading-carrying space, said walls including a bottom wall and removable end walls, each of said walls having an array of interconnected wires including a plurality of wire elements and a peripheral wire connected to and bounding said wire elements, and each of said walls defining a foraminous barrier for substantially preventing access therethrough into the lading-carrying space of said basket and confining goods carried in said basket, said barrier substantially preventing said goods from passing through the area bounded by said peripheral wire, each of said baskets having connecting means comprising a pair of laterally opposed camming ears extending outwardly of each of said end walls for detachably connecting said removable end walls to said basket in an erect position, said end walls of each basket being removable for permitting the bottom walls of said wire baskets to be nested within each other with said removed walls lying upon the bottom wall of the uppermost nested basket during storage, and each of said wire baskets including stacking means for stacking the wire baskets upon each other in a substantially vertical tier when the end walls are connected to the baskets in the erect position.

4,298,128
MOVABLE SUPPORT FOR ROTATABLE EXTEND/RETRACT SCREW IN TELESCOPIC CRANE BOOM
Narahari Gattu, Cedar Rapids, Iowa, assignor to Harnischfeger Corporation, W. Milwaukee, Wis.
Filed Feb. 19, 1980, Ser. No. 122,488
Int. Cl.³ B66C *23/06*
U.S. Cl. 212—267 **8 Claims**

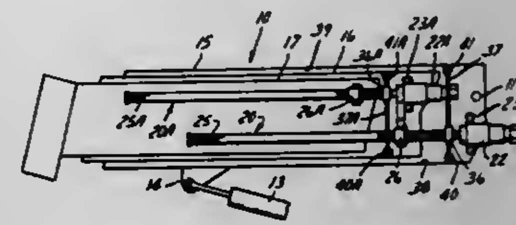

1. In a telescopic boom:
a pair of relatively movable boom sections;
an elongated rotatable screw rotatably mounted on one boom section;
a primary thread on said screw engaged with a primary nut on the other boom section whereby screw rotation effects relative telescopic movement of said boom sections;
a secondary thread on said screw of different lead than said first thread and engaged with a secondary nut;
and a support connected to and movable with said secondary nut, said support being movably mounted on one of said boom sections whereby said screw rotation also effects axial movement of said support at a different rate than said telescopic movement of the boom sections to a supporting position wherein it supports said screw intermediately thereof.

4,298,129
CHILDPROOF, SNAP-ON, TWIST-OFF SAFETY CAP AND CONTAINER
Morton Stull, Split Rock Rd., Boonton Township, Morris County, N.J. 07005
Filed May 2, 1980, Ser. No. 146,033
Int. Cl.³ B65D *55/02*
U.S. Cl. 215—224 **12 Claims**

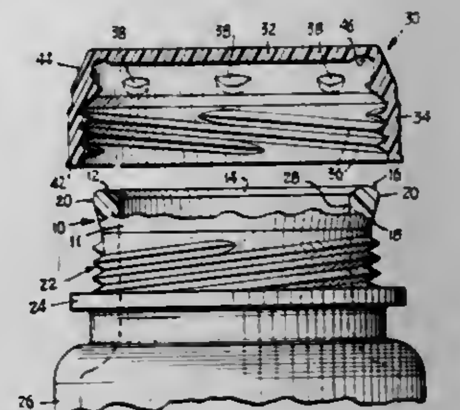

1. A childproof, push-on, quarter-turn, twist-off cap construction in a dispensing container, comprising in combination:
(a) a container neck having exterior screw thread means and having a conical camming surface,
(b) a resilient screw cap having internal screw threads means cooperable with the screw thread means of the container neck, all of said screw thread means being adapted to enable the cap to be forced onto the neck under straight axial pressure which forces the screw thread means to bypass each other,
(c) yieldable detent means on the screw cap, engageable and cooperable with the camming surface of the container neck, said detent means normally tending to either com-

plete the applying movement of the screw cap or else the removing movement of the same, and

(d) cooperable sealing surfaces on said container neck and screw cap,

(e) the number and pitch of said screw thread means enabling them, from any given rotative position of the screw cap with respect to the container neck, to shift said screw cap off of said neck in response to substantially a quarter turn in the unscrewing direction while the cap is being deformed by opposing, radially-inward pressures thereon which are sufficient to maintain its screw thread means in a deep driving position with respect to the screw thread means of the container neck, said cap normally maintaining its screw thread means out of said deep driving position.

4,298,130
ANTI-THEFT MOTOR FUEL TANK
Abraham Ifrach, 3220 Dalemead St., Torrance, Calif. 90505
Filed Aug. 18, 1980, Ser. No. 179,058
Int. Cl.³ B65D *25/02, 25/20*
U.S. Cl. 220—20 **9 Claims**

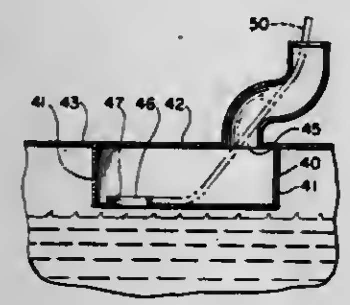

1. An anti-theft motor fuel tank system comprising a main fuel tank having an inlet opening in its upper portion, a vestibular tank having an inlet opening in its upper portion and an outlet opening in its lower portion laterally offset from the inlet opening of said vestibular tank; said vestibular tank being secured to said main tank with its outlet opening in communication with the interior of said main tank, and a rim extending around the outlet opening of said vestibular tank and upwardly interiorly thereof whereby a predetermined amount of fuel may be retained in said vestibular tank and passage of a siphon tube from the inlet opening through the outlet opening of said vestibular tank is prevented while permitting siphoning thereby of such retained fuel.

4,298,131
POT LID
Shoji Saito, 2-227 Kofudai, Ichihara, and Mitsuo Nagashima, 4-53-14 Maruyama Funabashi, both of Japan
Filed Sep. 22, 1980, Ser. No. 189,140
Claims priority, application Japan, Apr. 2, 1980, 55-44354
Int. Cl.³ B65D *51/16*
U.S. Cl. 220—231 **4 Claims**

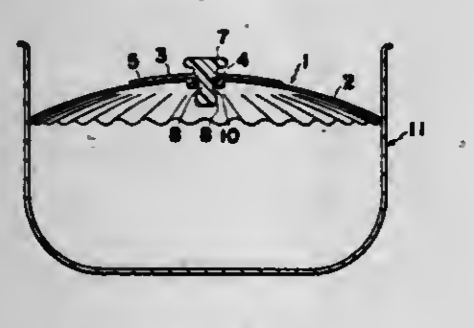

1. A pot lid for use with a vessel comprising:

a plate having a central portion and an outer circumferential portion surrounding the central portion, the central portion having a threaded opening in the center thereof and a plurality of openings surrounding the threaded opening, the outer circumferential portion having a plurality of grooves formed therein extending to the outer side edges of the plate; and

a cover member having a cover portion with a size sufficiently large to cover said plurality of openings, a grip protruding upwardly from a central region of the cover portion, and a rod projecting downwardly from said grip through an opening formed in the cover portion, said rod having a threaded end portion engageable with the threaded opening of said plate to thereby interconnect said plate and cover member, said rod further having an unthreaded portion positioned between said end portion and said grip so that said cover portion is guided by said unthreaded portion for movement between a first position covering said plurality of openings and a second position vertically spaced above said openings, said cover portion in said first position blocking fluid flow through said openings and being moved from said first position towards said second position by pressure increase within the vessel during heating thereof and being moved from said second position towards said first position by gravity.

4,298,132
CHILD-PROOF LID AND PAIL ARRANGEMENT
Herbert W. Galer, Newnan, Ga., assignor to United States Steel Corporation, Pittsburgh, Pa.
Filed Mar. 24, 1980, Ser. No. 132,738
Int. Cl.³ B65D *41/04*
U.S. Cl. 220—288 **4 Claims**

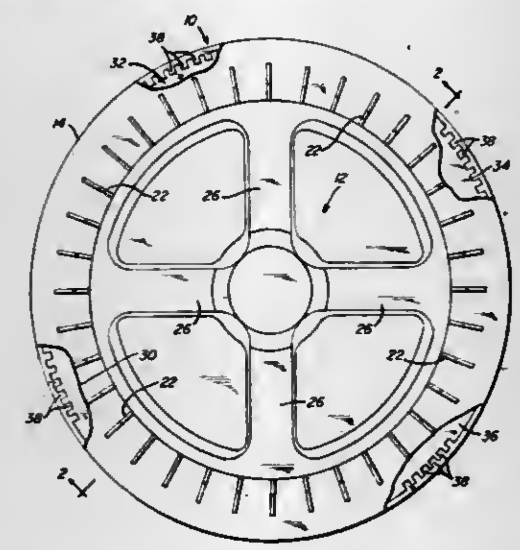

1. In a stiff molded plastic pail and lid therefor, said lid having an inverted U-shaped rim containing threaded portions and configured to fit over and receive the upper periphery of said pail, said pail having threaded portions about its outer upper periphery for mating with said threaded portions of said lid, the improvement comprising:

first engagement means comprising a first plurality of toothed areas located on the inner wall of said lid rim, said toothed areas extending radially inwardly from said inner wall toward the center of said lid; and

second engagement means comprising a second plurality of toothed areas, configured to releasably mate with at least a portion of said first plurality of toothed areas, said second toothed areas being located along the upper outer periphery of said pail, but out of phase with respect to said first plurality of toothed areas extending radially outwardly and at least a portion thereof being matable with said first engagement means when said lid is threaded down upon said pail for preventing rotation of said lid with respect to said pail by a child, the threaded engagement between said pail and said lid preventing prying off of the latter by a child, whereby the pail and lid are childproof when closed.

4,298,133
INTEGRAL TRAY AND COVER WITH SNAP LOCK
Paul Davis, Swampscott, Mass., assignor to Sweetheart Plastics, Inc., Wilmington, Mass.
Filed Aug. 20, 1979, Ser. No. 67,935
Int. Cl.³ B65D *6/34, 43/10, 43/14*
U.S. Cl. 220—306 **5 Claims**

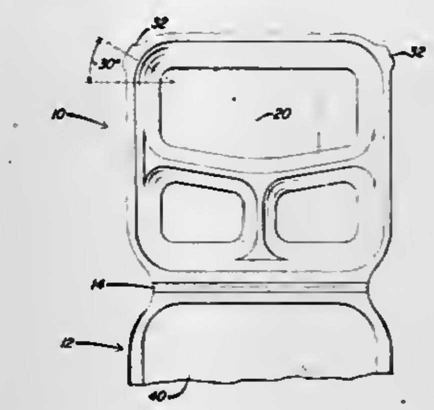

1. A foam plastic disposable food container comprising:

a generally rectangular bottom tray and cover integrally formed with one another of foam plastic and joined together along a common side edge that defines a hinge on one side of the tray and cover allowing the cover to pivot on the tray from a closed position wherein the cover lies on top of the tray to an open position wherein the cover is substantially coplanar with and disposed beside the tray,

said tray having a bottom wall and an upstanding, outwardly flared peripheral side wall about the four sides of the bottom wall,

said cover having a top wall and a depending downwardly flared peripheral side wall about the four sides of the top wall,

an outwardly extending flange about the upper edge of the side wall of the tray on each of the other three sides of the bottom wall to which the cover is not hinged, and an outwardly extending flange about the lower edge of the side wall of the cover and overlying the flange on the tray when the cover is closed,

a skirt extending downwardly from the outer edge of the flange on the cover and covering the outer edge of the flange on the tray,

tabs formed at two adjacent corners of the tray remote from the hinge and lying in the plane of and forming extensions of the flange on the tray,

said tabs extending away from each other at the same angle with respect to an imaginary line parallel to the hinge,

and undercut tab seats formed on the corners of the cover corresponding to the corners carrying the tabs on the tray, said seats receiving the tabs at the corners to releasably lock the cover closed.

5. A foam plastic disposable food container comprising:

a bottom tray and cover integrally formed with one another and joined together along a common side edge that defines a hinge on one side of the tray and cover allowing the cover to pivot on the tray from a closed position wherein the cover lies on top of the tray to an open position wherein the cover is substantially coplanar with and disposed beside the tray,

said tray having a bottom wall and an upstanding peripheral side wall about the sides of the bottom wall,

said cover having a top wall and a depending peripheral side wall about the sides of the top wall,

an outwardly extending flange about the upper edge of the side wall of the tray and an outwardly extending flange about the lower edge of the side wall of the cover and overlying the flange on the tray when the cover is closed,

a skirt extending downwardly from the outer edge of the flange on the cover and covering the outer edge of the flange on the tray,

at least one tab formed on the tray remote from the hinge and forming an extension of the flange on the tray in the same plane as said flange,

said tab being thinner and more dense than the side wall of the tray for greater strength and stiffness,

and an undercut tab seat formed on the cover and aligned with the tab on the tray when the cover is closed, the top of said seat defined by the outwardly extending flange of the cover, said seat receiving the tab to releasably lock the cover closed, said skirt being thinner and more dense at the region of the undercut tab seat than in other regions to provide greater strength and stiffness at the seat,

said tab and seat being at an acute angle with respect to the hinge.

4,298,134
SYSTEM FOR REUSING PAINT CANS
Herman L. Lewis, Jr., 22 Marsh Creek Rd., Amelia Island, Fla. 32034
Filed Jul. 10, 1980, Ser. No. 168,205
Int. Cl.³ B65D *41/18, 25/16*
U.S. Cl. 220—307 **9 Claims**

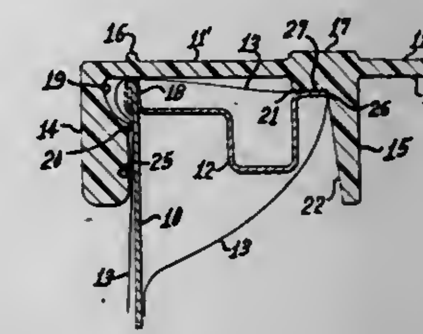

1. A system for reusing paint cans comprising a paint can with a circular groove lip seal adapted to receive a metallic lid with a circular tongue complementary to said groove; a flexible plastic film bag liner disposed within and covering the inside surfaces of said paint can and with the open end of said bag turned back over said lip seal and draped downwardly over the upper outside portion of said can; and a circular semi-flexible plastic lid for said can having a continuous outer shoulder depending from the lower surface of said cover adjacent its outer edge to fit snugly over the bead joining the side wall of said can with said circular groove lip seal portion, and having a continuous circular inner shoulder depending from said lower surface of said cover and spaced inwardly from and parallel to said outer shoulder and fitting snugly over the inner edge of said circular groove lip seal portion, said cover having projecting upwardly from the planar upper surface thereof an outer and an inner continuous and concentric ring, said outer ring being aligned immediately above said bead and being substantially as wide laterally as the lateral thickness of said bead and said inner ring being located immediately above said inner edge and laterally spanning outwardly and inwardly from said inner edge.

4,298,135
COVER FOR FRYING PANS OR SIMILAR VESSELS
Franz Vossen, Stockach, Fed. Rep. of Germany, assignor to Huggles & Meurer, Libellenweg, Fed. Rep. of Germany
Filed Jun. 18, 1979, Ser. No. 49,344
Claims priority, application Fed. Rep. of Germany, Apr. 12, 1979, 2915274
Int. Cl.³ B65D *51/16*
U.S. Cl. 220—371 **5 Claims**

1. A throw away cover for a frying pan comprising a planar disk of cardboard material mountable on a frying pan to cover the same, said disk having stamped-out sector-shaped windows defining a circumferential ring, a plurality of spoke arms extending radially from said ring and a region in which said spoke arms merge, and a filter paper adhesively secured on the

underside of said disk and covering said sector-shaped windows, said filter paper being liquid-absorptive and at least partially air pervious, said sector-shaped windows being arranged in diametrically opposed pairs, said disk including two solid tongue-shaped tabs remaining after the sector-shaped windows are stamped-out, said tabs extending in the plane of said disk from said central region radially outwards in diamet-

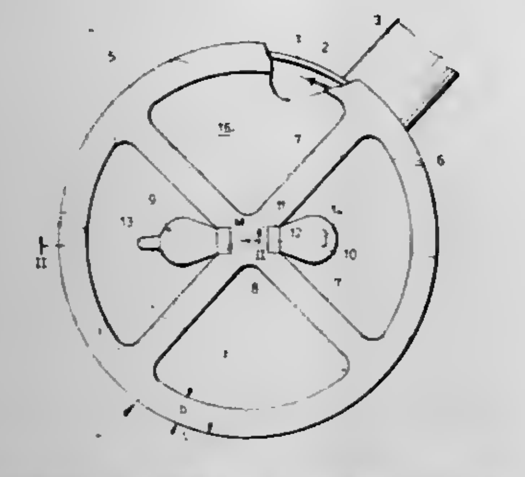

ric opposition into two diametrically opposed windows, said tabs being foldably attached to said central region so that when upfolded from the plane of the disk the tabs are substantially perpendicular to the plane of the disk in opposed horizontally spaced relation, said tabs including interengageable members to secure the tabs together in the upfolded horizontally spaced position to form a lift ring for the cover in said central region.

4,298,136

METHOD AND APPARATUS FOR SUPPLYING FILAMENT COILS TO A MOUNT MACHINE

Arthur Hollenbeck, West Caldwell, and James Petro, Little Falls, both of N.J., assignors to Westinghouse Electric Corp., Pittsburgh, Pa.

Filed Dec. 31, 1979, Ser. No. 109,009

Int. Cl.³ B65H *51/16*

U.S. Cl. 221—1 **7 Claims**

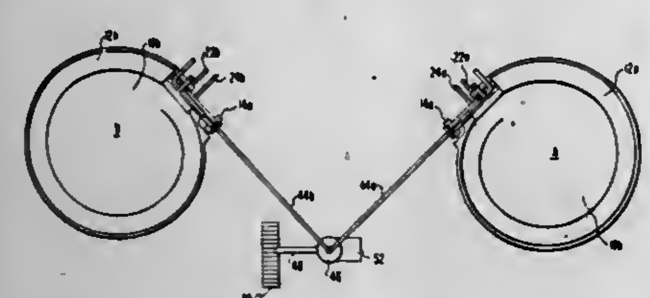

1. A method of delivering filament coils to a mount machine comprising the steps of:
providing at least two separate storage containers for a plurality of filament coils with each of said at least two separate storage containers having a filament coil discharge location;
sensing the need for a coil on said mount machine;
sensing the presence or absence of a filament coil at a first of said filament coil discharge locations;
sensing the presence or absence of a filament coil at a second of said filament coil discharge locations;
preselecting alternately one of said filament coil discharge locations and directing a short burst of air at said preselected filament coil discharge location when the presence of a filament coil is sensed at said preselected filament coil discharge location and the need for a coil is indicated by said mount machine to thereby deliver a filament coil to said mount machine.

4,298,137

AUTOMATIC CONTAINER FEED FOR CONTAINER HANDLING DEVICE

Derek V. Mancini, Markham, and William J. Wright, Orillia, both of Canada, assignors to Consumers Glass Company Limited, Etobicoke, Canada

Filed Jan. 28, 1980, Ser. No. 116,274

Int. Cl.³ B65G *59/06*

U.S. Cl. 221—11 **62 Claims**

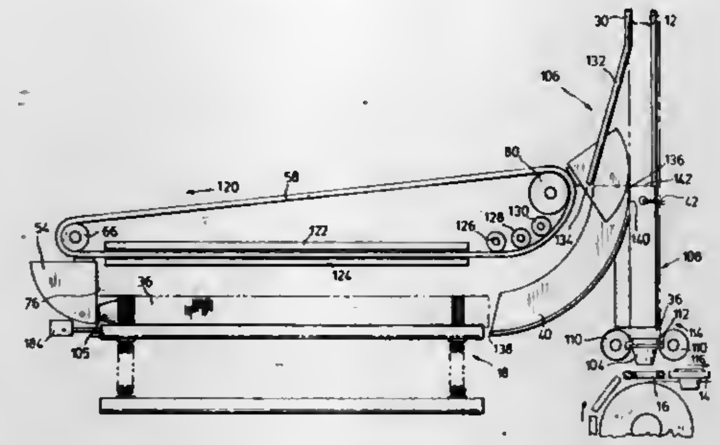

1. An apparatus for loading a stack of containers into a container chute comprising means for supporting a row of stacked containers on its side, said chute having a container side entrance spaced above the bottom of and below the top of said chute to define upper and lower chute portions, said upper chute portion being of a height to receive a row of stacked containers, means for guiding pushed movement of a stack of containers from said support means through said container side entrance, means for pushing a stack of containers along said support means and guide means upwardly into said chute upper portion and releasing contact with such stack located in said chute upper portion to permit such stack to drop past said entrance into said chute lower portion.

4,298,138

TANDEM COLUMN VENDER APPARATUS

Kenneth W. Oden, Charles Town, W. Va., assignor to Dixie-Narco, Inc., Ranson, W. Va.

Filed Feb. 29, 1980, Ser. No. 125,923

Int. Cl.³ B65G *59/00*

U.S. Cl. 221—115 **7 Claims**

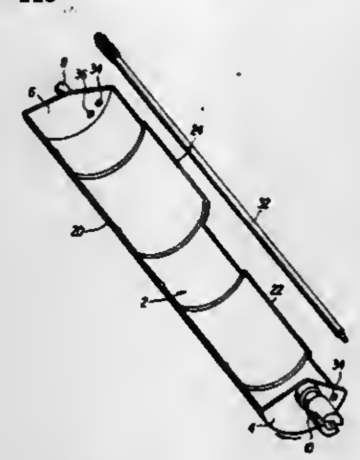

1. In a vending machine:
means defining a compartment adapted to hold front and rear columns of cylindrical articles of predetermined diameter;
a dispensing cradle in the lower end portion of said compartment and comprising a hollow, open-sided semicylindrical cradle extending from front to rear of said compartment and mounted for rotation about its axis, said axis extending from front to rear of said compartment;
said cradle having a straight axially extending leading edge and a stepped trailing edge for sequentially dispensing articles therein from between said stepped edge and a compartment wall, and sequentially from said front and rear columns upon rotation of said cradle about its axis;
the internal diameter of said cradle being substantially equal to the diameter of said cylindrical articles whereby rotation of said cradle with cylindrical articles therein and columns of said articles thereabove will cause said leading edge to move between the articles in said cradle and those thereabove, without substantially lifting said column, to support the latter while sequentially dispensing those in the cradle.

4,298,139

CUP DISPENSER

John R. Radek, Hinsdale, Ill., assignor to Ready Metal Manufacturing Company, Chicago, Ill.

Filed Jul. 30, 1979, Ser. No. 61,709

Int. Cl.³ B65H *1/02*

U.S. Cl. 221—198 **1 Claim**

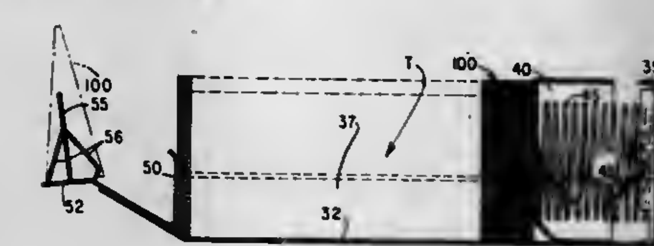

1. A dispenser for disposable cups in collapsed stacked condition, comprising
a. a sleevelike housing having side walls and an open front portion,
b. a relatively shallow tray member slidable through said front portion and having a bottom portion for supporting a stack of flattened disposable cups, side walls, and a front cup-retaining portion attached to and carried by the tray member and protruding beyond said open front portion in the retracted position of said tray member,
c. a follower for resiliently urging cups forwardly in the tray,
d. latching means on the outside of said housing and tray member for detachably securing the tray in the housing, and
e. means comprising an arcuate concave recess at the front of the upper wall of said housing, whereby a limited number of cups is exposed for digital extraction from the tray.

4,298,140

NEWSPAPER AND MAGAZINE VENDING MACHINE

Walter K. Owens, P.O. Box 1032, Crestview, Fla. 32536

Continuation-in-part of Ser. No. 14,920, Feb. 26, 1979, Pat. No. 4,239,127. This application Apr. 17, 1980, Ser. No. 140,986

Int. Cl.³ B65G *59/08*

U.S. Cl. 221—232 **12 Claims**

1. A vending machine for newspapers and the like comprising a cabinet including a coin mechanism having a normally locked control element which is released by insertion of proper coins in the coin mechanism, a newspaper carriage horizontal guideway in the cabinet, a newspaper carriage mounted for movement on the guideway including means biasing the carriage forwardly toward the front of the cabinet, a retainer plate at the front of the guideway lapping the lower folded edge portion of the leading newspaper held against the retainer plate by the carriage, a gravity delivery chute for newspapers depending from the forward end of the guideway and leading to a delivery opening in the front of the cabinet below the guideway, a leading newspaper clamping plate in the cabinet above the elevation of said retaining plate and overlapping the top edge portion of each leading newspaper advanced by the carriage and exerting holding pressure thereon, resilient means biasing said clamping plate rearwardly toward the front face of the leading newspaper, a newspaper lifting plate in the cabinet near the forward end of said carriage guideway and adapted cyclically to engage the bottom folded edge of each leading newspaper and lift such edge above the top of the retainer plate and then release it so that each leading newspaper may free-fall onto said delivery chute, a manual linkage in the cabinet operatively connected with said lifting plate including a hand lever arranged exteriorly of the cabinet and operated by customers,

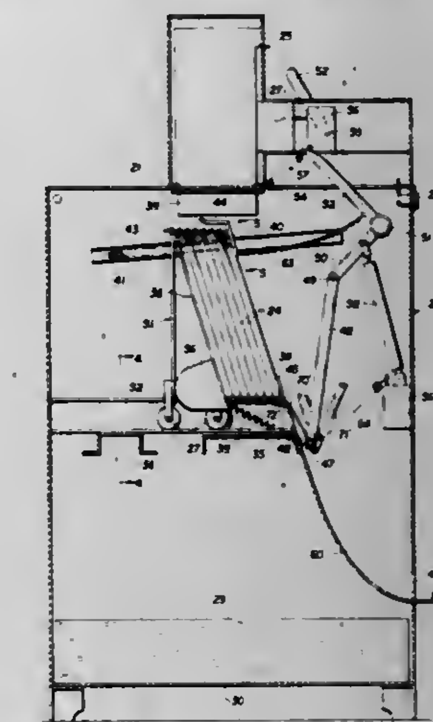

said linkage including an arm within the cabinet to engage and move the control element of the coin mechanism after release thereof, and said linkage further including a substantially unstretchable flexible element attached to said clamping plate and becoming taut to relieve the pressure of the clamping plate on each leading newspaper only after said lifting plate has lifted the lower folded edge of each newspaper above the top of said retainer plate.

4,298,141

OBJECT SEPARATOR

Valdas S. Ramunas, Euclid, Ohio, assignor to Acme-Cleveland Corporation, Highland Heights, Ohio

Filed May 3, 1979, Ser. No. 35,633

Int. Cl.³ B65G *59/00*

U.S. Cl. 221—251 **16 Claims**

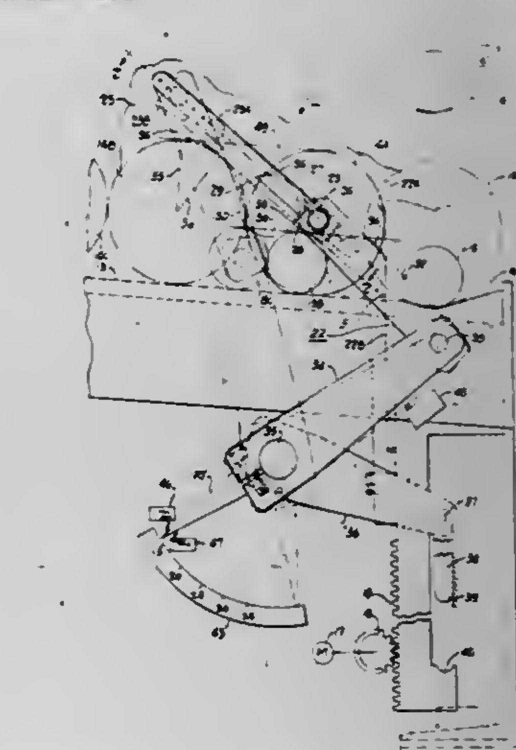

16. An escapement mechanism having a pallet insertable

along a first path into and removable from a second path of movement of serially disposed objects movable along a surface toward an exit end thereof,

characterized in that said mechanism is automatic size compensating by means mounting said pallet for movement toward the objects along the first path which intersects and crosses at an acute angle of less than 45° the second path of movement of the objects, said second path of movement of the object being parallel to the object supporting surface and of variable distance therefrom depending on the size of the objects,

and an abuttable surface on the upper part of said pallet adapted to abut and move upwardly and away from said exit end any said objects lying on serially disposed objects which lie on said surface.

4,298,142
ARTICLE HOLDER AND DISPENSER INCLUDING ADJUSTABLE DISPENSING MEANS AND ONE-WAY DISCHARGE OPENING
Lorne R. Stanley, Hillsborough, Calif., assignor to Safe-T Pacific Company, Redwood City, Calif.
Filed Sep. 28, 1979, Ser. No. 79,705
Int. Cl.³ A47F *1/08;* B65G *59/10*
U.S. Cl. 221—304 10 Claims

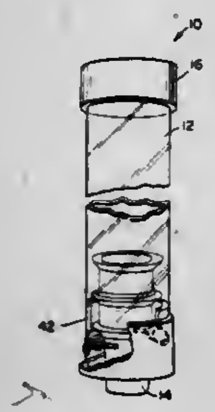

1. An article holder and dispenser for nested articles such as ice cream cones, cups and the like comprising an elongate hollow container means for storing the articles therein, said container means having an interior surface and defining a discharge opening at one end thereof for dispensing the articles therethrough, a plurality of circumferentially spaced article retaining means located within said container means adjacent its interior surface and the periphery of said discharge opening for establishing the effective size of said opening in order to releasably retain the articles to be dispensed, means supporting all of said retaining means for limited circumferential movement relative to one another adjacent the interior surface of said container means for varying the effective size of said discharge opening without distorting the shape of said container means, means for releasably maintaining said retaining means in adjustably fixed circumferential positions relative to one another whereby to fix the effective size of said opening and means cooperating with said retaining means for preventing the latter from allowing said articles, once dispensed, from being re-inserted back into said container means through said discharge opening, said preventing means being separate from said retaining means and being disposed in a fixed position adjacent said retaining means opposite said discharge opening.

4,298,143
TIME-CONTROLLED DEVICE FOR PREVENTING POURING OF STALE COFFEE FROM FLASKS
Charles J. Peterson, 214 W. Vine, Springfield, Ill. 62704
Filed Nov. 27, 1978, Ser. No. 959,930
Int. Cl.³ B67D *5/08;* G04C *23/38*
U.S. Cl. 222—70 6 Claims

1. A time-controlled device in combination with, and for preventing the pouring of stale coffee from a conventional coffee-maker flask, comprising: a generally cylindrical stopper for closing the throat of said flask and having a pouring passage therethrough, valve means movable between passage-closing and passage-opening positions, means for moving the valve means between the passage opening and the passage

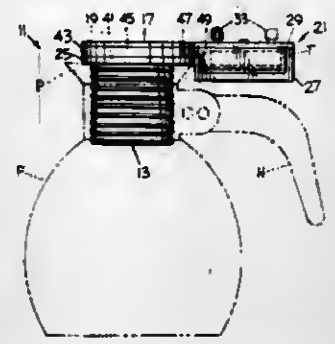

closing positions, and a seperate manually settable mechanical timer means cooperating with said means for moving for providing timer-delayed automatic movement of said valve means from its passage-opening position to its passage-closing position.

4,298,144
GREASE GUN
Klaus A. Pressl, Obermichelbach, Fed. Rep. of Germany, assignor to Jakob Pressl Sohne, Nuremberg, Fed. Rep. of Germany
Filed Apr. 11, 1979, Ser. No. 29,121
Claims priority, application Fed. Rep. of Germany, Apr. 12, 1978, 2815699
Int. Cl.³ F16N *3/12*
U.S. Cl. 222—256 7 Claims

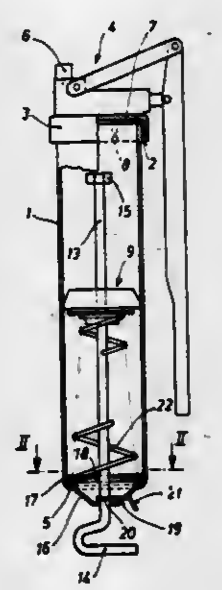

1. A grease gun comprising a tubular casing; a pump attachment for one end of the casing; a cover mounted internally at the other end of the casing, engaging a turned-in rim portion thereof, said cover having a section for projecting from said other end of the casing and being axially movable within the casing, said cover further being provided with an outer guide ring section fitting internally on said turned-in rim portion, the ratio of the outer diameter of said cover to the width of said outer guide ring section being about 6.5 to 8.5; a draw rod axially slidably disposed in said casing, said draw rod extending through said projecting part of said cover and terminating in a handle; a pressure collar encircling said draw rod within said casing; a disc within said outer guide ring section; a compression spring means within said casing operating between said collar and said disc; a selectively openable and closeable means for providing for escape of air from within said casing at said one end of said casing; and means for fixing the axial position of said draw rod relative to said cover comprising

clamping means for said draw rod internally of said cover and operating means for said clamping means externally of said cover, said operating means comprising a substantially radially extending operating member of smaller radial extent than the width of said casing.

4,298,145
ADAPTER FOR A CONTAINER
Motoyori Iida, 106, 4-chome, Kasugaoka, Itami-shi, Hyogo-ken, Japan
Filed Oct. 9, 1979, Ser. No. 82,588
Claims priority, application Japan, Mar. 9, 1979, 54-31436[U]
Int. Cl.³ B67D *3/00;* B65D *51/16*
U.S. Cl. 222—478 5 Claims

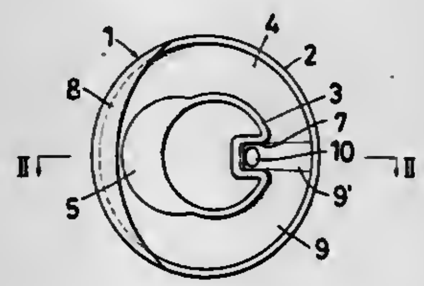

1. An adapter for a liquid container comprising:
an outer tube for mounting on a liquid container;
an inner tube having a pouring lip on its upper edge on one side thereof and a groove on the outer surface thereof which extends from the top end of said inner tube, at a position opposite to said pouring lip, to the bottom end thereof;
said inner tube including a wall which separates said groove from the interior space of said inner tube; and
a guide plate connecting said outer tube and inner tube together, said guide plate being inclined from under said pouring lip toward the lower end of said groove, said guide plate having a hole located at a position within said groove for venting air therethrough.

4,298,146
ONE-PIECE DISPENSING CLOSURE
Gary V. Montgomery, Evansville, Ind., assignor to Sunbeam Plastics Corporation, Evansville, Ind.
Filed Aug. 23, 1979, Ser. No. 69,116
Int. Cl.³ B65D *47/08*
U.S. Cl. 222—536 8 Claims

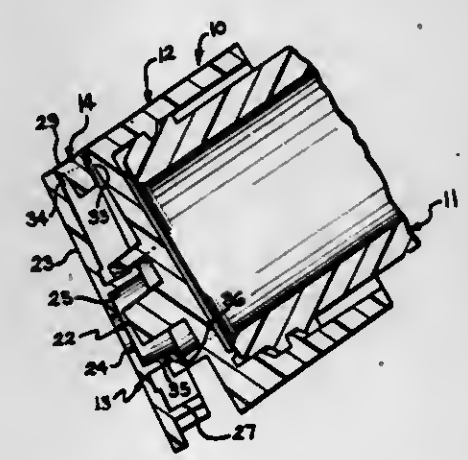

1. A dispensing closure for a liquid container comprising: a cap having means for retaining it on the neck of a container and a top with a dispensing opening therethrough, a lid having a dispensing opening therethrough, an integral hinge connecting said cap and said lid and constraining said lid for angular movement of said lid to and from a closed position when said lid is pressed down against the top of said cap, a plug on one of said cap and said lid of such size as to extend into and close the dispensing opening in the other of said cap and said lid when said lid is in the closed position, and cooperating means including portions on said cap and said lid engageable for normally limiting the relative angular movement of said lid and said cap about said hinge from the closed position to an open dispensing position in which said plug is withdrawn from the dispensing opening in the other of said cap and said lid and in which said lid overlies and engages with said cap to resist further relative opening movement.

4,298,147
DISCHARGING MECHANISM FOR MOLTEN METAL AND SLAG REMAINING IN TUNDISH FOR CONTINUOUS CASTING MACHINE
Akira Honda, Kamakura; Takanori Anzai, Yokohama; Minoru Kitamura, Fukuyama; Masaru Ishikawa, Fukuyama, and Seishi Mizuoka, Fukuyama, all of Japan, assignors to Nippon Kokan Kabushiki Kaisha, Tokyo, Japan
Filed Jul. 26, 1979, Ser. No. 60,882
Claims priority, application Japan, Aug. 24, 1978, 53/102330
Int. Cl.³ B22D *11/10*
U.S. Cl. 222—601 6 Claims

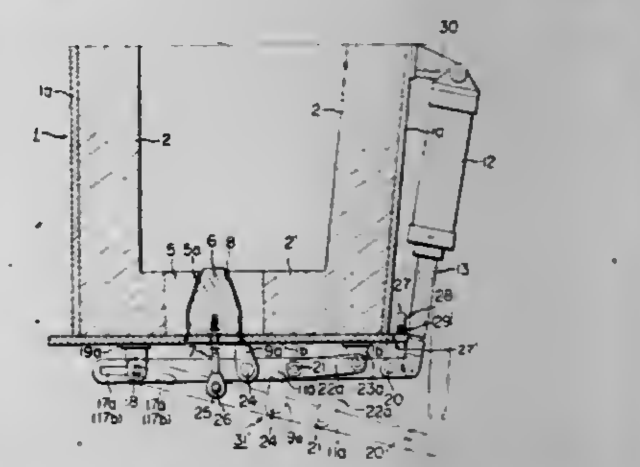

1. A discharging mechanism for molten metal and slag remaining in a tundish provided with at least one pouring nozzle for a continuous casting machine, comprising:
a discharging nozzle having a discharging bore outwardly flaring downwardly, for discharging molten metal and slag remaining in said tundish, said discharging nozzle being attached to the bottom wall of said tundish substantially at the center of said bottom wall, said discharging nozzle being separate and distinct from said pouring nozzle and being operable independently of said pouring nozzle;
a frustoconical plug mating with said discharging bore of said discharging nozzle, and being releasably inserted from outside said bottom wall of said tundish into said discharging bore;
a plug fitting fixed to the lower end of said plug; and
a plug engaging means connected to said plug fitting for selectively inserting said plug into said discharging bore of said discharging nozzle, holding said plug in said discharging bore of said discharging nozzle and withdrawing said plug from said discharging bore of said discharging nozzle, said plug engaging means including:
first and second pairs of supports fixed to the lower surface of the bottom wall of said tundish;
a pair of levers arranged in parallel with each other and substantially horizontally below said tundish at positions which said plug located therebetween, said pair of levers, at a first end portion thereof being respectively slidably connected via an axle to said first pair of supports, and, substantially at the center of said pair of levers, being connected via an axle and a pair of branch levers to said second pair of supports;
a plug stopper for inserting said plug into said discharging bore of said discharging nozzle and holding same therein so as not to allow it to drop out therefrom, said plug

stopper being fixed, at a position below said plug, to the center of a fixed axle extending across the space between said pair of levers;

a cylinder and a flexible rod, said cylinder being connected via an axle, substantially vertically to a further support fixed to the outer surface of the side wall of said tundish, and, the end portion of said flexible rod being connected via an axle to the other end portion of said pair of levers;

said plug fitting having a hole at an end portion thereof; and

a pin inserted into said hole in said plug fitting and projecting out from said pair of levers, said pin being inserted into said hole to be in contact with the lower surface of said pair of levers, thereby coupling said plug to said pair of levers;

whereby said plug is firmly inserted into said discharging bore of said discharging nozzle and held therein so as not to allow it to drop out therefrom by means of said plug stopper, by raising said pair of levers, with end portions thereof as the fulcrum, by causing said flexible rod to contract through the actuation of said cylinder; and on the other hand, said plug is withdrawn from said discharging bore of said discharging nozzle by means of said pin, by lowering said pair of levers, with end portions thereof as the fulcrum, by causing said flexible rod to expand through the actuation of said cylinder.

4,298,148
HAND DEVICE FOR MAKING A BIAS TAPE
Yoshiaki Gakiya, Habikino, Japan, assignor to Clover Mfg. Co., Ltd., Osaka, Japan
Filed Jan. 7, 1980, Ser. No. 110,213
Claims priority, application Japan, Mar. 16, 1979, 54-34622[U]
Int. Cl.³ A41H *33/00*
U.S. Cl. 223—37 5 Claims

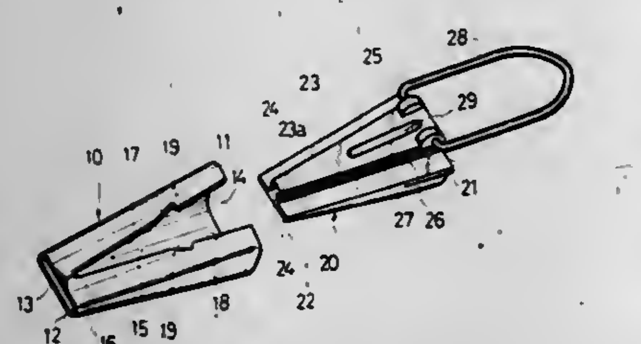

1. A hand device for making a bias tape comprising:

an outer tubular member made of metallic sheet material and having a substantially oval rear end opening and a slit-shaped front end opening;

said outer tubular member being gradually reduced or tapered from its rear end toward its front end;

said outer tubular member having a top opening of a substantially triangular shape defined by a vertex positioned near said front end and a pair of sides divergently extending from said vertex;

an internal solid member made of synthetic resin material and being gradually reduced or tapered from its rear end toward its front end at its top side so as to be exposed out of said top opening;

said platform having a pair of said walls engaged with said pair of sides, respectively;

said outer tubular member and said internal solid member being assembled together by inserting the latter into the former;

a tape-folding passage formed between an internal wall of said outer tubular member and an external wall of said internal solid member; and

said passage having a substantially U-shaped configuration in cross section at its rear end and being gradually changed in its configuration so as to provide a substantially flat annular configuration in cross section at its front end.

4,298,149
BODY HARNESS FOR CINEMATOGRAPHER
Robert E. Gottschalk, Los Angeles, and Felipe Navarro, Granada Hills, both of Calif., assignors to Panavision, Incorporated, Tarzana, Calif.
Continuation of Ser. No. 870,132, Jan. 17, 1978, abandoned. This application Dec. 13, 1979, Ser. No. 103,047
Int. Cl.³ G03B *17/00*
U.S. Cl. 224—201 7 Claims

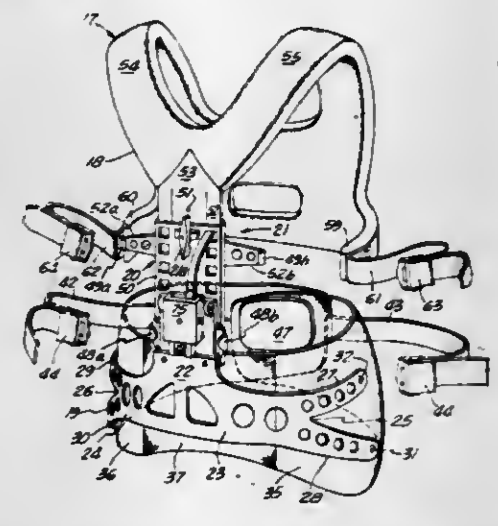

1. In a body harness for carrying a camera assembly, the combination of a shoulder member and a hip member, said shoulder member comprising a central plate having connected thereto a pair of support members, said support members having a configuration conforming to the shoulders of a camera operator, said support members being connected to a transverse member having a pair of straps attached thereto and fastenable to the central plate, said hip member comprising a rigid frame, extending from the front of the cameraman to approximate with his hips, said frame having connected thereto a resilient padding extending from one hip of the cameraman to the other across the front of the body, said resilient padding having a fastening means whereby said resilient padding may be firmly tightened about the hips of said cameraman.

4,298,150
PISTOL CHARGING HOLSTER
Richard Seldeen, 222 Ramona Pl., Camarillo, Calif. 93010
Filed Aug. 21, 1980, Ser. No. 180,041
Int. Cl.³ F41C *33/02*
U.S. Cl. 224—243 7 Claims

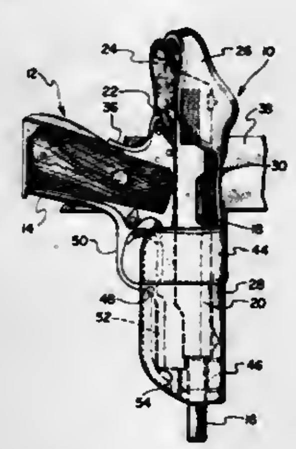

1. In combination with a pistol which has a barrel through which a round is to pass from the firing chamber, said pistol having a trigger assembly, said pistol having a slide located

about said barrel, said slide having an outermost end, said slide to be movable in respect to said barrel between a first position and a second position, with said slide in said first position the said barrel is confined within said slide, with said slide in said second position the said barrel is extended outwardly from said outermost end of said slide, movement of said slide from said first position to said second position causes charging of said pistol and upon return of said slide to said first position a round is to be located within said firing chamber, the improvement comprising a holster to facilitate charging of said pistol:

a holster housing having a fore end and an aft end, said fore end being formed into a sheath having a fixed sidewall forming an open ended encasing chamber, said encasing chamber having an inlet opening and an outlet opening, said outlet opening connecting with a recessed area open to the ambient, said firing chamber located within said recessed area, said slide to extend through said inlet opening and be located within said encasing chamber with said sheath located in a close fitting arrangement about said slide; and

means included within said encasing chamber, said means being attached to said sheath, said means to engage with said outermost end of said slide and fixedly position said slide in respect to said sheath during movement of said barrel to be outwardly extended in respect to said outermost end of said slide, said means comprising a protuberance protruding into said encasing chamber, said protuberance being located directly adjacent said outlet opening.

4,298,151
CARRIER RACK
Brian J. O'Connor, 1123 Marine Ave., Santa Monica, Calif. 90405
Continuation-in-part of Ser. No. 894,124, Apr. 6, 1978, which is a continuation-in-part of Ser. No. 774,522, Mar. 4, 1977. This application Apr. 2, 1980, Ser. No. 136,417
Int. Cl.³ B60R *9/10*
U.S. Cl. 224—329 20 Claims

1. Rack means for mounting at least one two-wheeled vehicle having a substantially triangular-shaped frame on an engine-powered vehicle comprising a frame, first support means slidably joined to and projecting from one side of said frame, second support means slidably joined to and projecting farther than said first support means from said one side of the frame, third support means joined to and projecting from said one side of the frame, said third support means including means for receiving and supporting the horizontal member of said substantially triangular-shaped frame of at least one two-wheeled vehicle, fourth support means joined to and projecting from said one side of the frame, said fourth support means including means for receiving and supporting the horizontal member of said substantially triangular-shaped frame of at least one two-wheeled vehicle, said receiving and supporting means lying at least partly along a common line, each of said third and fourth support means forming an angle with respect to said frame in the range of about 35° to about 85°, means joined to and projecting from the second side of said frame for being releasably secured between an opening in said engine-powered vehicle and closure means appended to said opening, and seating

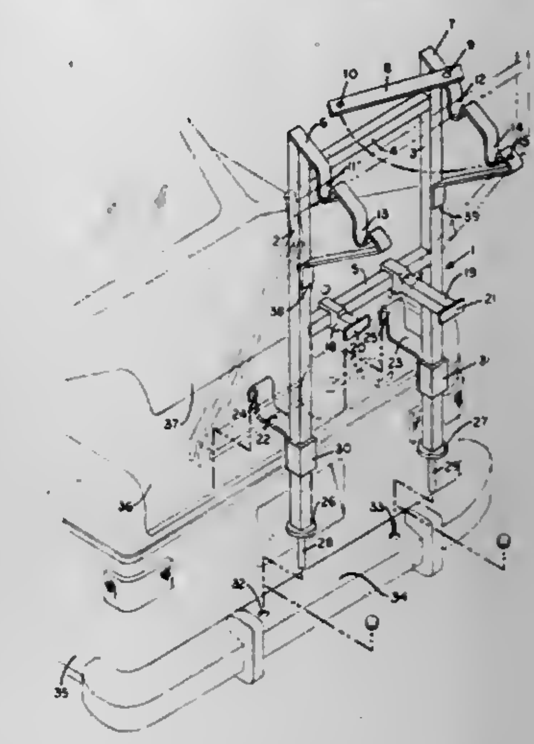

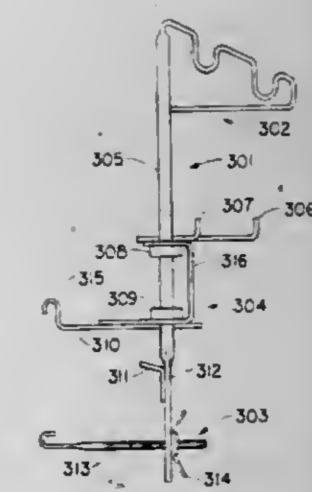

means joined to said frame and shaped to join said frame to said engine-powered vehicle.

4,298,152
ACCUMULATOR FOR TENUOUS MATERIAL
Robert C. Austin, Deerfield, Ohio, assignor to Weld-Loc Systems, Inc., Alliance, Ohio
Filed Aug. 4, 1980, Ser. No. 156,471
Int. Cl.³ B65H *17/28*
U.S. Cl. 226—95 11 Claims

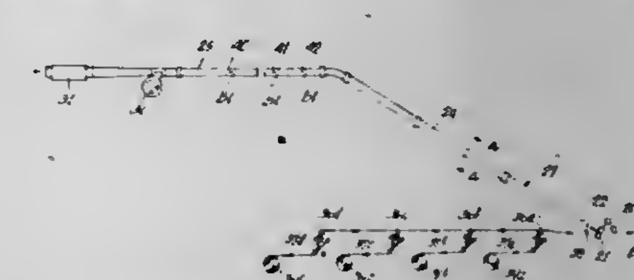

1. An accumulator for storing plastic strapping band and being adapted for use in conjunction with a line for processing plastic material into band form, said accumulator comprising,

an elongated tube having an inlet disposed adjacent to the exit end of said processing line at which end said band is in form for passage to a winding mechanism, and

means creating a rush of air into said inlet end, through said

tube and outwardly from an exit end thereof, the inrush of air sucking the band in loop form into said tube.

4,298,153

INTERFLOOR TUBE ASPIRATOR INLET MUFFLER

Wilbur L. Stables, Matoaca; David Pendlebury, Chester, both of Va., and William R. Weiss, Walnut Creek, Calif., assignors to Allied Corporation, New York, N.Y.

Filed May 7, 1980, Ser. No. 147,439

Int. Cl.³ B65H *17/32;* **D02G** *1/16*

U.S. Cl. 226—97 **4 Claims**

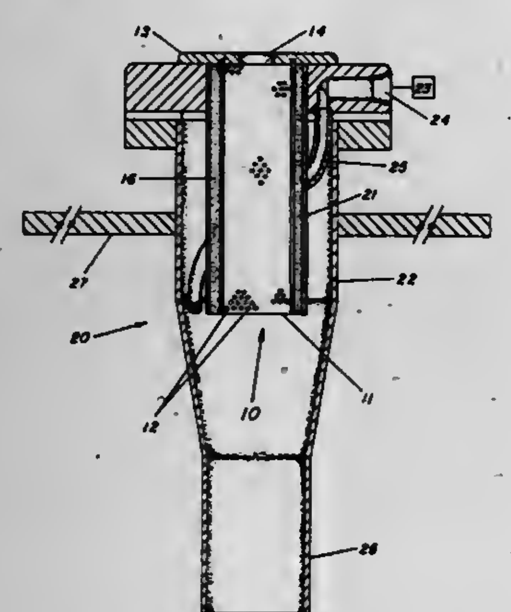

1. A muffler for use in conjunction with an interfloor tube and aspirator during the production of multifilament synthetic yarn wherein the interfloor tube comprises a tube and a yarn inlet passage which extends into the tube, the muffler comprising:

a. a perforated second tube having an outside diameter which is smaller than the inside diameter of the yarn inlet passage, the perforated second tube having a plurality of perforations which create an open area for the perforated second tube of from 35 to 95 percent, the length of the perforated second tube being essentially coextensive with the yarn inlet passage;

b. a restrictor plate, mounted so as to cover the entrance to the yarn inlet passage, the perforated second tube being mounted at one end to the restrictor plate so as to be within the yarn inlet passage and define an annular chamber therebetween, the restrictor plate having an opening communicating with the opening of the perforated second tube, the smallest dimension of the opening of the restrictor plate being at least about 0.1875 inch (0.4763 cm.) at yarn extrusion rates of up to 50 pounds per hour per position and at least about 0.5000 inch (1.27 cms.) at yarn extrusion rates of about 51 to 160 pounds per hour per position; and

c. sound absorbing material, disposed throughout the annular chamber; whereby the noise level at the inlet of the interfloor tube is reduced by up to 10ΔdB(A) by the muffler when the aspirator is operational.

4,298,154

AUTOMATIC SOLDERING MACHINE

Douglas F. DeFusco, Warwick, R.I., assignor to B. B. Greenberg Company, Providence, R.I.

Filed Jan. 14, 1980, Ser. No. 112,074

Int. Cl.³ B23K *37/04*

U.S. Cl. 228—49 R **8 Claims**

1. Automatic soldering apparatus for soldering components of an elongated jewelry article such as the adjacent ends of split jump rings utilized to connect chain to opposite sides of an ornament and to a spring ring wherein it is desirable to avoid adversely thermally contacting those portions of the jewelry article disposed adjacent the ends being soldered comprising, a frame including longitudinally directed laterally spaced guides, a heat resistant fixture disposed between said guides, said fixture adapted for longitudinal movement relative to said frame and having a generally planar upper face in which at least one laterally extending article-receiving groove is disposed for receipt of said jewelry article to a fixed position relative to said

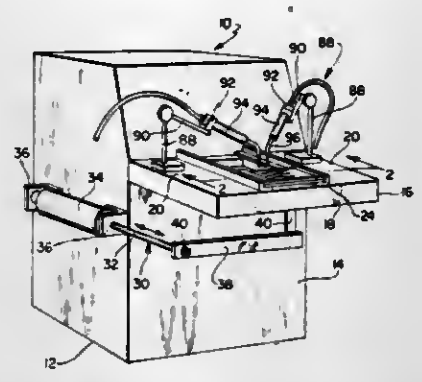

fixture, at least one longitudinally oriented groove intersecting said lateral groove, said groove intersection adapted to receive one of said split rings to be soldered, heating means mounted on said frame for directing a narrow, high temperature flame jet into said longitudinal groove and means for longitudinally moving said fixture relative to said frame, whereby said split ring is momentarily contacted by said flame jet during movement of said fixture relative to said jet.

4,298,155

METHOD FOR MAKING AN AXLE SPINDLE

John Palovcik, Kenton, Ohio, assignor to Rockwell International Corporation, Pittsburgh, Pa.

Continuation of Ser. No. 62,714, Aug. 1, 1979, abandoned. This application Nov. 3, 1980, Ser. No. 202,912

Int. Cl.³ B23K *31/02*

U.S. Cl. 228—114 **17 Claims**

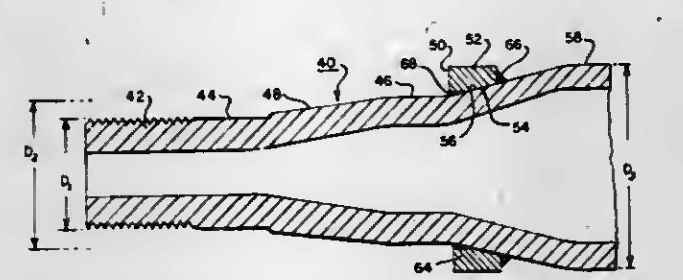

1. A method of forming a spindle for an axle capable of supporting a vehicle wheel rotatably mounted thereon, said method comprising: providing a hollow tubular blank having a central axis, a generally uniform external diameter and wall thickness and a first open end; reducing said tubular blank at a first region thereof concentric with said central axis adjacent said first end to provide a first diameter therefor and a second region thereof concentric with said central axis remote from said first end to provide a second diameter which is greater than said first diameter and less than said external diameter; forming a first transition area between said first region and said second region and a second transition area having a generally frusto-conical outer surface between said second region and a portion of said tubular blank which is free of said reducing and remote from said first end; providing a collar having a minimum inner diameter greater than said second diameter for limited clearance therebetween and including a frusto-conical inner surface widening from said minimum inner diameter to match the taper of said second transition area, said collar having a radial surface at said minimum inner diameter which is generally perpendicular to an axis of said collar; mounting said collar on said second transition area; and securing said collar to said second transition area.

4,298,156

NESTABLE AND DENESTABLE MOLDED EGG CARTONS

Richard F. Reifers, New Canaan, Conn., and Henry A. Lord, Cape Elizabeth, Me., assignors to Diamond International Corporation, New York, N.Y.

Filed Jun. 20, 1980, Ser. No. 161,621

Int. Cl.³ B65D *21/02*

U.S. Cl. 229—2.5 R **6 Claims**

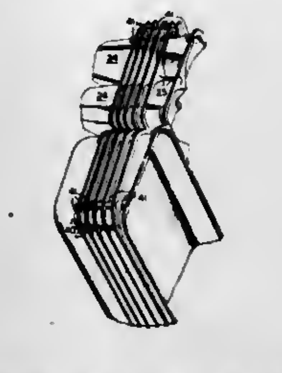

1. In an open, nestable molded egg carton having an inverted dished four-cornered rectangular cover section hingedly connected to a four-cornered rectangular cellular section and wherein each of said sections has two relatively long tapered sides and two relatively short tapered ends and wherein the inside corners of said sections are adjacent their hinged connection and the outside corners are at the outer margins of the molded egg carton, a denestable structural formation comprising

(a) a hollow first separating ledge located on and around each outside corner,

(b) hollow discrete second separating ledges located entirely in said end walls substantially immediately adjacent said first separating ledges,

(c) said second separating ledge being located outwardly from the center of said end walls,

(d) the inner surface portion of said sections between said first and second ledges being substantially, or relatively, unbroken and generally continuous in a generally vertical direction.

4,298,157

SEPARATOR AND STORAGE BOX

Richard A. DeVierno, 9508 E. Bexhill Dr., Kensington, Md. 20795

Filed Dec. 11, 1979, Ser. No. 102,615

Int. Cl.³ B65D *85/30, 5/26*

U.S. Cl. 229—35 **1 Claim**

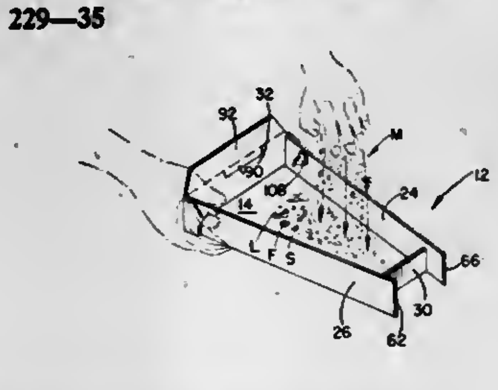

1. An integral foldable blank comprising:

a trapezoidal body having non-parallel side edges and parallel end edges;

a first rectangular end panel having a pair of end edges and a pair of side edges and being foldably attached to one of said body end edges by a foldline defined along one of said first end panel end edges;

a second rectangular end panel having a pair of end edges and a pair of side edges and being foldably attached to another of said body end edges by a foldline defined along one of said end panel side edges, said second end panel being larger than said first end panel and having an open rectangular slot defined therein on another second end panel side edge, said slot having a length larger than the length of said first end panel so that said first end panel can be accommodated therein;

a pair of equal sized polygonal side panels each having a pair of end edges and a pair of side edges and each being foldably attached to one of said body side edges by a foldline defined along one of said panel side edges, said side panels converging toward said first end panel and each having an arcuate slot defined therein adjacent one of said side panel end edges, each of said slots having one end adjacent a foldline and having another end oriented essentially parallel with another of said side panel side edges;

a third end flap having a pair of parallel side edges integrally and being attached to said another second end panel side edge along one of said third end flap parallel side edges;

a foldline extending transversely across said body and said side panels so said body and said side panels can be folded to insert said first end panel into said rectangular slot to define a closed pouch; and

a pair of tongues each foldably attached to a second end panel end edge near one of said arcuate slots, each of said tongues including a base having one edge foldably attached to a second end panel end edge, a pair of parallel side edges each being colinear with said first end panel end edges and an arcuate tongue tab on another edge thereof, said tongue tabs extending outwardly from said bases and being colinear with each other.

4,298,158

PACKAGING ELEMENT FOR PACKAGING SHEET MATERIAL

Joachim Hoppe, and Yahya Haghiri-Tehrani, both of Munich, Fed. Rep. of Germany, assignors to GAO Gesellschaft für Automation und Organisation mbH, Munich, Fed. Rep. of Germany

Filed Mar. 12, 1980, Ser. No. 129,567

Claims priority, application Fed. Rep. of Germany, Mar. 13, 1979, 2909834

Int. Cl.³ B65D *27/10*

U.S. Cl. 229—69 **9 Claims**

1. The packaging element for packaging sheet material such as banknotes, consisting of a plurality of envelopes for receiving the sheet material, said envelopes being arranged in succession and having their undersides separably attached to an auxiliary belt between the leading edge and the center of gravity, characterized in that the auxiliary belt is formed of at least one continuous tear-off strip (14) which is an integral part of the envelopes (12) and is adapted to be separated therefrom by perforated lines.

4,298,159

SOLID SLEEVE WORM CENTRIFUGE

Wolfgang Epper, Bergheim-Zieverich, and Wolfgang Heckman, Bergisch-Gladbach, both of Fed. Rep. of Germany, assignors to Klöckner-Humboldt-Deutz AG, Fed. Rep. of Germany

Filed Mar. 19, 1979, Ser. No. 21,693

Claims priority, application Fed. Rep. of Germany, Mar. 25, 1978, 2813140

Int. Cl.³ B04B *1/20*

U.S. Cl. 233—7 **11 Claims**

1. A solid sleeve worm centrifuge for the separation of solids and liquid in a solid-liquid mixture comprising:

a cylindrical portion for the separation of said mixture;
a conical portion for the discharge of separated solids, said conical portion attached in coaxially alignment with said cylindrical portion;
a conveyor worm having a cylindrical worm body portion which begins to taper in a transition region to form a conical worm body portion at one end thereof, and which is rotatable inside said centrifuge for moving solids to be discharged through said centrifuge;

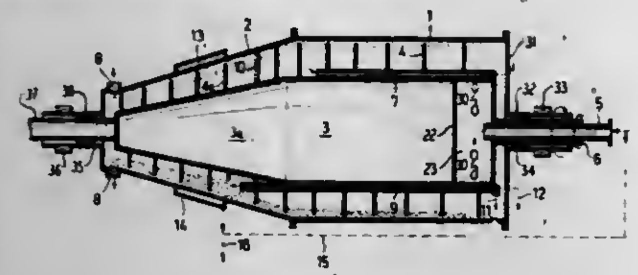

a static plate mounted on said worm conveyor in said transition region; and
a liquid withdrawal means which communicates with an interior of said conical portion of said centrifuge at a location behind said static plate in the direction of flow through said centrifuge for removing liquid from solids in said conical portion.

4,298,160
SOLID BOWL DECANTER CENTRIFUGES
Joseph F. Jackson, Halifax, England, assignor to Thomas Broadbent & Sons Limited, Huddersfield, England
Continuation-in-part of Ser. No. 908,437, May 22, 1978, abandoned. This application Aug. 3, 1979, Ser. No. 63,651
Int. Cl.³ B04B *1/00, 3/00, 5/00*
U.S. Cl. 233—7 **10 Claims**

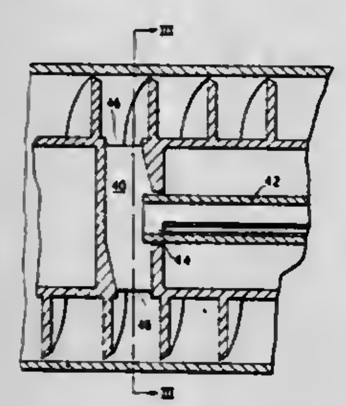

1. A method of centrifuging comprising the steps of rotating a bowl decanter at a first speed; rotating a scroll conveyor within the bowl at a second, slightly different speed for conveying separated solids to a solids discharge end of the bowl; introducing the suspension to be centrifuged into a feed compartment formed in a hub portion of the scroll conveyor; introducing a flocculating additive to the feed compartment substantially separate from the suspension; mixing said suspension and flocculating additive within said feed compartment; and delivering said mixed suspension and flocculating additive from the feed compartment to the bowl before substantial flocs have been formed.

4,298,161
CENTRIFUGE
Henry J. Ephithite, Camberley, England, assignor to Wilkinson Rubber Linatex Limited, Surrey, England
Filed Oct. 18, 1979, Ser. No. 85,989
Claims priority, application United Kingdom, Oct. 23, 1978, 41556/78
Int. Cl.³ B04B *1/20, 11/00*
U.S. Cl. 233—7 **20 Claims**

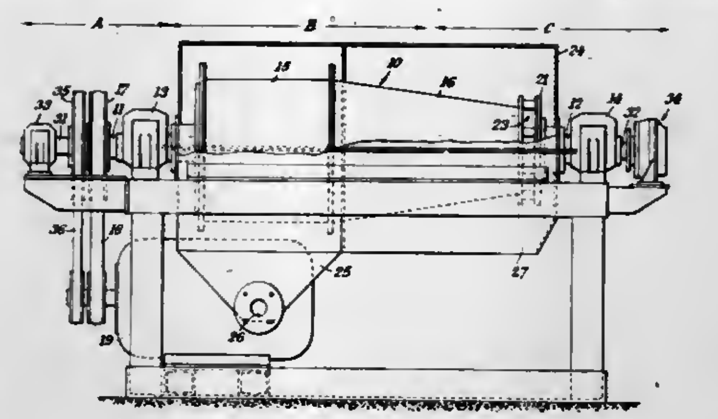

1. A centrifuge for separating a solids-liquid mixture comprising a rotatable drum having an inner surface of revolution about the rotary axis of the drum, a solids discharge outlet at one end of the drum and a liquid discharge outlet at the other end of the drum, means for feeding the solids-liquid mixture to a region adjacent the inner surface of the drum and a solids material conveyer arranged within the drum for rotation about the rotary axis of the drum at a speed slightly different from the speed of rotation of the drum and having a distal working surface formed about the rotary axis adjacent the inner surface of the drum and adapted to engage liquid-reduced solids material during rotation of the drum and the conveyer to convey it to the solids discharge outlet, while solids-reduced liquid discharges at the liquid discharge outlet at the other end of the drum, the distal working surface being provided at least in part by wear-resistant rubber material, and the means for feeding the solids-liquid mixture to the inner surface of the drum comprising a feed duct having an axial feed duct portion rotatable with the conveyer and extending along the rotary axis of the conveyer to an open end located outside the drum, wherein the open end of the axial feed duct portion communicates with a non-rotatable feed inlet which includes two non-rotatable annular seals of a wear-resistant rubber material surrounding the rotatable axial feed duct portion and engaging the outer surface thereof at axially spaced locations therealong adjacent the open end of the axial feed duct portion to form an annular chamber between the two seals and means for feeding to the chamber water under pressure whereby water seeps between the ends of the seals and the outer surface of the axial feed duct portion to lubricate the seals and to prevent the passage of the solids-liquid mixture beneath the seals.

4,298,162
DECANTER CENTRIFUGE
Per Hohne, Valby, Denmark, assignor to Alfa-Laval Separation A/S, Soborg, Denmark
Filed Jan. 25, 1980, Ser. No. 115,170
Claims priority, application Denmark, Feb. 23, 1979, 806/79
Int. Cl.³ B04B *1/20*
U.S. Cl. 233—7 **6 Claims**

1. A decanter centrifuge comprising a motor-driven rotary drum, a conveyor screw located within said drum and rotatable relative thereto for conveying solid material separated from a raw material supplied to the drum, a mechanical gearing connecting said drum and said conveyor screw, said gearing including a housing rigidly connected to said drum and an input shaft the rpm. of which determines the rpm. of the screw relative to the drum, a first positive displacement type hydraulic machine having a constant displacement volume, a second positive displacement type hydraulic machine having a variable displacement volume, first power transmitting means connecting one of said first and second hydraulic machines with the housing of said gearing, second power transmitting

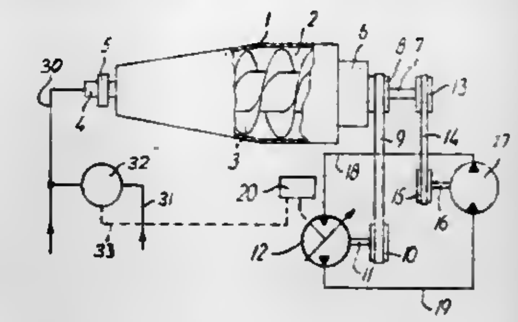

means connecting the other of said hydraulic machines with the input shaft of said gearing, and conduit means connecting said first and second hydraulic machines in a closed hydraulic circuit.

4,298,163
ELECTRONIC MULTI-ZONE TIMED TEMPERATURE CONTROL APPARATUS
John G. Richardson, Idaho Falls, and Robert W. Soldat, Shelley, both of Id., assignors to Envirotronics, Phoenix, Ariz.
Filed Oct. 3, 1979, Ser. No. 81,571
Int. Cl.³ F23N *5/20;* **G05D** *23/00*
U.S. Cl. 236—46 R **28 Claims**

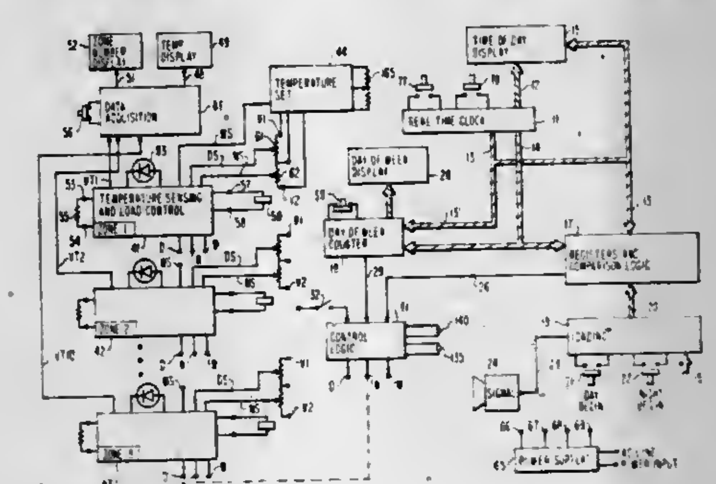

1. Timed temperature control apparatus for a zone comprising:
clock means producing time output over a repetitive time cycle;
time display means responsive to said time output to display current time;
digital logic circuit means responsive to said timed output alternately producing a day mode status output and a night mode status output;
a temperature set means providing a different temperature set output for each said day modes and night modes, each temperature set being variable and preset to a selected temperature for that mode;
temperature sensing and load control means including a sensing circuit portion having input terminals to which a temperature sensor for the zone is connected, each said sensing circuit portion having switching means responsive to said day and night mode status outputs from said temperature set outputs from said temperature set means to establish a set temperature for each mode, said temperature sensing and load control means including a load control portion with a comparator for comparing the relative magnitudes of the sensed temperature output and coupled to output terminals to which a load device for the zone is connected whereby to continuously measure the temperature in said zone during the day and during the night to actuate a load control device when the temperature drops below or goes above a selected temperature setting; and
temperature display means responsive to the temperature sensed output of said sensing circuit portion to display the temperature of the zone, said temperature sensor being a resistance-type RTD platinum film.

4,298,164
AIR CONDITIONING SYSTEM AND CONTROL THEREFOR
John E. Post, Cincinnati, Ohio, assignor to Carrier Corporation, Syracuse, N.Y.
Division of Ser. No. 53,599, Jan. 29, 1979, Pat. No. 4,238,071. This application May 5, 1980, Ser. No. 146,890
Int. Cl.³ F24F *11/04*
U.S. Cl. 236—49 **5 Claims**

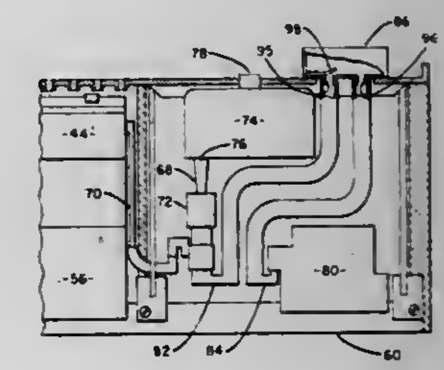

1. A method for controlling the amount of air supplied to a plurality of zones comprising the steps of:
sensing the temperatures of the zones;
directly varying the amount of air supplied to the zones in response to changes in the air temperature thereof;
sensing the temperature of the air supplied to the zones;
increasing the amount of air supplied to a first preselected zone in response to the temperature of the supplied air rising above a predetermined value indicating the start of a warm-up period; and
substantially restricting the amount of air supplied to a second preselected zone in response to the temperature of the supplied air rising above in predetermined value to decrease the amount of air entering the second zone during the warm-up period to prevent overheating thereof.

4,298,165
CONTROLS FOR HEATING SYSTEM
Milton A. McKinley, Palisades Park, N.J., assignor to Sargeonies Limited, Mount Kisco, N.Y.
Filed Dec. 28, 1979, Ser. No. 108,133
Int. Cl.³ F24D *3/00*
U.S. Cl. 237—8 R **6 Claims**

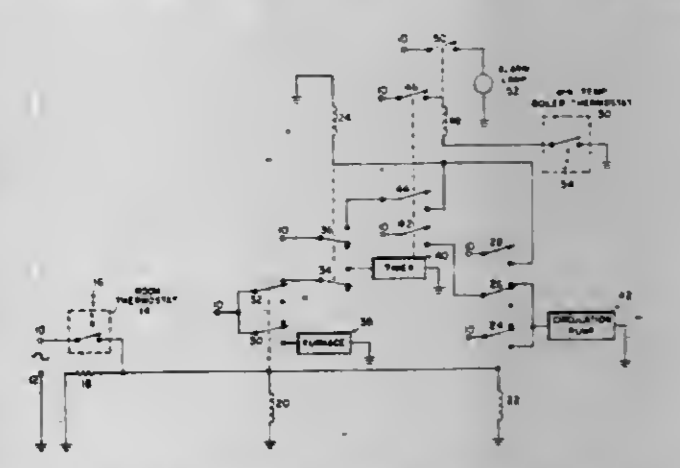

1. For use in a heating system obtaining electrical energy from a suitable source wherein an enclosed region is heated by hot water flowing through a heat exchanger disposed in the

region, the hot water being supplied from a boiler heated by a furnace which is electrically actuated and deactuated, the water being circulated between the boiler and the heat exchanger by a circulator pump which is electrically actuated and deactuated, a thermostat being disposed in the space to control the temperature therein and including a first electrical switch which is closed when additional heat must be supplied to the region and which is otherwise open, apparatus comprising:

a minimum temperature thermostat for said boiler connected in circuit with the furnace to maintain the temperature of the water in the boiler at a selected minimum temperature, the minimum thermostat including a second electrical switch which is closed when the temperature of the boiler water is below said minimum and which is otherwise open;

first means for actuating said furnace and said pump when said first switch is closed and for deactuating the furnace and the pump when the first switch is open;

a timer which is automatically reset, said timer when electrically actuated operating for a preselected time period and then is automatically deactuated;

second means for actuating said pump and said timer when said first means deactuates said furnace and pump, whereby said pump continues to circulate said water when said first switch is open and said furnace is deactuated while said timer remains actuated;

third means for deactuating said pump when said timer is deactuated and said first switch is open;

alarm signal producing means; and

a comparator coupled between the timer, the second switch and the alarm means to energize the alarm means when the timer is actuated and at the same time the second switch is closed.

4,298,166
PORTABLE WATER DRINKING FOUNTAIN
Joe I. White, 7709 Byrum Dr., and Elton G. Hawley, 1426 Springwood La., both of Charlotte, N.C. 28210
Filed Nov. 8, 1978, Ser. No. 958,551
Int. Cl.³ E03B *9/20*
U.S. Cl. 239—24 **1 Claim**

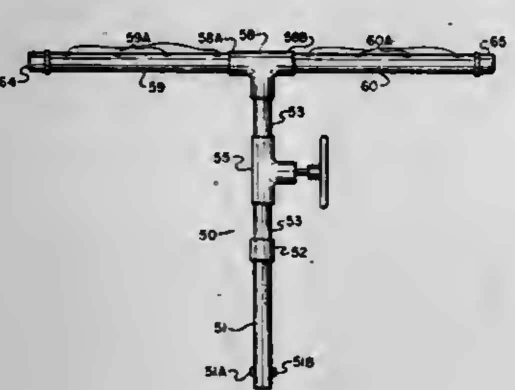

1. In a water supply system for irrigating land, having a pressurized water supply, an underground water supply conduit fluidly connected to said water supply and at least one outlet valve fluidly connected to said conduit and projecting upwardly to the surface of the ground to be irrigated, said outlet valve including means for simultaneously matingly receiving an irrigation sprinkler and activating a flow of water to said sprinkler, the combination therewith of a portable water fountain comprising:

a. coupling means for simultaneously fluidly interconnecting with said outlet valve and activating a flow of water;

b. a drinking fountain head comprising an elongated tubular member, closed at both ends and having a plurality of spaced-apart apertures in the upper axial walls thereof for providing a plurality of upwardly directed streams of water for drinking; and

c. an upright tubular leg fluidly interconnecting said drinking fountain head to said coupling means at a position perpendicular thereto and intermediate its close ends for supplying water to said fountain head and supporting said fountain head in vertically spaced relation above the ground, said tubular leg including valve means for regulating the flow of water to said fountain head.

4,298,167
MIST GENERATOR
Karl-Heinz Stahl, Zum Felchen 20, D-7770 Überlingen, Nussdorf, Fed. Rep. of Germany; Fritz Fend, Regensburg, and Werner Stahl, Überlingen, both of Fed. Rep. of Germany, assignors to Karl-Heinz Stahl, Überlingen, Nussdorf, Fed. Rep. of Germany
Filed Jul. 26, 1979, Ser. No. 60,778
Claims priority, application Fed. Rep. of Germany, Aug. 11, 1978, 2835338
Int. Cl.³ A01M *7/00*
U.S. Cl. 239—129 **7 Claims**

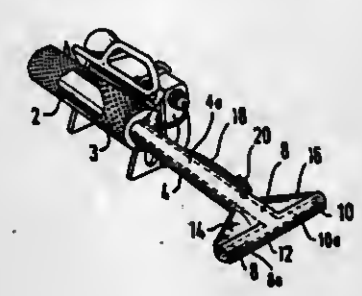

1. A mist generator particularly for spraying pesticides on plants comprising: a pulsating combustion chamber; a resonator tube connected with said pulsating combustion chamber; a distribution tube releasably connected with said resonator tube; at least two exhaust nozzles attached with said distribution tube; and a diffuser tube having branched ends pieces; with said resonator tube, said distribution tube and said exhaust nozzles being concentrically enclosed within said diffuser tube.

4,298,168
POWDER DISPENSING ASSEMBLY
Walter J. Rozmus, Traverse City, Mich., assignor to Kelsey-Hayes Company, Romulus, Mich.
Filed Apr. 14, 1980, Ser. No. 139,907
Int. Cl.³ A01C *3/06*
U.S. Cl. 239—659 **16 Claims**

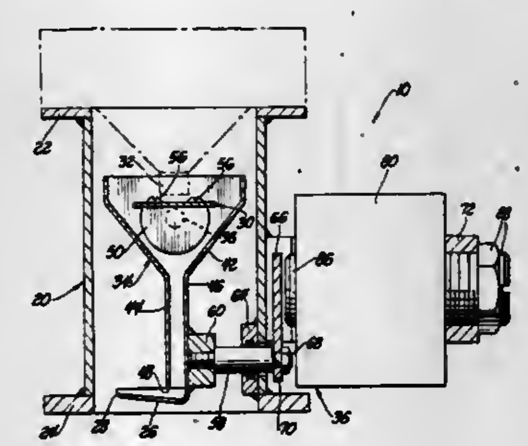

1. A powder dispensing assembly (10) comprising; support structure (20), a dispensing platform (26) supported by said support structure (20) for receiving powder and having a distal lip (28) over which particles of powder move to define a falling curtain of powder particles, a supply platform (30) supported by said support structure (20) for receiving powder and supplying the powder to said dispensing platform (26), flow control means (34) for establishing a flow path of the powder from said supply platform (30) to said dispensing platform (26), said assembly characterized by drive means (36) for vibrating said dispensing platform (26) to move particles thereover and over said lip (28) and for moving said supply platform (30) in unison with said dispensing platform (26) to move powder from said supply platform (30) and through said flow control means (34) to said dispensing platform (26).

4,298,169
SELECTIVE FLOCCULATION, MAGNETIC SEPARATION, AND FLOTATION OF ORES
Iwao Iwasaki, St. Paul, Minn., assignor to The Regents of the University of Minnesota, Minneapolis, Minn.
Filed Sep. 26, 1979, Ser. No. 79,074
Int. Cl.³ B02C *23/18*
U.S. Cl. 241—16 **13 Claims**

1. A method of concentrating low-grade ores containing residual magnetite, which method comprises:

(A) mixing said ore with water and grinding to a fineness sufficient to substantially liberate the desired mineral values in said ore,

(B) mixing said finely divided ore, containing magnetite, with a flocculating material selected from the class consisting of carbohydrate and synthetic polymerized flocculating agents to induce selective flocculation of the desired mineral on nuclei of ore particles containing residual magnetite,

(C) subjecting said flocculated mineral to magnetic separation,

(D) recovering the flocs of mineral, and

(E) discarding the non-magnetic gangue.

4,298,170
SHEAR BAR FOR FORAGE HARVESTERS OR THE LIKE
Benjamin H. Snavely, New Holland, Pa., assignor to Sperry Corporation, New Holland, Pa.
Filed Nov. 21, 1977, Ser. No. 853,379
Int. Cl.³ B02C *18/16*
U.S. Cl. 241—222 **5 Claims**

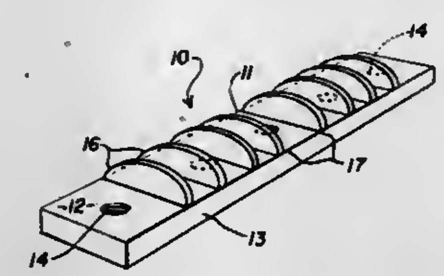

1. In a forage harvester having a rotatable cutterhead, a shear bar arranged to cooperate with the cutterhead to reduce crop materials to substantially uniform lengths, an infeed mechanism to direct a mat of crop material across the shear bar into engagement with the cutterhead, an improved shear bar comprising:

a substantially rectangular plate like base having a top surface with length and width dimension, an opposing bottom surface, and first and second opposing shear surfaces extending the full length dimension perpendicular to said top and bottom surfaces; and

a plurality of fixed substantially identical projections extending from said top surface of said base in a direction opposite said bottom surface, said projections spaced apart along the length of said base and each having a primary dimension substantially parallel and equal to the width of said base, whereby each projection extends across said top surface between said first and second shear surfaces.

4,298,171
WINDING APPARATUS FOR ENDLESS FILAMENTS HAVING AN AUTOMATIC BOBBIN TUBE CHANGER
Peter Flückiger, and Kurt Schefer, both of Winterthur, Switzerland, assignors to Rieter Machine Works, Ltd., Winterthur, Switzerland
Continuation of Ser. No. 945,330, Sep. 25, 1978, abandoned. This application Mar. 12, 1980, Ser. No. 129,625
Claims priority, application Switzerland, Sep. 23, 1977, 11627/77
Int. Cl.³ B65H *54/02, 54/42, 67/04*
U.S. Cl. 242—18 A **25 Claims**

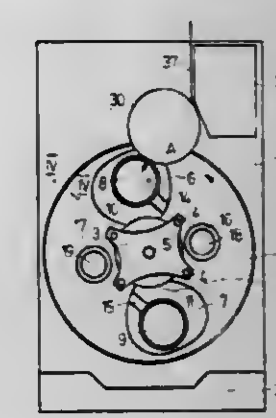

1. A winding apparatus for endless filaments comprising

a friction drive drum;

a rotatable disc having at least two apertures therein;

a pair of bobbin chucks, each said chuck capable of receiving at least one bobbin tube thereon and being aligned with and passing through a respective aperture in said disc;

an accelerating ring disposed concentrically of said discs, said ring having a diameter to project into the plane range of said apertures;

means for rotating said ring independently of said disc;

means for pivoting said disc through a predetermined arc for alternately placing said bobbin chucks in position for said bobbin tubes thereon to be engaged by said drive drum for winding endless filaments;

means mounted on said disc for moving each said bobbin chuck axially with respect to said disc between a working position wherein the bobbin tube received on a respective bobbin chuck is axially spaced from a plane containing said accelerating ring and a retracted position wherein the bobbin tube received on a respective bobbin chuck is located in a plane containing said accelerating ring; and

means for pivoting each bobbin chuck about an axis parallel to and radially offset from said accelerating ring to position a bobbin tube received on one of said chucks in contact with said accelerating ring when said one bobbin chuck is in said retracted position and to position a bobbin tube received on the other of said chucks in contact with said drive drum when said other bobbin chuck is in said working position.

4,298,172
METHOD AND APPARATUS FOR CONTROLLING A THREAD STORAGE AND FEEDER DEVICE
Jerker Hellstrom, Nol, Sweden, assignor to Aktiebolaget IRO, Ulricehamn and Aros Electronics AB, Askim, both of, Sweden
Continuation of Ser. No. 960,624, Nov. 14, 1978, abandoned. This application Jul. 18, 1980, Ser. No. 169,991
Claims priority, application Sweden, Nov. 14, 1977, 7712808
Int. Cl.³ B65H *51/20*
U.S. Cl. 242—47.01 **13 Claims**

1. A method for controlling the rotational speed of a winding member of a thread storage and feeding device for a thread processing machine which includes a thread storage drum for intermediate storage of thread from a supply bobbin and an electric motor for rotating said winding member, comprising the steps of: detecting the amount of the thread supply on said

thread drum and providing an electric signal related thereto; providing an electric signal representative of the average rate of consumption of thread from said drum; combining both of

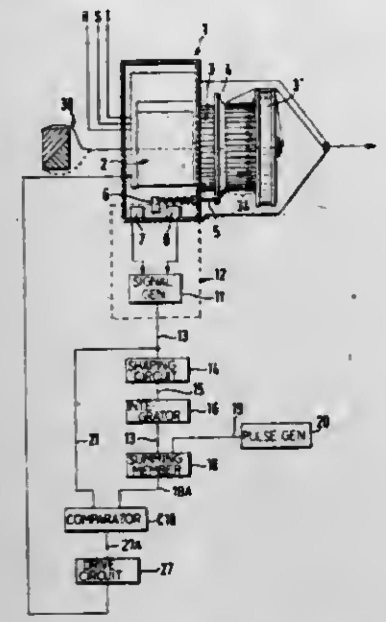

said electric signals to provide an electric control signal; and using said control signal to control the rotational speed of said motor.

4,298,173
APPARATUS FOR UNWINDING OF A MATERIAL WEB
Kjell A. I. Johansson, Styrmansgatan 19, 311 00 Falkenberg, Sweden
Filed Aug. 12, 1980, Ser. No. 177,693
Claims priority, application Sweden, Aug. 16, 1979, 7906848
Int. Cl.³ B65H *19/08, 75/02*
U.S. Cl. 242—58 **5 Claims**

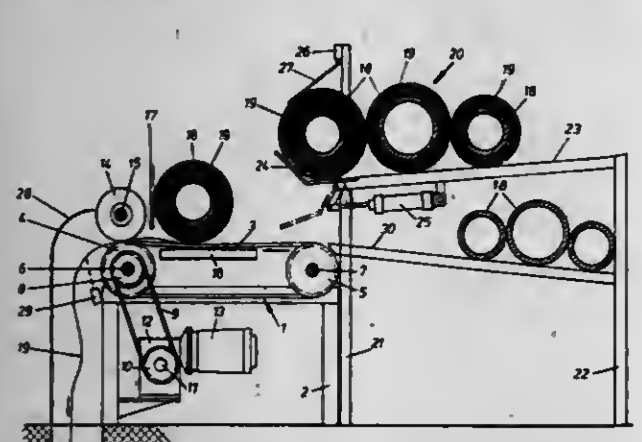

1. An apparatus for unwinding a material web, for example a paper web, which is wound up onto a core, for example a paper core, characterised in that a device is disposed to support the core with the material web and to rotate the core with the material web during retention of the core with the material web in a position during unwinding of the material web; and that first means are provided to discontinue the rotation when the core is empty, whereupon the core rolls away from said apparatus because of its own rotation.

4,298,174
WIRE TAKE-OFF DEVICE
Joseph J. Kovaleski, Easton, Conn., assignor to Wyrepak Industries, Inc., Bridgeport, Conn.
Filed May 21, 1980, Ser. No. 151,943
Int. Cl.³ B65H *49/00*
U.S. Cl. 242—128 **31 Claims**

20. An apparatus for de-reeling wire from multiple wire-carrying spools in succession and without interruption, comprising in combination:

(a) a pair of spools,
(b) means for supporting the spools with one end of each spool being free, the axis of each spool generally converging toward a guide area,
(c) a wire guide disposed at said guide area,
(d) means mounting said guide for swiveling movement about an axis askew with respect to those of the two spools, such that the guide can swing between a first position facing the free end of one of the spools, and a second position facing the free end of the other of said spools, as one spool becomes depleted and de-reeling from the other spool commences,
(e) means providing a rotatable hub at the said end of one of the spools,
(f) a freely-mounted take-off wheel located at the said free end,

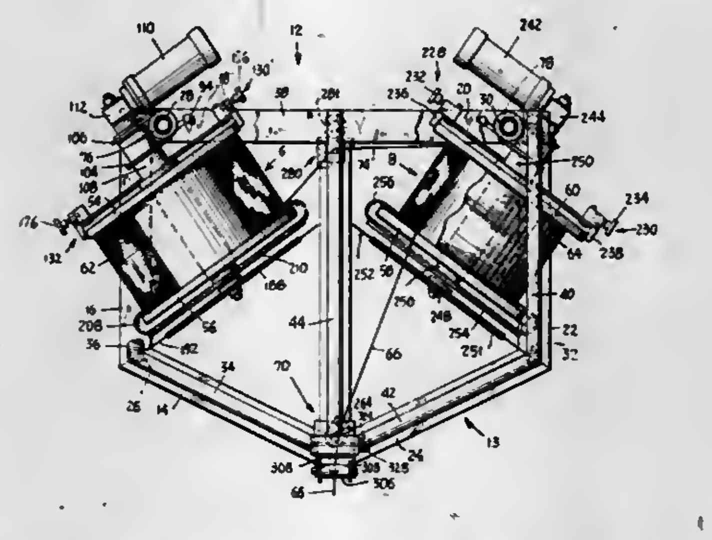

(g) a plurality of substantially radially disposed, flexible and slender spoke-like, wire-restraining tines fixedly supported at their adjoining inner ends on said hub, said tines extending past the periphery of the wheel, the outer end portions of said tines yielding to and being shifted peripherally by the unreeling strand of wire, said wire strand being thereby restrained from wholly free travel around the periphery of the one spool end, and being prevented from freely unwinding around the one spool end and kinking during slow wire speeds or halting of the wire, and
(h) powered means connected with said hub for rotatably driving the same at a rate which is less than the speed at which the wire strand traverses the periphery of said one spool end, during relatively faster wire take-off speeds.

4,298,175
AIRPLANE WING AND UNDERCARRIAGE CONSTRUCTION
T. Desmond Earl, Buffalo, N.Y., assignor to Textron Inc., Providence, R.I.
Filed Mar. 21, 1979, Ser. No. 22,527
Int. Cl.³ B64C *1/00;* **B60Y** *3/08*
U.S. Cl. 244—13 **5 Claims**

1. An amphibious airplane having an inflatable trunk type air cushion confining undercarriage thereunder;
said airplane having a watertight fuselage and wing structures extending generally laterally thereof and merging therewith in aerodynamically efficient configuration;
said wing structures each comprising an outer wing component and an inner wing component which is three-dimensionally enlarged with respect to its outer wing component and which in frontal and sidewise views merges with said fuselage to provide an enlarged broad base support structure for said undercarriage as well as a smooth and aerodynamically efficient downwardly facing surface formed in part by said fuselage and said inner wing components, said inner wing components extending both forwardly and rearwardly

of their outer wing components but to a greater extent forwardly thereof so that said surface is of egg-shaped planform with the broad end of such shape located behind the wing center line;
said undercarriage comprising an inflatable trunk of generally toroidal configuration formed of elastic sheet material mounted on and generally conforming to the egg-shaped perimeter of said surface; whereby, when said trunk is inflated the center of pressure thereof is disposed forwardly of

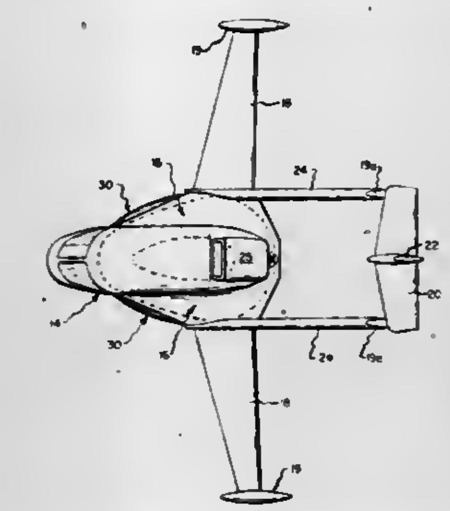

the center of aerodynamic lift of said airplane and when the trunk is deflated said sheet material resiliently clings snugly against said surface, the maximum track-width of said trunk when inflated is at least 20% of the total wing span dimension of the airplane, the maximum track-width of said trunk when inflated is at least 60% greater than the metacenter height of the airplane, and the height of the airplane center of gravity from the air cushion support level is no more than 50% of the maximum track-width of said trunk when inflated.

4,298,176
REMOTE REFUELING STATION
John H. Kendall, Cypress, Calif., assignor to McDonnell Douglas Corporation, Long Beach, Calif.
Filed Mar. 1, 1979, Ser. No. 16,368
Int. Cl.³ B64D *39/00*
U.S. Cl. 244—135 A **3 Claims**

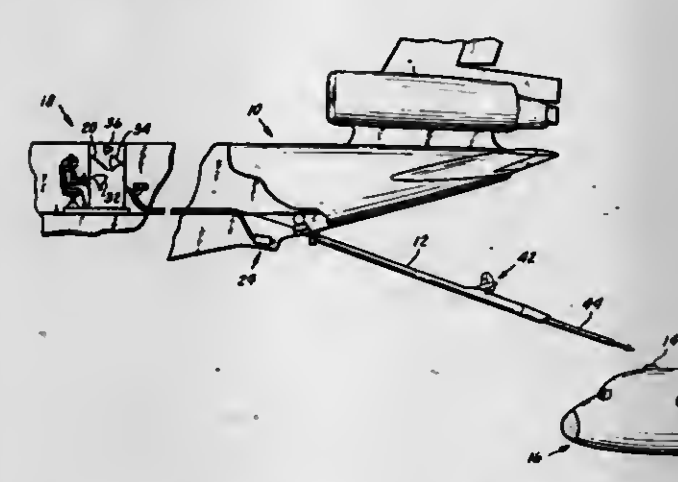

1. A remote refueling station to control the transferring of fuel from a tanker aircraft to a receiver aircraft by means of a maneuverable extensible refueling boom connected to said tanker aircraft comprising:
a stereoscopic viewing system located in said tanker aircraft comprising a left video camera, a right video camera spacially separated from said left video camera, said cameras directed for observation of said refueling boom and said receiver aircraft, a first video monitor, electrically connected to said left video camera, a first filter to polarize the output image of said first video monitor in a first direction, a second video monitor electrically connected to a said second video camera, a second filter to polarize the output of said second video monitor image in a second direction 90° to the direction of the polarization of said first video monitor, a screen to positionally combine and transmit the images from said first video monitor and said second video monitor, cross-polarized eye glasses to separate the image of said first video monitor from the image of said second video monitor on said screen whereby said boom operator receives the picture from said right video camera in his right eye and from said left video camera in his left eye;
first controller means generating an electric command signal which maneuvers the boom in azimuth and elevation;
second controller means generating an electrical command signal which activates the extensible portion of the boom; and
a third video camera located in the rear of the tanker aircraft and directed to the rear to obtain a view of the approach of the receiver aircraft, and third video monitor electrically connected to said third video camera for viewing the output of the third video camera.

4,298,177
AIRCRAFT SAFETY APPARATUS
John J. Berlongieri, 14873 Lincoln Ave., Dolton, Ill. 60419
Filed Nov. 9, 1979, Ser. No. 92,794
Int. Cl.³ B64D *17/80*
U.S. Cl. 244—139 **7 Claims**

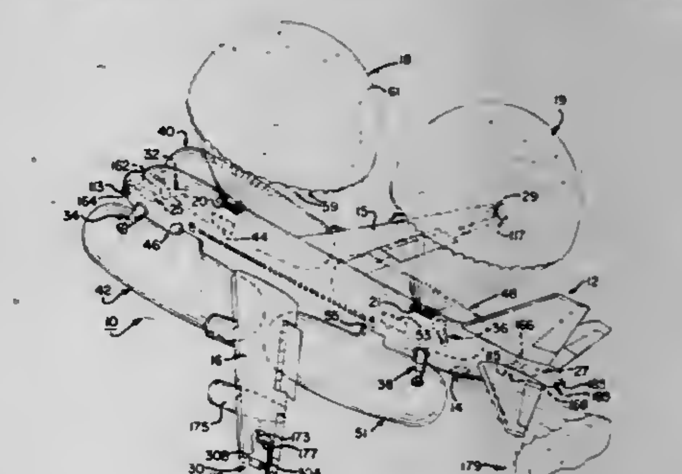

1. In safety apparatus for use on aircraft to facilitate the in-flight maneuvering thereof to help overcome the malfunctioning thereof, the combination comprising: front parachute means mounted operatively at the front portions of the aircraft for adding to the buoyancy of the aircraft during landings thereof; rear parachute means mounted operatively at the rear portion of the aircraft for adding to the buoyancy of the aircraft during the landing thereof; means for moving said front and rear parachute means into their operating position; a plurality of auxiliary jet propulsion units containing fluid under pressure for propelling the aircraft to aid in its maneuverability; port means of at least some of said auxiliary jet propulsion units mounted on the aircraft to direct fluid under pressure laterally away therefrom to cause lateral reaction movement of the aircraft for steering purposes; said means for moving said front and rear parachute means into their operating position includes an ejection assembly, said assembly including a storage compartment for one of said parachute means, the floor of the aircraft having an opening therein, a movable floor door means for covering over the opening in the floor with said storage compartment being stored beneath said floor, means defining an opening in the ceiling of the body of the aircraft, and a movable ceiling door means for covering over the opening in the ceiling, means for raising said compartment from beneath the floor through the opening therein to said opening in said ceiling, and means for ejecting the contents of the compartment through the opening in the ceiling of the aircraft,

wherein said means for ejecting includes parachute ejecting spring means and an electrical solenoid for maintaining said spring means in a retracted position.

4,298,178
ROVING GEOSYNCHRONOUS ORBIT SATELLITE MAINTENANCE SYSTEM
Edward J. Hujsak, La Jolla, Calif., assignor to General Dynamics, San Diego, Calif.
Filed Jan. 10, 1980, Ser. No. 111,113
Int. Cl.^{3} B64G *1/00, 1/64*
U.S. Cl. 244—158 R **4 Claims**

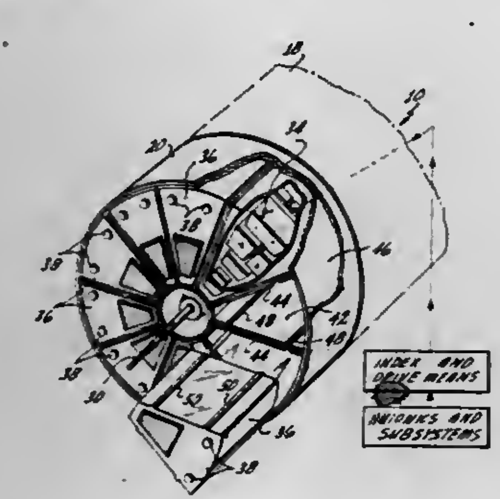

1. A system for servicing orbiting satellite stations comprising,
- a maintenance vehicle capable of orbiting in the geosynchronous corridor and having means for rendezvousing and berthing with said satellite on command from another source,
- means in said vehicle for replacing parts of said satellite with parts from said vehicle when said vehicle is berthed with said satellite for repair and maintenance of said satellite, said parts of said orbiting satellite are operating hardware packed in modules similar to the module in said orbiting satellite, and
- a rotatable circular cradle with said modules located in said cradle, said vehicle further including means for positioning an empty position in said cradle adjacent said orbiting satellite for removing a module to be replaced and rotating said cradle so that a module is juxtaposed the now empty position in the satellite and for ejecting a new module into said satellite.

4,298,179
VITAL CROSS FIELD TRANSFORMER CIRCUIT ARRANGEMENT FOR RAILROAD SIGNALING SYSTEMS
Heinz Gilcher, Export, Pa., assignor to American Standard Inc., Swissvale, Pa.
Filed May 31, 1979, Ser. No. 44,124
Int. Cl.^{3} B61L *21/06*
U.S. Cl. 246—34 R **9 Claims**

1. A vital cross field transformer circuit arrangement, for registering the presence or absence of a selected one of two input signals, comprising,
- (a) a cross field transformer with interrelated main and modulating magnetic circuits, a primary winding wound on each magnetic circuit, and a secondary winding wound on said main magnetic circuit,
- (b) a first input means coupling the modulating primary winding to a first source of alternating current signals of a preselected frequency and operable for supplying only signals of said preselected frequency to the associated winding,
- (c) a second input means coupling the main primary winding to a second source of alternating current signals of said preselected frequency and within a predetermined phase relationship to said first source signals,
- (1) said second input means operable for supplying only signals of said preselected frequency to said main primary winding,
- (d) said cross field transformer responsive to said signals from said first and second input means for producing secondary winding output signals of double said preselected frequency only when both input signals are present and within said predetermined phase relationship,
- (e) a registry means normally occupying a first condition and operable to a second condition, and
- (f) output means coupled to said secondary winding and responsive only to signals of double said preselected frequency for operating said registry means to its second condition to register the presence of said second source signals.

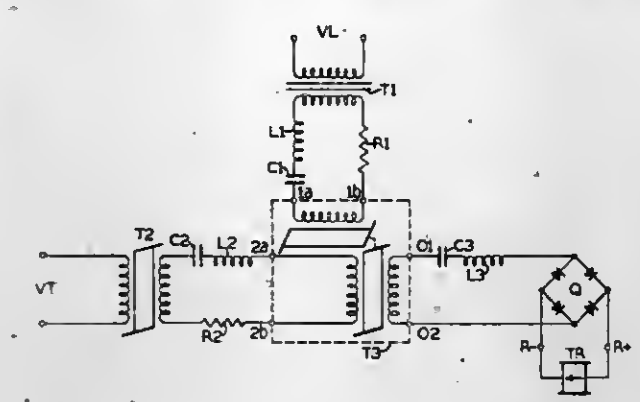

4,298,180
METHOD OF REPAIRING STEELWORKS INGOT MOULDS AND CAST-IRON STEELWORKS INGOT MOULD
Egon Evertz, Vorlander Strasse 23, 5650 Solingen, Fed. Rep. of Germany, and R. Seybold, Solingen, Fed. Rep. of Germany, assignors to Egon Evertz, Solingen, Fed. Rep. of Germany
Filed Jul. 5, 1979, Ser. No. 54,873
Claims priority, application Fed. Rep. of Germany, Jul. 5, 1978, 2829448
Int. Cl.^{3} B22D *7/06;* **B23P** *6/04*
U.S. Cl. 249—135 **13 Claims**

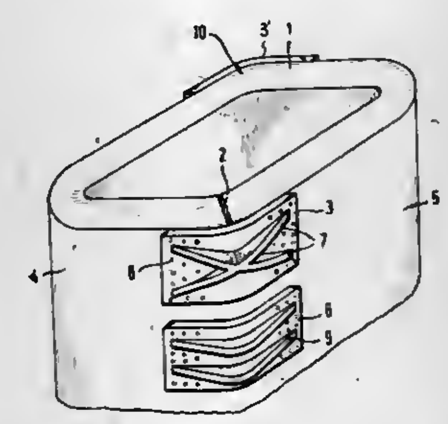

1. A method of repairing steelworks ingot moulds made of cast iron and having corners in which continuous cracks form, comprising, on appearance of a first longitudinal crack in a wall at a corner of the mould, the steps of securing to the exterior of the mould a series of patching plates in succession in the direction of said longitudinal crack, the plates extending on opposite sides of the crack, likewise securing to the exterior of the mould at the corner diametrically opposite said corner having the crack therein, a second series of patching plates diametrically opposite to the first mentioned patching plates, providing reinforcing ribs which are shaped to match the contour of the mould wall at the corner adjacent said crack and said diametrically opposite corner, arranging said reinforcing ribs on said first mentioned patching plates substantially transversely to the length of the crack and likewise on said second series of patching plates diametrically opposite said first mentioned patching plates, and subsequently securing said reinforcing ribs to said patching plates.

10. In a steelworks ingot mould of steel-reinforced cast iron having corners and which is reinforced by externally applied patching plates in a corner region having a longitudinal crack therein the improvement comprising a second series of patching plates likewise externally applied to the corner region diametrically opposite the first mentioned corner region and diametrically opposite to the first mentioned plates, externally applied reinforcing ribs on the first mentioned plates disposed substantially transversely to the length of the crack and likewise said second series of plates diametrically opposite to said ribs on the first mentioned plates.

4,298,181
ELECTRONIC ACTUATED BLEED VALVE
Anthony P. Corrado, Totowa, and Vincent P. Marchese, Morris Township, Morris County, both of N.J., assignors to EMX Controls, Inc., South Walpole, Mass.
Filed Jul. 9, 1979, Ser. No. 56,104
Int. Cl.^{3} F16K *31/02*
U.S. Cl. 251—129 **2 Claims**

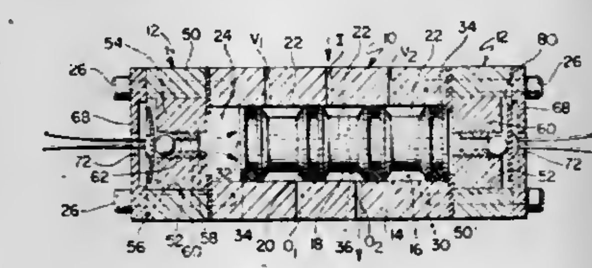

1. A bleed valve assembly including a housing, a bore disposed in said housing, a valve seat mounted in said housing adjacent to and communicating with said bore, a fluid flow orifice terminating at said valve seat, a substantially planar piezoelectric crystal beam mounted within said bore by contact with said bore solely at spaced peripheral edge portions thereof such that central portions thereof are free to move laterally with respect to said valve seat, a separate valve element disposed between said crystal and said valve seat, said element cooperatively supported in such position by mutual contact with said crystal and said valve seat, means for energizing said crystal so as to laterally bend said central portions so as to move said element respectively into contact with and away from said valve seat to open and close said valve assembly, the planar perimetric configuration of said crystal differing from the cross-sectional configuration of said bore, said bore being cylindrical and said crystal being of generally rectangular configuration, and a ledge inwardly extending from said bore and in contact with planar face surface portions of said crystal opposite from that surface proximal said valve seat, said ledge being circular and said crystal being square, the diagonal dimensions of said crystal being just slightly less than that of the diameter of said bore, and the diameter of said circular ledge being just slightly greater than the length of one of the sides of said crystal, whereby only the corner portions of said crystal are supported by said ledge.

4,298,182
LOCKING FLUID VALVE
Duane C. Balch, 3827 Briarwood St., Napa, Calif. 94558
Filed Jul. 17, 1980, Ser. No. 169,889
Int. Cl.^{3} F16K *1/00, 35/02, 31/60*
U.S. Cl. 251—251 **6 Claims**

1. A locking drain valve assembly comprising:
- a. a valve housing 1 having an upper wall 2, side walls 3 and bottom wall 4 including;
  - (1) a drain passage 6 formed through said housing having an inlet opening 7 in said top wall and an outlet opening 8 in said bottom wall,
  - (2) a transverse passage 12 formed through said side wall intersecting said drain passage,
  - (3) a valve seat 13 formed in said transverse passage at the intersection of said drain passage,
  - (4) hinge attachment means 14 formed in said housing and positioned offset from said transverse passage;
  - (5) catch means 16 formed in said housing at a selected distance from said hinge attachment means;
- b. a valve piston member 17 formed for reciprocation within said transverse passage and dimensioned for sealing engagement with said valve seat in a closed position and away from said valve seat in an open position,
- c. a piston closure member 18 including:
  - (1) pivot means 19 for pivotal attachment to said hinge attachment means 14,

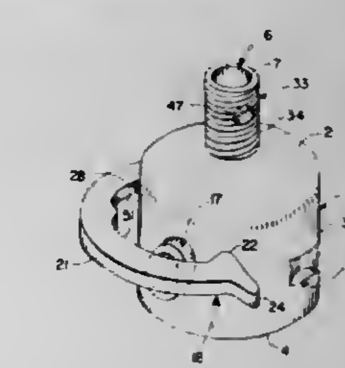

  - (2) a spring lever portion 21 extending outwardly from said housing having engaged and unengaged positions,
  - (3) latch means 22 formed in the distal end 27 of said piston closure member at a selected arcuate distance from said hinge attachment means 14 which in its unstressed state is less than the arcuate distance of said catch 16 from said hinge attachment means 14 so that when said piston closure member is in said engaged position said spring lever portion is in tension,
  - (4) grip means 24 extending from said distal end 27 for receiving a finger or tool for moving said piston closure member.
  - (5) piston engagement means 26 connected to said piston closure member for engaging said valve piston member and urging said valve piston member toward said closed position;
- d. spring means 31 connected to said housing and urging said valve piston member to said open position, and
- e. connection means 33 operatively connecting said drain passage in said housing and adapted for connection to a fluid source.

4,298,183
WATER TAP
Youichi Kawakami, Hamamatsu, Japan, assignor to Mizue Kawakami, Hamamatsu, Japan
Filed Mar. 4, 1980, Ser. No. 127,128
Claims priority, application Japan, Mar. 13, 1979, 54-31926[U]
Int. Cl.^{3} F16K *31/524;* **G05G** *5/06*
U.S. Cl. 251—263 **6 Claims**

1. A water tap comprising:
- a main body having inflow and outflow passages, a partition wall for partitioning the interior of the main body into said inflow and outflow passages, and a communication hole in said partition wall providing fluid communication between said inflow and outflow passages;
- a valve body having one end and the other end which is located further away from said communication hole than

said one end thereof; said valve body disposed in said main body and being movable between a first position in which said one end of said valve body is abutted against said partition wall to close said communication hole in a watertight fashion and a second position in which said one end of said valve body is located away from said communication hole to permit said communication hole to be opened;
urging means disposed between said main body and said valve body and urging said valve body into said second position;
an operating lever having one end mounted in said main body for universal pivotal movement, one end of said operating lever being provided with a pair of grooves extending along a plane including a center axis of said main body, one of which is arranged at one side of said one plane and the other of which is arranged at the other side of said one plane; a cam surface provided on said one end of said operating lever, arranged between said pair of grooves, extending in said plane and slidably contacting

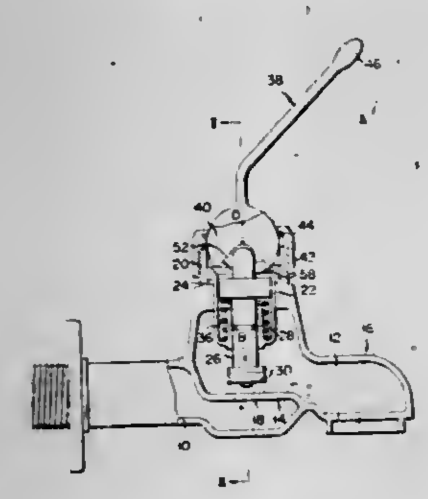

with said other end of said valve body for moving said valve body into said first position when said operating lever is rotated in one direction in the plane and for moving said valve body into said second position when said operating lever is rotated in a direction opposite to said one direction;
rotating means provided between said one end of said operating lever and said other end of said valve body and permitting said one end of said operating lever to be rotated by an urging force of said urging means in a direction transverse to said one plane; and
a pair of projections provided on said other end of said valve body and extending in the said pair of grooves whereby rotation of said operating lever in a direction transverse to said one plane causes said projections to be frictionally held in said grooves and thereby hold said operating lever in a selected position.

4,298,184
VALVE SEAL FOR A PRESSURE MEDIUM CONTROLLING VALVE
Wolfgang Grünert; Johann Huber, both of Munich, and Kurt Rheindt, Freilassing, all of Fed. Rep. of Germany, assignors to Knorr-Bremse GmbH, Munich, Fed. Rep. of Germany
Filed Mar. 6, 1980, Ser. No. 127,860
Claims priority, application Fed. Rep. of Germany, Mar. 6, 1979, 2908631
Int. Cl.³ F16K *25/00;* **F16J** *9/06, 15/22*
U.S. Cl. 251—357 **3 Claims**

1. A valve seal for a pressure medium controlling valve comprising a valve member having a first surface directed toward a valve seat, there being an annular groove in said first surface and having a bottom surface, said annular groove further having a cylindrical first side directed toward the pressure medium and a second side with an undercut therein, a resilient sealing ring in said annular groove and having a first surface directed toward the valve seat, a first peripheral surface of said sealing ring being directed toward the pressure medium, an annular elastically deformable sealing lip having one end attached to a portion of said peripheral surface of the sealing ring away from said valve member first surface and adjacent said bottom surface of the groove and having a second end extending angularly outwardly toward said valve member first surface to abut resiliently against said groove

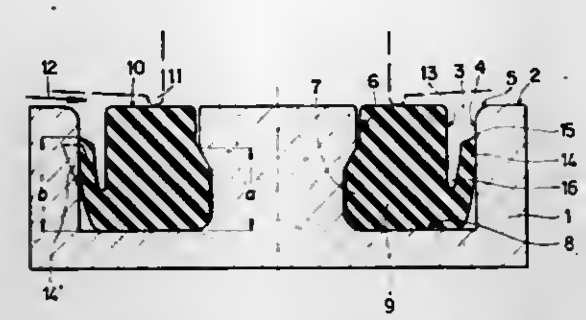

cylindrical first side to define a sealing edge, there being an annular space between the remaining portion of said peripheral surface of the sealing ring and said sealing lip, the length of said sealing lip being about ⅔ of the axial dimension of said sealing ring disposed adjacent said cylindrical side of the groove and corresponding to the depth of said annular groove, said sealing ring having a second peripheral surface directed toward said annular groove second side and shaped to conform to said second side such that said sealing ring is secured within said groove.

4,298,185
FENCING DEVICE
Paul H. Janssen, R.R. #1, Stanberry, Mo. 64489
Filed May 5, 1980, Ser. No. 146,281
Int. Cl.³ E04H *17/02*
U.S. Cl. 256—41 **2 Claims**

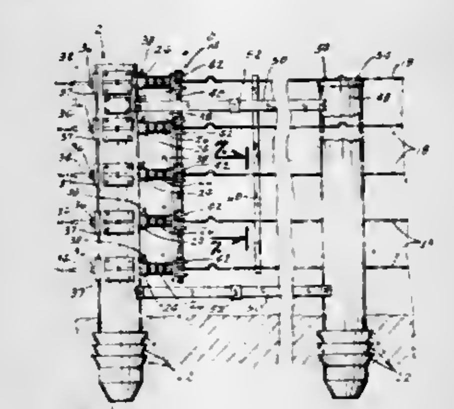

1. A fencing system for securing a fence of the type having wires, including setting and maintaining the wires at a predetermined tension, comprising:
a first post having a bottom portion extending into the ground for rigidly fixing said post in one location;
a wire stretching device for stretching the wire, having turning rods and yokes, the rods passing through the yokes and wire wrapped there around as the rod is rotated to stretch the wire and a locking device, said locking device preventing the rod from rotating;
a tensioning unit connecting the stretching device to the first post including a first and second sleeve, the second sleeve being generally disposed within the first sleeve, and a spring, said spring at one end being adjustably connected to the first sleeve and connected to the second sleeve at its opposite end;
at least one field post, said field post having a bottom portion extending into the ground and being generally spaced away from the first post along the run of the wire having

one side thereof flattened along its longitudinal axis in juxtaposition with the wire, and guides, said guides extending outward from the flattened side of the field post underneath the wire and a rod, said rod extending downward through the guides and including a semicircular top portion extending onto the top of the post with the wire positioned between the post and the rod; and
a third post having a bottom portion extending into the ground, said third post being positioned at the opposite end of the wire as is the first post and onto which is securely connected the wire.

4,298,186
HOLLOW PLASTIC BARRICADE
Geoffrey M. Glass, 21 Bridlewood Rd., Northbrook, Ill. 60062
Filed May 21, 1980, Ser. No. 152,039
Int. Cl.³ E04H *17/14*
U.S. Cl. 256—64 **21 Claims**

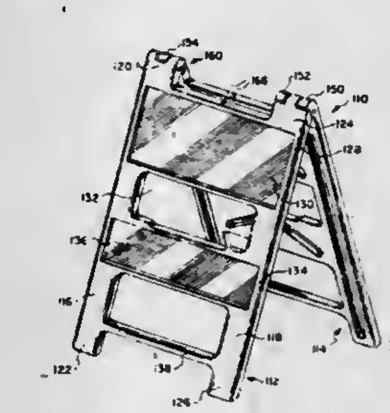

1. A hollow plastic barricade comprising a pair of identical, integral, hollow, hinged-together barricade frame members, each frame member having first and second hinge sections located at respective upper corners thereof with said first hinge section on one frame member cooperating with said second hinge section on the other frame member to form two hinges between said frame members, each frame member comprising two hollow, spaced apart side frame portions with a leg at the bottom of each side portion, an upper hollow panel, a middle hollow panel and a lower hollow sandbag bar, all extending between said side frame portions, said middle panel being spaced beneath said upper panel and said hollow sandbag bar being spaced beneath said middle panel and being spaced above the bottom of said legs a distance which will permit the barricade to be placed over uneven terrain and still be supported by said legs, at least one of said panels being adapted to receive indicia thereon, said first and second hinge sections each including at least one arcuately extending hook-like projection with a bore extending transversely through the sides thereof and with an end surface adapted to engage and bear against a top edge of the other frame member, each frame member having an opening for placing particulate ballast material, such as sand, in said frame member, and said barricade further comprising two pins each of which is received through a pair of adjacent projections extending from respective ones of said frame members.

4,298,187
APPARATUS FOR INLINE DEGASSING AND FILTRATION OF MOLTEN METAL
Jonathan A. Dantzig, New Haven, and Derek E. Tyler, Cheshire, both of Conn., assignors to Swiss Aluminium Ltd., Chippis, Switzerland
Continuation of Ser. No. 900,122, Apr. 26, 1978, Pat. No. 4,159,104. This application Jan. 15, 1979, Ser. No. 3,173
The portion of the term of this patent subsequent to Jun. 26, 1996, has been disclaimed.
Int. Cl.³ C21C *7/00*
U.S. Cl. 266—217 **3 Claims**

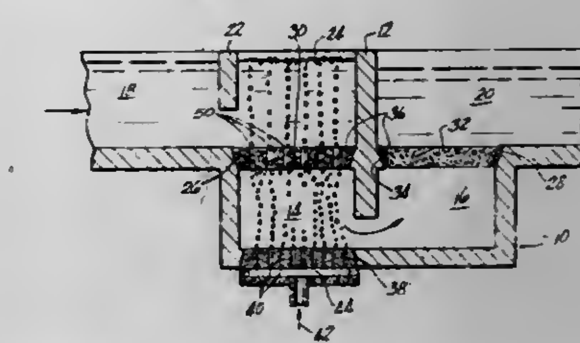

1. An apparatus for the degassing and filtration of molten metal comprising:
chamber means having inlet means, outlet means, and at least one filter plate means;
wall means associated with said chamber means, said wall means being adapted to support said at least one filter plate means; and
fluxing gas inlet means positioned in said chamber means with respect to said at least one filter plate means such that fluxing gas issuing from said fluxing gas inlet means passes through said at least one filter plate means wherein said fluxing gas inlet means comprises a sparger plate being provided with an array of orifices of controlled size and spacing wherein said orifice size is in the range of 0.005″ to 0.050″ and said orifice spacing is in the range of 0.25″ to 5.00″ so as to minimize fluxing gas bubble size while maximizing fluxing gas bubble dispersion thereby optimizing the degassing of said molten metal.

4,298,188
MACHINES FOR COOLING METAL SHEETS OR LIKE PRODUCTS
Alfred Germain, and Georges Bonamour du Tartre, both of Dunkerque, France, assignors to Union Siderurgique du nord et de l'est de la France ("USINOR"), France
Filed Jun. 4, 1980, Ser. No. 156,344
Claims priority, application France, Jun. 13, 1979, 79 15107
Int. Cl.³ B08B *3/04;* **F25D** *13/06*
U.S. Cl. 266—114 **3 Claims**

1. A machine for cooling sheets comprising a lower frame and an upper frame, sets of sheet driving and guiding rolls rotatively mounted in said frames, said frames defining an enclosure which surrounds said rolls and in which enclosure a cooling fluid circulates, a system of fluid discharge conduits connected to the upper frames and a system of fluid discharge conduits connected to the lower frame, the systems having discharge conduits disposed in the vicinity of input and output ends of the machine, a cooling fluid recovery tank, at least the discharge conduits connected to the upper frame and located in the vicinity of the input and output ends of the machine being connected to the cooling fluid recovery tank with interposition of a siphon, a priming device combined with said siphon for creating a depression in said siphon.

4,298,189

APPARATUS FOR THE CONTINUOUS HARDENING OF PUMP CASINGS

Vinzenz Siller, Swartenhorst 3, 2000 Hamburg 71, Fed. Rep. of Germany

Division of Ser. No. 914,968, Jun. 12, 1978, Pat. No. 4,257,831. This application Mar. 26, 1980, Ser. No. 134,118

Int. Cl.^{3} C21D *1/08, 9/08;* **B23K** *7/10*

U.S. Cl. 266—123 **14 Claims**

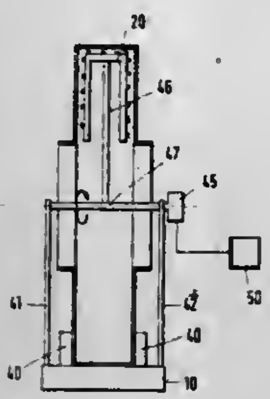

1. An apparatus for the continuous hardening of pump casings which during use have a vertical axis and the casing having an arcuately shaped inner area generally encircling the vertical axis in an eccentric manner, the inner area may have an internal plating and depending on the hardening being effected the core characteristics of the material forming the inner area may be changed, wherein a fixed flame hardening apparatus with a flame hardening burner is arranged in the inner area of the pump casing, a supporting disc arranged horizontally in a machine frame, said disc rotatable by one drive mechanism and which can be swivelled about the horizontal by means of a further drive mechanism and retaining devices arranged on said supporting disc for receiving the pump casing.

14. An apparatus for the continuous hardening of pump casings which during use have a vertical axis and the casing having an arcuately shaped inner area generally encircling the vertical axis in an eccentric manner, the inner area may have an internal plating and depending on the hardening being effected the core characteristics of the material forming the inner area may be changed, wherein a machine frame with support means for maintaining the pump casing in the vertical position, two vertical arm-like bearing supports spaced from one another on either side of the pump casing, a drivable shaft means mounted in said bearing supports, said drivable shaft means having a swivel arm fixed to it at its free end carrying the flame hardening apparatus with a flame hardening burner.

4,298,190

APPARATUS FOR GASEOUS REDUCTION OF METAL ORES WITH COOLING LOOP

Patrick W. MacKay, Monterrey, Mexico, assignor to Fierro Esponja, S.A., Monterrey, Mexico

Continuation of Ser. No. 833,695, Sep. 15, 1977, abandoned, which is a division of Ser. No. 635,655, Nov. 26, 1975, Pat. No. 4,067,728, which is a continuation of Ser. No. 516,095, Oct. 18, 1974, abandoned. This application Feb. 5, 1979, Ser. No. 9,684

Int. Cl.^{3} C21B *13/02*

U.S. Cl. 266—156 **8 Claims**

1. In apparatus for the batchwise gaseous reduction of iron ore to sponge iron in a multiple reactor system of the type which comprises a plurality of reactors including a cooling reactor and a series of reduction reactors in which separate bodies of iron-bearing material are simultaneously treated, a source of reducing gas composed largely of carbon monoxide and hydrogen, a cooling gas loop including said cooling reactor, a pump for circulating cooling gas through said loop and a cooler for cooling the circulating gas, a first conduit interconnecting said source to said loop and a second conduit connecting said loop to the inlet of the first reduction reactor of said series, the improvement which comprises a third conduit directly interconnecting said first and second conduits outside

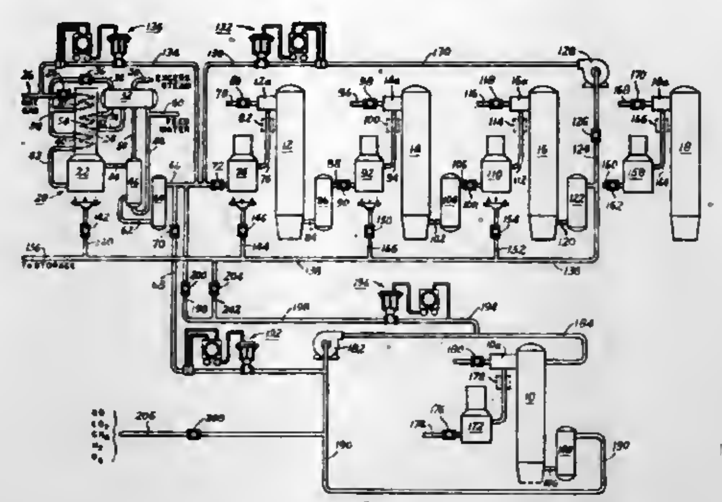

said loop to by-pass said loop and minimize the pressure drop between said source and said first reduction reactor.

4,298,191

MOBILE APPARATUS FOR CONTAINING MOLTEN METAL

Donald A. Atkinson, and Colin F. McCulloch, both of Stockton-on-Tees, England, assignors to Davy McKee (Minerals & Metals) Limited, Stockton-on-Tees, England

Filed Jan. 21, 1980, Ser. No. 113,699

Claims priority, application United Kingdom, Jan. 19, 1979, 02031/79

Int. Cl.^{3} C21B *3/10*

U.S. Cl. 266—165 **6 Claims**

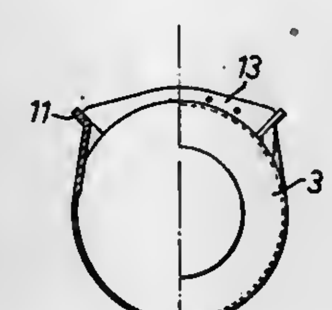

1. Mobile apparatus for transporting molten metal, comprising:

an elongate vessel rotatably supported at its ends on a pair of bogie assemblies;

opening means defined within a wall portion of said vessel for permitting personnel access to the interior of said vessel;

flange means fixedly secured upon said vessel within the vicinity of said opening; and

lid means removably secured to said flange means for partially covering said opening means and thereby defining a spout means for loading and discharging of said molten metal into and out of said vessel when said lid means is disposed upon said vessel, yet permitting access to said interior of said vessel by said personnel through said opening means when said lid means is removed from said vessel.

4,298,192

METHOD OF INTRODUCING POWDERED REAGENTS INTO MOLTEN METALS AND APPARATUS FOR EFFECTING SAME

Dzhondo F. Barbakadze, ulitsa Gldanskaya, 6, kv. 35, Tbilisi; Mamuka S. Mindeli, ulitsa Pionerskaya, 8, Rustavi; Petr G. Macharashvili, ulitsa Lenina, 27, kv. 8, Rustavi; Vazha V. Rusidze, prospekt Druzhby Narodov, 57, kv. 64, Rustavi, and Otari N. Suladze, Pionersky proezd, 3, Rustavi, all of U.S.S.R.

Division of Ser. No. 909,990, May 26, 1978. This application May 2, 1980, Ser. No. 146,374

Int. Cl.^{3} C21C *5/48*

U.S. Cl. 266—218 **4 Claims**

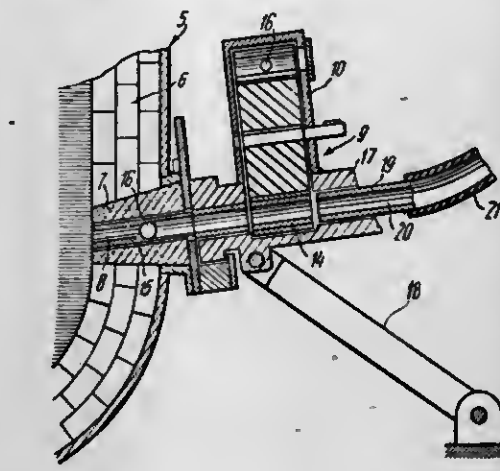

1. An apparatus for carrying out the method of introducing powdered reagents into a molten metal, comprising: a metallurgical vessel containing a molten metal; a tuyere built into the refractory lining of said vessel; a tube provided with a plug and mounted inside said tuyere for axial movement of said tube and said plug therealong and through which tube a powdered reagent is fed into said vessel in a stream of carrier gas, said tube made up of separate sections placed end-to-end, each section being smaller in length than the thickness of said refractory lining of the vessel; a feed device provided with an actuator and mounted on the outside of said tuyere; a hollow cylinder of said feed device, mounted on said actuator, said actuator being operable to ensure butt-end connection of said hollow cylinder with said tuyere; a pusher mounted within said hollow cylinder at the side of the butt end thereof opposite to the butt end facing the tuyere; a feeder of said feed device, formed with at least two compartments of which one compartment accommodates said tube sections and the other one said plugs, said feeder being positioned approximately in the middle portion of the hollow cylinder; the interiors of said hollow cylinder and said feeder communicating with each other and thereby providing for alternate feeding of said tube sections and plugs from the interior of said feeder to the interior of said hollow cylinder and for their further transfer by means of said pusher into said tuyere.

4,298,193

UPPER MOUNTING UNIT FOR MACPHERSON STRUT ASSEMBLY

Jack W. Mourray, West Bloomfield, Mich., assignor to Ford Motor Company, Dearborn, Mich.

Filed Oct. 10, 1979, Ser. No. 83,483

Int. Cl.^{3} B60G *11/38*

U.S. Cl. 267—63 R **17 Claims**

1. A mounting unit for the upper end of a MacPherson strut comprising;

a substantially horizontal mounting plate with a central aperture therethrough;

a first elastomeric isolator abutting a lower side of the mounting plate about said aperture and secured to said plate;

a second elastomeric isolator juxtaposed below said first isolator;

a third elastomeric isolator abutting an upper side of the mounting plate about said aperture and secured to said mounting plate;

said second elastomeric isolator having a different compression rate than said first isolator;

said mounting plate rigidly mountable to a motor vehicle

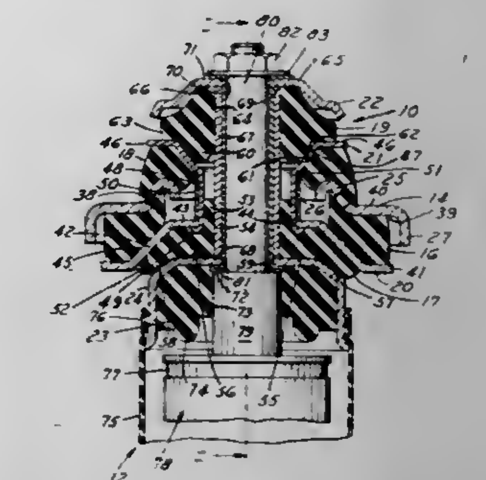

and said isolators aligned such that a passage is formed through said mounting unit to provide an outer end of a piston rod to extend therethrough and be mounted thereto such that upon jounce of a bumper, an upper end of a cylinder of a MacPherson strut becomes juxtaposed with said second isolator to compress one of said first and second isolators and then compress said other of said first and second isolators and upon rebound, a compressive force is applied to said third isolator.

4,298,194

GAS SPRING WITH IMPROVED TERMINAL CONNECTOR AND MOUNTING MEANS

Thomas O. Marx, Rockton, Ill., assignor to Atwood Vacuum Machine Company, Rockton, Ill.

Filed Apr. 7, 1980, Ser. No. 137,746

Int. Cl.^{3} F16F *9/32*

U.S. Cl. 267—64.11 **13 Claims**

1. An electrically conductive gas spring assembly comprising a fluid containing cylinder having closure means at one end thereof, a piston disposed for sliding reciprocating movement within said cylinder, an elongated plunger rod connected to

said piston and projecting out the other end of said cylinder for reciprocating movement with said piston, sealing means in said other cylinder end for supporting said plunger rod for sliding reciprocating movement, a terminal pin extending outwardly from said closure means at said one cylinder end, a terminal pin at an outer projecting end of said rod, conductive means electrically connecting said terminal pins through said cylinder and rod, mounting means at said one cylinder end and at said projecting rod end for use in mounting said gas spring between said cylinder end and projecting rod end, a terminal connector mounted on each said terminal pin and having a lead connecting portion, said terminal connectors each having integrally formed means tightly engaging the outer periphery of a respective terminal pin in electrical conducting relation for completing an electrical path between the lead connecting portions of said terminal connectors.

4,298,195
QUICK SET HYDRAULICALLY ACTUATED CLAMPING TABLE
Thomas F. McDougal, 1415 Beech La., Fairmont, W. Va. 26554
Filed Jun. 12, 1980, Ser. No. 158,823
Int. Cl.³ B23B *31/16*
U.S. Cl. 269—32 22 Claims

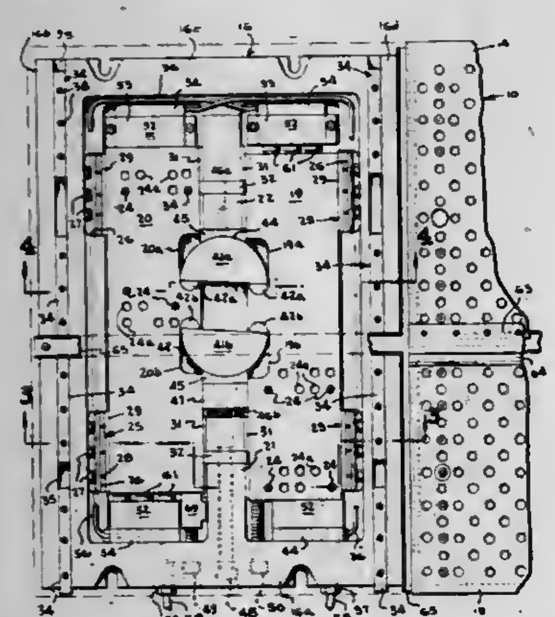

1. A quick set hydraulically actuated clamping table assembly, comprising a rigid base structure, at least one pair of companion flat platens supported closely adjacent each other in a common horizontal plane on said base for movement toward and away from each other having apertures for variably fixing jaw pieces thereon for holding workpieces thereon of various shapes, interfitting guide means on said platens and base confining relative movement of the platens to rectilinear approaching and withdrawing strokes along a reference axis, a pair of laterally adjacent elongated slide plates beneath said platens fixed respectively to an associated platen movable reciprocatively in sliding guided contact with the base parallel to said axis and having shaped cam follower recesses in adjacent confronting edges of the slide plates, a pair of semi-cylindrical bearing segment members located between said slide plates each having a flat diametric face and a convex face and having corner convex portions adjoining the diametric face located in a pair of the cam follower recesses of said slide plates, a pair of shaped bearings abutting the flat diametric faces of said segment members and working in said cam follower recesses, and resiliently biased concave face bearing blocks spaced in a direction paralleling said axis between said slide plate providing bearing faces against which the convex faces of said segment members work providing a centralizing mechanism correlating movement of the slide plates to equal and opposite movement, and hydraulic piston devices at the opposite ends of each of said slide plates interconnected to oppositely move said slide plates parallel to said axis in directions to carry the platens through said approaching and withdrawing strokes to clamp and release the workpiece.

4,298,196
ROCKING TOY
Elizabeth J. Silver, 12172 Vivacite Walk, St. Louis, Mo. 63141
Filed May 10, 1979, Ser. No. 37,865
Int. Cl.³ A63G *17/00*
U.S. Cl. 272—52 6 Claims

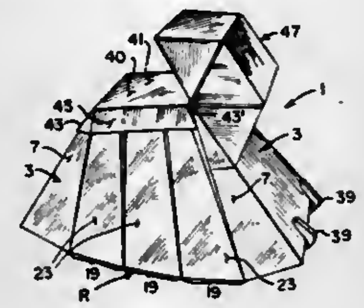

1. A toy comprising a plurality of three-dimensional modules interconnected together, each of said modules being formed by folding flat, substantially rigid sheet-like material along prescored lines, said toy including a plurality of main body modules including a pair of end body modules and at least one intermediate body module between the end body modules, each of said body modules having a pair of generally tubular legs arranged in back-to-back relation with the innermost leg of said end body modules having an opening therethrough and with each of the legs of said intermediate body modules having a respective opening therethrough, a plurality of generally U-shaped top connecting modules each having a pair of legs, said legs of said top connecting modules being insertable into adjacent openings of adjacent body modules, a plurality of bottom connecting modules each having a pair of legs and a web interconnecting the legs, said legs of said bottom connecting modules being insertable into adjacent respective openings of adjacent body modules, and a plurality of side connecting modules each having a main panel insertable between the legs of one of the body modules, said side connecting modules each having side panels overlying the side of the leg of said one body module and of an adjacent leg of a next adjacent body module, and each side panel having a pair of end panels receivable between the legs of said next adjacent body module, said webs of said bottom connecting members forming a bottom surface, said modules when so assembled being securely interlocked with one another so as to form a substantially rigid toy capable of supporting a child sitting on the tops of said body modules to simulate riding.

4,298,197
BALANCE ASSIST FOR ROTATING RECREATIONAL DEVICES
Rodger H. Flagg, 1415 Lynn Ave., Fort Wayne, Ind. 46805
Filed Jan. 29, 1979, Ser. No. 7,399
Int. Cl.³ A63B *19/02*
U.S. Cl. 272—115 16 Claims

1. A removable apparatus to assist the balance of a user within a rotatable self-propelled recreational device having a pair of parallel coaxial rings supported in axially spaced relation to one another comprising:

a hub adapted to be positioned centrally at the axis of one of said rings;

gripping means being freely rotatably mounted to said hub; said gripping means being adapted for manual grasping by a user positioned between said rings to provide balance during propelling of the device, as the ring is being rotated about its axis;

a plurality of elongated members, each member being attached at one of its ends to said hub;

attaching means for removable attaching each of the other ends of each of said members to said rings in member

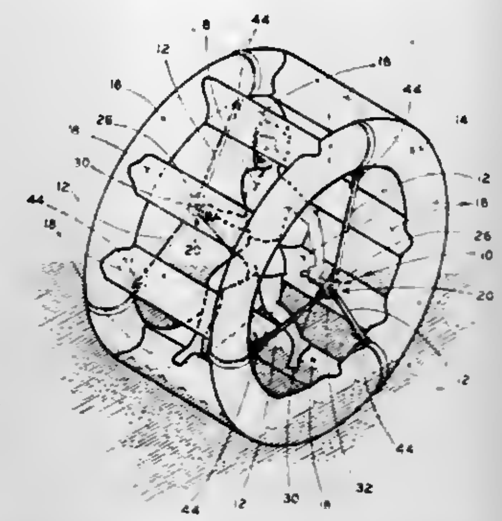

tensioned condition to position and tensionally support said hub centrally of said one ring.

4,298,198
ELECTRONIC GAME APPARATUS FOR A SINGLE PLAYER OR OPPOSING PLAYERS
Thomas L. Huang, 7024 Burnside Dr., San Jose, Calif. 95120, and Ling Ling-Huang, 29 Scenic Dr., Poughkeepsie, N.Y. 12603
Filed Apr. 23, 1979, Ser. No. 32,383
Int. Cl.³ A63F *9/00*
U.S. Cl. 273—1 GC 32 Claims

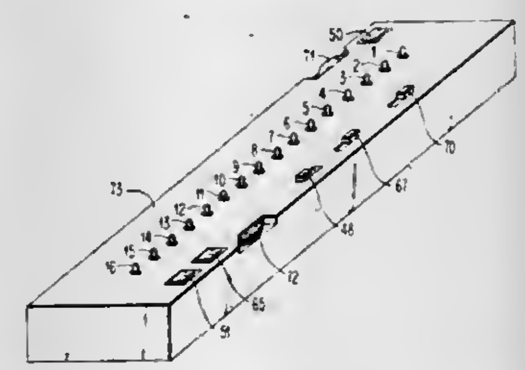

1. In a game apparatus, the combination comprising:

a plurality of selectively energizable light sources disposed for view by opposing players;

circuit means for controlling the energization of said light sources and having four states of operation, said circuit means being operative in first and second states to energize predetermined ones of said series of light sources to effect the appearance to the players of stationary lights, said circuit means being operative in third and fourth states to progressively energize said light sources in different directions between adjacent lights to effect the appearance to the players of a moving light;

means responsive to one of said predetermined light sources being energized to switch said circuit means into one of said first and second states;

and first and second player-actuated switches each adapted to be controlled by different players to switch said circuit means between said third and fourth states so long as none of said predetermined light sources is energized, whereby each player may attempt to reverse the direction of the progression of energization of said light sources before such progression energizes a predetermined light source.

4,298,199
GAME
Steven C. Bush, Feasterville, and Robert E. Smathers, Glassboro, both of N.J., assignors to Product Dynamics, Ltd., Levittown, Pa.
Filed Jun. 20, 1979, Ser. No. 50,373
Int. Cl.³ A63F *9/00*
U.S. Cl. 273—1 GD 15 Claims

13. A game comprising:
(a) a base;
(b) a plurality of trap elements pivotally mounted on the base, said elements being formed in the simulation of the petals of a flower and being arranged in a generally annular pattern about a substantially circular playing area, said elements being swingable between retracted positions in which they extend upwardly from the base and leave the playing area uncovered, whereby said flower appears as though in full bloom, said elements being swingable to advanced, closed positions in which they converge upwardly to cover said playing area and offer the appearance of a flower the bloom of which has closed;
(c) resilient yielding means tensioned to bias the trap elements to said advanced positions thereof;
(d) an upstanding trigger member mounted for up-and-down movement centrally within the playing area and formed in the simulation of a pistil;
(e) a series of links connected between the trigger member and the several trap elements, said links being movable past dead center in one direction in respect to the resilient yielding means when the trigger member is shifted downwardly to releasably latch the trap elements in their retracted positions, said links when the trigger member is shifted upwardly being adapted to move past dead center in the opposite direction so as to release the force of the resilient yielding means for biasing of the trap elements thereby to their advanced positions;
(f) a game piece formed in the simulation of an insect and adapted to be suspended within the playing area by a player, said game piece and said trigger member including means adapted to shift the trigger member upwardly if the game piece moves into close proximity to the trigger member and is pulled upwardly by the player, whereby to cause the game piece to be trapped within the playing area by movement of the trap elements to their closed positions; and
(g) a plurality of game counters formed in the simulation of the stamens of said flower and removably supported in the playing area about the pistil, said game piece and counters having interengageable means whereby to permit removal of the counters individually, by withdrawal of the game piece from the playing area while keeping the same out of close proximity to the trigger member.

4,298,200
TANGRAM GAME ASSEMBLY
Maurice S. Kanbar, 4 E. 77th St., New York, N.Y. 10021
Filed May 21, 1980, Ser. No. 151,836
Int. Cl.³ A63F *9/10*
U.S. Cl. 273—157 R **8 Claims**

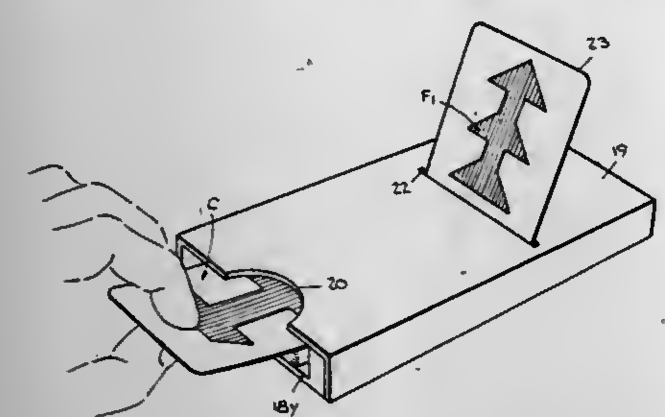

1. A Tangram puzzle game assembly comprising:
A two sets of Tangram pieces each derived from a large square;
B a deck of cards each having printed thereon a Tangram puzzle figure and a solution thereto; and
C a box including a case divided into two compartments, the first housing said two sets of pieces and the second housing said cards, said box including means to support a selected card in an upright position at which it can be observed by players.

4,298,201
GOLF ALIGNMENT DEVICE
Bernard Palinkas, 1017 Brunswick Pike, Lawrenceville, N.J. 08648
Filed Dec. 4, 1980, Ser. No. 213,139
Int. Cl.³ A63B *69/36*
U.S. Cl. 273—183 B **9 Claims**

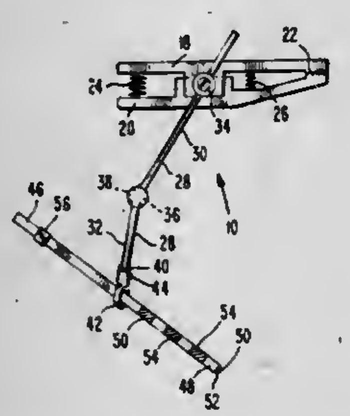

1. A golf alignment device, for use by a golfer for correct placement of his golf club and body with respect to a golf ball upon execution of a golf swing, comprising:
(a) a retaining means being attachable with respect to the body of a golfer;
(b) a linkage means attached to said retaining means having at least a portion thereof being movable with respect to said retaining means;
(c) an attachment means connected to said retaining means and said linkage means for attachment therebetween;
(d) a securement means being secured to said linkage means;
(e) a bar member being secured to said securement means to be movably attached with respect to said linkage means, said bar member extending longitudinally and including at least a first side and a second side being of different colorations to facilitate viewing against backgrounds of different color shades, said bar member being rotatably movable about the longitudinally extending axis thereof with respect to said linkage means to selectively orient one of said first and second sides in the upwardly facing direction, said bar member further including a plurality of graduation markings extending thereabound to facilitate judgement of distance; and
(f) a collar means extending laterally around said bar member to facilitate orientation of a golf ball with respect to the body of a golfer, said color means being longitudinally movable with respect to said bar member to vary the orientation for different types of golf club strokes.

4,298,202
BOARD GAME USING MOVABLE TRANSPARENT OVERLAY
Gilbert L. Singer, Rte. 4, Box 223a, Idaho Falls, Id. 83401
Filed Oct. 26, 1979, Ser. No. 88,390
Int. Cl.³ A63F *3/00*
U.S. Cl. 273—247 **2 Claims**

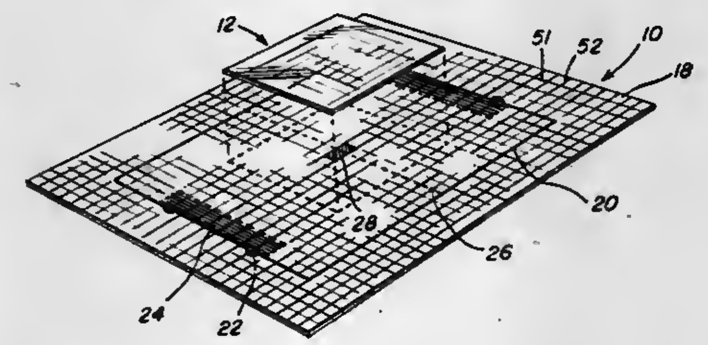

1. A board game device for simulating the play of a ball game comprising a gameboard having a generally planar top surface, a plurality of discs simulative of balls used in a game, said top surface including indicia designating a boundary line defining a rectangular area with the area enclosed by the boundary line including grid division lines defining target areas for locating a ball simulating disc used in playing a game, chance control means for indicating the final location of a disc in relation to the target position of a disc, and a transparent overlay positionable on the gameboard to indicate the final position of the disc in relation to the target position thereof as determined by the chance control means, said chance control means including a spinner comprising a base panel having a plurality of concentric spaced circles thereon divided into circumferential segments by radial division lines and a rotatable pointer journaled for rotation at the center of the concentric circles, certain of said segments defined by the concentric circles and radial division lines including ordinate numbers to indicate the coordinates of the relationship of the final position of the ball simulating disc to the target position thereof, said overlay including a grid thereon with ordinate numbers in certain areas corresponding to the ordinate numbers on the spinner to indicate the final position of the ball simulating disc, the ordinate numbers in the segments of the spinner increasing in numerical value from the inner circles toward the outer circles thereby increasing the distance between the target area and final position of a disc in accordance with the difficulty of the movement of the disc from an initial position toward a target area, said boundary line on the gameboard enclosing an area simulative of a soccer field and provided with goal posts at each end thereof and a goalie area inwardly of the boundary line adjacent the goal posts, a transverse centerline between the ends of the enclosed area, a kick-off square designated at the center of the enclosed area on both sides of the centerline to indicate a kick-off area for each team with the grid division lines enabling positioning of a disc thereon, certain of said discs being plain, some being provided with indicia to designate star players and a goalie with the discs being capable of movement in different manners on the top surface of the gameboard commensurate with their status.

4,298,203
TWO PART SHAFT SEALING RING
Helmut Hölzer, and Ernst M. von Arndt, both of Weinheim, Fed. Rep. of Germany, assignors to Firma Carl Freudenberg, Weinheim, Fed. Rep. of Germany
Filed Nov. 18, 1980, Ser. No. 208,037
Claims priority, application Fed. Rep. of Germany, Dec. 12, 1979, 2949838
Int. Cl.³ F16J *15/32*
U.S. Cl. 277—152 **21 Claims**

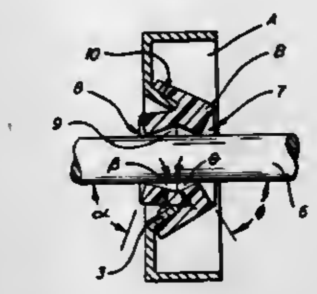

1. A two part shaft sealing ring, which comprises:
an outer stiffening ring having a circular projection as the inside diameter surface, and
an elastically resilient, inner lip ring with front and back end faces and an inside diameter matching the outside diameter of the shaft to be sealed and having a concentric, circular slot in the back end face;
the profile of the circular slot matching the profile of the projection;
the mean diameter of the slot being smaller than the mean diameter of the projection;
the ratio of the depth of the slot to the length of the inside diameter wall of the lip ring being at most 0.6, and
the stiffening ring and lip ring being concentrically mated with the projection fitting into the slot.

4,298,204
SEAL
Danny R. Jinkins, Bel Air, Md., assignor to Black & Decker Inc., Newark, Del.
Filed Jan. 21, 1980, Ser. No. 113,802
Int. Cl.³ F16J *15/16*
U.S. Cl. 277—165 **5 Claims**

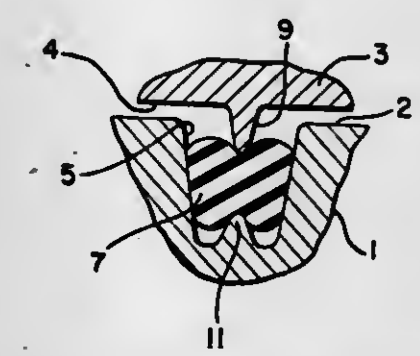

1. A seal for sealing a two-member joint comprising:
(a) a first planar surface on one of the members,
(b) a second planar surface on the other of the members disposed adjacent to and normally spaced from the first planar surface,
(c) a channel formed in one of the members in the planar surface thereof, the side walls of the channel being integral with the member and the surface, said side walls sloping outwardly such that the width of the base of the channel is narrower than the width of the opening of the channel,
(d) a projection formed in alignment with and projecting within the channel on the adjacent planar surface, and
(e) gasket means disposed in the channel and engaged by the projection to seal the joint at the first and second planar surfaces of the two respective members, wherein the width of the base of the channel is narrower than the width of the gasket means and the width of the opening of the channel is greater than the width of the gasket means.

4,298,205
SEALING ELEMENT
Ingemar K. Ostling, Ronninge, Sweden, assignor to Sandvik Aktiebolag, Sandviken, Sweden
Continuation of Ser. No. 878,896, Feb. 17, 1978, abandoned. This application Oct. 17, 1979, Ser. No. 85,761
Claims priority, application Sweden, Feb. 17, 1977, 7701745
Int. Cl.³ F16J *15/34*
U.S. Cl. 277—197 **14 Claims**

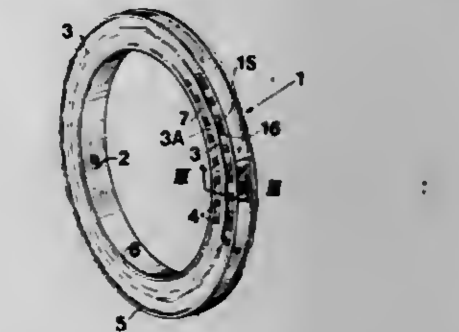

1. A sealing element comprising a holder including radially spaced annular surfaces defining an axially open slot therebetween, a sealing ring comprising a plurality of plates which are axially insertable into said slot and connected to said holder to form a unit therewith, said plates including annular inner and outer walls engaging said radially spaced surfaces of said holder, said plates being more than two in number, a rod mounted on each of said plates so as to project axially therefrom, said rods being formed of cemented carbide, each rod extending the full length of its associated plate so that with said plates arranged in end-to-end relationship in said slot, said rods are arranged in end-to-end relationship to form a continuous axially facing annular contact surface the diameter of which is greater than 300 mm, said plates being retained in said slot by means of a shrinkage fit with said holder.

4,298,206
FLEXIBLE PACKING FOR SEALING PIPELINE JOINTS
Noriatsu Kojima, 31, Yanagishima-cho 5-chome, Nakagawa-ku Nagoya-shi, Japan
Filed Apr. 21, 1975, Ser. No. 569,699
Claims priority, application Japan, Apr. 21, 1974, 49-044674
Int. Cl.³ F16J *15/14*
U.S. Cl. 277—205 **28 Claims**

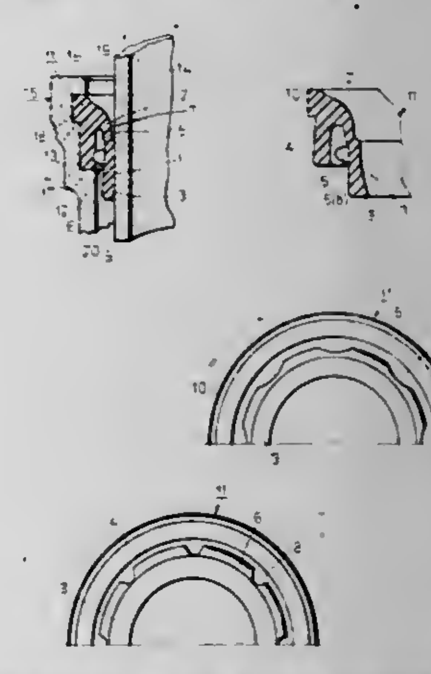

1. A packing member of flexible elastic material, a pipe joint

member, said pipe joint member having means defining an inner peripheral configuration which includes portions generally transverse to the longitudinal axis thereof to seal a joint in a pipeline, and a pipeline having an axis and a non-grooved outer cylindrical surface, said packing member when assembled with said pipe joint member and said pipeline comprising:

inner peripheral means for sealingly engaging a portion of said pipeline by virtue of its elasticity and having a plain cylindrical inner surface;

outer peripheral means for sealingly engaging said pipe joint member, said means being relatively thick and having a configuration of shape and size complementary to that of said pipe joint member whereby to be securely held thereby against axial movement relative thereto, said outer peripheral means being spaced from said inner peripheral means; and

a generally annular intermediate portion connecting said inner and outer peripheral sealing means integrally with each other, said intermediate portion being relatively small in thickness as compared with said outer peripheral sealing means and being generally inclined relative to the axis of the pipeline from said outer peripheral sealing means to said inner peripheral sealing means to define an outwardly diverging annular clearance between said packing member and said portion of said pipeline, said pipe joint member defining an annular clearance which encircles said portion of said pipeline and which communicates with said outwardly diverging clearance, said intermediate portion being flexible and being tapered in thickness from the said outer means to the said inner means by being thinner at the said inner means than at the said outer means, whereby relative axial movement between said pipeline and pipe joint member will result in flexing and/or stretching of said intermediate portion prior to disturbance of the engagement to said outer peripheral means with said pipe joint member.

4,298,207
RESILIENT GASKET MATERIAL
Chester S. Hopper, Newtown, and Edward M. Case, Weston, both of Conn., assignors to The Marlo Company, Inc., Newtown, Conn.
Filed Aug. 29, 1980, Ser. No. 182,528
Int. Cl.³ F16J *15/22*
U.S. Cl. 277—230 **21 Claims**

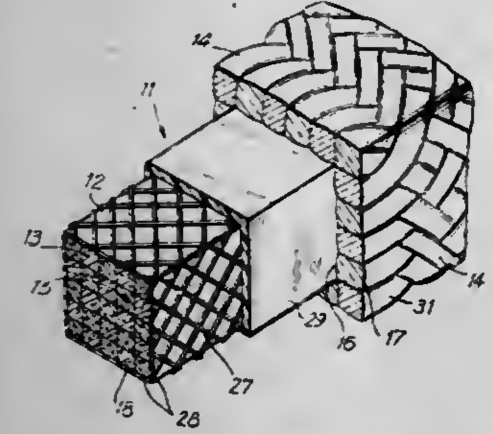

1. A chemically resistant, resilient gasket material, said gasket material having opposed surfaces for forming a seal between a rim and a cover for said rim, said gasket material having a cross-section comprising:

a core of glass fibers disposed at an angle to said surfaces for providing resilience to said material; and

a jacket of a fiber selected from the group consisting of glass fiber, carbon fiber, graphite fiber, polytetrafluoroethylene (TFE) fiber, polymonochlorotrifluoroethylene (PMC) fiber and aramid fiber and dispersed TFE within said jacket in sufficient quantity to prevent the flow of liquid therethrough, said jacket being disposed about said core.

4,298,208
SPRING ACTUATED CHUCK
Milton L. Benjamin, and Wilbur N. Miles, both of Chagrin Falls, Ohio, assignors to Erickson Tool Company, Solon, Ohio
Filed Jan. 31, 1980, Ser. No. 117,348
Int. Cl.³ B23B *31/06, 31/44;* B23C *5/26*
U.S. Cl. 279—91 **18 Claims**

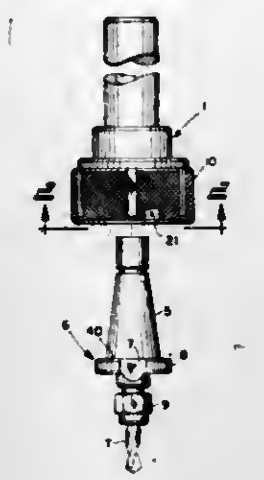

1. In a chuck of the type wherein a holder has a tapered socket to receive the tapered shank of a flanged tool adapter and a pair of diametrically opposite keys to axially interfit in the slots in the flange of said adapter, the combination therewith of a nut having threaded engagement with said holder; a clamping ring angularly adjustably keyed and axially retained in said nut having a pair of radially inwardly extending clamping lugs to engage the axially outer face of said adapter flange to urge said shank into mating engagement with said socket upon rotation of said nut and ring in one direction from an unclamping position whereat said lugs are aligned with said keys; and an ejector rotatably and axially fixedly supported in said nut having a tubular portion surrounding said adapter flange and extending axially inward from said ring, said ejector having a radially inwardly extending ejector flange which is slotted to non-rotatably and axially slidably embrace said keys and which is engageable with the axially inner face of said adapter flange to disengage said shank from said socket during rotation of said nut and ring in the opposite direction to said unclamping position.

4,298,209
DETACHABLE ROLLER SKATE WITH REAR BRAKE
John Peters, 4637 Twentyfifth St., San Francisco, Calif. 94114
Filed Jul. 23, 1979, Ser. No. 59,526
Int. Cl.³ A63C *17/14*
U.S. Cl. 280—11.2 **11 Claims**

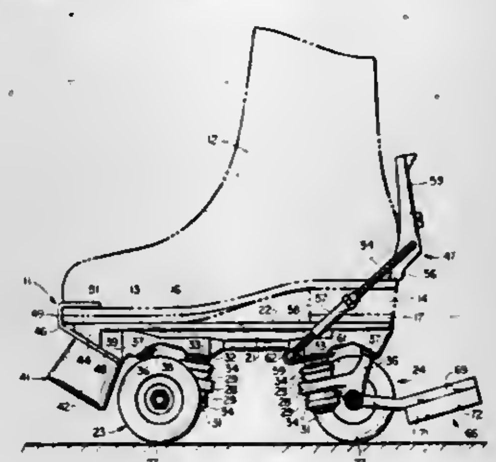

1. In a roller skate: a horizontally extending base having an upper surface for receiving the bottom portion of a shoe, wheel trucks mounted on vertically extending posts toward the front and rear of the base, a toe stop projecting downwardly from the base in front of the front truck, a toe clip secured between

the toe stop and the base and extending upwardly about the base for engagement with the front portion of the shoe to limit forward and lateral movement of the shoe on the base, a mounting bracket having a flange affixed to the mounting post of the rear truck and a ferrule extending laterally of the base in front of the rear truck, and a releasable binding pivotally mounted in the mounting bracket ferrule and engageable with the rear portion of the shoe for cooperation with the toe clip to secure the skate to the shoe.

4,298,210
DEVICE ALLOWING A SAFETY CONNECTION BETWEEN THE PEDAL OF A BICYCLE AND THE SHOE WORN BY THE CYCLIST
Jacques Lotteau, 22, rue de Breteuil, 78670 - Villennes sur Seine; Jacques Bruker, 13, rue Boileau, 75016 - Paris, and Charles Freche, 9, rue Villebois-Mareuil, 75017 - Paris, all of France
Filed Feb. 21, 1980, Ser. No. 123,161
Claims priority, application France, Feb. 21, 1979, 79 04413
Int. Cl.³ B62M *1/02*
U.S. Cl. 280—259 **6 Claims**

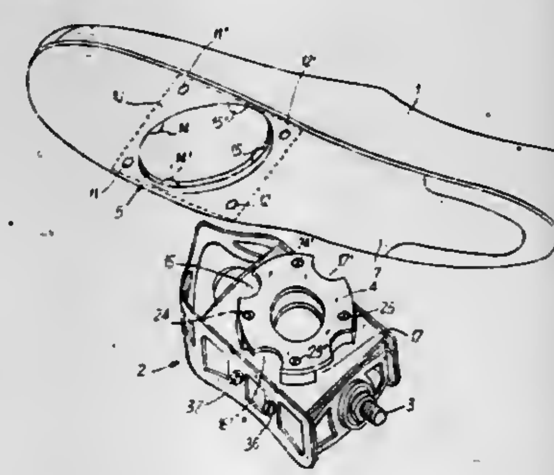

1. A device for providing a positive pushing or pulling connection between a bicycle pedal and the shoe worn by the cyclist, said device comprising

a cylindrical block

a plate for supporting said cylindrical block with its cylindrical surface and one end surface exposed

means for removably connecting said support plate to the pedal

an open ended cylindrical housing adapted to axially receive said cylindrical block, said housing being disposed in the thickness of the sole of the cyclist's shoe,

radially inwardly extending lugs fast with the internal wall of said housing

circumferentially arranged recesses provided on the exposed surfaces of said block and adapted to axially receive said lugs, said recesses being L shaped in radial cross section to provide a bayonet type locking engagement when the lugs are angularly displaced after being axially received.

4,298,211
LOCK FOR A STAND OF A TWO-WHEELED VEHICLE
Mamoru Shitamori, Kobe, Japan, assignor to Kawasaki Jukogyo Kabushiki Kaisha, Kobe, Japan
Filed Aug. 3, 1979, Ser. No. 63,203
Claims priority, application Japan, Aug. 10, 1978, 53-109862[U]
Int. Cl.³ B62H *5/00*
U.S. Cl. 280—297 **2 Claims**

1. In a motorcycle vehicle including a frame, wheels mounted adjacent the ends of the frame and engine parts mounted on the frame and between the wheels, the improvement comprising a locking mechanism to prevent theft of the vehicle, at least one pivot shaft secured to a lower portion of the frame between the wheels, a sleeve pivotally mounted on said shaft, said pivot shaft and said sleeve being mounted and enclosed within said frame and engine parts, whereby said pivot shaft and said sleeve are protected by said frame and said engine parts against access and tampering, a stand secured to said sleeve, the stand being pivotable between an upright position and a retracted position and said sleeve moving during such pivotal movement around the pivot shaft, said sleeve thus being supported by said pivot shaft and said stand being supported by said sleeve, said locking mechanism comprising a recess formed in said sleeve, and pin means mounted on said

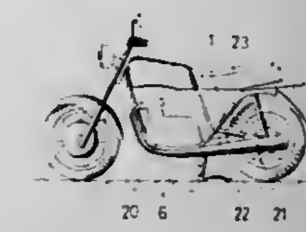

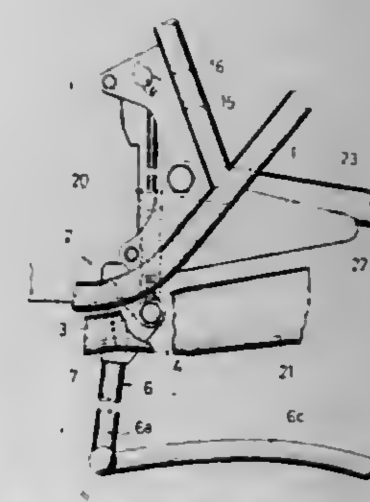

frame adjacent said recess and movable between an engaged position and a disengaged position, said recess and said pin means also being mounted and enclosed within said frame and engine parts, said pin means when in said engaged position extending into said recess when said stand is in said upright position and preventing said pivotal movement to said retracted position, and said pin means when in said disengaged position being displaced from said recess and permitting pivotal movement to said retracted position.

4,298,212
HITCH PIN
Merle A. Jamison, Rte. 2, Box 211, Salem, Va. 24153
Filed Nov. 27, 1979, Ser. No. 98,375
Int. Cl.³ B60D *1/02*
U.S. Cl. 280—515 **10 Claims**

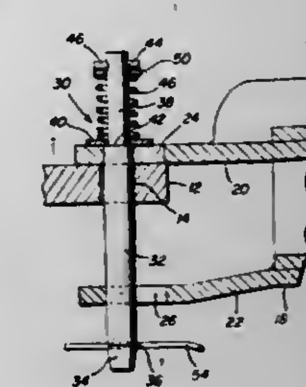

1. In combination with a draft vehicle including a first rearwardly projecting supported tow bar portion defining a first upstanding opening extending therethrough and a towed apparatus including a second forwardly projecting tow bar portion horizontally lapped over and supported from said first tow bar portion and defining a second upstanding opening extending therethrough registered with said first opening, an upstanding hitch pin freely passed through said openings coupling said first and second tow bar portions together, said hitch pin including an upper end portion projecting above said second tow

bar portion, abutment means mounted on said upper end portion for vertical shifting relative thereto above a lower positive limit position on said upper end portion and opposing and abutted downwardly against said second tow bar portion, and pre-loaded force means connected between said abutment means and hitch pin yieldingly biasing said abutment means against upward movement from said lower limit position.

4,298,213
SKI SAFETY BINDING OF THE DIAGONAL RELEASE TYPE
Ralf Storandt, Leonberg, Fed. Rep. of Germany, assignor to Vereinigte Baubeschlagfabriken Gretsch & Co. GmbH, Leonberg, Fed. Rep. of Germany
Filed Jan. 10, 1979, Ser. No. 2,455
Claims priority, application Fed. Rep. of Germany, Jan. 23, 1978, 2802775; Aug. 16, 1978, 2835732
Int. Cl.^{3} A63C *9/085*
U.S. Cl. 280—628 **39 Claims**

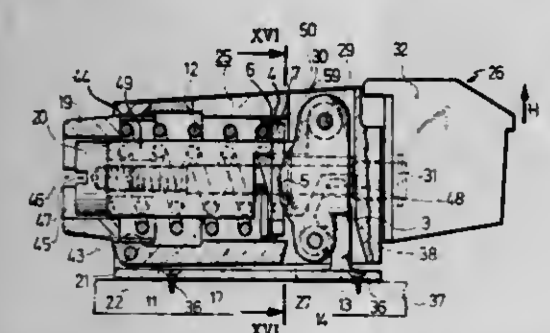

1. A safety binding for a ski comprising: a housing pivotally mounted about a transverse axis, a sole clamp carried by said housing, an upward release mechanism incorporating an adjustable upward release spring and operative to locate the housing and the sole clamp in a closed position and also to release said housing and said sole clamp for upward pivotal movement about said transverse axis once the release setting of said upward release spring is exceeded, a sideways release mechanism incorporating an adjustable sideways release spring one end of which bears against said housing, said sideways release mechanism being operative to locate the sole clamp sideways while allowing the sole clamp to be displaced sideways to either side of said housing once the release setting of the sideways release spring is exceeded, said upward and sideways release springs being coil springs of different diameters and located one within the other, said housing being provided with a transverse wall, said upward release spring being disposed on one side of said wall remote from said sole clamp, said upward release mechanism being located on the other side of said wall adjacent said sole clamp, there being at least one passage through said wall for communicating the force from the upward release spring to the upward release mechanism, the sideways release spring being a compression spring bearing at its one end on said transverse wall and being connected to said sole clamp via an abutment at its other end and a rod passing through the housing and through a further opening in said wall.

4,298,214
VEHICLE SAFETY RESTRAINT DEVICE
Milton F. Brown, Jr., P.O. Box 4570, Virginia Beach, Va. 23454
Filed May 10, 1979, Ser. No. 37,649
Int. Cl.^{3} B60R *21/08*
U.S. Cl. 280—735 **14 Claims**

1. A vehicle safety restraint for protecting occupants of a vehicle comprising

a. a confining means adapted in use for confining the upward and forward movements of an occupant of a vehicle;
b. a container means mounted to the interior overhead of a vehicle for containing said confining means;
c. said confining means including at least one airbag and at least one extending torso and pelvic engaging safety restraint which are released from said container means upon application of extending and expanding forces;
d. a spring biased rotatable transverse tube supporting said container means in a ready position on the interior overhead of a vehicle;
e. a looped locking means for holding said rotatable transverse tube in a static ready condition;
f. a means for removing said looped locking means to release

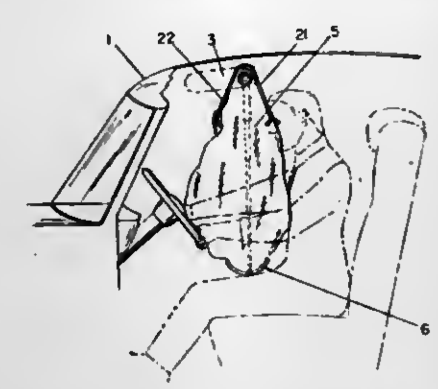

said rotatable transverse tube from a static ready condition to a kinetic condition;
g. an activating means responsive to a selected condition adapted to activate said means for removing said looped locking means;
h. said container means including top and bottom covers which open upon actuation of said air bag and said torso and pelvic engaging restraint by said extending and expanding forces.

4,298,215
CARBONLESS DUPLICATING AND MARKING SYSTEMS
Paul J. Schmidt, Sharonville, and William M. Hung, Cincinnati, both of Ohio, assignors to Sterling Drug Inc., New York, N.Y. Continuation-in-part of Ser. No. 39,017, May 14, 1979, Pat. No. 4,274,660. This application Mar. 31, 1980, Ser. No. 135,855
Int. Cl.^{3} B41M *5/16, 5/18, 5/22*
U.S. Cl. 282—27.5 **2 Claims**

1. A pressure-sensitive carbonless duplicating system or thermal marking system comprising a support sheet coated with a layer containing as a color-forming substance a 1-R^0-2-R$^{4'}$-3-R^1-6-(R)$_2$amino-5'/6'-Y-carbonylfluoran of the formula

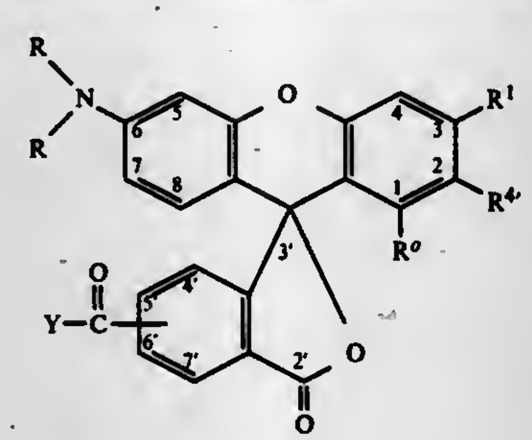

wherein:
R represents a non-tertiary C_1 to C_4 alkyl;
R^0 and R^1 each represent hydrogen or a non-tertiary C_1 to C_4 alkyl;
$R^{4'}$ represents —N(R^5)(R^6) in which
R^5 represents hydrogen, non-tertiary C_1 to C_{18} alkyl, benzyl or benzyl substituted by halo, nitro, non-tertiary C_1 to C_4 alkyl or non-tertiary C_1 to C_4 alkoxy,
$R^{6'}$ represents hydrogen, non-tertiary C_1 to C_{18} alkyl, benzyl or benzyl substituted by halo, nitro, non-tertiary C_1 to C_4 alkyl or non-tertiary C_1 to C_4 alkoxy or acyl, or R^5 and R^6 taken together with the nitrogen represent

2,5-(R^7)$_2$-1-pyrrolyl in which R^7 represents hydrogen or non-tertiary C_1 to C_4 alkyl;
Y represents R^2O in which R^2 represents hydrogen, a non-tertiary C_1 to C_{18} alkyl, benzyl or benzyl substituted by halo, nitro, a non-tertiary C_1 to C_4 alkyl or a non-tertiary C_1 to C_4 alkoxy, alkali metal cation or ammonium cation.

4,298,216
Patent Not Issued For This Number

4,298,217
IDENTITY CARD
Roland Moraw, and Helmut Walter, both of Wiesbaden, Fed. Rep. of Germany, assignors to Hoechst Aktiengesellschaft, Frankfurt am Main, Fed. Rep. of Germany
Filed Aug. 29, 1979, Ser. No. 70,737
Claims priority, application Fed. Rep. of Germany, Sep. 6, 1978, 2838795
Int. Cl.^{3} G09F *3/02;* B42D *15/00*
U.S. Cl. 283—7 **13 Claims**

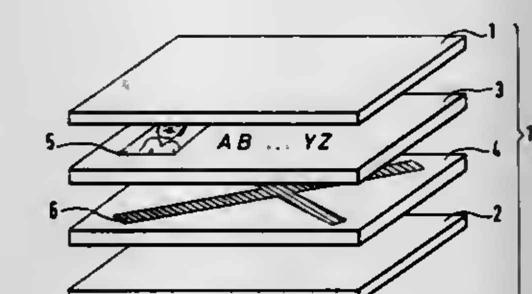

1. An identity card, comprising:
a single monolithic body of a single synthetic resinous material containing at least one element of visible identifying indicia and, in the interior thereof, first and second elements of an optically recognizable security indicia, said first and second elements being spaced apart from each other in the direction of the thickness of said body and being in a fixed spatial relationship with respect to each other, whereby displacement of said first and second elements relative to each other provides an indication of tampering with the identity card, said body having been made by fusing together a first layer of heat plastifiable synthetic resinous material to a first surface of a second layer of the same heat plastifiable synthetic resinous material which contains said first element of security indicia on said first surface thereof, to provide a core comprised of said fused first and second layers, and fusing to at least one outer surface of said core a third layer of the same heat plastifiable synthetic resinous material, wherein said second element of security indicia is located at the interface between said third layer and the outer surface of said core.

4,298,218
LATCHING ASSEMBLY FOR RISER PIPE SPACERS
James A. Britch, Westwego, La., assignor to Standard Oil Company (Indiana), Chicago, Ill.
Filed Aug. 30, 1979, Ser. No. 70,944
Int. Cl.^{3} F16L *35/00*
U.S. Cl. 285—3 **5 Claims**

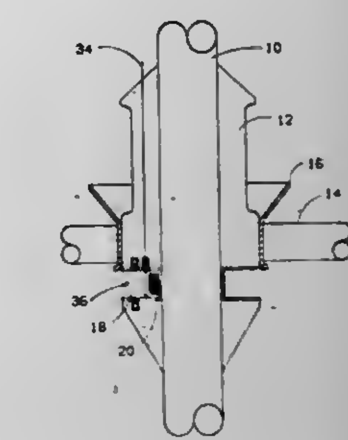

1. A latching means for use with a riser pipe connecting a subsea well and floating structure which comprises:
a donut housing placed about said riser pipe and attached thereto;
at least one hole in said donut housing opening to the exterior thereof and being perpendicular to the axis of the riser pipe about which the donut housing is placed;
a latch pin in said hole and having a latching recess;
a spring in said hole urging said latch pin outwardly away from said riser pipe toward a position wherein the outer end of said latch pin extends beyond said donut housing;
a release pin extending from said donut housing into said latching recess of said latch pin to hold said latch pin in position;
shear pin means limiting the outward movement of said latch pin when said releasing pin is released to hold said latch pin in a fixed position with respect to said donut housing.

4,298,219
QUICK-COUPLING BALL-AND-SOCKET JOINT
Joost Amelink, Spaarndam, Netherlands, assignor to Scheepswerf Stapel B.V., Spaarndam, Netherlands
Filed May 15, 1979, Ser. No. 39,434
Claims priority, application Netherlands, May 18, 1978, 7805407
Int. Cl.^{3} F16L *35/00*
U.S. Cl. 285—24 **1 Claim**

1. A quick-coupling ball-and-socket joint for coupling two rigid pipe lengths comprising: a hollow ball secured to the end of a first pipe length, said ball having a flow passage therethrough communicating at one end with the interior of the first pipe length; an annular coupling body closing around and connecting with the ball, the annular coupling body having an interior surface complementary to and engaging the surface of the ball so as to be omnilaterally pivotable relative thereto, the end portion of said body facing away from the first pipe length

having a conical outer surface and the outer surface of said body axially adjacent the conical surface being cylindrical; the end portion of said body facing toward said first pipe length having a circumferential collar which projects radially outwardly; a sleeve coaxial with and secured to a second pipe length, the diameter of said collar being not less than the diameter of said sleeve and said sleeve having an interior conical surface and an axially adjacent cylindrical surface which are complementary to the conical surface and cylindrical surface on said coupling body, and said sleeve having an open end portion which terminates in an edge facing toward said first pipe length and which has an inner beveled surface so that when the ball and coupling body is being inserted into the

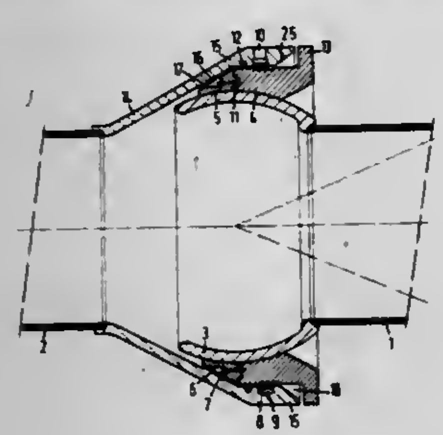

sleeve at an angle thereto said collar engages and coacts with said edge at a first location thereon and said beveled surface engages and coacts with said conical surface on said coupling body to aid in bringing the coupling body into centering relationship with the sleeve; and means for releasably locking the sleeve to the coupling body, said means including an annular circumferential groove in the outer cylindrical surface of the coupling body and an annular circumferential groove in the interior cylindrical surface of the sleeve, said grooves being so disposed that they come to lie opposite each other in the coupling position of the joint, and a circlip in one of the grooves projecting radially from said one groove in a manner such that the circlip is pressed into said one groove and then expands partially into the other groove while remaining partially in said one groove as said grooves come to lie opposite each other during insertion of the coupling body into the sleeve, the outer surface of the sleeve having a recess therein communicating with the respective groove to provide access for a releasing tool to engage the circlip.

4,298,220
PIPE JOINT
Tetsuo Kukuminato, Koshigaya, Japan, assignor to Shoketsu Kinzoku Kogyo Kabushiki Kaisha, Tokyo, Japan
Filed Apr. 20, 1979, Ser. No. 31,922
Claims priority, application Japan, Apr. 29, 1978, 53-58076
Int. Cl.³ F16L *55/00*
U.S. Cl. 285—178 **11 Claims**

1. A pipe joint comprising:
(a) a casing having a pipe receiving portion defining a passage for axially receiving a leading end of a pipe, the casing defining an entrance;
(b) a rigid clamp ring mounted within the casing transversally of the passage, the clamp ring having an inwardly tapered inner peripheral surface facing the entrance and terminating in a sharp inner edge defining an opening in the clamp ring;
(c) the clamp ring having an outer peripheral surface in sliding engagement with a contacting portion on the inner periphery of the pipe receiving portion for guiding the clamp ring between a first position, where the opening is eccentric to the axis of the passage and the tapered inner peripheral surface obstructs the passage, and a second position, where the opening is concentric to the axis of the passage and the tapered inner peripheral surface is removed from the passage,
(d) a spring in the casing urging the clamp ring into its first, eccentric position;
(e) the clamp ring being responsive to insertion of a pipe bend through the casing entrance along the passage and against the tapered inner peripheral surface, to be dis-

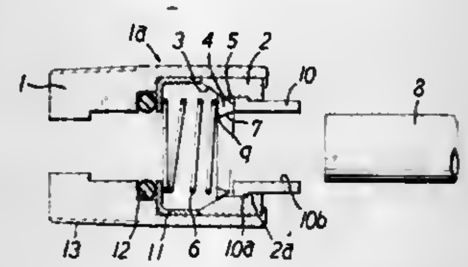

placed radially and axially from the first, eccentric position to the second, concentric position to facilitate movement of the pipe, the spring continuously urging the clamp ring such that its sharp innr edge engages the periphery of the inserted pipe; and
(f) a release ring mounted in the casing entrance concentrically of the passage and extending between the interior and exterior of the casing, the release ring being moveable against the clamp ring to displace it out of engagement with the pipe and facilitate removal of the pipe from the casing.

4,298,221
PIPE CONNECTORS
John D. McGugan, Banchory, Scotland, assignor to Hunting Oilfield Services (U.K.) Limited, Aberdeen, Scotland
Continuation-in-part of Ser. No. 815,094, Jul. 13, 1977, abandoned. This application Nov. 30, 1978, Ser. No. 965,095
Claims priority, application United Kingdom, Jan. 26, 1977, 3227/77; Mar. 1, 1977, 8632/77; Nov. 10, 1978, 44120/78
Int. Cl.³ F16L *25/00*
U.S. Cl. 285—328 **12 Claims**

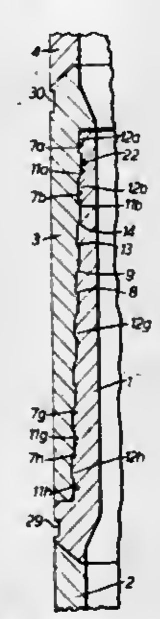

1. A pipe connector comprising:
a tubular pin member having a generally frusto-conical outer peripheral surface;
a tubular box member telescopically engageable with said pin member and having a generally frusto-conical inner peripheral surface corresponding to said frusto-conical surface of said pin member and which overlies said frusto-

conical surface of said pin member when said members are engaged; and
annular projection and groove means provided in said frusto-conical surfaces of said pin member and said box member, extending circumferentially thereof and interengageable to axially lock said pin member and said box member together;
said projection and groove means comprising projections and grooves having crest and root surfaces, being equally axially spaced apart along said frusto-conical surfaces, and having equal axial extents and being arranged so that, on assembly of said pin member and said box member, initial metal-to-metal force fit contact will be made between said crest surfaces of all said projections of said projection means of one of said frusto-conical surfaces and parts of the other of said frusto-conical surfaces between said groove means and adjacent the one of said grooves in which the respective projection is to be engaged;
wherein the radial dimensions of said projections and grooves in such that the expansion of said box member and/or contraction of said pin member resulting from forcing each said projection into the corresponding said groove during engagement of said members does not exceed the elastic limit of the material of said box member and/or said pin member; and
said pin member and said box member are arranged so that surfaces thereof engage one another in abutting force fit engagement when said pin member and said box member are fully interengaged.

4,298,222
TUBE COUPLING
Irving W. Davies, North Olmsted, Ohio, assignor to Jaco Manufacturing Company, Berea, Ohio
Filed Jul. 23, 1980, Ser. No. 171,431
Int. Cl.³ F16L *19/08*
U.S. Cl. 285—341 **3 Claims**

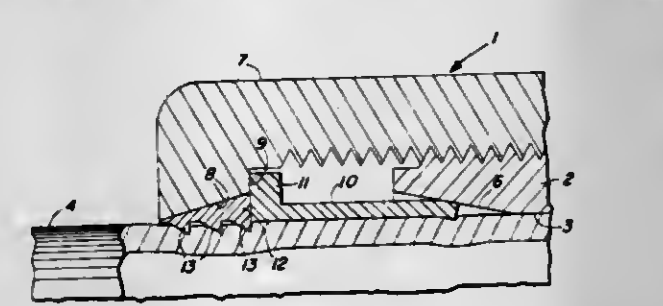

1. A tube coupling comprising nut and body members in screw threaded engagement with each other defining a tube receiving bore and an annular chamber surrounding a tube adapted to be inserted into such bore, said nut and body members having oppositely tapered cam surfaces constituting the end walls of said chamber which move toward each other upon screwing together of said nut and body members; a tube-embracing sleeve in said chamber having a radially contractible axially inner end portion engageable with the cam surface of said body member and having a radially enlarged collar at its axially outer end portion; and an externally tapered radially contractible C-shaped circular grip ring in said chamber engageable with the cam surface of said nut member and having internal circumferentially extending teeth; said collar and large end of said grip ring having interengaged plane annular end faces to transmit axial inward force from said grip ring to said sleeve to effect radial contraction of said axially inner end portion by the cam surface said body member into gripping and sealing engagement with the tube and to permit radial contraction of said grip ring to smaller diameter by the cam surface of said nut member whereat said teeth are embedded in the tube in gripping engagement therewith; said teeth having terminal sloping portions which fade out circumferentially and radially to the major diameter of said teeth in circumferentially spaced relation from the respective ends of said grip ring to preclude pinching of the tube when said grip ring is radially contracted to such smaller diameter.

4,298,223
DOOR LOCK, ESPECIALLY FOR MOTOR VEHICLE DOORS
Kurt Raffelsiefer, Velbert; Herman W. Kurth, and Fritz Hüberle, both of Sindelfingen, all of Fed. Rep. of Germany, assignors to Arn. Kiekert Soehne and Daimler-Benz Aktiengesellschaft, Fed. Rep. of Germany
Continuation-in-part of Ser. No. 898,684, Apr. 21, 1978, abandoned. This application Apr. 16, 1979, Ser. No. 30,546
Claims priority, application Fed. Rep. of Germany, Apr. 21, 1977, 2717696; Jun. 22, 1977, 2728042
Int. Cl.³ E05C *3/26*
U.S. Cl. 292—216 **12 Claims**

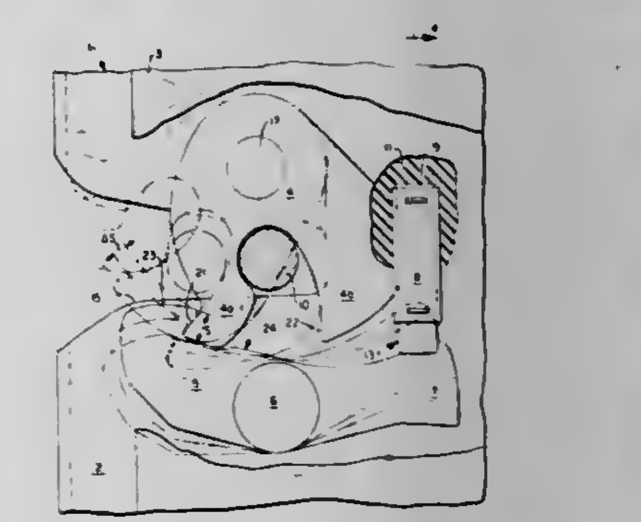

1. A door lock, comprising a fixed locking pin means, a rotary catch means rotatably mounted and adapted to engage the locking pin means upon a closing of the door, the rotary catch means being positionable in an open position, a preliminary locking position, and a main locking position, and means for determining a closure condition of the door, characterized in that the rotary catch means includes at least two radially aligned detent means disposed at different peripheral portions of the rotary catch means, a blocking means is rotatably supported at the lock and is adapted to engage in front of the detent means at defined engagement depths corresponding to the open, preliminary locking, and main locking positions, the engagement depth of the blocking means into the rotary catch means in the open and preliminary locking positions is smaller than the engagement depth in the main locking position, the closure condition determining means includes a microswitch means arranged in the door lock, the microswitch means includes a triggering means, and means are operatively connected to the blocking means so as to permit a pivotal movement in a direction of the microswitch means for actuating the triggering means such that the microswitch means responds only in a position of at least one of the blocking means and means operatively connected thereto at an engagement depth corresponding to the main locking position.

4,298,224
EAVES CLEANING IMPLEMENT
Ralph D. Hansen, and Edna C. Hansen, both of Rte. 5, Box 382, Sioux Falls, S. Dak. 57101
Filed Feb. 25, 1980, Ser. No. 124,122
Int. Cl.³ A47F *13/06*
U.S. Cl. 294—19 R **6 Claims**

1. An implement for cleaning the overhead roof gutter of a building comprising:
(a) a tool positionable in the gutter and composed of oppositely extending coplanar channel-like blades having outer open ends and inner ends and having a raised center section joining the inner ends;

(b) a bracket fixed to the center section and extending angularly upwardly and outwardly therefrom;
(c) an elongated handle having an end attached to the bracket and depending therefrom when the tool is positioned in a gutter with the handle being held by a person

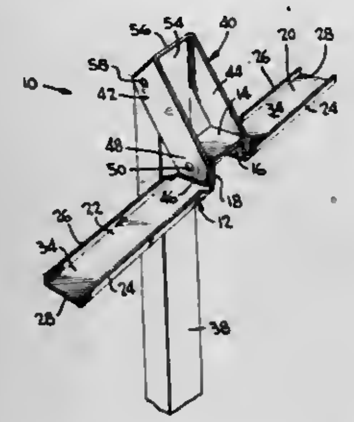

on the ground and moved so as to move the tool back and forth in the gutter, and;
(d) said blades and center section being integral and formed from one piece of stock with the center section being U-shaped and having legs upstanding from the inner ends of the blades.

4,298,225
RAIL HANDLING TONGS
William F. Cogdill, Bardstown, Ky., assignor to Safetran Systems Corporation, Louisville, Ky.
Filed Oct. 29, 1979, Ser. No. 88,841
Int. Cl.³ B66C *1/28*
U.S. Cl. 294—118 **10 Claims**

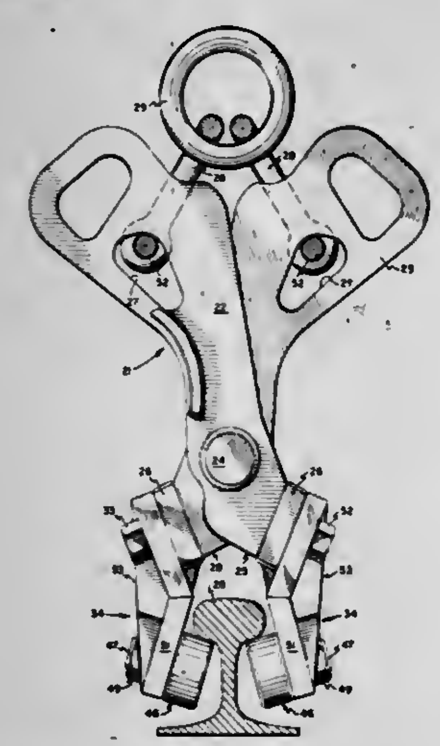

1. Rail handling apparatus for automatically seizing, gripping, raising, carrying, lowering and releasing a rail comprising
angularly pivotable, vertically elongated tong arms connected near their lower ends by a pivot pin and each having means forming a support aperture in its upper end,
a toggle link or shackle linking each support aperture with an overlying crane ring for support by a crane,
and slim tapered tong jaws protruding downward from the lower ends of the tong arms beneath the pivot pin, having converging outer jaw tip surfaces and inner jaw tip surfaces diverging at an acute angle surmounted by upwardly facing rail-supporting ledge surfaces positioned to embrace and support the ball of a rail flanked by the tong jaws in crane-suspended rail-carrying position,
with the converging outer jaw tip surface and the diverging inner jaw tip surface of each jaw forming between themselves a downwardly converging tapered jaw tip on each tong arm, co-acting with the ball of a rail during the juxtaposed descent of the tongs to divert and guide the tong jaws downwardly automatically past the rail ball without upsetting the tongs,
whereby automatic self-hooking of the tong ledge surfaces under the rail ball is achieved merely by downward movement toward the rail.

4,298,226
SUN-ROOF STRUCTURE FOR AUTOMOBILE BODIES
Takashi Mizuma, Hiroshima, Japan, assignor to Toyo Kogyo Co., Ltd., Hiroshima, Japan
Filed Jan. 21, 1980, Ser. No. 113,523
Claims priority, application Japan, Jan. 22, 1979, 54-6333
Int. Cl.³ B60J *7/04*
U.S. Cl. 296—216 **5 Claims**

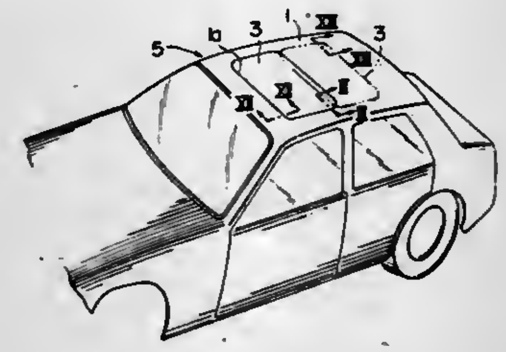

1. Sun-roof structure of a sliding-roof type for automobile bodies, said structure comprising roof panel means formed with opening means having peripheral edge, sliding roof means adapted for closing said opening means in a closing position and movable to a retracted position wherein the sliding roof means is retracted under the roof panel means, guide rail means provided on the roof panel means for guiding the sliding roof means between the closing and retracted positions, said guide rail means including front and rear sections which are downwardly bendably connected with each other, said front section having a front end portion pivotably mounted on the roof panel means, said rear section having a rear end portion pivotably mounted on the roof panel means, cam means provided on the roof panel means along the guide rail means and cam follower means provided on the sliding roof means for engagement in said closing and retracted positions of the sliding roof means with the cam means so that the sliding roof means is lifted when the cam follower means is engaged with the cam means, and means for interconnecting the sliding roof means with the guide rail means so that the guide rail means is lifted when the sliding roof means is lifted.

4,298,227
FOLDING CHAIR
Marc A. Berthier, 141 Bd. Saint-Michel, 75005 Paris, and Alain Y. Chauvel, 49 rue des Rigoles, 75020 Paris, both of France
Filed Aug. 16, 1978, Ser. No. 934,065
Int. Cl.³ A47C *4/00*
U.S. Cl. 297—58 **6 Claims**

1. Folding chair, comprising a front frame with a U-shaped lower part and a U-shaped rear frame, forming together the leg assembly of the chair, a back rest at the upper end of the front frame and a seat tray articulated to the front frame and cooperating with the rear frame, articulation means for the rear frame and for the seat tray being provided on the front frame so that in the folded position of the chair the rear frame and the seat are both situated in the same plane parallel to and outside that

of the front frame, said articulation means for the seat tray comprising connecting members each having at least two branches lying in the same plane, one branch being attached to the side of said seat tray and the other branch extending at an angle from said one branch and being pivotally connected to

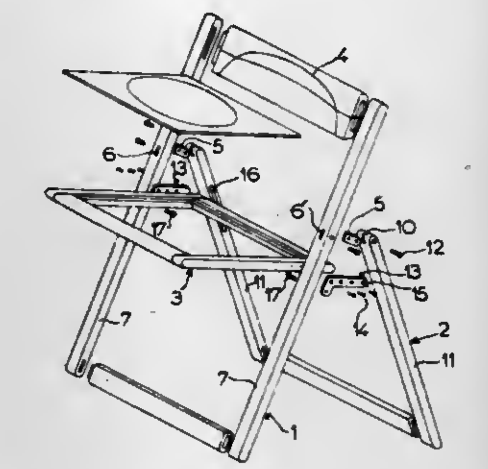

said front frame below said seat tray when in the open position, said articulation means for said rear frame comprising connecting members attached to said front frame above said seat connecting members each extending rearwardly and being pivotally connected to said rear frame, and means for slidably engaging said seat tray with said rear frame.

4,298,228
COMBINATION FEEDING TRAY AND PLAY TABLE
Arthur T. Zampino, and Dolores V. Zampino, both of 120 Beach 19 St., Far Rockaway, N.Y. 11691
Filed Dec. 20, 1978, Ser. No. 971,396
The portion of the term of this patent subsequent to Jun. 13, 1995, has been disclaimed.
Int. Cl.³ A47D *15/00*
U.S. Cl. 297—182 **7 Claims**

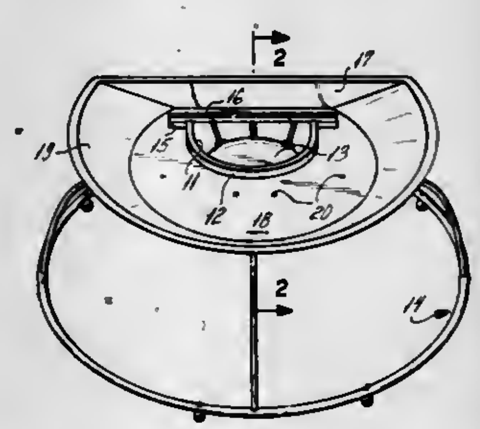

1. A combination feeding tray and play table adapted to be mounted on a chair-like device which comprises a substantially rigid unitary tray provided with a U-shaped opening or recess of sufficient size to accommodate the body of a child, said tray comprising a horizontal surface integral with an upwardly and outwardly inclined sliding surface of substantially equal depth in its entirety, surrounding the front and sides of said opening or recess, said horizontal surface being provided at its inner edge adjacent said U-shaped opening with an upstanding substantially perpendicular extension of sufficient height to prevent toys and food from falling into the seat of said chair-like device, said horizontal surface being additionally provided with counter-sunk openings for removably receiving toys and feeding plates mounted on equally sized and shaped ends adapted to frictionally fit into said openings.

4,298,229
PROCESS FOR DRY MINING PHOSPHATE ORE UTILIZING A SUPERSONIC GAS
Sebastian J. D'Alli, 2405 Ixora Ave., Sarasota, Fla. 33580
Continuation-in-part of Ser. No. 29,057, Apr. 11, 1979, abandoned, and a continuation-in-part of Ser. No. 882,851, Mar. 2, 1978, abandoned, and a continuation-in-part of Ser. No. 669,711, Apr. 12, 1976, abandoned. This application Mar. 6, 1980, Ser. No. 129,615
Int. Cl.³ E21C *41/14*
U.S. Cl. 299—7 **5 Claims**

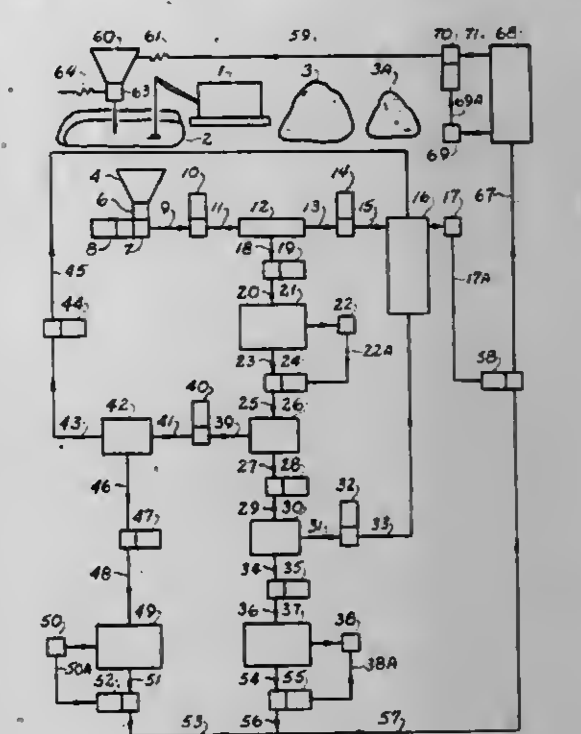

1. A method of processing as mined dry or damp phosphate matrix comprising:
(a) depositing dry or damp phosphate matrix from a mine pit into a stream of carrier gas moving at supersonic velocity;
(b) comminuting said phosphate matrix by the high impact force of said gas moving at supersonic velocity to form a loosely held heterogeneous mass of phosphatic materials, sand and clay, said phosphatic materials comprising phosphate pebbles and finer phosphatic values;
(c) drying said mass of phosphatic materials, sand and clay, with said gas;
(d) transporting said mass of phosphatic materials, sand and clay in said gas at supersonic velocity to a first separation zone to separate said phosphate pebbles from a residual mixture of said finer phosphatic values, sand and clay;
(e) transporting said phosphate pebbles to storage bins at supersonic velocity;
(f) transporting said mixture of finer phosphatic values, sand and clay at supersonic velocity to a plurality of different separating zones arranged in a series-parallel configuration wherein the phosphatic values, sand and clay, are separated from each other by centrifugal force at supersonic velocity;
(g) transporting said phosphatic values at supersonic velocity to storage bins;
(h) recombining said sand and clay in approximately equal proportions by weight at supersonic velocity;
(i) collecting the Radon-222;
(j) combining said recombined mixture of sand and clay with said Radon-222 at supersonic velocity;
(k) transporting said recombined mixture of sand and clay and said Radon-222 at supersonic velocity to the mined out pits; and
(l) depositing said recombined mixture and said Radon-222 therein.

4,298,230
TUNNELLING APPARATUS
Wilfried Krabbe, Dreieich-Buchschlag, Fed. Rep. of Germany, assignor to Philipp Holzmann Aktiengesellschaft, Fed. Rep. of Germany
Filed Jun. 12, 1980, Ser. No. 158,997
Claims priority, application Fed. Rep. of Germany, Jun. 25, 1979, 2925505
Int. Cl.³ E21D *9/10*
U.S. Cl. 299—33 **8 Claims**

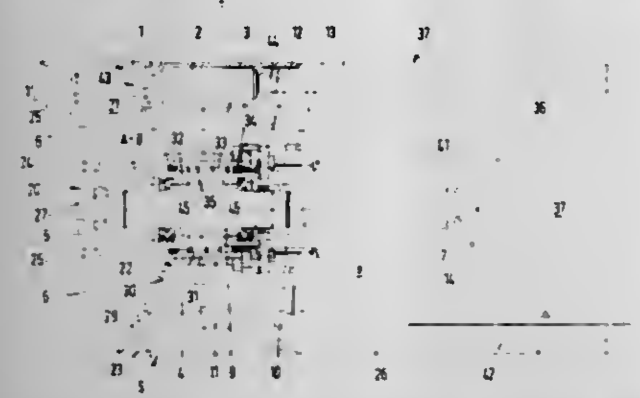

1. A tunnelling apparatus comprising an annular tunnelling element; wall means subdividing said element into a trailing chamber and a leading chamber having an open front end; material-removing means in said leading chamber to remove material located adjacent the front end; said wall means being further defined as having an opening in which said material-removing means are normally located and which is opened when said material-removing means are withdrawn from said leading chamber; means detachably mounting said material-removing means for retraction substantially axially of said element from said leading chamber at least into said trailing chamber; said apparatus further comprising a bearing sleeve surrounding said shaft and in which said shaft is rotatable but axially fixed; a housing sleeve surrounding said bearing sleeve and in which said bearing sleeve is axially movable as a cylinder and defines an annular fluid chamber adapted to receive pressure fluid from a source.

4,298,231
APPARATUS FOR USE IN UNDER-GROUND LONG WALL MINE WORKINGS
Adam M. Spence, 19 Riverhead, Sprotborough, Doncaster, Yorkshire, and James R. Goff, The Barn House, Brockenhurst, Hampshire, both of England
Filed Jan. 14, 1980, Ser. No. 111,631
Claims priority, application United Kingdom, Dec. 29, 1978, 50349/78
Int. Cl.³ E21C *29/10*
U.S. Cl. 299—50 **7 Claims**

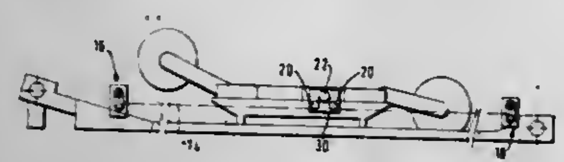

1. In or for an underground mine working in which the material to be mined is removed from a face of the working by a cutting machine operative to remove material from the face in each of its opposite directions of traverse therealong, the combination of a haulage chain adapted to co-operate with a drive element on the cutting machine, and a fluid-powered take up means located at each end of the haulage chain by which the machine undergoes a working traverse to remove the material from the face, wherein said take up means serves to take up slack in the haulage chain during such traverse of the face and control means operatively connected to both of said take up means is provided for rendering the take up means operative to take up the slack, or inoperative to provide a substantially fixed anchorage in coordination with the direction of traverse of the machine.

4,298,232
MINING MACHINE
Charles F. Mendola, South Bend, Ind., assignor to John J. Simala, South Bend, Ind., a part interest
Filed Dec. 26, 1979, Ser. No. 106,679
Int. Cl.³ E21C *27/12, 29/24*
U.S. Cl. 299—64 **32 Claims**

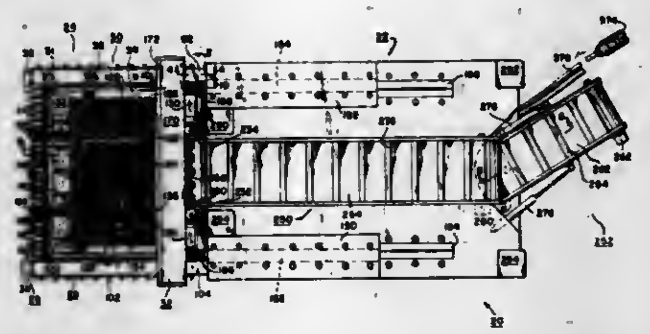

1. A mining machine comprising an undercutting means for cutting into a coal vein at the floor level as said mining machine advances, a relief cutting means for cutting laterally from said undercutting means and for cutting progressively higher kerfs along the sides of the coal vein upwardly from said undercut, means for moving said relief cutting means from a lower position to a higher position to cut said kerfs, a chisel means for dislodging the coal above said undercut and between said kerfs in progressively higher extractions, a collecting means disposed rearwardly from said undercutting means for collecting said coal as it is removed by said undercutting and relief cutting means and dislodged by said chisel means, a loading means for receiving the coal from said collecting means and for moving the coal from said collecting means for removal from the mine, an elevating means for raising said relief cutting means and said chisel means in a substantially vertical manner so that progressively higher kerfs can be made by said relief cutting means and progressively higher extractions from the coal vein can be made by said chisel means after an initial cut by said undercutting means, said progressively higher extractions being substantially parallel to lower extractions, and a transport means for moving said machine, having a track assembly pivotally mounted to said machine.

4,298,233
MILLING TOOL FOR A ROTATING MILLING CYLINDER
Gerd Elfgen, Theisenkreuzweg 10, 5303 Bornheim-Rösberg, Fed. Rep. of Germany
Filed Jun. 7, 1979, Ser. No. 46,328
Int. Cl.³ E21C *35/18*
U.S. Cl. 299—91 **9 Claims**

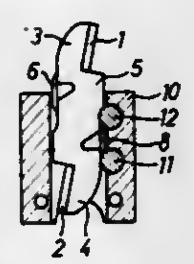

1. A milling tool for insertion into a tool holder having an opening for receiving said tool, comprising an elongated body having a rectangular cross-section, a milling cutting head disposed at each end thereof, said heads being dimensioned so as not to protrude beyond said rectangular cross-section, a protuberance provided on opposite sides of the body adjacent and below the cutting heads, said tool holder having a partial opening extending through the wall therein, stop means disposed in said partial opening and being configured to fill the partial opening with a part thereof extending into said tool holder opening, said stop means engaging one of said abutments when the body is positioned in said tool holder opening whereby the opposite abutment engages another part of the wall of said tool holder opening thereby effecting the holding of the body in the opening.

4,298,234
DRAWERS AND DRAWER COMPONENTS
Leon G. Litchfield, and Terence Hardy, both of Belper, England, assignors to L.B. (Plastics) Limited, Belper, England
Division of Ser. No. 816,039, Jul. 15, 1977, Pat. No. 4,162,114. This application Apr. 6, 1979, Ser. No. 27,765
Claims priority, application United Kingdom, Apr. 26, 1977, 17290/77
Int. Cl.³ F16C *29/00, 29/10*
U.S. Cl. 308—3.6 **6 Claims**

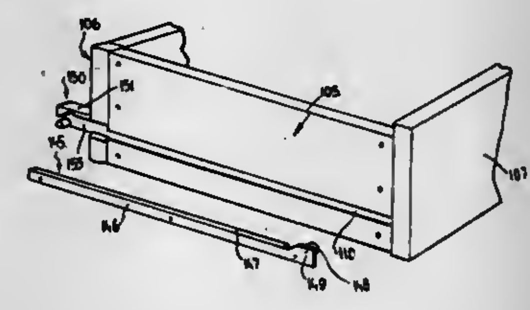

1. In an article of furniture comprising a cabinet or housing, a drawer assembly comprising a pair of drawer runners of L-shaped cross-section mounted in said cabinet or housing, and a drawer slidably supported on said drawer runners, the drawer having side walls provided with longitudinal tracks formed integrally therewith and having relatively narrow entrances thereto defined by upper and lower longitudinally extending lips projecting across the entrances to said tracks and being flush with the outer surfaces of said side walls, and the runners having horizontal drawer-engaging flanges extending into said tracks through said entrances and carrying front drawer guide and bearing members at their forward ends for supporting the drawer in sliding relationship thereon, the guide and bearing members being confined within said tracks by virtue of the narrow entrances thereto.

4,298,235
BEARING SYSTEM FOR ISOLATORS
Anton F. Squirrell, Samstagern, Switzerland, assignor to Grovag Grossventiltechnik A.G., Glarus, Switzerland
Filed Oct. 3, 1979, Ser. No. 81,343
Claims priority, application United Kingdom, Oct. 9, 1978, 39826/78
Int. Cl.³ F16C *27/02*
U.S. Cl. 308—26 **10 Claims**

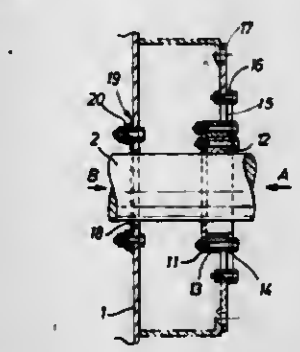

1. A bearing system fitted around a shaft of an isolator, comprising a shaft seal fitted around the shaft, the shaft seal comprising at least one flexible annular metal disc attached to the isolator frame, and a bearing fitted around the shaft at a location spaced from the shaft seal, the bearing comprising at least three individually removable bearing segments secured to a bearing mounting by means of at least one flexible annular diaphragm.

4,298,236
SAFETY LOCK SYSTEM FOR VERTICALLY STACKED STORAGE ELEMENTS
Robert N. Laroche, St. Julie, Canada, assignor to Artopex Inc., Laval, Canada
Filed Jul. 14, 1980, Ser. No. 168,738
Int. Cl.³ E05B *65/46;* **E05C** *15/04*
U.S. Cl. 312—215 **14 Claims**

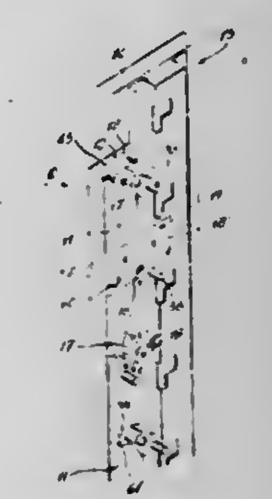

1. A safety lock system for vertically stacked slideably retained storage elements, said system comprising one or more locking bars vertically slideably retained in alignment in vertical support guide means, two or more cam elements pivotally secured on a respective fixed pivot axis to said support guide means adjacent an opposed end of each said locking bars, each said cam elements having a cam portion retained in planar alignment with said locking bars and an activating arm portion for rotating said cam portion about said fixed pivot axis, a displaceable space below each cam element portion defined between one of said locking bar opposed ends and said cam portion, an engaging member secured to one or more of said storage elements to engage and displace said activating arm portion of an associated cam element by predetermined displacement of a storage element having said engaging member to cause rotation of said associated cam portion to slidingly displace said locking bars thereabove through said displaceable space in immovable contact with their associated cam elements and arrest sliding displacement of said locking bars therebelow to maintain them in immovable contact with their associated cam elements to thereby immobilize all other cam elements against rotational displacement and thereby prevent slideable displacement of all other of said storage elements having an engaging member.

4,298,237
PRINTED WIRING BOARD INTERCONNECTION APPARATUS
Gary L. Griffith, Arvada, and Charles J. Sherman, Westminster, both of Colo., assignors to Bell Telephone Laboratories, Incorporated, Murray Hill, N.J.
Filed Dec. 20, 1979, Ser. No. 105,501
Int. Cl.³ H01R *13/64*
U.S. Cl. 339—17 L **17 Claims**

1. Electrical interconnection apparatus comprising an electrical component (20) having at least a row of contact areas (22) affixed to a flat surface thereof along a first axis and a row of contact springs (e.g., 33), each of said springs corresponding to one of said contact areas (22), said springs having curved contact surfaces adapted for engaging said contact areas (22),

characterized in an insulative mask (e.g., 23) overlying said row of contact areas (22), said mask having a row of apertures (e.g., 24) corresponding to said contact areas (22) for permitting electrical contact with each of said contact areas (22) by said curved contact surface of the corresponding one of said springs (e.g., 33) and guide means (31) for guiding said compo-

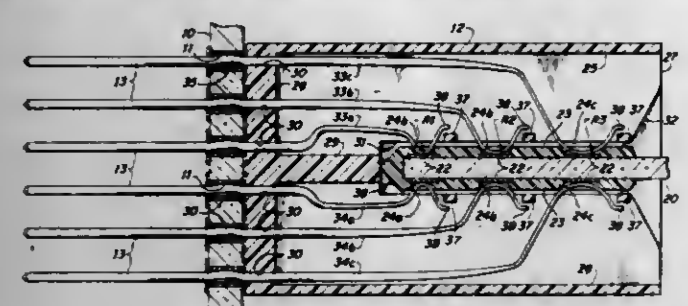

nent (20) and said mask along said axis into sliding engagement with said contact spring surfaces and in that said apertures and said contact surfaces are correspondingly, individually dimensioned so that said contact areas and said springs are maintained apart by said mask until corresponding contact areas and springs are in opposition.

4,298,238
MULTI-PIN ELECTRICAL PLUGS
Derek Hayes, Home Farm Cottage, St. Michael, Bungay, Suffolk NR35 1NF, Great Britain
Filed Dec. 19, 1979, Ser. No. 105,027
Claims priority, application United Kingdom, Jan. 5, 1979, 000405/79
Int. Cl.³ H01R *13/508*
U.S. Cl. 339—63 M **12 Claims**

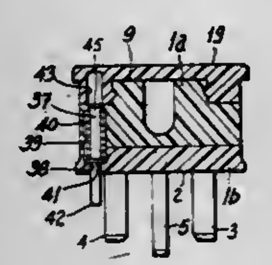

1. A multi-pin electrical plug comprising a base having one surface from which the pins project, a cover removably mounted on a second surface of the base opposite to said one surface, interengaging means on the cover and the base by means of which the cover can be slid in a direction substantially perpendicular to the axes of said pins into a position of securement on the base, movable locking means for automatically locking said cover to the base, and resilient means which urges the locking means into a position in which, provided the cover is in said position of securement on the base, it locks the cover to the base whether or not the plug is inserted into a corresponding electrical socket.

4,298,239
TEST ACCESS APPARATUS
Anthony R. Montalto, Edison; Louis J. Scerbo, Succasunna, and Jeremia P. Starace, Randolph Township, Morris County, all of N.J., assignors to Bell Telephone Laboratories, Incorporated, Murray Hill, N.J.
Filed Sep. 26, 1979, Ser. No. 78,960
Int. Cl.³ H01R *13/629*
U.S. Cl. 339—66 M **2 Claims**

1. In combination with a main frame, electrical test apparatus for accessing a test field associated with said frame and providing electrical connection between a test station and a plurality of test points adapted to be accessible through apertures in said field, said field including a plurality of protuberances, each of said protuberances interposed between pairs of said test points, said test apparatus

characterized by

a body having a plurality of channels arranged in mirror-image relation to said apertures and a plurality of recesses arranged in mirror-image relation to said protuberances for registering said protuberances,

a plurality of electrically conductive spring-loaded pins having a movable end projecting beyond said body and a spring end fixed in said body,

means for electrically joining each said fixed spring end to said test station, and

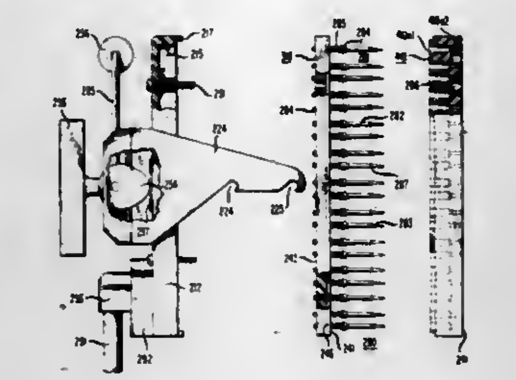

means for holding said body and said test field in juxtaposed relation to enable each said movable end to penetrate each of said apertures and contact each one of said test points, said holding means including

means for attaching said holding means to said frame;

an eccentric cam mounted on said attaching means;

a drive plate affixed to said body and aligned with said cam; and

means for rotating said cam in increasing direction of eccentricity to slidably contact said drive plate and cause displacement of said body relative to said attaching means.

4,298,240
CABLE CONNECTOR
Jacques Grillet, 54, Route de Saint-Nizier, Seyssins (Isere), France
Filed Feb. 1, 1980, Ser. No. 117,768
Claims priority, application France, Feb. 2, 1979, 79 03398
Int. Cl.³ H01R *11/15*
U.S. Cl. 339—109 **26 Claims**

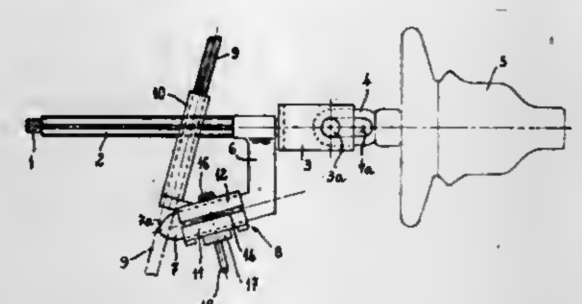

1. A device for connecting a first electrical cable to a second electrical cable, comprising:

a first member formed with a sleeve adapted to receive and engage said first cable, and a cylindrical pin connected to said sleeve but offset from the axis thereof;

a second member formed with an expandable opening and adapted to receive said pin, said second member being formed with a sheath adapted to receive and engage said second cable; and

clamping means adapted to close said opening around said pin and anchoring said sheath to the first member, said first member and said second member being composed of electrically conductive material whereby the clamping of said second member around said pin electrically interconnects and mechanically connects said cables.

4,298,241
SPLICER FUSE INTEGRATED IN LINE CORD PLUG
Elliot Bernstein, Rockville Centre, N.Y., assignor to Bel Fuse, Inc., Jersey City, N.J.
Filed Jan. 28, 1980, Ser. No. 115,670
Int. Cl.³ H01R *13/66*
U.S. Cl. 339—147 P **6 Claims**

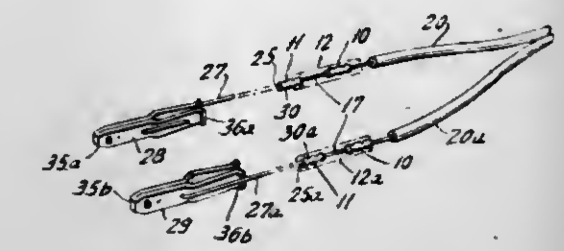

1. A fused plug having a main body; a pair of prongs extending from said main body and a line cord having a pair of wires extending into said main body;

a fused connection between at least one of said wires and one of said prongs; said fused connection comprising a fuse wire, a sleeve secured at one end of the sleeve to one end of said fuse wire, the other end of said sleeve being secured to said line cord wire, the opposite end of said fuse wire being connected electrically to one of said prongs; said sleeve being crimped to the first end of the fuse wire at one end of said sleeve, the opposite end of said sleeve being crimped to said line cord wire; and an additional wire connected to said prong and a second sleeve secured to said opposite end of the fuse wire remote from the line cord wire; the end of the second sleeve opposite the end which is connected to the fuse wire being connected to said additional wire; said two sleeves being spaced from each other with the fuse wire extending between.

4,298,242
ELECTRICAL SOCKET CONTACT
William H. McKee, West Covina, Calif., assignor to TRW Inc., Elk Grove Village, Ill.
Filed Feb. 23, 1979, Ser. No. 14,694
Int. Cl.³ H01R *13/11*
U.S. Cl. 339—258 R **22 Claims**

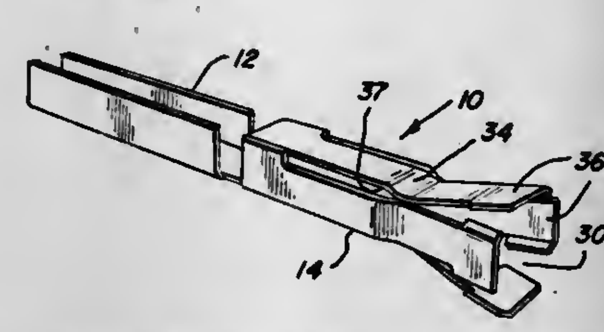

1. An electrical contact comprising a first box-like end and at least three discrete resilient walls extending from said first end; said walls being inwardly bent to form a restrictive throat portion and having portions outwardly flared from said throat portions to define a contact entrance oppositely disposed to said box-like end; each of said wall flared portions being inwardly resiliently movable for urging the wall throat-forming portions together; each of said walls being of a width greater than the width of the throat portion formed thereby and arranged relative to each other at said throat portion so as to extend beyond the edge of one adjacent wall only when said throat forming portions are urged together.

4,298,243
PRE-INSULATED FLAG-TYPE TERMINAL
Robert C. Swengel, Jr., York County; Jon A. Fortuna, and George R. Defibaugh, both of Cumberland County, all of Pa., assignors to AMP Incorporated, Harrisburg, Pa.
Filed Jun. 12, 1978, Ser. No. 914,310
Int. Cl.³ H01R *11/08*
U.S. Cl. 339—276 F **3 Claims**

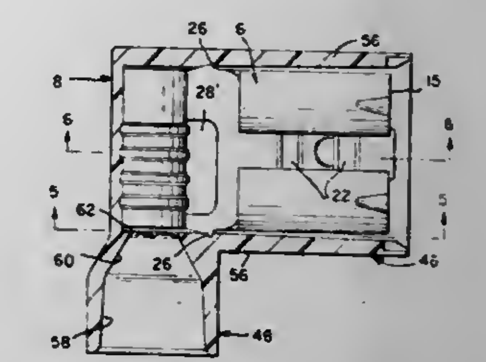

1. A pre-insulated flag-type terminal device which is intended to be crimped onto the stripped end of an insulated wire, said terminal device comprising a metallic contact terminal and an insulating housing means,

said terminal comprising a contact portion, a crimp portion, and a flat transition section, said transition section being between said contact portion and said crimp portion and having side edges which extend from said contact portion to said crimp portion, an opening between said side edges, said opening having one edge which is proximate to said crimp portion and which extends transversely of said side edges,

said crimp portion comprising an arm extending from said transition section in the direction opposite to the direction of said contact portion, said arm being reversely formed towards said contact portion and towards said transition section, said arm having an end which extends transversely across said transition section, said end having an ear extending centrally therefrom into said opening, said ear having a leading edge which extends beside said one edge of said opening, an adjacent portion of said end of said arm which is on one side of said ear being adjacent to said transition section whereby said arm forms a tubular ferrule having a wire-receiving end which is at one of said side edges,

said housing means being generally flag-shaped and having a terminal housing portion and wire-receiving housing arm extending therefrom, a terminal receiving cavity in said housing portion and a wire-receiving opening extending through said housing arm and communicating with said cavity,

said terminal being in said cavity with said ferrule in alignment with said opening,

said wire-receiving opening having a conical inner end portion adjacent to said cavity, a constricted wire-admitting port at the inner end of said conical inner end portion, said port being immediately adjacent to, and concentric with, said wire-receiving end of said ferrule whereby,

upon insertion of the stripped end portion of an insulated wire into said opening, the leading end of said wire will be guided by said conical surface through said port and will immediately enter said ferrule, and upon subsequent crimping, said ferrule will be crimped onto said stripped end of said wire.

4,298,244
INFORMATION RECORDING METHOD AND APPARATUS
Yutaka Kaneko, Kawasaki, and Mitsuhisa Fukuda, Tokyo, both of Japan, assignors to Ricoh Company, Ltd., Japan
Filed Feb. 28, 1979, Ser. No. 16,101
Claims priority, application Japan, Feb. 28, 1978, 53-22468; May 19, 1978, 53-59810; Jan. 20, 1978, 53-74723
Int. Cl.³ G03H *1/22*
U.S. Cl. 350—3.78 **1 Claim**

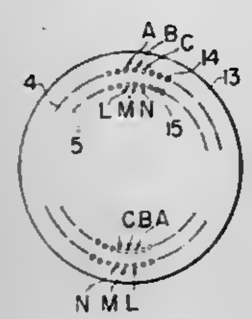

1. In an information recording method capable of recording multiple pieces of hologram information in areas disposed along concentric tracks arranged on the surface of a hologram recording medium disc, and of reading and reproducing the recorded hologram information, the improvement comprising the steps of:
setting a plurality of n different diameter concentric tracks on the surface of said recording medium disc;
recording an identical series of hologram patterns of information around substantially the entire circumference of each of said tracks, with the recording position of said patterns of information in each track shifted by $2\pi/n$ rad with respect to like patterns in the other tracks;
illuminating the medium disc at a circumferential location thereof with an illuminating light to reproduce hologram information at that circumferential location;
rotating the medium disc in one of the clockwise and counterclockwise directions no more than π/n rad, to bring any selected one of the series of information to the fixed circumferential location;
holding the disc stationary while illuminating the disc; and deflecting the illuminating light radially of the disc to illuminate the selected information in its respective track.

4,298,245
WAVEGUIDES WITH A LOW BIREFRINGENCE
Hubert Aulich, and Alfred Papp, both of Munich, Fed. Rep. of Germany, assignors to Siemens Aktiengesellschaft, Berlin & Munich, Fed. Rep. of Germany
Filed Aug. 6, 1979, Ser. No. 64,045
Claims priority, application Fed. Rep. of Germany, Sep. 21, 1978, 2841162
Int. Cl.³ G02B *5/172;* G02F *1/09*
U.S. Cl. 350—96.29 **10 Claims**

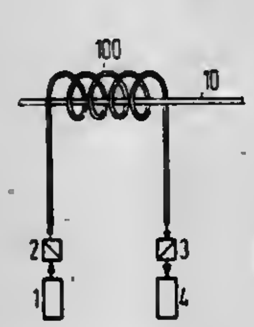

1. In a magneto-optical transducer having a light waveguide for conducting light which waveguide is wound into a coil, and having means for projecting polarized light into at least one end of the waveguide and means for measuring the amount of rotation in the polarized light leaving at least one end of the waveguide, the improvement comprising said light waveguide being a cladded optical fiber having a core of quartz glass and a cladding of synthetic material so that the light waveguide even with mechanical stresses from being wound in a coil has no noticeable birefringence.

4,298,246
REFLECTION TYPE SCREEN
Seishiro Iwamura, Nagaokakyo, Japan, assignor to Mitsubishi Denki Kabushiki Kaisha, Tokyo, Japan
Filed Nov. 7, 1979, Ser. No. 92,032
Claims priority, application Japan, Nov. 8, 1978, 53-137696
Int. Cl.³ G03B *21/56*
U.S. Cl. 350—122 **6 Claims**

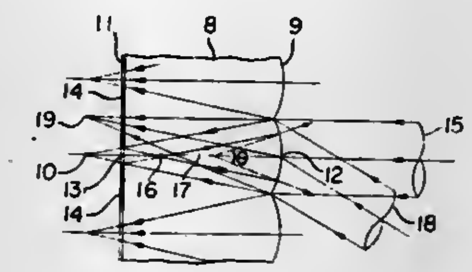

1. A reflection type projection screen, comprising,
a transparent substrate having a thickness of 0.1 to 2.0 mm;
a plurality of convex lenses formed on the front surface of said transparent substrate and being of a size so as to be nondiscriminatable from an observer's position;
said convex lenses having a focal length which gives a focus behind the rear surface of said transparent substrate and wherein the ratio of vertical height to transversal width of said lenses is greater than one and the vertical height is 0.1 to 2.0 mm;
said rear surface of said transparent substrate having a plurality of mirror areas and a plurality of light absorbing areas where the mirror areas constitute from 28% to 37% of the total area and the light absorbing areas constitute from 72% to 63% of the total area;
wherein light rays arriving from a projector substantially parallel to the optical axis of the said lenses impinge upon the mirror areas, are focused to a point within said substrate and pass back through said lenses to be externally diffused, while light rays arriving at an angle not substantially parallel to the optical axis of said lenses impinge upon the light absorbing areas and are absorbed;
wherein the thickness and refractive index of said transparent substrate and the focal length of said lenses are selected so as to diffuse the reflected rays at the same angle as the range of observation.

4,298,247
THICK OPTICAL ELEMENT HAVING A VARIABLE CURVATURE
Guy Michelet, Paris, and Jean-Pierre Treton, Ste Genevieve des Bois, both of France, assignors to Quantel S.A., Orsay, France
Filed Apr. 1, 1980, Ser. No. 136,266
Claims priority, application France, Apr. 4, 1979, 79 08451
Int. Cl.³ G02B *5/10*
U.S. Cl. 350—295 **10 Claims**

1. An optical element having a variable curvature and optical properties which vary as a function of that curvature, said element comprising a first bimorph structure which has at least one component member which is made from a piezoelectric material, first electrodes for applying a voltage to said bimorph structure to vary its curvature, at least one reinforcing piezoelectric bimorph structure, second electrodes for applying a voltage to the reinforcing bimorph structure and respectively connected to the first supply electrodes, the reinforcing bimorph structure having a component member adjacent a corresponding component member of the first bimorph structure, and a layer of elastic material which interconnects said adjacent component members and has a tensile strength which is low relative to the tensile strength of component members constituting the bimorph structures of piezoelectric material.

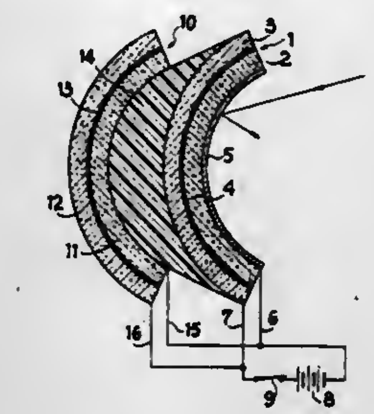

4,298,248
PIVOTAL SUPPORT WITH INDEPENDENT ADJUSTING ELEMENTS AND LOCKING MEANS
Roger H. Lapp, Silver Spring, Md., assignor to The United States of America as represented by the Secretary of the Navy, Washington, D.C.
Filed May 16, 1980, Ser. No. 150,389
Int. Cl.³ G02B *5/08*
U.S. Cl. 350—310 **16 Claims**

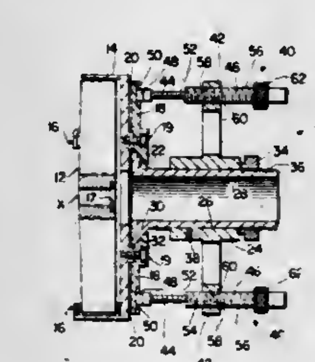

1. A device for supporting optical elements and adapted for angular adjustment comprising:
a support element;
an optical element mount operably supported by said support element;
means for pivotally connecting said optical element mount to said support element having a locking and non-locking mode;
means for providing an adjusting surface connected with said optical element mount, said adjusting surface means being capable of limited flexure without significantly effecting the position or causing distortion of the shape of said optical element mount;
adjustment means movably connected to said support element and extending to said adjusting surface means for causing angular adjustment of the optical element mount;
said pivotally connecting means including means for locking said pivotally connecting means whereby said optical element mount is substantially maintained in a fixed position relative to the support element in said locking mode.

4,298,249
ELECTRO-OPTICAL DISPLAY HAVING AN IMPROVED REFLECTOR AND METHOD OF MAKING
Ernst Gloor; Meinolph Kaufmann, both of Fislisbach, Switzerland, and Allan R. Kmetz, Murray Hill, N.J., assignors to BBC Brown, Boveri & Company, Ltd., Baden, Switzerland
Filed Aug. 15, 1979, Ser. No. 66,696
Claims priority, application Switzerland, Dec. 20, 1978, 12925/78
Int. Cl.³ G02F *1/133*
U.S. Cl. 350—338 **10 Claims**

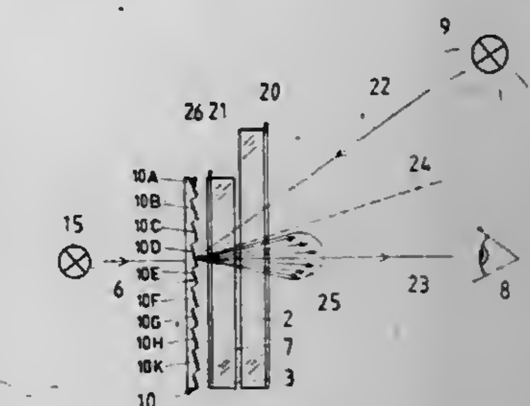

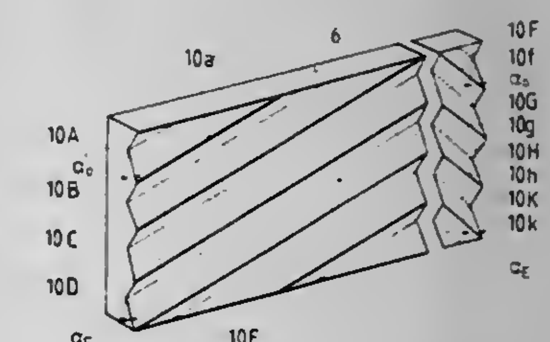

1. An electroptical display with a vertical display plane, composed of parallel and planar front and rear cell plates, each of which is provided with electrode coatings, and between which is disposed a diplay medium, at least said front plate, being transparent, comprising:
a thermoplastic reflector located on said rear cell plate and formed with a light reflecting structure comprising plural reflecting strips each inclined at an angle with respect to the plane of said plates and extending rectilinearly in at most two different directions over the surface of the reflector, said reflecting strips having reflecting surfaces which look upwardly to reflect light in a direction generally perpendicular to said front and rear cell plates so that ambient light from above the display is reflected to an observer located in front of the display, and the surface of said reflector adjacent said rear cell plate being at least partially diffusely reflecting;
wherein said angle α has a value in the range $20°\leq\alpha\leq 40°$.

4,298,250
SOLID ELECTROCHROMIC DEVICES
Gary D. Boyd, Rumson, N.J.; Sarat K. Mohapatra, Acton, Mass.; Benjamin Tell, Matawan, N.J.; Sigurd Wagner, Evergreen, Colo., and Fred Wudl, Chester, N.J., assignors to Bell Telephone Laboratories, Incorporated, Murray Hill, N.J.
Filed Oct. 31, 1978, Ser. No. 956,391
Int. Cl.³ G02F *1/17, 1/23*
U.S. Cl. 350—357 **10 Claims**

1. A device comprising, (1) a solid electrochromic material, (2) a first and second electrode, said electrodes being in intimate contact with said electrochromic material and having means for applying an electric potential between said electrodes, (3) means for making electromagnetic radiation inci-

dent on said electrochromic material, and (4) means for observing an optical modification in said electrochromic material resulting from imposition of said electric potential CHARACTERIZED IN THAT said solid electrochromic material, (1) has a charge carrier from group I of the Mendelevian periodic table, (2) has an electronic transference number at room tem-

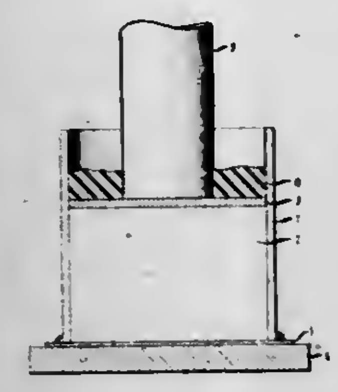

perature less than 10^{-3}, (3) has a resistivity less than 2×10^{4} ohm-cm, (4) has a chemically bound constituent which undergoes an electrically induced coloration, and (5) comprises a polyhetero acid; whereby when a potential is applied between said first and second electrode an optical change is produced in said electrochromic material.

4,298,251

DUAL MACRO ZOOM OPTICAL SYSTEM

Rudolf Hartmann, Winter Park, Fla., assignor to Bell & Howell Company, Chicago, Ill.

Continuation-in-part of Ser. No. 744,835, Nov. 24, 1976, abandoned. This application Sep. 14, 1979, Ser. No. 75,653

Int. Cl.³ G02B *15/18*

U.S. Cl. 350—428 **8 Claims**

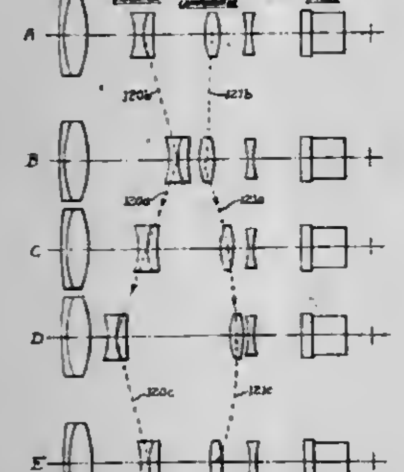

1. A variable focal length optical system which is focusable within a normal range defined at one end by a normal telephoto condition and at the other end by a normal wide angle condition, and being continuously focusable refractively by repositioning of internal lens elements within a first macro range defined at one end by a macro wide angle condition and at the other end by the normal wide angle condition, and being continuously focusable refractively by repositioning of internal lens elements within a second macro range defined at one end by a macro telephoto condition and at the other end by the normal telephoto condition, said optical system comprising focusing lens means for focusing said optical system on an object located within the normal range, a zoom lens assembly including variator lens means, compensator lens means and a camming sleeve having a variator camming slot and a compensator camming slot, said variator lens means and said compensator lens means being located in said camming sleeve and being mutually displaceable therein in a predetermined relationship for varying the focal length of said optical system, and collimator lens means for collimating rays from said compensator lens means and occupying a fixed position in said optical system irrespective of the focal length thereof, said variator lens means and said compensator means occupying predetermined positions corresponding to the various conditions of said optical system and which maintain the object distances finite throughout the range of said positions, said variator lens means including a variator holder, a variator lens group mounted therein, and a variator pin protruding therefrom and into said variator slot, said variator slot having first and second end portions and a middle portion therebetween respectively corresponding to the first macro range, the axis of said second end portion of said variator slot lying substantially in a plane, the second macro range, and the normal range, said compensator lens means including a compensator holder, a compensator lens group mounted therein, and a compensator pin protruding therefrom and into said compensator slot, said compensator slot having first and second end portions and a middle portion therebetween respectively corresponding to the first macro range and the second macro range and the normal range, the axis of said second end of portion of said compensator slot lying substantially in a plane, to permit continuous macro focusing at either end of the zoom range without extending the optical system beyond its normal focusing range length.

4,298,252

REAR STOP TYPE LENS SYSTEM

Yoshikazu Doi, Omiya; Takaaki Uchida, Iwatsuki, and Yutaka Sakai, Omiya, all of Japan, assignors to Fuji Photo Optical Co., Ltd., Japan

Filed Aug. 30, 1979, Ser. No. 71,046

Int. Cl.³ G02B *9/36*

U.S. Cl. 350—470 **5 Claims**

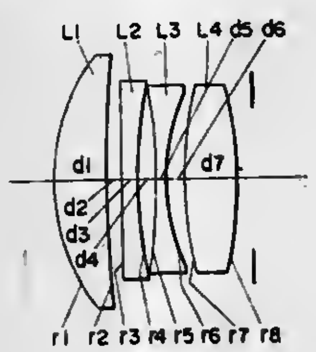

1. A lens system wherein one convex meniscus lens L1 having its convex surface directed toward the object side, two concave lenses L3 and L2 each having a concave surface of small radius of curvature directed toward the image side and one biconvex lens L4 are arranged in the order mentioned from the object side and a diaphragm is positioned immediately to the rear of the lens L4, which lens system is characterized by satisfying the following requirements:

$$0.4 < 1/r2 - 1/r3 < 0.8,\ -0.2 < -\frac{1}{r3} < 0.2 \quad (1)$$

$$1.0 < 1/r6 - 1/r7 < 1.5 \quad (2)$$

$$2.4 < 1/r1 < 3.2 \quad (3)$$

$$1.7 < N1, N4 \quad (4)$$

wherein r1, r2, r3, r6 and r7 denote the radii of curvature respectively of the first, second, third, sixth and seventh surfaces and N1 and N4 denote the refractive indices respectively of the lenses L1 and L4.

4,298,253

METHOD AND APPARATUS FOR PRESENTING TEST IMAGES AT DIFFERENT DISTANCES FROM A SUBJECT

Luc A. Tagnon, Saint Mande, France, assignor to Essilor International, "Cie Generale d'Optique", Creteil, France

Filed Oct. 2, 1979, Ser. No. 81,149

Claims priority, application France, Oct. 5, 1978, 78 28452

Int. Cl.³ A61B *3/02*

U.S. Cl. 351—17 **10 Claims**

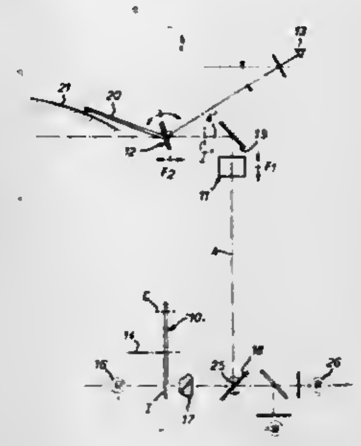

2. Apparatus for presenting test images to a subject at different distances but for a constant visual acuity, said apparatus comprising a test holder member, a lens system for forming an image of a test indicia carried by said test holder member, a reflecting element for directing the test image towards the subject, means for adjusting the position of said lens system along its optic axis, and means for adjusting the position of said reflecting element along an axis parallel to a continuation of said optic axis of said lens system, and means for coordinating the adjustment of the positions of said lens system and said reflecting element so as to maintain the visual angle for the subject constant.

4,298,254

DEVICE FOR REAR VIEW VISION FOR SPECTACLES

Cornelius Reddick, 2 Forest St., Boston, Mass. 02119

Filed Apr. 25, 1979, Ser. No. 33,103

Int. Cl.³ G02C *7/14, 9/04*

U.S. Cl. 351—50 **2 Claims**

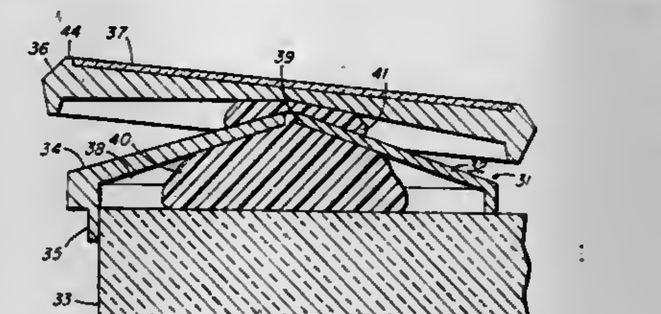

1. Rearview reflection means for spectacles comprising:

a mounting base having a base surface shaped to fit against the rearward surface of a spectacle lens,

securing means to secure the base surface against a spectacle lens,

a reflection surface,

a support member for said reflection surface joining said reflection surface to said mounting base approximately parallel with the base surface of said mounting base, said support member and mounting base being two separate elements adapted to be fixed together by means of an adhesive, said adhesive being originally a putty-like pad adapted to harden to a rigid mass, whereby said support member is originally adjustable to provide that the reflection surface can be adjusted to a desired rearward viewing angle.

4,298,255

APPARATUS FOR PREFLASHING MOTION PICTURE FILM

Robert E. Gottschalk, Los Angeles, Calif., assignor to Panavision, Incorporated, Tarzana, Calif.

Filed Jul. 14, 1980, Ser. No. 168,518

Int. Cl.³ G03B *21/32*

U.S. Cl. 352—85 **14 Claims**

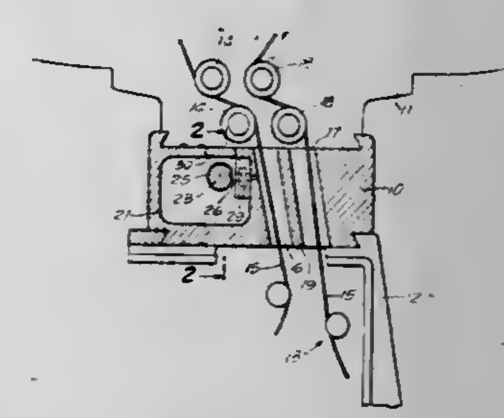

1. Apparatus for preflashing unexposed motion picture film as it travels from a film magazine into the housing of a motion picture camera, comprising in combination: wall means forming a cavity, a light source within said cavity, a translucent rod extending into said cavity and having a portion exposed to said light source, said rod having an opaque lateral surface interrupted along one side by an axially extending light transmitting window, said wall means having an elongated opening through which light from said window can preflash the motion picture film, and means located exteriorly of said cavity for moving the translucent rod to change the amount of light passing through said opening.

4,298,256

EXPOSURE CONTROL DEVICE FOR CAMERA

Masaharu Kawamura, Kawasaki; Yoshihiro Shigeta, Tokyo; Masanori Uchidoi, Yokohama; Yoji Sugiura, Yokohama, and Hiroshi Yamamoto, Yokohama, all of Japan, assignors to Canon Kabushiki Kaisha, Tokyo, Japan

Division of Ser. No. 913,544, Jun. 8, 1978, abandoned. This application Jan. 16, 1979, Ser. No. 3,854

Claims priority, application Japan, Jun. 15, 1977, 52-70748

Int. Cl.³ G03B *7/093, 15/05*

U.S. Cl. 354—23 D **3 Claims**

1. An automatic exposure control device for a camera capable of permitting flash photography, said device comprising:

exposure computing means for natural light photographing,

said computing means arranged to generate an exposure signal corresponding to the brightness of an object to be photographed;

exposure computing means for flash photographing, said computing means being arranged to generate an exposure signal suitable for a flash photographing operation;

exposure control means for performing exposure control in response to one of the exposure signals generated by said natural light photographing exposure computing means and said flash photographing exposure computing means;

change-over means for applying one of the exposure signals of the natural light photographing exposure computing means and the flash photographing exposure computing means to said exposure control means;

electromagnetic release means for actuating the internal mechanism of the camera, said release means being arranged to produce an electrical signal when it operates;

signal generating means which generates a selection signal until said electrical signal is applied thereto from said electromagnetic release means and generates an inhibition signal after application of said electrical signal;

a discharge tube arranged to emit a flash therefrom;

accumulating means for accumulating light emitting energy for said discharge tube;

detecting means for detecting the amount of said light emitting energy accumulated at said accumulating means, said detecting means being arranged to produce a detection signal when the accumulated amount of said energy reaches a predetermined value;

triggering means for enabling said discharge tube to emit a flash in response to the detection signal produced by said detecting means;

control means for bringing about a permissive state to enable said detecting means to produce a detection signal or an inhibitive state to inhibit said detecting means from producing the detection signal, said control means being arranged to bring about the permissive state when a selection signal is applied thereto from said signal generating means and bring about the inhibitive state when an inhibition signal is applied thereto; and

change-over control means for shifting said change-over means to have the exposure signal of said flash photographing exposure computing means applied to said exposure control means in response to the generation of the detection signal of said detecting means when the selection signal is generated by said signal generating means and to have the exposure signal of said natural light photographing exposure computing means applied to said exposure control means when the detection signal is not generated while there is generated said selection signal, said change-over control means further being arranged to hold said change-over means in a shifting state in such a way as to have the exposure signal of said natural light photographing exposure computing means applied to said exposure control means when said inhibition signal is generated by said signal generating means.

4,298,257

DISPLAY DEVICE FOR CAMERA

Shoichi Togo, Fuchu, and Takeshi Miyashita, Yokohama, both of Japan, assignors to Canon Kabushiki Kaisha, Tokyo, Japan

Continuation of Ser. No. 969,685, Dec. 14, 1978, abandoned. This application Sep. 12, 1980, Ser. No. 186,477

Claims priority, application Japan, Dec. 22, 1977, 52-154621

Int. Cl.³ G03B *17/20, 17/36*

U.S. Cl. 354—23 D **7 Claims**

1. A display device for a camera comprising:

(a) a film counter circuit for providing a signal corresponding to camera film frame information;

(b) detection means for detecting an exposure operation and providing a completion signal when the exposure operation is completed; and

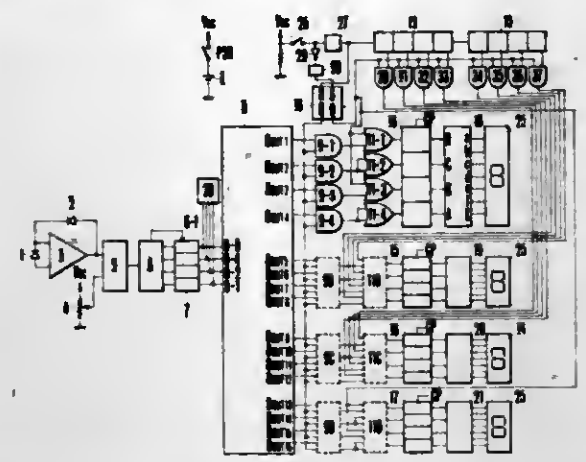

(c) display means coupled to said film counter circuit and said detection means for displaying the film frame information in response to said completion signal.

4,298,258

DISTANCE MEASURING DEVICE

Motonobu Matsuda, Kawachinagano; Tohru Matsui, and Yoshihiro Tanaka, both of Osaka, all of Japan, assignors to Minolta Camera Kabushiki Kaisha, Osaka, Japan

Filed Aug. 23, 1979, Ser. No. 68,969

Claims priority, application Japan, Aug. 28, 1978, 53-104556

Int. Cl.³ G03B *3/10, 7/099*

U.S. Cl. 354—25 **16 Claims**

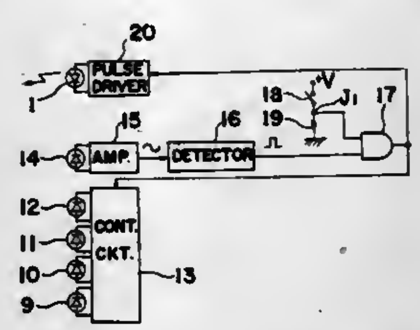

1. A distance measuring device comprising, in combination:

means for projecting a pulsed light beam;

means for receiving the light beam reflected from an object to be measured, said light beam receiving means obtaining information of the zonal distance between the distance measuring device and the object to be measured by utilizing the difference in the incident angle of the reflected light beam;

means for receiving ambient light and for generating a signal indicative of the change in brightness of the ambient light;

means connected to the ambient light receiving means for detecting the moment when the rate of change in brightness of the ambient light is relatively slow, and for generating a timing signal in dependence thereon, said detecting means operatively connected to the light beam projecting means for allowing the projecting means to project the light beam simultaneous with the reception of the timing signal.

4,298,259

FOCUS DETECTING DEVICE FOR PHOTOGRAPHIC CAMERA

Harumi Aoki, Kiyose, and Yoshio Sawada, Tokyo, both of Japan, assignors to Asahi Kogaku Kogyo Kabushiki Kaisha, Tokyo, Japan

Filed Aug. 27, 1979, Ser. No. 70,165

Int. Cl.³ G03B *3/10*

U.S. Cl. 354—25 **4 Claims**

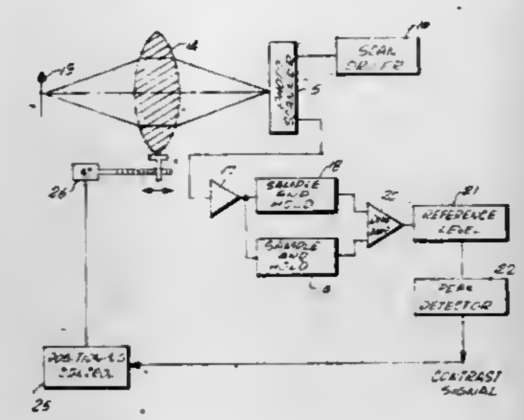

1. A focusing control circuit for a camera, or the like, having an objective lens, comprising:

a self-scanning photoelectric unit including an array of photoelectrical elements lying substantially in the image plane of the lens and means scanning the output of each of the elements in timed sequence to provide a series of pulses in timed sequence whose amplitudes correspond to the level of light on the respective elements, means switching successive pulses of said series alternately to two outputs, means converting the series of pulses at the two outputs to two analog signals, differential means receiving the two continuous analog signals for generating a continuous analog difference signal whose amplitude varies in proportion to the difference in amplitude of the two analog signals, and peak detector means responsive to said continuous difference signal for generating a maximum output when the lens is focused on the image plane.

4,298,260

APPARATUS FOR ENDOSCOPIC PHOTOGRAPHY

Syuichi Takayama, Hachioji, Japan, assignor to Olympus Optical Company Ltd., Japan

Filed Mar. 17, 1980, Ser. No. 130,602

Claims priority, application Japan, Apr. 6, 1979, 54/42254

Int. Cl.³ G03B *7/083;* **A61B** *1/04;* **G03B** *15/03, 17/18*

U.S. Cl. 354—50 **8 Claims**

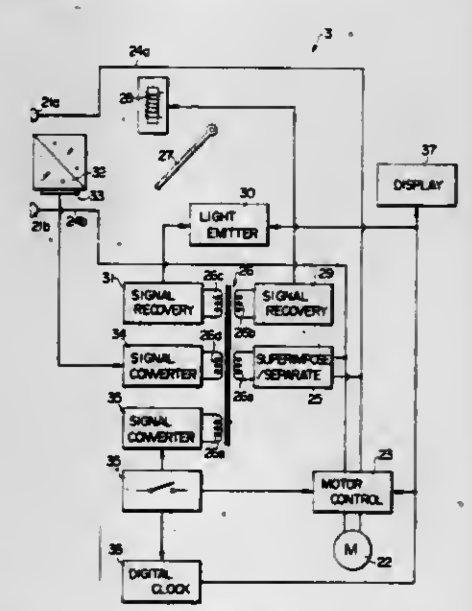

1. An apparatus for endoscopic photography in which a camera is mounted on an endoscope and a light source unit is connected to the endoscope and a film winding d.c. motor located within the camera is interconnected with a d.c. power supply circuit located within said light source unit through d.c. feed lines disposed within said endoscope; said apparatus comprising:

a signal conversion circuit for modulating a high frequency carrier signal with a first signal, and a superimposed circuit for superimposing said modulated high frequency signal on a d.c. signal and for placing said superimposed signal on said d.c. feed line, said signal conversion circuit and said superimposition circuit being located in one of said camera and said light source unit;

a separator circuit coupled to said d.c. feed lines for separating said modulated high frequency signal from said d.c. signal, and a signal recovery circuit for receiving and demodulating said separated modulated high frequency signal so as to recover said first signal, said separator circuit and said signal recovery circuit being disposed in the other of said camera and said light source unit, thereby allowing a communication of said first signal between said camera and said light source unit through the d.c. feed lines.

4,298,261

CAMERA AUTOMATICALLY SYNCHRONIZED WITH AN ELECTRONIC FLASH

Masahiro Kitagawa, Hachioji, Japan, assignor to Olympus Optical Company Ltd., Tokyo, Japan

Filed Oct. 9, 1979, Ser. No. 82,793

Claims priority, application Japan, Oct. 13, 1978, 53-125874

Int. Cl.³ G03B *15/03*

U.S. Cl. 354—139 **8 Claims**

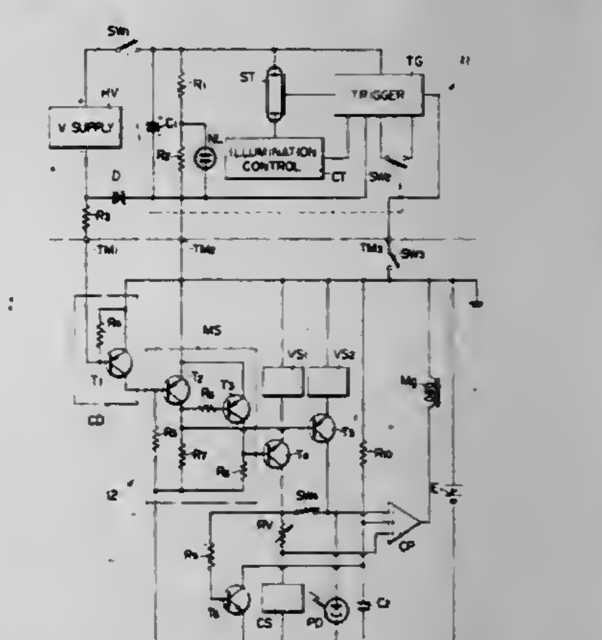

1. Apparatus for automatically synchronizing a camera having an electrical shutter and an automatic photographing mode of operation with an electronic flash energized as a function of accumulated charging current, said apparatus comprising:

switching means for selectively establishing first and second exposure modes for said camera, one of said exposure modes automatically establishing an exposure period for said electrical shutter commensurate with and synchronized to the operation of said electronic flash and another of said exposure modes establishing an exposure period appropriate to an automatic photographing mode of operation of said camera; and

means for detecting the initiation of charging current being applied to a main charging capacitor of said electronic flash and providing an output signal indicative thereof, said switching means being responsive to said output signal to automatically establish one of said first and second exposure modes for said camera.

4,298,262
APERTURE DEVICE OF A LENS CAPABLE OF CLOSE PROXIMITY FLASH PHOTOGRAPHY
Hideyo Nozawa, Ohmiya, and Hideshi Naito, Tokyo, both of Japan, assignors to Nippon Kogaku K.K., Tokyo, Japan
Filed Aug. 28, 1980, Ser. No. 181,978
Claims priority, application Japan, Sep. 14, 1979, 54/117322
Int. Cl.^{3} G03B *15/03, 3/00;* **G02B** *7/02*
U.S. Cl. 354—139 **8 Claims**

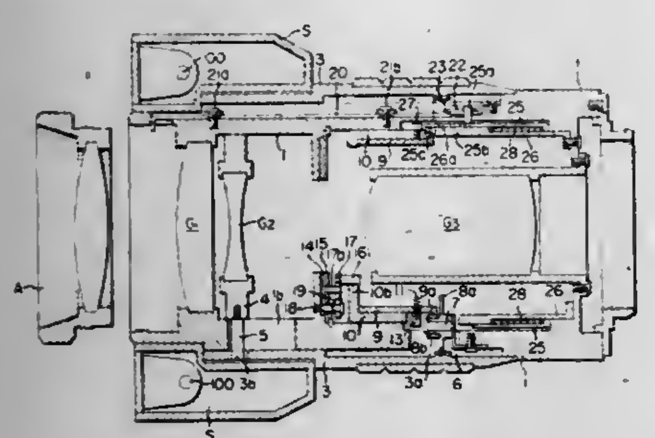

1. In a lens barrel provided with a flash unit for irradiating an object and including a diaphragm for varying the aperture diameter and an optical system having a first focusing mode in which focusing operation can be effected with respect to an object lying within a predetermined distance range and a second focusing mode in which focusing operation can be effected with respect to an object lying at a distance shorter than said predetermined distance range, said flash unit including irradiating means disposed around said lens barrel symmetrically about the optical axis of said optical system, the improvement comprising:
- control means for varying said aperture diameter in accordance with said focusing operation when said optical system is in said first focusing mode; and
- means for holding said aperture diameter in the vicinity of its minimum diameter with respect to said focusing operation when said optical system is in said second focusing mode.

4,298,263
ELECTROMAGNETIC RELEASE DEVICE IN A CAMERA
Hiroshi Hasegawa, Tokyo, Japan, assignor to Nippon Kogaku K.K., Tokyo, Japan
Filed Dec. 18, 1979, Ser. No. 104,841
Claims priority, application Japan, Dec. 28, 1978, 53-178535[U]
Int. Cl.^{3} G03B *9/08*
U.S. Cl. 354—234 **3 Claims**

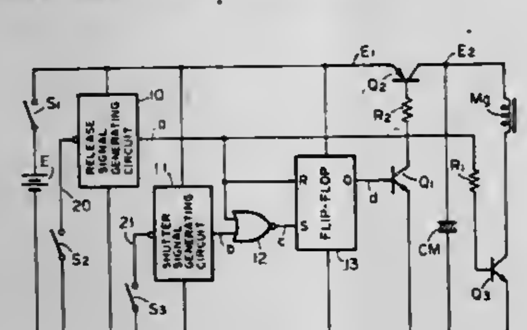

1. An electromagnetic device for effecting exposure in a camera in response to a shutter release operation, comprising:
- a shutter release device, a capacitor, a power source for charging said capacitor, and an electromagnet connected between the terminals of said capacitor for controlling said shutter release device,
- switch means for selectively connecting said capacitor to said power source or said electromagnet, said switch means connecting said capacitor to said electromagnet in response to shutter release operation to thereby form a discharging circuit for said capacitor for a period of time other than the time needed for forming a capacitor charging circuit, or connecting said capacitor to said power source to thereby form the charging circuit for said capacitor, said switch means including:
- a first switch element connected between said power source and said capacitor;
- a second switch element connected between said electromagnet and said capacitor; and
- a control circuit for controlling said first and second switch elements so that only said second switch element is closed in response to shutter release operation and said second switch element is opened after the time needed for keeping the second switch element closed and that said first switch element is closed only for a fixed time other than the time needed for keeping the second switch element closed.

4,298,264
SINGLE-PIVOT TYPE FOCAL-PLANE SHUTTER DRUM MECHANISM
Haruo Ishii, Wako, Japan, assignor to Asahi Kogaku Kogyo Kabushiki Kaisha, Tokyo, Japan
Filed May 2, 1980, Ser. No. 146,917
Claims priority, application Japan, May 25, 1979, 54-64653
Int. Cl.^{3} G03B *9/32*
U.S. Cl. 354—242 **5 Claims**

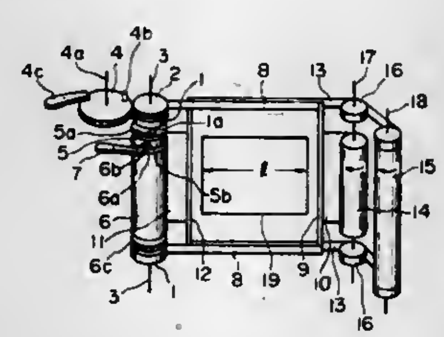

1. A single-pivot type focal-plane shutter mechanism comprising: a top curtain drum having a first protrusion extending therefrom; a bottom curtain drum having a second protrusion extending therefrom, said top and bottom curtain drums being rotatable around a common shaft; and an engaging ring having third and fourth protrusions which are engagable through rotation with said first and second protrusions on said top and bottom curtain drums, said engaging ring being rotatably mounted on said common shaft.

4,298,265
LIGHT-INTERCEPTING DEVICE IN A CAMERA
Etsuo Tanaka, Tokyo, and Hironobu Kato, Urawa, both of Japan, assignors to Nippon Kogaku K.K., Tokyo, Japan
Filed May 23, 1980, Ser. No. 152,603
Claims priority, application Japan, Jun. 2, 1979, 54/69082
Int. Cl.^{3} G03B *9/40*
U.S. Cl. 354—246 **4 Claims**

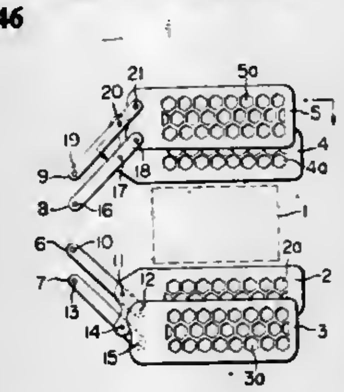

1. In a light-intercepting device in a camera including a plurality of flat light-intercepting vanes disposed on a light-intercepting plane crossing an optical path, said light-intercepting vanes being driven so as to be parallel-moved relative to each other on said light-intercepting plane to thereby control the quantity of light passed therethrough, the improvement of said light-intercepting vanes comprising:
- a substrate formed of titanium or a titanium alloy; and
- a hardened layer of titanium compound formed on the surface of said substrate.

4,298,266
INTERCHANGEABLE LENS FOR CAMERAS, SUCH AS REFLEX CAMERAS
Christian Ludwig, Dreissentalstr. 54, 7082 Oberkochen, Fed. Rep. of Germany
Filed Oct. 6, 1980, Ser. No. 194,640
Claims priority, application Fed. Rep. of Germany, Oct. 13, 1979, 2941601
Int. Cl.^{3} G03B *17/00, 9/00*
U.S. Cl. 354—286 **7 Claims**

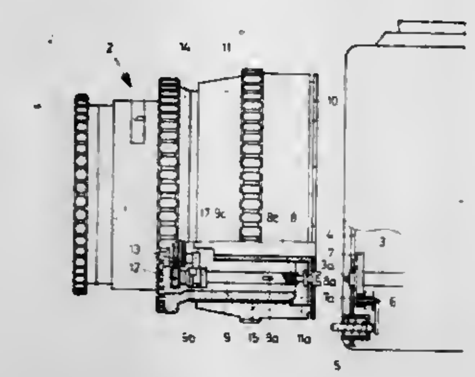

5. Interchangeable lens apparatus for attachment to cameras, such as reflex cameras, comprising
- a lens assembly having a shutter portion arranged thereon for axial movement relative to the housing of the camera and adapted for accommodating a spring driven shutter sector drive,
- cocking means arranged in the shutter portion and adapted for cocking the spring driven shutter sector drive,
- a composite telescoping force transmission shaft operatively arranged for forward and reverse rotational movement as a cocking and release control means for the cocking means and including a cocking means associated first part and a camera drive associated second part, the first part being arranged for axial telescoping movement relative to the second part,
- one telescoping shaft end comprising the end of the first part telescopingly remote from the second part and being drivably connected to the cocking means for cocking the spring driven shutter sector drive; and the opposite telescoping shaft end comprising the end of the second part telescoping remote from the first part and being adapted, upon interchangeable attachment of the lens assembly to the camera, for positive operative rotational engagement with a cocking button controllable drive shaft disposed in the adjacent portion of the camera, and
- releasable lock bolt means operatively arranged for releasably locking the telescoping shaft,
- the first part of the telescoping shaft comprising two mutually rotatable sub-parts including a lockable release sub-part and a cocking sub-part limitedly rotatable relative to each other and operatively arranged as coupling members for forward rotation in a shutter cocking direction and for reverse rotation in a shutter releasing direction,
- the cocking sub-part having forward engaging means for operatively engaging the release sub-part in the forward shutter cocking direction of rotation of the cocking sub-part to rotate the release sub-part therewith during the cocking movement of the telescoping shaft, and the release sub-part having bolt receiving means arranged for operatively receiving the lock bolt means for releasably locking the release sub-part at the end of such cocking movement, and
- the cocking sub-part further having release effecting means for operatively releasing the lock bolt means from the release sub-part in the initial movement phase of the reverse shutter releasing direction of rotation of the cocking sub-part, and the release sub-part further having reverse engaging means for operatively engaging the cocking sub-part to rotate the cocking sub-part therewith during the remaining movement phase of the sub-parts in the reverse shutter releasing direction of rotation.

4,298,267
PROCESSING ROLLER CLEANER
Harvey S. Friedman, Sudbury, Mass., assignor to Polaroid Corporation, Cambridge, Mass.
Filed Jun. 24, 1980, Ser. No. 162,408
Int. Cl.^{3} G03D *5/02*
U.S. Cl. 354—304 **4 Claims**

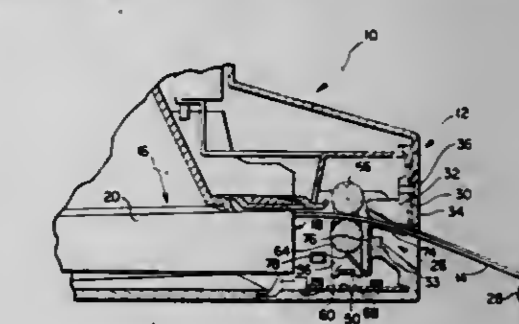

1. Apparatus for spreading a processing liquid across an exposed area of a photographic film unit so as to initiate the formation of a visible image therein while simultaneously advancing the film unit from its exposure position, said apparatus comprising:
- a housing;
- means mounted within said housing for supporting first and second elongate rollers in juxtaposed relation such that their peripheral surfaces define a pressure-generating gap into which an exposed film unit is adapted to be advanced;
- first and second elongate rollers coupled to said supporting means in juxtaposed relation for rotation about their longitudinal axes, said first and second elongate rollers being adapted to spread a processing liquid across the width of an exposed film unit, as it passes therebetween, so as to initiate the formation of a visible image therein;
- cleaning means mounted adjacent said first elongate roller and engageable with the peripheral surface of said first roller for removing particulate material from said peripheral surface as said first elongate roller is being rotated about its longitudinal axis; and
- said supporting means includes means for supporting said first elongate roller for movement into engagement with said cleaning means as an exposed film unit is moved between said first and second elongate rollers, and out of engagement with said cleaning means as the film unit moves out from between said first and second elongate rollers.

4,298,268
METHOD AND DEVICE FOR CLEANING PHOTOSENSITIVE SCREEN IN AN IMAGE FORMING APPARATUS

Tadashi Sato, 24-20, Nishimachi 4-chome, Kokubunji-shi, Tokyo, and Keiji Tanaka, 506, Kuji, Takatsu-ku, Kawasaki-shi, Kanagawa-ken, both of Japan
Continuation of Ser. No. 549,437, Feb. 12, 1975, abandoned. This application Sep. 29, 1978, Ser. No. 947,198
Claims priority, application Japan, Feb. 25, 1974, 49-22149; Jul. 27, 1974, 49-86379
Int. Cl.³ G03G *15/00*
U.S. Cl. 355—3 SC **4 Claims**

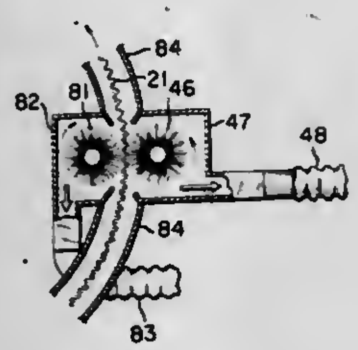

1. A method for protecting an endlessly movable photosensitive screen from an accumulation of dust, wherein the screen has a multitude of tiny openings for use in forming an image by modulating ion current and wherein the screen is disposed within a housing which also includes latent image forming means, and developing means for developing an image formed by modulating ion current, said method comprising:
substantially isolating the endlessly movable photosensitive screen from the ambient air in the housing with wall means disposed at least outside of the screen, but without interfering with its movement or with latent image formation, to substantially cover the entire screen.

4,298,269
RECORDABLE READER PRINTER AND ELECTROSTATIC COPIER

Tomohisa Yoshimaru; Yasuhiro Sato, both of Yokohama, and Mitsuo Yamashita, Tokyo, all of Japan, assignors to Tokyo Shibaura Denki Kabushiki Kaisha, Kawasaki, Japan
Filed Sep. 18, 1979, Ser. No. 76,728
Claims priority, application Japan, Sep. 22, 1978, 53-117045
Int. Cl.³ G03G *15/00*
U.S. Cl. 355—3 R **6 Claims**

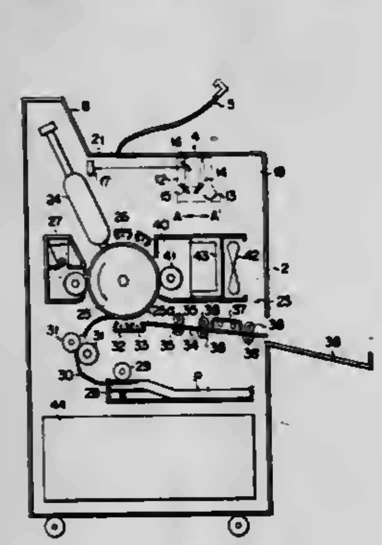

1. A recordable reader printer comprising:
a scanner for optically scanning each of a plurality of documents and producing document image information for the images of said individual documents;
means for producing retrieval code information respectively corresponding to said documents;
a recording/reproducing device including means for recording in a recording medium the document image information and retrieval code information corresponding to said documents respectively from said scanner and said retrieval code information producing means and a means for reproducing the recorded information from said recording medium;
means for inputting a retrieval code information corresponding to desired one of said image information for said documents;
means for detecting from said recording medium a document image information corresponding to the retrieval code information inputted by means of said retrieval code information input means and giving said recording/reproducing device a command for reproduction to read out the detected document image information from said recording medium; and
an electrographic printer including a means for converting at least the document image information reproduced by said recording/reproducing device into an optical image corresponding to the image of said document and a means for converting the optical image into a printed image;
said recording/reproducing device including means for reproducing the document image information and corresponding retrieval code information immediately when said information is recorded and supplying said reproduced information to said electrographic printer.

4,298,270
ELECTROGRAPHIC APPARATUS

Hiroshi Tsuda, Mitaka; Kiyoshi Miyashita; Masaji Nishikawa, both of Hachioji; Akira Shimizu, Fuchu, and Muneo Kasuga, Hachioji, all of Japan, assignors to Olympus Optical Company Limited, Tokyo, Japan
Filed Jan. 29, 1980, Ser. No. 116,391
Claims priority, application Japan, Feb. 2, 1979, 54/11134
Int. Cl.³ G03G *15/00*
U.S. Cl. 355—3 SH **19 Claims**

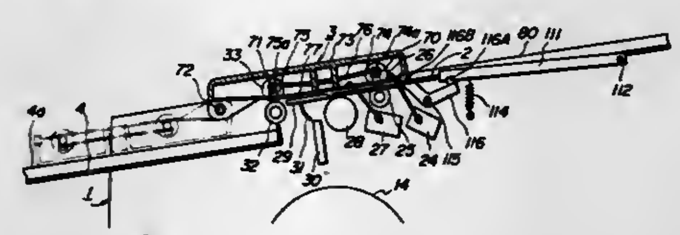

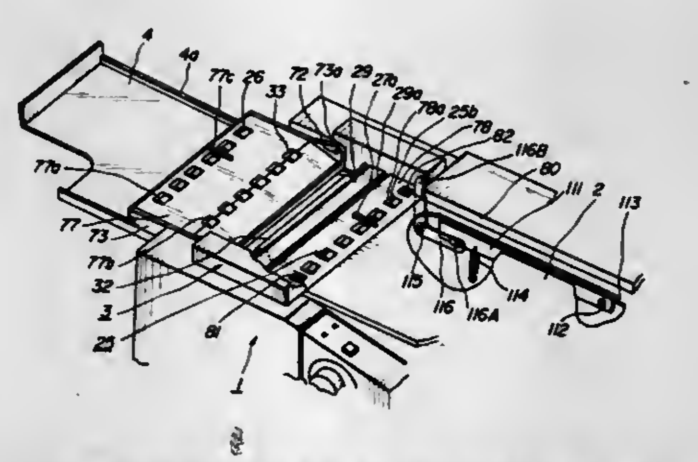

1. An electrographic apparatus comprising a main body with a manuscript carriage table; a manuscript discharge tray detachably mounted on said main body; a slit light exposure portion mounted on said main body and interposed between said manuscript carriage table and said manuscript discharge tray, said slit light exposure portion defining a substantially rectilinear manuscript feed path and projecting a manuscript image therethrough; a manuscript feed mechanism including upper and lower feed mechanisms arranged above and below said manuscript feed path at said slit light exposure portion, said upper feed mechanism being arranged movably with respect to said lower feed mechanism; a photosensitive body for memorizing said manuscript image projected through said slit light exposure portion thereon as an electrostatic latent image; a sheet manuscript edge guide for determining a position of a side edge of a sheet manuscript; a thick manuscript edge guide for determining a position of a side edge of a thick manuscript, said thick manuscript edge guide being arranged outside said sheet manuscript edge guide viewed in a direction perpendicular to said manuscript feed path; and a means for automatically changing said two edge guides in response to a movement of said upper feed mechanism with respect to said lower feed mechanism; the apparatus being constructed and arranged such that in the case of obtaining copies of a sheet manuscript said sheet manuscript is fed by said manuscript feed mechanism under a condition that said upper feed mechanism is mounted on said lower feed mechanism and in the case of obtaining copies of a thick manuscript a thick manuscript carriage on which is disposed said thick manuscript is fed along the manuscript carriage table by said lower feed mechanism under a condition that said upper feed mechanism is moved from said lower feed mechanism.

4,298,271
SCANNING AND PROJECTING DEVICE

Muneharu Sugiura, Tokyo; Kazuo Minoura, Yokohama, and Setsuo Minami, Kawasaki, all of Japan, assignors to Canon Kabushiki Kaisha, Tokyo, Japan
Filed Jul. 2, 1979, Ser. No. 53,777
Claims priority, application Japan, Jul. 6, 1978, 53-82279
Int. Cl.³ G03G *15/28*; G03B *27/70, 27/68*
U.S. Cl. 355—8 **12 Claims**

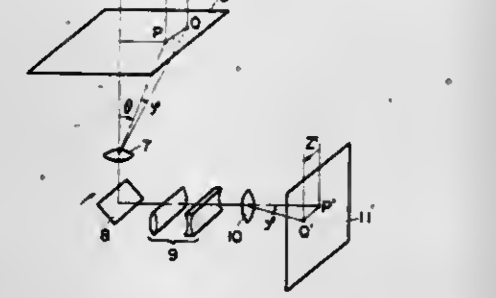

11. An optical system for reproduction, comprising:
(a) a rotationally symmetrical first image forming optical system;
(b) a flat image original plane disposed on one focal plane of said first image forming optical system for subjection to slit-scanning;
(c) a deflector to deflect in a predetermined direction a light beam from said image original plane and which passes through said first image forming optical system, said deflector performing its deflecting function by a deflecting and reflecting surface which rotates about a predetermined axis;
(d) a second image forming optical system to collect the light beam from said deflector;
(e) a photosensitive medium disposed at a position where the light beam is collected by said second image forming optical system; and
(f) an anamorphic optical system interposed between said image original plane and the photosensitive drum, and provided with means for making the image forming magnification the same in both the scanning direction and the direction orthogonal thereto, and said second image forming optical system including means for maintaining constant the image forming magnification which would otherwise change with the change in rotational angle of the deflector.

4,298,272
DAYLIGHT REPROGRAPHIC CAMERA

Emile F. Stievenart, Hoboken, and Hugo F. Deconinck, Deurne-Zuid, both of Belgium, assignors to AGFA-Gevaert N.V., Mortsel, Belgium
Filed Nov. 21, 1979, Ser. No. 96,497
Claims priority, application United Kingdom, Nov. 23, 1978, 45765/78
Int. Cl.³ G03B *29/00*
U.S. Cl. 355—28 **11 Claims**

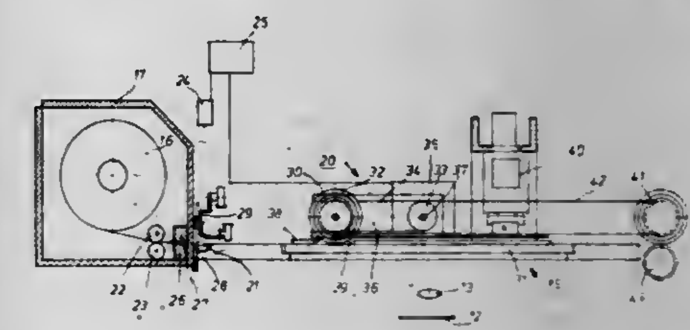

1. A reprographic camera for waste-free exposure of photosensitive material under daylight conditions comprising a camera body having a fixed defined image plane and a light-tight casing mounted on its rear-side spaced from said image plane, a supply roll of a continuous web of photosensitive material situated within said casing, dispensing means associated with said casing for advancing outside said casing a selected variable length of the web of photosensitive material from said supply roll, severing means situated between said dispensing means and said image plane for separating from the material web the thus-advanced adjustable length thereof, transport means downstream of said severing means for transporting said severed variable length of material to an exposure position within the image plane of said reprographic camera, separate time-controlled synchronous motors for operating said dispensing means and transport means respectively at substantially fixed rates, and control means for energizing said synchronous motors for lengths of time which are a function of the selected variable length of material to be exposed.

4,298,273
PROJECTION ALIGNER AND METHOD OF POSITIONING A WAFER

Hiroshi Nishizuka, Kodaira; Susumu Komoriya, Tachikawa; Koyo Morita, Higashimurayama, and Takayoshi Osakaya, Kodaira, all of Japan, assignors to Hitachi, Ltd., Tokyo, Japan
Filed Oct. 22, 1979, Ser. No. 87,387
Claims priority, application Japan, Oct. 20, 1978, 53-128367; Jan. 22, 1979, 54-78213; Jul. 11, 1979, 54-86926
Int. Cl.³ G03B *27/52*
U.S. Cl. 355—61 **29 Claims**

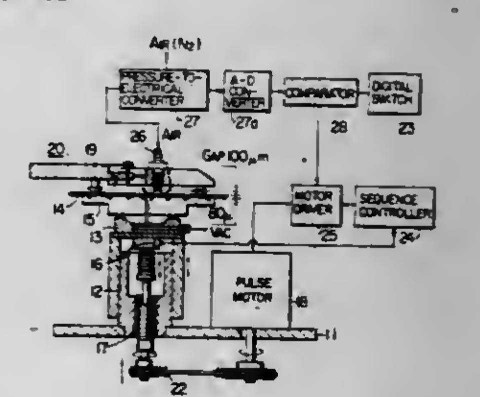

1. A projection aligner comprising an optical system for projecting a radiation pattern onto a surface of a semiconductor wafer and wafer positioning means for positioning and

holding said wafer at a focal plane of said optical system, said wafer positioning means comprising:

leveling means for effecting leveling of said wafer by moving upwardly or downwardly a wafer chuck supporting said wafer thereon,

reference level means including a plurality of leveling pads defining a reference plane and adapted to press said wafer rested on said wafer chuck against said reference plane to thereby establish parallelism of said wafer to said reference plane,

measuring means provided at least at a position on said reference plane in opposite and spaced relation with the surface of said wafer for measuring the distance of said wafer surface from said reference plane, and

drive control means for controlling operation of said leveling means in response to an output signal from said measuring means to thereby stop movement of said wafer chuck when a measured value represented by said output signal has attained a predetermined value corresponding to said focal plane of said optical system.

27. A method of positioning a wafer in a projection aligner including an optical system for projecting a radiation pattern onto a semiconductor wafer, comprising: for setting the wafer surface at a focal plane of said optical system, measuring concavity and convexity of said wafer surface; determining an imaginary plane on the basis of the results of said measurement at which the area of said wafer surface lying within the focal depth of said optical system will take a maximum when the imaginary plane is positioned in said focal plane; and displacing said wafer so that said imaginary plane coincides with said focal plane of said optical system.

4,298,274

VARIABLE DENSITY FILTER FOR A MULTI-MAGNIFICATION COPYING DEVICE

James D. Rees, 5880 Palmyra Rd., Pittsford, N.Y. 14530; Kenneth W. Altfather, Jr., 9 Timway Ct., Fairport, N.Y. 14450; William L. Lama, 753 Blue Creek Dr., Webster, N.Y. 14580, and Donna U. Ozern, Shadow La., Amherst, N.H. 03031

Filed Jan. 7, 1980, Ser. No. 110,068
Int. Cl.³ G03B *27/72*
U.S. Cl. 355—71 5 Claims

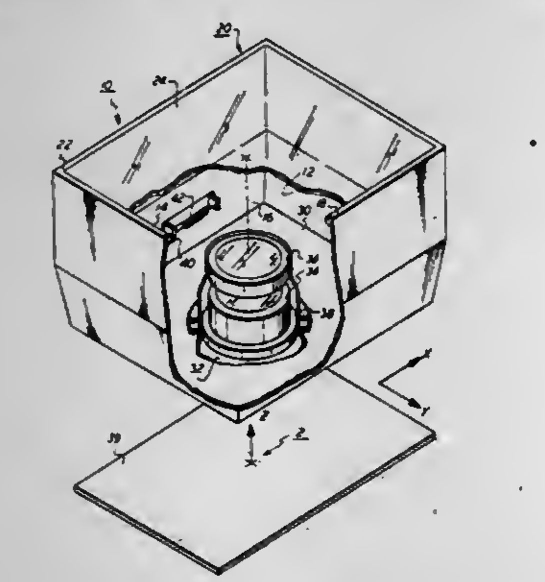

1. A full frame, flash exposure optical system for a copier having magnification capabilities, including:

an object plane for supporting a document to be reproduced onto an imaging plane;

an illumination source for illuminating said object plane;

a lens for projecting an image of said object onto an imaging plane;

means for compensating for circularly symmetric exposure variation at said image plane said means comprising a variable transmission filter mounted in a fixed relation to said lens and having its center on the lens optical axis, said filter having an area of varying density which provides, for light passing therethrough, a radially symmetrical light transmission profile which is minimum at the center and which increases with distance from the center;

means for changing the magnification of said optical system said means at least effecting a translation of said lens and filter to maintain document registration;

wherein said filter maintains its position on the lens optical axis at any magnification position and compensates for said exposure variations throughout the magnification range.

4,298,275

RADIALLY VARYING TRANSMISSION FILTER FOR WIDE ANGLE COPYING DEVICE

James A. Critchlow, Macedon, N.Y., and Donna U. Ozern, Amherst, N.H., assignors to Xerox Corporation, Stamford, Conn.

Filed Jan. 7, 1980, Ser. No. 110,062
Int. Cl.³ G03B *27/72*
U.S. Cl. 355—71 6 Claims

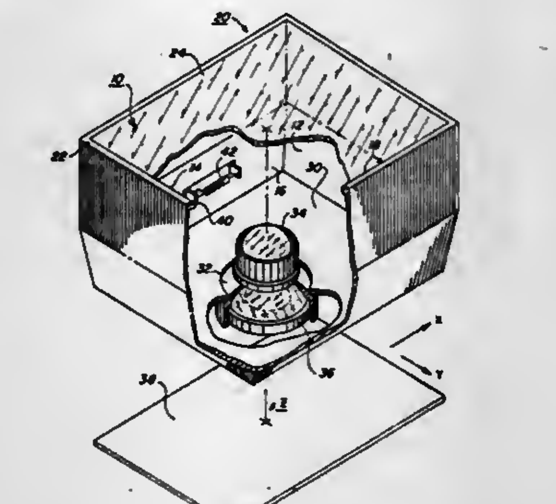

1. A full frame, wide angle exposure system for a copier wherein a platen is substantially uniformly illuminated by an illumination source said system including:

a lens for projecting an image of a document placed on said platen onto an imaging plane; and

a relative illumination filter positioned adjacent said lens and on the optical axis of said lens, said filter consisting of a disc having a central circular area of varying density which provides, for light passing therethrough, a symmetrical light transmission profile which is minimum at the center and which generally increases radially outward, said disc further having a transparent annular area encompassed by the outer edge of said central area and the outer edge of said disc, said transparent area providing maximum transmission light therethrough whereby said filter provides exposure compensation at said imaging plane for the effect of both $\cos^4$ variation as well as transmission variations and exit pupil distoration of said lens.

4,298,276

CASSETTE TYPE ROLL SHEET FEEDING APPARATUS

Hiroshi Tsuda, Mitaka; Kiyoshi Miyashita, Hachioji; Katsuhiko Kimura, Hachioji; Heihachi Arima, Hachioji, and Osamu Ishimoto, Hachioji, all of Japan, assignors to Olympus Optical Company Limited, Tokyo, Japan

Division of Ser. No. 918,822, Jun. 22, 1978, Pat. No. 4,218,135. This application Dec. 10, 1979, Ser. No. 102,823
Claims priority, application Japan, Jun. 24, 1977, 52-74967; Jun. 24, 1977, 52-74968
Int. Cl.³ G03B *27/58*
U.S. Cl. 355—72 3 Claims

1. A cassette type roll sheet feeding apparatus for feeding a

roll sheet from a cassette after the roll sheet cassette is removably loaded in a copying machine body, comprising: a sheet guide provided in said roll sheet cassette disposed near a sheet outlet and having at least one opening; means for assisting the feeding of said roll sheet; said means are provided in the cassette at such a position that it faces the opening formed in said sheet guide to assist the feeding of the roll sheet through the outlet, said means being urged against the sheet guide through the leading end of roll sheet; and a sheet feed roller provided in

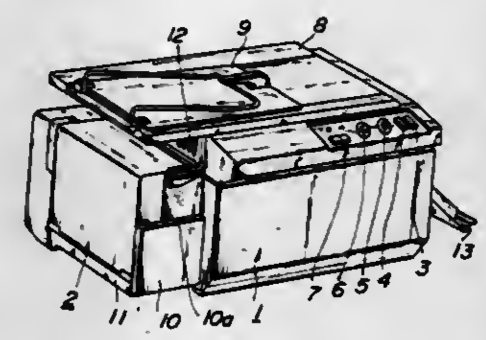

said copying machine body, said roller being adapted to project through said opening in the sheet guide, to hold a leading end portion of said sheet in cooperation with said means for assisting the feeding of the sheet from the outlet, when said cassette is mounted in the copying machine body; whereby, said sheet is held at the leading end portion thereof between said means for assisting the feeding of the sheet and said sheet guide, when said cassette is removed from the copying machine body.

4,298,277

GROOVED VACUUM BELT DOCUMENT HANDLING SYSTEM

Morton Silverberg, Rochester, N.Y., assignor to Xerox Corporation, Stamford, Conn.

Filed Jan. 10, 1980, Ser. No. 111,051
Int. Cl.³ G03B *27/62, 27/64*
U.S. Cl. 355—76 10 Claims

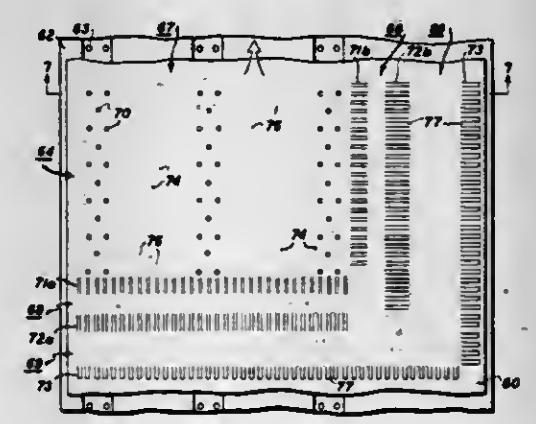

1. For a document handling apparatus in which documents are moved with a vacuum belt to an imaging station of a copier, where the documents are imaged against a light reflective document imaging surface on a first side of said belt, and in which the documents are attracted to said first side of said belt by an air flow applied from a vacuum manifold at the second side of said belt through multiple vacuum apertures extending through the belt and opening on said first side, the improvement in said vacuum belt wherein:

said openings of said vacuum apertures are limited to areas of said first side of said belt coverable by the smallest document to be imaged thereagainst, to avoid show-around exposure of said apertures during said document imaging,

said first side of said belt has a multiplicity of vacuum channels recessed slightly below said light reflective document imaging surface thereof,

said vacuum channels having sufficiently gently sloping walls to avoid imaged edge shadows thereof at said imaging station and light reflective characteristics substantially equal to or better than said document imaging surface to avoid show-around imaging of said channels,

said openings of said vacuum apertures at said first side of said belt are recessed within said vacuum channels substantially spaced below said document imaging surface, and said vacuum channels pneumatically connect with said vacuum apertures and extend unapertured outwardly from and beyond said vacuum apertures over said document imaging surface of said belt, and

said vacuum apertures are sufficiently large to provide low impedance relatively unrestricted airflows therethrough into said vacuum channels, to provide airflows along said vacuum channels into said vacuum apertures from the direction of the edges of a document, and to thereby generate vacuum holddown forces along said channels between said document and said belt, whereby different sizes of documents may be vacuum retained on said document imaging surface without either said vacuum apertures or said vacuum channels being substantially imagable.

4,298,278

DEVICE FOR DETACHABLY ATTACHING A MASTER SHEET TO A DRUM

Hiroshi Katakura, Fuchu, and Takashi Tamura, Higashimine, both of Japan, assignors to Konishiroku Photo Industry Co., Ltd., Tokyo, Japan

Filed Feb. 22, 1980, Ser. No. 123,837
Claims priority, application Japan, Feb. 25, 1979, 54-21251
Int. Cl.³ G03B *27/04*
U.S. Cl. 355—85 2 Claims

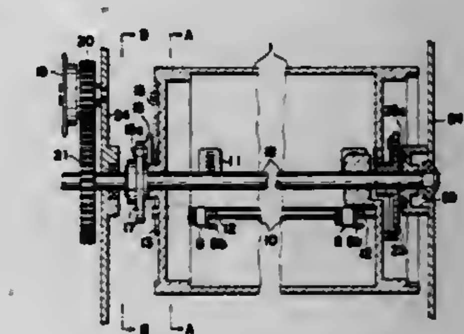

1. In a copying machine having a drum of the type in which a master sheet is detachably attached to the periphery of the drum, the machine which comprising; a rotary shaft connected to a drive member for supporting the drum; clutch means being provided between the drum and the drive member for rotating the drum so that the drum and the drive member undergo displacement relative to each other; a pair of fastening members mounted on the drum, movably, for attaching both ends of the master sheet onto the drum; wherein at least one of fastening members is moved from a fastening condition to removing condition by the relative displacement of the drum and the drive member.

4,298,279

COPYING APPARATUS HAVING AN ORIGINAL FEEDING MECHANISM

Shigeru Yoshimura, Yokohama; Akihiro Nomura, Kawasaki, and Kimiaki Hayakawa, Tokyo, all of Japan, assignors to Canon Kabushiki Kaisha, Tokyo, Japan

Filed May 20, 1980, Ser. No. 151,675
Claims priority, application Japan, Jun. 1, 1979, 54-68563; Jun. 8, 1979, 54-72610; Jun. 26, 1979, 54-80306; Jun. 27, 1979, 54-82084; Jun. 28, 1979, 54-82472
Int. Cl.³ G03B *15/00*
U.S. Cl. 355—133 5 Claims

1. A copying apparatus having an original feeding mechanism having:

an original supporting member for supporting originals thereon;
original feeding means for conveying the originals onto the surface of said original supporting member;
discharging means for imparting a discharging action to said

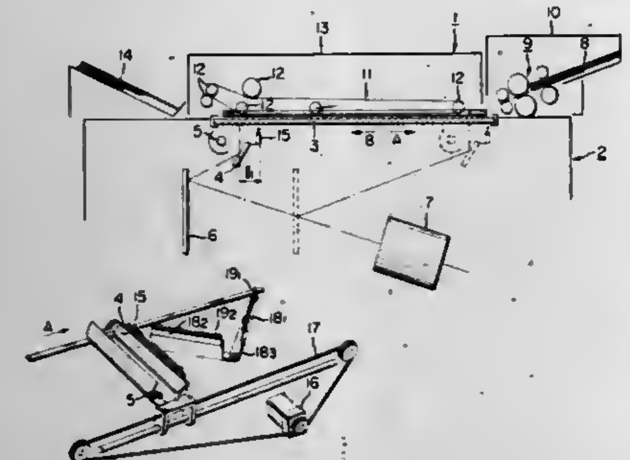

original supporting member from that side thereof opposite to the original supporting side of said original supporting member to discharge the surface of said original supporting member; and
optical scanning means for optically scanning the original on said original supporting member.

4,298,280
INFRARED RADAR SYSTEM
Robert C. Harney, Acton, Mass., assignor to Massachusetts Institute of Technology, Cambridge, Mass.
Filed Sep. 25, 1979, Ser. No. 78,791
Int. Cl.[3] G01C *3/08;* G01P *3/36;* H01J *31/49*
U.S. Cl. 356—5 **13 Claims**

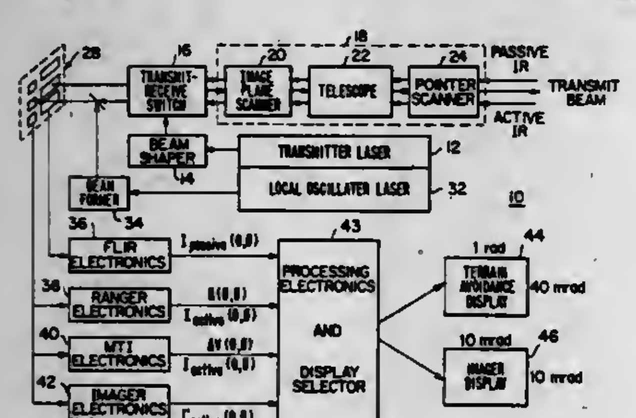

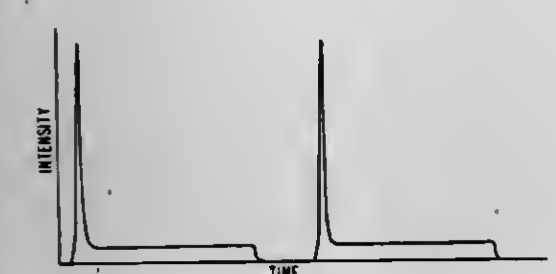

1. An infrared radar system, comprising:
A. laser means for generating at least one infrared transmit pulse having a spike portion and a CW portion,
B. means for transmitting said pulse to a target scene,
C. receiver means for receiving reflections of said transmitted pulse reflected from objects in said scene, and for generating first signals representative of the received reflections of said spike portion, and second signals representative of the received reflection of said CW portion,
D. first processing means responsive to said first signals for generating data representative of the range of objects in said scene,
E. second processing means responsive to said second signals for generating data representative of the velocity of objects in said scene.

4,298,281
LASER SYSTEM FOR ALIGNING CONVEYOR ROLLS
Richard D. Schave, Perrysburg, Ohio, assignor to Libbey-Owens-Ford Company, Toledo, Ohio
Filed Jul. 16, 1979, Ser. No. 57,905
Int. Cl.[3] G01B *11/27*
U.S. Cl. 356—138 **7 Claims**

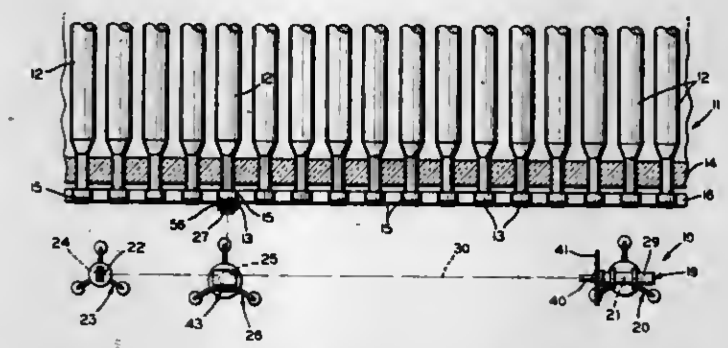

1. A method of aligning each of a plurality of transversely extending, longitudinally spaced rotating conveyor rolls comprising the steps of:
(a) establishing a longitudinally extending reference plane containing the axes of the conveyor rolls:
(b) producing an incident light beam extending longitudinally along a path in said reference plane in parallel relationship to the centerline of the conveyor;
(c) first bending said incident light beam at right anges toward the end of one of said conveyor rolls;
(d) reflecting said light beam from a plane substantially perpendicular to the longitudinal axis of said one rotating conveyor roll on the end of said roll and rotating therewith back to the source of said incident light beam; and
(e) intercepting said reflected light beam on a target located at and surrounding said source and observing the angular relationship of said roll axis with said incident light beam from the position of impingement of said reflected beam on said target relative to said source.

4,298,282
GAUGE FOR MEASURING CARPET SOILING
Keith Williams, 1820 H St., Fresno, Calif. 93721
Filed May 9, 1980, Ser. No. 148,137
Int. Cl.[3] G01N *21/88*
U.S. Cl. 356—237 **7 Claims**

1. A soil gauge for measuring the relative amount of soiling of a carpet, said soil gauge comprising:
a transparent strip;
a plurality of viewing areas located in said strip, at least one of said viewing areas being covered with a multiplicity of small opaque marks positioned in said viewing area with adjacent viewing areas having an increasing coverage

whereby when a sample of unsoiled carpet is viewed through one of said viewing areas and matched with the

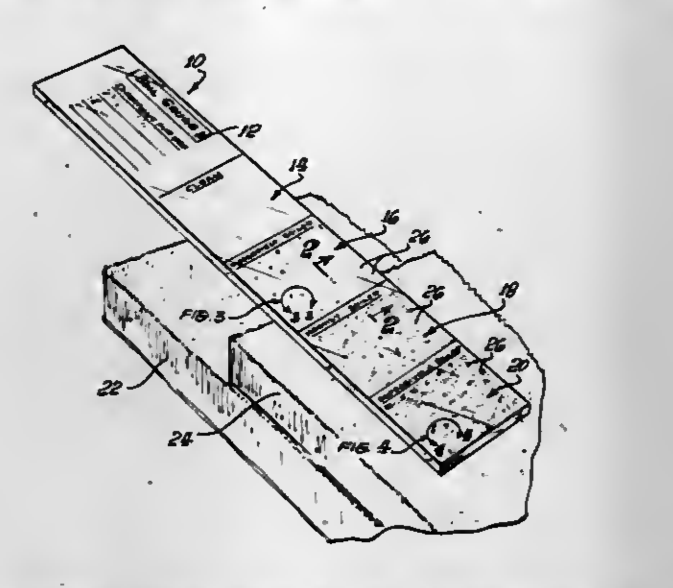

sample of soiled carpet, a relative measurement of degree of soiling is obtained.

4,298,283
INTERFEROMETRIC MEASURING METHOD
Geunter Makosch, and Bernhard Solf, both of Sindelfingen, Fed. Rep. of Germany, assignors to International Business Machines Corporation, Armonk, N.Y.
Filed Nov. 13, 1979, Ser. No. 93,642
Claims priority, application Fed. Rep. of Germany, Nov. 30, 1978, 2851750
Int. Cl.[3] G01B *9/02*
U.S. Cl. 356—351 **17 Claims**

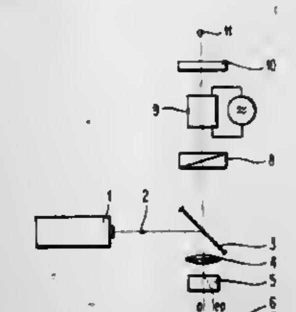

1. A interferometric method for analyzing the planarity of a surface, comprising
(a) generating two discrete coherent light beams each having at least one wavelength in common and polarized in different directions relative to each other,
(b) reflecting said beams from spaced surface portions into corresponding return beams,
(c) shifting the phase relation of the return beams to compensate for any phase shift resulting on reflection from said surface portions, and
(d) detecting said compensation for each common wavelength constituent as a function of the variations in the planarity of said surface.

4,298,284
METHOD AND APPARATUS FOR MEASURING MAGNETOOPTIC ANISOTROPY
Manabu Yamamoto, Odawara; Seiichi Murayama, Kokubunji; Masaru Ito, Kodaira, and Kounosuke Oishi, Mito, all of Japan, assignors to Hitachi, Ltd., Tokyo, Japan
Filed Dec. 14, 1978, Ser. No. 969,268
Claims priority, application Japan, Dec. 14, 1977, 52-166953[U]
Int. Cl.[3] G01N *21/21*
U.S. Cl. 356—368 **2 Claims**

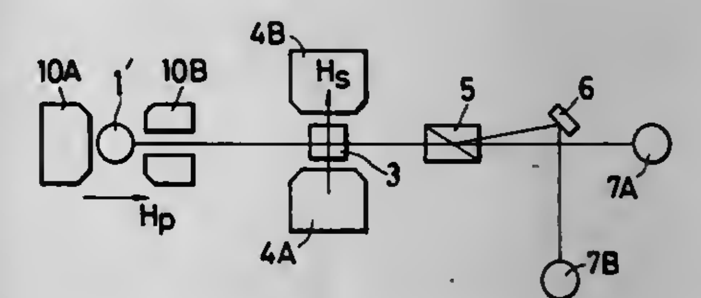

1. A apparatus for providing a measure of the concentration of a sample element by magnetooptic effect comprising:
means for providing a sample element on an optical path, said element having a given atomic resonance frequency,
means for subjecting said sample to a magnetic field transverse to said optical path,
means for supplying and directing at said sample and along said optical path a beam of light,
a polarizer on said optical path positioned to interrupt the emergent beam from said sample, and
means to detect said emergent beam after passing through said polarizer, the improvement in said beam supplying means comprising;
a light source radiating elliptically or circularly polarized light at a frequency shifted from the atomic resonance frequency of said element.

4,298,285
APPARATUS FOR MEASURING CONTOUR CONFIGURATION OF ARTICLES
Isao Ito, Nagoya, Japan, assignor to NGK Insulators, Ltd., Nagoya, Japan
Filed Jun. 15, 1979, Ser. No. 48,811
Claims priority, application Japan, Sep. 11, 1978, 53-110600
Int. Cl.[3] G01B *11/24, 11/00*
U.S. Cl. 356—376 **3 Claims**

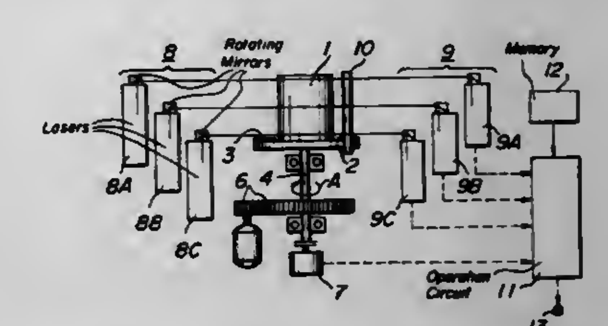

1. An apparatus for measuring contour configuration of articles comprising;
a turn table on which the article to be measured is placed;
a detector for detecting a rotational angle of said turn table to produce a rotational angle signal;
an edge detector having a plurality of pairs of parallel light projecting members for projecting a parallel light onto the article and parallel light receiving members for receiving a part of the parallel light which is not shielded or cut by the article to produce an edge position signal, said parallel light projecting and receiving members being arranged on

respective sides of the turn table and arranged at different positions along the edge of article to be detected;

a memory for storing a standard edge position signal which corresponds to a standard article having given contour configuration and the maximum permissible tolerance of a deviation of a detected edge position signal from said standard edge position signal; and

an operation circuit for receiving said rotational angle signal, the edge position signal and the standard edge position signal and producing a signal which represents a deviation in the contour configuration of the article to be measured from the standard article by comparing the detected deviation with said maximum permissible tolerance, said operation circuit further determining the deviation in center position of the article with respect to the turn table and compensating for said center position deviation.

4,298,286
MEASURING APPARATUS
Carl W. Maxey, Corvallis, Oreg., and Warren Leyde, Seattle, Wash., assignors to The Carl Maxey Company, Corvallis, Oreg.
Filed Jun. 2, 1980, Ser. No. 155,500
Int. Cl.³ G01B *11/06*
U.S. Cl. 356—381 5 Claims

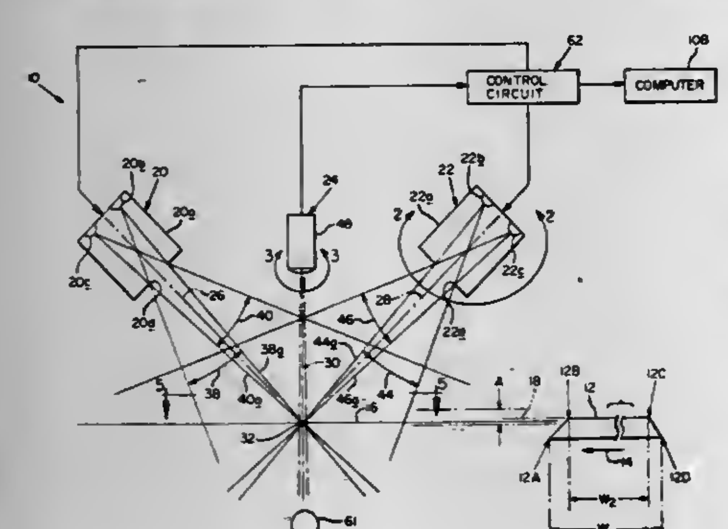

2. Apparatus for measuring, within a definable selectively variable range, the distance between an object's surface and a datum plane, said apparatus comprising,

two pairs of illumination sources, each pair being oriented to project beams of light toward a common side of said plane, with one beam projected by each pair having a defined lower surface, and the other beam projected by each pair having a defined upper surface, all of said surfaces intersecting said plane generally along a common line within the plane,

reflected illumination sensing means oriented to view said common side of said plane, and having a sensing axis which intersects said common line, said sensing means producing a signal related to the level of light reflected thereto from an object's surface located along said axis, and

control circuitry operatively connected to said sources and to said sensing means, operable, with respect to said sources, to energize those sources projecting beams having defined lower surfaces alternately with the other sources, and with respect to said sensing means, to generate a signal indicative of the distance, if any, within said selected range, of such an object's surface from said plane, and of the side of said plane on which such surface is located.

4,298,287
CENTER DRAFT ASPHALTIC CONCRETE DRUM MIXER
Louis N. McCarter, III, Malvern; W. Robert Deemer, Norristown; Robert G. Meeker, Lansdale, all of Pa.; Harry B. Weaver, Goshen, and John W. Smith, Rising Sun, both of Ind., assignors to The McCarter Corporation, Norristown, Pa.
Filed Apr. 25, 1980, Ser. No. 143,787
Int. Cl.³ B28C *1/22, 5/00*
U.S. Cl. 366—4 11 Claims

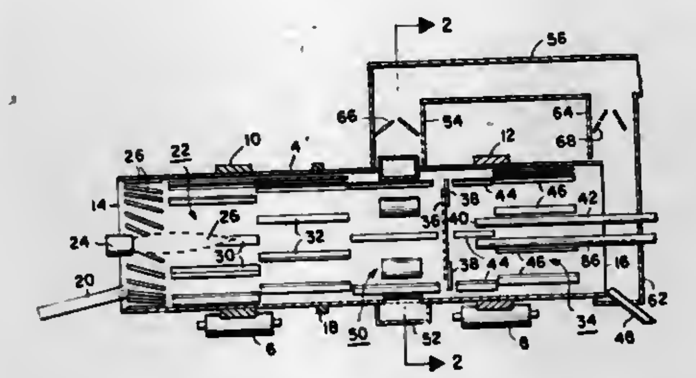

1. A method of preparing asphaltic concrete comprising introducing aggregate into a rotating drum, exposing the aggregate to heat in a first zone of said drum to effect drying of the aggregate while in said first zone, causing the aggregate to move to a second zone of the drum, introducing asphalt into the second zone of the drum, mixing the aggregate with asphalt in the second zone, and drawing air axially through said drum in the direction from said first zone toward said second zone, and characterized by the steps of drawing air from a third zone in said drum located between said first and second zones, drawing suspended particles produced in the drying step out of said drum along with the air drawn from said third zone, and at least temporarily isolating the suspended particles and air drawn out of said drum from said third zone from the asphalt and aggregate in said second zone.

4,298,288
MOBILE CONCRETING APPARATUS AND METHOD
Alvin J. Weisbrod, Huntington Beach, Calif., assignor to Anthony Industries, Inc., City of Commerce, Calif.
Filed Jan. 25, 1980, Ser. No. 115,416
Int. Cl.³ B28C *7/10, 7/12, 7/14*
U.S. Cl. 366—8 12 Claims

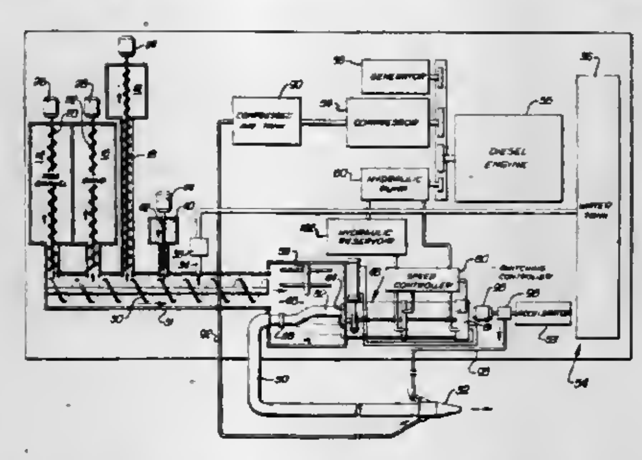

1. A mobile concreting apparatus for preparing a wet concrete slurry, from flowable solid ingredients therefor and water, and applying the wet slurry to a surface at a job site, the concreting apparatus comprising,

a plurality of containers, each adapted to contain one of the flowable solid ingredients,

a plurality of separate ingredient-feeding means, one for each ingredient, each of said ingredient-feeding means being connected to an associated one of said containers for feeding the ingredient contained in said container therefrom,

a plurality of control means, each said control means being connected to an associated one of said ingredient-feeding means for individually controlling the feed rate thereof,

mixing means connected to said ingredient-feeding means for receiving and mixing the ingredients fed thereto,

water supply means connected to said mixing means for supplying water thereto at an individually controllable rate, said mixing means mixing the flowable solid ingredients and the water to a wet concrete slurry,

a vehicle connected to and carrying said containers, said ingredient conveyor means, said control means and mixing means;

a hose,

a nozzle connected to one end of said hose for applying concrete to the surface, and

pump means connected to said mixing means and the other end of said hose for pumping the wet concrete slurry through said hose at a feed rate which is controllable independently of the feed rates of said ingredients to said mixing means.

4,298,289
MIXING DEVICE
Charles E. Walley, Cotton Abbotts, Waverton, Chester, England (CH3 5PH)
Filed Nov. 28, 1979, Ser. No. 98,360
Claims priority, application United Kingdom, Dec. 2, 1978, 46978/78
Int. Cl.³ B01F *7/02, 15/02;* A23N *17/00*
U.S. Cl. 366—196 5 Claims

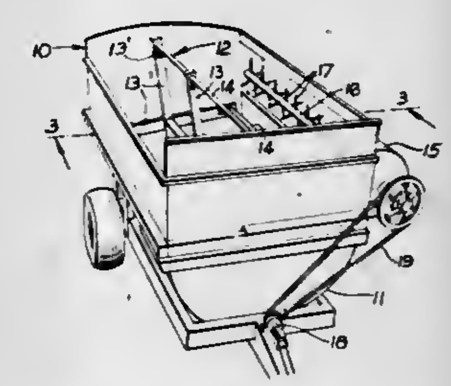

1. A vehicle for the high speed mixing, transport and discharge of animal feedstuffs comprising:

(a) a non-tipping body having a top open for loading by way of an upper zone of the body and a part cylindrical lower zone defined by an unbroken curved floor and wall structure centered on a first longitudinal axis of the vehicle; said lower zone being below said axis;

(b) a main agitator rotatably driven about said first longitudinal axis in a cylindrical envelope of revolution and provided with longitudinal agitator bars which travel in close proximity to substantially the full axial extent of said curved structure to draw material contained in the body lower zone along said structure in its direction of curvature without any substantial component of movement in an axial direction;

(c) a laterally projecting extension to one side of the body upper zone and wholly above the level of the first longitudinal axis, which extension is open to the latter zone along the full length of the body, said extension being to that side of the body at which said material is operatively driven upwardly by said main agitator bars;

(d) a secondary agitator journalled within said extension for rotation about a second longitudinal axis, operatively driven in the same direction of rotation as the main agitator at a substantially higher speed of revolution, and provided with a series of randomly disposed radially projecting elements substantially along the full length of the extension whose radially outer ends intercept the path of movement of material after it leaves the lower zone to separate a proportion of the material from its main bulk and carry it into and around said extension with resultant upward displacement before returning said proportion into an upper region of the body upper zone without any substantial component of movement in an axial direction; and

(e) a discharge opening along substantially the full length of said extension which can be selectively opened to permit discharge of said material from the extension under the action of said agitators to one side of the direction of travel of the vehicle.

4,298,290
SYSTEM AND PRINTER JUSTIFICATION SYSTEM
Johnny G. Barnes; Patrick J. Hurley, and Gary W. Miller, all of Austin, Tex., assignors to International Business Machines Corporation, Armonk, N.Y.
Filed Jun. 16, 1980, Ser. No. 159,552
Int. Cl.³ B41J *5/30*
U.S. Cl. 400—3 10 Claims

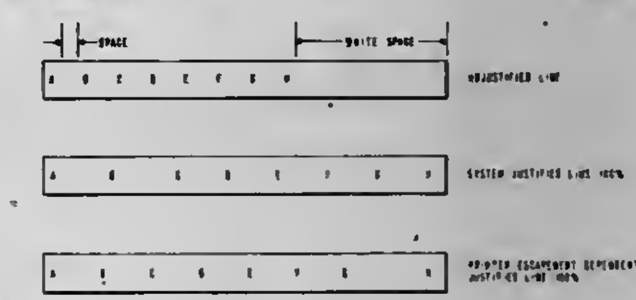

1. A system for justifying text lines made up of characters, words, and spaces, and to be printed with a printer having a minimum escapement unit differing from a minimum escapement unit for said system, said system comprising:

(a) means for scanning said line for determining a size of each word space in a line to be printed;

(b) means for dividing each determined word space size by said printer minimum escapement unit to obtain a quotient and any remainder;

(c) means for converting each determined word space size to a size including said quotient and accumulating said any remainder; and

(d) means for adding said accumulated remainder to a size of a word space on said line.

4,298,291
CONNECTOR CLAMP
Daniel L. Ward, Jr., 8671 Kumquat, Seminole, Fla. 33542
Filed Feb. 14, 1980, Ser. No. 121,466
Int. Cl.³ F16B *1/00*
U.S. Cl. 403—205 7 Claims

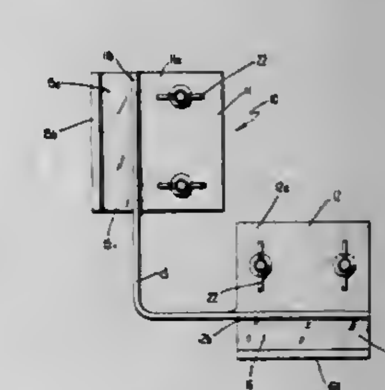

1. A connector clamp assembly for interconnecting modular display panels comprising

a clamp base including a pair of angle members having first and second legs normal to each other, a bridge member

integrally connected to the second leg of each angle member for bridging between the edges of adjacent panels;
a clamp angle connected to each angle member, having corresponding first and second leg elements;
said clamp angle being positioned to have said second leg element parallel to said second leg of said angle member to form a channel to receive the edge of said panel, and the first leg element being in juxtaposition to said first leg; and
adjustable fastener means connecting said first leg element and said first leg, whereby the width of said channel may be varied to securely clamp the corresponding edge of said panel and thereby interconnect the panels.

4,298,292
TRAFFIC DELINEATOR
Lawrence J. Sweeney, Seneca, Pa., assignor to Franklin Steel Company, Franklin, Pa.
Filed Dec. 10, 1979, Ser. No. 101,439
Int. Cl.³ E01F *9/00*
U.S. Cl. 404—10 **23 Claims**

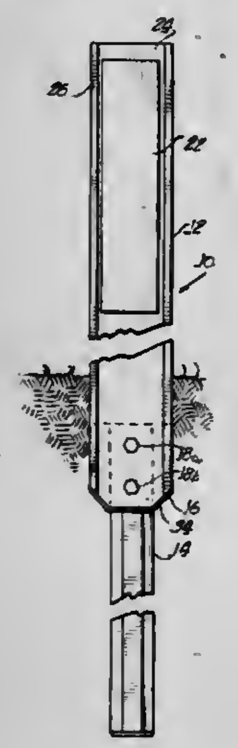

1. A traffic delineator assembly comprising:
a rigid anchor post drivable into the ground or roadway surface,
a rigid pilot plate drivable into the roadway surface attached to an upper end of said anchor post;
and an elongated flexible delineator member which is adapted to extend above the roadway surface attached to said pilot plate, the lower edge of said delineator lying generally adjacent to the lower edge of said pilot plate to follow said pilot plate into the roadway surface when said anchor post and said pilot plate are driven into the roadway surface, said delineator being sufficiently rigid to be unaffected by static conditions yet resiliently deformable to bend upon impact of a moving vehicle and spring back to an upright position.

4,298,293
CURB FORMING APPARATUS
Charlie J. Baucom, Rte. 2, Box 121, Webbers Falls, Okla. 74470
Filed Oct. 5, 1979, Ser. No. 82,311
Int. Cl.³ E01C *11/28*
U.S. Cl. 404—98 **10 Claims**

1. A curb forming apparatus for traveling along a single horizontal longitudinal form adjacent a side edge of a pavement comprising, in combination:
a frame having a front, rear, a first and second side members;
a plurality of aligned wheel means mounted to said first side member traveling upon said form;
a curb forming chute mounted within said frame adjacent said first side member and a lower portion thereof being adapted to slide against said form and said pavement;
means to bias said chute against said form;
a hopper means mounted to said frame above said chute and being provided with an opening in the lower portion thereof in communication with said chute;

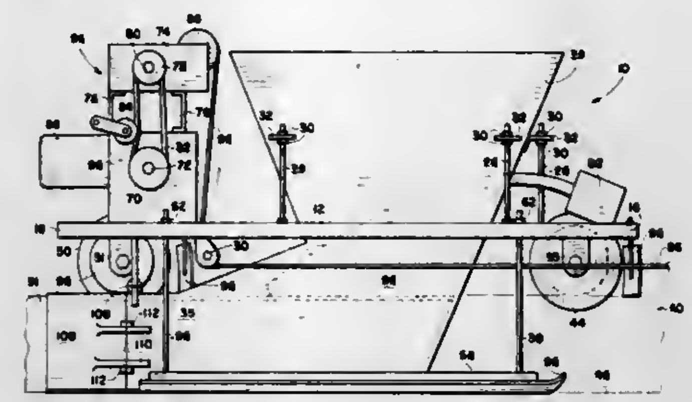

a skid pad attached to said second side member, adapted to slide upon said pavement; and
propulsion means operatively related to said frame to propel said apparatus along said form.

4,298,294
BASEMENT DEWATERING SYSTEM
C. Lyle Zimmerman, R.R. #1, West Liberty, Iowa 52776
Filed Mar. 26, 1979, Ser. No. 23,543
Int. Cl.³ E02D *31/02*
U.S. Cl. 405—37 **4 Claims**

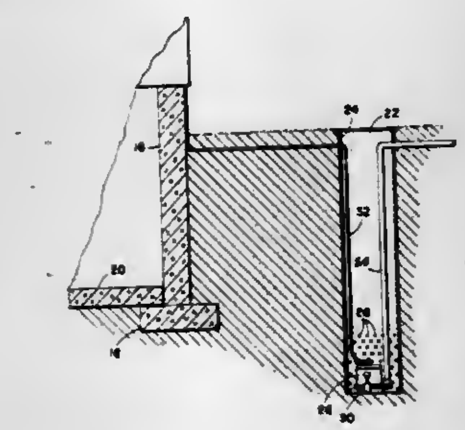

1. A drainage system for lowering the gravitational water level around a structure that is enclosed and extends below the ground, said system comprising means forming a vertical opening in the ground outside of and near said structure which opening extends from the surface of the ground to a level below the lowest level of said structure, said means including a lining of water-impervious material positioned inside of said vertical opening, said lining having a plurality of openings extending through it at its lower end to form a drainage access area extending below the lowest level of the structure, a submersible fluid pump located in said drainage access area at the lower end of said vertical opening, means responsive to the level of water in said vertical opening to start operation of said pump when said water level reaches a predetermined upper limit below the lowest level of the structure and to stop operation of said pump when said water level falls to a predetermined lower limit, and means connected to said pump to discharge water therefrom during the operation of the pump, said water being discharged at a substantial distance away from said structure.

4,298,295
COMPOSITE FLEXIBLE CONDUIT FOR SUCKING LARGE VOLUMES OF SEA WATER FROM DEEP WATER BODIES
Gian M. Bozzo, Treviso; Paolo Gava, Padua, and Antonio Paruzzolo, Venice, all of Italy, assignors to Tecnomare S.p.A., Venice, Italy
Filed Feb. 1, 1979, Ser. No. 8,481
Claims priority, application Italy, Mar. 3, 1978, 20833 A/78
Int. Cl.³ F02D *21/00;* **E02B** *9/00*
U.S. Cl. 405—52 **5 Claims**

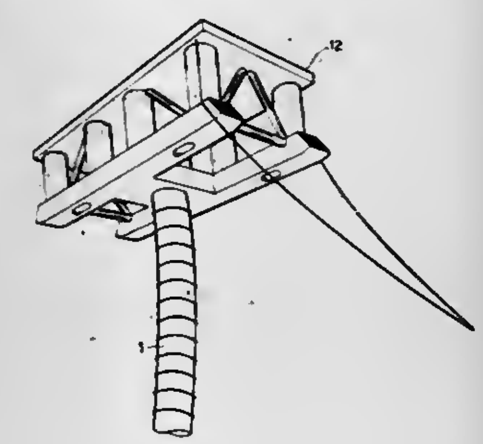

1. In a power station which exploits the temperature differential between the bottom and the surface of a body of water to produce power,
a substantially flexible conduit connected to the station at the surface of the body of water, wherein said conduit extends essentially vertical in the body of water, comprising:
a sequential array of essentially vertical cylindrical sections of a resilient material though which water is conveyed from the bottom of the body of water, and annular stiffening hoop members, each of which has inner and outer annularly spaced walls, wherein adjacent cylindrical sections are secured to said inner walls thereof to thereby connect said sections to said hoop member, and wherein the weight of said hoop members gives the cylindrical configuration to said sections and provides weight for maintaining said conduit in the essentially vertical position, and
a plurality of flexible cables arranged about said sections and hoop members parallel to the central axis of said conduit, wherein said cables are secured to said outer walls of said hoop members, and wherein said cables absorb stresses which would otherwise stress said cylindrical sections.

4,298,296
FORM HANDLING SYSTEM
Raymond A. Hanson, P.O. Box 7400, Spokane, Wash. 99207
Filed Oct. 4, 1979, Ser. No. 81,661
Int. Cl.³ E02D *29/10;* **E03F** *3/06*
U.S. Cl. 405—146 **24 Claims**

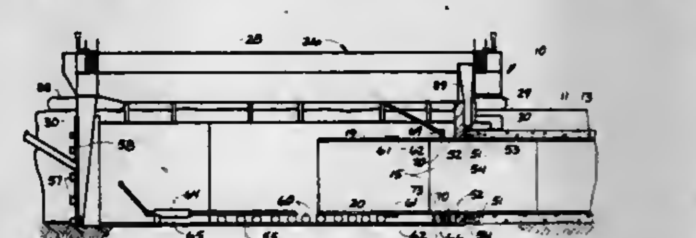

1. A system for forming an elongated monolithic concrete conduit within an excavation with releasably interconnected collapsible hollow inner form sections extending in a static line from a rearward end to a forward end comprising:
slipform means for receiving and directing wet concrete about the interconnected inner form sections;
drive means for moving the slipform means forwardly within the excavation as concrete is delivered to the slipform means;
form section transporter means for successively:
(a) collapsing a form section at the rearward end of the interconnected form members; (b) moving the collapsed form section forwardly through the remaining interconnected sections to the forward end of the static line; (c) re-expanding the collapsed form section for connection at the forward end of the static line; and (d) returning to the rearward end of the static line to collapse the next successive form section;
steering means for guiding the transporter means along within the static line of interconnected inner form sections; and
form cleaning means ahead of the slipform means for washing the successive inner form sections forward of the slipform means.

4,298,297
LOCK NUT
Richard B. Courson, Grosse Pointe Park, Mich., assignor to Almo Manifold and Tool Company, Centerline, Mich.
Filed Aug. 7, 1979, Ser. No. 64,376
Int. Cl.³ F16B *37/12*
U.S. Cl. 411—262 **14 Claims**

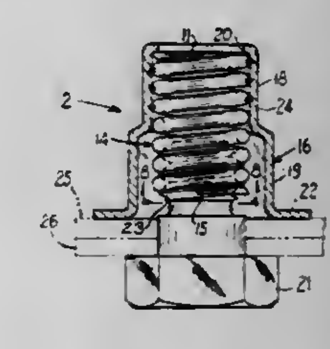

1. Improvement in a lock nut requiring a special removal procedure, said lock nut comprising a length of compression spring and a housing, the rear portion of said spring being disposed within said housing and being permanently fastened thereto, the front portion of said spring being unattached to and both disconnected and spaced from said housing and being freely movable for threadably engaging a bolt or the like of the same hand as the helix of said spring, the front end of said spring being closed out of the normal helix position and ground to form a flat planar end surface thereon so that, upon rotation of said lock nut, the front end of said spring will threadably engage and lock upon said bolt and so that, save for said special removal procedure, said lock nut cannot be unthreaded from said bolt, said special removal procedure consisting of lifting said ground and closed end off the bolt during unthreading of said lock nut.

4,298,298
REUSABLE WALL FASTENER
Louis J. Pontone, 935 E. 32nd St., Brooklyn, N.Y. 11210
Filed May 5, 1980, Ser. No. 146,527
Int. Cl.³ F16B *35/04, 37/00*
U.S. Cl. 411—342 **12 Claims**

1. A reusable wall fastener for attaching articles to an apertured wall, and the like, comprising:
a bolt having head means at one end and retaining end means at an opposite distal end;
a nut threadingly engaging said bolt between its head means and its retaining end means, said nut including laterally extending wings;
said retaining end means including an enlarged end cap to prevent removal of said nut from said bolt;
said head means being secured to said one end of said bolt to capture said nut between said head means and said end cap;

an elongated toggle housing pivotally receiving said wings of said nut at a midsection of said toggle housing;
said toggle housing including a rectangular member having a base wall, sidewalls, and at least a portion of a forward wall opposite said base wall, both ends of said rectangular member being open to threadingly receive said bolt longitudinally therethrough, and an aperture provided in said base wall to permit said bolt to pass therethrough as said rectangular member pivots relative to said nut and said bolt engaged by said nut, said aperture further permitting said bolt to be threaded transversely through said toggle housing;
registered holes extending through said sidewalls of said toggle housing at said midsection for pivotally receiving said wings of said nut securely therein;
biasing means coupled between said toggle housing and said wings for biasing said toggle housing in a coaxial orienta-

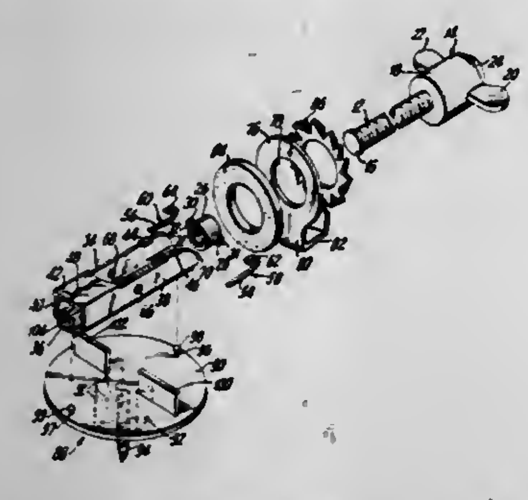

tion with respect to said bolt in order to insert said bolt through and remove said bolt from the apertured wall;
said biasing means including at least one cane shaped biasing spring having an elongated leg portion longitudinally extending against said base wall of said toggle housing and a hook portion engaging an associated one of said wings of said nut; and
cam means on said toggle housing for engaging an inside face of the apertured wall to thereby pivot said toggle housing against the bias of said spring into a position transverse with respect to said bolt so that said toggle housing will engage the inside face of the apertured wall as the bolt is continuously threaded;
said cam means including rounded corners on said sidewalls of said toggle housing at a front end of said toggle housing spaced from said portion of said forward wall of said toggle housing.

4,298,299
HAIRPIN COTTER KEY
James R. Quarles, 801 Hill St., Springfield, Tenn. 37172
Filed Dec. 18, 1978, Ser. No. 970,133
Int. Cl.³ F16B *21/14*
U.S. Cl. 411—514 7 Claims

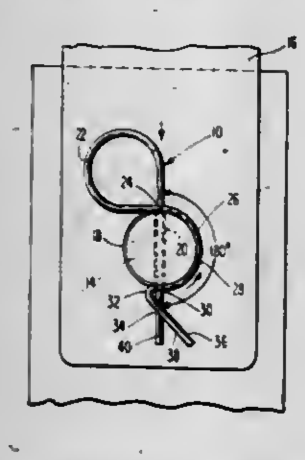

1. A locking pin for safely, reliably, and quickly performing repeated assembly and disassembly in the shop and field, without special tools, mechanical abilities, and aptitudes, said device comprising:
(a) a single piece of wirelike stock having appropriate gauge, platings, and coating for the intended application;
(b) said wire having a bend therein to form two legs, one of said legs being of greater length than the other of said legs;
(c) said one of said legs having a bend therein to form an arcuate loop of generally semicircular shape and thereafter extending tangentially from said arcuate loop across one side of said other leg at an angle of substantially 90° and extending beyond the crossover for a distance of more than one diameter of the wirelike stock to form an angular bend and again cross said one side of said other leg, and form a crotch to aid insertion of the locking pin.

4,298,300
MASTER-SLAVE MECHANICAL MANIPULATOR WITH HOMOTHETIC DISPLACEMENTS
Daniel Francois, and Charles Glachet, both of Vendome, France, assignors to La Calhene, France
Filed Sep. 24, 1979, Ser. No. 78,056
Claims priority, application France, Sep. 29, 1978, 78 27904
Int. Cl.³ B25J *3/02*
U.S. Cl. 414—2 12 Claims

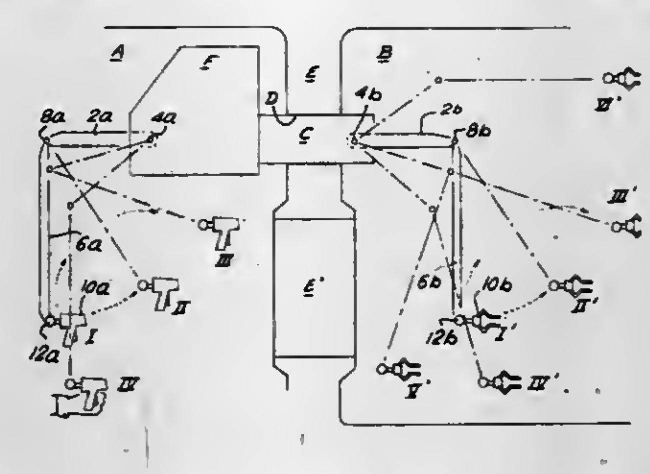

1. A master-slave manipulator having a master arm provided with a control handle and a slave arm controlled by the master arm and provided with a tool, said arms being connected by a shaft mounted in pivotal manner about a shaft axis with respect to a fixed support, the master arm and the slave arm each being of the articulated type and having an upper arm articulated about a shoulder axis perpendicular to the shaft axis and a lower arm articulated with respect to the upper arm about an elbow axis parallel to the shoulder axis, said manipulator comprising first means for defining a first point occupying a homethetic position of the control handle in a homothetic transformation of negative ratio relative to the shoulder axis of the master arm, and second means for placing said tool in a homothetic position of said first point in a homothetic transformation of negative ratio relative to a second point connected to the shaft, said first means comprising a first lever and a second lever which are both articulated and are parallel to the lower arm and to the upper arm of the master arm, respectively, and whose length ratio is the same as the ratio of the lengths of the lower and upper arms of the master arm, and said second means comprising a firt rod articulated to said first point about a first axis perpendicular to the shaft axis and a second rod having one end articulated to the first rod about a second axis parallel to the first axis and another end articulated to said second point about a third axis parallel to the first axis, means being provided to maintain one of the rods parallel to the upper arm of the slave arm and the other rod parallel to the lower arm of the slave arm, the ratio of the length of the rods being the same as the ratio of the lengths of the lower and upper arms of the slave arm.

4,298,301
BALE HANDLING APPARATUS
Jackie L. Carter, R.R. 2, Lucerne, Mo. 64655, and Jerry D. Carter, 320 S. 19th St., Unionville, Mo. 63565
Continuation-in-part of Ser. No. 752,151, Dec. 20, 1976, Pat. No. 4,148,399. This application Dec. 19, 1978, Ser. No. 970,917
The portion of the term of this patent subsequent to Apr. 10, 1996, has been disclaimed.
Int. Cl.³ B65H *75/40*
U.S. Cl. 414—24.6 4 Claims

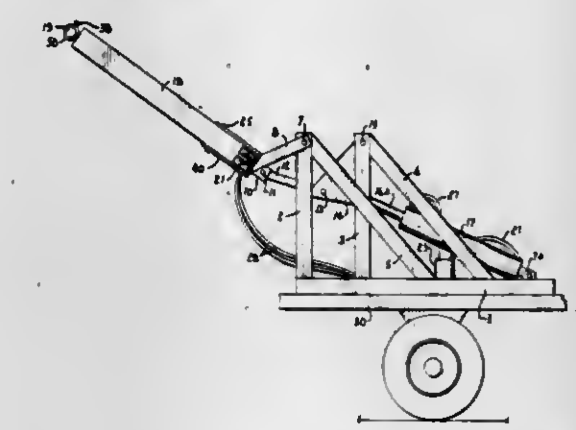

1. A device for handling large round hay bales comprising:
(a) frame means mounted on the bed of a vehicle wherein said frame means comprises:
(1) a base portion mounted on said bed;
(2) a first and second plurality of upright portions mounted on said base portions and extending well above said bed and base portion;
(b) an elongated beam means pivotally mounted on said first plurality of upright portions in a horizontal relationship with respect to the earth; said beam means being mounted such that it may move along an arcuate path toward and away from the earth and about the pivotal mounting points on said upright portions;
(c) first power actuated means pivotally connected at one end to said frame means;
(d) linkage means pivotally mounted on said second plurality of upright portions of said frame and connected to the other end of said first power actuated means;
(e) connecting means connected to said linkage means and to said beam means;
(f) plural arm means pivotally mounted on said beam means;
(g) second power actuated means connected to said plural arm means for pivoting the ends of said plural arm means toward and away from each other, said second power actuated means being mounted in approximately parallel relation to and inside of said beam means;
(h) spike means mounted on the said arm means in perpendicular relationship to said arm means such that as ends of said arm means pivot toward each other with a hay bale therebetween, said spike means will engage, deform and penetrate said hay bale to enable the lifting thereof by said first power actuated means acting through said arm means, beam means, connecting means and linkage means.

4,298,302
APPARATUS FOR TAKING OUT AND FEEDING SINGLE V-SHAPED STRIPS
Alberto Allievi, Milan, Italy, assignor to Amia di Adolfo e Alberto Allieve & C.S.N.C., Milan, Italy
Filed Oct. 1, 1979, Ser. No. 81,085
Claims priority, application Italy, Oct. 13, 1978, 28745 A/78
Int. Cl.³ B65G *59/06*
U.S. Cl. 414—126 14 Claims

1. An apparatus for removing single metal strips from a package of such strips and for feeding said removed strips singly to a position of further utilization, each said strip comprising an elongated V-shaped member having an acute apex angle, said strips being nested together by friction contact between elongated arms of adjacent said strips with an elongated free space between apices of each adjacent pair of strips, thereby forming said package, said apparatus comprising:
storage means for storing therein a package of strips with the apices of said strips directed downwardly and such that said package is movable downwardly within said storage means due to gravity;
support means movable in opposite longitudinal directions orthogonal to the direction of the longitudinal axis of said package of strips between a first operative position, whereat said support means is beneath and supports said package by contact with the lowermost strip of said package, and a second inoperative position, whereat said support means is withdrawn from beneath said package;
separating means for separating said lowermost strip from said package and for allowing the thus separated strip to fall by gravity from said storage means, said separating means comprising a pair of longitudinal members positioned at opposite ends of said lowermost strip and having a common axis longitudinally coincident with the elongated free space between the apices of said lowermost strip and the next adjacent said strip, said pair of members having a facing conical ends, said members being simultaneously movable in opposite longitudinal directions between first inoperative positions whereat said conical ends are axially spaced from said elongated free space, second intermediate positions, whereat portions only of said conical ends extend into said elongated free space and support

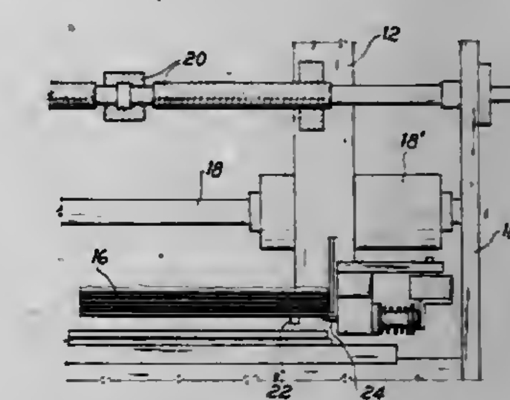

said package by contact therewith at locations on said conical ends midway between opposite smaller and larger diameter end portions thereof, and third separating positions whereat the entire said conical ends extend into said elongated free space, each said conical end having a diameter at said location thereof contacting said package when in said second intermediate position not greater than the size of said elongated free space, whereby said lowermost strip remains in friction contact with said next adjacent strip, and the diameter of said larger diameter end portion of each said conical end being greater than size of said elongated free space, whereby when said members move to said third separating position said lowermost strip is forceably separated from friction contact with said next adjacent strip and falls by gravity from said storage means;
control means, operatively connected to said support means and to said separating means, for sequentially moving said members from said first inoperative position thereof to said second intermediate position thereof, moving said support means from said first operative position thereof to said second inoperative position thereof, whereby said package is supported by said members, moving said members from said second intermediate position thereof to said third separating position thereof, whereby said lowermost strip is separated from said package and falls by gravity from said storage means, and vice versa; and
means for receiving the thus separated said strip and for feeding said strip to a position of further utilization.

4,298,303
DEVICE FOR TRANSPORTING AND STORING SPOOLS AND PARTICULARLY YARN SPOOLS
Josef Ritschel, Freiburg, Fed. Rep. of Germany, assignor to Rhodia AG, Freiburg im Breisgau, Fed. Rep. of Germany
Filed Sep. 5, 1979, Ser. No. 72,629
Claims priority, application Fed. Rep. of Germany, Sep. 9, 1978, 2839296
Int. Cl.³ B65G *67/00*
U.S. Cl. 414—401 **8 Claims**

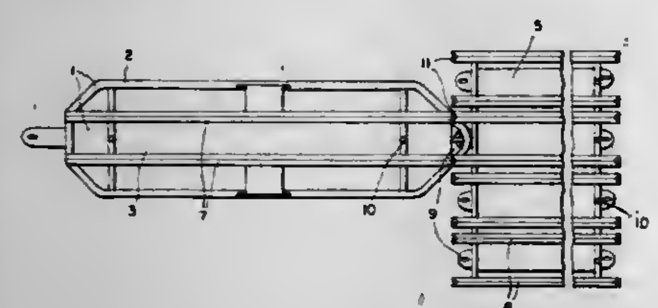

1. A device for the take-up, storage and transportation of spools, particularly yarn spools, which comprises:
(a) a spool carriage (1) which consists of a subframe (2) and a spool rack (3), the subframe and the spool rack being connectable together and separable from each other;
(b) said spool rack being similarly connectable to a pallet (5) and being separable therefrom in the same manner;
(c) the pallet being engageable with the subframe (9) means for coupling said pallet to said subframe (9);
(d) the pallet being capable of take-up of several spool racks;
(e) coupling means between said spool carriage and said pallet.

4,298,304
VEHICLES WITH DEMOUNTABLE BODIES
Anthony E. Jones, Frenchay, near Bristol, England, assignor to Brimec (U.K.) Limited, Avon, England
Filed Nov. 17, 1978, Ser. No. 961,818
Claims priority, application United Kingdom, Nov. 17, 1977, 22422/77; Jan. 10, 1978, 00826/78
Int. Cl.³ B60P *1/14*
U.S. Cl. 414—492 **3 Claims**

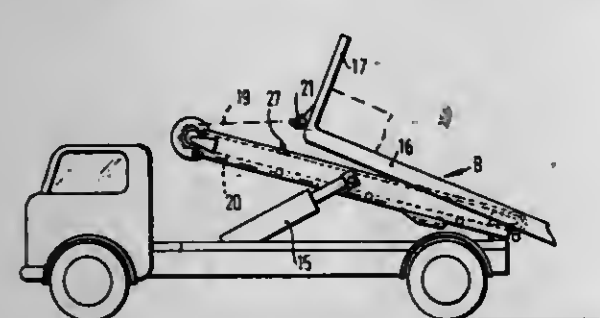

1. A vehicle having a support for a demountable body, means for moving the support between a horizontal or substantially horizontal position and an inclined position in which one end thereof is higher than the other end thereof and means for mounting a body on the support and for demounting the body therefrom, wherein the mounting and demounting means comprises (a) an ended chain, guide means for the chain comprising a sprocket mounted on the support at or adjacent said one end thereof, the chain extending around a portion of the periphery of the sprocket and having a portion thereof extending from the sprocket along the support towards said other end of the latter, attachment means provided at the free end of said portion of the chain for connection to a demountable body, and drive means drivingly connected to the sprocket, the guide means also comprising a guide mounted on the support and arranged to guide the chain into engagement with the sprocket on turning of the latter by the drive means and to maintain it in such engagement as it passes around the sprocket, and the drive means being operable to cause the chain, with the support in an inclined position or a horizontal or substantially horizontal position, to draw a body on to said other end of the support and along the latter into a mounted position, and with the support in an inclined position, to control movement of a body under gravity from a mounted position downwardly along the support and off said other end thereof, and (b) an endless flexible linear element which extends around two direction-reversing means mounted on the support at or adjacent the respective ends thereof and carries a pusher element, said drive means also being drivingly connected to said endless linear element and operable, with the support in a horizontal or substantially horizontal position, to cause the pusher to engage a body in a mounted position on the support and to push it along the support and off said other end of the latter.

4,298,305
METHOD AND APPARATUS FOR TRANSFERRING LOADS
Walter Neth, Vancouver, Wash., assignor to Columbia Machine, Inc., Vancouver, Wash.
Filed Nov. 22, 1978, Ser. No. 962,888
Int. Cl.³ B60P *1/64*
U.S. Cl. 414—498 **20 Claims**

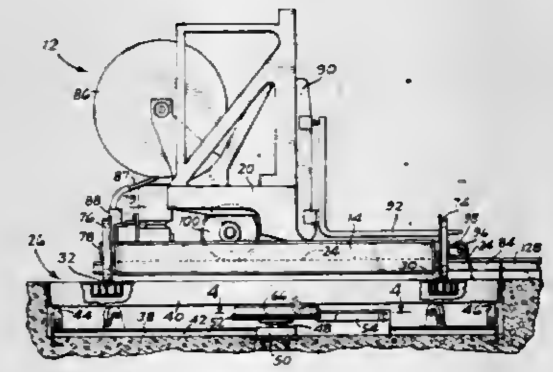

1. Apparatus for transferring a load between selected stations comprising:
transfer car means operable for selective shifting along a first predetermined path interposed between first and second stations;
orienting means positioned adjacent and fixed relative to said first predetermined path operable for selective rotation through a predetermined angular displacement, said orienting means including turntable means and power-driven means coupled thereto, said power-driven means being operable for angularly displacing said turntable means about a substantially vertical axis of rotation, said turntable means also including track means selectively alignable with said first predetermined path upon suitable positioning of said turntable means for receiving said transfer car means thereon; and
load carrier means operable for picking up and depositing a load, said load carrier means being mounted on and powered from said transfer car means and operable for reciprocative shifting thereon from a pre-spot position to load receiving and depositing positions, said load carrier means also being shiftable to positions remote from said transfer car means for selective positioning along a second predetermined path.

4,298,306
APPARATUS FOR LOADING SOLID MATERIAL INTO A CONTAINER
Emile Chaodorge, Angerville, France, assignor to Chaudronnerie Tolerie Industrielle d'Angerrville "CTIA", France
Filed Sep. 14, 1979, Ser. No. 75,759
Claims priority, application France, Sep. 18, 1978, 78 26669
Int. Cl.³ B65F *3/00*
U.S. Cl. 414—525 R **10 Claims**

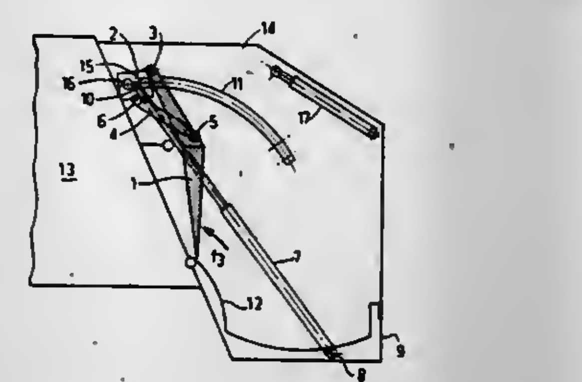

1. A loading apparatus comprising:
a hopper, said hopper having a side;
a loading blade having a top and having a bottom edge, said bottom edge extending into said hopper;
moving means for moving said blade through said hopper between a first position in said hopper adjacent said side of said hopper and a second position below in said hopper and laterally displaced in said hopper from said first position and located farther from said side of said hopper; said moving means comprising guide means in said hopper and a slidable transverse beam disposed to move along said guide means and being free of any fixed connection to said hopper; said top of said blade being pivotally secured to said transverse beam at a first location; and said moving means further comprising first hydraulic cylinder means connected between said hopper and a second location on said transverse beam for moving said transverse beam along said guide means, said second location being below said first location when said blade is in said first position; and
pivoting means for pivoting said blade in said hopper between a third pivot position at which said blade bottom edge is pivoted nearer said hopper side and a fourth pivot position at which said blade bottom edge is pivoted farther from said hopper side; said pivoting means comprising second hydraulic cylinder means connected between said blade and a third location on said transverse beam that is below said first location when said blade is in said first position; at least one of said first and second hydraulic cylinder means being disposed generally below said transverse beam when said blade is in said first position.

4,298,307
AIR FLOAT POWER ROTATION SYSTEM
Raymond A. Bergman, 107 E. Second St., Minster, Ohio 45865
Continuation-in-part of Ser. No. 924,958, Jul. 17, 1978, Pat. No. 4,179,106, which is a continuation of Ser. No. 815,676, Jul. 14, 1977, abandoned, which is a division of Ser. No. 684,725, May 5, 1976, Pat. No. 4,058,885. This application Oct. 29, 1979, Ser. No. 88,772
Int. Cl.³ B23Q *7/00*
U.S. Cl. 414—676 **20 Claims**

1. A pressurized fluid support system comprising:
a support table having a generally flat upper surface adapted for supporting a workpiece fixture thereon,
means for supplying a cushion of fixture supporting pressurized fluid to the surface of the table whereby a workpiece fixture may be floatingly supported thereon,
keying element means rotatably mounted within said table and having a portion thereof extending upwardly from said table under surface, the portion of said keying element means extending from the table surface having a non-circular cross-sectional shape within a plane parallel to the table surface whereby the keying element means is capable of keying to an overlying workpiece fixture,
means within said table for rotating said keying element means relative to said table about an axis normal to the upper surface of said table, and

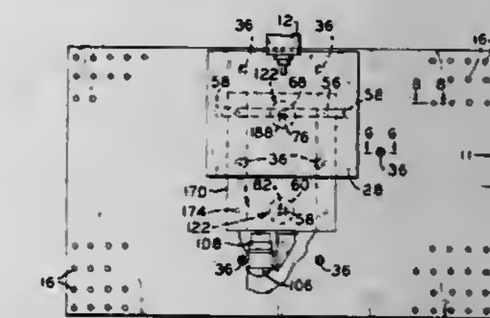

a workpiece fixture having a lower surface supported on said table upper surface on the cushion of pressurized fluid, and including an opening in said lower surface keyed to said keying element means so that said fixture will be rotated by said keying element means,
said keying element means comprising a pin mounted for retraction to a position flush with or below the table upper surface.

4,298,308
APPARATUS FOR DETECTING FORCES DIRECTING THE MOVEMENT OF A MANIPULATING INSTRUMENT
Hans Richter, Oberlanderstrasse 123, D-8900 Augsburg, Fed. Rep. of Germany
Filed Sep. 24, 1979, Ser. No. 78,280
Int. Cl.³ G05B *19/42;* **B25J** *9/00*
U.S. Cl. 414—730 **33 Claims**

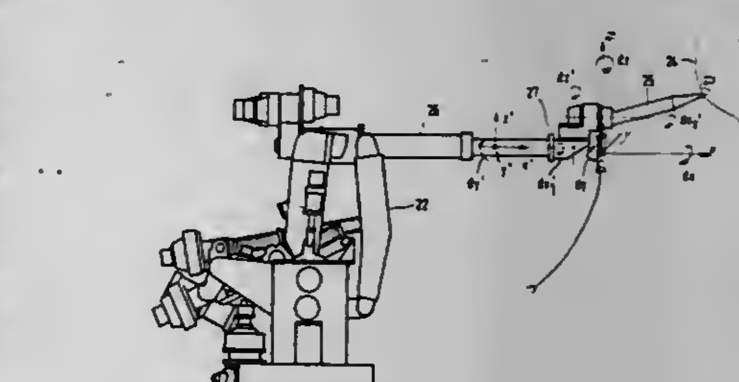

1. In combination with a motor driven manipulating arm capable of movement along mutually perpendicular axes, an apparatus for programming said manipulating arm to precisely repeat a sequence of movements, said apparatus comprising:
a handle assembly including a center part rigidly attached to said manipulating arm for joint movement therewith, said handle assembly further including an outer sleeve portion surrounding said center part;
flexible coupling means for joining said outer sleeve to said center part while allowing limited relative movement therebetween; and,
data transducer means mounted on said handle assembly for detecting forces acting on said outer sleeve and generating output signals indicative of the magnitude and direction of said forces, whereby said signals are employed to create a playback program directing said motor driven manipulating arm to repeatedly perform the same sequence of movements.

4,298,309
PIPE CARRYING CARTS
Woodrow W. Stoltz, P.O. Box 35103, Tulsa, Okla. 74135
Filed Apr. 30, 1979, Ser. No. 34,476
Int. Cl.³ B65H *51/00*
U.S. Cl. 414—745 **3 Claims**

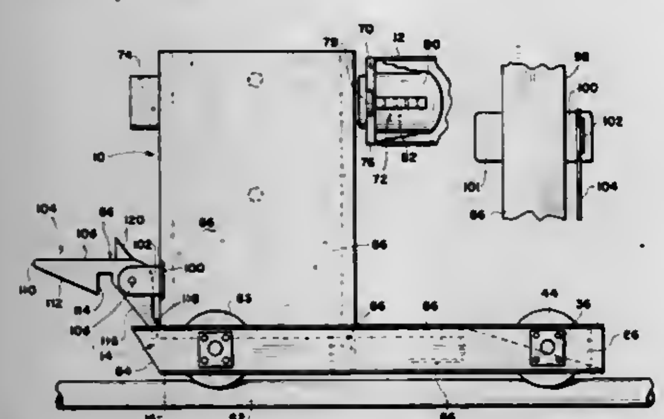

1. A wheeled vehicle for facilitating the transport of linearly arranged objects, said vehicle comprising main frame means, wheel means journalled on said frame means for moving said vehicle, pedestal means provided on said vehicle, object engaging and supporting means carried by the pedestal for receiving one end of the object, latching means provided on the vehicle for selective connection between a pair of adjacent substantially identical vehicles for coordinated operation between the said vehicles, and said wheel means comprising at least two pairs of axially aligned wheels with all wheels being in tracking position with respect to the other relatively positioned wheels, said latching means being carried by the pedestal means and cooperating with the latching means of said adjacent vehicle for a latching engagement in one relative position between the adjacent vehicles, said latching means comprising a bracket member rigidly secured to one outer wall of the pedestal means, flange means secured to the bracket member and disposed in spaced relation to the outer wall of the pedestal means, and a latch member pivotally secured to said flange means for selective engagement with the bracket member of the said adjacent vehicle for connecting the two vehicles in tandem relation.

4,298,310
PROCESS AND APPARATUS FOR PREVENTION OF SURGING IN TURBOCOMPRESSORS
Wilfried Blotenberg, Oberhausen, Fed. Rep. of Germany, assignor to Gutehoffnungshütte Sterkrade AG, Fed. Rep. of Germany
Filed Jun. 27, 1979, Ser. No. 52,823
Claims priority, application Fed. Rep. of Germany, Jun. 27, 1978, 2828124
Int. Cl.³ F04D *27/02*
U.S. Cl. 415—1 **9 Claims**

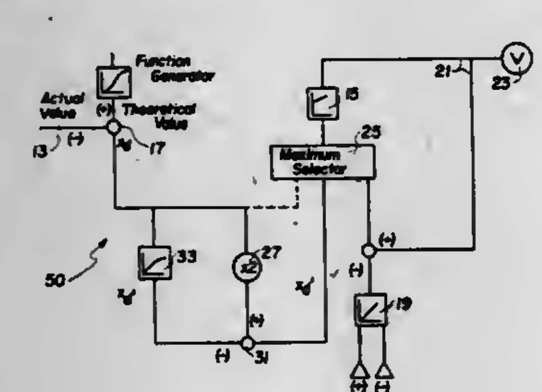

1. A process for the operation of a turbo-compressor having an output at an actual value of an operating parameter, and a blow-off valve for regulating the output to prevent surging of the output above a surge limit and to prevent a reduction of the output below a minimum value, with comparing means for measuring the actual value and comparing to a permissible theoretical value for the parameter, and controlling means for controlling the blow-off valve in accordance with an output from the comparing means, comprising: forming a first difference value between the theoretical value and the actual value, forming a delayed value from the difference value, forming a second difference value between the delayed value and the first difference value, and controlling the blow-off valve in accordance with the second difference valve.

4,298,311
TWO-PHASE REACTION TURBINE
Emil W. Ritzi, Manhattan Beach, Calif., assignor to Biphase Energy Systems, Santa Monica, Calif.
Filed Jan. 17, 1980, Ser. No. 113,113
Int. Cl.³ F01D *1/18*
U.S. Cl. 415—80 **19 Claims**

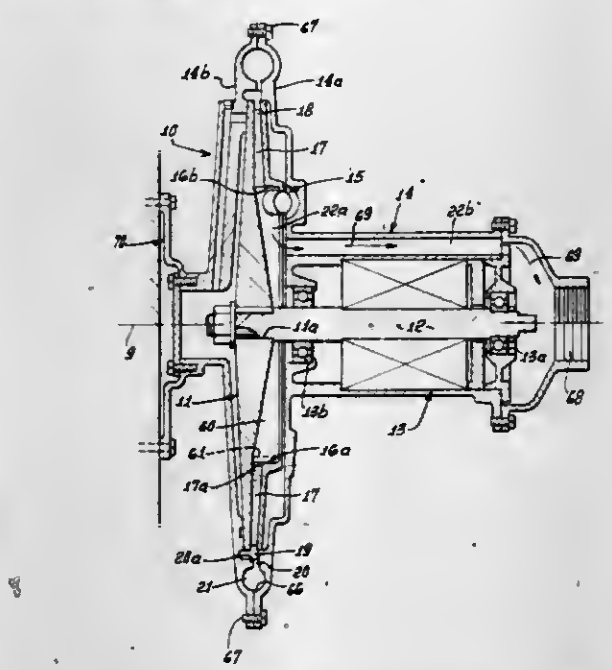

1. In a reaction turbine, the combination comprising
(a) first nozzle means to receive heated fluid for expansion therein to form a two-phase discharge of gas and liquid,
(b) a separator rotor having an axis and a rotating surface located in the path of said discharge for supporting a layer of separated liquid on said surface,
(c) the rotor having reaction nozzle means to communicate with said layer to receive liquid therefrom for discharge in a direction or directions developing torque acting to rotate the rotor.

4,298,312
DAMAGED VANE LOCATING METHOD AND APPARATUS
Michael C. MacKenzie, Pasadena, and Reinhold S. Fischer, Los Angeles, both of Calif., assignors to Purex Corporation, Lakewood, Calif.
Filed Jul. 24, 1979, Ser. No. 60,128
Int. Cl.³ F01B *25/16;* **G02B** *5/16*
U.S. Cl. 415—118 **23 Claims**

1. In the method of locating in situ a damaged vane in a front stage of stator vanes of a jet engine, the engine also containing a stage of rotor blades and a rear stage of stator vanes, the rotor blade stage located between the front and rear stator vane stages, the engine including a housing about said stages, the method employing a first radiation passing cable having a probe end, said method including:
(a) inserting the probe end of the cable through the housing and between vanes in said rear stage,
(b) extending said probe end of the cable beyond said rear stage and toward blades of said rotor blade stage,
(c) providing a hook on a second cable protruding from the probe end of the first cable and hooking said hook to one of the rotor blades by manipulation of the second cable while blocking rotation of the second cable relative to the first cable, so as to block rotation of the first cable relative to said one blade,
(d) rotating said rotor to carry said probe end of the cable relatively past successive vanes in said front stage while

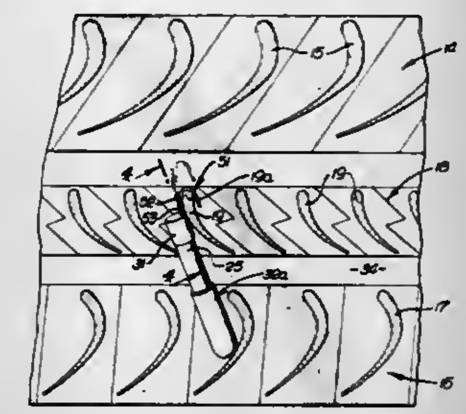

maintaining said probe end directed toward the locus of said vanes in said rear stage so that said front stage vanes are successively brought into the field of view of said probe end, and
(e) remotely viewing said successive vanes of the front stage via transmission of an image of the vanes through the first cable.

4,298,313
HORIZONTAL AXIS WIND GENERATOR HAVING ADAPTIVE CYCLIC PITCH CONTROL
Kurt H. Hohenemser, 2421 Remington La., Brentwood, Mo.
Filed Jun. 18, 1979, Ser. No. 49,348
Int. Cl.³ F03D *7/02*
U.S. Cl. 416—98 **18 Claims**

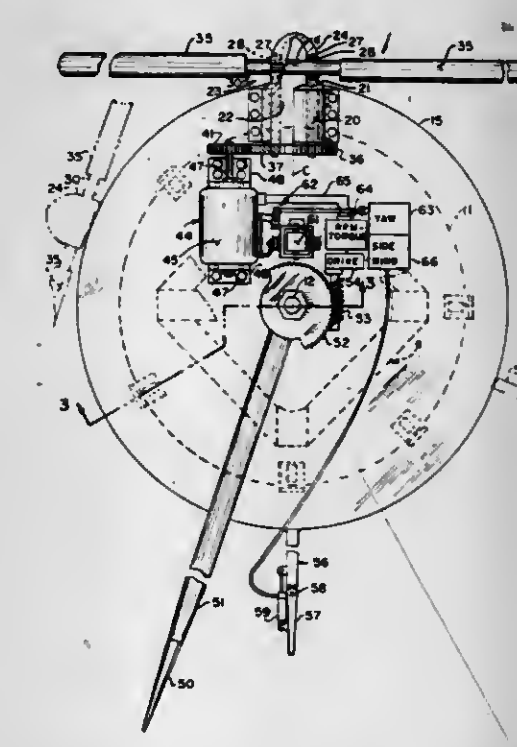

1. A wind energy conversion machine comprising
mast structure,
means for permitting yawing motions at the upper end thereof about a vertical axis, and
wind-responsive components supported on said yaw-permitting means, said components comprising
hub bearing means to establish substantially horizontal rotor axis, and
a rotor having a hub so mounted rotatably in said bearing means as to project the rotor to one side of said mast structure,
the hub having means coupling its rotation to power extracting means, and further having, outwardly of said bearing means,
a transverse shaft having angular oscillation-permitting means supporting it relative to the hub and projecting at each side of the hub, and
a pair of rotor blades mounted on the projecting ends of said transverse shaft,
whereby as the rotor rotates about its said horizontal axis, cyclic pitch variation of the shaft to increase the angle at which one blade meets the relative wind is accompanied by a corresponding decrease of the pitch angle of the other blade, together with
means independent of the mast structure to so yaw the said supported components as to effect an angular offset of said rotor axis relative to the wind direction, which offset increases with wind speed.

4,298,314
HERMETIC COMPRESSOR HAVING A VALVE TO DRAIN LIQUID ACCUMULATIONS FROM ITS CYLINDER HEAD
Paul G. Thayer, Staunton, Va., assignor to Westinghouse Electric Corp., Pittsburgh, Pa.
Filed Jan. 10, 1980, Ser. No. 110,977
Int. Cl.³ F04B *35/04, 49/02*
U.S. Cl. 417—299 **3 Claims**

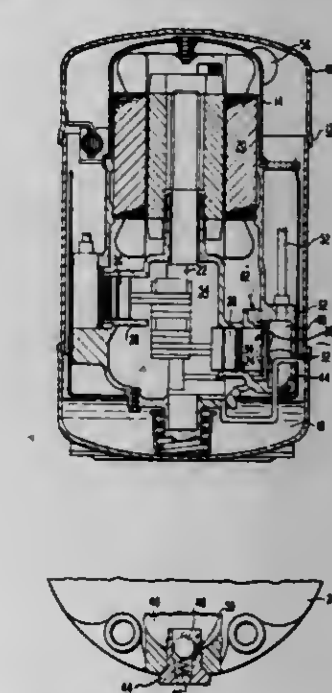

1. A hermetic refrigerant compressor comprising:
a hermetic shell having a motor compartment in its upper portion and a crankcase compartment with an oil sump in its lower portion;
a motor in said motor compartment driving a vertically disposed crankshaft which extends down into said lower portion;
a plurality of cylinders arranged radially around the lower portion of said crankshaft and driven thereby, each cylinder having suction valve means and discharge valve means;
a cylinder head for each cylinder, said head defining a discharge pressure space radially outwardly of said discharge valve means and in communication with the compression space of its cylinder only through said discharge valve means; and
drain valve means in the bottom portion of said cylinder head of at least the lowermost of said cylinders, said drain valve means having open and closed positions in response to pressures in said discharge pressure space below and above, respectively, a predetermined pressure, to drain

liquid accumulations from said discharge pressure space to said oil sump during period of non-operation of said compressor.

4,298,315
POSITIVE DISPLACEMENT PUMP SYSTEMS
Ian T. Bristow, Higham, and Nigel J. Petts, Rochester, both of England, assignors to Hobourn-Eaton Limited, Rochester, England
Filed Dec. 10, 1979, Ser. No. 101,789
Claims priority, application United Kingdom, Dec. 13, 1978, 48270/78
Int. Cl.³ F04B *49/00*
U.S. Cl. 417—300 **2 Claims**

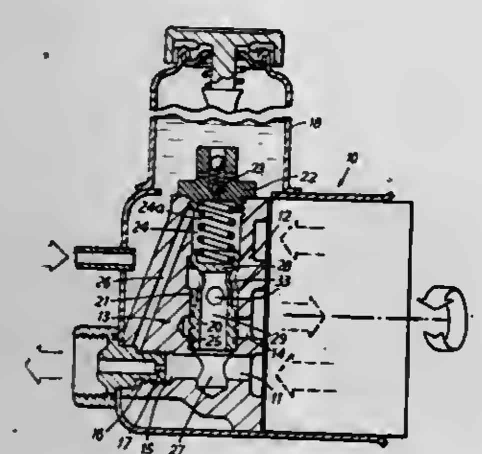

1. A positive displacement pump system providing first and second delivery passages for pumped fluid, a main discharge passage, a restrictor in the main discharge passage, a permanently open connecting passage between the first delivery passage and the main discharge passage, a valve bore opening at one end to the connecting passage, the second delivery passage opening to the valve bore, an overspill port opening to the valve bore at a location which is axially between said one end and said second delivery passage, a valve member mounted in said bore, a chamber at the other end of the valve bore which chamber communicates with the main discharge passage at a location downstream of the restrictor and is permanently closed off from the second delivery passage by the valve member, a duct extending through the valve member and opening permanently at its opposite ends to the second delivery passage and said one end of the valve bore, a spring in said chamber urging the valve member into a stop position in which the valve member blanks off communication between the connecting passage and the overspill port, the valve member being movable against the spring force to uncover the overspill port progressively to place the overspill port in communication with the connecting passage.

4,298,316
POWER STEERING PUMP
Guntis V. Strikis, Belleville, Mich., assignor to Ford Motor Company, Dearborn, Mich.
Division of Ser. No. 901,915, May 1, 1978, Pat. No. 4,207,038. This application May 18, 1979, Ser. No. 40,246
Int. Cl.³ F04B *49/00*
U.S. Cl. 417—310 **2 Claims**

1. A fluid port comprising a rotor, a cam ring surrounding said rotor, pumping elements carried by said rotor in sliding engagement with said cam ring, said cam ring and said rotor cooperating to define a pumping chamber, an inlet port and an outlet port communicating with said pumping chamber, valve means for controlling the rate of flow of fluid delivered by said pump comprising a valve housing, a high pressure valve port communicating with said outlet port, a valve bypass port communicating with said inlet port, a movable valve spool, a valve chamber slidably receiving said valve spool, said movable valve spool controlling the degree of communication between said high pressure port and said bypass port, a venturi element having a throat portion, an inlet portion and an outlet portion connected by said throat portion, said venturi element inlet portion communicating with said high pressure port and said venturi element outlet portion being connected to a delivery passage, spring means normally biasing said valve spool toward a position that interrupts the communication between said high pressure port and said bypass port, venturi pressure passage means connecting said venturi throat with one side of

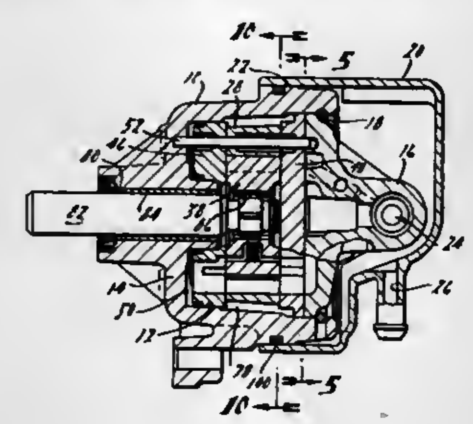

said valve spool whereby the venturi throat pressure reduction supplements the force of said spring acting on said valve spool, and a supplemental valve port in said valve chamber located near said bypass port and adapted to be uncovered by said valve spool to establish communication between said venturi pressure passage and said bypass port when the speed of said pump exceeds a predesigned value whereby the rate of increase of pump delivery upon a given increase in pump speed is lower at high speeds than it is at lower speeds.

4,298,317
OVERSPEED SAFETY DEVICE
Gunnar C. Hansson, Stockholm, Sweden, assignor to Atlas Copco Aktiebolag, Nacka, Sweden
Filed Oct. 9, 1979, Ser. No. 82,575
Claims priority, application Sweden, Oct. 11, 1978, 7810607
Int. Cl.³ F01B *25/02*
U.S. Cl. 418—43 **10 Claims**

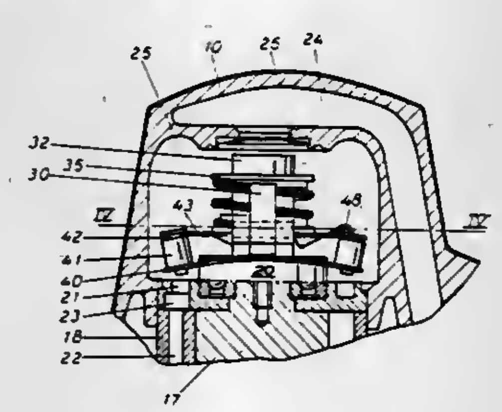

1. In a pneumatic motor (11), comprising a rotor (17) drivingly connected to an output spindle (12); a pressure air supply passage (24); at least one air inlet opening (23) to the motor (11); and an overspeed safety device including a rotating annular valve disk (40) which is elastically deformable and disposed within the pressure air supply passage for axial displacement between an open position and a closed position in which closed position it at least partly covers said at least one air inlet opening (23);

the improvement wherein said overspeed device further comprises:

releasable latch means (41,42,43) coupled to said valve disk (40) to retain said valve disk (40) in the open position at motor speeds below a predetermined speed;

said latch means (41,42,43) comprising at least two holding

dogs (41) attached to said valve disk (40) and a suspender means (43) rigidly attached to the rotor (17) of said motor (11), said holding dogs (41) being at normal motor speed urged into latching engagement with said suspender means (43) by a spring force obtained by elastic preforming of said elastically deformable valve disk (40), and said holding dogs (41) being responsive to centrifugal action at motor speeds exceeding said predetermined speed to elastically deform said valve disk (40) to release said latching engagement of said holding dogs (41) with said suspender means (43) to thereby permit said valve disk (40) to move towards its said closed position.

4,298,318
ROTARY VALVE FOR FLUID MOTOR OR PUMP
Shunji Tsuchiya, Fujisawa, and Takashi Takamatsu, Kamakura, both of Japan, assignors to Tokyo Keiki Company Limited, Tokyo, Japan
Continuation of Ser. No. 915,211, Jun. 13, 1978, abandoned. This application Nov. 27, 1979, Ser. No. 97,938
Claims priority, application Japan, Mar. 29, 1978, 53-40551
Int. Cl.³ F01C *21/12*
U.S. Cl. 418—61 B **7 Claims**

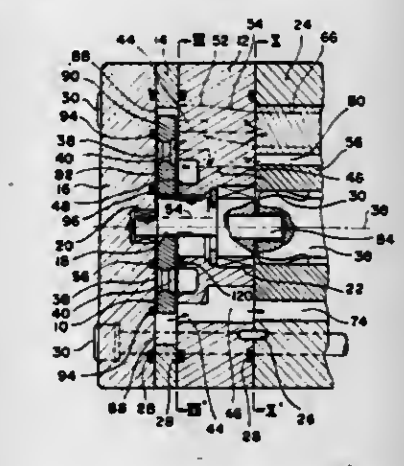

1. A rotary valve construction coupled to a drive shaft of a fluid motor or pump for selectively controlling fluid flow to a plurality of cavities defined by a stator having internal teeth and a rotor coupled to the drive shaft and having one less external tooth than the number of the teeth of said stator and in mesh with said stator eccentrically for orbital travel about an axis of rotation, said rotary valve construction comprising:

a pin coaxially coupled to the drive shaft;

an eccentric circular cam including a driving eccentric shaft and a driven eccentric shaft having a phase difference of 90° with said driving eccentric shaft, said driven shaft having an axis aligned with the axis of said stator, said driving shaft having an elongated hole receiving said pin in a position offset from the axis of said driven eccentric cam by an amount corresponding to the radius of the path of orbital travel of the rotor with respect to said stator so that the orbital rotation of the rotor is transmitted to said eccentric cam;

a commutator movably fitted on the driven eccentric shaft of said eccentric circular cam for orbital rotation therewith, said commutator having opposite sides and a pair of annular grooves formed in said sides and in communication with each other;

a spacer rotatably accommodating said commutator and determining a clearance on each side of said commutator, said commutator being rotatable within said spacer and defining a peripheral cavity therewith;

a port member having a plurality of passages selectively connecting (a) said cavities defined by the teeth of said stator and said rotor and selectively expanded and contracted in response to orbital rotation of said commutator and (b) the annular grooves of said commutator or (c) said peripheral cavity, said port member further having a pair of fluid passages respectively providing permanent communication between said annular grooves of said commutator and said peripheral cavity with the ambient atmosphere through said spacer;

an end cover axially secured to said stator; said port member and said spacer being axially secured, in this axial order, between said stator and said end cover, said end cover rotatably supporting said eccentric circular cam; and

seal means between said end cover and said commutator at locations between the annular groove on the commutator and said peripheral cavity and between the annular groove on the commutator and the eccentric cam.

4,298,319
HYDRAULIC GEAR PUMP OR MOTOR WITH FLOATING WEAR PLATES, BALANCE ASSEMBLY, AND UNITARY LOAD BEARING AND ALIGNMENT MEANS
James L. Glidden, Kalamazoo, Mich., assignor to General Signal Corporation, Stamford, Conn.
Filed Oct. 29, 1979, Ser. No. 88,968
Int. Cl.³ F03C *2/08;* **F04C** *2/18, 15/00*
U.S. Cl. 418—132 **3 Claims**

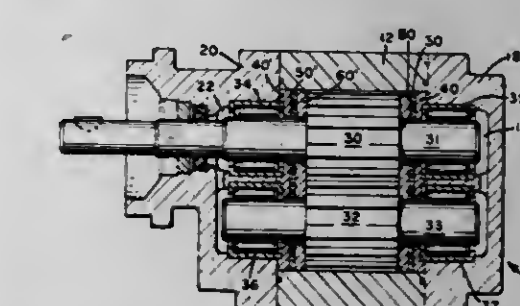

1. A fluid gear pump or motor apparatus comprising:

(a) a housing having an inlet and an outlet;

(b) an end cover and an adapter cover jointed to opposite ends of said housing;

(c) a pair of meshed gears in said housing, each gear being rotatably mounted on a corresponding gear shaft that extends into said end cover and into said adapter cover;

(d) bearings mounted in said end and adapter covers for rotatably supporting said gear shafts; and

(e) a pair of floating wear plates, each wear plate having a pair of openings through which the gear shafts pass, said openings having a degree of tolerance to allow movement of the wear plate transverse to said gear shaft, and relief recesses in the periphery of said plates,

(f) a pair of balance assemblies, each one operatively associated with a wear plate and adjacent the surface of the wear plate opposite the wearing surface, each balance assembly including a seal member for sealing off the inlet from the outlet and developing an axial fluid force directed towards the wear plate for urging the wearing surface of the wearplate against the gears in order to maintain the volumetric efficiency of the apparatus, and

(g) substantially rigid and substantially unmoveable unitary load bearing and alignment means disposed inside said housing, spaced from said gears and between the respective bearings and balance assemblies and contacting said housing, bearings and respective end or adapter cover for maintaining said gears in a predetermined alignment with one another and for transmitting transverse loads on said end cover and housing to said adapter cover, whereby the transverse loads on said pump or motor are maintained in a state of equilibrium.

4,298,320
APPARATUS FOR DISPENSING AND MOLDING LINING MATERIAL INTO METALLIC CAP SHELLS
Hidehiko Ohmi, Hiratsuka, and Kazuhisa Ishibashi, Tokyo, both of Japan, assignors to Toyo Seikan Kaisha, Ltd., Tokyo, Japan
Filed May 28, 1980, Ser. No. 153,955
Claims priority, application Japan, Jun. 6, 1979, 54-69929
Int. Cl.³ B29D *31/00;* **B29C** *13/02*
U.S. Cl. 425—110 **3 Claims**

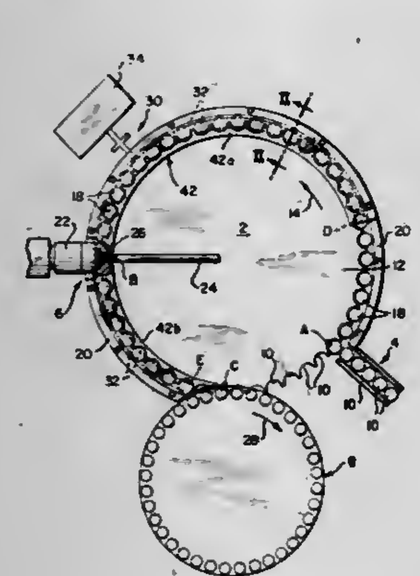

1. An apparatus for dispensing and molding a lining material into metallic cap shells where said apparatus has a conveyor mechanism for conveying cap shells at a predetermined speed through a conveyor passage extending from a cap shell supply station through a lining material dispensing station and onto a cap shell transfer station, a supply mechanism for supplying cap shells to said conveyor mechanism at the shell supply station, a lining material dispensing mechanism for dispensing a predetermined amount of lining material into the cap shells at the lining material dispensing station, and a molding mechanism for receiving the cap shells from said conveyor mechanism at the cap shell transfer station and for molding the lining material in the cap shells into a predetermined shape; the improvement comprising in having a high frequency induction heater for heating cap shells conveyed between said shell supply station and said lining material dispensing station and conveyed between said lining material dispensing station and said shell transfer station, said high frequency induction heater comprising a heating coil extending along the conveyor passage between said shell supply station and said lining material dispensing station and between said lining material dispensing station and said shell transfer station with the coil facing toward the top panels of the cap shells being conveyed through said conveyor passage, in that said coil is positioned further from said conveyor passage at said lining material dispensing station than from said conveyor passage extending between said shell supply station and said liner material dispensing station and from said conveyor passage extending between said liner material dispensing station and said shell transfer station, in having a high frequency oscillator for supplying a high frequency current to said heating coil, in having a guide plate extending along said conveyor passage between said shell supply station and said lining material dispensing station and between said lining material dispensing station and said shell transfer station and extending over and towards skirt edges of cap shells being conveyed through said conveyor passage and in that there is a gap in said guide plate at said liner material dispensing station.

4,298,321
EQUIPMENT FOR THE INJECTION MOLDING OF MOTOR VEHICLE TIRE TREADS
Achille Gallizia, Milan, Italy, assignor to Societa' Pneumatici Pirelli, Milan, Italy
Division of Ser. No. 860,304, Dec. 14, 1977, Pat. No. 4,166,832. This application Apr. 25, 1979, Ser. No. 33,166
Claims priority, application Italy, Dec. 30, 1976, 30985 A/76
Int. Cl.³ B29D *3/02;* **B29H** *3/08*
U.S. Cl. 425—120 **8 Claims**

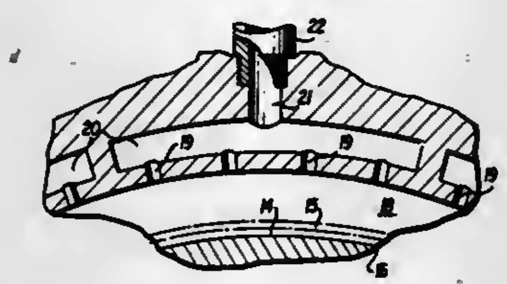

1. An apparatus for injection molding an elastomeric composition to form a tread on a body of a pneumatic tire comprising
means providing a source of elastomeric composition,
molding means defining a mold cavity for shaping the said elastomeric composition into the configuration of a tread on said body,
means connecting said source means with said mold cavity for injection of the elastomeric composition into the mold cavity, said connecting means defining a plurality of equalization chambers arranged substantially symmetrically around the mold cavity and between the said source and mold cavity,
means defining a plurality of feeding channels connecting the said source means to the said equalization chambers for flow of elastomeric composition therebetween, said channels being arranged with substantially the same symmetry as the equalization chambers, and
means defining a plurality of injection passages connecting said equalization chambers to said mold cavity disposed symmetrically with the equalization chambers for injection of said elastomeric composition into the mold cavity, the number of said injection passages supplied with elastomeric composition per feeding channel and the ratio between the cross-sectional area of the feeding channels and the cross-sectional area of the injection passages being selected whereby the ratio between the gradient γ of the injection passages and the gradient γ of the relative feeding channel is not lower than 8.

4,298,322
VENTING MEANS FOR SCREW EXTRUDERS
Dietmar Anders, Hanover, and Manfred Dienst, Burgdorf, both of Fed. Rep. of Germany, assignors to Hermann Berstorff Maschinenbau GmbH, Hanover, Fed. Rep. of Germany
Filed May 23, 1980, Ser. No. 152,692
Claims priority, application Fed. Rep. of Germany, Jun. 2, 1979, 2922572
Int. Cl.³ B29F *3/03*
U.S. Cl. 425—147 **5 Claims**

1. A venting assembly adapted for use with a screw extruder of the type having a cylinder, a feed hopper, a screw within said cylinder, and an extrusion orifice, said venting assembly comprising:
(a) a venting aperture formed in said cylinder intermediate said feed hopper and said extrusion orifice;
(b) a venting shaft extending radially outwardly from said venting aperture and being operatively connected to said cylinder so that the radially inner end of said shaft communicates with said venting aperture, said venting shaft being formed with a discharge orifice spaced from said venting aperture;

(c) a pipe operatively connected to said shaft around said discharge orifice, said pipe communicating with a source of low pressure;
(d) a covering flap adjacent said discharge orifice and adapted to close the same, and means for pivotally mounting said flap, the configuration and mounting of said flap

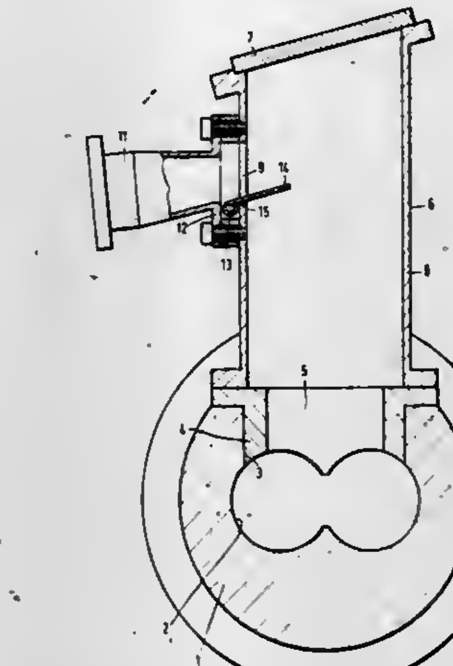

being such that said flap normally projects through said discharge orifice into said venting shaft, said flap, consequent to a rise of material in said shaft sufficient to contact the underside of said flap, pivoting to cut off communication between said discharge orifice and said pipe thereby precluding material from entering said pipe.

4,298,323
APPARATUS FOR MOLDING LAMINATED FOAM-BODY PANELS
Leo A. Haydt, Jr., Mountaintop, Pa., assignor to Precision Tool & Machine, Inc., Mountaintop, Pa.
Filed Mar. 3, 1980, Ser. No. 126,784
Int. Cl.³ B29D *27/04;* **B32B** *5/20, 31/06*
U.S. Cl. 425—162 **15 Claims**

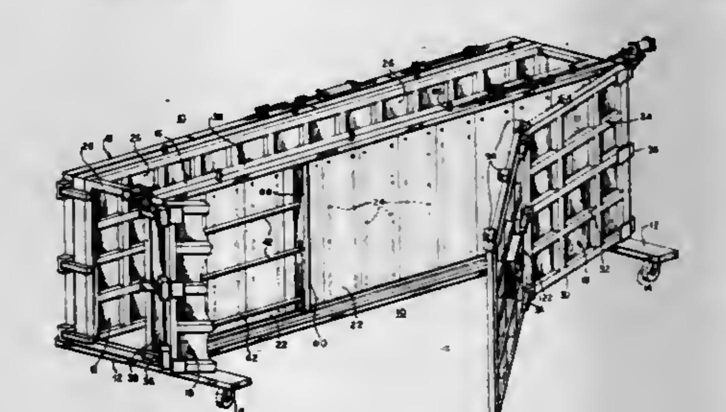

1. An apparatus for molding laminated, foam-body panels comprising:
first and second walls, said first wall including means for heating said foam during molding and said second wall comprising access doors;
a first set of at least two adjustable holding and shaping means adapted to engage and form at least two edges of said panels, and disposed angularly adjacent to each other;
a second set of holding and shaping means adapted to engage and form all remaining edges of said panels and disposed angularly adjacent to each other, said first and second walls and said first and second sets of holding and shaping means defining a molding cavity therebetween;
means for simultaneously positioning said first set of adjustable holding and shaping means;
first movable locking means for said first set of holding and shaping means;
second movable locking means for holding said access doors closed flat;
means for actuating and disengaging said first and second locking means, said first locking means being automatically actuated in response to said positioning means; and,
means for filling said cavity with unmolded foam material.

4,298,324
APPARATUS FOR MOLDING PARTICULATE EXPANDABLE THERMOPLASTIC RESIN MATERIAL USING MICROWAVE HEATING
Joël Soulier, Ivry La Bataille, France, assignor to Isobox-Barbier, Bannalec, France
Continuation of Ser. No. 842,314, Oct. 14, 1977, abandoned. This application Sep. 21, 1979, Ser. No. 77,783
Claims priority, application France, Sep. 9, 1977, 77 27302
Int. Cl.³ B29D *27/00*
U.S. Cl. 425—174.8 E **18 Claims**

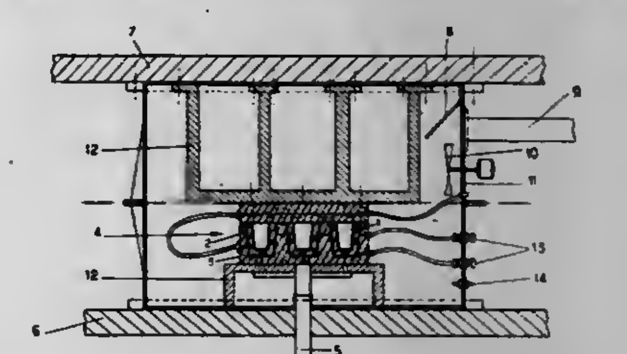

1. A device for molding particulate expansible plastic dielectric material by microwave radiation, which comprises:
a mold body, in combination with a press and a resonant cavity having wall members wherein the mold body includes a first portion comprising wall surfaces which define the mold cavity and which contact said plastic material to be molded said portion being formed of a resin containing microwave radiation-conducting carbon black which has high dielectric losses and which is microwave-absorbent and wherein the remaining portion of the mold body is made of a material which is essentially transparent to or transmissive of microwave radiation; and
means for applying microwave radiation to said mold body.

4,298,325
DIE FOR THE EXTRUSION OF MATERIAL IN TUBE FORM
Robert J. Cole, 224 St. George St., Apt. 501, Toronto, Ontario, Canada (M5R 2N9)
Filed Mar. 24, 1980, Ser. No. 133,386
Int. Cl.³ B29F *3/04*
U.S. Cl. 425—192 R **7 Claims**

1. A die for the extrusion of material in tube form comprising:
a first cylindrical die member having a respective first longitudinal axis, having a lip portion thereof providing an inner circular die lip of an annular die orifice concentric with the said axis and having a first axially-extending cylindrical surface concentric with the said axis;
a second cylindrical die member having a respective second longitudinal axis coaxial with the first longitudinal axis, having a lip portion thereof providing an outer circular die lip of the said annular die orifice, and having a second axially-extending cylindrical surface concentric with the said axis, the said first and second axially-extending cylindrical

surfaces being of different diameter and facing in opposite radial directions; and

an annular member of a material of a higher coefficient of expansion than that of the first and second cylindrical members, interposed between and engaged with the said first and second axially-extending cylindrical surfaces, so that upon increase in temperature thereof it expands radially to a

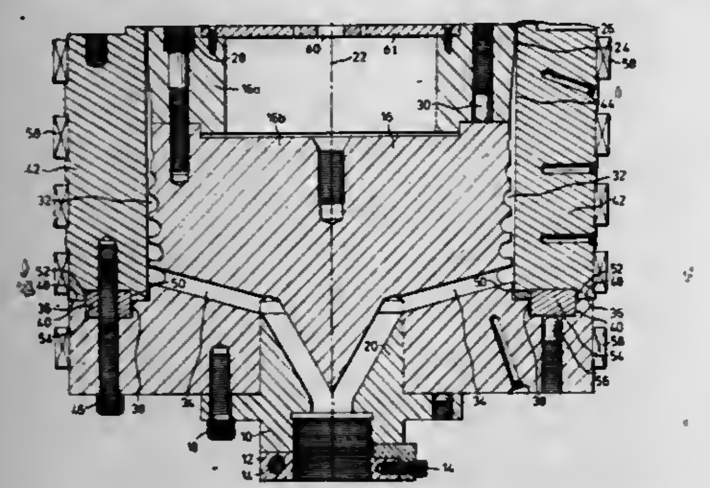

greater extent than the material of the first and second cylindrical members so as to apply oppositely-directed, radially-acting forces to the said first and second axially-extending cylindrical surfaces to thereby maintain the relative radial positions of the two members and maintain the uniformity of the radial dimension of the annular die gap around its circumference.

4,298,326
MOLDING APPARATUS

Gerald J. Orlowski, Scottsdale, Ariz., assignor to Armour and Company, Phoenix, Ariz.

Continuation of Ser. No. 863,713, Dec. 23, 1977, abandoned, which is a division of Ser. No. 705,160, Jul. 14, 1976, Pat. No. 4,065,241. This application Oct. 4, 1979, Ser. No. 81,829

Int. Cl.^{3} A22C *7/00*

U.S. Cl. 425—219 2 Claims

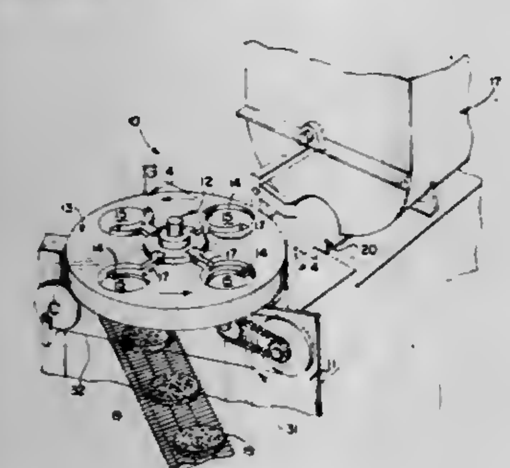

1. In an apparatus for forming a plurality of uniformly-shaped patties from a mass of agglomerable edible material; said apparatus including:

a frame;

a drive means retained on said frame;

a hopper attached to said frame for receiving a mass of said edible material;

a turret rotatably mounted to said frame and drivingly connected to said drive means including a plurality of cavities located in spaced angular and radial relation therearound, each cavity having a barrier means mounted for reciprocal movement axially therein, each said barrier means having a bottom surface coacting with a cavity to form a mold;

an improvement including housing means having means therein positioned between said hopper and turret for moving said edible material through said hopper and substantially upwardly into said mold, filling it, and forming a patty therein as each mold opening is positioned in substantially complete communication with an enlarged opening on said housing means during an arcuate portion of each turret rotation;

said enlarged opening in said housing including a shallow dished portion which extends from a central portion of said opening substantially along said arcuate path of travel and becomes increasingly shallow as it so extends for directing all the edible material from said housing means upwardly into said mold cavity when same is fed therethrough while preventing stagnation and retention of said edible material on said dished portion;

means coacting with the turret for reciprocating said barrier means through said cavity as said turret rotates to push a patty substantially downwardly out therefrom at a portion of rotation substantially opposite the patty-forming portion; and

means connected to the frame for separating a patty from said barrier means in a manner preventing its deformation during separation;

said means for reciprocating said barrier means through said cavity moving said barrier means from the lowest position in its path of travel to the highest position in its path of travel during the portion of said turret rotation when said mold opening is in communication with said housing means, and said reciprocation means moving said barrier means upwardly through said cavity at a rate of speed sufficient to draw said edible materials therein.

4,298,327
DEVICE FOR THE MANUFACTURE OF ROD-SHAPED OBJECTS OF DOUGH-LIKE, PARTICULARLY EDIBLE, MATERIAL

Wilhelmus F. A. Koppens, Bakel, Netherlands, assignor to Koppens Machinefabriek B.V., Bakel, Netherlands

Filed May 19, 1980, Ser. No. 150,723

Claims priority, application Netherlands, May 23, 1979, 7904048

Int. Cl.^{3} A21C *11/00*

U.S. Cl. 425—344 7 Claims

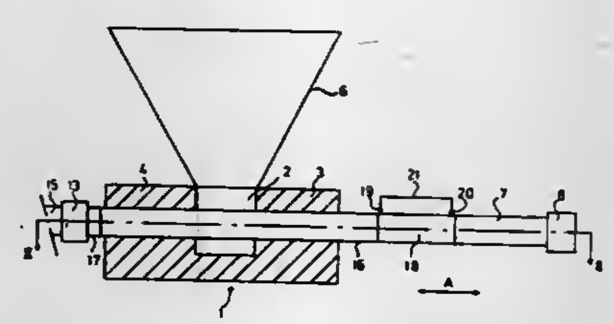

1. A device for the manufacture of rod-shaped objects of dough-like material, for example, croquettes, characterized in that the device comprises a supply chamber for receiving the material and communicating with a passage located in a housing in which a first plunger is adapted to reciprocate, said first plunger being displaceable between a first position in which it completely fills the passage and a second position in which it is located outside the passage and the supply chamber, whilst a second plunger is also adapted to reciprocate in line with the first plunger and is displaceable between a first position in which the end of the second plunger facing the first plunger is located in the supply chamber and a second position in which said end of the second plunger has passed through said passage and is also located outside the supply chamber, and a drive member fixed to said first plunger for moving it from its first to its second position, the drive member including means for moving the second plunger in the same direction as the first plunger after a given time delay, the second plunger being responsive to the displacement of the first plunger from its second to its first position for moving the second plunger from its second to its first position.

4,298,328
EXTRUSION APPARATUS FOR PREVENTING THE DISTORTION OF PERIPHERAL CELLS IN EXTRUDED HONEYCOMB STRUCTURES

Rodney I. Frost, Corning, N.Y., assignor to Corning Glass Works, Corning, N.Y.

Filed May 12, 1980, Ser. No. 148,823

Int. Cl.^{3} B29F *3/04*

U.S. Cl. 425—376 A 8 Claims

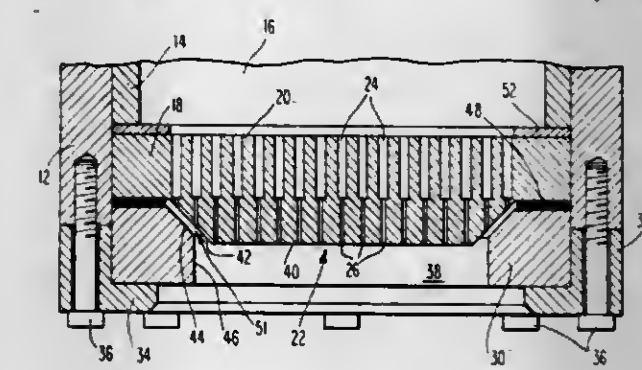

1. An apparatus for extruding a honeycomb structure comprising:

a die body having an inlet surface, an outlet surface, a plurality of feed passageways opening to said inlet surface, and a plurality of discharge slots communicating with said feed passageways and opening to said outlet surface, the extrusion direction being from said inlet surface to said outlet surface along the longitudinal axes of said passageways and slots, said outlet surface being beveled to have

a central primary face substantially perpendicular to the extrusion direction, and

a surrounding face continuously converging in said extrusion direction to said primary face, and an imaginary extension of said surrounding face further continuously converging in said extrusion direction forming an acute angle between said extension of the surrounding face and said primary face;

an extrusion mask having a central orifice for receiving said extruded structure, said orifice being defined by

an exit face substantially parallel to the extrusion direction, and

an imperforate entrance face converging in said extrusion direction to meet the exit face, and an imaginary extension of said entrance face further converging in said extrusion direction forming said acute angle between said extension of the entrance face and said primary face; and

spacing means for mating said entrance face with said surrounding face in parallel spaced apart relation to form a gap of uniform width therebetween and opening about the periphery of said orifice.

4,298,329
SIZING MANDREL FOR THERMOPLASTIC NETTING

Charles T. Keller, Tonawanda, N.Y., assignor to E. I. Du Pont de Nemours and Company, Wilmington, Del.

Filed May 27, 1980, Ser. No. 153,206

Int. Cl.^{3} A01J *21/02*

U.S. Cl. 425—382 N 3 Claims

1. A mandrel for sizing extruded cylinders of thermoplastic netting flowing downstream to the mandrel from an upstream extrusion die, the mandrel comprising a hollow tube of substantially circular cross-section having at least one longitudinal aperture formed therein and a transverse guide means attached thereto at a position upstream from the longitudinal aperture, a rod slidably positioned within the tube, the rod having a conical element rigidly connected thereto exterior to the tube and through the longitudinal aperture in the tube, the apex of the conical element being in the upstream position, the mandrel further comprising an exterior cylindrical forming element of at least two radial sections positioned

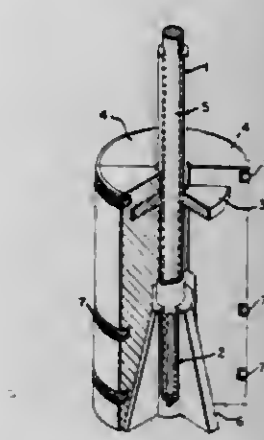

around and slidably engaged with the guide means and the conical element, the radial sections being retained by at least two circumferential expandable bands.

4,298,330
CURVED MANDREL FOR CURING POLYMERIC HOSE AND METHOD

Richard F. Davis, Waynesville, N.C., assignor to Dayco Corporation, Dayton, Ohio

Filed Oct. 22, 1979, Ser. No. 86,984

Int. Cl.^{3} B29H *5/18*

U.S. Cl. 425—392 15 Claims

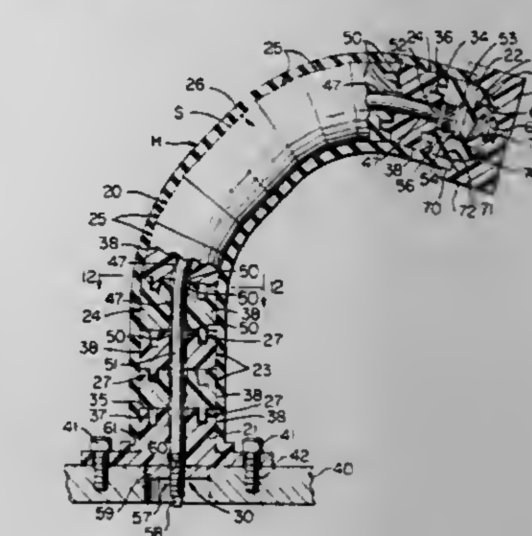

1. A mandrel for supporting an uncured polymeric hose during curing to define a curved configuration in the resulting cured hose comprising:

(a) a plurality of cylindrical members disposed in end-to-end relation, each of said members having opposed end faces, said members comprising a first type having end faces disposed in parallel relation and a second type having end faces disposed in non-parallel relation;

(b) means interlocking said members;

(c) readily attachable and detachable holding means for holding said members axially against each other;

said members with said interlocking means and said holding means being adapted to provide a substantially straight position of said mandrel for easy installation of an uncured straight hose therearound; to provide a predetermined curved configuration position of said mandrel for curing said hose and to provide looseness and axial spacing between said members to enable easy withdrawal of the resulting cured curved hose from around said members.

4,298,331
CONTAINER FABRICATING MACHINE
Martin Mueller, Wonderlake, Ill., assignor to Owens-Illinois, Inc., Toledo, Ohio
Filed Nov. 9, 1979, Ser. No. 92,892
Int. Cl.³ B29C *27/00*
U.S. Cl. 425—393 25 Claims

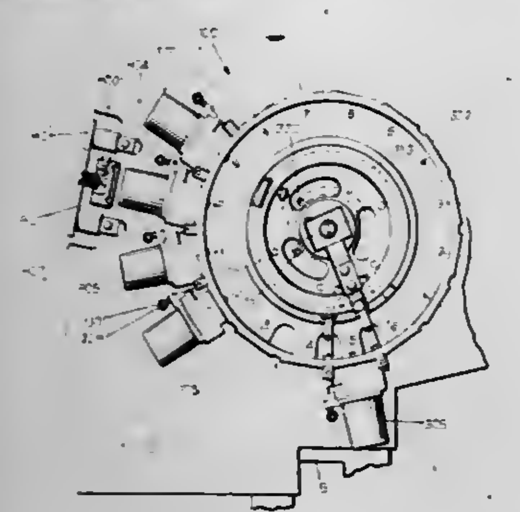

1. An apparatus for the manufacture of a container of heat-shrinkable thermoplastic material comprising sleeve winding means for forming an open ended sleeve with a liquid impervious side seam, drum means, mounted for rotation about a horizontal axis, positioned adjacent to said sleeve winding means and supporting a plurality of container mandrels each in radial alignment with said drum means, sleeve transfer means for transporting said sleeve from the sleeve winding means to one of the mandrels on said drum means, an array of heat dispensing means positioned adjacent said drum means for heat softening and shrinking said sleeve into partial conformity with the exterior surface of the mandrel supporting said sleeve, means for pressing a portion of the heat softened sleeve into an end closure for said container and container ejection means for removing said container from said mandrel.

11. A machine for the manufacture of cup-shaped containers of heat-shrinkable oriented thermoplastic material comprising a base structure and sleeve winding means positioned thereon for forming an open ended sleeve with a liquid impervious side seam, an upright support column attached to said base structure motor means attached to said column, rotatable cylindrical drum means with a horizontal axis of rotation mounted to said column and positioned adjacent said sleeve winding means, gear means connected between said motor means and said drum means for rotating said drum means, a plurality of outwardly cantilevered container mandrels attached to said drum means, sleeve transfer means for transporting said sleeve from the sleeve winding means to said container mandrels, heat dispensing means positioned adjacent said drum means for heat softening and shrinking said sleeve into partial conformity with the container mandrel supporting said sleeve, means for forming a portion of the heat softened sleeve into an end closure for said container and container removal means for removing said container from said mandrel.

4,298,332
NOZZLE DEVICE FOR MOLDING PLASTICS
Katashi Aoki, 6037 Ohaza-Minamijo, Sakaki-machi, Hanishina-gun, Nagano-ken, Japan
Division of Ser. No. 27,021, Apr. 4, 1979. This application Jan. 22, 1980, Ser. No. 114,228
Claims priority, application Japan, Apr. 8, 1978, 53-46344
Int. Cl.³ B29F *1/03*
U.S. Cl. 425—570 4 Claims

1. A mold clamping mechanism comprising:
a fixed plate extending in a transverse direction and having a core mold secured thereto, said fixed plate being adapted to receive mold clamping pressure;
a transversely extending first plate slidable in a longitudinal direction with respect to said fixed plate;
a cavity mold secured to said first plate on a side thereof facing said fixed plate and being slidable therewith, said cavity mold being adapted to mate with said core mold and having cavity mold gates opening on a side of said first plate facing away from said fixed plate;
a transversely extending second plate associated with said first plate on a side of said first plate facing away from said fixed plate, said second plate being slidable in said longitudinal direction with respect to said fixed plate and with respect to said first plate;
a runner block affixed to said second plate on a side thereof facing said cavity mold, said runner block having nozzles adapted to engage said cavity mold gates and a sprue

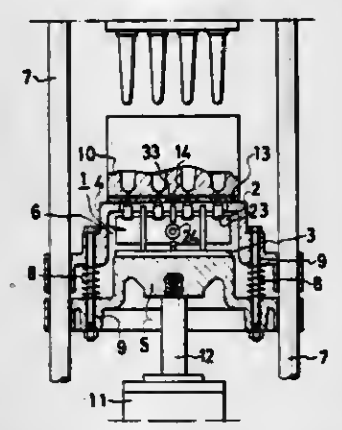

extending from a side of said runner block in a direction generally nonparallel to said longitudinal direction, said sprue being adapted to accept an injection cylinder moving generally in said nonparallel direction;
means for limiting the separation of said second plate from said first plate in said longitudinal direction to a predetermined distance;
plunger means movable in said longitudinal direction for urging said second plate against said first plate to drive said nozzles into associated ones of said cavity mold gates and for driving said cavity mold into a mating relationship with said core mold, and for subsequently retracting said cavity mold from said core mold; and
means for separating said first plate from said second plate said predetermined distance upon retraction of said cavity mold from said core mold to permit withdrawal of said nozzles from said cavity mold gates.

4,298,333
INDUSTRIAL HEATING INSTALLATION AND METHOD OF OPERATION
Joachim Wunning, Leonberg, Fed. Rep. of Germany, assignor to J. Aichelin, Korntal b. Stuttgart, Fed. Rep. of Germany
Filed Sep. 11, 1978, Ser. No. 941,263
Claims priority, application Fed. Rep. of Germany, Sep. 19, 1977, 2742070
Int. Cl.³ F23D *11/44*
U.S. Cl. 431—11 15 Claims

1. A heating installation system for heating of industrial ovens or furnaces employing gaseous or liquid fuels comprising:
a fuel line (6, 7);
a burner (5);
means (8, 19) controlling fuel flow to the burner;
fuel flow resistance control means (24) included in said fuel line (6, 7) and rendering the fuel flow through-put to the burner essentially temperature independent;
an air supply line (11);
means (12, 25) controlling air flow through the air supply line and causing a pressure drop in the air flow therethrough;
the burner (5) being connected to the fuel line and to the air supply line;
and a recuperator (15) having a supply air pressure (10) and being attached to the burner and providing for counter-current heat exchange of supply air and of exhaust gases, said recuperator supply air passage being dimensioned and arranged to form an air throttle of choke having a pronounced frictional gas flow resistance opposing the flow

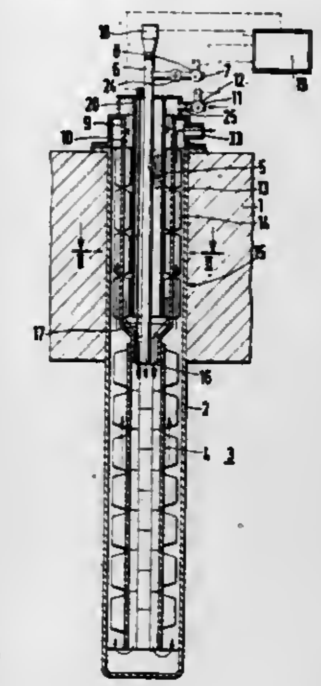

of supply air therethrough resulting in a pressure differential between the ends of the recuperator which is a substantial portion of the total pressure drop of supply air through said air flow control means and said recuperator to the burner, said pressure differential increasing with temperature and thereby concurrently causing a decrease in the air supply to the burner and thus self-regulating the air-fuel ratio.

4,298,334
DYNAMICALLY CHECKED SAFETY LOAD SWITCHING CIRCUIT
Rodney L. Clark, Burnsville; Kenneth B. Kidder, Coon Rapids, and Gary A. Peterson, New Brighton, all of Minn., assignors to Honeywell Inc., Minneapolis, Minn.
Filed Nov. 26, 1979, Ser. No. 97,471
Int. Cl.³ F23Q *23/00*
U.S. Cl. 431—24 10 Claims

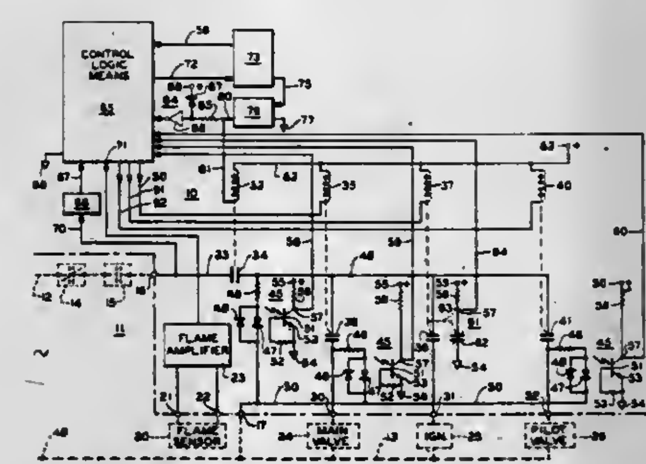

1. A condition control system adapted to be connected to load means to operate said load means in a safe manner, including: safety relay means controlled by solid state switching means and including contact means with said contact means connected in a series energizing circuit for said load means; load relay means having load contact means connected to energize said load means in response to said condition control system; said load contact means connected intermediate said safety contact means and said load means so that either said safety contact means or said load contact means can deenergize said load means; control logic means connected to control said solid state switching means to in turn control said safety relay means; said control logic means further connected to control said load relay means to operate said load means; and feedback interface means connecting said solid state switching means and said control logic means; said control logic means periodically changing the state of energization of said solid state switching means and said safety relay means; said control logic means verifying the operation of said solid state switch means from said feedback interface means prior to said safety relay means physically operating; said control logic means restoring the original state of energization of said safety relay means before said safety relay means is capable of physically operating upon verifying from said feedback interface means that said solid state switching means had properly operated.

4,298,335
FUEL BURNER CONTROL APPARATUS
William J. Riordan, Shrewsbury, Mass., and Richard A. Cunha, North Grosvenordale, Conn., assignors to Walter Kidde and Company, Inc., Clifton, N.J.
Filed Aug. 27, 1979, Ser. No. 70,164
Int. Cl.³ F23N *5/12*
U.S. Cl. 431—25 15 Claims

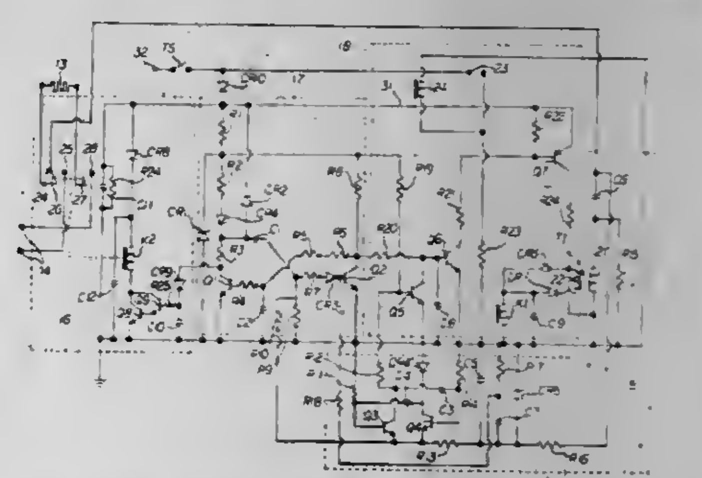

1. Fuel burner control system comprising:
valve means for controlling the flow of fuel to a burner;
a resistive heater element for igniting fuel emanating from the burner;
power supply means for supplying current to said resistive heater element;
start-up means for opening said valve means to provide fuel to said burner for ignition by said heater element;
electrode means spaced from said heater element in a zone occupied by flame emanating from the burner;
flame sensing circuit means comprising ac source means having a first terminal connected to said electrode means and a second terminal connected to said heater element, and detector means for producing an output signal only in response to the flow between said electrode means and said heater element of current rectified by the flame;
valve control circuit means for maintaining said valve means open in response to said output signal; and
coupling circuit means interconnecting said heating element with said power supply means and said sensing circuit means, said coupling circuit means adapted to prevent the flow of current between said power supply means and said sensing circuit means.

4,298,336

PILOT BURNER IGNITION MEANS AND METHOD OF MAKING THE SAME

Fred Riehl, Greensburg, Pa., assignor to Robertshaw Controls Company, Richmond, Va.

Filed Sep. 10, 1979, Ser. No. 73,673

Int. Cl.³ F23Q *3/00*

U.S. Cl. 431—264 **12 Claims**

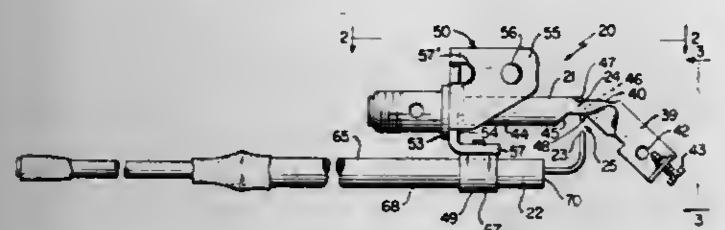

1. In a combination of a pilot burner having means for issuing fuel out of an outlet means thereof and being supplied thereto from a source of said fuel and an electrical probe having an end spaced from said outlet means of said pilot burner to provide a spark gap therewith and through which an electrical sparking is adapted to take place to ignite said issuing fuel when said probe is interconnected to a source of electrical energy and said fuel is issuing from said outlet means, the improvement wherein said end of said probe is disposed beneath said outlet means, said pilot burner having a diffusion tang adjacent said outlet means, said end of said probe defining said spark gap with said tang, said tang having a free end disposed in the path of the fuel issuing from said outlet means, said end of said probe defining said spark gap with said free end of said tang, said free end of said tang and said end of said probe being disposed in substantially vertically aligned relation, said pilot burner being disposed substantially horizontal so that said fuel issues substantially horizontally out of said outlet means until it impinges against said tang, said probe being disposed substantially horizontal in spaced parallel relation to said pilot burner, said end of said probe being bent at substantially a right angle to said probe and extending substantially vertically upwardly toward said free end of said tang, said tang being bent at substantially a right angle to said pilot burner and extending substantially vertically downwardly toward said end of said probe.

4,298,337

FUEL BURNER HAVING FLAME STABILIZATION BY INTERNAL RECIRCULATION

G. Theodore Butler, Orlando; Travis G. Porter, Winter Garden, and Harold E. Fisher, Altamonte Springs, all of Fla., assignors to Mechtron International Corporation, Orlando, Fla.

Filed Apr. 23, 1979, Ser. No. 32,135

Int. Cl.³ F23Q *9/00*

U.S. Cl. 431—285 **6 Claims**

1. A fuel burner having a controlled size combustion volume comprising:

air pressurization means for introducing combustion air under pressure into said combustion volume, said air pressurization means includes a turbo blower and air flow directing means for directing said pressurized air into said combustion volume;

means for introducing atomized liquid fuel into the combustion volume and for mixing with the combustion air to produce a flame;

aerodynamic stabilization means for producing aerodynamic stabilization of the flame within said combustion volume by reducing the velocity of combustion gases within the flame to less than the flame propagation velocity, said aerodynamic stabilization means having air rotation means disposed adjacent to said combustion volume for causing rotation of said pressurized air from said turbo blower arranged to cause said air to enter said combustion volume in a swirling motion having a less-than-atmospheric pressure zone in the central portion thereof to cause internal recirculation of combustion gases in said combustion volume to thereby reduce the velocity of said combustion gases to less than the flame propagation velocity;

size controlling means for introducing additional combustion air into said combustion volume to limit the size thereof, said size controlling means having air aspiration

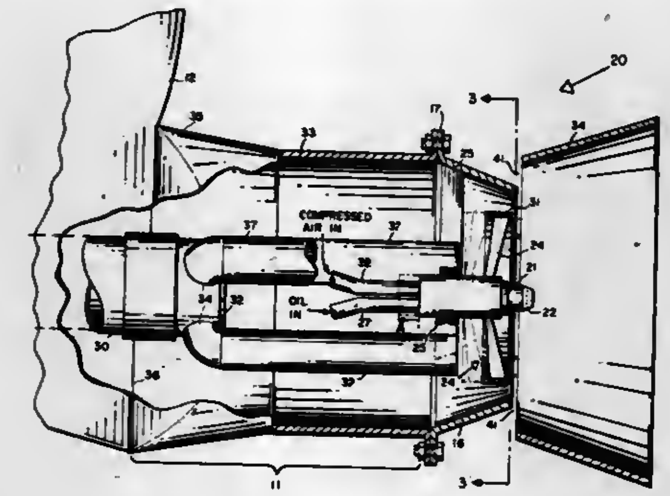

control means surrounding said combustion volume for controlling introduction of outside air into said combustion volume to prevent the dimunition of such less-than-atmospheric pressure zone; and

at least one gas discharge tube positioned for injecting a gas fuel into said aerodynamic stabilization means whereby a gas fuel can be mixed with combustion air.

4,298,338

LIQUID FUEL BURNERS

Robert S. Babington, McLean, Va., assignor to Owens-Illinois, Inc., Toledo, Ohio

Filed May 8, 1979, Ser. No. 37,190

Int. Cl.³ F23D *15/04*

U.S. Cl. 431—352 **13 Claims**

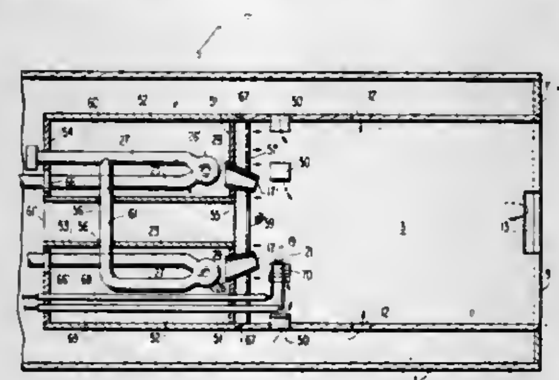

1. A liquid fuel burner comprising:

a flame tube having an inlet end and an outlet end,

an atomizing chamber communicating with said inlet end of said flame tube and enclosing fuel atomizing means for discharging atomized fuel into said flame tube through openings in a dividing wall separating said flame tube from said atomizing chamber,

said atomizing means comprising a plurality of hollow plenum chambers each having a smooth outer surface and each defining therein a small through aperture, a means for producing a flow of fuel in a thin film over each said through aperture and a means for introducing air under pressure into each said plenum chamber to rupture said film at said aperture,

means for supporting said plenum chambers in said atomizing chamber in a manner to cause the plurality of directional streams of atomized fuel issuing therefrom to be directed through respective ones of said openings in said dividing wall into said flame tube in directions extending toward and along the central axis of said flame tube for combustion of substantially all said atomized fuel within said flame tube,

means for introducing air into said atomizing chamber to thereby cause low velocity air to issue through said openings in said dividing wall along with said streams of atomized fuel and said pressurized air issuing from each said plenum chamber,

means for igniting the atomized fuel in said flame tube downstream of its said inlet end,

first means for introducing air into said flame tube adjacent its inlet end with a tangential component to produce in said flame tube a single tangential vortex to promote the admixing of air with the atomized fuel and to maintain the flame spaced from the flame tube's inner surface adjacent its inlet end,

and second means for introducing air into said flame tube at at least one location downstream of the location of air introduction by said first means and downstream of the point of ignition of the fuel-air mixture by said ignition means with a velocity and direction to impede the tangential vortex generated by said first means so as to permit the flame to expand to the flame tube wall and to permit substantially complete combustion within the confines of the flame tube.

4,298,339

METHOD OF HEAT TREATING A MATERIAL

Arthur A. Randell, Tewkesbury, England, assignor to Coal Industry (Patents) Limited, London, England

Filed Oct. 16, 1979, Ser. No. 85,412

Claims priority, application United Kingdom, Nov. 14, 1978, 44452/78

Int. Cl.³ F27B *15/00*

U.S. Cl. 432—15 **5 Claims**

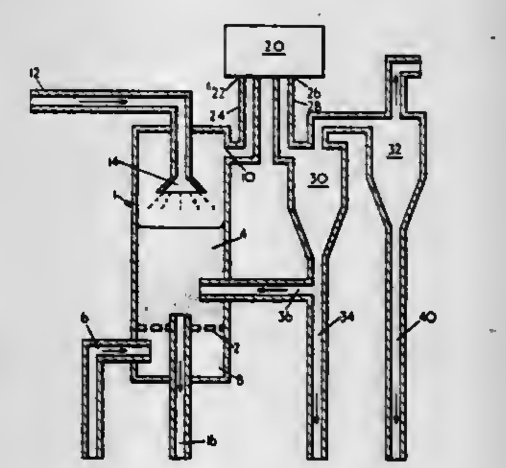

1. A method for the thermal treatment of a slurry material having combustible and incombustible components, including the steps of spraying the material onto a fluidised bed, burning the combustible components at least in part in the fluidised bed, the water being volatilised, maintaining the fluidised bed at a temperature below that at which the solids components sinter, separating solids material from gases issuing from the fluidised bed, feeding the separated material back into the bed, and reintroducing the separated material at a position located in a central zone of the fluidised bed laterally thereof beneath the incoming spray thereby to suppress at least some material elutriated from the bed.

4,298,340

METHOD AND APPARATUS FOR PRODUCING A HYDRAULIC BINDER

Horst Herchenbach, Troisdorf, Fed. Rep. of Germany, and Bartl Lechner, Kufstein, Austria, assignors to Klöckner-Humboldt-Deutz AG, Fed. Rep. of Germany

Division of Ser. No. 27,035, Apr. 4, 1979, Pat. No. 4,236,932. This application Apr. 22, 1980, Ser. No. 142,705

Claims priority, application Fed. Rep. of Germany, Apr. 7, 1978, 2815161

Int. Cl.³ F27B *15/00*

U.S. Cl. 432—58 **7 Claims**

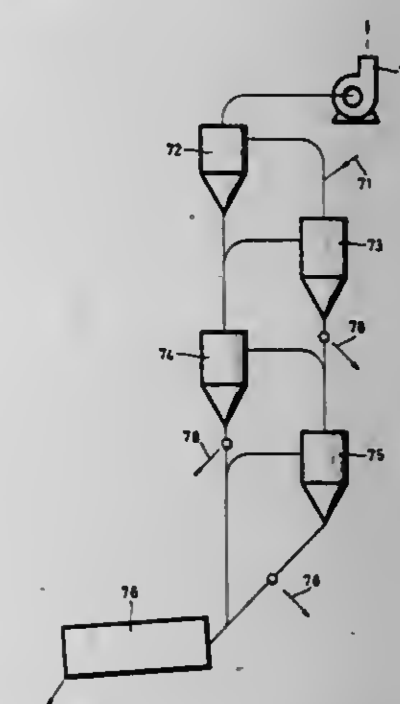

1. An apparatus for production of a hydraulic binder which comprises:

means defining a preheating zone for particulate material used in the manufacture of cement, said preheating zone including a plurality of sequential stages each stage providing a progressively greater degree of deacidification to the raw material passing therethrough,

means for introducing raw material into said preheating zone,

means defining a calcining zone receiving the preheated output of said preheating zone, and

discharge means between said preheating zone and said calcining zone for withdrawing a portion of the preheated material of a predetermined degree of deacidification which is less than complete deacidification.

4,298,341

INDUSTRIAL OVEN HAVING AIR RECIRCULATING MEANS FOR MINIMIZING HEAT LOSS

William C. Nowack, Rte. 2, Box 256-2A, Lake Geneva, Wis. 53147

Filed Mar. 21, 1980, Ser. No. 132,495

Int. Cl.³ F24F *9/00*; F27D *7/00*

U.S. Cl. 432—64 **17 Claims**

1. An industrial oven for heat treating a series of articles, comprising

a tunnel enclosure having a tunnel space therein through which the articles to be heat treated may pass,

said tunnel enclosure having upper and lower walls and side walls,

said side walls including a terminal wall having an access opening through which the articles to be heat treated may pass,

conveyor means for carrying the articles through said access opening and said tunnel space,

heating means for supplying heat to said tunnel space to heat treat the articles,

a nozzle disposed within said tunnel enclosure near said upper wall and near said terminal wall for directing a stream of hot air downwardly across the access opening, said nozzle being angled downwardly into said tunnel space and away from said access opening to resist the escape of hot air from said tunnel space through said access opening,

an exhaust structure having an exhaust opening disposed within said tunnel enclosure at the upper wall thereof on

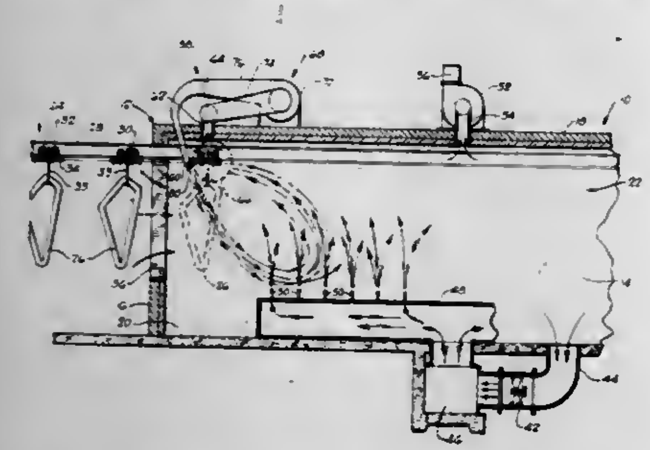

the side of said nozzle opposite the access opening to provide for the lowering of the air pressure in said tunnel space near the upper wall on the side of the nozzle remote from said access opening,

and air handling means for withdrawing hot air from said tunnel space through said exhaust opening while blowing hot air into said tunnel space through said nozzle for minimizing the escape of hot air from said tunnel space through said access opening.

4,298,342
AUTOMATIC BELT TENSIONER
Kenneth H. Clayton, Anderson; Charles D. Denniston, Middletown; Donald G. Guetersloh, Anderson, and Melvin H. Hallmann, Middletown, all of Ind., assignors to General Motors Corporation, Detroit, Mich.
Filed Dec. 10, 1979, Ser. No. 101,589
Int. Cl.³ F16H *7/12*
U.S. Cl. 474—110 **2 Claims**

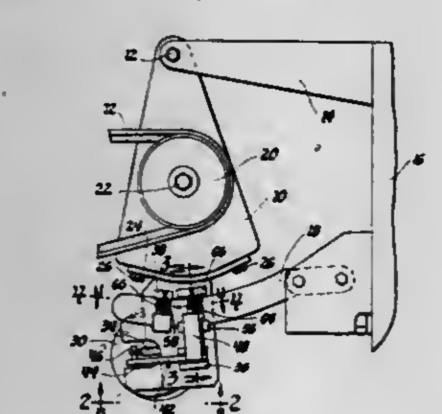

1. A belt tensioner comprising; stationary base means; pulley support means pivotally mounted on said base means; bracket means secured to said base means; pulley means rotatably mounted on said pulley support means; belt means trained on said pulley means; motor means secured to said pulley support means; lever means operatively connected to said motor means and having a pair of pivot axes; and cam means operatively connected to said pulley support means and said bracket means including gripping cam means pivotally and rotatably mounted on said pulley support means and being driven by said motor means through said lever means pivoting on the first of said pair of pivot axes to urge said pulley support means to pivot on said base means and move in one direction relative to said bracket means to increase the tension in said belt means, and locking cam means for engaging said bracket means to prevent relative movement between said pulley support means and said bracket means in the opposite direction while said lever means is pivoted on the second of said pair of pivot axes.

4,298,343
REINFORCED BELT SPLICE
John D. Redmond, Jr., Littleton, Colo., assignor to The Gates Rubber Company, Denver, Colo.
Filed Mar. 10, 1980, Ser. No. 128,749
Int. Cl.³ F16G *3/02*
U.S. Cl. 474—255 **7 Claims**

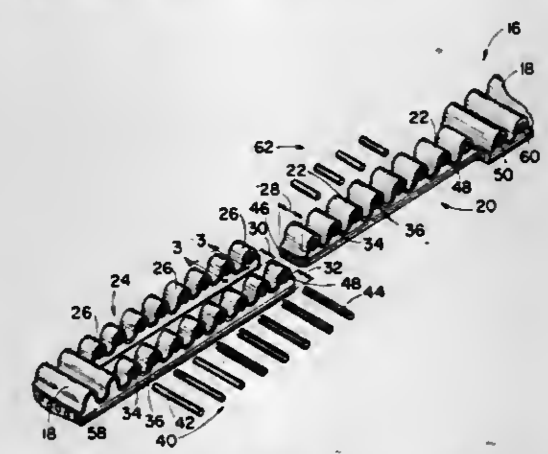

1. In a toothed power transmission belt with an elastomeric body severed to a desired width and having an embedded tensile member, the belt adapted for splicing to endless form and wherein the improvement comprises:

a male-end belt portion having a plurality of substantially parallel rods, each rod embedded in a belt tooth and unadhered to the body, the rods oriented with and severed at the belt width;

a female-end belt portion dimensioned to receive the male-end portion and having a plurality of substantially parallel rods, each rod embedded in a belt tooth and unadhered to the body, the rods of the female-end portion severed at the belt width and having axes arranged for coaxial alignment with axes of the male-end rods when the male-end portion is overlapped with the female-end portion; and

whereby said unadhered rods may be extracted from said ends to define a plurality of pin receiving openings.

CHEMICAL

4,298,344
AGE RESISTANT CHROME TANNING AGENTS
Herbert Knopf; Heinrich Spahrkäs, and Wolfhard Luck, all of Leverkusen, Fed. Rep. of Germany, assignors to Bayer Aktiengesellschaft, Leverkusen, Fed. Rep. of Germany
Filed Feb. 15, 1980, Ser. No. 121,863
Claims priority, application Fed. Rep. of Germany, Mar. 7, 1979, 2908967
Int. Cl.³ C14C *3/06*
U.S. Cl. 8—94.26 **4 Claims**

1. A pulverulent spray dried chrome tanning agent having about 1.8 to 2.6 mols of formate/mol Cr_2O_3, a basicity of at least about 42% and a sulphate content of at least about 1.8 mols SO_3/mol Cr_2O_3.

4,298,345
METHOD AND APPARATUS FOR CHEMICAL SPOT TEST ANALYSIS
Lester A. Sodickson, Newton, Mass., and Franklin Lim, Richmond, Va., assignors to Damon Corporation, Needham Heights, Mass.
Division of Ser. No. 853,435, Nov. 21, 1977, Pat. No. 4,178,153. This application Mar. 30, 1979, Ser. No. 25,497
Int. Cl.³ G01N *1/14, 21/27*
U.S. Cl. 23—230 R **15 Claims**

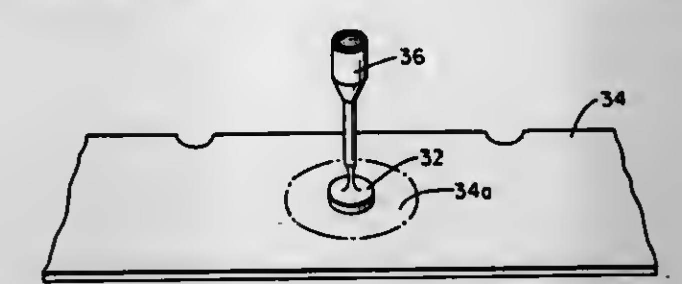

1. A method for preparing a porous medium for use in chemical spot test analysis employing a measured parameter responsive to concentration of a reaction-produced material at a test site on the porous medium, said method including the improvement comprising the step of exposing at least said test site of said medium to a liquid preparation conditioning agent having a balance of hydrophobic and hydrophilic properties for retarding the spreading of liquid in the medium and for increasing the concentration of liquid the medium can hold, said exposure being sufficient, after drying, to diminish the absorption of liquid by the porous structure of said medium.

4,298,346
VIRUS HEMAGGLUTINATION-INHIBITION REACTION
Homu Ito, Nagaokakyo, Japan, assignor to Takeda Chemical Industries, Ltd., Osaka, Japan
PCT No. PCT/JP79/00010, § 371 Date Oct. 6, 1979, § 102(e) Date Jan. 29, 1979, PCT Pub. No. WO79/00675, PCT Pub. Date Sep. 20, 1979
PCT Filed Jan. 17, 1979, Ser. No. 85,641
Claims priority, application Japan, Feb. 6, 1978, 53-12655; Oct. 11, 1978, 53-125434
Int. Cl.³ G01N *33/48*
U.S. Cl. 23—230 B **3 Claims**

1. In an arbovirus hemagglutination-inhibition test reaction which comprises pretreating a test serum for an arbovirus hemagglutination-inhibitors, mixing the pretreated test serum with an arbovirus-specific hemagglutinating antigen and then adding erythrocytes to assess occurrence of hemagglutination, the improvement which comprises (1) pretreating the test serum with a composition containing both fixed avian erythrocytes and kaolin particles, (2) employing the fixed avian erythrocytes as the erythrocytes to be agglutinated, and (3) diluting, respectively, the pretreated test serum, the arbovirus-specific hemagglutinating antigen and the fixed avian erythrocytes with a single common buffer in the pH range of 6.6 to 12.0.

4,298,347
$^{13}CO_2$ BREATH TEST
Fraser M. Walsh, Arlington, Mass., assignor to Kor Incorporated, Cambridge, Mass.
Filed Feb. 25, 1980, Ser. No. 124,341
Int. Cl.³ G01N *33/52*
U.S. Cl. 23—230 B **2 Claims**

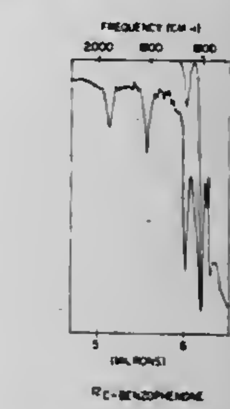

1. A method for the analysis of mass-labeled carbon dioxide in exhaled air containing a mixture of $^{12}CO_2$ and $^{13}CO_2$ comprising:

contacting a sample of the exhaled air with a solution of an organometallic compound that reacts with CO_2 to form ^{13}C and ^{12}C labeled carbonyl compounds having unique and well separated infrared spectral peaks for the ^{12}C and ^{13}C products and

determining the relative amounts of the ^{13}C and ^{12}C carbonyl compound by infrared spectroscopy.

4,298,348
TIME-TEMPERATURE INDICATOR COMPOSITION
Dawn M. Ivory, Randolph, N.J., assignor to Allied Corporation, Morris Township, Morris County, N.J.
Filed Mar. 3, 1980, Ser. No. 126,515
Int. Cl.³ G01N *21/06*
U.S. Cl. 23—230 R **6 Claims**

1. A process for activating a recording device including a substrate having deposited thereon 2,4-hexadiyn-1,6-diol-bis(p-chlorobenzenesulfonate) in an inactive form which comprises heating the device above the melting point of the inactive form and cooling the device to form an active form of 2,4-hexadiyn-1,6-diol-bis(p-chlorobenzenesulfonate).

4,298,349
USE OF ALDEHYDES AS EMBRITTLING AGENTS FOR WASTE
Shlomo M. Gabbay, Irvine, Calif., assignor to Occidental Research Corporation, Irvine, Calif.
Filed Aug. 31, 1979, Ser. No. 71,438
Int. Cl.³ C10L *9/02*
U.S. Cl. 44—1 C **25 Claims**

1. A method of converting the solid organic fraction of waste into a powdered fuel which comprises heating said solid organic fraction in the presence of an aldehyde having more than one carbon atom for a time and at a temperature sufficient to embrittle said solid organic fraction, comminuting said embrittled solid organic fraction to a powder and recovering said powder.

2. The method of claim 1 wherein said aldehyde is a C_2 to C_5 aldehyde.

14. A method for separating municipal solid waste (MSW), comprising an inorganic fraction; including glass, ferrous metals and aluminum; and a solid organic fraction, into valuable materials which comprises:

(a) shredding the MSW to provide a comminuted MSW;

(b) separating a ferrous metal fraction from said comminuted MSW and recovering a substantially ferrous metal-free fraction;

(c) separating said substantially ferrous metal-free fraction into an inorganic fraction, which includes glass and aluminum and a solid organic fraction;
(d) comminuting such inorganic fraction to provide an aluminum-rich fraction having a particle size greater than 0.5 inches and a glass rich fraction having a particle size of less than 0.5 inches;
(e) separating such aluminum-rich fraction from said glass-rich fraction;
(f) recovering glass from said glass-rich fraction;
(g) recovering aluminum from said aluminum-rich fraction;
(h) heating said solid organic fraction of step (c) in the presence of an aldehyde having more than one carbon atom for a time and at a temperature sufficient to embrittle such solid organic fraction;
(i) comminuting said embrittled solid organic fraction to a powder; and
(j) recovering said powder.

4,298,350
METHOD OF EMBRITTLING WASTE
Hans F. Bauer, Dana Point, Calif., assignor to Occidental Research Corporation, Irvine, Calif.
Filed Sep. 17, 1979, Ser. No. 76,009
Int. Cl.³ C10L *9/08*
U.S. Cl. 44—1 C **20 Claims**

1. A method of converting the solid organic fraction of waste into a powdered fuel which comprises heating said solid organic fraction in an inert atmosphere, in the absence of any added chemical embrittling agent, selected from the group consisting of mineral acids, organic acids and formaldehyde, for a time and at a temperature sufficient to embrittle said solid organic fraction without causing substantial pyrolysis, substantial decomposition or substantial loss in dry weight of said solid organic fraction, comminuting said embrittled solid organic fraction to a powder and recovering said powder.

3. The method of claim 1 wherein said inert atmosphere comprises less than 5% by weight oxygen.

4. The method of claim 1 wherein the embrittlement takes place at a temperature of at least 125° C.

11. A method for separating municipal solid waste (MSW), comprising an inorganic fraction; including glass, ferrous metals and aluminum; and a solid organic fraction, into valuable materials which comprises:
(a) shredding the MSW to provide a comminuted MSW;
(b) separating a ferrous metal fraction from said comminuted MSW and recovering a substantially ferrous metal-free fraction;
(c) separating said substantially ferrous metal-free fraction into an inorganic fraction, which includes glass and aluminum and a solid organic fraction;
(d) comminuting such inorganic fraction to provide an aluminum-rich fraction having a particle size greater than 0.5 inches and a glass rich fraction having a particle size of less than 0.5 inches;
(e) separating such aluminum-rich fraction from said glass-rich fraction;
(f) recovering glass from said glass-rich fraction;
(g) recovering aluminum from said aluminum-rich fraction;
(h) heating said solid organic fraction of step (c) in an inert atmosphere, in the absence of any added chemical embrittling agent, selected from the group consisting of mineral acids, organic acids and formaldehyde, for a time and at a temperature sufficient to embrittle said solid organic fraction without causing substantial decomposition, substantial pyrolysis, or substantial loss in dry weight of said solid organic fraction;
(i) comminuting said embrittled solid organic fraction to a powder; and
(j) recovering said powder.

4,298,351
METHANOL AUTOMOTIVE FUEL
Roland D. Earle, Key Largo, Fla., assignor to Prime Manufacturing Company, Lynn, Mass.
Filed May 5, 1980, Ser. No. 146,752
Int. Cl.³ C10L *1/18*
U.S. Cl. 44—53 **24 Claims**

1. A fuel for use in an internal combustion engine comprising methanol containing 7-25% of a tertiary alkyl peroxide.

4,298,352
DIESEL FUEL COMPRISING METHANOL AND A METHANOL-SOLUBLE POLYOXYALKYLENE COMPOUND
Ake Blysing, Stenungsund, Sweden, assignor to Berol Kemi AB, Stenungsund, Sweden
Division of Ser. No. 855,576, Nov. 29, 1977, abandoned. This application Aug. 4, 1980, Ser. No. 176,939
Int. Cl.³ C10L *1/18, 1/22, 1/24, 1/26*
U.S. Cl. 44—53 **13 Claims**

1. A process for operating a diesel engine, which comprises running the engine on a methanol-base diesel fuel consisting essentially of at least 50% by weight methanol and, per 100 parts by weight of methanol, from about 2 to about 40 parts by weight of a methanol-soluble polyoxyalkylene compound containing from about 4 to about 400 units derived from an alkylene oxide selected from the group consisting of ethylene oxide and propylene oxide, the oxyalkylene units being at least 40% by weight of the total polyoxyalkylene compound.

4,298,353
ANTI-STATIC ADDITIVES
James R. Spence, Warrenville, Ill., assignor to Standard Oil Company (Indiana), Chicago, Ill.
Division of Ser. No. 900,102, Apr. 26, 1978, Pat. No. 4,252,542, which is a continuation-in-part of Ser. No. 810,378, Jun. 27, 1977, abandoned. This application Feb. 25, 1980, Ser. No. 124,096
Int. Cl.³ C10L *1/18, 1/22*
U.S. Cl. 44—71 **11 Claims**

1. A composition comprising about 1 to 100 parts by weight of an aminomethylene sulfonic acid composition comprising the reaction product of:
A. an amine selected from the group consisting of an adduct of a polyamine and a hydrocarbyl succinic anhydride and a compound of the formula $R_1—NH—CH_2CH_2CH_2NH_2$ or a compound of the formula $R—NH_2$ wherein R and R_1 have 1 to 25 carbon atoms:
B. about 0.5 to 1.5 equivalents of a carbonyl compound having the formula:

$$R_2—\overset{\overset{\displaystyle O}{\|}}{C}—R_3$$

wherein R_2 comprises a hydrogen or methyl group and R_3 comprises a hydrogen or an alkyl group having 1 to 7 carbon atoms, per equivalent of component A and
C. about 0.1 to 2.0 equivalents sulfur dioxide per mole of component A; and about 1 part of the adduct of a maleic anhydride/1-olefin copolymer and an amine-compound of the formula

$$X_1—\underset{\displaystyle X_3}{N}—X_2$$

wherein X_1, X_2 and X_3 are independently a hydrogen or an alkyl group having 1 to 20 carbon atoms.

4,298,354
PREPARATION OF ALCOHOLS FROM SYNTHESIS GAS
Harley F. Hardman, Lyndhurst, and Ronald I. Beach, Chagrin Falls, both of Ohio, assignors to Standard Oil Company, Cleveland, Ohio
Division of Ser. No. 54,216, Jul. 2, 1979, which is a continuation of Ser. No. 905,703, May 15, 1978, abandoned. This application Jun. 27, 1980, Ser. No. 163,666
Int. Cl.³ C10L *1/02*
U.S. Cl. 44—56 **10 Claims**

1. An alcohol mixture suitable for mixing with gasoline comprising at least about 40% methanol, the remaining of said composition comprising higher alcohols, the distribution of said higher alcohols on a methanol-free basis being
C_2—4-25 weight %
C_3—0.1-25 weight %
C_4—0.5-70 weight %
C_5—0.1-12 weight %, and
C_6—0.1-10 weight %.

4,298,355
METHOD FOR THE GASIFICATION OF COAL
Gernot Staudinger, Graz, Austria, assignor to Voest-Alpine AG, Vienna, Austria
Filed Oct. 1, 1979, Ser. No. 81,083
Claims priority, application Austria, Dec. 29, 1978, 9346/78; Fed. Rep. of Germany, May 23, 1979, 2920922
Int. Cl.³ C10J *3/16*
U.S. Cl. 48—206 **11 Claims**

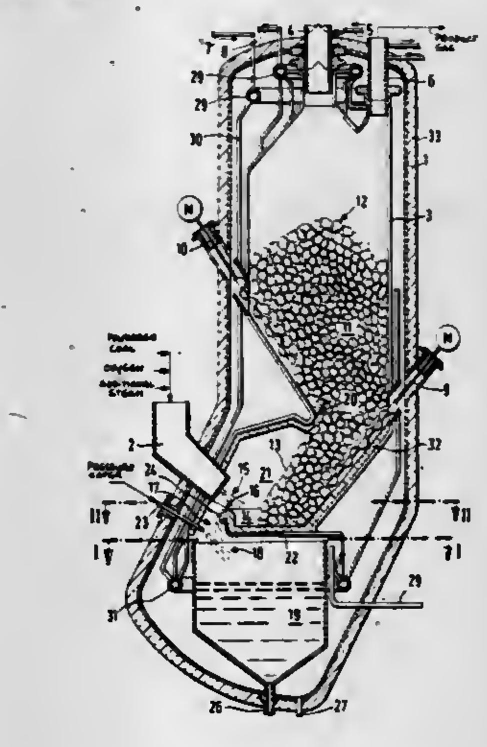

1. In a method for the gasification of coal with oxygen or oxygen-containing gas and water vapor and also if required CO_2, said method being of the type in which powdered coal is gasified in at least one burner, e.g. a cyclone burner, with oxygen or oxygen-containing gas and steam and also if required added CO_2 and the primary gas thereby produced is passed under pressure upwardly, preferably in a countercurrent direction, through coarser coal contained in a shaft gasifier, e.g. a bed of lumps of coal forming free surfaces on the top and bottom thereof, thereby producing product gas and forming liquid slag, the improvement comprising:
collecting said liquid slag formed in said shaft gasifier in a slag bath within the interior of said shaft gasifier;
allowing the thus collected liquid slag to flow off over a weir into a cooling water bath provided in said shaft gasifier;
directing at least one water jet against said liquid slag at a position located below at least one jet of said primary gas as the slag is falling freely within said shaft gasifier between said weir and said cooling water bath, thus atomizing said liquid slag, thereby cooling said slag and generating steam; and
directing said at least one jet of said primary gas toward said coarser coal, to said free bottom surface of said bed thereof, and supplying at least part of said steam generated during the atomization of said slag as process steam to said coarser coal, to said free bottom surface of said bed thereof, by said steam being directly mixed with and carried by said primary gas jet toward said coarser coal.

4,298,356
PROCESS FOR THE MANUFACTURE OF ABRASIVES
Eckart Teschner, Hünstetten; Richard Sattelmeyer, Schlangenbad, and Wolfgang Hesse, Wiesbaden, all of Fed. Rep. of Germany, assignors to Hoechst Aktiengesellschaft, Frankfurt am Main, Fed. Rep. of Germany
Filed Dec. 6, 1979, Ser. No. 100,910
Claims priority, application Fed. Rep. of Germany, Dec. 13, 1978, 2853761
Int. Cl.³ B24D *11/00*
U.S. Cl. 51—297 **10 Claims**

1. In a process for the preparation of an abrasive material having two binder layers comprising the following steps
(i) applying a first binder layer of a flexible sheet-like support;
(ii) scattering abrasive particles onto the said first binder layer;
(iii) drying the product of step (ii) in a horizontal drying unit and subsequently cooling the product in an air stream, the drying process being effected for a time sufficient to allow the said first binder layer to attain sufficient adhesive strength to prevent displacement of the abrasive particles disposed therein when the product is cooled;
(iv) applying a second binder layer as sizer to the cooled product of step (iii);
(v) drying the second binder layer in a horizontal drying unit and subsequently cooling the product, heating and cooling being effected in similar manner to that of step (iii), the drying process being effected for a time sufficient to allow the said second binder layer to become imprint resistant;
(vi) loosely rolling up the product of step (v) and
(vii) curing the product of step (vi);
wherein at least one of the said first and second binder layers comprises at least one aqueous resol I which resol has been prepared from a monohydric phenol and formaldehyde in a molar ratio of phenol:formaldehyde of between 1:1.1 and 1:2.5, the improvement comprising that at least one of said binder layers consists of said resol I and at least one resol condensation product II prepared from 100 to 10 mole% of a polyhydric phenol and 0 bis 90 mole% of a monohydric phenol and formaldehyde wherein the molar ratio of the starting amount of formaldehyde to the total amount of the phenols is (0.6 to 1.5):1, in the absence of polyvinyl alcohol, conveying the coated carrier material at speed of above 5 m/min through the said drying units having well defined independently controllable heating and cooling zones wherein the coated carrier material is contacted with an air stream emitted from slit nozzles arranged transversely to the direction of travel of the coated material, the air stream having a velocity between 5 and 200 m/sec at the nozzles outlets and an outlet temperature between 20° and 300° C. dependent on the temperature zone and drawing of air off with adjacent suction nozzles.

4,298,357
DEGASSING SYSTEM
Stanley J. Pernic, Round Lake, Ill., assignor to Baxter Travenol Laboratories, Inc., Deerfield, Ill.
Continuation of Ser. No. 923,324, Jul. 10, 1978, abandoned. This application Jun. 30, 1980, Ser. No. 164,142
Int. Cl.³ B01D *31/00*
U.S. Cl. 55—165 **13 Claims**

1. A degassing system for use in an artificial kidney system

for removing dissolved and entrained gases from a liquid prior to delivery of said liquid to a dialyzer, said degassing system including:
chamber means for receiving the liquid to be degassed and constructed to degas said liquid at negative pressures as low as about −650 mm/Hg, said chamber means including a liquid inlet for receiving liquid to be degassed; a gas outlet through which gas is withdrawn; and a liquid outlet from which degassed liquid is drawn for delivery to a dialyzer;
valve means associated with said liquid inlet means for controlling liquid flow into said chamber means and the liquid level within said chamber means so as to define a restricted volume for gas within said chamber means; and
pump means associated with said liquid outlet for drawing said liquid from said liquid outlet;
wherein the improvement comprises:

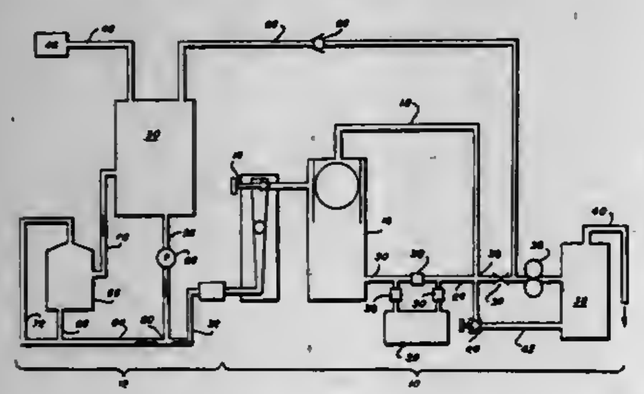

(a) said chamber means further including means defining an inlet for receiving recirculating liquid; and
(b) there being further provided a recirculation loop associated with said chamber means whereby at least a portion of the liquid drawn from the chamber through said liquid outlet is recirculated to the chamber through said recirculation inlet means, said loop including variable-restriction assembly means through which said recirculating liquid flows, said assembly means including:
(i) variable restriction means positioned downstream of said pump means for cooperation in enhancing degassing by separating gas from liquid flowing through said assembly; and
(ii) sensing means for sensing the pressure of the liquid flowing to said assembly and for varying said restriction means in relation to said pressure sensed by said sensing means.

4,298,358
GAS SEPARATING AND VENTING FILTER
Ricky R. Ruschke, McHenry, Ill., assignor to Baxter Travenol Laboratories, Inc., Deerfield, Ill.
Division of Ser. No. 2,689, Jan. 11, 1979, Pat. No. 4,238,207, which is a division of Ser. No. 856,147, Nov. 30, 1977, Pat. No. 4,190,426. This application Jul. 12, 1979, Ser. No. 57,082
Int. Cl.^{3} B01D *46/00*
U.S. Cl. 55—185 **2 Claims**

1. In a gas separating and venting fluid filter comprising: a housing including inlet opening means and outlet opening means, liquid-wetting filter means disposed in a flow path between said inlet and outlet opening means to permit the passage of liquid only, vent opening means in said housing on the upstream side of said liquid-wetting filter means to vent gas from the housing, and liquid-repellent filter means in the path of venting gas to permit the passage of gas only and to prevent the escape of liquid from said housing, the improvement comprising: automatic vent control means carried by said housing, said vent control means being sensitive to the differential pressure between the interior of said housing and the ambient atmosphere and operable under a positive differential to permit venting of separated gas from the vent opening means to the ambient atmosphere, and being further operable to prevent the admission of gas from the ambient atmosphere into the vent opening means, and said liquid-repellent filter means being generally planar and being mounted on said housing by a

continuous medical grade adhesive tape which overlaps the peripheral edge of said filter means and the portion of said housing adjacent said peripheral edge.

4,298,359
CENTRIFUGAL SEPARATOR HAVING HEAT TRANSFER MEANS
Egon Keller, Aarbergen, and Peter Kreutz, Neuss, both of Fed. Rep. of Germany, assignors to Passavant-Werke Michelbacher Huette, Aarbergen, Fed. Rep. of Germany
Filed Jun. 23, 1980, Ser. No. 161,753
Claims priority, application Fed. Rep. of Germany, Jun. 23, 1979, 7918099[U]
Int. Cl.^{3} B04C *3/02;* **B01D** *45/12*
U.S. Cl. 55—269 **2 Claims**

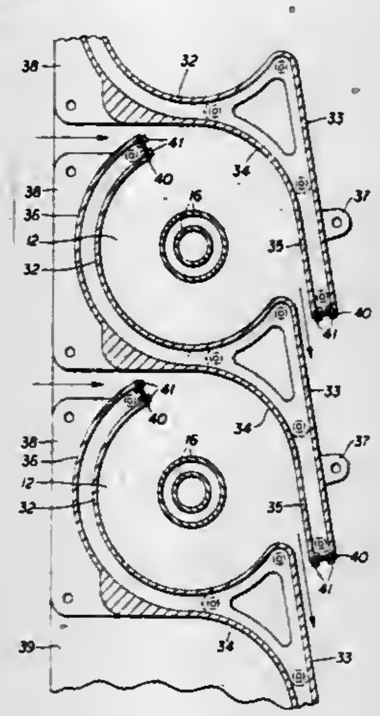

1. Apparatus for separating liquid and/or solid particles suspended in a gaseous and/or vaporous media stream by means of centrifugal force having a curved channel defined by a wall and through which the media stream flows and having a turbulence chamber defined by a wall and connected to the concave side of the curved channel and accommodating a partial stream of the media stream, and having at least one discharge opening for the particles separated from the partial stream and at least one exhaust opening for the particle-free fraction of the partial stream, with at least one of the walls of the curved channel and the turbulence chamber being provided with a cavity for the passage of a heat or cooling transfer medium and said apparatus embodies a plurality of separator devices arranged in staggered relationship to each other with each comprising a curved channel and a turbulence chamber, the improvement in that at least one section of the wall of a turbulence chamber and one section of the interior wall of said channel, simultaneously constitutes at least one section of the exterior wall of the channel of an adjacent separator device, and defines common wall sections of double-walled construction.

4,298,360
PULSED AIR FILTER CLEANING SYSTEM
Leif W. Poll, 7 Dalewood Rd., W. Caldwell, N.J. 07006
Filed Feb. 2, 1981, Ser. No. 230,650
Int. Cl.^{3} B01D *46/04*
U.S. Cl. 55—273 **10 Claims**

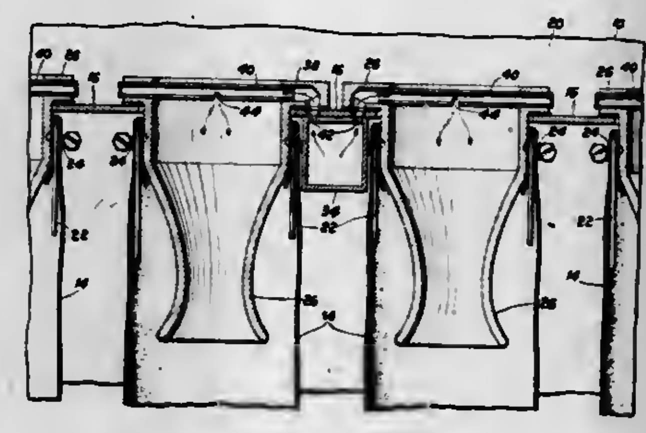

1. An air cleaning system comprising:
a housing including an inlet for receiving dust-laden air and an exhaust chamber having an outlet for exhausting clean air;
a filter chamber including a plurality of filter bags positioned between said inlet and outlet for cleaning said air;
a platform extending across said housing and separating said filter chamber and inlet from said exhaust chamber and outlet, said platform including a plurality of openings holding and sealing said filter bags, said bags having open ends communicating with said exhaust chamber through said platform openings; and
means for cleaning said filter bags including a tubular channel secured below said platform adjacent said filter bags,
a plurality of conduits extending over the open ends of said filter bags, each said conduit having an orifice facing respective said open ends of said filter bags, a plurality of passages connected through said tubular channel and platform to respective said conduits,
a source of compressed air connected to said tubular channel,
control means for periodically applying pulses of said compressed air through said tubular channel and passages and through said conduits and orifices to direct said air pulses in a reverse direction into said filter bag open ends to remove dust from the outer surfaces of said bags, and
means for collecting said dust removed from said bags.

4,298,361
ROTARY DRUM FILTER STRIPPER NOZZLE MOUNTING
Hovan Hocutt, and David M. Ford, both of Charlotte, N.C., assignors to Pneumafil Corporation, Charlotte, N.C.
Filed May 19, 1980, Ser. No. 151,344
Int. Cl.^{3} B01D *46/04*
U.S. Cl. 55—290 **8 Claims**

1. In a rotary drum filter in which a rotating cylindrical drum is provided with a filter surface through which air passes from the exterior to the interior of the drum, and at least one nozzle is positioned to move over the filter surface to strip foreign matter accumulating thereon, a mounting for the at least one nozzle, said mounting comprising an elongate relatively rigid walled duct extending along an axis spaced from and parallel to the drum axis; a stationary portion of said duct mounted at one end of the drum; and a traversing portion of said duct mounted along the drum and telescoping with respect to said stationary portion, said traversing portion supporting the at least one nozzle, and drive means coupled to said traversing portion to effect movement thereof.

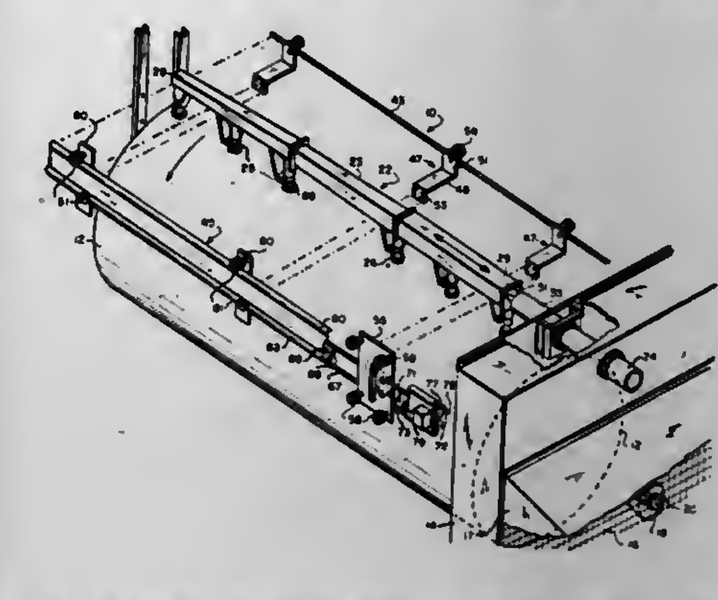

4,298,362
FILTER CLEANING DEVICE
Walther Krull; Alfred Bekaan, and Wolf-Dieter Schiller, all of Lübeck, Fed. Rep. of Germany, assignors to Beth GmbH, Lübeck, Fed. Rep. of Germany
Filed Apr. 17, 1980, Ser. No. 141,146
Claims priority, application Fed. Rep. of Germany, Apr. 17, 1979, 2915958
Int. Cl.^{3} B01D *46/04*
U.S. Cl. 55—304 **9 Claims**

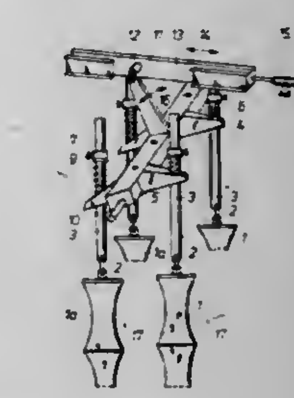

1. A filter installation comprising:
at least two rows of spaced-apart filter tubes;
a rocker pivotal about a horizontal axis between said rows and having respective arms disposed above each of said filter tubes and assigned thereto;
respective resilient oscillatory links connecting each of said arms with a respective filter tube whereby each resilient link forms a vibratile suspension with the respective filter tube, each of said links includes:
a respective support member swingably connecting each of said filter tubes with a respective one of said arms and allowing relative longitudinal movement of the respective arm and tube, and
a respective spring surrounding each of said support members; and
means for angularly displacing said rocker about said axis to expand and contract said filter tubes to dislodge collected material therefrom.

4,298,363
FRACTIONATOR FEED TANK PRESSURE CONTROL
Grover L. Campbell, Old Ocean, and James W. Hobbs, Sweeny, both of Tex., assignors to Phillips Petroleum Co., Bartlesville, Okla.
Division of Ser. No. 69,154, Aug. 23, 1979, Pat. No. 4,239,517. This application May 16, 1980, Ser. No. 150,492
Int. Cl.³ B01D *3/42*
U.S. Cl. 62—21 **8 Claims**

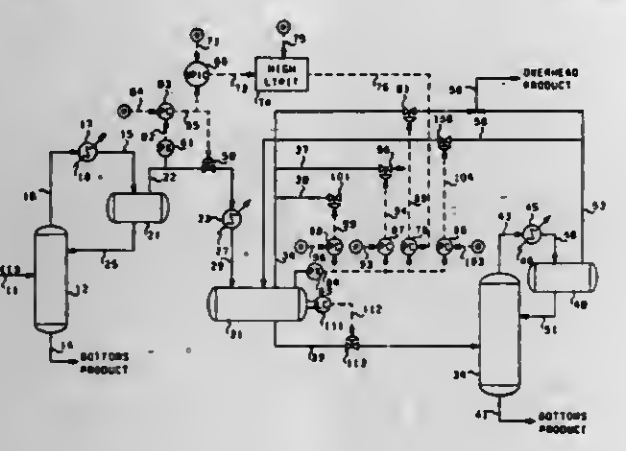

1. A method for controlling a multi-stage fractional distillation process in which the overhead product from a first fractional distillation column is supplied from a first overhead assumulator associated with said first fractional distillation column through a first control valve to a feed tank for a second fractional distillation column comprising the steps of:
establishing a first signal representative of the pressure in said first accumulator;
establishing a second signal representative of the desired pressure in said first accumulator;
using a computing means to establish responsive to said first signal and said second signal, a third siganl responsive to the difference between said first signal and said second signal;
manipulating said first control valve in response to said third signal to thereby maintain a desired pressure in said first accumulator;
establishing a fourth signal representative of a desired valve position for said first control valve;
using a computing means to establish responsive to said third signal and said fourth signal, a fifth signal responsive to the difference between said third signal and said fourth signal;
establishing a sixth signal representative of the pressure in said feed tank;
using a computing means to establish responsive to said fifth signal and said sixth signal, a seventh signal responsive to the difference between said fifth signal and said sixth signal; and
manipulating the pressure in said feed tank in response to said seventh signal, the pressure in said first overhead accumulator and the pressure in said feed tank being manipulated so as to maintain a desired valve position for said first control valve.

4,298,364
METHOD OF MAKING OPTICAL FIBERS HAVING IMPROVED CORE ROUNDNESS
Paul E. Blaszyk, Big Flats, and Susan F. Murphy, Corning, both of N.Y., assignors to Corning Glass Works, Corning, N.Y.
Filed Mar. 17, 1980, Ser. No. 131,169
Int. Cl.³ C03B *23/07, 37/025, 37/07, 37/075*
U.S. Cl. 65—3.11 **6 Claims**

1. In the method of manufacturing an optical waveguide preform which includes the steps of
providing a cylindrical glass bait tube, and
forming at least one layer of glass on the inner surface thereof, the improvement which comprises subjecting said bait tube to the following steps prior to the time said layer is formed:
heating said bait tube,
providing a positive pressure within said bait tube, decreasing the diameter of said bait tube by at least one mm to form a shrunken tube, and

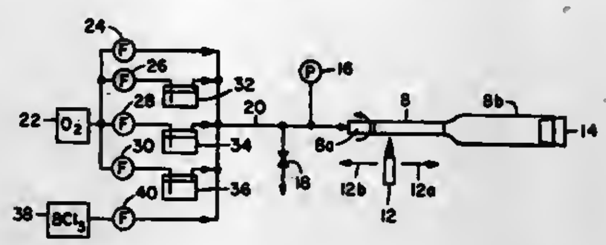

increasing the pressure within said shrunken bait tube so that the tube diameter increases to at least one mm greater than the diameter of said bait tube in its shrunken state to form an expanded bait tube, thereby improving the roundness of said bait tube without detrimentally affecting the uniformity of the tube wall thickness.

4,298,365
METHOD OF MAKING A SOOT PREFORM COMPOSITIONAL PROFILE
Alan C. Bailey, Painted Post, and Alan J. Morrow, Elmira, both of N.Y., assignors to Corning Glass Works, Corning, N.Y.
Filed Jul. 3, 1980, Ser. No. 165,652
Int. Cl.³ C03B *19/06, 37/025, 37/075*
U.S. Cl. 65—3.12 **13 Claims**

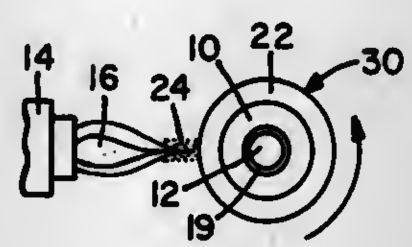

1. A method of forming a high purity glass article comprising the steps of
providing a substantially cylindrical mandrel,
applying to said mandrel a stratum of low viscosity glass soot,
applying a first coating of glass soot to the outside peripheral surface of said stratum,
applying a second coating of glass soot over the outside peripheral surface of said first coating, the glass soot of said second coating having a refractive index less than that of the glass soot of the first coating, the viscosity of said second coating being greater than that of said first coating and the viscosity of said first coating being greater than that of said stratum at the consolidation temperature of said second coating,
removing said mandrel to form a soot preform having an aperture therein, the thickness of said stratum being sufficiently great that a continuous layer of said low viscosity material remains on the inner surface of said first coating after the step of removing said mandrel has been completed, and
forming the structure so formed into a desired glass article.

4,298,366
GRADED START RODS FOR THE PRODUCTION OF OPTICAL WAVEGUIDES
Franklin W. Dabby, Woodbridge, and Ronald B. Chesler, Cheshire, both of Conn., assignors to Times Fiber Communications, Inc., Wallingford, Conn.
Filed Jul. 13, 1979, Ser. No. 57,519
Int. Cl.³ C03C *37/075;* **G02B** *5/172*
U.S. Cl. 65—3.12 **8 Claims**

1. A process for the production of optical waveguides which comprises preparing a preform by depositing and sintering borosilicate particles on a cylindrical glass rod, heating said preform to the drawing temperature and drawing said preform into optical waveguides, wherein said cylindrical glass rod comprises a central area of constant refractive index and an outer region of varying refractive index and wherein said cylindrical glass rod is prepared by the process comprising depositing and sintering borosilicate particles on a pure fused silica glass rod and drawing the resulting composite to obtain a graded start rod of about the same diameter as the original pure fused silica rod.

4,298,367
METHOD OF AND DEVICE FOR CLEANSING IN A FIBRE BLANKET MANUFACTURING PLANT
Jean Descolas, Le Pecq, France, assignor to Aktiebolaget Svenska Flaktfabriken, Sweden
Filed Jul. 1, 1980, Ser. No. 165,031
Claims priority, application France, Jul. 2, 1979, 79 17133
Int. Cl.³ C03B *37/07*
U.S. Cl. 65—4.1 **11 Claims**

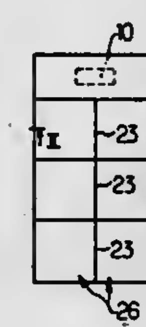

1. A method of cleansing, in a plant for manufacturing a blanket from fibres such as glass fibres or rock fibres which are thrown or set together with polymerizable binder particles or droplets onto a perforated conveying belt, consisting in associating means for sucking air loaded with fibre dust and binder particles or droplets with means for spraying a washing liquid such as water and then processing this washing liquid, wherein the improvement consists in positioning below said conveying belt series of Venturi nozzles having throats with adjustable cross-sectional passageway surface areas, opening into a duct connected to suction means, and distributor manifolds for spraying washing liquid at low pressure such as water arranged on the one hand at the inlets of said Venturi nozzles and on the other hand downstream of the outlets of said Venturi nozzles to provide a streaming of liquid onto all the walls of the dust removing ducts or means on which dusts and binder are likely to settle down.

4,298,368
DELIVERING AND ALIGNING GLASS SHEETS IN A BENDING STATION
Samuel L. Seymour, Oakmont, Pa., assignor to PPG Industries, Inc., Pittsburgh, Pa.
Continuation-in-part of Ser. No. 44,425, Jun. 1, 1979, Pat. No. 4,233,049, which is a continuation-in-part of Ser. No. 960,404, Nov. 13, 1978, abandoned. This application Apr. 28, 1980, Ser. No. 144,481
The portion of the term of this patent subsequent to May 27, 1997, has been disclaimed.
Int. Cl.³ C03B *23/035*
U.S. Cl. 65—25.2 **7 Claims**

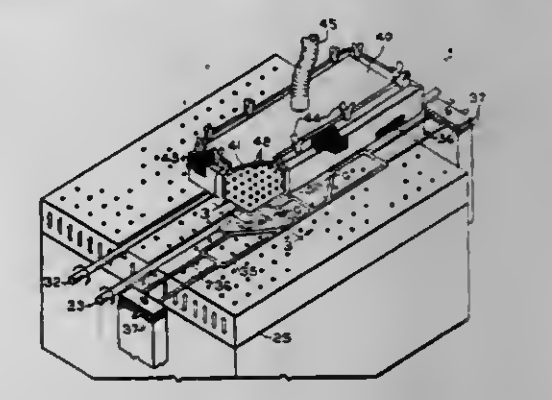

1. A method of delivering and aligning glass sheets within a bending station, comprising the steps of:
engaging the entire width of a glass sheet heated to approximately its softening point with an upstream conveyor roll rotating about an axis extending normal to a path of travel along a gas support bed;
engaging the entire width of said glass sheet with a downstream rotating conveyor roll spaced longitudinally of said upstream conveyor roll for at least a portion of the time said upstream conveyor roll engages said glass sheet,
applying hot gas to the bottom surface of said glass sheet while engaging said glass sheet with at least one of said rotating rolls,
thereby delivering said glass sheet with its leading edge in more approximate alignment and orientation with alignment means than if said glass sheet were delivered within said bending station on less than two rotating rolls.

4. Apparatus for orienting and aligning a glass sheet while delivering said glass sheet to a bending station along a path of travel on a gas support bed comprising
means for supporting said glass sheet on a layer of hot gas along said path of travel,
an upstream conveyor roll and a downstream conveyor roll extending completely across said path of travel and mounted for rotation about axes extending normal to said path of travel at an elevation to contact the lower surface of said glass sheet and longitudinally spaced from one another along said path of travel a distance less than the length of said glass sheet for rotatably engaging said glass sheet along said path of travel simultaneously for at least a portion of the length of said glass sheet,
means for rotating said rolls in unison while both rolls drivingly engage said glass sheet completely across its width along lines spaced longitudinally of said path of travel, and
aligning means for engaging the leading edge of said glass sheet located downstream of said downstream conveyor roll and spaced longitudinally from said downstream conveyor roll a longitudinal distance approximately the length of said glass sheet,
whereby the simultaneous rotating engagement of said conveyor rolls on said gas supported glass sheet en route to said aligning means minimizes the amount that the glass sheet is misoriented and/or misaligned en route to nest with said aligning means and said upstream and downstream rolls are longitudinally spaced from one another a distance sufficient to provide minimum interference with

the supply of gas from said gas support bed against the surface of said glass sheet engaged by said rolls.

4,298,369

GLASS MANUFACTURING PROCESS HAVING BORON AND FLUORINE POLLUTION ABATING FEATURES

Magnus L. Froberg, Granville, and Charles F. Schroeder, Toledo, both of Ohio, assignors to Owens-Corning Fiberglas Corporation, Toledo, Ohio

Filed Mar. 31, 1980, Ser. No. 135,061

Int. Cl.[3] **C03B** *5/16*

U.S. Cl. 65—27 **7 Claims**

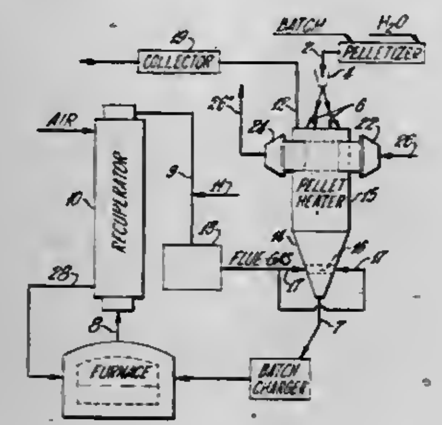

1. In a glass manufacturing process comprising combining glass batch ingredients, including a source of fluorine and boron, with water into agglomerates, conveying hot, boron and fluorine containing, effluent gases from above a pool of molten glass to a bed of agglomerates and passing said gases directly thereto so as to preheat said agglomerates to a temperature in excess of at least about 500° C., feeding said preheated agglomerates to a glass melting furnace and melting said agglomerates therein, the improvement comprising introducing a fluorine and boron reactive alkaline earth metal oxide, or a precursor of said oxide, into said hot gases prior to passing said gases through said bed of agglomerates, reacting fluorine and boron in said gases and said reactive material at a temperature in excess of about 500° C. and recovering a reaction product thereof in said bed upon passage of said gases therethrough.

4,298,370

METHOD OF IMPROVING GLASS MELTING BY ABLATION ENHANCEMENT

Joseph J. Hammel, O'Hara Township, Allegheny County, Pa., assignor to PPG Industries, Inc., Pittsburgh, Pa.

Filed Jun. 2, 1980, Ser. No. 155,802

Int. Cl.[3] **C03B** *1/00, 3/00, 5/235*

U.S. Cl. 65—27 **17 Claims**

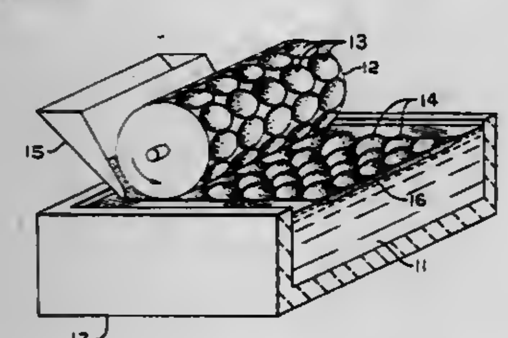

1. In a method of melting glass wherein particulate glass batch materials are fed onto a pool of molten glass within a heated enclosure where the batch floats as a layer on the pool of molten glass until rendered liquid by the heat within the enclosure, the improvement comprising: creating at spaced intervals across the batch layer a plurality of tapered holes having sloped surfaces of compacted batch and extending substantially through the thickness of the batch layer without substantially increasing the thickness of the batch layer.

4,298,371

PROCESS AND APPARATUS FOR MAKING HOLLOW GLASSWARE

Werner D. Knoth, Byfangerstr. 175, 4300 Essen 15, and Helmut Münker, Rüstermark 27, 4300 Essen 1, both of Fed. Rep. of Germany

Filed Nov. 23, 1979, Ser. No. 96,744

Int. Cl.[3] **C03B** *9/00, 9/18*

U.S. Cl. 65—79 **3 Claims**

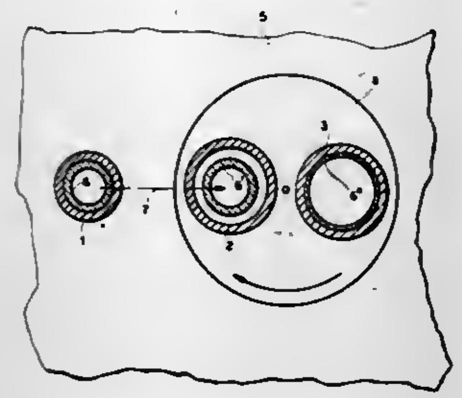

1. A process for mass-producing hollow glass articles, comprising the steps of:

(a) forming a hot first parison from a gob of molten glass in a premold;

(b) transferring said first parison in its heated state to a first final mold;

(c) forming a hot second parison from a gob of molten glass in said premold while letting said first parison cool in said first final mold;

(d) transferring said second parison in its heated state to a second final mold;

(e) forming a hot third parison from a gob of molten glass in said premold while letting said second parison cool in said second final mold and blowing said first parison in said first final mold into a shaped article; and

(f) after removal of said shaped article from said first final mold, repeating the preceding steps.

4,298,372

COMBUSTION AIR FLOW CONTROL FOR REGENERATORS

K. Lawrence Stover, Genoa; Alejandro G. Bueno, Toledo; James W. Miller, Rossford, and Donald E. Shamp, Millbury, all of Ohio, assignors to Libbey-Owens-Ford Company, Toledo, Ohio

Filed Feb. 22, 1980, Ser. No. 123,559

Int. Cl.[3] **C03B** *5/44*

U.S. Cl. 65—136 **8 Claims**

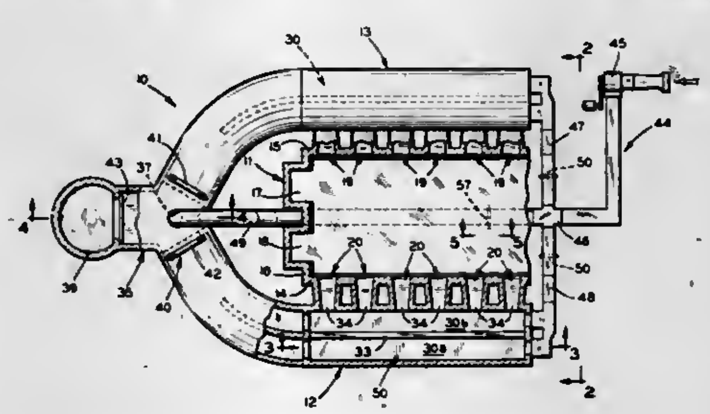

1. In a method of supplying combustion air to the elongated regenerators spaced along each side of a regenerative tank-type glass melting furnace for improving their operating efficiency, the tank having a charging end to which batch materials are supplied and a delivery end from which molten glass is

withdrawn, the regenerators being in communication with a plurality of ports spaced along the furnace and of the type including elongated checker brick structures having plenum chambers spaced above and below and extending throughout the length of the checker brick structures and with an upstream end toward the charging end of said tank and a downstream end toward the delivery end thereof, wherein incoming combustion air is admitted to the lower plenum chamber and rises through the checker brick structure to the upper plenum chamber during the firing cycle of the furnace, the improvement comprising the steps of:

a. simultaneously supplying combustion air to both ends of the lower plenum chamber of the regenerator supplying combustion air to the furnace during the firing cycle;

b. admitting a substantial portion of the combustion air into the downstream end of the lower plenum chamber of the regenerator; and

c. admitting a lesser portion of the combustion air into the upstream end of the lower plenum chamber of said regenerator whereby the opposed flow of combustion air tends to minimize localized overheating and equalize the operating temperatures of said regenerator throughout its length.

3. In a reversing regenerative glass melting furnace of the type comprising a tank wherein batch materials are supplied at a charging end and molten glass is withdrawn at a delivery end, and including a melting zone having a plurality of ports spaced along each of two opposite sides thereof, each said plurality of spaced ports being connected to an elongated regenerator extending along the side of said furnace with an upstream end toward the charging end of said tank and a downstream end toward the delivery end thereof, said regenerator being alternately placed in communication with a source of combustion air during its firing cycle and an exhaust flue during its exhaust cycle, the improvement comprising:

a. combustion air inlet means at each said end of said regenerator;

b. means for supplying a substantial portion of the combustion air through said inlet means to the downstream end of the regenerator during its firing cycle; and

c. means for supplying a lesser portion of the combustion air through said inlet means to the upstream end of said regenerator during the firing cycle whereby the opposed flow of combustion air tends to minimize localized overheating and equalize temperatures throughout the length of said regenerator.

4,298,373

APPARATUS FOR CUSHIONING THE MOTION OF RECIPROCATING MEMBERS

Eustace H. Mumford, Ottawa Lake, Mich., and Jack I. Perry, Sylvania, Ohio, assignors to Owens-Illinois, Inc., Toledo, Ohio

Filed Jan. 14, 1980, Ser. No. 112,012

Int. Cl.[3] **C03B** *9/04;* **F01B** *9/00*

U.S. Cl. 65—260 **13 Claims**

7. Apparatus for decelerating the motion of a take-out mechanism on a glass container forming machine, comprising:

a reciprocating pneumatic motor having a piston rod extending therefrom;

a first rack gear carried by the extending end of said piston rod;

a pinion in engagement with said rack gear;

means supporting said pinion for rotation about a horizontal axis and means connecting said pinion to a take-out arm;

a second rack in engagement with said pinion at a diametrically opposed portion thereof and confined to vertical movement;

said second rack being moved axially in equal but opposite amounts as said first rack;

a first decelerator mounted above, in axial alignment with said first rack;

a rod extending from above the upper end of said first rack to a position just short of said first decelerator;

axially movable means for supporting and guiding said rod for axial movement, said rod engaging said first rack upon vertical movement of said rack a predetermined amount;

said rod acting against said first decelerator when said first rack approaches the maximum extent of its upward movement;

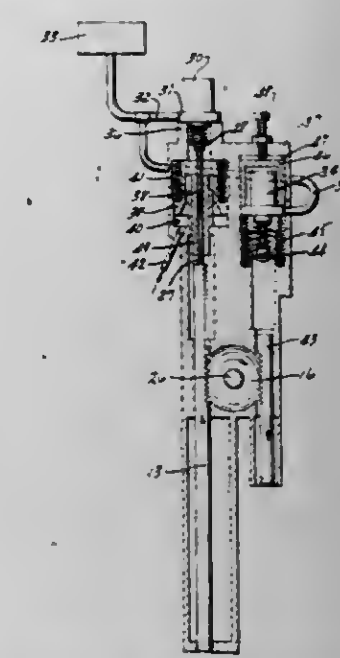

a second decelerator in axial alignment with said second racks; and

means mounting said second decelerator in vertical alignment with the path of movement of said second rack, whereby said second decelerator will cushion the movement of said piston rod in a downward direction by engagement thereof by said second rack.

4,298,374

APPARATUS FOR IMPROVING GLASS MELTING BY PERFORATING BATCH LAYER

Edward P. Savolskis, and Walter W. Scott, both of Carlisle, Pa., assignors to PPG Industries, Inc., Pittsburgh, Pa.

Filed Jun. 16, 1980, Ser. No. 159,528

Int. Cl.[3] **C03B** *1/00, 3/00, 5/235*

U.S. Cl. 65—335 **7 Claims**

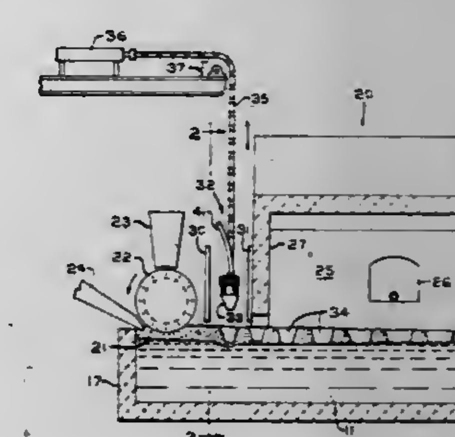

1. In a furnace for melting glass including a heated enclosure containing a pool of molten glass, an inlet opening in the enclosure and means for feeding a layer of glass batch materials onto the surface of the molten glass through the inlet opening, the improvement comprising means for producing a series of holes in the batch layer including: support means extending across and above a substantial portion of the batch layer, a plurality of hole-shaping members extending downwardly from spaced-apart locations along the support means, at least a lower portion of each member provided with a three-dimensional shape

corresponding generally to the shape of a hole to be produced in the batch layer, the shape having a relatively wide upper portion and a relatively narrow lower portion with tapering side surfaces therebetween oriented to produce lateral compaction of batch upon vertical insertion into the batch layer, means for vertically reciprocating the support means and the hole-shaping members carried thereon between a raised elevation above the batch layer and a lowered elevation at which the hole-shaping members penetrate a substantial portion of the thickness of the batch layer, and means for cooling the hole-shaping members.

4,298,375

2-SUBSTITUTED-5-PHENYL-4-THIAZOLECARBOXYLIC ACIDS AND THEIR DERIVATIVES AS SAFENING AGENTS

Robert K. Howe, Bridgeton, and Len F. Lee, Maryland Heights, both of Mo., assignors to Monsanto Company, St. Louis, Mo.

Filed Oct. 1, 1979, Ser. No. 80,749

Int. Cl.³ C07D *277/20*

U.S. Cl. 71—90 **32 Claims**

1. A compound having the formula

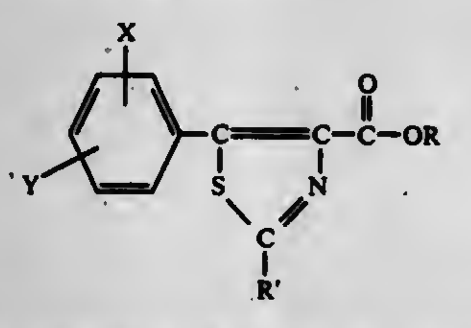

wherein R is hydrogen, lower alkyl, halo(lower)alkyl, lower alkenyl, halo(lower)alkenyl or agriculturally acceptable cations; R' is halo, amino, lower alkoxy or phenylthio. X and Y independently equal hydrogen, lower alkyl, lower alkoxy, trifluoromethyl or halo moieties; provided that when R is hydrogen or lower alkyl, R' may not equal amino.

4,298,376

METHOD FOR TREATING MOLTEN STEEL AND APPARATUS THEREFOR

Kiichi Narita, Kobe; Takasuke Mori, Ashiya; Kenzo Ayata, and Takehisa Makino, both of Kobe, all of Japan, assignors to Kobe Steel, Ltd., Kobe, Japan

Filed Apr. 14, 1980, Ser. No. 139,655

Int. Cl.³ C21C *7/10*

U.S. Cl. 75—49 **10 Claims**

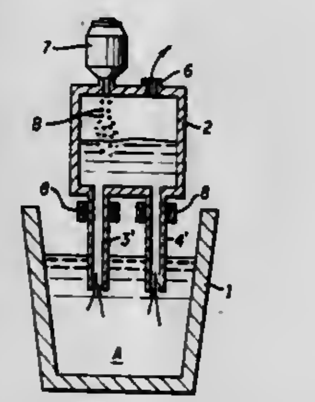

1. A method for treating molten steel utilizing at least one induction coil, a ladle, a treating vessel and at least one passage pipe interconnecting said ladle and said treating vessel, which comprises:

positioning an induction coil around each of said passage pipes;

lifting up a part of said molten steel through each of said passage pipes from said ladel to said treating vessel disposed over said ladle through adjustment of molten steel composition in said treating vessel;

thereafter returning said molten steel to said ladle through each of said passage pipes;

circulating said molten steel between said ladle and said treating vessel while heating said molten steel by reversing direction of flow of said molten steel in each of said passage pipes by operation of each of said induction coils disposed around each of said passage pipes; and

operating each of said induction coils at a frequency of 50 to 60 cycles.

4,298,377

VORTEX REACTOR AND METHOD FOR ADDING SOLIDS TO MOLTEN METAL THEREWITH

Andrew G. Szekely, Yorktown Heights, N.Y., assignor to Union Carbide Corporation, New York, N.Y.

Filed Dec. 3, 1979, Ser. No. 99,583

Int. Cl.³ C22B *9/00*

U.S. Cl. 75—53 **5 Claims**

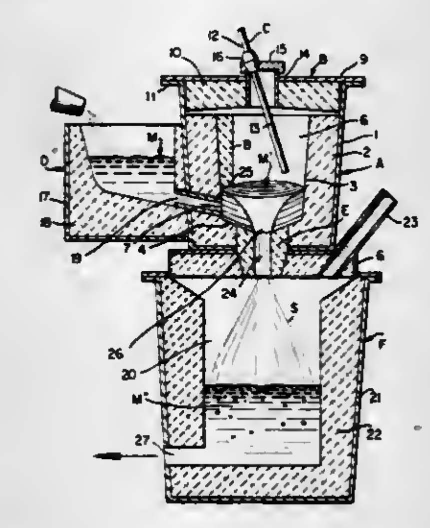

1. A method for adding solid additives to molten metal comprising: feeding a stream of molten metal continuously into a vortex forming zone in such manner that the flow of metal in said zone is caused to rotate and to form a hollow-centered vortex, said method being characterized by:

(1) continuously feeding the solid additive to be admixed with the metal onto the surface of the rotating metal vortex,

(2) discharging the metal-additive mixture from said vortex forming zone in a controlled manner such that the mixture forms a free-falling, hollow-centered fluid stream, said stream remaining hollow-centered for its entire length, and

(3) collecting the discharged mixture in a receiving zone.

4,298,378

ROTARY STEEL CONVERTER, METHOD OF MAKING STEEL THERE-WITH AND METHOD OF APPLYING REFRACTORY LINING TO CONVERTER

Keikichi Murakami, Kobe, Japan, assignor to Kawasaki Jukogyo Kabushiki Kaisha, Hyogo, Japan

Filed Dec. 14, 1979, Ser. No. 103,619

Claims priority, application Japan, Dec. 22, 1978, 53-163691; Dec. 22, 1978, 53-163692

Int. Cl.³ C21C *5/50*

U.S. Cl. 75—60 **12 Claims**

1. A steelmaking converter capable of both rotary and tilting motion, comprising:

(a) a vessel (32), said vessel having a first axis (Y—Y) and two parallel axially spaced tires (39, 40) rigidly encircling the same;

(b) a trunnion ring (35) coaxially encircling the vessel;

(c) means (36, 52, 53) for supporting the trunnion ring (35) for rotary motion about a second axis (X—X) at right angles with the first axis (Y—Y);

(d) a plurality of radial support rollers (37) mounted on the trunnion ring (35) in two spaced annular rows, the radial support rollers (37) in each of the rows being distributed uniformly substantially throughout the circumference of the trunnion ring (35), said two rows of the radial support rollers (37) engaging said two tires (39, 40) in radial directions, respectively, to bear the radial load of the vessel (32) so as to permit rotation thereof about the first axis (Y—Y) relative to the trunnion ring (35);

(e) a plurality of axial support rollers (38) mounted on the trunnion ring (35) in two spaced annular rows, the axial support rollers (38) in each of the rows being distributed uniformly substantially throughout the circumference of the trunnion ring (35), said two rows of the axial support rollers (38) axially engaging said two tires (39, 40) respectively, to bear the axial load of the vessel while the rotation thereof about the first axis (Y—Y) relative to the trunnion ring (35);

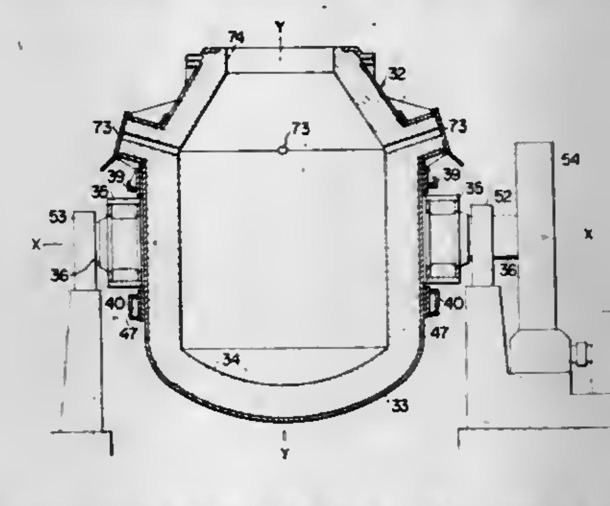

(f) guide means (58) on the trunnion ring (35) for permitting said radial and axial support rollers (37, 38) to move toward and away from the associated tires (39, 40);

(g) biasing means (59) disposed within said guide means (58) to resiliently bias each of the radial and axial support rollers (37, 38) against the associated tires (39, 40); and

(h) drive means (43, 46, 42, 48) for rotating the vessel (32) about the first axis (Y—Y) relative to the trunnion ring (35), said drive means including a drive source (43) disposed within the trunnion ring (35), and a drive mechanism (41, 41a) operated by the drive source and associated with said vessel (32) to transmit the driving force to the same.

4,298,379

PRODUCTION OF HIGH PURITY AND HIGH SURFACE AREA MAGNESIUM OXIDE

Adolfo R. Zambrano, Hibbing, Minn., assignor to The Hanna Mining Company, Cleveland, Ohio

Filed Jan. 31, 1980, Ser. No. 117,224

Int. Cl.³ C01F *5/12;* C25C *3/04;* C22B *23/00;* C22C *33/00*

U.S. Cl. 75—82 **22 Claims**

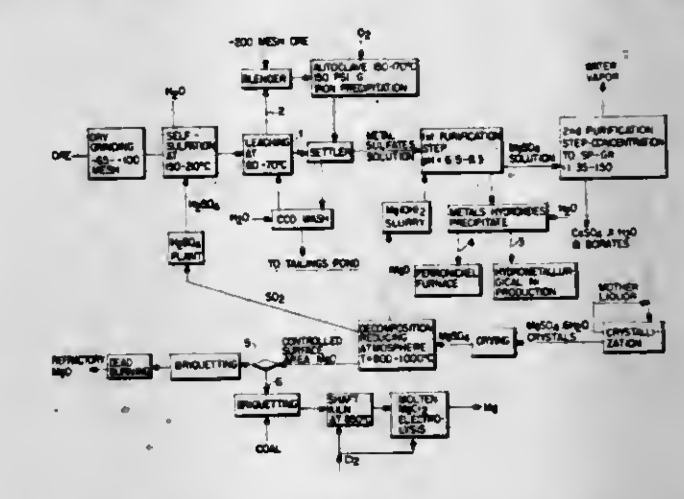

1. A process for the preparation of high surface area, high purity MgO from a solution of: sulfates of Mg, Ca, and other metals selected from the group consisting of Fe, Ni, Co, and Al; and impurities including B and Si, comprising the steps of:

(a) precipitating from the solution said other metals as hydroxides;

(b) separating the solution from the precipitate;

(c) concentrating the separated solution to a specific gravity of from about 1.35 to 1.5, whereby Ca, B, Si and residual impurities are precipitated;

(d) separating the concentrated solution from the precipitate;

(e) recovering dehydrated $MgSO_4$ crystals from the concentrated solution; and

(f) decomposing the dehydrated $MgSO_4$ crystals to form high purity MgO suitable for producing refractory materials.

4,298,380

PROCESS FOR PURIFYING LOW-MELTING METALS FROM IMPURITIES

Ellin P. Bochkarev, ulitsa Ostrovityanova, 15, korpus 1, kv. 138, Moscow; Igor V. Prokopov, ulitsa Kalinina, 150, kv. 15, Pavlodar; Alexandr V. Eljutin, 3 Frunzenskaya ulitsa, 7, kv. 176, Moscow; Arkady A. Belsky, Komsomolsky prospekt, 48/22, kv. 20, Moscow; Svetlana M. Baryshnikova, ulitsa Udaltsova, 4, kv. 301, Moscow; Nail Z. Nasyrov, ulitsa Kuibysheva, 59, kv. 18, Pavlodar; Nikolai A. Novikov, 3 Institutskaya ulitsa, 15, kv. 49, Moscow; Edige R. Khairulin, ulitsa Kataeva, 54, kv. 6, Pavlodar; Mikhail S. Zvyagin, ulitsa Lenina, 4, kv. 219, Moskovskaya oblast, Reutovo; Vladimir N. Abrjutin, ulitsa Verkhnyaya Maslovka, 7, kv. 68, Moscow; Ljubov I. Konstantinova, ulitsa Glavmosstroya, 1, kv. 110, Moskovskaya oblast, Solntsevo; Nina A. Ljubimova, 11 Parkovaya ulitsa, 44, korpus 4, kv. 36, Moscow, and Nadezhda S. Gorbacheva, Tishinskaya ploschad, 6, kv. 51, Moscow, all of U.S.S.R.

Filed Feb. 14, 1980, Ser. No. 121,519

Int. Cl.³ C22B *43/00, 58/00*

U.S. Cl. 75—101 BE **10 Claims**

1. A process for purifying low-melting metals selected from the group consisting of gallium and mercury from metallic impurities comprises treating a melt of said metal with an aqueous solution of a compound selected from the group consisting of an inorganic acid and alkali in the presence of organic compounds with ionic groups.

4,298,381

ABRASION-RESISTIVE HIGH PERMEABILITY MAGNETIC ALLOY

Mitsuhiro Kudo, Hamuramachi; Shigekazu Otomo, Hachioji; Hirotomo Ogihara, Sendai, and Yoshio Aoki, Hachioji, all of Japan, assignors to Hitachi Denshi Kabushiki Kaisha, Tokyo, Japan

Filed Dec. 18, 1979, Ser. No. 104,716

Claims priority, application Japan, Dec. 22, 1978, 53-157602

Int. Cl.³ C22C *38/06*

U.S. Cl. 75—124 **4 Claims**

1. Abrasion-resistive, high permeability magnetic alloy consisting of 6-9 wt.% of Si, 7-11 wt.% of Al, 2-5 wt.% of Cr, 0.5-2 wt.% of Ti, 0.02-0.3 wt.% of at least one member selected from the group consisting of P and C and the balance of Fe.

4,298,382
METHOD FOR PRODUCING LARGE METALLIC GLASS BODIES
John L. Stempin, Beaver Dams, and Dale R. Wexell, Corning, both of N.Y., assignors to Corning Glass Works, Corning, N.Y.
Filed Jul. 6, 1979, Ser. No. 55,176
Int. Cl.³ B22F *1/00, 3/14*
U.S. Cl. 75—202 **4 Claims**

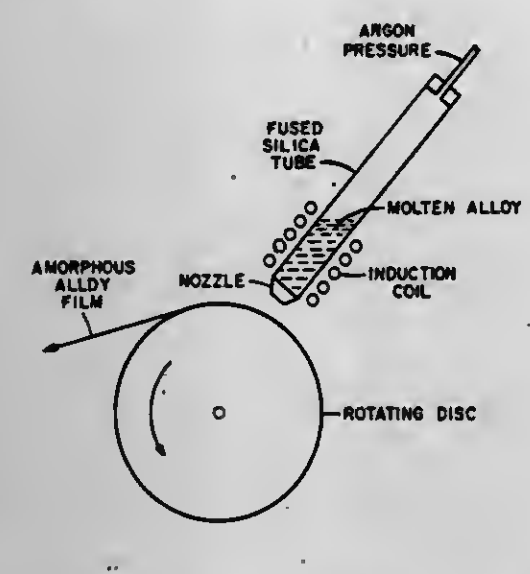

1. A method for preparing large shapes of metallic glasses from precursor finely-dimensioned bodies thereof which comprises:
(a) placing said finely-dimensioned bodies in touching relationship with each other, and then
(b) hot pressing said bodies in a non-oxidizing environment at temperatures ranging from about 25° C. below the glass transition temperature to about 15° C. above the transition temperature of said metallic glass under an applied force of at least 1000 psi for a period of time sufficient to cause the bodies to flow and fuse together into an integral unit.

4,298,383
LOW VISCOSITY COMPOSITION FOR FORMING SHAPED BODIES
John F. Joyce, Granger, Ind., assignor to National-Standard Company, Niles, Mich.
Filed Jun. 25, 1979, Ser. No. 52,010
Int. Cl.³ B22F *1/00, 3/00*
U.S. Cl. 75—211 **30 Claims**

1. A viscoelastic composition for forming shaped bodies comprising at least approximately 50% by weight of a reducible metal compound in particulate form, a binder, a dispersant, and water.

15. A method of making dense metal articles comprising the steps of:
(a) forming a shaped body from a viscoelastic composition comprising approximately 50% by weight of a reducible metal compound in particulate form, a binder, a dispersant, and water;
(b) exposing the shaped body to a reducing environment to reduce the metal compound to free metal particles; and
(c) subjecting the shaped body to a temperature sufficient to effect sintering of the free metal particles to produce a dense metal article.

4,298,384
ANTIFOULING PAINTS FOR MARINE USE
Yael Allingham, and David Vofsi, both of Rehovot, Israel, assignors to Yeda Research and Development Company, Ltd., Rehovot, Israel
Filed Jul. 18, 1979, Ser. No. 58,707
Claims priority, application Israel, Jul. 23, 1978, 55203
Int. Cl.³ C09D *5/14, 5/16*
U.S. Cl. 106—18.34 **5 Claims**

1. An antifouling paint for marine use comprising a conventional paint base of the type used with antifouling paints, containing as active ingredient an effective quantity of a compound of the formula

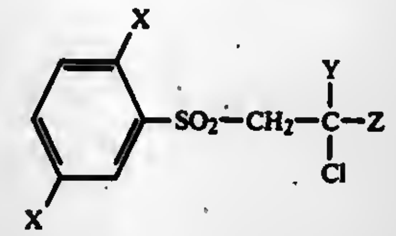

wherein
X is selected from the group consisting of chlorine and bromine;
Y is selected from the group consisting of hydrogen and lower alkyl, and
Z is selected from the group consisting of —COOR where R is lower alkyl.

4,298,385
HIGH-STRENGTH CERAMIC BODIES
Nils Claussen, Warnbronn, and Jörg Steeb, Stuttgart, both of Fed. Rep. of Germany, assignors to Max-Planck-Gesellschaft zur Forderung Wissenschaften e.V., Gottingen, Fed. Rep. of Germany
Continuation of Ser. No. 4,120, Jan. 17, 1979, abandoned, which is a continuation-in-part of Ser. No. 738,409, Nov. 3, 1976, abandoned. This application Jul. 14, 1980, Ser. No. 167,898
Int. Cl.³ C04B *35/00, 35/10, 35/40, 35/71*
U.S. Cl. 501—105 **14 Claims**

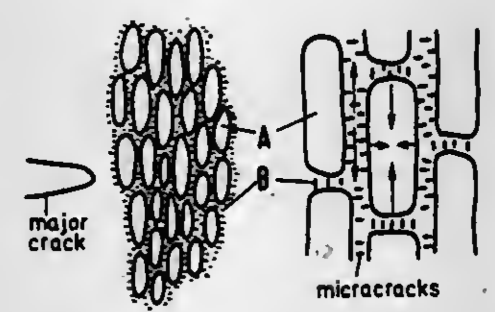

1. A sintered ceramic body of high toughness, consisting of an isotropic ceramic matrix and at least one therein-dispersed phase of ceramic embedment material formed from a powder consisting of particles having an average diameter from 0.3 to 1.25 μm, wherein the ceramic embedment material is present in different enantiotropic solid modifications at the firing temperature of the ceramic body and below the firing temperature, whose densities are substantially different, and the ceramic body is shot through with extremely fine microfractures in high density.

14. Sintered ceramic body of high toughness consisting essentially of a ceramic matrix of Al_2O_3 and at least one phase of ceramic embedment material formed from unstabilized ZrO_2 particles having an average diameter of from 0.3 to 1.25 μm and having a different coefficient of expansion from that of the Al_2O_3 and present in from 4 to 25 volume percent and in different solid modifications having different densities at and below the firing temperature, wherein the ceramic embedment is dispersed into the ceramic matrix and is thereafter shaped, fired and cooled to effect stresses due to the different densities of the modifications and the different coefficients of expansion of the matrix and embedment whereby high toughness results and wherein the ceramic body is shot through with extremely fine microfractures in high density.

4,298,386
CALCIUM SILICATE AND PROCESS FOR PRODUCING SAME
Kazuhiko Kubo, Gifu; Akira Takahashi, Kagamihara, and Kenichi Oohashi, Mitaka, all of Japan, assignors to Kabushiki Kaisha Osaka Packing Seizosho, Osaka, Japan
Filed Sep. 17, 1979, Ser. No. 76,442
Claims priority, application Japan, Feb. 9, 1979, 54-14567
Int. Cl.³ C01B *33/24;* **C04B** *21/00*
U.S. Cl. 501—80 **25 Claims**

1. Globular secondary particles of wollastonite group calcium silicate crystals represented by the formula

$$lCaO.mSiO_2.nH_2O$$

wherein $1 \leq l \leq 6$, $1 \leq m \leq 6$ and $0 \leq n \leq 1$, characterized in that the particles consist essentially of hollow globular secondary particles of the wollastonite group calcium silicate crystals, the globular secondary particles having an average spontaneous sedimentation height of at least 800 ml, an outside diameter of 5 to 110 μm, an average apparent density of 0.04 to 0.09 g/cm³ and an average shell density defined by the equation

$$Y=0.0033X+B$$

wherein Y is the average shell density, X is the average diameter of the particles, B is a constant, 15 μm≦X≦40 μm and 0≦B≦0.115.

4,298,387
AGGLOMERATED MIXTURES OF HIGHLY DISPERSED METAL OXIDES AND OPACIFIERS
Günter Kratel, Durach-Bechen; Hans Katzer, Munich; Stephan Loskot, Kempten; Wilfried Lang, Sulzberg, and Klaus Weis, Munich, all of Fed. Rep. of Germany, assignors to Consortium für Elektrochemische Industrie GmbH, Munich, Fed. Rep. of Germany
Filed Dec. 11, 1979, Ser. No. 102,510
Claims priority, application Fed. Rep. of Germany, Dec. 20, 1978, 2854984
Int. Cl.³ C04B *35/52*
U.S. Cl. 501—92 **7 Claims**

1. In a process for the manufacture of an agglomerated mixture comprising 30–95% by weight of highly dispersed metal oxides produced by flame hydrolysis and 5–70% by weight of inorganic opacifiers that have at least one absorption maximum in the range between 1.5 and 10 μm, selected from the group consisting of inorganic oxides and mixed oxides, carbides and nitrides wherein volatile metal compounds are initially flame hydrolyzed in a combustion zone where they react with a flame to form highly dispersed metal oxides and are then agglomerated in an agglomeration plant, the improvement comprising the steps of:
continuously mixing said inorganic opacifiers with said flame-hydrolyzed metal oxides in the aforesaid percentages in a region in which the flame-hydrolyzed metal oxides are still in the form of primary particles; and
coagglomerating said inorganic opacifiers while agglomerating said metal oxides subsequent to the flame hydrolysis.

4,298,388
ALKALI-FREE SEALING GLASSES FOR MOLYBDENUM
Werner Sack, Mainz, Fed. Rep. of Germany, assignor to Jenaer Glaswerk Schott & Gen., Mainz, Fed. Rep. of Germany
Filed Oct. 8, 1980, Ser. No. 194,979
Claims priority, application Fed. Rep. of Germany, Oct. 11, 1979, 2941215
Int. Cl.³ C03C *3/04*
U.S. Cl. 501—15 **3 Claims**

1. SiO_2-Al_2O_3-alkaline earth oxide glass compositions suitable for glass/molybdenum sealings with high thermal load capability, having coefficients of thermal expansion in the temperature range of 20° to 300° C. of $4.6\text{-}5.1\times10^{-6}$/°C., glass transformation temperatures (Tg) of 775°–810° C., softening temperatures (Ew) greater than 930° C., processing temperatures (V_A) of 1232°–1273° C. and a length of V_A-Ew greater than 300° C. as regards processing technology of these glasses in the mixture, which consist essentially of the following components, computed as percent by weight oxides:

SiO_2	57.00–64.00 wt %
Al_2O_3	12.50–16.50 wt %
ZrO_2	1.00–5.50 wt %
$Al_2O_3 + ZrO_2$	15.00–19.00 wt %
CaO	11.50–19.20 wt %
BaO	0–6.50 wt %
CeO_2	0–8.00 wt %
TiO_2	0–4.50 wt %
$CaO + BaO + CeO_2 + TiO_2$	18.60–25.70 wt % and
As_2O_3	0–0.30 wt %

4,298,389
HIGH TRANSMISSION GLASSES FOR SOLAR APPLICATIONS
Lauren K. Johnson, Corning, and David A. Thompson, Horseheads, both of N.Y., assignors to Corning Glass Works, Corning, N.Y.
Filed Feb. 20, 1980, Ser. No. 123,047
Int. Cl.³ C03C *3/08*
U.S. Cl. 501—77 **2 Claims**

1. A glass sheet suitable for use as a solar heliostat glass for a backside reflecting mirror demonstrating a solar transmission (350–2100 nm) through a 2.54 mm thickness in excess of 90%, which has a viscosity at the liquidus in excess of 10^5 poises, a softening point of no more than about 760° C., an annealing point of no more than about 575° C., and a strain point of no more than about 535° C., which exhibits long term stability against devitrification when in contact with platinum and refractory ceramics, which is virtually unaffected by solarization, and which displays excellent resistance to weathering consisting essentially, expressed in weight percent on the oxide basis as calculated from the batch, of about

Al_2O_3	7-13
B_2O_3	7-10
Na_2O	6-11
CaO	2-5
K_2O	2-7
TiO_2	0.1-1
As_2O_3	0.2-1
Sb_2O_3	0-1
SiO_2	Balance

and also containing iron in the form of impurities up to 0.1%, expressed in terms of Fe_2O_3, wherein essentially all of the iron is present in the Fe^{+3} state.

4,298,390

FLUOROPHOSPHATE OPAL GLASSES

James E. Flannery, Corning; John L. Stempin, Beaver Dams, and Dale R. Wexell, Corning, all of N.Y., assignors to Corning Glass Works, Corning, N.Y.

Filed Aug. 13, 1980, Ser. No. 177,627

Int. Cl.[3] **C03C** *3/04, 3/08*

U.S. Cl. 501—32 **2 Claims**

1. A spontaneous opal glass demonstrating a dense white appearance, a softening point of at least 710° C., excellent chemical durability, and containing $Ba_2F(PO_4)$ as the predominant crystalline opal phase consisting essentially, expressed in terms of weight percent on the oxide basis, of 6-10% Na_2O, 1-6% K_2O, 4-11% BaO, 9-18% Al_2O_3, 1-5% B_2O_3, 50-70% SiO_2, 3.5-7% P_2O_5, and 1-4% F.

4,298,391

HOT REPAIR GUN REFRACTORY MIX FOR A LINING REFRACTORY

Masahiro Hayase; Hiroyuki Sugimoto, and Mitsuteru Takemoto, all of Okayama, Japan, assignors to Shinagawa Refractories Co., Ltd., Tokyo, Japan

Filed Dec. 31, 1979, Ser. No. 108,677

Claims priority, application Japan, Apr. 19, 1979, 54-47216

Int. Cl.[3] **C04B** *35/52*

U.S. Cl. 501—89 **12 Claims**

1. A hot repair gun refractory mix comprising: (a) 5-70% by weight of a granulated material which includes a particulate carbonaceous substance having a particle size of 1 to 5 mm and containing 5 to 40% by weight of resin which is covered with a fine refractory powder by use of an water-soluble inorganic binder (b) 1 to 15% by weight of a binding plasticizer and (c) the remainder being refractory aggregrate and fine powder.

4,298,392

ACCELERATOR FOR SETTING OF CEMENTS

Piet H. Isselmann, Uithoorn, Netherlands, assignor to Akzona Incorporated, Asheville, N.C.

Filed Jun. 5, 1980, Ser. No. 156,824

Claims priority, application Netherlands, Jun. 11, 1979, 7904551

Int. Cl.[3] **C04B** *7/02*

U.S. Cl. 106—98 **12 Claims**

1. An additive for hydraulic cement comprising of a silica sol and one or more compounds of the formula

R—S—C≡N

wherein for each compound, R is independently selected from the class consisting of alkali metals and alkaline earth metals.

4,298,393

METHOD AND SYSTEM FOR BURNING FINE-GRAINED MATERIAL, PARTICULARLY FOR THE MANUFACTURE OF CEMENT CLINKERS

Kunibert Brachthäuser, Bergisch Gladbach, and Horst Herchenbach, Troisdorf, both of Fed. Rep. of Germany, assignors to Klöckner-Humboldt-Deutz AG, Fed. Rep. of Germany

Filed Aug. 2, 1979, Ser. No. 63,102

Claims priority, application Fed. Rep. of Germany, Aug. 2, 1978, 2833774

Int. Cl.[3] **C04B** *7/44*

U.S. Cl. 106—100 **4 Claims**

1. In a method of calcining a raw meal in an installation having a pre-heating system which receives on the order of 65% of the total heat energy required for the sintering process and which feeds partly calcinated material to a rotary kiln wherein the calcining process is completed, an improvement comprising the steps of:

supplying on the order of 15% of the total heat requirement by burning fossil fuels in the kiln, and

supplying the remaining heat required by means of heat generators in the kiln that produce no exhaust gases.

4,298,394

ORGANIC GYPSUM SET ACCELERATORS

Peter A. Leeming; Dimitrios Mitakidis, and Peter F. Woodrow, all of Oakville, Canada, assignors to BPB Industries Limited, London, England

Filed Jun. 28, 1979, Ser. No. 52,754

Claims priority, application Canada, Jul. 26, 1978, 308157

Int. Cl.[3] **C04B** *11/14*

U.S. Cl. 106—111 **18 Claims**

1. A gypsum set accelerator for use in the production of gypsum wallboard comprising gypsum incorporating an effective set accelerating increasing amount up to 20 percent by weight of the gypsum of at least one synthetic solid water-soluble detergent.

4,298,395

ACTIVATED POLYMERIC CARRIERS

Dietrich Hildebrand, Odenthal, Fed. Rep. of Germany, and Thomas Gribnau, Nijmegen, Netherlands, assignors to Bayer Aktiengesellschaft, Leverkusen, Fed. Rep. of Germany

Continuation of Ser. No. 792,295, Apr. 29, 1977, abandoned. This application Nov. 20, 1978, Ser. No. 962,360

Claims priority, application Fed. Rep. of Germany, May 3, 1976, 2619521

Int. Cl.[3] **C08L** *1/02, 5/12;* **C12N** *11/06, 11/10*

U.S. Cl. 106—163 R **10 Claims**

1. An activated polymeric carrier having at least one unit thereof of the formula:

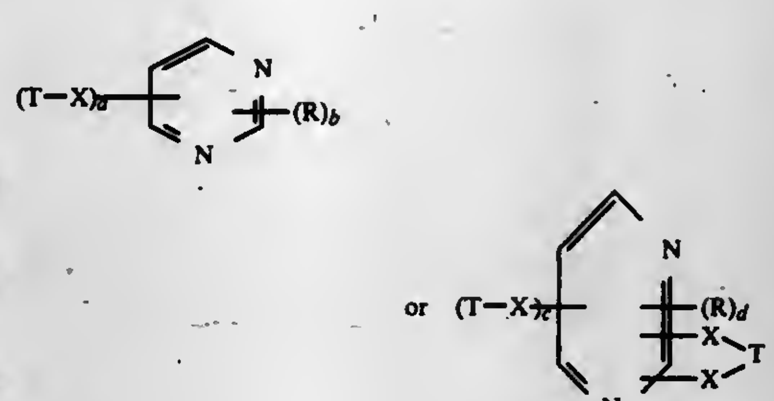

wherein

T represents atoms of the polymeric carrier selected from the group consisting of agarose, crosslinked dextran, cellulose, polyacrylamide and aminoethylated polystyrene resin;

X is a divalent oxygen or sulfur atom, —NH—, —NHR[5]—, —CONH— or —CONR[5]—, wherein R[5] is lower alkyl;

R is independently hydrogen, hydroxyl, lower alkyl, lower alkoxy, loweralkylthio, loweracylamino, nitro, cyano, carboxamide, loweralkylsulphonyl, loweralkoxycarbonyl, phenyl, trifluoromethyl or chloromethyl, provided that at least one R is halogen; and

a is 1 or 2, b is 4-a, c is 0 or 1 and d is 2-c.

5. A process for the production of the activated polymeric carrier of claim 1, in which a polymeric carrier containing at least one OH, —SH, —NH_2, —NHR[5] lower alkyl, —$CONH_2$ or —CONHR[5], in which R[5] is lower alkyl, is reacted in an organic or organic-aqueous solvent, at a temperature of between about −10° and about +30° C., with a halogenopyrimidine of the formula:

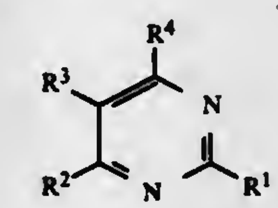

in which each of R[1], R[2], R[3] and R[4] is independently hydrogen, halogen, hydroxyl, lower alkyl, lower alkoxy, loweralkylthio, loweracylamino, nitro, cyano, carboxamido, loweralkylsulphonyl, loweralkoxycarbonyl, phenyl, trifluoromethyl or chloromethyl, provided at at least two of R[1] to R[4] is halogen.

4,298,396

PITCH COMPOSITIONS

Abe Limonchik, Montreal, and Neil G. Richardson, St. Laurent, both of Canada, assignors to Domtar Inc., Montreal, Canada

Filed Apr. 21, 1980, Ser. No. 142,226

Int. Cl.[3] **C08L** *95/00*

U.S. Cl. 106—273 R **8 Claims**

1. A pitch composition comprising:

(a) a pitch material; and

(b) an active component comprising at least one of a class of: halogenated organic compounds which decompose at temperatures between the softening point and the carbonization temperature of the pitch material,

wherein said component is present in an amount effective to reduce significantly the carbon dioxide oxidation rate of the carbonization product of said pitch composition relative to the carbon dioxide oxidation rate of the carbonization product of said pitch material and constitutes at most 2% by weight of said composition.

4,298,397

ASPHALT-SULFUR EMULSION COMPOSITION

Michael V. Burris, 1760 Industrial Rd., Las Vegas, Nev. 89102

Continuation-in-part of Ser. No. 1,536, Jan. 8, 1979, Pat. No. 4,211,575, which is a continuation-in-part of Ser. No. 726,946, Sep. 27, 1976, abandoned. This application Apr. 14, 1980, Ser. No. 139,639

The portion of the term of this patent subsequent to Jul. 8, 1997, has been disclaimed.

Int. Cl.[3] **C08L** *95/00;* **C09D** *3/24*

U.S. Cl. 106—274 **13 Claims**

1. An asphalt-emulsion composition comprising:

an asphalt phase consisting essentially of between about 50 and about 98% paving grade asphalt, between about 1 and about 10% added sulfur over and above the amount of any residual sulfur in said asphalt, and between about 1 and about 35% of a liquid petroleum hydrocarbon having a boiling point above about 200° F., and

a water phase having between about 0.05 and about 10.0%, by weight, based on the total composition, of an emulsifier selected from the group consisting of cationic, anionic, and nonionic emulsifiers and mixtures thereof.

4,298,398

PROCESS FOR CONVERTING PREMILLED CRUDE QUINACRIDONE TO PIGMENTARY FORM

Patrick H. Fitzgerald, Pitman, N.J., assignor to E. I. Du Pont de Nemours and Company, Wilmington, Del.

Filed Aug. 28, 1980, Ser. No. 181,958

Int. Cl.[3] **C09B** *48/00*

U.S. Cl. 106—288 Q **6 Claims**

1. A process for converting premilled crude quinacridone to pigmentary form by contacting the premilled quinacridone with an aqueous alkaline medium having a pH of at least 10 in an amount sufficient to intimately contact the premilled crude quinacridone at a temperature of at least 85° C. in the presence of at least one quaternary ammonium compound of the formula $(n\text{-}C_4H_9)_3R\text{-}N^+ X^-$ where R- is —CH_3n-C_4H_9, —$CH_2C_6H_5$, —C_2H_5, or n-C_3H_7 and X^- is Cl^-, Br^-, I^-,

$$O^-\overset{\displaystyle O}{\overset{\|}{C}}CH_3,$$

OH^-, or NO_3^-, wherein the quaternary ammonium compound is present in an amount of from 2 to 15% by weight, based on the weight of the premilled crude quinacridone.

4,298,399

PROCESS FOR SALT GRINDING OF PIGMENTS

Francis A. Formica, Tinton Falls, and James B. Izenberg, Metuchen, both of N.J., assignors to International Pigment Processing Corp., Paterson, N.J.

Filed Jun. 11, 1980, Ser. No. 158,615

Int. Cl.[3] **B02C** *23/18*

U.S. Cl. 106—309 **7 Claims**

1. In a process in which a finely divided crystalline organic pigment is produced from a coarser crude crystalline organic pigment by grinding the coarse pigment in the presence of a water soluble inorganic salt as the grinding media and a water soluble conditioning agent as the grinding aid and thereafter separating the resulting finely divided organic pigment from said salt and said conditioning agent, wherein the proportion of inorganic salt to pigment is from about 3 and up to 20 parts by weight of salt for each part by weight or organic pigment, the improvement which comprises providing as the conditioning agent a water soluble viscous material selected from the group consisting of corn syrup, corn syrup solids and molasses and the proportion of conditioning agent to pigment is between about ½ and 4 parts by weight of conditioning agent to each part by weight of organic pigment.

4,298,400

LOW D.E. STARCH CONVERSION PRODUCTS

Frederick C. Armbruster, LaGrange, Ill., assignor to Grain Processing Corporation, Muscatine, Iowa

Division of Ser. No. 107,426, Jan. 18, 1971, Pat. No. 3,853,706, which is a continuation-in-part of Ser. No. 626,952, Mar. 30, 1967, abandoned. This application Jul. 12, 1974, Ser. No. 487,944

The portion of the term of this patent subsequent to May 16, 1989, has been disclaimed.

Int. Cl.[3] **C13K** *1/06*

U.S. Cl. 127—29 **6 Claims**

1. A non-waxy cereal starch hydrolyzate having a dextrose equivalent value in the range from about 5 to about 20, and being characterized in that the observed value of A for a given product does not exceed by more than 25% the value of A that is calculated from one of the following equations for a product having the dextrose equivalent value of the given product, wherein A is the iodine absorbency value at 500 millimicrons expressed on a 5 centimeter cell basis and calculated to a concentration of 1 milligram of dry substance per milliliter:

Equation 1:

when the dextrose equivalent value is from about 5 to about 10:

log A = −0.1830 dextrose equivalent value + 2.606, and

Equation 2:

when the dextrose equivalent value is from about 10 to about 20:

log A = −0.0905 dextrose equivalent value + 1.683.

4,298,401

BREAKDOWN VOLTAGE RESISTOR OBTAINED THROUGH A DOUBLE ION-IMPLANTATION INTO A SEMICONDUCTOR SUBSTRATE, AND MANUFACTURING PROCESS OF THE SAME

Jean-Paul Nuez, Mennecy, and Gerard Lebesnerais, Perthes en Gatinais, both of France, assignors to International Business Machines Corp., Armonk, N.Y.

Filed Nov. 19, 1979, Ser. No. 95,817

Claims priority, application France, Dec. 28, 1978, 78 37092

Int. Cl.³ H01L *3/22, 21/265, 29/90*

U.S. Cl. 148—1.5 **5 Claims**

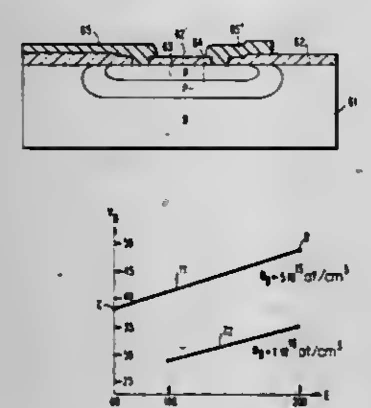

1. A process of forming an implanted resistor in a semiconductor substrate of a first type of conductivity, comprising the following steps:

implanting a impurity of a second type of conductivity opposite to said first type of conductivity into a region of the substrate, at a first heavy dose within about 10^{12}–10^{15} at/cm^2, at a low energy within about 20–120 KeV in order to define the required value of the resistor and bring about a low TCR,

implanting an impurity of said second type of conductivity into said region, at a second dose within about 10^{11}–10^{14} at/cm^2, which is lighter than said heavy dose, and at a higher energy within about 120–400 KeV, in order to ensure an improved breakdown voltage without substantially modifying the required value of the resistor, and

annealing the substrate, the ratio of atoms implanted in said heavy dose to the atoms implanted in said lighter dose being at least about 10.

4,298,402

METHOD OF FABRICATING SELF-ALIGNED LATERAL BIPOLAR TRANSISTOR UTILIZING SPECIAL MASKING TECHNIQUES

Hemraj K. Hingarh, San Jose, Calif., assignor to Fairchild Camera & Instrument Corp., Mountain View, Calif.

Filed Feb. 4, 1980, Ser. No. 118,291

Int. Cl.³ H01L *21/265, 21/20*

U.S. Cl. 148—1.5 **1 Claim**

1. A method for fabricating an integrated injection logic cell in a semiconductor body, said cell comprising a lateral bipolar injection transistor and a vertical bipolar transistor, comprising the steps of:

(a) forming a first layer of dopant masking material on a surface of said semiconductor body, said surface being of a first conductivity type, said first layer comprising a first tier of silicon oxide overlaying said surface, a second tier of silicon nitride overlaying said first tier, and a third tier of silicon oxide overlaying said second tier;

(b) forming a second layer of undoped polycrystalline silicon on said first layer of dopant masking material;

(c) forming a third layer of silicon oxide on the surface of the second layer;

(d) removing a portion of said third layer of silicon oxide and underlaying portion of said second layer of undoped polycrystalline silicon by photoresist masking and selective etching thereby exposing an edge portion of said second layer;

(e) diffusing dopant into said exposed edge portion of said second layer thereby forming a doped portion of said second layer;

(f) removing said third layer of silicon oxide;

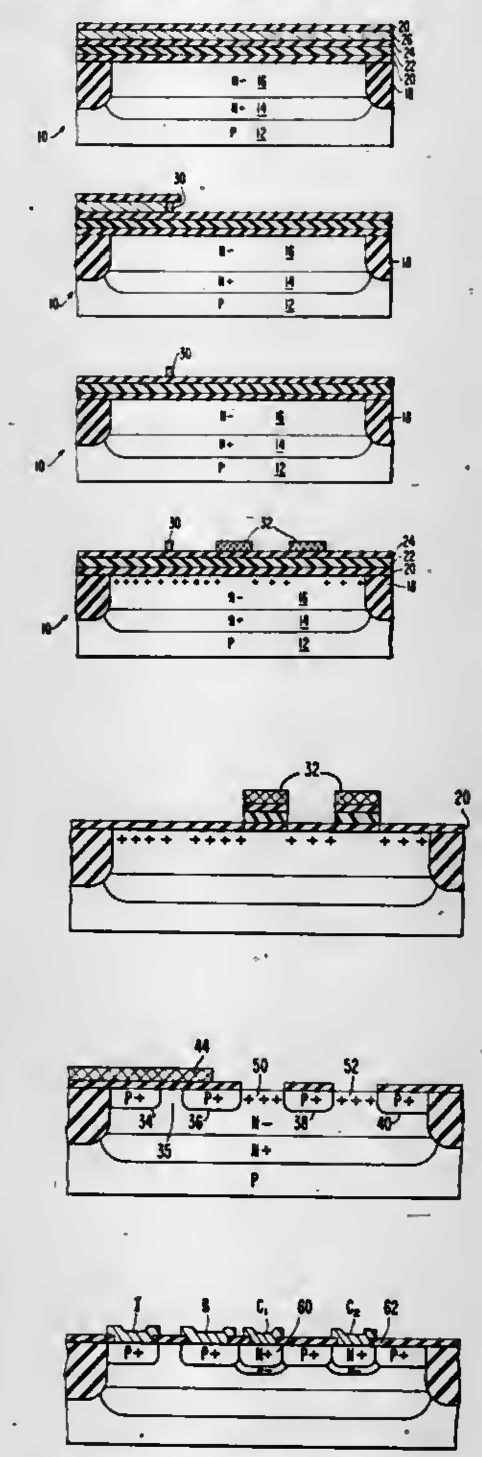

(g) removing said undoped second layer by preferential etchant such that said doped portion of said second layer remains intact;

(h) implanting a dopant of opposite conductivity type into said surface of said semiconductor body using said doped portion of said second layer as an implant mask thereby forming surface regions in said semiconductor body of said opposite conductivity type separated by a surface region of said first conductivity type;

(i) selectively applying a resist over said first layer prior to said step of implanting a dopant of opposite conductivity type whereby a collector region of said vertical bipolar transistor is masked from implanted dopant of opposite conductivity type;

(j) heating said silicon conductor body to drive in said dopant of opposite conductivity type and increasing the thickness of said silicon oxide over the surface region of implanted dopant of opposite conductivity type;

(k) removing said resist and first layer underlaying said resist;

(l) applying a resist layer overlaying the base region of said lateral transistor;

(m) immplanting dopant of opposite conductivity in said semiconductor body in the collector region of said vertical bipolar transistor; and

(n) diffusing dopant of first conductivity type into said exposed collector region.

4,298,403

ION-IMPLANTED EVAPORATED GERMANIUM LAYERS AS N+ CONTACTS TO GAAS

John E. Davey, 3212 Wessynton Way, Alexandria, Va. 22309, and Aristos Christou, 7064 Leewood Forest Rd., Springfield, Va. 22151

Filed Feb. 28, 1980, Ser. No. 125,426

Int. Cl.³ H01L *29/161, 23/48, 7/38, 21/265*

U.S. Cl. 148—1.5 **11 Claims**

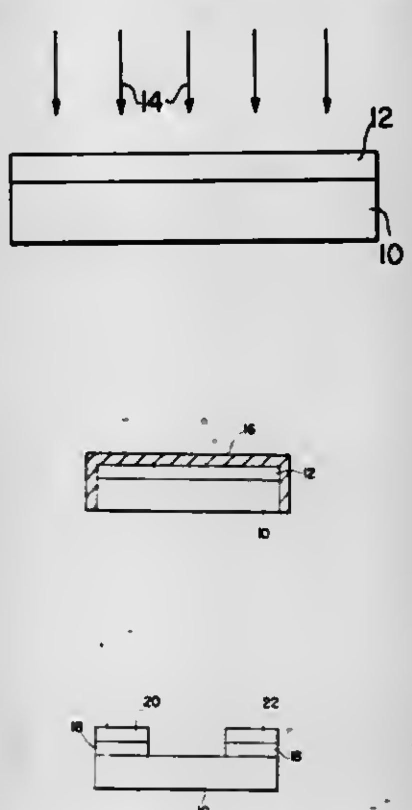

1. A method for forming n$^+$ contacts for GaAs devices which comprises:

depositing a p-type Ge film onto a GaAs substrate,

implanting ions of arsenic or phosphorous into said Ge film to a desired depth,

capping said Ge film on the top and sides and on the sides of the GaAs substrate with an oxide,

annealing said capped Ge film-GaAs substrate in an inert gas ambient at a sufficient temperature over a sufficient time period to over-compensate the p-type Ge layer to change the p-type layer to an n$^+$ layer,

removing the oxide cap,

etching said n$^+$ Ge film to form contact areas, and

depositing an ohmic metallization on the contact areas.

4,298,404

CHROMIUM-FREE OR LOW-CHROMIUM METAL SURFACE PASSIVATION

Joseph L. Greene, New Hudson, Mich., assignor to Richardson Chemical Company, Des Plaines, Ill.

Filed Sep. 6, 1979, Ser. No. 72,988

Int. Cl.³ C23C *7/18, 9/00*

U.S. Cl. 148—6.14 A **31 Claims**

1. An acidic aqueous bath for the passivation treatment of a substrate having a metal surface, comprising: an organic activating agent, said organic activating agent being a carboxylic acid having between about 2 and about 12 carbon atoms and being selected from the group consisting of polyhydroxy carboxylic acids, polycarboxylic acids, bath-soluble derivatives thereof and combinations thereof, in combination with one or more bath-soluble film-forming agents, at least one of said agents being a chromium-free film-forming agent selected from the group consisting of fluoride salts, oxalate salts, malonate salts, succinate salts, and combinations thereof, said chromium-free film-forming agent including a nonchromium film-forming element that forms a thin, adherent and coherent hydrophobic passivation coating onto a substrate having a metal surface, said film-forming element being selected from the group consisting of aluminum, silicon, titanium, vanadium, iron, cobalt, molybdenum, cerium, and combinations thereof, said chromium-free film-forming agent being a bath-soluble fluoride complex including at least one of said non-chromium film-forming elements, and said organic activating agent, whether added as said film-forming agent, as said organic activating agent, or as any other bath additive, is present at a concentration up to about 0.3 weight percent, expressed as oxalic acid, per volume, based on the total bath volume, said bath including a strong acid and having an operative pH range between values high enough to avoid chemical polishing and etching of the metal surface and low enough to maintain a desired rate of passivation reaction.

4,298,405

PROCESS FOR PRODUCING IRON PHOSPHATE COATINGS AT AMBIENT TEMPERATURE

J. Arthur Saus, Greenville, and Larry P. McCartney, Grier, both of S.C., assignors to Intex Products, Inc., Greenville, S.C.

Filed Mar. 24, 1980, Ser. No. 133,117

Int. Cl.³ C23F *7/10*

U.S. Cl. 148—6.15 R **13 Claims**

1. A process for forming an iron phosphate conversion coating on a ferrous metal surface at ambient temperature, said process comprising applying at a temperature of from about 50° F. to about 100° F. to a ferrous metal surface an aqueous acidic phosphating solution having a pH within the range of 3 to 6 and comprising a source of phosphate consisting essentially of orthophosphate ions at a concentration of at least about 2.0 grams per liter and an ambient temperature activator comprising nitrite ions at a concentration of at least 0.08 grams per liter.

4,298,406

MANUFACTURE OF STEEL PRODUCTS

Malcolm Brownlee, Middlesbrough, and Thomas C. Harrison, Bishop Aukland, both of England, assignors to British Steel Corporation, London, England

Continuation-in-part of Ser. No. 918,577, Jun. 23, 1978, abandoned. This application Nov. 13, 1979, Ser. No. 93,226

Claims priority, application United Kingdom, Nov. 3, 1977, 45765/77

Int. Cl.³ C21D *1/25, 8/08*

U.S. Cl. 148—12 B **8 Claims**

1. A process for the production of welded steel mesh for the reinforcement of concrete, including the steps of hot rolling in a rolling mill semi-killed or killed carbon-manganese steel rod having a manganese content of not more than about 0.78%, the rod exiting from the last stand of the mill with a temperature in

excess of 1000° C., superficially cooling the rod in water from this temperature to an equalisation temperature between 300° C. and 700° C. so as to produce a martensitic or bainitic outer surface layer, laying the rod on a moving conveyor in the form of flat overlapping non-concentric rings, cooling the rod in air

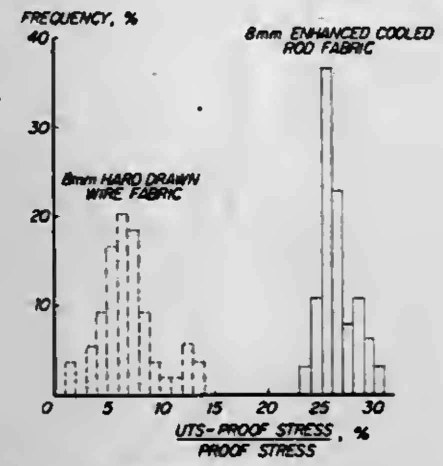

DISTRIBUTION OF $\frac{\text{UTS-PROOF STRESS}}{\text{PROOF STRESS}}$ X 100 VALUES FROM HARD DRAWN WIRE AND ENHANCED COOLED ROD FABRICS

on the conveyor so as to temper the martensitic or bainitic layer, collecting the rings in coils and without effecting any drawing or mechanical working on the rod, arranging the rod in the form of a mesh, and welding the lengths of rod to one another where the rods overlap.

4,298,407

FLUX TREATED SOLDER POWDER COMPOSITION

Barry E. Taylor, Youngstown, N.Y., assignor to E. I. Du Pont de Nemours and Company, Wilmington, Del.

Filed Aug. 4, 1980, Ser. No. 175,272

Int. Cl.³ B23K *35/34*

U.S. Cl. 148—24 **28 Claims**

1. A tin alloy solder powder composition comprising finely divided particles of tin alloy coated with a thin substantially continuous layer of an organic flux, sufficient to lower the electrical conductivity of and to obscure the eutectic metal domains on the surface of the alloy particles.

4,298,408

ALUMINUM-TITANIUM-BORON MASTER ALLOY

C. Ray Langdon, Pottstown, and Alan R. Burkart, Reading, both of Pa., assignors to Cabot Berylco Inc., Reading, Pa.

Filed Jan. 7, 1980, Ser. No. 110,159

Int. Cl.³ C22C *21/00*

U.S. Cl. 148—32 **4 Claims**

1. A wrought master alloy having sufficient ductility to be worked into a continuous coil of ⅜-inch rod and consisting essentially of, in weight percent; 7.5 to 10 titanium, 0.3 to 0.6 boron and the balance aluminum plus incidental impurities.

4,298,409

METHOD FOR MAKING IRON-METALLOID AMORPHOUS ALLOYS FOR ELECTROMAGNETIC DEVICES

Nicholas J. DeCristofaro, Chatham; Alfred Freilich, Livingston, and Davidson M. Nathasingh, Stanhope, all of N.J., assignors to Allied Chemical Corporation, Morris Township, Morris County, N.J.

Continuation-in-part of Ser. No. 101,934, Dec. 10, 1979, Pat. No. 4,249,969, which is a division of Ser. No. 42,472, May 25, 1979, Pat. No. 4,219,335. This application Mar. 25, 1980, Ser. No. 133,774

The portion of the term of this patent subsequent to Aug. 26, 1997, has been disclaimed.

Int. Cl.³ H21D *1/04*

U.S. Cl. 148—108 **7 Claims**

1. A method of enhancing the magnetic properties of a metal alloy which is at least 90 percent amorphous and consisting essentially of a composition having the formula $Fe_aB_bSi_cC_d$ wherein "a", "b", "c" and "d" are atomic percentages ranging from about 80.0 to 82.0, 12.5 to 14.5, 2.5 to 5.0 and 1.5 to 2.5, respectively, with the proviso that the sum of "a", "b", "c" and "d" equals 100, which method comprises the step of annealing said alloy at a temperature ranging from about 380°–410° C.

4,298,410

METHOD FOR GROWING A LIQUID PHASE EPITAXIAL LAYER ON A SEMICONDUCTOR SUBSTRATE

Koichiro Nakajima, Koganei, and Masaharu Watanabe, Yokosuka, both of Japan, assignors to Tokyo Shibaura Denki Kabushiki Kaisha, Japan

Filed Jun. 5, 1980, Ser. No. 156,593

Claims priority, application Japan, Jun. 6, 1979, 54-70145

Int. Cl.³ H01L *21/208*

U.S. Cl. 148—172 **3 Claims**

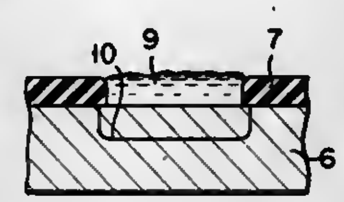

1. A method for selectively growing a liquid phase epitaxial layer based on a liquid phase epitaxy, comprising the steps of arranging a liquid phase epitaxial solution apart from a semiconductor substrate having an insulating layer selectively formed on the surface,

heating the substrate and the epitaxial solution to a predetermined temperature and, then, bringing them into mutual contact,

selectively removing the solution such that the solution remains on the exposed surface of the substrate, with the insulating layer bearing substantially no solution, and

cooling the substrate and the solution at a predetermined cooling rate so as to grow a liquid phase epitaxial layer on the exposed surface of the substrate.

4,298,411

CROSSLINKED SMOKELESS PROPELLANTS

James H. Godsey, Cumberland, Md., assignor to Hercules Incorporated, Wilmington, Del.

Filed Jul. 14, 1969, Ser. No. 842,088

Int. Cl.² C06B *45/10*

U.S. Cl. 149—19.4 **13 Claims**

1. A smokeless crosslinked double-base propellant comprising by weight

(a) from about 7% to about 17.0% nitrocellulose,
(b) from about 27% to about 63% energetic plasticizer,
(c) from about 4% to about 12% of a crosslinking agent which is a prepolymer prepared by reaction of a hydroxy-terminated polyester and a diisocyanate,
(d) from about 0% to about 8% non-energetic plasticizer,
(e) from about 0.5% to about 6% of lead salt,
(f) from about 0.1% to about 0.9% carbon black, and
(g) from about 0% to about 60% of oxidizer comprising cyclotrimethylene trinitramine, cyclotetramethylene tetranitramine, and mixtures thereof.

4,298,412

GAS GENERATOR COMPOSITION FOR PRODUCING COOL EFFLUENT GASES WITH REDUCED HYDROGEN CYANIDE CONTENT

Richard A. Biddle; Calvin W. Vriesen, both of Newark, Del., and Ernest S. Sutton, Landenberg, Pa., assignors to Thiokol Corporation, Newtown, Pa.

Filed May 4, 1979, Ser. No. 35,956

Int. Cl.³ C06B *45/10*

U.S. Cl. 149—19.5 **5 Claims**

1. A gas generator composition which produces less than about 0.7 mole percent of HCN upon combustion consisting essentially of a binder component, a polynitrate ester plasticizer component, N,N'-dihydroxyethane diamide and about 2% to about 8% by weight of a HCN scavenger component selected from the group consisting of cupric oxalate, ferrous oxalate, hydrates of ferrous oxalate, Fe_3O_4 and mixtures thereof.

4,298,413

METHOD AND APPARATUS FOR PRODUCING CONCRETE PANELS

John W. Teare, 26 Hollytree Ct., Hamilton, Ohio 45011

Filed Mar. 3, 1980, Ser. No. 126,192

Int. Cl.³ B28B *1/16, 1/30, 5/02;* **B65H** *29/24, 29/26;* **B29C** *17/10*

U.S. Cl. 156—42 **14 Claims**

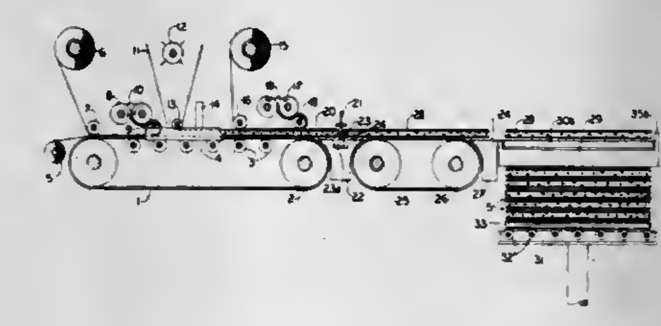

1. A process for producing fabric-reinforced concrete panels which comprises

depositing a web of disposable carrier material on a conveyer belt

laying down a continuous strip of fabric-concrete composite by successively depositing on said carrier web
- a web of reinforcing fabric
- a layer of hydraulic cement slurry
- a core mix consisting of lightweight aggregate, hydraulic cement and water
- a web of reinforcing fabric, and
- a layer of hydraulic cement slurry

cutting said strip including said carrier web into individual panels

transferring each panel seriatim to an air-float stacking unit positioned over a stacking table adapted to support said panels, said stacking unit including an air-film cover of an air-frame having a slightly larger than panel size opening and a substantially confined space therebelow within which a cushion of air may be developed,

withdrawing rapidly the air-film cover from beneath the panel while providing air cushion under the panel in said space thereby obviating bowing or sagging of the panel in movement through the opening and into said space for stacking on said stacking table, and

transferring the stack of panels wherein each panel is separated from an adjacent panel in the stack by a layer of said disposable carrier material to a curing operation.

4,298,414

METHOD OF FORMING THREE DIMENSIONAL RELIEF MAPS

Jean M. Lataple, 114 Avenue Jean de Noailles, 06400 Cannes, and Georges Pizzolitto, 96 Avenue des Arenes a, Nice Alpes Maritimes, both of France

Continuation of Ser. No. 839,934, Oct. 6, 1977, abandoned. This application Oct. 5, 1979, Ser. No. 82,167

Claims priority, application France, Oct. 14, 1976, 76 31458

Int. Cl.³ B29C *27/14;* **B44C** *1/10;* **G09B** *29/12*

U.S. Cl. 156—59 **4 Claims**

1. A method of forming a three dimensional relief map comprising the steps of employing a predetermined number of identical planar maps having intervals of contour lines drawn thereon, cutting each map in sequence to provide from each of said maps a section defined along one edge by a first contour line and along a second edge by a second contour line spaced at a selected interval therefrom, with at least one contour line intermediate and less than the total extent of said map, the one edge of each section cut from each succeeding map in said sequence being defined by the next adjacent succeeding contour line in order from that of the one edge of the section cut from the preceding map until at least one section from each map is cut, and thereafter cyclically repeating the cutting of said maps in successive order until a selected number of successive sections are obtained, and thereafter superimposing said sections one on the other in order of the next adjacent succeeding contour line one upon the other until said relief map is completed.

4,298,415

BRANCH-OFF METHOD

Jean-Marie E. Nolf, Hamme-Mille, Belgium, assignor to N.V. Raychem S.A., Kessel-lo, Belgium

Filed Dec. 27, 1978, Ser. No. 973,614

Claims priority, application United Kingdom, Jan. 9, 1978, 631/78

Int. Cl.³ B29C *27/24;* **B32B** *31/26*

U.S. Cl. 156—85 **41 Claims**

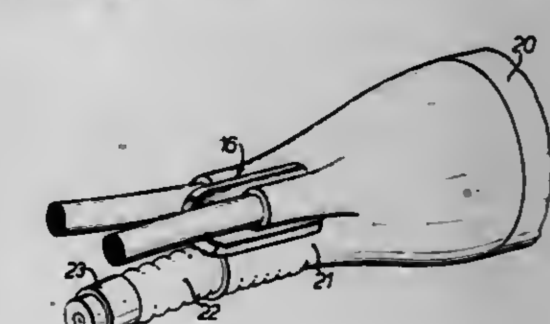

1. A method of forming a branch-off seal between a heat-shrinkable sleeve and at least two substrates, which comprises the steps of

(a) positioning a clip having elongate legs and formed as a trident over the heat-shrinkable sleeve at the end thereof so as to form at least two terminal conduits, wherein the central leg of the clip passes inside the heat-shrinkable sleeve;
(b) positioning the substrates within the conduits; and
(c) applying heat so as to effect shrinkage and to form the desired seal.

4,298,416

PROTECTION OF SUBSTRATES AGAINST CORROSION

Harold V. Casson, Kingston; Grant G. Crabtree, Napanee; Bruno Kindl, Kingston, and Edward B. Noonan, Kingston, all of Canada, assignors to Huron Chemicals Limited, Kingston, Canada

Continuation-in-part of Ser. No. 748,437, Dec. 8, 1976, abandoned. This application Apr. 5, 1979, Ser. No. 27,435

Int. Cl.³ B32B *31/12;* B65D *25/14;* B32B *15/14, 17/06*

U.S. Cl. 156—87 **30 Claims**

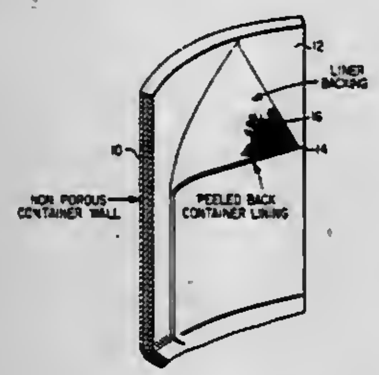

1. In a method of imparting improved corrosion resistance to a substrate which is susceptible to corrosion by action of a corrosive chemical containing and gas containing medium, with which said substrate comes into contact, wherein said substrate is coated with an elastomeric material of a known gas permeability, and which is resistant to the corrosive action of said corrosive chemical containing and gas containing medium and which coating prevents said corrosive medium from reaching said substrate and wherein said coating may suffer loss of adhesion caused by gas build-up between said coating and said substrate the improvement which comprises providing means for escape of said gases carrying gas build-up from between said coating and the supporting substrate, said means for escape of gases including a porous backing material upon which said elastomeric coating is deposited, said backing material being adhesively secured to said substrate and serving to prevent a build-up of said gases between said coating and said substrate which would tend to dislodge the coating from the substrate, and thereby maintaining the adhesive of the coating to the substrate, said elastomeric coating having a suitable viscosity during application to said porous backing material so that the rate of escape of gases through the porous backing will be substantially greater than the rate of permeation of gases through the coating.

8. A method of imparting improved corrosion resistance to a substrate which is susceptible to corrosion by action of a corrosive chemical and gas-containing medium or by a corrosive chemical and gas-generating medium with which said substrate comes into contact, said method comprising: applying an elastomer coating to a porous backing material, said elastomer being of a known gas permeability, and being resistant to the corrosive action of said corrosive medium, the elastomer having a suitable viscosity during application to said porous material to enable said elastomer to penetrate into the porous backing in a controlled manner, so that the rate of escape of gases through the porous backing will be substantially greater than the rate of permeation of gases through the coating, and adhesively securing said backing material to said substrate, said coating thereby preventing said corrosive medium from reaching the substrate, and said porous backing material providing means for escape of gases permeating said coating, from between said coating and the supporting substrate, said means for escape of gases serving to prevent a build-up of gases between said coating and said substrate which would tend to dislodge the coating from the substrate, whereby the adhesion of said coating to said substrate is maintained.

10. A method of imparting to a substrate improved resistance to corrosion thereof by a corrosive chemical and gas-containing medium or by a corrosive chemical and gas-generating medium, which method comprises:

(1) applying to a porous backing material an elastomeric coating having a permeability of at least 10^{-4} ml/cm² hr. atm. at room temperature for oxygen and an uncured elastomer viscosity of 100–2000 poises, and

(2) adhesively securing said porous backing to said substrate;

said porous backing providing means for escape of gases permeating said coating, from between said coating and the supporting substrate, said means for escape of gases serving to prevent a build-up of gases between said coating and said substrate which would tend to dislodge the coating from the substrate, whereby the adhesion of said coating to said substrate is maintained.

4,298,417

METHOD OF MANUFACTURING A HELICOPTER ROTOR BLADE

August H. L. Euler, Aix-en-Provence, and Gilbert F. A. Beziac, Salon de Provence, both of France, assignors to Societe Nationale Industrielle Aerospatiale, France

Division of Ser. No. 879,915, Feb. 22, 1978, Pat. No. 4,213,739. This application Feb. 8, 1980, Ser. No. 119,912

Claims priority, application France, Feb. 28, 1977, 77 05767

Int. Cl.³ B32B *1/10*

U.S. Cl. 156—228 **1 Claim**

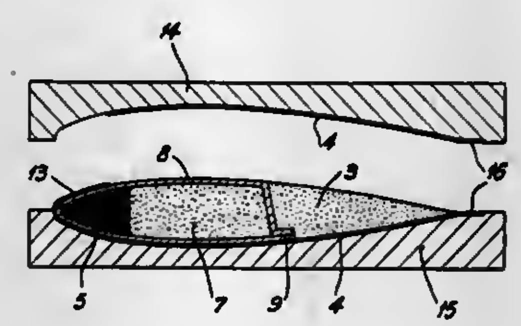

1. A process for manufacturing a rotor blade, especially for a helicopter, said process comprising the successive steps of impregnating certain components of the blade with polymerizable substances, placing said impregnated components in a single mould comprising two rigid partial moulds, one of which is a bottom partial mould and the other a top partial mould, the internal shape of each partial mould being adapted to the shape of the corresponding part of the blade with respect to variations of blade shape, thickness, chord and twist angle along a blade length, assembling said two partial moulds, and finally submitting the assembled mould to a thermal process for polymerizing the substances impregnating said blade components in the mould, and including the steps of

(a) placing seriatim in said bottom partial mould;

a lower-face part of a blade covering comprising also an upper-face part,

a lower-face part of a thick sheet of fabrics comprising also an upper-face part, and intended to subsequently form a torque-tube, said upper-face part being left unfolded outside of said bottom partial mould;

a substantially D-shaped bundle of strands of glass fibre filament having a rounded front face and a flat rear face and which is placed in the front part of said bottom partial mould and is intended to subsequently form a leading edge spar;

a core of a lightweight cellular substance, juxtaposed to the whole rear face of said D-shaped strand bundle;

(b) folding said upper-face part of said sheet of fabrics above said juxtaposed spar and core so as to wrap them up and preform a torque-tube;

(c) placing a cap on the front part of said preformed torque-tube intended to subsequently form the leading edge of the blade;

(d) placing a rear filling member in said bottom partial mould in juxtaposition to said folded sheet of fabrics;

(e) placing said upper-face part of said blade covering in said top partial mould;

(f) locking said top partial mould to said bottom partial mould; and

(g) placing the mould thus filled in an oven of about 120° C. to polymerize the impregnating substances of the blade components.

4,298,418

METHOD AND APPARATUS FOR THE MANUFACTURE OF A LOCKED MATERIAL OF FILAMENT

Sadaaki Takagi, 39, Mikage-cho, Okazaki-shi, Aichi-ken, Japan

Filed Dec. 26, 1979, Ser. No. 107,364

Claims priority, application Japan, Dec. 29, 1978, 53/163086

Int. Cl.³ D04H *1/48*

U.S. Cl. 156—296 **18 Claims**

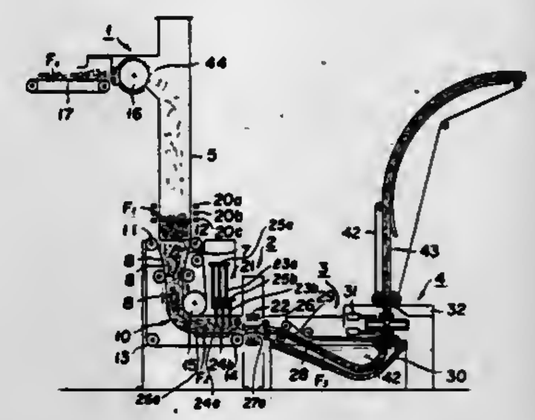

1. A method for the manufacture of a locked material of filaments, which comprises compression molding in a prescribed shape short fibers of three-dimensionally crimped synthetic filaments, applying an adhesive liquid to the shaped article of filaments thus obtained, then lifting the shaped article in a substantially vertical direction and, at the same time, subjecting it to dielectric heating and thereby drying the adhesive adhering to the shaped article.

4,298,419

DRY ETCHING APPARATUS

Keizo Suzuki; Sadayuki Okudaira; Shigeru Nishimatsu, all of Kokubunji, and Ichiro Kanomata, Fuchu, all of Japan, assignors to Hitachi, Ltd., Tokyo, Japan

Filed Jun. 26, 1980, Ser. No. 163,294

Claims priority, application Japan, Jul. 13, 1979, 54/88115

Int. Cl.³ C23F *1/02;* H01L *21/306;* C03C *15/00, 25/06*

U.S. Cl. 156—345 **4 Claims**

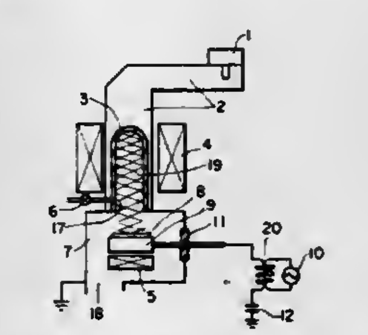

1. A dry etching apparatus comprising: a vacuum volume formed with a gas inlet for introducing discharge gases and with a discharge room; magnetic field generating means for generating a magnetic field in said discharge room; microwave generating means for generating a microwave electric field in said discharge room; sample holding means for holding a sample to be worked in said vacuum room such that it is isolated from the earth; and AC voltage impressing means for impressing such an AC voltage upon said sample which has a frequency ranging from 100 KHz to 10 MHz.

4,298,420

LOCKING DEVICE FOR CURING RIMS

Larry A. Severson, West Fargo, N. Dak., assignor to Branick Mfg., Inc., Fargo, N. Dak.

Filed Mar. 27, 1980, Ser. No. 134,426

Int. Cl.³ B29H *5/02*

U.S. Cl. 156—394 R **3 Claims**

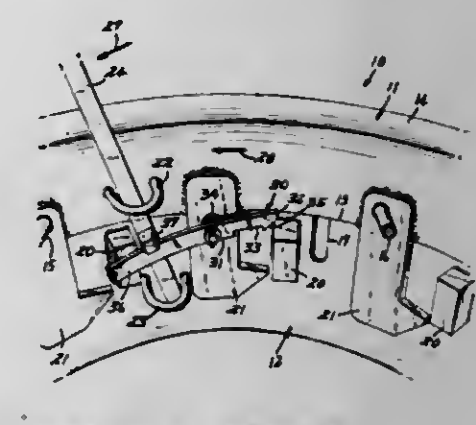

1. In a tire curing rim, in combination:

a rim assembly including first and second hollow cylindrical sleeves axially arranged for circumferential abutment along a contact circle and for relative rotation about the axis between a first, locking position and a second, release position;

means for preventing axial movement between said sleeves in said first locking position comprising a plurality of bosses projecting radially inward from said first sleeve adjacent said contact circle, and a plurality of hook members projecting axially beyond said contact circle inwardly of said second sleeve, for engagement with said bosses in said first position of said sleeves;

releasable latch means for preventing relative rotation of said sleeves out of said first position, said latch means comprising a latch hook pivotally mounted on said first sleeve for engagement with one of said bosses in said first position of said sleeves and resilient means for releasably urging said latch hook into engagement with said boss;

a pair of axially spaced rim loops projecting inwardly from said first and second sleeves respectively in substantially aligned circumferential relation when said sleeves are in said first position; and

a push bar received in said rim loops actuable to apply leverage between said sleeves about an axis generally orthogonal to the common axis of the sleeves causing said relative rotation of said sleeves, said push bar including means to disable said resilient means while applying said leverage.

4,298,421

DEVICE FOR APPLYING THE ELASTOMERIC FILLER TO THE BEAD CORE OF A TIRE

Dante Pirovano, Milan, Italy, assignor to Industrie Pirelli S.p.A., Milan, Italy

Filed Apr. 18, 1979, Ser. No. 31,299

Claims priority, application Italy, Apr. 19, 1978, 22448 A/78

Int. Cl.³ B29H *17/32*

U.S. Cl. 156—460 **21 Claims**

1. Device for applying an elastomeric filler on the bead core of a tire, consisting of two discs with a common axis of rotation, which can be moved away from each other or brought together respectively to receive the bead core before the application of the filler and to unload the bead core with the filler and to form an annular seat designed to accommodate the bead core, the said device being characterised by the fact that it includes means for automatically loading the bead core from a first position to a second position in which the bead core is between the two discs with its center aligned with the common

axis of rotation, the said means having two jaws and means for controlling the opening of the jaws, the said two jaws rotating in relation to each other round a first hinge arranged on a suitable support rotating around a second hinge in order to bring the jaws from the first of the said positions to the second and vice versa, the said two hinges having axis of rotation parallel to the common axis of rotation of the two discs, the profile of the jaws when closed having surfaces corresponding to circle arcs of the radial profile of the bead core, the said surfaces of the jaws being provided with means for connecting

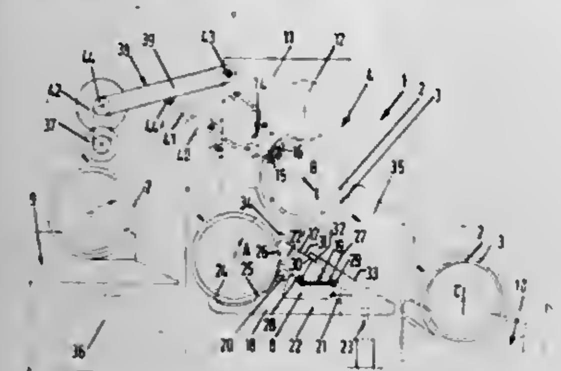

to the corresponding parts of the radially outermost periphery of the bead core, the said means for controlling the opening of the jaws being actuated when the bead core had already been locked in the annular seat between the two discs and the support is moved from the second of these positions to the first, and said means for controlling the opening of the jaws having an element for controlling the rotation of the first jaw, the path of which from the second of these positions to the first meets the external profile of the bead core, the said first jaw rotating around the first hinge and in relation to the second jaw kept stationary on the said support.

4,298,422
LABELLING MACHINE
Rudolf Zodrow, Dusseldorf, Fed. Rep. of Germany, assignor to Jagenberg-Werke AG, Dusseldorf, Fed. Rep. of Germany
Continuation of Ser. No. 81,899, Oct. 4, 1979, abandoned. This application May 5, 1980, Ser. No. 146,397
Claims priority, application Fed. Rep. of Germany, Oct. 6, 1978, 2843602; Jan. 18, 1979, 2901853; Sep. 1, 1979, 2935433
Int. Cl.³ B65C *9/16*
U.S. Cl. 156—568 **31 Claims**

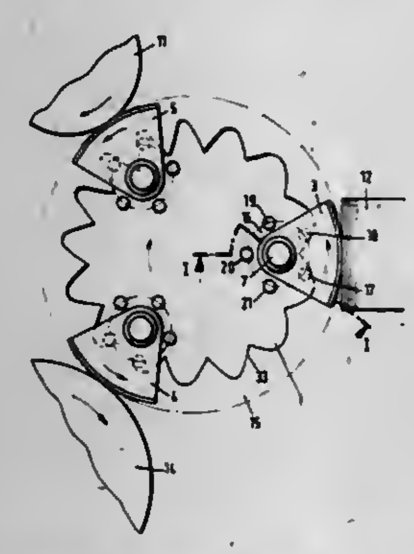

1. In a labelling machine having a frame, a track, and a sequence of stations along said track, said stations including an adhesive-application station, a label-storage station and a label transfer station;
a rotatable carrier disposed within said track;
at least one label selector component mounted on said carrier for rotating in an opposite direction from said carrier, said selector component having an outwardly curved surface for rolling on an adhesive-application roll at said adhesive-application station, for picking-up a label at said label-storage station and for applying the label to said label transfer station; and
a planetary drive for rotating said selector component on said carrier, said drive including an internally-toothed sun wheel fixed in said frame and defining a lantern gearing thereon, a drive shaft secured to said selector component and a planetary gear driving said shaft and having a plurality of lanterns carried thereon for meshing with said lantern gearing on said sun wheel, said lantern gearing having teeth at each said station with flanks sloped according to the required acceleration and deceleration of rotation of said selector component for a rolling movement at each said station.

4,298,423
METHOD OF PURIFYING SILICON
Joseph Lindmayer, Bethesda, Md., assignor to Semix Incorporated, Gaithersburg, Md.
Continuation-in-part of Ser. No. 751,343, Dec. 16, 1976, abandoned. This application Jan. 15, 1980, Ser. No. 112,213
Int. Cl.³ C01B *33/02*
U.S. Cl. 156—616 R **9 Claims**

1. A method of treating silicon having a percentage of impurities therein of at least 0.5%, thereby economically improving the purity thereof so that the resulting silicon will be of photovoltaic grade but less than semiconductor grade purity, comprising
(a) placing a charge of impure silicon having at least 0.5% impurities in a container that remains inert at a temperature at which silicon is in a freely molten state,
(b) heating said impure silicon in said container to a temperature at which all of said charge has melted and there is no liquid-solid interface between melted and unmelted silicon and impurities rise to the surface of the silicon, but not to a temperature at which the inert container will substantially react with the silicon,
(c) providing a non-oxidizing gaseous atmosphere at the surface of the molten silicon, said atmosphere being substantially free of water vapor and any other gas with which the silicon will react,
(d) causing a flow of said gaseous atmosphere over the surface of the molten silicon so that impurities at the surface of the molten silicon are carried away from said surface by said atmosphere, and
(e) thereafter cooling said silicon from its molten state to a temperature below its solidification point to form a solid silicon having a degree of purity greater than 99.5% but less than semiconductor grade silicon and suitable for use as a host material in photovoltaic cells.

4,298,424
METHOD FOR ETCHING POLYAMIDE SHAPED ARTICLES
Sachio Terada; Akito Suhara; Toshiro Shimada, all of Ube; Takashi Nakamura, Onoda; Kunizo Hujii, Ube, and Nobuichi Nakahira, Nagoya, all of Japan, assignors to UBE Industries, Ltd., Yamaguchi, Japan
Filed Jun. 19, 1980, Ser. No. 160,856
Int. Cl.³ B29C *17/08*
U.S. Cl. 156—668 **5 Claims**

1. A method for etching polyamide shaped articles, which comprises etching a shaped article, which is obtained by shaping a composition comprising 100 parts by weight of a polyamide and 10 to 50 parts by weight of an inorganic filler, with an aqueous solution of borofluoric acid.

4,298,425
METHOD AND APPARATUS FOR REFINING LIGNOCELLULOSE-CONTAINING MATERIAL TO PRODUCE FIBER PULP
Carl-Olov B. Ranzen, Bromma, and Knut O. Danielsson, Stockholm, both of Sweden, assignors to Defibrator Aktiebolag, Stockholm, Sweden
Filed Apr. 25, 1979, Ser. No. 33,119
Claims priority, application Sweden, May 3, 1978, 78051331
Int. Cl.³ D21D *1/30*
U.S. Cl. 162—18 **7 Claims**

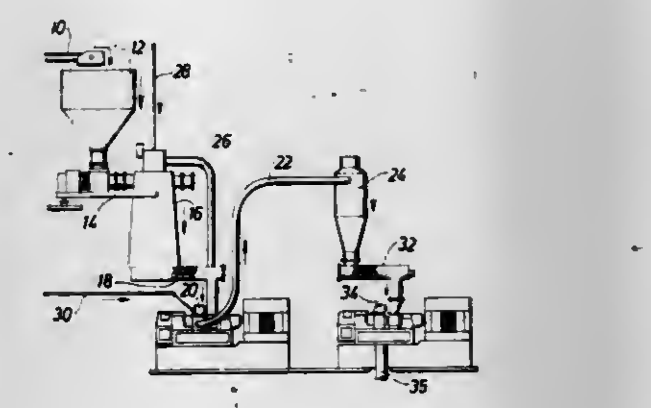

1. In the method of producing pulp from lignocellulosic fibrous material in which the material is first subjected to a grinding operation in a steam pressurized defibrating apparatus of the rotating disc type and the resultant mass of separated fibers is blown by the accompanying steam into a steam separator where the steam is separated from the fiber mass to form a cottony wadding-like fiber mass suspended in a gaseous atmosphere and passed to a refiner of the rotating-disc type via a screw conveyor means rotating within a housing, the improvement enhancing the freeness and wet strength characteristics of the pulp, comprising:
compacting said cottony wadding-like fiber mass during its passage through said housing by compressing it by said screw conveyor means to a ratio between 1:2 and 1:6 so as to permit steam generated between the discs of said refiner to escape through said conveyor means housing without interfering with the constant supply of fiber mass to the refiner and to permit the refining to be performed at a dry content of about 25-30%.

3. In an apparatus for producing pulp from lignocellulosic fibrous material in which the material is first ground in a steam pressurized defibrator and the resultant mass of separated fibers blown by the accompanying steam into a steam separator where the steam is separated from the mass of separated fibers in the form of a cottony wadding-like fiber mass suspended in a gaseous atmosphere and passed to a further refiner of the rotating-disc type via a screw conveyor means rotating within a housing, the improvement comprising:
a screw conveyor means provided with screw flights calibrated relative to the housing so as to compress the cottony wadding-like fiber mass at a ratio between 1:2 and 1:6 during its passage through the housing so as to permit steam generated between the discs of said refiner to escape into said conveyor means housing without interfering with the constant supply of fiber mass to the refiner and means to permit the refining to be performed at a dry content of about 25-30%.

4,298,426
METHOD AND APPARATUS FOR TREATING PULP WITH OXYGEN IN A MULTI-STAGE BLEACHING SEQUENCE
Louis O. Torregrossa, Puyallup; Jozef M. Bentvelzen, Sumner; Gerald D. Crosby, Seattle; Michael D. Meredith, Federal Way, all of Wash., and Henry Bepple, Kamloops, Canada, assignors to Weyerhaeuser Company, Tacoma, Wash.
Filed Jun. 15, 1979, Ser. No. 48,936
Int. Cl.³ D21C *9/12, 9/14, 9/16*; D21D *5/28*
U.S. Cl. 162—57 **79 Claims**

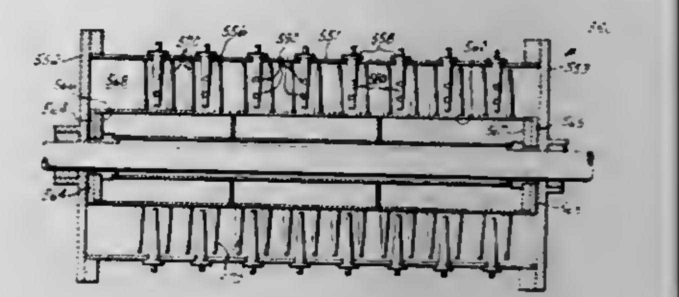

1. The process of bleaching pulp comprising
treating pulp at a consistency of 7 to 15% with oxygen at an alkaline pH and a temperature of around 65° C. to around 121° C.,
washing said oxygen treated pulp,
treating said washed pulp with a bleaching chemical selected from a group consisting of chlorine, chlorine dioxide, combinations of chlorine and chlorine dioxide, hypochlorites, peroxides and ozone,
washing said bleaching chemical treated pulp, and
treating said latter washed pulp at a consistency of 7 to 15% with oxygen at an alkaline pH and a temperature of around 65° C. to around 121° C.,
said oxygen in each of said oxygen treatments being mixed with said pulp in a mixing zone in which a plurality of rotating members pass through said pulp in a direction transverse the direction of travel of said pulp,
said members having a major axis extending in the direction of rotation,
said members providing a swept area through said pulp of 10,000 to 1,000,000 square meters per metric ton of oven dry pulp,
said members having leading and trailing edges, said leading edge having a radius of curvature in the range of 0.5 to 15 mm.

41. A pulping apparatus comprising
first means for adding a pH adjustment chemical to pulp,
second means after said first means for adding oxygen to said pulp,
third means for mixing said oxygen with said pulp,
fourth means after said third means for washing said oxygen treated pulp,
fifth means after said fourth means for adding a chemical selected from the group consisting of chlorine, chlorine dioxide, a combination of chlorine and chlorine dioxide, hypochlorite, peroxide and ozone to said pulp,
sixth means for mixing said latter chemical with said pulp,
seventh means after said sixth means for washing said pulp,
eighth means after said seventh means for adding a pH adjustment chemical to said pulp,
ninth means after said eighth means for adding oxygen to said pulp,
tenth means for mixing said oxygen with said pulp,
eleventh means for transporting said pulp from said first through tenth means,
each of said oxygen mixing means having a mixing zone,
a plurality or rotors in said mixing zone,
said rotors having leading and trailing edges, said leading edge having a radius of curvature in the range of 0.5 to 15 mm,

said rotors having a major axis extending in the direction of rotation,
said rotors being rotatable through said pulp in a direction transverse to the direction of travel of said pulp,
means for rotating said rotors, and
said rotors providing a swept area of 10,000 to 1,000,000 square meters per metric ton of oven dry pulp.

4,298,427

METHOD AND APPARATUS FOR INTIMATELY MIXING OXYGEN AND PULP WHILE USING AN ALKALI TO EXTRACT BLEACHING BY-PRODUCTS

Jozef M. Bentvelzen, Sumner; Michael D. Meredith, Federal Way; Louis O. Torregrossa, Puyallup, all of Wash., and Henry Bepple, Kamloops, Canada, assignors to Weyerhaeuser Company, Tacoma, Wash.

Filed Jun. 15, 1979, Ser. No. 48,947
Int. Cl.³ D21C *9/10, 5/28*
U.S. Cl. 162—57 **62 Claims**

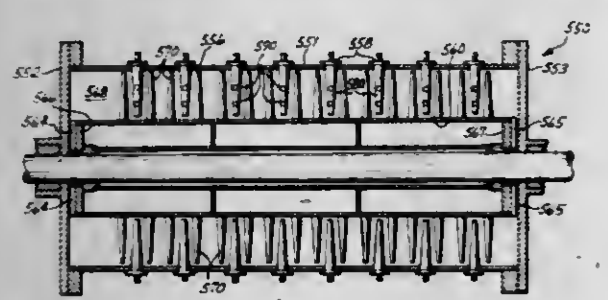

1. The process of creating intimate contact between oxygen and pulp having a consistency of 8 to 15%, and treating said pulp with said oxygen while using an alkali to extract bleaching by-products from pulp, comprising
transporting said pulp to a storage tank,
storing said pulp in said tank for a time of ½ to 4 hours, and after said storage, washing extraction by-products from said pulp,
before said storage step: adding alkali to said pulp, said alkali being added in an amount in the range of ½ to 7%, expressed as sodium hydroxide, based on the oven dry weight of said pulp, and heating said pulp;
between said heating and said storage steps,
adding oxygen to said pulp, and
intimately mixing said oxygen with said pulp, said mixing occurring in a mixing zone in which a plurality of rotating members pass through said pulp in a direction transverse the direction of travel of said pulp,
said members having a major axis extending in the direction of rotation,
said members providing a swept area through said pulp of 10,000 to 1,000,000 square meters per metric ton of oven dry pulp,
said members having leading and trailing edges, said leading edge having a radius of curvature in the range of 0.5 to 15 mm.
45. A pulp extraction stage comprising
means for adjusting the consistency of said pulp to 8 to 15%,
means for transporting said pulp from said consistency adjustment means to a storage tank,
said storage tank,
means, after said tank, for washing said pulp,
means, before said tank, for adding alkali to said pulp,
means, between said consistency adjustment means and said tank, for heating said pulp,
between said heating means and said storage tank,
means for adding oxygen to said pulp, and
means for mixing said oxygen with said pulp, said mixing means having a mixing zone,
a plurality or rotors in said mixing zone,
said rotors having leading and trailing edges, said leading edge having a radius of curvature in the range of 0.5 to 15 mm,
said rotors being rotatable through said pulp in a direction transverse to the direction of travel of said pulp,
said rotors having a major axis extending in the direction of rotation,
means for rotating said rotors, and
said rotors providing a swept area of from 10,000 to 1,000,000 square meters per metric ton of oven dry pulp.

4,298,428

USE OF ADDITIVES IN PULP BLEACHING PROCESSES TO PRESERVE PULP STRENGTH

Michael D. Breslin, and David R. Cosper, both of Downers Grove, Ill., assignors to Nalco Chemical Company, Oak Brook, Ill.

Filed Aug. 7, 1980, Ser. No. 176,230
Int. Cl.³ D21C *3/18*
U.S. Cl. 162—73 **6 Claims**

1. In a method for the alkaline bleaching of aqueous slurries of chemically produced cellulosic materials utilizing a hypochlorite bleaching agent selected from the group consisting of sodium hypochlorite and calcium hypochlorite, the improvement comprising maintaining in the alkaline aqueous slurry of the chemically produced cellulosic material during treatment with said bleaching agent from 0.01–0.5% by weight of an amine compound selected from the group consisting of: ethylamine, methoxypropylamine, monoethanolamine, n-butylamine, 3-aminopropanol, isopropylamine, ethylenediamine, aniline, 2 amino-2 methylpropanol, 2-aminopropanediol triethylenetetramine, 1,3-diaminopropane, diaminohydroxypropane, ethylenediamine, hexamethylenediamine, morpholine.

4,298,429

MEANS FOR EFFECTING CROSS DIRECTION FIBER ORIENTATION IN A PAPERMAKING MACHINE HEADBOX

Richard E. Hergert, Rockton, Ill., and Jan I. Bergstrom, Beloit, Wis., assignors to Beloit Corporation, Beloit, Wis.

Filed Sep. 17, 1979, Ser. No. 76,410
Int. Cl.³ D21F *1/02, 1/06*
U.S. Cl. 162—343 **11 Claims**

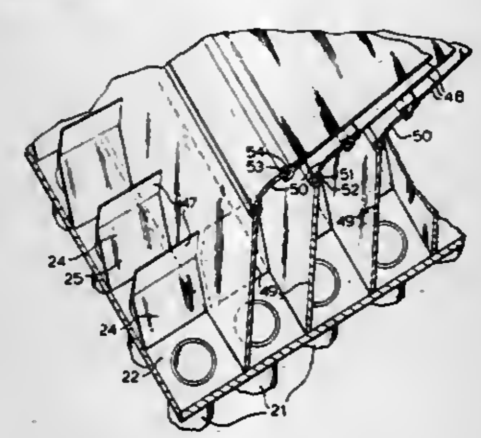

1. In a paper making machine headbox adapted for effecting cross machine direction fiber orientation in paper making stock flowing through the headbox, and including a slice chamber through which the stock flows in machine direction from a receiving end to a slice adapted to be associated with paper forming means, and stock delivering chamber means having an upsteam end adapted to communicate with a stock supply and a downstream end communicating with said receiving end of said slice chamber,
a set of spaced partitions which extend in oblique cross machine planes for defining passages dividing the paper making stock into a plurality of streams intermediate said upstream and downstream ends of said delivering chamber means for biasing the direction of flow of the flowing paper making stock in cross machine direction for orienting stock fibers in the cross machine direction;
and flanges at the downstream ends of said partitions extending in substantially the machine direction for diverting the paper making stock from the downstream ends of said passages into substantially the machine direction to said receiving end of said slice chamber while permitting at least a substantial proportion of the fibers to remain in the cross machine direction orientation, so that at least a substantial proportion of the fibers will remain in the cross machine orientation during stock flow in said chamber to said slice and the cross machine oriented fibers will provide cross direction tensile strength in paper formed from said stock.

4,298,430

APPARATUS FOR DETERMINING THE LOCAL POWER GENERATION RATE IN A NUCLEAR REACTOR FUEL ASSEMBLY

Erik Rolstad; Thor-Harrald Korpas, both of Halden, Norway; Robert H. Leyse, Rockville, and Robert D. Smith, Bethesda, both of Md., assignors to Scandpower A/S, Kjeller, Norway

Filed Mar. 21, 1978, Ser. No. 888,881
Claims priority, application France, Mar. 23, 1977, 77 08657
Int. Cl.² G21C *17/00*
U.S. Cl. 376—247 **15 Claims**

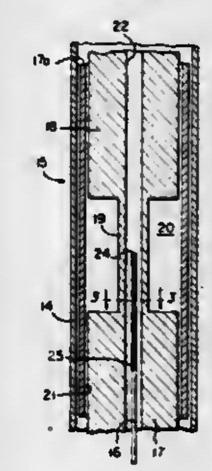

2. A device for measuring local power generation rate within a nuclear reactor fuel assembly comprising:
(a) a cylindrical rod having a plurality of regions of substantially constant diameter, said rod being formed of heat conducting and electrically conducting material, said material being heated by any ambient gamma ray flux;
(b) said cylindrical rod having a central bore;
(c) said bore containing a plurality of differential thermocouples having cold and hot junctions;
(d) said rod being provided, between said regions of substantially constant diameter, with a plurality of zones of reduced diameter;
(e) a hot junction of one differential thermocouple being operatively positioned in said central bore midway of said zone of reduced thickness;
(f) the corresponding cold junction of said differential thermocouple being operatively positioned in said central bore between two successive zones of reduced thickness and spaced from the junctions between said two successive zones and the intervening region of substantially constant diameter;
(g) said cylindrical rod being secured in a relatively closely fitting shielding tube having an inner wall whereby an annular heat insulating chamber is defined by said zone of reduced diameter and the inner portion of said inner wall;
(h) whereby, when said cylindrical rod is heated by a longitudinal electric current or by an ambient gamma ray flux, the heat developed therein is rejected to the ambience; and
(i) whereby the heat conduction within said rod, in a zone of reduced diameter, is substantially in the axial direction and the heat conduction within said rod, in that portion of one of said regions of substantially constant diameter within which a cold junction is situated, is substantially in the radial direction.

4,298,431

DEVICE FOR THE THERMAL PROTECTION OF AN INTERNAL STRUCTURE OF A LIQUID METAL COOLED FAST REACTOR

Yves Depierre, Valensole; Jacques A. Figuet, Aix en Provence, and Guy Lemercier, Le Puy Sainte Reparade, all of France, assignors to Commissariat a l'Energie Atomique, Paris, France

Filed Jun. 6, 1978, Ser. No. 913,110
Claims priority, application France, Jan. 13, 1977, 77 18031; May 12, 1978, 78 14195
Int. Cl.³ G21C *15/12, 13/02*
U.S. Cl. 176—290 **11 Claims**

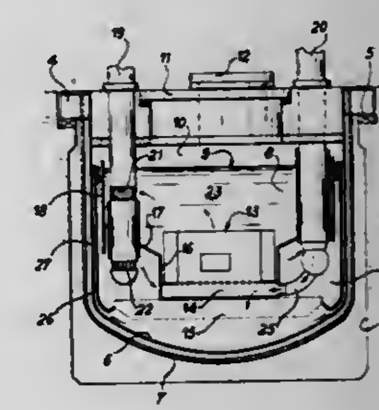

1. A thermal protection device for the thermal protection of a structure for a liquid-metal cooled nuclear reactor in which said structure comprises an outer vertical cylindrical wall and a coaxial cylindrical shell therein having at its upper end a free edge forming an overflow sill for said liquid metal, there being delimited between said wall and said shell a vertically-extending annular space through which is circulated in the upward direction a diverted flow of liquid metal withdrawn from a volume of said liquid metal in which a lower portion of said wall is immersed, wherein a surface of said cylindrical shell which is remote from said space has a packing of heat-insulating elements fixed on the entire periphery of said wall so that an over-flowing sheet of liquid metal which falls on the downstream side of said overflow sill passes through said packing before being returned into said volume of liquid metal, wherein the packing of heat-insulating elements is so disposed that a top face of the packing is located below the edges of the cylindrical shell which forms an overflow sill, said top face being covered by a distributor for distributing the flow of the liquid metal during overflow discharge, wherein a flow-distributing component is a perforated grid.

4,298,432

DEVICE FOR HOLDING GAS-COOLED FUEL ASSEMBLIES OF NUCLEAR REACTORS

Theodor Hensolt, Nuremberg, Fed. Rep. of Germany, assignor to Kraftwerk Union Aktiengesellschaft, Mulheim an der Ruhr, Fed. Rep. of Germany

Filed Mar. 17, 1980, Ser. No. 130,607
Claims priority, application Fed. Rep. of Germany, Mar. 19, 1979, 2910690
Int. Cl.³ G21C *3/12*
U.S. Cl. 376—365 **2 Claims**

1. Device for holding jacketed fuel assemblies of a gas-cooled nuclear reactor in a grid plate disposed beneath a reactor core and formed with cylindrical bores for receiving therein a respective fuel-assembly foot which serves simultaneously as a coolant inlet, comprising a tubular grid-plate insert member connected respectively to each of the bores for hydraulically holding down the respective fuel assemblies

against flow pressure of the coolant, said insert member being closed at the bottom thereof and having at least one lateral opening for passage of coolant to the respective fuel-assembly foot, piston rings peripherally disposed on the fuel-assembly foot above and below said lateral opening for sealing the foot with respect to the inner surface of said insert member, a plurality of wedge-like structural members uniformly distributed

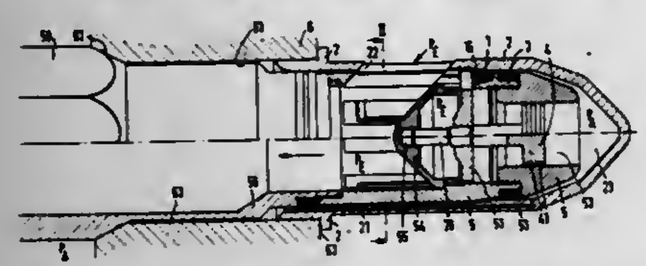

about the periphery of the fuel-assembly foot above the lower of said piston rings, and a piston central to said foot and actuatable by a pressure difference of the coolant between an inlet thereof to and an outlet thereof from the respective fuel element, together with a conical yet non-sealing seat of the fuel assembly formed on an upper side of the grid plate, for effecting play-free clamping of the fuel assembly.

4,298,433

MEANS FOR SUPPLYING FEED WATER TO A SUBSTANTIALLY CYLINDRICAL, VERTICAL REACTOR TANK

Bo Kinnander; Torstein Landa, and Ragnar Mansson, all of Vesteras, Sweden, assignors to AB Asea Atom, Sweden

Filed Mar. 21, 1979, Ser. No. 22,547

Claims priority, application Sweden, Mar. 21, 1978, 7803213

Int. Cl.³ G21C *15/00*

U.S. Cl. 376—286 **9 Claims**

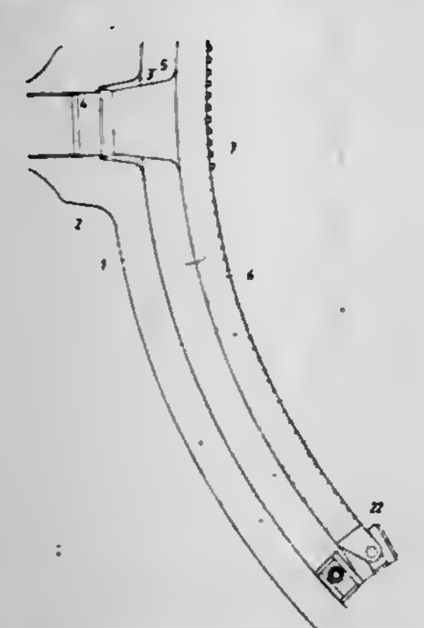

1. In a nuclear reactor having a substantially cylindrically-shaped and vertically extending pressure vessel and a feed-water distribution assembly for conveying and distributing feed-water within said pressure vessel, said pressure vessel having a vertically extending, substantially cylindrically-shaped wall having a feed-water nozzle extending therethrough, said feed-water nozzle having a cylindrical inner surface portion of a first diameter with an annular inner contact surface thereon of a second diameter greater than said first diameter, said feed-water distribution assembly

a hollow flow passageway assembly positioned within said pressure vessel and projecting into said feed-water nozzle extending through said cylindrically-shaped wall, said hollow flow passageway assembly including an outlet and an inlet, said flow passageway assembly inlet comprising a radially outwardly extending annular abutment portion having a diameter greater than the diameter of said inner surface portion of said feed-water nozzle, said inner surface portion being located upstream from said flow passageway assembly, whereby contact between said abutment portion and said contact surface provides a stop to limit insertion of said flow passageway assembly into said feed-water nozzle;

a curved, non-annular flow distributor assembly positioned within said pressure vessel and having an inlet attached to and in joint fluid-tight communication with said outlet of said flow passageway assembly, said flow distributor assembly further including a hollow passageway having a radially inner wall facing away from said flow passageway assembly and formed with a plurality of through apertures;

first and second bracket assemblies each fixedly attached to an inner surface of said cylindrically-shaped wall and circumferentially spaced from one another such that said first bracket assembly is positioned adjacent a first end portion of said curved flow distributor and said second bracket assembly is positioned adjacent a second end portion of said curved flow distributor;

each of said first and second bracket assemblies including a separate force transmitting member pivotally attached at one end portion to a respective bracket assembly with a resistance member adjustably mounted on an opposite end portion of said force transmitting member;

a separate attachment member surrounding each force transmitting member and each attachment member being pivotally attached to one of said first and second end portions of said flow distributor; and

separate spring means compressed between each attachment member and an adjacently disposed resistance member for automatically biasing said curved flow distributor towards said cylindrically-shaped wall, said resistance member having adjusting means associated therewith for initially compressing said spring means a predetermined amount with said predetermined amount being such that said attached flow passageway assembly projects into said feed-water nozzle and said abutment portion of said flow passageway assembly contacts said inner contact surface with a substantially constant pressure regardless of changes in fluid pressure generated by feed-water flowing through said feed-water distribution assembly.

4,298,434

BOTTOM MOUNTED FUEL HOLDDOWN MECHANISM

Andrew J. Anthony, Tariffville, Conn., and Malcolm D. Groves, Clearwater, Fla., assignors to Combustion Engineering, Inc., Windsor, Conn.

Filed Nov. 13, 1978, Ser. No. 959,971

Int. Cl.³ G21C *3/02*

U.S. Cl. 376—364 **9 Claims**

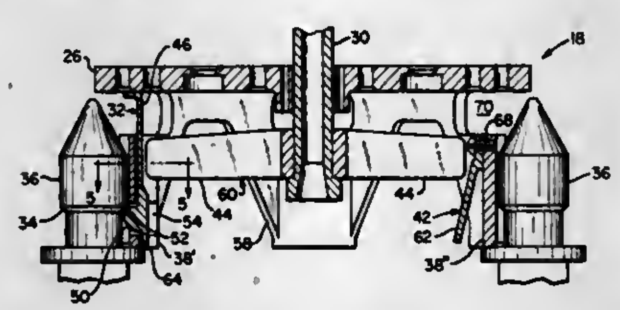

1. A nuclear fuel assembly to be located below a core upper alignment plate and on a core support stand, the stand having projections thereon forming mating surfaces, comprising: a lower end fitting having an upper portion with an opening therethrough and a lower portion facing the support stand and including post means for placement adjacent to the projections; actuating means extending from the upper end of the assembly through the opening in the lower end fitting, and being movable relative thereto; and locking means carried by the lower end fitting adjacent to the post means and having a latch adapted to mate with the mating surface on the projections, the locking means being actuated by the movement of the actuating means, whereby the assembly may be selectively locked to the core support stand.

4,298,435

LIQUID SMOKE AND ITS PRODUCTION

Charles D. Ledford, Crossville, Tenn., assignor to The Baltimore Spice Company, Baltimore, Md.

Filed May 8, 1980, Ser. No. 147,989

Int. Cl.³ A23B *4/04*

U.S. Cl. 201—8 **9 Claims**

1. In a process for producing liquid smoke from hardwoods wherein the wood is pyrolyzed, and the smoke product is absorbed in an aqueous solution, the improvements which comprise:

separating all pieces coarser than ½ inch from a sawmill sawdust and recovering the wood fines from said separating step;

drying the wood fines to a moisture content below about 5% moisture by heating the same to a temperature no higher than 225° F.

calcining the dried wood below a temperature of 925° F. in the absence of any added air;

fractionating the wood smoke produced by said calcination by absorbing some of the smoke in an aqueous liquid and collecting the same and separately recovering the remainder of the smoke which is not absorbed in said liquid.

4,298,436

METHOD OF FORMING INSULATED CONDUCTORS IN A CONDUCTIVE MEDIUM AND ARTICLE THUS FORMED

Lowell E. Thomas, Tewksbury, Mass., assignor to Dynamics Research Corporation, Wilmington, Mass.

Filed Jun. 11, 1980, Ser. No. 158,606

Int. Cl.³ C25D *5/02, 5/10, 5/54*

U.S. Cl. 204—15 **18 Claims**

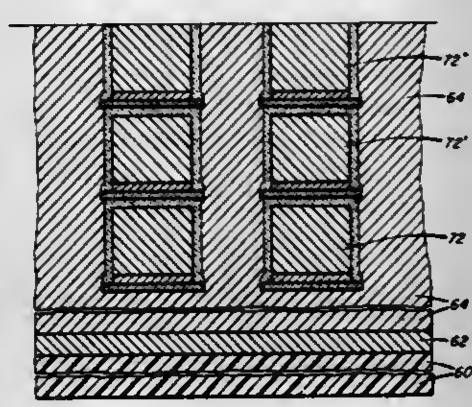

1. A method for providing insulated conductive elements in a body of conductive material comprising the steps of:

providing a conductive substrate with oversized pads of dielectric material at positions over which the conductive elements are to be formed;

forming the conductive elements on the oversized pads, such that portions of the pads extend outwardly from the bottoms of the conductive elements;

coating the tops and sides of the conductive elements with dielectric material such that the dielectric material is sealed to the portions of the oversized pads extending from the bottoms of the conductive elements; and,

building up the substrate so as to at least surround the sides of said conductive elements.

4,298,437

METHOD FOR PRODUCING MAGNESIUM METAL FROM MOLTEN SALT

Robert A. Hard, Laguna Beach, Calif., assignor to Occidental Research Corporation, Irvine, Calif.

Filed Jan. 25, 1980, Ser. No. 115,597

Int. Cl.³ C25C *3/04*

U.S. Cl. 204—70 **18 Claims**

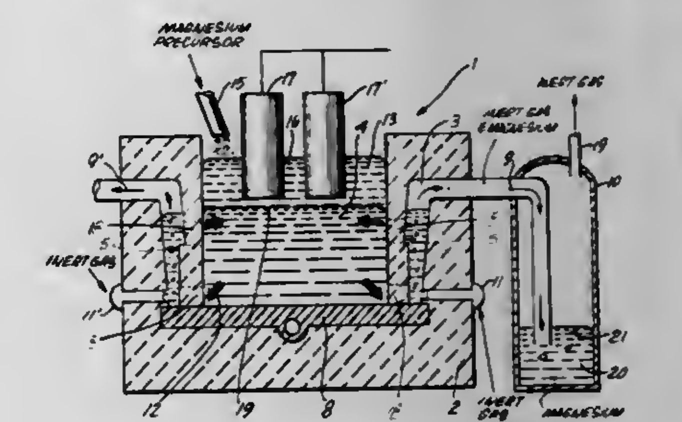

1. A method for producing magnesium metal which comprises the steps of:

(a) providing a molten magnesium metal precursor,

(b) providing molten silicon alloy beneath the molten magnesium metal precursor in contact therewith, the density of the molten magnesium metal precursor being less than that of the molten alloy,

(c) applying an electric potential to the molten silicon alloy whereby it is cathodically energized,

(d) contacting the molten magnesium metal precursor with an anodically energized electrode,

(e) causing an electric current to flow between the anodically energized electrode and the cathodically energized molten silicon alloy sufficient to reduce said magnesium metal precursor whereby magnesium metal is liberated and deposited on the molten silicon alloy and dissolved therein, and

(f) vaporizing said dissolved magnesium metal by passing an inert gas through said molten silicon alloy containing magnesium metal dissolved therein at a temperature and rate whereby a substantially pure magnesium metal vapor is removed from said molten silicon alloy.

4,298,438

PREPARATION OF 4-TERT.-BUTYLBENZALDEHYDE

Dieter Degner, Dannstadt-Schauernheim; Hardo Siegel, Speyer, and Heinz Hannebaum, Ludwigshafen, all of Fed. Rep. of Germany, assignors to BASF Aktiengesellschaft, Rheinland-Pfalz, Fed. Rep. of Germany

Filed Nov. 3, 1980, Ser. No. 203,597

Claims priority, application Fed. Rep. of Germany, Dec. 1, 1979, 2948455

Int. Cl.³ C25B *3/02*

U.S. Cl. 204—78 **4 Claims**

1. A process for the preparation of 4-tert.-butylbenzaldehyde by electrochemical oxidation of 4-tert.-butyltoluene in the presence of an inorganic acid, wherein the oxidation is carried out in the presence of an alkylsulfonic, alkenylsulfonic or arylsulfonic acid.

4,298,439
PRODUCING LONG LIFE DISPROPORTIONATION PRODUCTS FROM A PHOTO REDOX AGENT USEFUL AS A REDUCING MEDIUM FOR WATER, AND THE LIKE
Harry D. Gafney, Woodbury, N.Y., assignor to Research Foundation of the City University of New York, New York, N.Y.
Filed Aug. 11, 1980, Ser. No. 176,786
Int. Cl.³ B01J *19/12;* **C01B** *3/08*
U.S. Cl. 204—157.1 W **24 Claims**

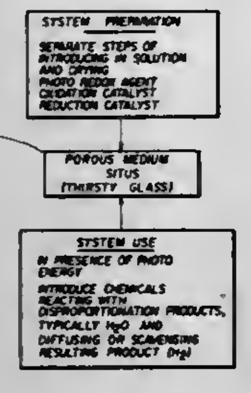

1. The method of disproportionately increasing the lifetime of photoinduced disproportionation products of a photo redox agent comprising the steps of,
introducing the photo redox agent into the pores of a transparent porous sorbent medium presenting an array of internal cavities, and
producing long life disporportionation products by transmission of photo energy into said medium to react with the photo redox agent situate in the pores of said medium.

4,298,440
METHOD AND APPARATUS FOR THE CORONA DISCHARGE TREATMENT OF WEBS, AND WEBS TREATED THEREWITH
John L. L. Hood, Taunton, England, assignor to British Cellophane Limited, Bridgwater, England
Filed Jan. 25, 1980, Ser. No. 115,395
Claims priority, application United Kingdom, Feb. 5, 1979, 3885/79
Int. Cl.³ H01T *19/00*
U.S. Cl. 204—165 **16 Claims**

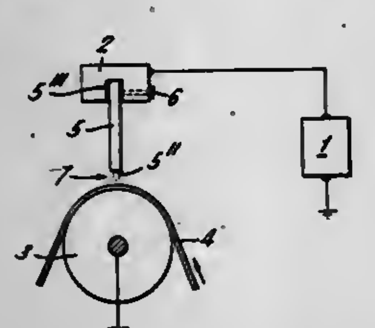

1. Apparatus for the corona discharge treatment of a travelling web comprising means defining a gap wherein a corona discharge may be formed, and through which the travelling web may be drawn, a pair of spaced electrical conductors for supplying power for the discharge to the said gap defining means, and a power source for supplying an alternating electrical voltage across the conductors, the means defining the gap including an electrode member mounted in electrical contact to at least one of the conductors, the electrode member being formed from a dielectric material having a dielectric constant of from 80 to 750, and the conductors being sufficiently spaced apart to preclude an arc discharge therebetween.

4,298,441
METHOD OF PRESERVING THE ELECTROPHORETIC PROPERTIES OF LIPOPROTEINS
Dietrich Seidel, Heidelberg; Heinrich Wieland, Waake, both of Fed. Rep. of Germany, and Ewald Molinari, Mödling, Austria, assignors to Immuno Aktiengesellschaft für chemisch-medizinische Produkte, Vienna, Austria
Filed Jun. 16, 1980, Ser. No. 159,672
Claims priority, application Austria, Jun. 27, 1979, 4484/79
Int. Cl.³ G01N *27/26*
U.S. Cl. 204—180 G **6 Claims**

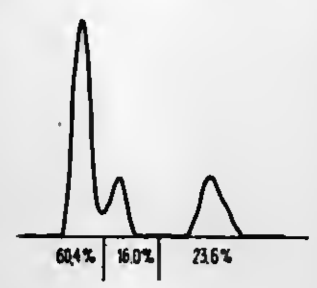

1. A method of preserving the electrophoretic properties of lipoproteins, in particular of LDL, VLDL and HDL lipoproteins, in human or animal plasma, plasma fractions or sera, in which the lipoprotein pattern is to be electrophoretically determined, which method comprises
adding non-reducing sugars to the plasma, plasma fractions or sera so as to obtain a mixture,
lyophilizing said mixture so as to obtain a lyophilizate, and reconstituting said lyophilizate prior to determination.

4,298,442
ELECTRODIALYSIS PROCESS FOR SILICA REMOVAL
Anthony J. Giuffrida, North Andover, Mass., assignor to Ionics, Incorporated, Watertown, Mass.
Filed Aug. 4, 1980, Ser. No. 175,098
Int. Cl.³ B01D *13/02*
U.S. Cl. 204—180 P **7 Claims**

1. An electrodialysis process for the removal of silica from aqueous solutions in an electrodialysis cell having a cathode chamber at one terminal end, an anode chamber at the opposite terminal end, said chambers containing a cathode and anode respectively the body of the cell as defined by the terminating electrodes comprised of a plurality of alternating silica diluting and silica concentrating-chambers defined by alternating cation and anion permeable membranes, passing said silica containing aqueous solution as a feed solution into said diluting chambers, passing a second feed solution into the concentrating and electrode chambers, passing a direct current across the terminal electrodes and withdrawing separate streams of deionized liquid and ion-enriched liquid from said cell; the improvement comprising adjusting the pH of the silica containing aqueous feed solution to a pH of at least above 9.5 prior to electrodialysis.

4,298,443
HIGH CAPACITY ETCHING APPARATUS AND METHOD
Dan Maydan, Short Hills, N.J., assignor to Bell Telephone Laboratories, Incorporated, Murray Hill, N.J.
Continuation-in-part of Ser. No. 65,138, Aug. 9, 1979, abandoned. This application Dec. 20, 1979, Ser. No. 105,620
Int. Cl.³ C23C *15/00*
U.S. Cl. 204—192 E **15 Claims**

1. In combination in an etching apparatus,
a conductive cylindrical chamber adapted to be connected to a point of reference potential,
a single multi-faceted cathode wafer holder centrally positioned within said chamber,

means for capacitively coupling said cathode wafer holder to a source of a-c power,
and means for establishing a gaseous atmosphere within said chamber at a specified pressure so that in response to a-c excitation of said apparatus a dark space is formed in the immediate vicinity of said holder and a plasma is formed between said dark space and the inner wall of said chamber.

11. A dry etching process for delineating fine-line patterns in multiple workpieces simultaneously by sputter etching or reactive sputter etching in a conductive cylindrical anode chamber adapted to be connected to a point of reference potential, said process comprising the steps of

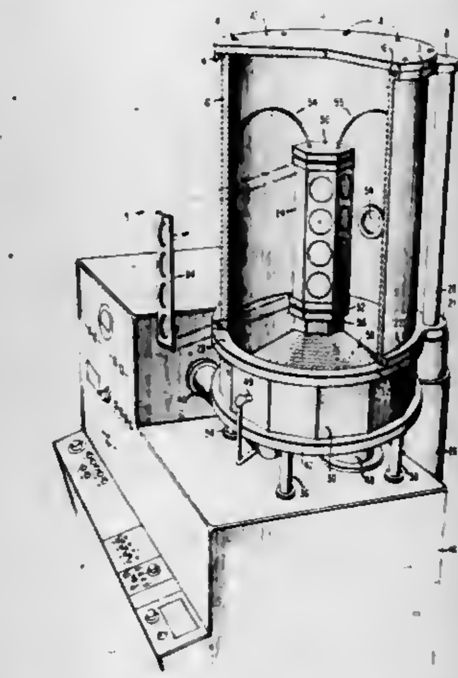

mounting the workpieces on a single longitudinally extending cathode holder centrally positioned within said chamber,
establishing a predetermined gaseous atmosphere at a specified pressure within said chamber in the space between the holder and the inner wall of said chamber,
and capacitively coupling a-c power to said cathode holder to form a dark space in the immediate vicinity of said holder and to form a plasma between said dark space and the inner wall of said chamber to cause etching of said workpieces to occur.

4,298,444
METHOD FOR MULTILAYER THIN FILM DEPOSITION
Day Chahroudi, Berkeley, Calif., assignor to Heat Mirror Associates, Palo Alto, Calif.
Division of Ser. No. 950,356, Oct. 11, 1978, Pat. No. 4,204,942. This application Dec. 26, 1979, Ser. No. 106,595
The portion of the term of this patent subsequent to May 27, 1997, has been disclaimed.
Int. Cl.³ C23C *15/00*
U.S. Cl. 204—192 R **4 Claims**

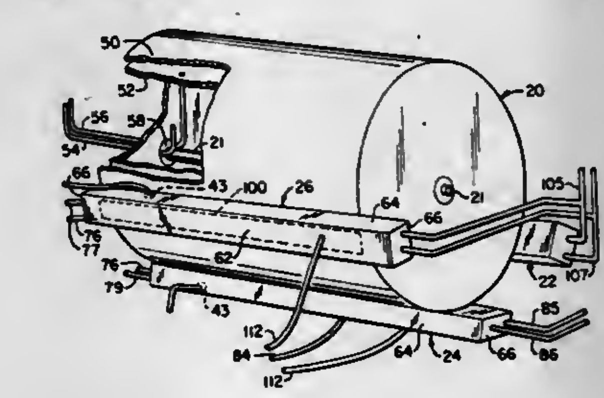

1. A method for depositing thin films of at least a first and a second material onto an elongate substrate, said method comprising the steps of:
providing a vacuum chamber containing at least a first and a second means for depositing the first and second material;
separately housing the respective deposition means in enclosures each having terminal portions forming an edge that defines an opening;
transporting the substrate to and from the first and second deposition means;
supporting the substrate proximate the respective openings in confronting relationship thereto to form a generally uniform interstitial gap between each said edge of each said enclosure and said supporting means;
establishing an electric field between the respective deposition means and the supporting means;
sputtering the materials from the respective deposition means onto the supported substrate to deposit thin films of said materials on said substrate; and
introducing and maintaining gasses into the respective enclosures at pressures greater than the internal pressure of the chamber, the substrate being supported so that the interstital gap restricts the outflow of said gasses from the respective enclosures.

4,298,445
ANODE FOR CATHODIC PROTECTION SYSTEM
Michael A. Warne, Brewood, England, assignor to Marston Excelsior Limited, Wolverhampton, England
Filed May 5, 1978, Ser. No. 903,036
Claims priority, application United Kingdom, May 9, 1977, 19384/77
Int. Cl.³ C23F *13/00*
U.S. Cl. 204—196 **9 Claims**

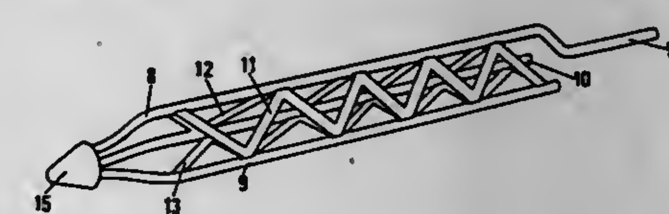

1. An impressed current anode assembly for use in cathodic protection of underwater structures, said assembly comprising an elongate structure of at least three metallic rods secured in spaced, substantially parallel relationship by a plurality of rigid ties positioned at intervals along the length of the rods, the rods being so disposed that there are at least three planes each including the longitudinal axes of at least two rods, said rods being formed of a film forming metal selected from the group consisting of titanium, zirconium, niobium, hafnium, tantalum and film forming alloys and at least one of the rods having an anodically active material on its surface, said anodically active material being selected from the group consisting of platinum group metals and alloys and anodically active compounds thereof, the assembly being in use anodically connected at one end to a source of direct electric current, and the assembly being arranged to be supported in use at the said one end only.

4,298,446
APPARATUS FOR PLATING
Masato Ando, Yokohama; Kenji Yamamoto, Komae, and Kazuhiro Taniguchi, Hiratsuka, all of Japan, assignors to Electroplating Engineers of Japan, Limited, Tokyo, Japan
Filed Apr. 18, 1980, Ser. No. 141,712
Claims priority, application Japan, Dec. 29, 1979, 54-172185
Int. Cl.³ C25D *17/02, 17/08*
U.S. Cl. 204—224 R **11 Claims**

1. An electroplating apparatus, comprising:
a plating tank having a first mask on the upper side thereof for engaging the lower surface of the object or objects to be plated, said first mask having opening means there-

through with said opening means having a configuration corresponding to the plating deposit to be made on the object or objects to be plated, nozzle means for jetting the plating liquid through said opening means and against said lower surface of the object or objects to be plated, said nozzle means being adapted to be connected as the anode of an electroplating circuit, said plating tank having positioning means on the upper side thereof;

a pair of elongated rails supported above said plating tank;

a support carriage, said support carriage comprising a carrier base supported on said rails for movement therealong and a rack base suspended from and supported on said carrier base for upward and downward movement with respect to said carriage base in directions away from and toward said plating tank, said rack base having holding means for holding the object or objects to be plated;

pressure means disposed above said rack base for moving said rack base downwardly and upwardly toward and away from said plating tank, said pressure means compris-

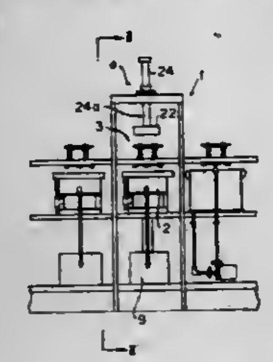

ing a pressure member having a second mask on its bottom, said second mask being adapted to contact the upper surface of the object or objects to be plated which are held in said holding means, a fluid pressure operated piston and cylinder assembly disposed above said pressure member and having a rod connected to said pressure member for moving same upwardly and downwardly, said pressure means also including a case surrounding said pressure member and connected thereto for limited relative vertical movement with respect thereto, said case having means engageable with said positioning means on said plating tank when said pressure means is in its lowermost position for positioning the said holding means and thereby the object or objects to be plated in proper position with respect to said first mask and said opening means therein, said pressure means having at least one lead wire extending along the lower surface of said second mask for contacting the upper surface of the object or objects to be plated, said lead wire being adapted to be connected as the cathode of said electroplating circuit.

4,298,447

CATHODE AND CELL FOR LOWERING HYDROGEN OVERVOLTAGE IN A CHLOR-AKALI CELL

Terry M. Copeland, Wilmington, Del., assignor to E. I. Du Pont de Nemours and Company, Wilmington, Del.

Filed Mar. 7, 1980, Ser. No. 128,111

Int. Cl.³ C25B *11/04*

U.S. Cl. 204—252 **11 Claims**

1. A cathode for use in electrolysis of an alkali metal halide comprising an electrically conductive cathode substrate and deposited particles consisting essentially of crystals of alpha-iron adherent to the surface of said cathode substrate.

4,298,448

ELECTROPHORETIC DISPLAY

Klaus Müller, Baden, and Andreas Zimmermann, Emmenbrücke, both of Switzerland, assignors to BBC Brown, Boveri & Company, Limited, Baden, Switzerland

Filed Jan. 24, 1980, Ser. No. 115,016

Claims priority, application Switzerland, Feb. 2, 1979, 1034/79

Int. Cl.³ C25D *1/12;* B03C *5/00*

U.S. Cl. 204—299 R **18 Claims**

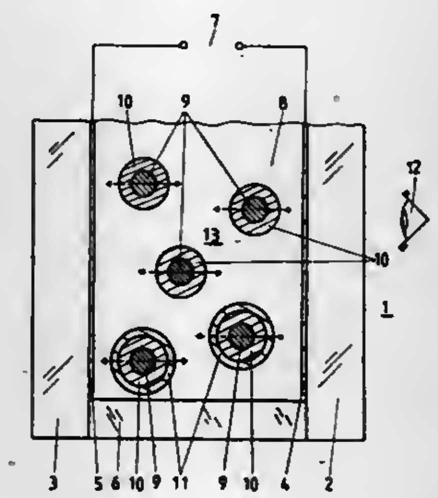

1. An electrophoretic display comprising:

a cell having two opposed plates spaced relative to each other and at least regionally provided with electrodes of which at least the plate facing an observer and its electrode are transparent,

said cell containing a suspension consisting of an inert continuous dielectric liquid phase and a dispersed solid phase constituted at least in part by optically discriminable electrophoretic particles, said individual electrophoretic particles all having practically the same density as the liquid phase, and at least part of the electrophoretic particles constituted by pigment particles coated with a sheath of organic material solidified at the cell operating temperature but melting at higher temperatures,

wherein the sheath matrial contains at least one charge control agent so as to impart a well-defined and practically uniform surface charge as well as a well-defined and practically uniform surface potential to the electrophoretic particles.

4,298,449

SAMPLE TRAY FEEDING APPARATUS

Hideaki Ida, Musashimurayama, and Ryo Fujimori, Hachiouji, both of Japan, assignors to Olympus Optical Co., Ltd., Tokyo, Japan

Filed Oct. 22, 1980, Ser. No. 199,638

Claims priority, application Japan, Oct. 26, 1979, 54-137739

Int. Cl.³ G01N *27/28*

U.S. Cl. 204—299 R **5 Claims**

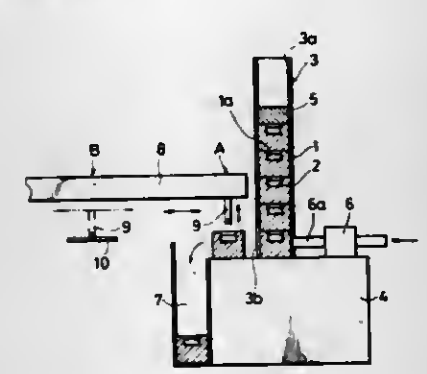

1. A sample tray feeding apparatus comprising sample trays each having plural number of cavities to be filled with samples, a sample tray accommodating container used for accommodating said sample trays in piled up condition and having at the lower end thereof a front opening and a rear opening each being of a size permitting to pass a single sample tray therethrough at a time, a sample tray protective cover to be mounted on the uppermost sample tray, a plural number of sample tray covers arranged movably in the vertical direction in a row at the back of the rear opening of said sample tray accommodating container and a shifting mechanism for displacing the lowermost sample tray, said sample tray feeding apparatus being adapted in such a manner that said shifting mechanism functions to displace the lowermost sample tray to a sample adhering position through the front opening of said sample tray accommodating container and then to the position under said sample tray cover through said rear opening after the sample application.

4,298,450

ALCOHOLS AS HYDROGEN-DONOR SOLVENTS FOR TREATMENT OF COAL

David S. Ross, Palo Alto, and James E. Blessing, Menlo Park, both of Calif., assignors to The United States of America as represented by the United States Department of Energy, Washington, D.C.

Filed Dec. 5, 1977, Ser. No. 857,717

Int. Cl.³ C10G *1/00, 1/06*

U.S. Cl. 208—8 LE **8 Claims**

1. In a method for the hydroconversion of coal by solvent treatment with a hydrogen-donor solvent under conditions to promote hydroconversion of the coal by hydrogen transfer activity, the improvement comprising utilizing as the hydrogen-donor solvent an alcohol having an α-hydrogen atom, and carrying out the solvent treatment step in the presence of a base capable of providing a catalytically effective amount of the corresponding alcoholate anion under the hydroconversion conditions.

4,298,451

TWO STAGE LIQUEFACTION OF COAL

Martin B. Neuworth, Chevy Chase, Md., assignor to The United States of America as represented by the United States Department of Energy, Washington, D.C.

Filed Feb. 25, 1980, Ser. No. 124,057

Int. Cl.³ C10G *1/00, 1/06;* B01J *1/00*

U.S. Cl. 208—8 LE **12 Claims**

1. A two stage process for converting solid, hydrogen-deficient, ash containing, hydrocarbonaceous material into liquid hydrocarbons which comprises

a. solvent extracting a solid, hydrogen deficient, ash containing hydrocarbonaceous material in the presence of hydrogen to produce a liquid extract product, said extraction being performed at a temperature in the range of about 600°–850° F., a coal feed throughput rate of 150–250 lbs/hr/ft³ and under hydrogen pressure in the range of about 1000 to 2000 psi;

b. solvent deashing to produce a clean extract; and

c. hydrocracking said clean extract in a catalytic ebullating bed hydrocracker to produce liquid hydrocarbons, said hydrocracking being performed at a temperature in the range of about 750°–825° F. and under hydrogen pressure in the range of about 2000–3000 psi.

4,298,452

COAL LIQUEFACTION

Tansukhlal G. Dorawala, and Edwin R. Kerr, both of Wappingers Falls, N.Y., assignors to Texaco Inc., White Plains, N.Y.

Filed Mar. 28, 1980, Ser. No. 135,047

Int. Cl.³ C10G *1/00*

U.S. Cl. 208—8 LE **10 Claims**

1. A process for the liquefaction of a solid fuel which consists essentially of contacting a solid fuel in finely divided form in the presence of a solvent therefor with water and a material which can decompose to hydrogen and carbon monoxide at a temperature between about 700° and 900° F. and a pressure between about 0 and 400 psig for a period of time between about 1 minute and 120 minutes.

4,298,453

COAL CONVERSION

Hans-Juergen Schoennagel, Lawrenceville, and John C. Zahner, Princeton, both of N.J., assignors to Mobil Oil Corporation, New York, N.Y.

Filed Dec. 27, 1977, Ser. No. 864,402

Int. Cl.³ C10G *1/08, 1/00;* C10L *1/00;* C10J *3/16*

U.S. Cl. 208—10 **25 Claims**

1. An improved coal conversion process comprising:

(a) combining finely divided particulate coal particles preheated to a temperature within the range of from about 100° to 600° F., finely divided solid cracking catalyst particles heated to a temperature within the range of from about 1300° to 1800° F.—the ratio of catalyst to coal being within the range from about 0.5:1 to 5:1, and a suspension-forming gaseous material whereby the coal particles are rapidly heated to a temperature within the range of from about 750° to 1650° F.;

(b) passing the suspension thus formed through a reactor arrangement providing a coal particle residence time within the range of from about 2 to 30 seconds;

(c) separating and recovering volatile products and gases from the solids following traverse of said reactor arrangement.

4,298,454

HYDROCONVERSION OF AN OIL-COAL MIXTURE

Clyde L. Aldridge, and Roby Bearden, Jr., both of Baton Rouge, La., assignors to Exxon Research and Engineering Company, Florham Park, N.J.

Continuation-in-part of Ser. No. 702,271, Jul. 2, 1976, abandoned. This application Oct. 11, 1979, Ser. No. 83,671

Int. Cl.³ C10G *1/06*

U.S. Cl. 208—10 **23 Claims**

1. A process for simultaneously hydroconverting a non-hydrogen donor heavy hydrocarbon oil and coal in admixture, which comprises:

(a) forming a mixture of said heavy hydrocarbon oil, coal and an added thermally decomposable metal compound, in an amount ranging from about 10 to about 950 weight parts per million, calculated as the elemental metal, based on said oil-coal mixture, said metal being selected from the group consisting of Groups IVB, VB, VIB, VIIB and VIII of the Periodic Table of Elements and mixtures thereof;

(b) converting said thermally decomposable metal compound to a catalyst within said mixture in the presence of a hydrogen-containing gas by heating said mixture to an elevated temperature;

(c) reacting the resulting mixture containing said catalyst with hydrogen under oil and coal hydroconversion conditions, such that at least 50 weight percent of said heavy oil has a boiling point below the initial boiling point of said heavy oil, in a hydroconversion zone, said catalyst being the sole catalyst in said hydroconversion zone, and

(d) recovering a hydroconverted normally liquid hydrocarbon product.

4,298,455

VISCOSITY REDUCTION PROCESS

Wann-Sheng Huang, Houston, Tex., assignor to Texaco Inc., White Plains, N.Y.

Filed Dec. 31, 1979, Ser. No. 108,751

Int. Cl.³ C10G *9/16, 9/00*

U.S. Cl. 208—48 AA **6 Claims**

1. A process for reducing the viscosity of a heavy hydrocarbon oil having an API gravity of less than about 15° while

inhibiting polymer formation which comprises subjecting said oil to a visbreaking treatment in the presence of a halogenated hydrocarbon free radical initiator present in an amount between 0.001 and 1.0% by weight and also in the presence of a chain transfer agent present in an amount between 0.1 and 5.0% by weight of the oil.

4,298,456
OIL PURIFICATION BY DEASPHALTING AND MAGNETO-FILTRATION
Daniel M. Coombs, and Dwight D. Boesiger, both of Bartlesville, Okla., assignors to Phillips Petroleum Company, Bartlesville, Okla.
Filed Jul. 22, 1980, Ser. No. 171,202
Int. Cl.^{3} C10G *32/02*
U.S. Cl. 208—86 **16 Claims**

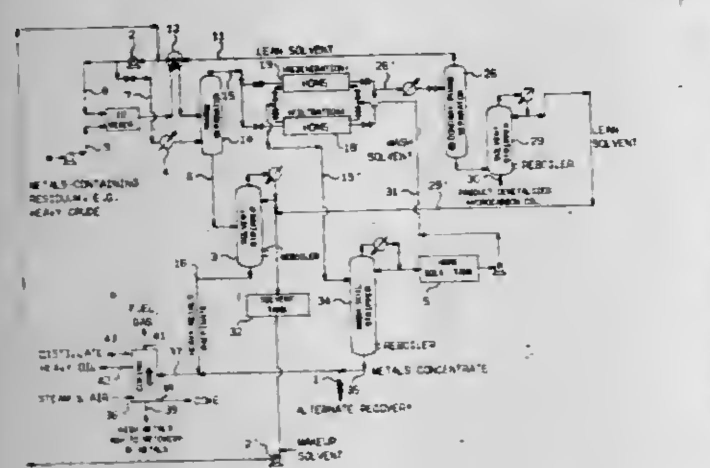

1. A process for demetallizing a heavy oil stream containing metals in the magnetizable form of paramagnetic molecules, paramagnetic particles or ferromagnetic particles or in the form of molecules/particles convertible to such a magnetizable form, comprising
(a) contacting the heavy oil stream with a light solvent stream to obtain an extraction mixture,
(b) separating said extraction mixture into an extract stream comprising solvent, extracted hydrocarbons and metals in the magnetizable form and into a residue stream having a high content of metals in the magnetizable form,
(c) subjecting said extract stream to a magneto-filtering step removing a significant amount of the metals in the magnetizable form from said extract stream and yielding a demetallized extract stream.

4,298,457
HYDROPYROLYSIS PROCESS FOR UPGRADING HEAVY OILS AND SOLIDS INTO LIGHT LIQUID PRODUCTS
Alex G. Oblad; Joseph Shabtai, and Rasmasamy Ramakrishnan, all of Salt Lake City, Utah, assignors to University of Utah, Salt Lake City, Utah
Continuation of Ser. No. 941,840, Sep. 11, 1978, abandoned. This application Apr. 3, 1980, Ser. No. 137,083
Int. Cl.^{3} C10G *47/22*
U.S. Cl. 208—107 **6 Claims**

1. A flow process for upgrading higher molecular weight, hydrocarbonaceous feedstocks into lower molecular weight, liquid, hydrocarbonaceous products in the absence of a highly turbulent flow comprising:
obtaining a higher molecular weight, hydrocarbonaceous feedstock;
pressurizing the feedstock under a hydrogen atmosphere within a hydrogen pressure range on the order of about 120 psi to 2250 psi; and
producing lower molecular weight, liquid products from the feedstock with minimal consumption of hydrogen and in the absence of a catalyst by heating the feedstock-hydrogen mixture to a temperature within the range on the order of about 450° C. to 650° C. while limiting process flow of the mixture to significantly less than a highly turbulent flow.

4,298,458
LOW PRESSURE HYDROTREATING OF RESIDUAL FRACTIONS
Frederick Banta, Elmer; Donald Milstein, Cherry Hill, and Alan W. Peters, Morrestown, all of N.J., assignors to Mobil Oil Corporation, New York, N.Y.
Filed Feb. 25, 1980, Ser. No. 124,017
Int. Cl.^{3} C10G *47/12, 45/08*
U.S. Cl. 208—112 **5 Claims**

1. In a process for hydrotreating of residual charge stock boiling above 650° F. to reduce sulfur, nitrogen and metal contaminants by contacting said charge stock and hydrogen with a fixed bed of a catalyst consisting essentially of a hydrogenation component supported on porous alumina at elevated temperature and pressure; the improvement for enhanced concurrent production of gasoline and distillate boiling below about 650° F. which comprises conducting said contacting at a high temperature of 850° to 950° F., a low pressure of 100 to 600 psig during a short contact period of high catalyst activity for production of gasoline and distillate at said conditions of temperature and pressure between about two hours and fifteen days, terminating said contacting at the end of said period, regenerating said catalyst by oxidation of combustible deposits thereon and again contacting the regenerated catalyst with said charge stock and hydrogen.

4,298,459
FLUID CATALYTIC CRACKING OF HEAVY PETROLEUM FRACTIONS
David F. Tatterson, and William D. Ford, both of Downers Grove, Ill., assignors to Standard Oil Company (Indiana), Chicago, Ill.
Filed Nov. 5, 1979, Ser. No. 91,455
Int. Cl.^{3} C10G *11/05, 11/18*
U.S. Cl. 208—120 **16 Claims**

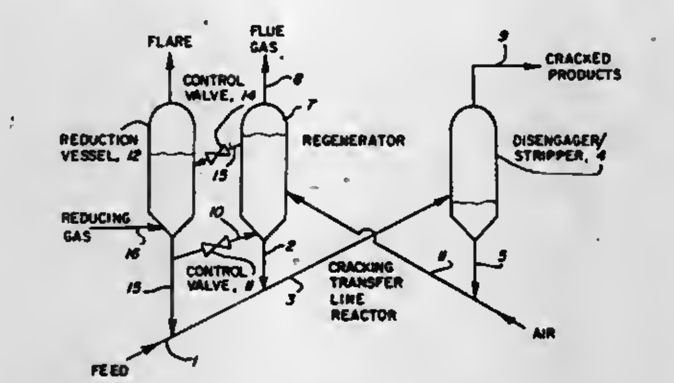

1. A process for the fluid catalytic cracking of hydrocarbon feedstocks containing metallo-organic compounds wherein (i) coke deposits on the used cracking catalyst are reduced by regeneration from a range of from about 1.0 weight percent to about 5.0 weight percent to a range from about 0.01 weight percent to about 0.5 weight percent, (ii) metal deposits in the used cracking catalyst are deactivated in sufficient amounts by alternate exposures to oxidizing and reducing zones in cycles of up to 30 minutes in duration to reduce hydrogen and coke formation during said cracking, whereby the said catalyst is suitable for reuse, which process comprises:
(a) cracking said feedstock at a temperature from about 850° F. to about 1500° F. in a reaction zone in contact with fluidized solid particles, the said particles comprising a cracking catalyst;
(b) withdrawing said particles from said reaction zone;
(c) subjecting the said particles to said oxidizing zone wherein molecular oxygen in flue gas emitted from said oxidizing zone is over 0.1 volume percent and temperature is in the range from about 900° F. to about 2200° F;
(d) withdrawing the said particles from said oxidizing zone;
(e) subjecting said particles to said reducing zone wherein a reducing atmosphere is present in a concentration from about 4 to 100 volume percent and temperature is in the range of from about 900° F. to about 1450° F.;
(f) recycling said particles to said oxidizing zone;
(g) withdrawing said particles from said reducing zone or said oxidizing zone wherein said particles are in a condition suitable for reuse in the said reaction zone.

4,298,460
PROCESS FOR PROCESSING SULFUR-CONTAINING HEAVY OIL
Kuniaki Fujimori, Tokyo; Teruo Suzuka, Kawaguchi; Yukio Inoue, Urawa, and Shirou Aizawa, Toda, all of Japan, assignors to Nippon Mining Company, Limited, Tokyo, Japan
Filed Mar. 24, 1980, Ser. No. 133,082
Claims priority, application Japan, Mar. 22, 1979, 54-33670
Int. Cl.^{3} C10G *11/02, 11/18*
U.S. Cl. 208—121 **11 Claims**

1. A process for processing a sulfur-containing heavy oil, which comprises:
in a first zone, catalytically cracking a sulfur-containing heavy oil in a fluidized manner in the presence of reduced-state catalyst particles containing about 30 to 60 wt % Fe to thereby convert the heavy oil to a light oil, depositing sulfur-containing coke on the catalyst particles, and partially fixing the decomposed sulfur compounds with reduced iron contained in the catalyst particles as iron sulfide;
in a second zone, contacting the catalyst from the first zone with an oxygen containing gas in an amount less than that theoretically required to thereby partially combust the coke on the catalyst, reduce the iron in the catalyst, and fix the sulfur compounds contained in the coke as iron sulfide; and
in a third zone, contacting the reduced-state catalyst from the second zone with steam in a fluidized manner to produce hydrogen and hydrogen sulfide and to convert the reduced iron and iron sulfide in the catalyst to iron oxides, with the iron oxide-containing catalyst obtained in the third zone being recirculated into the second zone to be reduced and a part of the reduced-state catalyst obtained in the second zone being recirculated into the first zone.

4,298,461
CATALYST AND PROCESS
Regis J. Pellet; Michael J. Gradassi, both of Wheaton, Ill., and Ralph J. Bertolacini, Chesterton, Ind., assignors to Standard Oil Company (Indiana), Chicago, Ill.
Filed Nov. 8, 1979, Ser. No. 92,569
Int. Cl.^{3} C10G *35/06*
U.S. Cl. 208—139 **8 Claims**

1. A process for reforming a hydrocarbon stream comprising naphtha which process comprises contacting said hydrocarbon stream under reforming conditions and in the presence of hydrogen with a hydrocarbon conversion catalyst comprising at least one platinum-group metal deposited on a composite comprising (1) alumina and (2) rhenium deposited on silica.

6. The process of claim 1 wherein said catalyst comprises about 0.2-0.7 wt. % rhenium and about 0.2-0.7 wt. % platinum, each being calculated as the element, about 15-25 wt. % silica, about 75-85 wt. % alumina and wherein said catalyst further comprises about 0.1-1 wt. % chlorine.

4,298,462
HYDROCARBON DEHYDROCYCLIZATION WITH AN ACIDIC MULTIMETALLIC CATALYTIC COMPOSITE
George J. Antos, Bartlett, Ill., assignor to UOP Inc., Des Plaines, Ill.
Continuation-in-part of Ser. No. 46,884, Jun. 8, 1979, Pat. No. 4,238,365, which is a division of Ser. No. 884,310, Mar. 7, 1978, Pat. No. 4,190,521. This application Nov. 17, 1980, Ser. No. 207,825
Int. Cl.^{3} C07C *15/8;* **B01J** *27/08;* **C10G** *35/09*
U.S. Cl. 208—139 **27 Claims**

1. A method for dehydrocyclizing a dehydrocyclizable hydrocarbon comprising contacting the hydrocarbon at hydrocarbon dehydrocyclization conditions with an acidic catalytic composite comprising a porous carrier material containing, on an elemental basis, about 0.01 to about 2 wt. % platinum group metal, about 0.05 to about 5 wt. % nickel, about 0.01 to about 5 wt. % zinc and about 0.1 to about 3.5 wt. % halogen; wherein the platinum group metal, catalytically available nickel and zinc components are uniformly dispersed throughout the porous carrier material; wherein substantially all of the platinum group component is present in the elemental metallic state; and wherein substantially all of the catalytically available nickel component is present in the elemental metallic state or in a state which is reducible to the elemental metallic state under hydrocarbon dehydrocyclization conditions or in a mixture of these states.

4,298,463
METHOD OF TREATING A SOUR PETROLEUM DISTILLATE
Robert R. Frame, Glenview, Ill., assignor to UOP Inc., Des Plaines, Ill.
Filed Jul. 11, 1980, Ser. No. 167,630
Int. Cl.^{3} C10G *19/00, 27/00, 29/00*
U.S. Cl. 208—189 **13 Claims**

1. A method of treating a mercaptan-containing sour petroleum distillate which comprises contacting said distillate with an elemental oxygen-containing gas and a mercaptan oxidation catalyst in the presence of additive consisting essentially of both (1.) a substituted ammonium compound represented by the structural formula:

$$\left[\begin{array}{c} R \\ | \\ R_1-N-R \\ | \\ R \end{array}\right]^{+} X^{-}$$

wherein R is a hydrocarbon radical containing up to 20 carbon atoms selected from the hydrocarbon radicals of alkyl, cycloalkyl, aryl, alkaryl and aralkyl, R_1 is a substantially straight chain alkyl radical containing from about 5 to about 20 carbon atoms, and X is an anion selected from the group consisting of halide, nitrate, nitrite, sulfate, phosphate, acetate, citrate, tartrate and hydroxide and (2.) an organic linear ionic compound having anionic and cationic constituents, the anionic constituent being a straight chain unbranched hydrocarbon moiety having from about 9 to about 24 carbon atoms in said chain and a moiety selected from the group consisting of a sulfonate, sulfate and carboxylate moiety, the cationic constituent selected from the group consisting of an alkai metal and ammonium, wherein the weight ratio of said organic linear ionic compound and said substituted ammonium compound is from about 1:20 to about 1:1 to oxidize said mercaptans in said sour petroleum distillate.

4,298,464
ROCK SEPARATOR
Klaus Djukastein, Sidney, Canada, assignor to Deroker Equipment Ltd., Sidney, Canada
Filed May 2, 1980, Ser. No. 146,004
Int. Cl.³ B07B *1/28*
U.S. Cl. 209—310 **10 Claims**

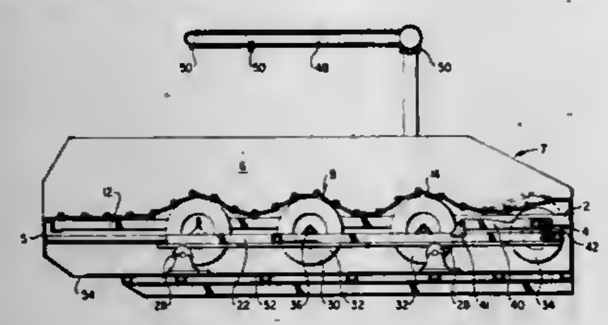

1. A rock separator of the type intended to be elevated at one end during use in placer mining comprising:
a frame having sides and front and back ends, a material entrance being provided at the front end of the frame;
a screen extending from side to side and front to back of the frame and supported within the frame, the end of the screen at the elevated end of the separator being secured to the frame, the screen comprising a plurality of rigid plates laterally extending across the frame, the plates being hinged to adjacent plates and spaced therefrom a pre-determined distance;
a carriage situated beneath the screen and means for longitudinally reciprocating said carriage with respect to the frame;
screen distortion means comprising a plurality of spaced rows of rounded projections mounted on the carriage, these projections bearing against the bottom surface of the screen whereby, during operation, they move back and forth beneath the hinged plates to create a wave action on the screen to move material across the screen from front to back;
receptacle means under the screen and screen distortion means to collect material falling through the spaces between the plates of the screen.

4,298,465
FUEL FILTER AND WATER SEPARATOR APPARATUS
James B. Druffel, Modesto, Calif., assignor to Racor Industries, Inc., Modesto, Calif.
Filed Jun. 7, 1979, Ser. No. 46,384
Int. Cl.³ B01D *29/40*
U.S. Cl. 210—304 **2 Claims**

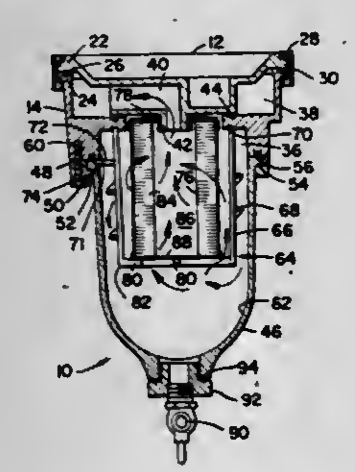

1. A fuel filter apparatus for filtering and separating low density fluid from higher density fluid and particles, which filter apparatus is operable in a variety of engines, comprising:
a bowl defining an internal fluid separation chamber;
a bracket means for mounting said bowl to the engine;
base means separate from said bracket means for defining a fluid inlet passage having an inlet port adapted to be communicable with the engine fuel line and for defining a fluid outlet passage having an outlet port adapted to be communicable with the engine fuel line, said inlet and outlet passages provided in fluid communication with said internal fluid separation chamber;
said base means including a filter element, a removable lid and clamp means for securing the removable lid to the remainder of said base means and wherein said fluid outlet passage defines a nipple means for removably mounting said filter element, which nipple means is integral with said removable lid to allow removal and inspection of said filter element with the removal of said removable lid and wherein said filter element extends into said internal fluid separation chamber;
a sleeve positioned about said filter element in said internal fluid separation chamber and spaced from said bowl, and wherein said inlet port communicates with the space between said sleeve and said bowl;
a spiral fluid flow director flange secured to the outer surface of said sleeve and extending substantially continuously, axially along said sleeve, said flow director flange for spirally directing the fluids in the space between the sleeve and the bowl so that the particles and higher density fluids seek a spiral orbit with a larger diameter than the spiral orbit of the low density fluid; and
wherein said spiral fluid flow director flange is spaced from said bowl so that particles and higher density fluids in the larger diameter orbit can flow downwardly past said spiral fluid flow director flange in the space between said bowl and said spiral fluid flow director flange;
means for selectively positioning in a plurality of positions said inlet port and said outlet port relative to said bracket means including:
a first plurality of apertures provided through said bracket means which first plurality of apertures are located in a circle having a predetermined radius;
another plurality of apertures provided through said base means, which another plurality of apertures are located on another circle having said predetermined radius and are selectively alignable with said first plurality of apertures; and
means disposable through said first plurality of apertures and said another plurality of apertures, with said first plurality of apertures and said another plurality of apertures aligned, for securing said bracket means to said base means with said base means positioned in any one of a plurality of orientations with respect to said bracket means to allow selective positioning of said inlet and outlet ports relative to said bracket means.

4,298,466
APPARATUS AND METHOD FOR VISUALLY MONITORING AN ION EXCHANGE FLUIDIZED BED
Donald P. Satchell, Jr., Clifton, Ariz., assignor to Phelps Dodge Corporation, New York, N.Y.
Filed Jan. 10, 1980, Ser. No. 110,839
Int. Cl.³ B01D *35/14;* **B01J** *8/20*
U.S. Cl. 210—94 **10 Claims**

1. Apparatus for monitoring a fluidized bed in a resin ion exchanger, the exchanger having a chamber and a source of process solution connected to the chamber, the chamber containing the fluidized bed which includes preferentially absorbing resin and process solution supplied to the chamber from the source, the apparatus comprising:
(a) a sample column having a wall at least a portion of which is transparent, a resin transfer conduit adapted to be connected to the exchanger to fluidly couple the column to the exchanger fluidized bed for enabling resin transfer between the exchanger and sample column fluidized bed, a solution sample inlet for receiving a process solution sample for supply to the column, and a solution sample outlet conduit adapted to be connected to the exchanger to fluidly couple the column to the exchanger for enabling return of the solution sample to the exchanger after the solution sample has passed through the column such that a sample fluidized bed is established in the column, at least a portion of which is visible; and
(b) a regulator having an inlet conduit adapted to be connected to the exchanger to fluidly couple the regulator to the exchanger process solution source to divert a quantity of process solution before it enters the exchanger fluidized bed for establishing the process solution sample, an orifice in fluid communication with the regulator inlet conduit for regulating the solution sample flow rate, and a regulator outlet conduit connected to the sample column inlet to fluidly couple the regulator orifice to the sample column for supplying the process solution sample at a controlled flow rate to the sample column such that the sample column fluidized bed height is visually monitorable and representative of the exchanger fluidized bed height.

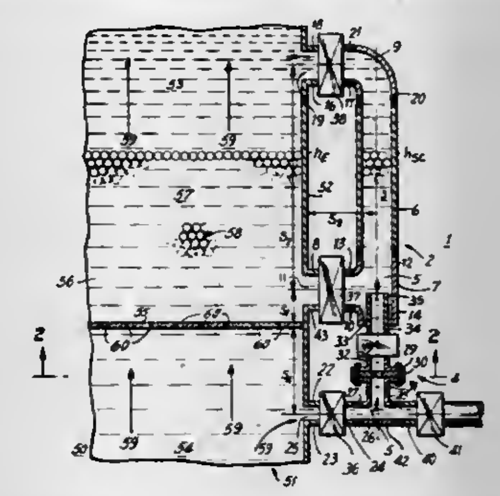

4,298,467
WATER TREATMENT SYSTEM
William J. Gartner, Bartlett, and Harry R. Henke, Northbrook, both of Ill., assignors to Panlmatic Company, Elk Grove Village, Ill.
Continuation of Ser. No. 803,577, Jun. 6, 1977, abandoned. This application Jun. 5, 1980, Ser. No. 156,810
Int. Cl.³ C02F *1/50, 1/78*
U.S. Cl. 210—96.1 **7 Claims**

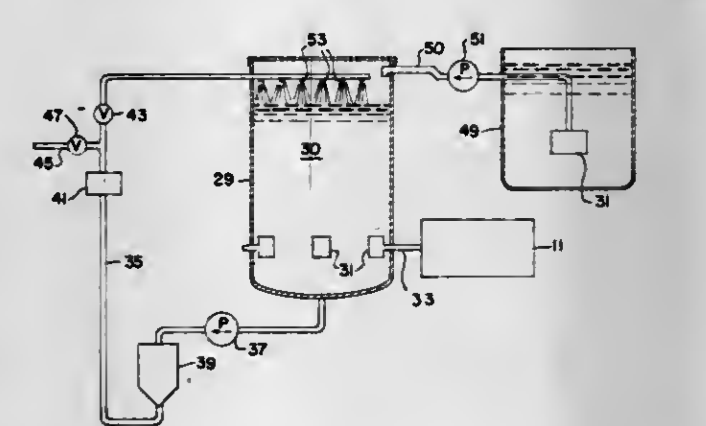

1. A continuous system for the treatment of water effluent containing such impurities as phenols, cyanides and heavy metals, said system comprising:
a vented flow control tank containing said water;
a supply conduit connecting said flow control tank to an existing source of said water;
a vented reaction tank in communication with said flow control tank containing said water, said reaction tank having a first dispenser means adapted therewith containing alkaline material, said alkaline material being added to said water to increase the pH of said water to a range of from 10 to 12;
a constant flow pump disposed within said system for continuous circulation of said water therethrough;
a vented treatment tank communicating with said reaction tank formed with upper and lower baffle plates;
ozone generating means;
diffusion means mounted near the base of said treatment tank;
an ozone line connecting said ozone generating means with said diffusion means for the dispersion of ozone throughout said water in said treatment tank for the treatment of said impurities by said ozone, said treatment of said impurities producing reacted end products including metal ions and oxides, said reacted end products being partially removed from said water by contacting said baffle plates within said treatment tank;
outlet means connected to said treatment tank for continuous flow of said water therefrom;
means communicating with said outlet means for the removal of said reacted end products remaining in said water; and,
second dispenser means connected to said outlet means containing acidic material having a low pH, said acidic material being added to said water to lower the pH to a range of from 6 to 8, whereby reaction of said impurities with said ozone and removal of said reacted end products produces treated water substantially free of said impurities.
5. A batch water treatment system for the removal of impurities from water to form treated water comprising:
a reaction tank;
a supply tank containing water to be treated;
a supply conduit connecting said supply tank with said reaction tank;
first pump means disposed along said supply conduit for pumping said water to be treated from said supply tank to said reaction tank for treatment;
first diffusion means disposed about the circumference of said reaction tank near the bottom;
ozone generating means communicating with said first diffusion means for bubbling ozone throughout said water in said reaction tank for treatment of said impurities contained in said water producing reacted end products of said impurities;
a circulation conduit connecting at one end near the bottom of said raction tank and extending at the other end into the interior of said reaction tank near the top for continuous circulation of said water through said reaction tank during the treatment of said impurities in said water, said circulation conduit including second diffusion means disposed within said reaction tank for reducing foaming at the surface of said water and to recapture excess ozone during said treatment;
third diffusion means disposed along said supply conduit within said supply tank, said supply conduit capturing excess ozone escaping from the water within said reaction tank and conveying said ozone to said third diffusion means within said supply tank for preliminary treatment of said water;
filter means connected along said circulation conduit for the removal of said reacted end products of said impurities from said water forming treated water;
drain means connected to said circulation conduit for removal of said treated water from said system once said impurities are removed;
monitoring means communicating with said circulation conduit for detecting the level of impurities in said water as said treatment progresses, said monitoring means activating said drain means when said impurities are removed to completely drain said treated water from said reaction tank, whereupon said monitoring means activates said first pump means to transfer water to be treated from said supply tank to said reaction tank for treatment, said monitoring means closing said drain means and deactivating

said first pump means when said reaction tank fills to repeat said treatment process.

4,298,468

FLUID TREATING APPARATUS

Don E. Heskett, 1 S. 336 Euclid Ave., Villa Park, Ill. 60181

Continuation of Ser. No. 937,056, Aug. 28, 1978, abandoned, which is a continuation of Ser. No. 844,437, Oct. 21, 1977, abandoned, which is a continuation of Ser. No. 659,214, Feb. 19, 1976, abandoned, which is a division of Ser. No. 370,235, Jun. 15, 1973, Pat. No. 3,960,721. This application Apr. 21, 1980, Ser. No. 142,113

Int. Cl.³ B01J *49/00*

U.S. Cl. 210—136 **2 Claims**

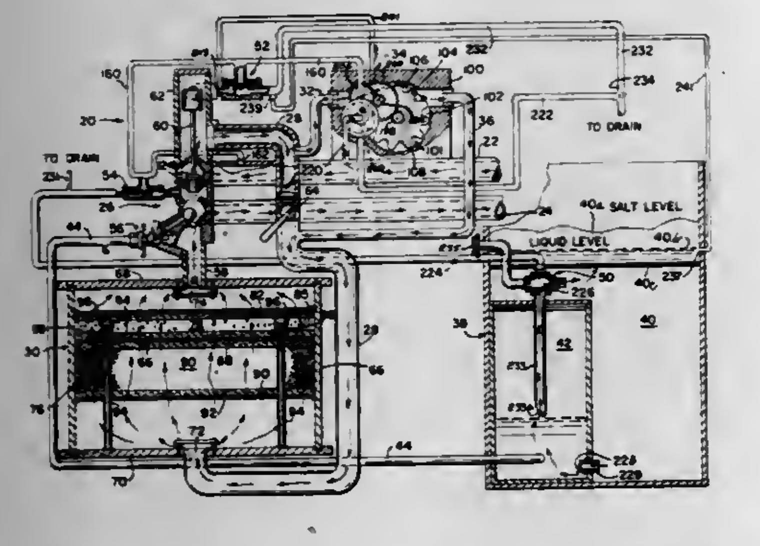

1. An apparatus for supplying a regenerant fluid to an ion exchange resin bed, said apparatus comprising: a regenerant metering and supply tank having one end thereof selectively communicable to a fluid source under line pressure and the other end thereof operatively connected to a supply line communicating with an ion exchange resin bed, said regenerant metering and supply tank being adapted to contain a supply of regenerant fluid; control means for selectively communicating said fluid source under line pressure to said regenerant metering and supply tank for selectively charging said line pressure to said one end of said regenerant metering and supply tank for displacing the contents thereof and supplying said regenerant fluid to said ion exchange resin bed by the passage thereof through said supply line; and, means for replenishing the supply of regenerant in said regenerant metering and supply tank, said replenishing means including a regenerant storage tank, conduit means communicating the interior of said storage tank with said regenerant metering and supply tank, and a flow control valve constructed and arranged to prevent flow from said regenerant metering and supply tank to said storage tank and to provide flow from said storage tank through said conduit means to said regenerant metering and supply tank when said regenerant metering and supply tank is not charged with said line pressure.

4,298,469

MANIFOLDING SYSTEM FOR OIL PURIFIERS

Ralph W. LeBlanc, and Robert M. Bingham, both of P.O. Box 52734, New Orleans, La. 70152

Filed Jul. 14, 1980, Ser. No. 167,778

Int. Cl.³ B01D *25/30*

U.S. Cl. 210—168 **5 Claims**

1. An apparatus for use with a plurality of oil refiners and contaminated oil from an oil utilizing source; said apparatus comprising:

(a) a supporting manifold adapted for supplying contaminated oil to and removing uncontaminated oil from the refiners and being independent therefrom;

(b) said supporting manifold including:

(1) a first flow chamber for receiving the contaminated oil;

(2) first connecting means for flow interconnecting said first flow chamber with each of the refiners;

(3) a second flow chamber adapted for flow communicating with the engine for transferring refined oil thereto after the refined oil has passed through the refiner; and

(4) second connecting means for flow interconnecting each of the refiners with said second flow chamber; and

(c) securing means for connecting each of the refiners to said manifold system; and wherein:

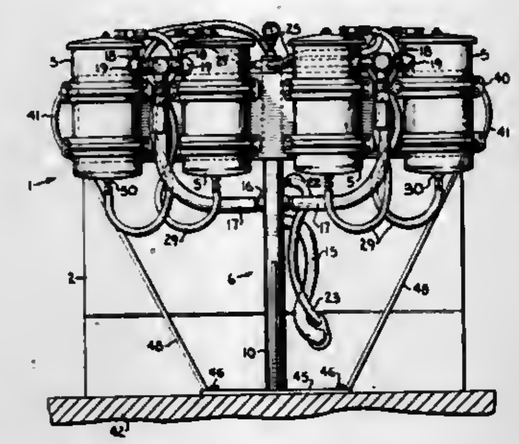

(d) said manifold comprises a tubular member being intermediately partitioned normal to an axis thereof so as to define first and second chambered portions therein; said first and second chambered portions comprising said first chamber and said second chamber respectively; and wherein

(e) each of said first and second chambered portions are adapted to be interconnected with the oil utilizing source by a single conduit respectively.

4,298,470

SEWAGE SEPTIC SYSTEM WITH LIQUID FLOW DRAINAGE CONTROL

Billy G. Stallings, 3 Crescent Dr., Kinston, N.C. 28501

Filed May 22, 1980, Ser. No. 152,395

Int. Cl.³ E03F *11/00*

U.S. Cl. 210—170 **4 Claims**

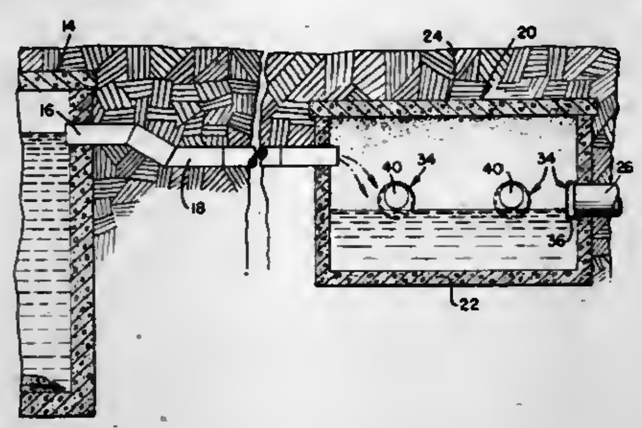

1. A septic tank system comprising a septic tank, a junction box operatively connected to receive liquid from the septic tank, and discharge means operatively connected into said junction box for discharging liquid from the junction box into a septic drain field, said discharge means including an open ended pipe having an end extending into said junction box to receive and discharge liquid therefrom, a cap member mounted on said end being located in said junction box, said cap member including an end closure face having an opening eccentrically offset from the axial center of the pipe and a flange extending from said end clousre face, said flange having an internal dimension for rotatably securing the cap to the open ended pipe, said cap member being rotatably secured to the pipe to variably position said opening with respect to the surface level of a liquid in said junction box, thereby controlling the liquid discharge flow into the drain field.

4,298,471

APPARATUS FOR EQUALIZATION OF OVERFLOW WATER AND URBAN RUNOFF IN RECEIVING BODIES OF WATER

Karl R. Dunkers, Hästskovägen 7, S-183 50 Täby, Sweden

Continuation of Ser. No. 10,929, Feb. 9, 1979, abandoned. This application Sep. 10, 1980, Ser. No. 185,684

Claims priority, application Sweden, Mar. 2, 1978, 7802392

Int. Cl.³ C02F *1/00;* E02B *13/00*

U.S. Cl. 210—170 **4 Claims**

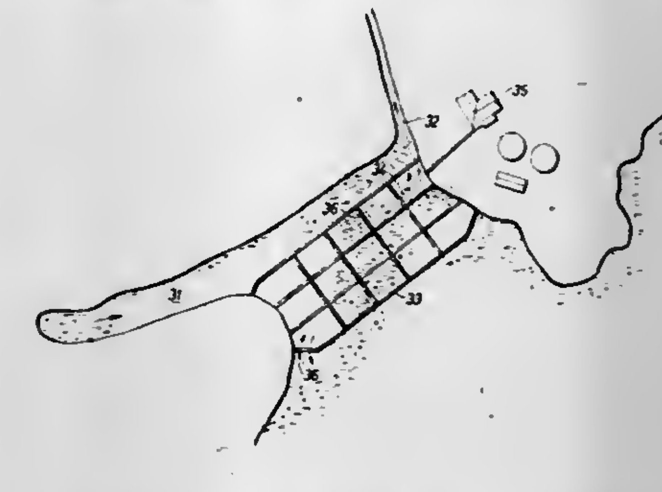

1. An apparatus for equalizing the flow of polluted water comprising a tank including a plurality of sequentially fluid connected compartments arranged in a body of water, a first compartment of said plurality being in communication with an inlet discharging polluted water at a variable rate of flow, and a last compartment of said plurality being in fluid communication with said body of water surrounding said tank such that water may flow either from said last compartment to said surrounding body of water or from said surrounding body of water into said last compartment, said tank being formed with generally vertical outer and intermediate walls, extending from the surface of said body of water to its bottom, which divide said tank into said plurality of compartments, said plurality of compartments being sequentially fluid connected by apertures provided in said intermediate walls and permitting fluid flow in both directions, a pump provided in said first compartment adjacent to the inlet for polluted water and connected to an outlet conduit for withdrawing water from said first compartment at a substantially constant rate of flow, whereby when the rate of discharge of said polluted water into said first compartment exceeds the rate of withdrawal of water by said pump, polluted water will sequentially displace water present in said compartments in a direction toward said surrounding body of water, while when the rate of discharge of polluted water into said first compartment is lower than the rate of withdrawal of water by said pump, water from said surrounding body of water will enter said last compartment and sequentially displace polluted water in the opposite direction toward said first compartment.

4,298,472

PROCESS FOR MANUFACTURING IMPREGNATED SILICAS AND THE USE OF THESE SILICAS FOR ANALYSIS OR PURIFICATION OF INDUSTRIAL PRODUCTS

Jean-Pierre Durand, La Celle St Cloud, and Nicole Petroff, Jouy en Josas, both of France, assignors to Institut Francais du Petrole, Rueil-Malmaison, France

Filed Mar. 13, 1980, Ser. No. 129,956

Claims priority, application France, Mar. 13, 1979, 79 06383

Int. Cl.³ C02F *1/68;* B01J *31/02;* C07C *7/12*

U.S. Cl. 210—198.2 **17 Claims**

1. A process for manufacturing an adsorbent composition comprising impregnated silica, which comprises passing a substantially anhydrous solution of a polar organic compound in a non-polar organic diluent through a bed of substantially anhydrous silica particles, under an input pressure of at least 200 bars absolute, and the amount of said solution passed being sufficient for modifying the adsorbent properties of the silica particles by providing said silica particles with the selective properties of said polar organic compound, without substantially impairing the absorbing efficiency of said silica particles.

16. The use of a column packed with an impregnated silica as obtained by the process of claim 1 to separate the constituents of a mixture of organic compounds comprising passing the mixture of organic compounds through the column at a relatively low pressure as compared to the pressure used to impregnate the silica.

4,298,473

DRUM FILTER APPARATUS

Floyd H. Wyman, Mauldin, S.C., assignor to Marshall and Williams Company, Greenville, S.C.

Continuation-in-part of Ser. No. 923,706, Jul. 11, 1978, Pat. No. 4,224,166. This application May 16, 1980, Ser. No. 150,323

Int. Cl.³ B01D *33/10*

U.S. Cl. 210—213 **8 Claims**

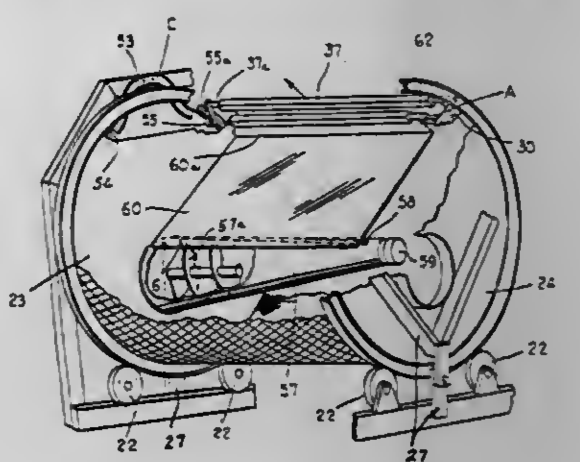

1. A liquid filter having a cylindrical horizontally disposed perforate drum for retaining solids therein while permitting filtered liquid to flow therethrough, having means supporting the drum for rotation about a horizontal axis, comprising:

a head member carried within said perforate drum at each end thereof stationary with respect to said perforate drum which rotates thereabout;

a driven conveyor carried adjacent the top of and extending substantially the entire length of said drum above the horizontal axis;

means removing solids retained within said drum and depos-

iting them adjacent the top thereof by gravity onto said conveyor for removal through a head member above said horizontal axis:

a distribution pipe carrying the liquid to be filtered through a head member;

a baffle extending on one side thereof above a flow of liquid from said distribution pipe; and

a discharge ramp carried adjacent an end of said baffle remote from said distributor pipe extending arcuately substantially in spaced relation to an inner surface of said drum above said conveyor;

whereby said means removing solids removes such solids collected between said drum and said discharge ramp and deposits same onto said conveyor.

4,298,474
MULTIPLE FILTER VESSEL

Donald A. Sillers, Jr., Dallas, Tex., assignor to Peerless Manufacturing Company, Dallas, Tex.
Filed Dec. 14, 1979, Ser. No. 103,857
Int. Cl.³ B01D *46/00*
U.S. Cl. 210—238 **41 Claims**

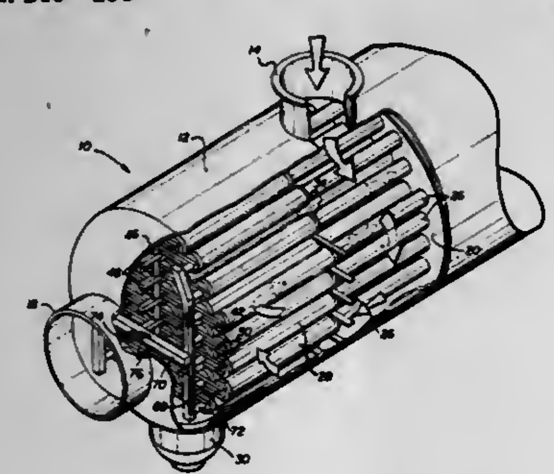

1. A filter vessel comprising:

a longitudinal vessel body having forward and rearward ends;

an inlet port in said vessel body for admitting fluid to be filtered;

an outlet port in said vessel body for discharging filtered fluid;

an access port in said forward end of said vessel which is smaller in diameter than said vessel and large enough to permit passage of the arm of a person therethrough;

a plurality of horizontally disposed longitudinal elongated filter elements having an enclosing peripheral wall and forward and rearward ends positioned intermediate said inlet and outlet ports for filtering said fluid; and

mounting means, for mounting said filter elements longitudinally and horizontally within said vessel body proximate said forward end such that one or more of said filter elements is non-aligned with said access port, said mounting means comprising;

(a) support means for said forward end of said filter elements positions sufficiently close to the access port in the forward end of said vessel to permit placement and removal of the filter elements by a person whose body remains outside the vessel, and,

(b) locking means for allowing lateral movement of said filter elements in an unlocked mode and for retaining said filter elemetns in a horizontally disposed position intermediate said inlet and outlet ports in a locked mode.

4,298,475
WATER PURIFICATION SYSTEM

William J. Gartner, 153 Williamsburg Dr., Bartlett, Ill. 60103
Filed Jul. 18, 1980, Ser. No. 170,023
Int. Cl.³ B01D *29/08*
U.S. Cl. 210—266 **2 Claims**

1. A portable water purifying apparatus for treating contaminated water to provide drinking water solely from the passage of said contaminated water through said apparatus comprising an elongated tube having a diameter of a size as to allow suction to be applied by a user's mouth, said tube having an interior conduit connecting an upper outlet and a lower inlet, said conduit having successive adjacent sections from said inlet and said outlet, a first section containing a primary filter means for removing particulate matter, a second section containing a halogenated ion exchange resin for removing harmful bacteria, viruses and the like, a third section containing a secondary filtration material for removing additional particulate material, a fourth section containing activated carbon granules for removing undesirable odors, tastes and hydrocarbons, and a fifth section containing a secondary filter means for removing substantially all remaining particulate matter, whereby on the application of said suction when said lower inlet is inserted into a source of contaminated water, said contaminated water is treated to permit the ingestion of water directed from said upper outlet.

4,298,476
AIR BLADE CONSTRUCTION FOR CHIP WRINGER

Robert H. Dudley, Portage, Mich., assignor to Reclamet, Inc., Kalamazoo, Mich.
Filed Dec. 10, 1979, Ser. No. 102,292
Int. Cl.³ B01D *33/10*
U.S. Cl. 210—373 **7 Claims**

1. A centrifuge for continuously separating a lubricating liquid from lubrication carrying metal shavings or the like, comprising:

a motor having a rotatable drive shaft;

substantially bell-shaped centrifugal separator bowl means having an annular side wall, an end wall, a shaving dispensing edge and openings in said side wall for the discharge of liquid therethrough and being located intermediate said end wall and said shaving dispensing edge;

an inlet conduit located at an open end of said separator bowl means for facilitating a delivery of said shavings at the center of said end wall, said inlet conduit terminating at a location axially spaced from said end wall;

power transmission means for transmitting rotatable output from said drive shaft to said separator bowl means;

shaving collecting chamber means including an annular surface surrounding said shaving dispensing edge of said separator bowl means radially outwardly spaced therefrom for collecting shavings discharged by centrifugal action from said separator bowl means;

an outlet duct means connected to said shaving collecting chamber means and having a central axis extending tangential of said shaving collecting chamber means and away therefrom;

whereby said shaving collecting chamber means will collect said shavings emanating from said dispensing edge and the kinetic energy of said moving shavings will effect a movement thereof along said annular surface and into said outlet duct means for discharge thereof; and

a plurality of angularly spaced blade means affixed to said end wall of said separator bowl means, said blade means extending axially of said separator bowl means away from

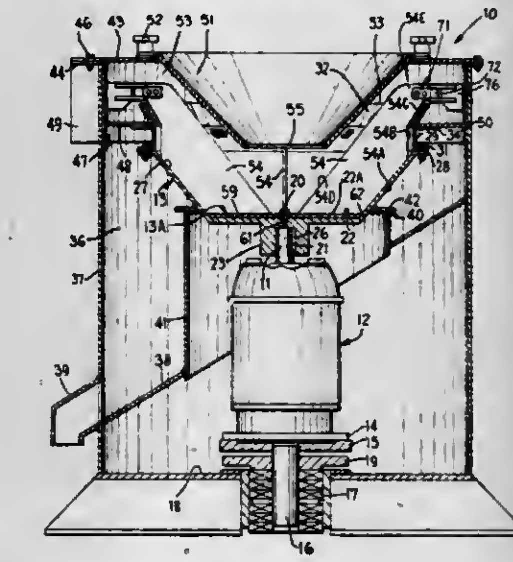

said end wall axially across said liquid discharge openings and terminating adjacent said shaving dispensing edge, each of said blade means having a continuous circumferentially facing surface along the axial length thereof for effecting a movement of air through said inlet means, into said shaving collecting chamber means and out through said outlet duct means to effect an entrainment of said shavings in said air movement for discharge cut through said outlet duct means, each of said blade means extending radially inwardly from said side wall, at least a blade portion of said blade means adjacent said discharge openings and said dispensing edge occupying a majority of the spacing between said inlet conduit and said side wall to thereby limit the bouncing of said shavings in said separator bowl means and out thereof before being brought up to the speed of rotation of said separator bowl means.

4,298,477
REGENERATION OF CATION ION-EXCHANGE POLISHERS

Jack L. Cole, Naperville, Ill., assignor to Nalco Chemical Company, Oak Brook, Ill.
Continuation of Ser. No. 144,266, Apr. 28, 1980, abandoned. This application Nov. 6, 1980, Ser. No. 204,596
Int. Cl.³ B01J *49/00;* **C02F** *1/42*
U.S. Cl. 210—674 **4 Claims**

1. A method of treating boiler condensate water to remove undesirable cations which comprises the steps of: providing a bed of cation-exchange resin; passing water which is to be treated through said resin bed; and regenerating said resin with an aqueous solution of a morpholine.

4,298,478
METHOD OF, AND A MAGNETIC SEPARATOR FOR, SEPARATING MAGNETIZABLE PARTICLES FROM A FLUID

James H. P. Watson, and James P. B. Jones, both of Cornwall, England, assignors to English Clays Lovering Pochin & Co., Ltd., Cornwall, England
Division of Ser. No. 950,543, Oct. 12, 1978, Pat. No. 4,214,986, which is a continuation of Ser. No. 792,015, Apr. 28, 1977, abandoned. This application Aug. 21, 1979, Ser. No. 68,500
Claims priority, application United Kingdom, Apr. 29, 1976, 17567/76
Int. Cl.³ B01D *35/06*
U.S. Cl. 210—695 **5 Claims**

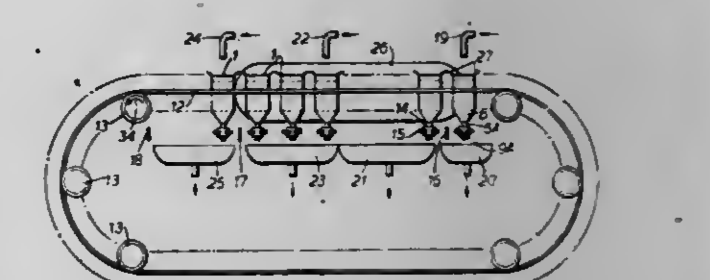

1. A method of separating magnetisable particles from a fluid utilizing a chain of separating chambers, each separating chamber having a closable outlet and a valve mean connected thereto in a bottom region thereof, and containing a respective fluid-permeable mass of magnetisable material, which method comprises performing the following operations on each separating chamber:

(a) at least partially filling the separating chambers with the outlet thereof closed with fluid containing magnetisable particles such that the fluid and magnetisable particles contact the mass of magnetisable material, the fluid and particles being prevented from escaping from the separating chamber during filling by the valve means being in a first position, for preventing flow through the outlet;

(b) either before, during or after filling, moving the separating chamber in a first direction into a separating zone in which a magnetic field is established by magnet means comprising pole pieces the faces of which are oriented in planes, the normals to which are parallel to a second direction, perpendicular to the first direction;

(c) keeping the said valve in its first position whereby the fluid containing the magnetisable particles is held, within the separating chamber, substantially stationary with respect to the mass of magnetisable material for a finite period of time after completion of steps (a) and (b);

(d) putting the valve in a second position, in which it allows flow through the outlet at a relatively slow rate, so as to drain fluid from the separating chamber in a third direction perpendicular to said first and second directions as the separating chamber passes through the separating zone after the said finite period of time;

(e) after draining, moving the separating chamber out of the separating zone, and

(f) removing magnetisable particles which have been retained within the mass of magnetisable material by magnetic attraction by putting the valve to a third position, in which it allows flow through the outlet at a relatively high rate, and flushing further fluid through the mass of magnetisable material, the valve thereafter being returned to its first position; wherein the separating chambers are moved one after another into and out of the separating zone.

4,298,479
SECONDARY RECOVERY PROCESS UTILIZING THICKENED WATER
Walter D. Hunter, Houston, Tex., assignor to Texaco Development Corporation, White Plains, N.Y.
Continuation-in-part of Ser. No. 876,389, Feb. 9, 1978, abandoned. This application Feb. 4, 1980, Ser. No. 118,283
Int. Cl.³ E21B *43/22*
U.S. Cl. 252—8.55 D **10 Claims**

1. A process for recovering hydrocarbons from a subterranean hydrocarbon-bearing formation penetrated by an injection well and a production well which comprises:
(a) injecting into the formation via an injection well a driving fluid comprising water having dissolved therein about 0.01 to about 2.0 weight percent of a water-soluble ethoxylated sulfonated poly-(2,6-dialkyl phenol) having a number average molecular weight of from about 5000 to about 250,000.
(b) forcing the said fluid through the formation, and
(c) recovering hydrocarbons through the production well and wherein the said water-soluble ethoxylated sulfonated poly-(2,6-dialkyl phenol) comprises recurring A-type units of the formula:

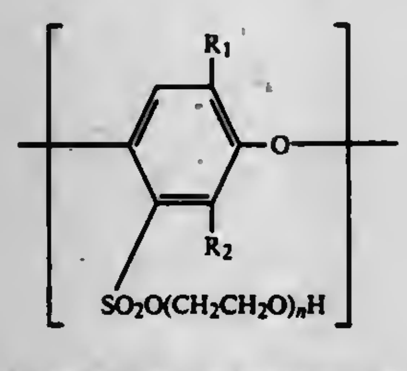

wherein R_1 and R_2 are independently selected straight chain alkyl groups of 1 to 3 inclusive carbon atoms and n is an integer of from 3 to about 30, and recurring B-type units of the formula:

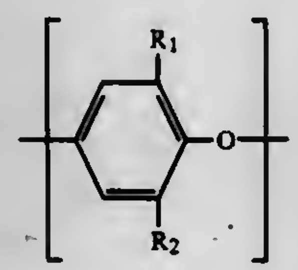

wherein R_1 and R_2 have the same meaning as previously described and wherein in the said ethoxylated, sulfonated poly-(2,6-dialkyl phenol) the weight percent of A-type units ranges from about 20 to about 60 with the balance being B-type units.

4,298,480
DETERGENT SOFTENER COMPOSITIONS
Harold E. Wixon, New Brunswick, N.J., assignor to Colgate Palmolive Co., New York, N.Y.
Continuation-in-part of Ser. No. 968,532, Dec. 11, 1978, Pat. No. 4,230,590. This application Nov. 21, 1979, Ser. No. 96,370
The portion of the term of this patent subsequent to Oct. 28, 1997, has been disclaimed.
Int. Cl.³ C11D *1/86, 10/04, 17/06;* **D06M** *13/46*
U.S. Cl. 252—8.75 **30 Claims**

1. A detergent softener composition capable of imparting improved softness, detergency, antistatic and soil antiredeposition properties to fabrics treated therewith in the wash cycle of a laundering process comprising spray-dried detergent particles including by weight from about 5 to 40% of water soluble nonsoap organic surfactant, at least about 90% thereof being of the anionic type, and from about 10 to 60% of water soluble, neutral to alkaline builder salt; and discrete particles of soap and discrete particles of cationic amine softener, wherein said soap particles do not contain cationic softener and said cationic softener particles do not contain soap, wherein said discrete particles are in admixture with said spray-dried detergent particles and said spray-dried detergent particles do not include cationic amine softener, and wherein said soap is a water soluble or dispersible fatty acid soap, and comprises from about 2 to 20% by weight of the composition, and said cationic softener is a cationic amine softener selected from the group consisting of (a) aliphatic di-(lower) C_1–C_4 alkyl, di(higher) C_{14}–C_{24} alkyl quaternary ammonium salts (b) heterocyclic compounds, and mixtures of (a) and (b), said cationic softener comprising from about 2 to about 20% of said composition, the weight ratio of soap to softener being from about 8:1 to 1:3 and the percent concentration of anionic surfactant being at least about $1.5x+5$, wherein x represents the percent concentration of softener.

13. A composition according to claim 1 wherein said anionic detergent is linear dodecyl benzene sulfonate.

4,298,481
HIGH TEMPERATURE GREASE COMPOSITIONS
David B. Clarke, Annandale, N.J., assignor to Tenneco Chemicals, Inc., Saddle Brook, N.J.
Filed Feb. 23, 1979, Ser. No. 15,533
Int. Cl.³ C10M *7/24*
U.S. Cl. 252—21 **12 Claims**

1. A high temperature grease composition that comprises
(a) 80% to 94% of a base fluid that is a dialkyl ester of hydrogenated dimer acids having 32 to 52 carbon atoms and containing less than 8% based on the weight of dimer acids of trimer acids, wherein each alkyl group has 5 to 16 carbon atoms;
(b) 0.2% to 6% of an additive system that comprises
(i) 0.1% to 2% of an antioxidant component that comprises an aromatic amine selected from the group consisting of secondary amines having the structural formula

$$R'-\overset{\displaystyle H}{\overset{|}{N}}-R''$$

wherein R' and R'' each represents phenyl, alkylphenyl, naphthyl, or alkylnaphthyl; phenothiazine; alkylphenothiazines; alkoxyphenothiazines; alkyl-hydroxybenzylcarbazoles; and mixtures thereof;
(ii) 0.08% to 2% of a rust-inhibiting component selected from the group consisting of Group II metal salts, ammonium salts, and amine salts of petroleum sulfonic acids, alkylated naphthalene sulfonic acids, alkenylsuccinic acids, and sorbitan esters of C_{10-18} fatty acids;
(iii) 0.01% to 1% of a metal-passivating component selected from the group consisting of benzimidazole, benzotriazole, alkylbenzotriazoles, aminobenzotriazoles, methylene bis benzotriazole, the reaction product of benzotriazole with C_{12-18} secondary amines and formaldehyde, phenothiazine, naphthotriazole, salicylaldehyde semicarbazone, alkylsalicylaldehyde semicarbazones, C_{12-18} fatty acid salts of salicylalaminoguanidine, and mixtures thereof; and
(iv) 0.01% to 1% of a load-bearing component selected from the group consisting of Group II metal diorgano dithiophosphates and thiocarbamates, amine salts of partially-esterified phosphoric and chlorophosphonic acids, alkyl mercaptothiadiazoles, aryl phosphates and thiophosphates, chlorinated diphenyls, polyphosphites, and mixtures thereof; and
(c) 5% to 20% of a thickener component that contains 4.7% to 19.8% of an oleophilic surface-modified clay and 0.2% to 1% of a dispersant selected from the group consisting of

C_{2-6} alkylene glycols, fatty acids esters of said glycols, carbonates of said glycols, and lower alkyl ketones,
all percentages being percentages by weight based on the weight of the grease composition unless otherwise specified.

4,298,482
LOW TEMPERATURE PROCESS OF PREPARING $Mg(OH)_2$ SUSPENSIONS
William J. Cheng, and David B. Guthrie, both of St. Louis, Mo., assignors to Petrolite Corporation, St. Louis, Mo.
Filed Jun. 20, 1979, Ser. No. 50,383
Int. Cl.³ C10M *1/10, 3/02, 5/02, 7/02*
U.S. Cl. 252—25 **14 Claims**

1. A process of preparing stable suspensions of $Mg(OH)_2$ which comprises blending at low or ambient temperatures $Mg(OH)_2$ powder with less than a stoichiometric amount of an acid in a relatively non-volatile, relatively stable fluid containing a dispersant which is oil soluble and which is capable of retaining the magnesium compound formed by particle size reduction in stable suspension so as to effect a reduction of the size of the particles of the starting $Mg(OH)_2$ powder to a size which is readily suspended and which is capable of becoming a lasting, fluid suspension, the total amount of acid present as a reactant and as the dispersant being less than the stoichiometric amount of acid required to react with the $Mg(OH)_2$ powder.

4,298,483
METAL FORMING LUBRICANTS
Robert H. Davis, Pitman, and Richard S. Herd, Woodbury, both of N.J., assignors to Mobil Oil Corporation, New York, N.Y.
Filed Dec. 17, 1979, Ser. No. 104,494
Int. Cl.³ C10M *1/48, 3/42*
U.S. Cl. 252—32.7 HC **15 Claims**

1. An antiwear/extreme pressure lubricant composition consisting essentially of a major amount of a hydrocarbon oil which has been phosphosulfurized in the presence of a metal oxide, the metal being selected from the group consisting of Group I or Group II of the Periodic Table, or cobalt, or molybdenum and a minor amount of an organic acid ester.

4,298,484
NITROGEN-CONTAINING PRODUCTS OF PHOSPHOSULFURIZED ESTERS AND LUBRICANTS CONTAINING SAME
Andrew G. Horodysky, Cherry Hill, and Joan M. Kaminski, Clementon, both of N.J., assignors to Mobil Oil Corporation, New York, N.Y.
Filed Apr. 21, 1980, Ser. No. 141,823
Int. Cl.³ C10M *1/48*
U.S. Cl. 252—46.7 **20 Claims**

1. A compound prepared by (1) reacting an ester or mixtures thereof of the formula

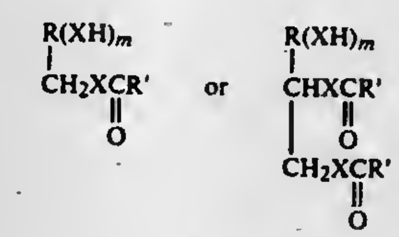

wherein m is from 1 to 4, X is oxygen or sulfur, R and R' are hydrocarbyl groups having from 1 to 23 carbon atoms with a phosphorus polysulfide, wherein about 2 to about 12 moles of ester are reacted per mole of polysulfide and wherein the temperature of reaction is from about 60° C. to about 140° C., and then (2) reacting the product from (1) with at least a stoichiometric amount of an amine, the reaction temperature of this step being from about 50° C. to about 125° C.

11. A lubricant composition comprising a major proportion of a mineral or synthetic lubricating oil or a grease therefrom and a friction reducing amount of the compound of claim 1.

4,298,485
PROCESS OF PREPARING LUBRICATING OIL ADDITIVE CONTAINING TUNGSTEN
John A. Powers, New Albany, and James N. Christini, Towanda, both of Pa., assignors to GTE Products Corporation, Stamford, Conn.
Filed Jun. 16, 1980, Ser. No. 159,542
Int. Cl.³ C10M *1/10, 1/54*
U.S. Cl. 252—49.7 **7 Claims**

1. A process for producing a lubricating oil additive comprising a tertiary alkyl amine, greater than about 15 percent by weight tungsten, and less than about 3 percent by weight water said process comprising contacting an aqueous slurry consisting essentially of from about 3 to about 4 parts by weight water per part by weight ammonium paratungstate with about 3 parts by weight of an organic phase per part by weight ammonia paratungstate wherein said slurry comprises a solid portion of ammonium paratungstate, wherein said organic phase consists essentially of a major portion by weight of a tertiary alkyl amine having the formula $C_nH_{2n+1}NH_2$, where n is from 18 to 22, said contacting being carried out until substantially all of said solids are solubilized by extracting ammonium paratungstate from the aqueous phase into the organic phase while solid ammonium paratungstate is being solubilized into the aqueous phase, removing substantially all of the water present in the aqueous phase by subjecting said aqueous phase to vaporizing conditions to form a lubricating oil additive comprising less than about 3 percent by weight water and containing greater than about 15 percent by weight tungsten based on the amount of ammonium paratungstate used during contacting.

4,298,486
FRICTION REDUCING ADDITIVES AND COMPOSITIONS THEREOF
Andrew G. Horodysky, Cherry Hill, and Joan M. Kaminski, Clementon, both of N.J., assignors to Mobil Oil Corporation, New York, N.Y.
Filed Nov. 23, 1979, Ser. No. 97,066
Int. Cl.³ C10M *1/54, 1/10*
U.S. Cl. 252—49.6 **12 Claims**

1. A lubricant composition comprising a major amount of an oil of lubricating viscosity or grease prepared therefrom and a minor amount of an additive, effective for providing friction reducing, copper anticorrosion, and antioxidant properties to said composition consisting of a boric acid salt or borate ester of a hydroxylakyl alkyl or alkenyl imidazoline in which said imidazoline has the following generalized structure:

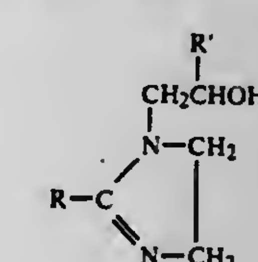

where R is C_5-C_{25} alkyl or alkenyl and R' is hydrogen or C_1–C_{25} alkyl.

7. A borated compound prepared by reacting an hydroxyalkyl alkyl or alkenyl imidazoline and boric acid in a solvent or mixture of solvents at temperatures of from 110° to 200° C. under reaction conditions whereby a boric acid salt or a borate ester of said imidazoline is prepared wherein said imidazoline is represented by the formula:

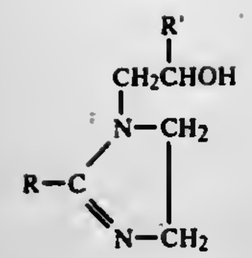

wherein R is C_5–C_{25} alkyl or alkenyl group and R^1 is hydrogen or C_1–C_6 alkyl.

4,298,487
HYDRAULIC FLUID COMPOSITIONS COMPRISING BORATE ESTERS OF OXYALKYLATED HETEROCYCLIC OR ALICYCLIC AMINES
Fumihide Genjida, Yawata; Kunio Kawakatsu, Kyoto, and Motohiko II, Uji, all of Japan, assignors to Sanyo Chemical Industries, Ltd., Kyoto, Japan
Filed Apr. 4, 1980, Ser. No. 137,387
Claims priority, application Japan, Apr. 5, 1979, 54-41801
Int. Cl.[3] C10M *3/26;* **C09K** *5/00*
U.S. Cl. 252—75 **32 Claims**

1. A hydraulic fluid composition which comprises (A) at least one nitrogen atom-containing borate ester having the formula:

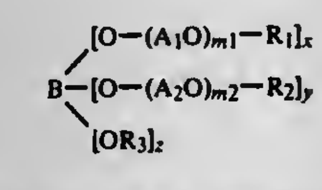 (1)

wherein A_1 and A_2 are independently C_2–C_4 alkylene, R_1 and R_2 are independently C_1–C_4 alkyl, m_1 and M_2 are independently 2 to 8, R_3 is a residue of an oxyalkylated heterocyclic amine or of an oxyalkylated alicyclic amine, x and y are zero, 1 or 2, z is 1, 2 or 3, and x, y and z satisfy the equation $x+y+z=3$, and when z is 2 or 3, R_3 are same or different; and (B) at least one fluid selected from the group consisting of (a) other borate esters, (b) polyoxyalkylene compounds, and (c) mixtures of (a) and (b), wherein component (A) is present in a sufficient amount to provide a composition having improved wet reflux boiling point with respect to conventional polyoxyalkylene hydraulic fluids and reduced tendency to form precipitates as compared with conventional borate ester hydraulic fluids in the rubber swelling test according to JIS rubber swelling test K 2233.

4,298,488
HYDRAULIC FLUID COMPOSITION CONTAINING GLYCOL ETHERS AND BORATE ESTER
Yoshiharu Tanizaki; Kenichiro Minagawa, both of Yokohama, and Yoshinori Takano, Tokyo, all of Japan, assignors to Nippon Oil and Fats Co., Ltd., Tokyo, Japan
Filed Aug. 22, 1979, Ser. No. 68,697
Claims priority, application Japan, Aug. 26, 1978, 53-104297
Int. Cl.[3] C09K *5/00;* **C10M** *3/16, 3/20*
U.S. Cl. 252—78.1 **5 Claims**

1. A hydraulic fluid composition consisting mainly of (A) 20–60% by weight of polyoxyalkylene glycol monoalkyl ether having the following general formula (1); (B) 1–25% by weight of polyoxyalkylene glycol dialkyl ether having the following general formula (2); (C) 15–50% by weight of borate ester of polyoxyalkylene glycol monoalkyl ether having the following general formula (3),

$$R^1O(C_mH_{2m}O)_nH \quad (1)$$

$$R^1O(C_mH_{2m}O)_nR^2 \quad (2)$$

$$[R^1O(C_mH_{2m}O)_n]_3B \quad (3)$$

wherein R^1 and R^2 represent alkyl groups having 1–3 carbon atoms, $C_mH_{2m}O$ represents an oxyalkylene group, m represents a positive integer of 2–4, n represents a positive integer of 2–6, and the oxyethylene group content in the total oxyalkylene group of the compounds (1), (2) and (3) is 40–90% by weight; and (D) 1–25% by weight of a high molecular weight polyoxyalkylene compound having a kinematic viscosity of at least 8 cst at 100° C. and containing at least 90% by weight of polyoxyalkylene group in the molecule and 15–80% by weight of oxyethylene group based on the total oxyalkylene group in the molecule.

4,298,489
PHOSPHATE ESTER-BASED FIRE RESISTANT HYDRAULIC FLUID CONTAINING AN ALIPHATIC POLYESTER
Kenjiro Ohba, Osaka; Kaichi Izumi, Tokyo, and Shinichiro Yasuda, Wakayama, all of Japan, assignors to Kao Soap Co., Ltd., Tokyo, Japan
Continuation of Ser. No. 879,962, Feb. 21, 1978, abandoned. This application Jun. 28, 1979, Ser. No. 52,746
Claims priority, application Japan, Feb. 25, 1977, 52-20113
Int. Cl.[3] C10M *3/40*
U.S. Cl. 252—78.5 **12 Claims**

1. A fire-resistant hydraulic fluid consisting essentially of (a) a phosphate triester or a mixture thereof which is derived from phosphoric acid and an alcohol or a mixture thereof selected from the group consisting of phenol and alkyl-substituted phenols with the proviso that the ratio of the number of carbon atoms in the aliphatic hydrocarbon groups to the total number of carbon atoms in the triester is less than 0.16, and (b) 0.5 to 10% by weight, based on the weight of the phosphate triester, of an aliphatic polyester derived from an alkane-dicarboxylic acid having 3 to 24 carbon atoms and an alkylene glycol having 2 to 10 carbon atoms, said polyester having a molecular weight of 10,000 to 50,000.

4,298,490
PROCESS FOR THE PRODUCTION OF WASHING POWDERS OF STABILIZED OR ENHANCED APPEARANCE WHICH CONTAIN FLUORESCENT WHITENING AGENTS
Burkhart Lange, Basel; Suresh C. Agarwal, Bottmingen; Werner Fringeli, Laufen, and Franz Günter, Riehen, all of Switzerland, assignors to Ciba-Geigy Corporation, Ardsley, N.Y.
Filed Dec. 10, 1979, Ser. No. 102,056
Claims priority, application Switzerland, Dec. 22, 1978, 13105/78; Sep. 12, 1979, 8251/79
Int. Cl.[3] C09K *11/02, 11/06;* **C11D** *3/42, 11/00*
U.S. Cl. 252—91 **19 Claims**

1. A process for the production of a washing powder of stabilized or enhanced appearance which contains one or more fluorescent whitening agents of the formula

(1)

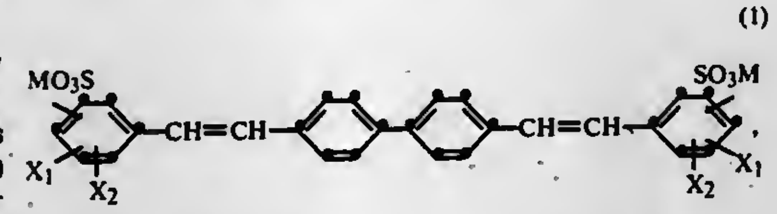

wherein X_1 is hydrogen, chlorine, bromine, or alkyl or alkoxy, each containing 1 to 4 carbon atoms, X_2 is hydrogen or alkyl of 1 to 4 carbon atoms, and M is hydrogen, an alkali metal, ammonium or amine salt ion, which process comprises first dissolving or dispersing the fluorescent whitening agent or agents in a mixture of water and a polyvinyl alcohol or polyvinyl pyrrolidone polymer which is soluble or swellable in water, wherein the ratio of fluorescent whitening agent or agents to polymer in the aqueous solution or dispersion, or in the dry powder obtained therefrom, is 9:1 to 1:10, and adding the solution or dispersion so obtained, which may additionally contain a polyethylene glycol, a surfactant containing ethyleneoxy and/or propyleneoxy groups, or a cellulose ether, to the washing powder slurry and subsequently drying this slurry, or, optionally after the addition of further washing powder components, spraying said solution or dispersion onto a dried unfinished washing powder.

8. A process according to claim 1, wherein the mixture of water and polyvinyl alcohol or polyvinyl pyrrolidone, in which the fluorescent whitening agent is dissolved or dispersed, additionally contains a polyethylene glycol, a surfactant containing ethyleneoxy and/or propyleneoxy groups, or a cellulose ether, in an amount of 1 to 50 times the amount of polyvinyl alcohol or polyvinyl pyrrolidone, or mixture thereof, present in the aqueous mixture.

4,298,491
PROCESS FOR MAKING DETERGENT COMPOSITIONS
Andrew C. Coxon, Wirral; David J. Edge, Chester, and Mark L. L. Lapper, York, all of England, assignors to Lever Brothers Company, New York, N.Y.
Filed May 19, 1980, Ser. No. 150,824
Claims priority, application United Kingdom, May 17, 1979, 17226/79
Int. Cl.[3] C09K *15/02, 15/20;* **C11D** *11/00, 11/02*
U.S. Cl. 252—95 **7 Claims**

1. In a process for the production of a detergent powder by spray-drying an aqueous slurry comprising 3% or more by weight of a nonionic surfactant, the improvement which comprises inhibiting autoxidation by incorporating from 0.05 to 2% by weight of a charge transfer agent selected from the group consisting of stannic chloride, silver perchlorate, and iodine the percentages being based on the fully formulated detergent powder.

7. In a process for the production of a detergent powder by spray-drying an aqueous slurry comprising 3% or more by weight of a nonionic surfactant, the improvement which comprises inhibiting autoxidation by incorporating from 0.05 to 2% by weight of a charge transfer agent selected from the group consisting of 1, 3, 5 trinitobenzene; tetrachlorobenzoquinone; 1, 3, 5 triacetobenzene, 1, 2, 4 triacetobenzene; 1, 3, 5 trimethoxybenzene; 1, 2, 3 trimethoxybenzene; hexamethyl benzene; 1, 2, 4, 5 tetramethyl benzene and hexaketocyclohexane, the percentages being based on the fully formulated detergent powder.

4,298,492
BUILT LIQUID DETERGENT COMPOSITION
Guido C. van den Brom, Nieuw-Beijerland, Netherlands, assignor to Lever Brothers Company, New York, N.Y.
Filed Jun. 9, 1980, Ser. No. 157,596
Claims priority, application United Kingdom, Jun. 21, 1979, 21744/79; Nov. 9, 1979, 38987/79
Int. Cl.[3] C11D *7/56*
U.S. Cl. 252—97 **4 Claims**

1. An aqueous, built liquid detergent composition comprising:

(a) from 2 to 20% by weight of an anionic, nonionic, cationic or zwitterionic synthetic detergent active compound or mixtures thereof;
(b) from 2 to 13% by weight of sodium tripolyphosphate;
(c) from 2 to 16% by weight of tetrapotassium pyrophosphate;
(d) from 0.1 to 8% by weight of an alkalimetal C_8–C_{22} fatty acid soap;
(e) from 0.1 to 2% by weight of mono-, di- or triethanol or -isopropanolamine;
(f) from 1–15% by weight of a hydrotrope;
(g) from 40–75% by weight of water.

4. A composition according to claim 1, further comprising from 1.5 to 7.5% by weight of hydrogen peroxide.

4,298,493
METHOD FOR RETARDING GELATION OF BICARBONATE-CARBONATE-SILICATE CRUTCHER SLURRIES
Ronald S. Schreiber, Highland Park, N.J., assignor to Colgate-Palmolive Company, New York, N.Y.
Filed Oct. 4, 1979, Ser. No. 81,799
Int. Cl.[3] C11D *7/12, 7/14, 11/02, 17/06*
U.S. Cl. 252—135 **16 Claims**

1. A method of retarding or preventing the gelation of a miscible and pumpable crutcher slurry containing, by weight, from 40 to 70% of solids and 60 to 30% of water, of which solids content, on a 100% solids basis, 55 to 85% is sodium bicarbonate, 5 to 20% is sodium carbonate and 5 to 25% is sodium silicate of Na_2O:SiO_2 ratio within the range of 1:1.6 to 1:3, with the ratio of sodium bicarbonate:sodium carbonate being within the range of 2:1 to 8:1 and the ratio of sodium carbonate:sodium silicate being within the range of 1:3 to 3:1, which comprises preparing at a temperature in the range of 40° C. to 70° C. a crutcher slurry of the described composition containing a gelation preventing proportion, from 0.1 to 2%, of a material selected from the group consisting of citric acid, water soluble citrates and mixtures thereof, and mixing such composition in the crutcher during preparation and thereafter.

12. A miscible and pumpable crutcher slurry comprising, by weight from 40 to 70% of solids and 60 to 30% of water, of which solids content, on a 100% solids basis, 55 to 85% is sodium bicarbonate, 5 to 20% is sodium-carbonate and 5 to 25% is sodium silicate of Na_2O:SiO_2 ratio within the range of 1:1.6 to 1:3, with the ratio of sodium bicarbonate:sodium carbonate being within the range of 2:1 to 8:1 and the ratio of sodium carbonate:sodium silicate being within the range of 1:3 to 3:1, and a gelation preventing proportion, from 0.1 to 2%, of a material selected from the group consisting of citric acid, water soluble citrates and mixtures thereof.

4,298,494
SHAMPOO
Michael W. Parslow, Upton by Chester, and Stuart J. Sime, South Wirral, both of England, assignors to Lever Brothers Company, New York, N.Y.
Filed Mar. 14, 1980, Ser. No. 130,298
Claims priority, application United Kingdom, Mar. 27, 1979, 10636/79
Int. Cl.[3] A61K *7/08, 7/06*
U.S. Cl. 252—174.16 **5 Claims**

1. An aqueous shampoo consisting essentially of:

(A) from 5% to 30% by weight of a detergent selected from alkyl sulphate and alkyl ether sulphate detergents;
(B) from 0.05% to 2% by weight of a cationic derivative of a polygalactomannan gum; and
(C) from 0.1% to 3% by weight of an anionic additive comprising at least one of
  (i) a carboxylate of the formula

$$R(OCH_2CH_2)_nCOOM$$

  (ii) a sulphate of the formula
$$ROSO_3M$$

  (iii) a phosphate ester selected from the group consisting of monoesters of the formula

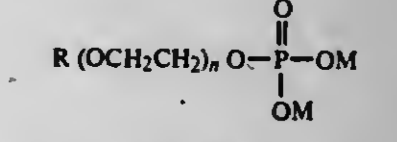

and diesters of the formula

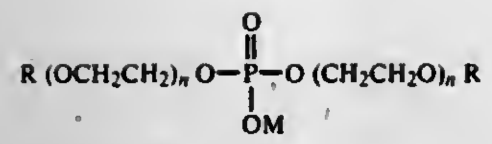

and mixtures thereof
in which formulae R is a hydrocarbon group having 8 to 22 carbon atoms, n is 0 or an integer of from 1 to 10, and M is selected from the group consisting of hydrogen and alkali metal, ammonium and amine salt forming groups, with the proviso that when the anionic additive component (C) is a sulphate the detergent component (A) is an alkyl ether sulphate.

4,298,495
PROCESSES FOR REDUCING THE OXYGEN CONTENT OF METAL OXIDES
Robin H. James, Burghfield Common, and James A. Spooner, Reading, both of England, assignors to United Kingdom Atomic Energy Authority, London, England
Filed Dec. 29, 1977, Ser. No. 865,588
Claims priority, application United Kingdom, Jan. 6, 1977, 379/77
Int. Cl.³ G21C *3/62, 21/00*
U.S. Cl. 252—643 **3 Claims**

1. A process for reducing the oxygen content of metal oxide material by contacting the material with a hydrogen-containing gas at an elevated temperature and removing water formed during said reduction which comprises locating said material in each of a plurality of carbon crucibles having apertured ends but being otherwise closed, the interior walls of each of said carbon crucibles being provided with a layer selected from molybdenum, tungsten and uranium carbide, moving the crucibles in end-to-end contact through a heated zone and thereby forming a duct, passing hydrogen-containing gas through said duct countercurrent to the direction of movement of the crucibles through the heated zone to reduce the oxygen content of said material, said layer reducing reaction between said material and the carbon of the crucible but not preventing reaction between water formed during said reduction and the carbon of the crucible.

4,298,496
HIGHLY STABLE AEROSOL GENERATOR
Henry S. DeFord, and Mark L. Clark, both of Kennewick, Wash., assignors to The United States of America as represented by the United States Department of Energy, Washington, D.C.
Filed Sep. 19, 1980, Ser. No. 188,435
Int. Cl.³ B01F *3/04*
U.S. Cl. 252—359 A **4 Claims**

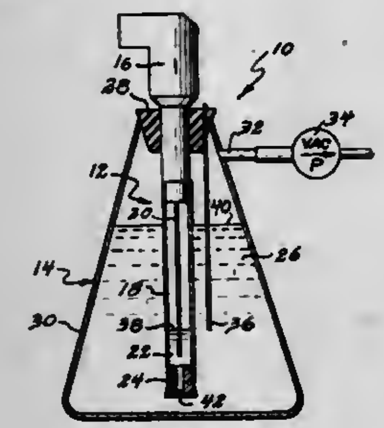

1. An aerosol spray device comprising, an aspirating assembly, a makeup assembly capable of containing a makeup solution and capable of being vacuum sealed, a vacuum pressure means attached to said makeup assembly and capable of introducing a vacuum into said makeup assembly, an interconnection means for coupling said aspirating assembly and said makeup assembly, said interconnection means capable of allowing communication between solutions introduced into said aspirating assembly and said makeup assembly and a vent tube open at each end with one end in communication with the atmosphere and the other end of said vent tube in communication with the inside of said makeup assembly capable of containing a makeup solution.

4,298,497
COMPOSITION FOR PREVENTING COLD END CORROSION IN BOILERS
Paul T. Colombo, Downers Grove, Ill., assignor to Nalco Chemical Company, Oak Brook, Ill.
Filed Jan. 21, 1980, Ser. No. 113,545
Int. Cl.³ C10L *10/04;* **C23F** *11/02, 11/18*
U.S. Cl. 252—387 **10 Claims**

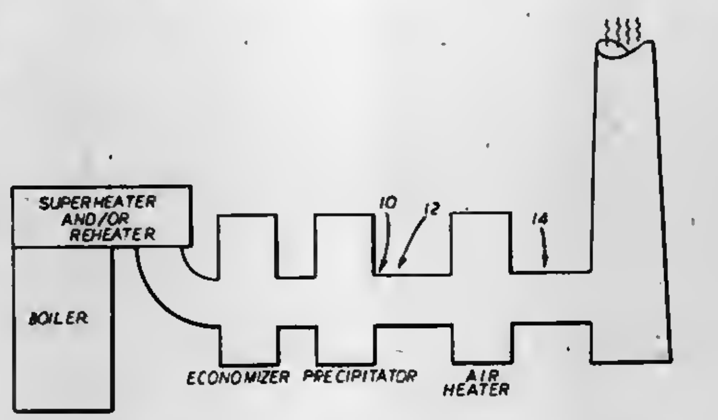

1. A composition for neutralizing acid corrosive agents in a flowing vapor medium, said composition comprising: a particulate carrier comprising a colloidal hydrated aluminum silicate; and a particulate, active neutralizing agent having a relatively small surface area surface-coated on said carrier.

4,298,498
CONTROL REAGENT FOR TEST STRIPS FOR DETERMINING UROBILINOGEN IN URINE
Helmut Rehner, Weilheim, and Walter Rittersdorf, Mannheim-Waldhof, both of Fed. Rep. of Germany, assignors to Boehringer Mannheim GmbH, Mannheim Waldhof, Fed. Rep. of Germany
Filed Dec. 13, 1979, Ser. No. 103,025
Claims priority, application Fed. Rep. of Germany, Dec. 21, 1978, 2855363
Int. Cl.³ C09K *3/00;* **G01N** *33/48*
U.S. Cl. 252—408 **14 Claims**

1. An artificial human urine control reagent for analytical test strips used in analyzing human urine, comprising a mixture of a component selected from 2, 4-dimethylpyrrole-3-carboxylic acid, alkali metal salts thereof and alkaline earth metal salts thereof as a substitute for naturally occurring urobilinogen in human urine and at least one other component which is or simulates a diagnostically relevant component of human urine, the ratio of urobilinogen substitute to said other at least one component simulating conditions naturally occurring in human urine.

4,298,499
RECOVERY OF CATALYSTS
Tamotsu Imai, Mt. Prospect, Ill., assignor to UOP Inc., Des Plaines, Ill.
Filed Jul. 14, 1980, Ser. No. 167,947
Int. Cl.³ B01J *31/40, 31/18;* **C07C** *27/22;* **C01G** *55/00*
U.S. Cl. 252—414 **16 Claims**

1. In a process for the recovery of trace amounts of a Group VIII metallic catalyst from a hydroformylation reaction product consisting essentially of an alcohol derived from hydroformylation of an olefinic hydrocarbon with carbon monoxide and hydrogen at hydroformylation conditions in the presence of a Group VIII metal catalyst and a monoamine modifier, the improvement which comprises, after hydroformylation, contacting at a temperature in the range of from about 20° to about 300° C. and a pressure in the range of from about 1 atmosphere to about 200 atmospheres said hydroformylation reaction product consisting essentially of an alcohol with a biphyllic ligand compound selected from the group consisting of arsenic, nitrogen, oxygen, phosphorous, sulfur, tellurium, antimony, germanium and tin compounds capable of forming a soluble and stable complex with said Group VIII metallic catalyst to separate and recover said trace amounts of Group VIII metallic catalyst.

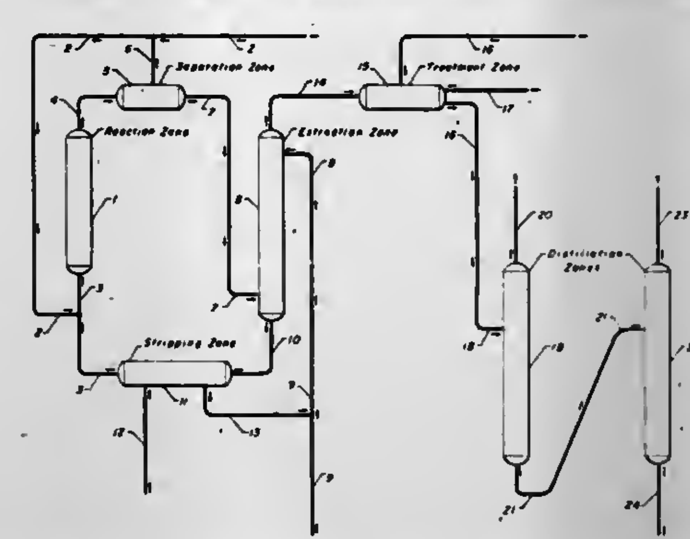

7. The process as set forth in claim 1 in which said biphyllic ligand capable of forming a soluble complex with a Group VIII metallic catalyst comprises bis(1,2-diphenylphosphino)ethane.

8. The process as set forth in claim 1 in which said biphyllic ligand capable of forming a soluble complex with a Group VIII metallic catalyst comprises methyldiphenylarsine.

4,298,500
MIXED PHASE CHROMATOGRAPHIC COMPOSITIONS
Seth R. Abbott, Concord, Calif., assignor to Varian Associates, Inc., Palo Alto, Calif.
Filed May 5, 1980, Ser. No. 146,711
Int. Cl.³ B01D *15/08*
U.S. Cl. 252—428 **38 Claims**

1. A mixed phase composition comprising a porous particle suitable for use in chromatography having a first residue covalently bonded, to less than the maximum number of sterically available support matrix active sites, said first residue being capable of separating multiple-sorbable-sited compounds, said particle also having a second residue covalently bonded to other of the sterically available support matrix active sites, said second residue being inert or substantially inert to said compounds; said first and second residues being directly attached to said active sites.

4,298,501
TECHNIQUE TO REDUCE THE ZEOLITE MOLECULAR SIEVE SOLUBILITY IN AN AQUEOUS SYSTEM
Santi Kulprathipanja, Hoffman Estates, Ill., assignor to UOP Inc., Des Plaines, Ill.
Continuation-in-part of Ser. No. 48,955, Jun. 15, 1979, Pat. No. 4,248,737. This application Oct. 30, 1980, Ser. No. 202,047
Int. Cl.³ B01J *20/18, 20/22*
U.S. Cl. 252—430 **12 Claims**

1. A method for the manufacture of an adsorbent comprising zeolitic crystalline aluminosilicate and a water permeable organic polymer binder suitable for use in a process for the separation of a component from a feed mixture comprising an aqueous solution of a mixture of components, which method comprises:
(a) mixing together a powder of said crystalline aluminosilicate, a powder of said binder and acetic acid solvent to form a malleable mixture;
(b) forming said malleable mixture into discrete formations;
(c) removing said solvent from said formations to obtain hard dry formations; and
(d) breaking said hard dry formations into particles of desired sizes.

7. The method of claim 1 further characterized in that said water permeable organic polymer comprises a cellulose ester or cellulose nitrate.

8. The method of claim 1 further characterized in that said crystalline aluminosilicate is selected from the group consisting of X zeolites and Y zeolites.

4,298,502
CATALYTIC COMPOSITE PARTICULARLY USEFUL FOR THE OXIDATION OF MERCAPTANS AND THE REMOVAL OF GUMS CONTAINED IN A SOUR PETROLEUM DISTILLATE
David H. J. Carlson, Park Ridge, Ill., assignor to UOP Inc., Des Plaines, Ill.
Continuation-in-part of Ser. No. 143,119, Apr. 23, 1980, which is a continuation of Ser. No. 958,303, Nov. 6, 1978, Pat. No. 4,206,043. This application Dec. 10, 1980, Ser. No. 214,856
Int. Cl.³ B01J *31/08, 31/22*
U.S. Cl. 252—431 N **11 Claims**

1. A regeneratable, gum resistant catalytic composite for sweetening a sour petroleum distillate, prepared by the method comprising:
(a) washing a basic anion exchange resin with an alcohol;
(b) contacting said basic anion exchange resin with an aqueous caustic solution of a metal phthalocyanine mercaptan oxidation catalyst to produce a catalyst-impregnated basic anion exchange resin; and
(c) drying said catalyst-impregnated basic anion exchange resin.

4,298,503
METHOD OF PREPARING CALCIUM BORON PHOSPHATE CATALYST
Oleg E. Batalin, ulitsa Ordzhonikidze, 45, kv. 85; Arkady S. Dykman, ulitsa Leni Golikova, 37, korpus 4, kv. 15; Alexandr I. Osadchenko, ulitsa Sofiiskaya, 23, korpus 2, kv. 174; Galina F. Balkhanova, ulitsa Telmana, 48, korpus 3, kv. 60, all of Leningrad; Izrail M. Belgorodsky, Molodezhny bulvar, 50, kv. 25, Tolyatti; Vladimir I. Nevstruev, ulitsa Karla Marxa, 52, kv. 31, Tolyatti; Valery A. Radionov, ulitsa Matrosova, 30, kv. 180, Tolyatti; Eduard A. Tulchinsky, ulitsa Ushakova, 46, kv. 12, Tolyatti; Valentin M. Belyaev, prospekt Lenina, 32, kv. 20, Volzhsky; Jury I. Smolin, ulitsa Lenina, 97, kv. 494, Volzhsky; Mark I. Breiman, ulitsa Chaikovskogo, 17, kv. 12, Volzhsky; Vitaly V. Orlyansky, ulitsa Pionerskaya, 8a, kv. 4, Volzhsky; Nikolai Y. Zhirnov, ulitsa Sovetskaya, 59, kv. 35, Volzhsky; Nikolai V. Galibin, ulitsa Pushkina, 122, kv. 49, Volzhsky; Adrian P. Troitsky, ulitsa Miklukho-Maklaya, 65, korpus 2, kv. 48, Moscow, and Vladimir V. Kovalenko, ulitsa Tsiolkovskogo, 7/2, kv. 38, Voronezh, all of U.S.S.R.
Filed Mar. 24, 1980, Ser. No. 133,647
Int. Cl.³ B01J *37/02, 21/02*
U.S. Cl. 252—432 **8 Claims**

1. Method of preparing a calcium boron phosphate catalyst, which comprises reacting a calcium salt with a phosphoric acid salt in aqueous ammonia, thereby forming a reaction mixture including a precipitate, separating the thus formed precipitate from the reaction mixture, shaping said precipitate to a predetermined shape drying the thus shaped precipitate, and heat treating the shaped, dried precipitate at an elevated temperature in the presence of steam or steam with an inert gas, said steam or steam with inert gas being mixed with at least one of the components selected from the group consisting of boric acid and a mixture of boric and phosphoric acids, thereby forming a shaped calcium boron phosphate catalyst.

4,298,504

ATTENUATED SUPERACTIVE MULTIMETALLIC CATALYTIC COMPOSITE

George J. Antos, Bartlett, Ill., assignor to UOP Inc., Des Plaines, Ill.

Division of Ser. No. 970,049, Dec. 15, 1978, Pat. No. 4,235,705, which is a continuation-in-part of Ser. No. 833,332, Sep. 14, 1977, Pat. No. 4,165,276. This application Jun. 18, 1980, Ser. No. 166,214

The portion of the term of this patent subsequent to Jun. 12, 1996, has been disclaimed.

Int. Cl.³ B01J *27/08, 27/10, 23/64*

U.S. Cl. 252—441 **18 Claims**

1. A catalytic composite comprising a combination of a catalytically effective amount of a pyrolyzed rhenium carbonyl component with a porous carrier material containing a uniform dispersion of catalytically effective amounts of a platinum group component, which is maintained in the elemental metallic state during the incorporation of the rhenium carbonyl component, and of a bismuth component.

4,298,505

RESISTOR COMPOSITION AND METHOD OF MANUFACTURE THEREOF

William G. Dorfeld, Lindley, and Robert J. Settzo, Painted Post, both of N.Y., assignors to Corning Glass Works, Corning, N.Y.

Filed Nov. 5, 1979, Ser. No. 91,375

Int. Cl.³ H01B *1/06*

U.S. Cl. 252—513 **14 Claims**

1. A resistor having improved stability and temperature coefficient of resistance consisting essentially of nickel, chromium and silicon, the concentration by weight of each being in the ranges specified by the polygon AB, BD, DC, CA as shown in the drawing.

4,298,506

METHOD OF TREATING SILVER OXIDE POWDER AND THE PRODUCT FORMED THEREFROM

Franciszek J. Przybyla, Mississauga, and Eleanor J. Rossler, Lorne Park, both of Canada, assignors to Duracell International Inc., Bethel, Conn.

Filed Nov. 3, 1978, Ser. No. 957,598

Int. Cl.³ H01B *1/06*

U.S. Cl. 252—518 **14 Claims**

1. A process for producing silver oxide for use in the cathode of an alkaline silver oxide galvanic cell, including the steps of partially reducing a mixture having at least 10% divalent silver oxide powder, the remainder including at least a minor amount of monovalent silver oxide powder, by reacting said silver oxide powder mixture with a surfactant and removing the reagent from the reacted silver oxide powder mixture.

4,298,507

FLEXIBLE MARKING COMPOSITION FOR PENCILS

Roque O. L. Leon, Buenavista No. 46, Mexico 14, D. F., Mexico

Filed Jun. 16, 1980, Ser. No. 159,936

Claims priority, application Mexico, Mar. 11, 1980, 181502

Int. Cl.³ C09D *13/00*

U.S. Cl. 260—4 AR **10 Claims**

1. A flexible marking composition comprising a vulcanized slurry including by weight about 15-22% elastomer selected from the group consisting essentially of natural rubber and synthetic rubber, about 3-9% plasticizers selected to include at least in part cumarone resin, about 2% vulcanizing agent, about 45-65% pigment, about 1-3% vulcanizing activator and accelerator, and about 10% desiccant for sequestrating moisture from the slurry and for inhibiting gas generation during vulcanizing, and the balance pigment carrier.

4,298,508

POLYMER CURING SYSTEM, AIR-CURABLE COMPOSITION AND METHOD OF PREPARING THE COMPOSITION

Charles M. Lamb, III, Bartlesville, Okla., assignor to Phillips Petroleum Company, Bartlesville, Okla.

Division of Ser. No. 954,037, Oct. 23, 1978, Pat. No. 4,224,200. This application Jun. 12, 1980, Ser. No. 158,767

The portion of the term of this patent subsequent to Sep. 23, 1997, has been disclaimed.

Int. Cl.³ C08L *91/00*

U.S. Cl. 260—18 R **41 Claims**

1. A method comprising combining at least one type A compound and at least one type B compound,

wherein said at least one type A compound is represented by the formula

$$(Z-\overset{S}{\overset{\|}{C}}-S)_x-M,$$

wherein M is selected from the group consisting of metals in groups IA, IB, IIA, IVA, VA, and VIA of the periodic table,

wherein x is an integer between 1 and 4, inclusive, and

wherein Z is selected from the group consisting of

(1) an amino group having the formula $H_2N—$,

(2) a disubstituted amino group having the formula RR'N—,

(3) a monosubstituted amino group having the formula HRN—, and

(4) a heterocyclic amino group,

wherein R and R' can be the same or different and each comprises a hydrocarbyl group having from 1 to about 18 carbon atoms, and

wherein said at least one type B compound is selected from the group consisting of Group VIIB metal compounds of carboxylic acids, Group VIII metal compounds of carboxylic acids, Group VIIB metal compounds of beta diketones, and Group VIII metal compounds of beta diketones.

4,298,509

NONINFLAMMABLE OLEFIN FIBERS AND METHOD OF PRODUCING SAME

Antonio Fochesato, Via Romana Rompato 19, Schio (Vicenza), Italy

Continuation-in-part of Ser. No. 864,459, Dec. 27, 1977, Pat. No. 4,193,911. This application Sep. 12, 1979, Ser. No. 74,903

Claims priority, application Italy, Oct. 5, 1977, 85639 A/77

Int. Cl.³ C08K *3/22, 3/32, 5/02, 5/06*

U.S. Cl. 260—29.1 SB **29 Claims**

1. Noninflammable olefinic-resin fibers, which fibers contain in combination as fire-retardant agents:

(a) from about 0.5% to 15% by weight of a hydrated alumina, which alumina has been treated to permit the alumina to be incorporated into the olefinic-resin composition from which the fibers are produced;

(b) from about 0.5% to 8.0% by weight of a halogenated organic compound selected from the group consisting of
(i) a polyhalo cyclohexane, and
(ii) a polyhalo diphenyl oxide;

(c) from about 0.5% to 8.0% by weight of ammonium polyphosphate; and

(d) the olefinic fibers being noninflammable when tested by ASTM-D635-74.

4,298,510

HARDENABLE RESIN COMPOSITIONS

John Cooper, West Kilbride, Scotland, assignor to Imperial Chemical Industries Limited, London, England

Continuation of Ser. No. 565,701, Apr. 7, 1975, abandoned. This application Feb. 22, 1977, Ser. No. 770,431

Claims priority, application United Kingdom, Apr. 23, 1974, 17673/74

Int. Cl.³ C08L *67/00*

U.S. Cl. 260—29.2 E **25 Claims**

1. A method of increasing the gelling and setting rate of a polymerisation hardenable liquid resin composition comprising polymerising the resin with the aid of a hardening catalyst in the presence of two or more additional substances which are reacted together in admixture with the resin composition to produce sufficient heat to increase the rate of hardening, said additional substances constituting 5% to 30% by weight of the total composition.

8. A method as claimed in claim 1 wherein the polymerisation hardenable resin comprises polyester resin.

4,298,511

URETHANE RHEOLOGY MODIFIERS AND COMPOSITIONS CONTAINING SAME

Karl F. Schimmel, Verona; Jerome A. Seiner, Pittsburgh; Rostyslaw Dowbenko, and Roger M. Christenson, both of Gibsonia, all of Pa., assignors to PPG Industries, Inc., Pittsburgh, Pa.

Filed Aug. 1, 1980, Ser. No. 174,479

Int. Cl.³ C08G *18/48*

U.S. Cl. 260—29.2 TN **44 Claims**

1. A urethane rheology modifier characterized in having a branched structure, substantially no terminal hydrophobic groups and capable of modifying the rheology properties of water-based and organic solvent-based compositions, derived from the reaction of (a) for each from about 8 moles to about 14 moles of a polyalkylene oxide having a molecular weight of from about 2,000 to about 20,000; (b) from about 0.5 moles to about 5 moles of a polyfunctional material; (c) from about 9 moles to about 90 moles of a diisocyanate; and (d) from about 3 moles to about 70 moles water.

4,298,512

UREA FORMALDEHYDE DISPERSIONS MODIFIED WITH HIGHER ALDEHYDES

Paul Sartoretto, North Brunswick, and Kak-Yuen Tso, Highland Park, both of N.J., assignors to W. A. Cleary Chemical Corporation, Somerset, N.J.

Filed Apr. 24, 1980, Ser. No. 143,367

Int. Cl.³ C08L *61/24*

U.S. Cl. 260—29.4 R **24 Claims**

1. A process for preparing a dispersion of a urea aldehyde polymer which comprises:

(a) reacting urea with formaldehyde and a higher aldehyde having from 2 to 4 carbon atoms, wherein the mole ratio of formaldehyde to said higher aldehyde is at least 2:1, in aqueous medium in the presence of an acid catalyst to form a dispersion of urea aldehyde polymer in said aqueous medium; and

(b) neutralizing said dispersion.

4,298,513

BINDER FOR PAPER-COATING COMPOSITIONS

Dieter Distler, Mutterstadt; Margarete Mueller; Hans-Georg Bubam, both of Ludwigshafen, and Guenther Addicks, Ludwigshafen, all of Fed. Rep. of Germany, assignors to BASF Aktiengesellschaft, Ludwigshafen, Fed. Rep. of Germany

Filed Sep. 15, 1980, Ser. No. 186,844

Claims priority, application Fed. Rep. of Germany, Sep. 29, 1979, 2939657

Int. Cl.³ C08L *33/02*

U.S. Cl. 260—29.7 H **9 Claims**

1. An aqueous dispersion of a butadiene-styrene copolymer which comprises:

(a) from 25 to 57.5% by weight of a mixture of butadiene and copolymerized units of an acrylic acid ester of an alcohol of 1 to 4 carbon atoms, said mixture not being less than 15% by weight of butadiene units,

(b) from 40 to 70% by weight of styrene,

(c) from 1 to 5% by weight of maleic acid or maleic anhydride and

(d) from 1.5 to 7% by weight of methacrylamide, as copolymerized units.

4,298,514

FLAME RETARDANT THERMOPLASTIC POLYPHENYLENE ETHER RESIN COMPOSITIONS

Gim F. Lee, Jr., Albany, N.Y., assignor to General Electric Company, Pittsfield, Mass.

Division of Ser. No. 671,342, Mar. 29, 1976, Pat. No. 4,203,931. This application Oct. 22, 1979, Ser. No. 87,163

Int. Cl.³ C08K *5/10, 5/54;* **C08L** *83/12*

U.S. Cl. 260—29.1 SB **17 Claims**

1. A self-extinguishing, non-dripping thermoplastic molding composition which comprises:

(i) a polyphenylene ether resin;

(ii) a styrene resin;

(iii) a halogenated aromatic flame retardant compound;

(iv) an antimony containing compound; and

(v) an additive selected from the group consisting of alkyl esters of trimellitic acid, epoxy stearates, epoxy tetrahydrophthalates, diorganopolysiloxane fluids, alkyl esters of adipic acid, alkyl esters of glycolic acid and dialkyl phthalates.

4,298,515

PROCESS FOR THE PREPARATION OF POLYMERS CONTAINING HYDANTOIN GROUPS

Jürgen Lewalter; Ludwig Rottmaier, both of Odenthal; Rudolf Merten, Leverkusen; Wilfried Zecher, Leverkusen; Willi Dünwald, Leverkusen, and Bernhard Schulte, Krefeld, all of Fed. Rep. of Germany, assignors to Bayer Aktiengesellschaft, Leverkusen, Fed. Rep. of Germany

Filed Dec. 6, 1979, Ser. No. 100,870

Claims priority, application Fed. Rep. of Germany, Dec. 16, 1978, 2854383

The portion of the term of this patent subsequent to May 26, 1998, has been disclaimed.

Int. Cl.³ C08G *18/06*

U.S. Cl. 260—30.4 N **10 Claims**

1. A process for the preparation of poly(thio) hydantoins containing amidoimide groups comprising reacting a polyfunctional α-aminocarboxylic acid, amide or ester with organic polyiso(thio)cyanates wherein the reaction is carried out in a lactone solvent with the addition of a carboxylic acid anhydride of the formula

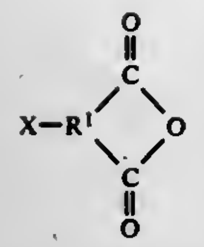

wherein R^1 is a C_2–C_{10} aliphatic moiety, a C_5–C_{10} cycloaliphatic moiety of a C_6–C_{20} aromatic moiety, and X is another cyclic anhydride moiety, a carboxyl or a hydroxyl.

4,298,516
COMPOSITION OF MATTER

Lynn J. Taylor, Haslett, Mich., and John D. Grier, Toledo, Ohio, assignors to Owens-Illinois, Inc., Toledo, Ohio
Continuation of Ser. No. 302,062, Oct. 30, 1972, abandoned, which is a division of Ser. No. 174,197, Aug. 23, 1971, Pat. No. 4,014,845. This application Oct. 13, 1976, Ser. No. 731,956
Int. Cl.³ C08K *3/40*
U.S. Cl. 260—31.8 R **9 Claims**

1. As a composition of matter a particulate inorganic material dispersed in a fugitive vehicle system, said particulate material having a fusion temperature and said fugitive vehicle system comprising at least two organic components, at least one component being a polymeric material which is a solid at ambient temperature, has a pyrolysis temperature of about 250° C. to about 450° C. and below said fusion temperature of said particulate material and following pyrolysis in a non-oxygen containing environment, leaves no carbonaceous residue having a deleterious effect on said particulate material, said polymeric material having oxygen atoms selectively incorporated in its molecular chain and being at least one pyrolyzable solid polymer or copolymer selected from the group consisting of polyethers, copolymers and terpolymers and quadpolymers of oxygen and at least one monomer of alkyl methacrylate, poly (trimethylene carbonate), poly(beta-propiolactone), poly(delta-valerolactone), poly(ethylene carbonate), poly(propylene carbonate), and poly(ethylene oxalate), and at least one other component being a solvent for dissolving said copolymeric material, said solvent being a liquid at ambient temperature and having a volatilization or decomposition temperature range of about 200° C. to about 350° C., but below the pyrolysis temperature of said polymeric material.

4,298,517
TETRAHALOPHTHALATES AS FLAME RETARDANT PLASTICIZERS FOR HALOGENATED RESINS

Stanley R. Sandler, Springfield, Pa., assignor to Pennwalt Corporation, Philadelphia, Pa.
Continuation-in-part of Ser. No. 972,601, Dec. 22, 1978, abandoned. This application Aug. 23, 1979, Ser. No. 68,987
Int. Cl.³ C08K *5/12;* **C08J** *3/18*
U.S. Cl. 260—31.8 HA **10 Claims**

1. A composition comprising a halogenated resin and a flame and smoke retarding amount of a plasticizer of the structure:

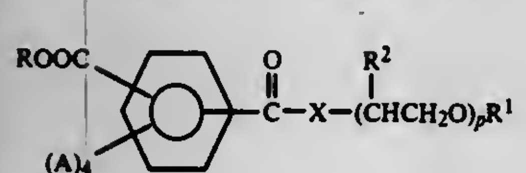

(I)

wherein
(a) the ring can have all possible isomeric arrangements:
(b) R is selected from the group consisting of hydrogen, an alkyl of 1 to 10 carbons, hydroxyalkyl of 2 to 10 carbons, and polyhydroxyalkyl of 3 to 10 carbons;
(c) R^1 is selected from the group consisting of hydrogen, an alkyl or substituted alkyl of 1 to 12 carbons, or

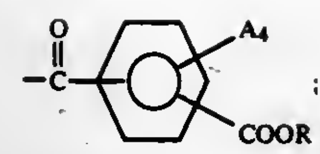

(d) R^2 is independently selected from the class consisting of H and CH_3—;
(e) p is an integer of 4 to 50;
(f) x is selected from O or NH; and
(g) A is selected from Cl or Br.

4,298,518
POLYAMIDE RESIN COMPOSITION

Yasuhiro Ohmura; Yukinobu Murakami, and Ryoji Hidaka, all of Kita-Kyushu, Japan, assignors to Mitsubishi Chemical Industries, Ltd., Tokyo, Japan
Filed Aug. 24, 1977, Ser. No. 827,256
Claims priority, application Japan, Sep. 6, 1976, 51-106530; Feb. 23, 1977, 52-18974; Jul. 6, 1977, 52-40167
Int. Cl.² C08K *5/09, 5/20, 5/34*
U.S. Cl. 260—32.6 NA **6 Claims**

1. A polyamide resin composition which comprises a polyamide resin and from 1 to 20 wt.% of melamine cyanurate.

4,298,519
PLASTICIZER-CONTAINING THERMOCURABLE COMPOSITION

Johan H. Cordes, Naarden, and Wilhelmus F. M. Roes, Beek, both of Netherlands, assignors to Akzo N.V., Arhem, Netherlands
Filed May 30, 1978, Ser. No. 910,539
Int. Cl.³ C08K *5/02;* **C08L** *67/00*
U.S. Cl. 260—33.8 UA **9 Claims**

1. A thermocurable composition based on an ethylenically unsaturated ester having the general formula:

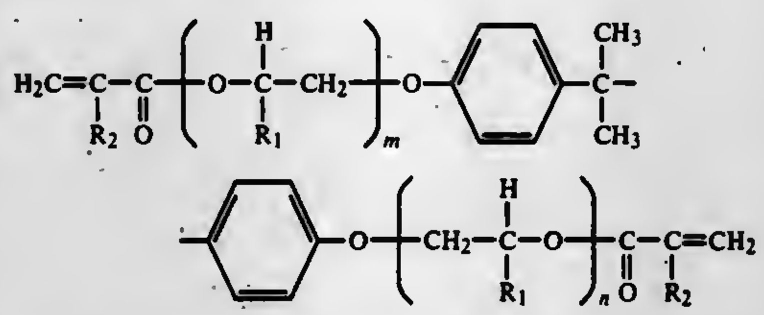

wherein R_1 and R_2 may be the same or different and represent a hydrogen atom or a methyl group, and m and n are numbers whose average is in the range of 1.0 to 3.0, characterized in that the composition contains as a plasticizer 2 to 60% by weight (calculated on the ethylenically unsaturated ester) of a chlorine-containing paraffin having an average molecular weight of 250 to 900 and an average chlorine content of 35 to 75% by weight.

4,298,520
PHENOLIC ESTER SYNTHETIC RESIN STABILIZERS

Motonobu Minagawa, Koshigaya; Yutaka Nakahara, Iwatsuki, and Masayuki Takahashi, Tokorozawa, all of Japan, assignors to Argus Chemical Corp., Brooklyn, N.Y.
Division of Ser. No. 846,721, Oct. 31, 1977, Pat. No. 4,171,298. This application Oct. 11, 1979, Ser. No. 83,789
Claims priority, application Japan, Nov. 1, 1976, 51-13162
Int. Cl.³ C08K *5/53, 5/52;* **C07C** *39/17, 39/06;* **C07D** *251/34*
U.S. Cl. 260—45.8 R **41 Claims**

1. An ortho-alkylhydroxybenzylpropane-1,3-diol compound having the formula

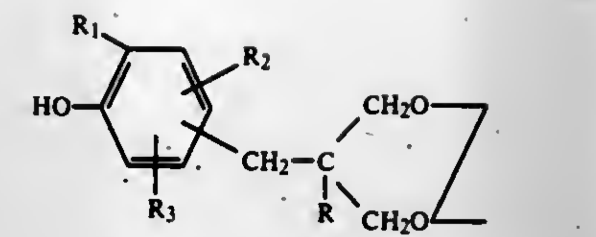

in which R_1 is an alkyl group having 1 to 8 carbon atoms, R_2 and R_3 are hydrogen or alkyl groups having 1 to 8 carbon atoms, R is hydrogen, an alkyl group having 1 to 8 carbon atoms, an alkenyl group having 2 to 8 carbon atoms, or an ortho-alkylhydroxybenzyl group

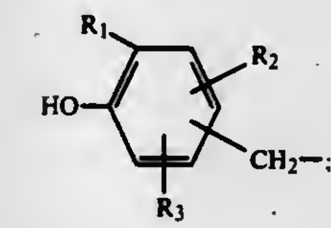

and Z is selected from the group consisting of singly linked phosphorus ester groups and double linked phosphorus ester groups taken in sufficient number to satisfy the valences of the two propanediol oxygen atoms; the singly linked phosphorus ester Z groups having the formula

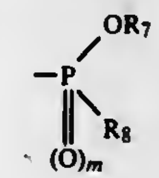

in which m is 0 or 1; R_7 is the residue obtained by reaction of one hydroxyl group of an aliphatic or aromatic compound having 1 to 40 carbon atoms, and 1 to 4 hydroxyl groups; R_8 is —O—R_7, alkyl having 1 to 8 carbon atoms, phenyl, benzyl, or

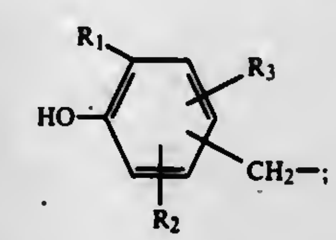

and the doubly linked phosphorus ester Z groups having the formula

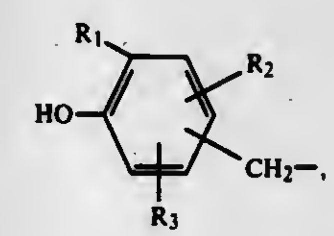

in which m is 0 or 1 and p is 0, 1, 2, or 3; when p is 0 R_6 is alkyl, phenyl, benzyl,

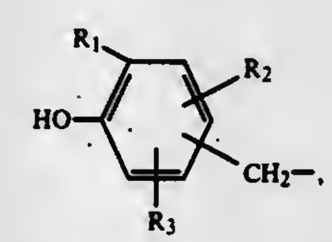

or a residue linked through one oxygen of a monohydric, dihydric, trihydric, or tetrahydric alcohol or phenol having 1 to 40 carbon atoms; and when p is 1, 2, or 3 R_6 is a residue linked through two oxygens of a dihydric, trihydric, or tetrahydric alcohol or phenol having 2 to 40 carbon atoms.

37. A stabilized synthetic resin composition comprising a synthetic resin and 0.01 to 5% by weight of an ortho-alkylhydroxybenzylpropanediol compound according to claim 1.

4,298,521
STABILIZED POLYOLEFIN COMPOSITIONS

John L. H. Allan, Glen Rock; Arnold B. Finestone, Woodcliff Lake, both of N.J., and John J. Roderick, Avon Lake, Ohio, assignors to El Paso Polyolefins Company, Paramus, N.J.
Division of Ser. No. 705,303, Jul. 14, 1976, abandoned. This application Mar. 28, 1979, Ser. No. 24,500
Int. Cl.³ C08L *23/00, 61/20*
U.S. Cl. 260—45.9 R **21 Claims**

1. A mono-α-olefin polymer composition stabilized against copper-activated accelerated oxidative degradation, which comprises:

a mono-α-olefin polymer and from about 0.1 to about 10 percent by weight based on the total weight of the composition of a polymeric compound as the sole copper deactivating agent, which polymeric compound has been prepared by a process comprising

(a) reacting at least one para-substituted phenol of the formula:

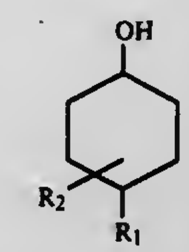

wherein R_1 is a C_3–C_{30} group selected from alkyl, cycloalkyl, alkaryl or aryl and R_2 is either hydrogen, a sulfonic acid group or a sulfonic acid salt group;
with an aldehyde or ketone of the formula:

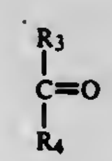

wherein R_3 and R_4 independently from each other can be either hydrogen or a C_1–C_{36} group selected from alkyl, cycloalkyl, alkaryl or aryl,
in a molar ratio of aldehyde or ketone to phenol of at least about 2:1 in the presence of an alkaline catalyst; and

(b) reacting the product of step (a) with ammonia, or an amine of the formula:

$H(NR_6R_5)_nNR_6H$

wherein R_5 is a C_2–C_{20} group selected from alkylene, cycloalkylene, alkarylene or arylene, R_6 is hydrogen or a C_1–C_{36} group selected from alkyl, cycloalkyl, alkaryl or aryl, and n is a number from 0 to 3,
in about a 1:1 molar ratio of ammonia or amine to the phenol used in step (a).

4,298,522

DIPHENYLAMINE DERIVATIVES AND DEGRADATION INHIBITORS FOR RUBBER POLYMERS

Mitsuhiro Tamura, Sagamihara; Tetsuo Ohishi, Tokyo, and Hiroshi Sakurai, Yokohama, all of Japan, assignors to Nippon Zeon Co. Ltd., Tokyo, Japan

Filed Jun. 19, 1980, Ser. No. 160,855
Claims priority, application Japan, Jun. 21, 1979, 54/78599; Jun. 21, 1979, 54/78600
Int. Cl.³ C08K *5/43, 5/18;* **C07C** *143/80, 87/58*
U.S. Cl. 260—45.9 QB **12 Claims**

1. A diphenylamine derivative which is capable of inhibiting degradation of reactive rubbery polymers, said derivative being of the general formula

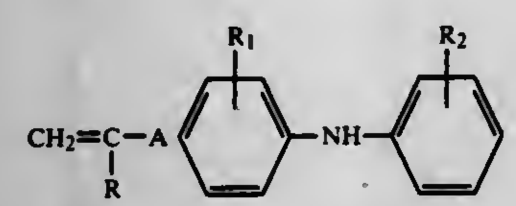

wherein R represents a hydrogen atom or a methyl group, R_1 and R_2, independently from each other, represent a hydrogen atom, a chlorine atom, a bromine atom, or a hydrocarbon radical having 1 to 12 carbon atoms, and A represents

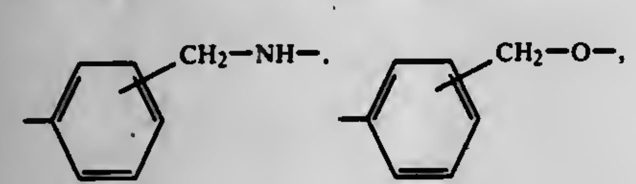

$—SO_2—NH—$, or $—CH_2—SO_2—NH—$.

10. A diene-type rubbery polymer composition comprising 100 parts by weight of a diene-type rubbery polymer and 0.01 to 10 parts by weight of the diphenylamine derivative of claim 1 as a degradation inhibitor.

4,298,523

METHODS AND COMPOSITIONS FOR PREPARATION OF H-ARG-X-Z-Y-TYR-R

George Heavner, Flemington, N.J., assignor to Ortho Pharmaceutical Corporation, Raritan, N.J.

Filed Jun. 17, 1980, Ser. No. 160,241
Int. Cl.³ C07C *103/52*
U.S. Cl. 260—112.5 R **8 Claims**

1. The protected tetrapeptide of formula alpha-T-X-omega-U-Z-Y-TYR-R', wherein:

R' is OU or NH_2;

X is epsilon-T''-LYS and Y is VAL or X and Y are both SAR;

Z is ASP or GLU; and T and T'' are each a member selected from the group consisting of:

(a)

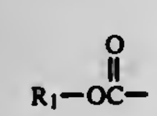

wherein R_1 is phenyl; tolyl; xylyl; adamantyl; allyl; beta-cyanoethyl; fluorenylmethyl; benzyl, benzyl wherein the phenyl ring is substituted with from one to three members selected from halo, nitro, loweralkyl, and loweralkoxy, diisopropylmethyl; diphenylmethyl; cyclohexyl; cyclopentyl; vinyl; t-butyl; t-amyl; dimethyltrifluoromethylmethyl; or dimethylbiphenylmethyl;

(b)

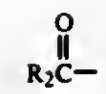

wherein R_2 is loweralkyl of two to four carbons or loweralkyl of one to four carbons substituted with from one to five halo groups;

(c)

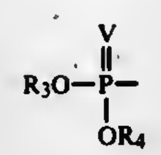

wherein V is S or O and R_3 and R_4 are each benzyl or loweralkyl;

(d)

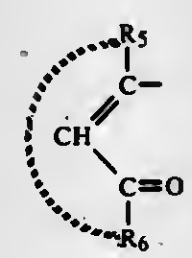

wherein R_5 and R_6 taken individually are each loweralkyl or R_5 and R_6 taken together is

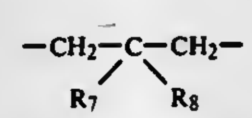

where R_7 and R_8 are each hydrogen or loweralkyl;

(e)

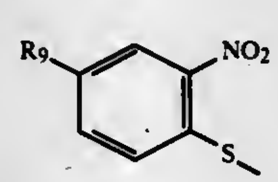

wherein R_9 is hydrogen or nitro; and

(f)

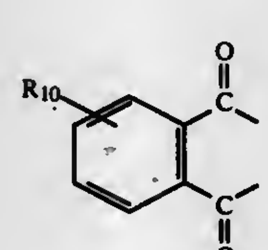

wherein R_{10} is hydrogen, methyl, halo, or nitro provided that T is monodentate when X is SAR; and U is benzyl or benzyl in which the phenyl group is substituted with from one to three members each selected from halo, nitro, C_1–C_3 loweralkyl, and C_1–C_3 loweralkoxy.

4,298,524

PREPARATION OF THION- AND THIOL-CARBAMIC ESTERS

Giancarlo Calcagno, Milan, Italy, assignor to Ligurchim S.r.l., Genoa, Italy

Filed Jan. 10, 1980, Ser. No. 111,109
Claims priority, application Italy, Aug. 6, 1979, 24940 A/79
Int. Cl.³ C07C *155/02;* **C07D** *211/06*
U.S. Cl. 260—239 BF **15 Claims**

1. Method for obtaining thion-carbamic esters, consisting in reacting in a single stage an alkaline xanthogenate, an amine and an oxidizer, according to the reaction:

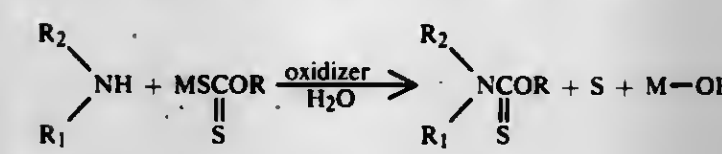

(1)

wherein:

R is a lower alkyl; R_1,R_2 are lower alkyls, cycloparaffinic radicals or R_1 and R_2 together with the nitrogen to which they are attached form a heterocyclic ring;

and

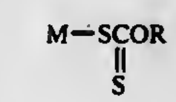

is a xanthogenate, wherein M is a metal.

4,298,525

BIS-INDOLE-ALKALOID

Karola Jovanovics, and Sandor Görög, both of Budapest, Hungary, assignors to Richter Gedeon Vegyeszeti Gyar RT, Budapest, Hungary

Filed Jul. 27, 1979, Ser. No. 61,353
Claims priority, application Hungary, Apr. 23, 1979, RI-708
Int. Cl.³ C07D *519/04*
U.S. Cl. 260—244.4 **1 Claim**

Enclosure 1.
RGH-4451-infrared spectrum

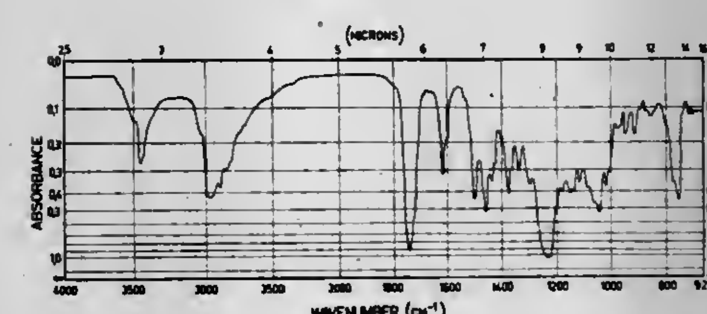

1. A compound RGH-4451 or a pharmaceutically acceptable acid addition salt thereof wherein the compound RGH-4451 has the following characteristics:

melts at 235° C. to 238° C.,

has a specific rotary power of $[\alpha]_D^{25} = +30.5°$, (c=1, chloroform),

has an infrared spectrum illustrated in FIG. 1,

has a ^{1}H-NMR spectrum illustrated in FIG. 2,

has a ^{13}C-NMR spectrum illustrated in FIG. 3, and

has a molecular weight of 854.449

indicating that RGH-4451 differs from vinblastine in containing a $N—CH_2—O—C_2H_5$ group in place of an N-methyl group in the vindoline moiety of the molecule.

4,298,526

PREPARATION OF EASILY DISPERSIBLE AND DEEPLY COLORED PIGMENTARY FORMS

Reinhard Sappok, Heidelberg; Fritz Guellich, Dannstadt-Schauernheim; Karl Roth, Limburgerhof, and Alois Wiesenberger, Lambsheim, all of Fed. Rep. of Germany, assignors to BASF Aktiengesellschaft, Ludwigshafen, Fed. Rep. of Germany

Filed Nov. 16, 1979, Ser. No. 94,984
Claims priority, application Fed. Rep. of Germany, Nov. 30, 1978, 2851752
Int. Cl.³ C09B *47/04*
U.S. Cl. 260—314.5 **9 Claims**

1. In a process for the preparation of an easily dispersible and deeply colored pigmentary form of a phthalocyanine selected from the group consisting of metal-free phthalocyanine, metalized phthalocyanines containing up to 2 chlorine or bromine atoms in the molecule, and polyhalophthalocyanines, by comminuting the crude pigment under shearing stress and impact stress in the absence of milling assistants, converting the milled material to a pigmentary form by recrystallization in organic solvent, and isolating the pigment, the improvement which comprises comminuting the crude pigment in the presence of from 0.5 to 15 percent by weight, based on crude pigment, of one or more acids which have a pK of <4.9 and are non-oxidizing under the milling conditions until the primary particle size is not greater than 0.1 μm.

4,298,527

N-ALKYLTHIO- AND N-ARYLTHIOSULFINYLCARBAMATE ESTERS

Mohamed A. H. Fahmy, and Tetsuo R. Fukuto, both of Riverside, Calif., assignors to The Regents of the University of California, Los Angeles, Calif.

Division of Ser. No. 18,417, Mar. 7, 1979, Pat. No. 4,262,015. This application Oct. 6, 1980, Ser. No. 194,757
Int. Cl.³ C07D *317/44*
U.S. Cl. 260—340.5 R **14 Claims**

1. A method for the preparation of carbamates of the formula:

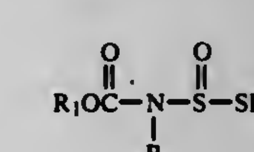

which comprises reacting a compound of the formula

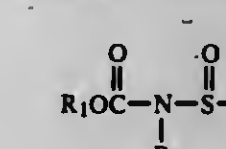

with a compound of the formula R_2SH wherein R is a hydrocarbyl group containing from 1 to 12 carbon atoms; R_1 is selected from the group consisting of a hydrocarbyl group containing from 1 to 20 carbon atoms, a 5 to 6 membered heterocyclic ring containing O or S atoms, and the >C═N— group; and R_2 is a hydrocarbyl group containing from 1 to 20 carbon atoms.

12. The method as defined in claim 1, wherein R_1 is a benzofuranyl or a 1,3-benzodioxolyl group.

4,298,528
CYCLOHEXYL-DIOXANE LIQUID CRYSTALLINE COMPOUNDS
Nicholas L. Sethofer, San Jose, Calif., assignor to Timex Corporation, Waterbury, Conn.
Filed Mar. 28, 1980, Ser. No. 135,381
Int. Cl.^{3} C07D *319/04*
U.S. Cl. 260—340.7 **5 Claims**

1. An elongated, rod-shaped liquid crystalline compound of the formula:

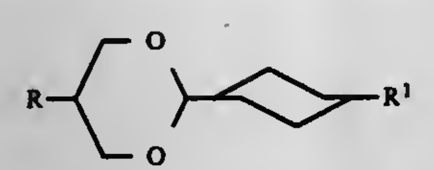

where R and R^1 can be the same or different straight chain alkyl or alkoxy group.

4,298,529
ALKOXYIMINO DIOXY BUTYRIC ACID DERIVATIVES
Ikuo Ueda, Toyonaka; Takao Takaya, Kawanishi; Masakazu Kobayashi, Ikeda; Takashi Masugi, Kiltamachi; Hisashi Takasugi, Kohamanishi; Hiromu Kochi, Sakai, and Tadashi Kitaguchi, Kuknchinishimachi, all of Japan, assignors to Fujisawa Pharmaceutical Co., Ltd., Osaka, Japan
Continuation-in-part of Ser. No. 73,565, Sep. 7, 1979, abandoned. This application Dec. 10, 1979, Ser. No. 101,527
Claims priority, application Japan, Sep. 12, 1978, 53-112555; United Kingdom, Sep. 12, 1978, 36564/78; Japan, Jan. 12, 1979, 54-3106; United Kingdom, Sep. 12, 1978, 36564/78; Feb. 19, 1979, 5791/79
Int. Cl.^{3} C07D *317/28*
U.S. Cl. 260—340.9 R **7 Claims**

1. A new compound of the formula:

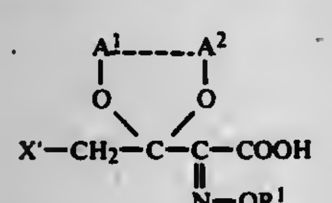
(I)

wherein
R^1 is an aliphatic hydrocarbon group which may have suitable substituent(s),
A^1 and A^2 are each lower alkyl or A^1 and A^2 are linked together to form lower alkylene and
X' is hydrogen or halogen, or its acid halide or its salt.

4,298,530
PROCESS FOR PRODUCTION OF 3-HYDROXY-3-METHYLPHTHALIDE OR THE NUCLEARLY SUBSTITUTED DERIVATIVES THEREOF
Hirokazu Iwasaki, Kawasaki, and Hideo Takahashi, Ebina, both of Japan, assignors to Showa Denko K.K., Tokyo, Japan
Filed Jun. 2, 1980, Ser. No. 155,083
Claims priority, application Japan, Jun. 6, 1979, 54-70153
Int. Cl.^{3} C07D *307/88*
U.S. Cl. 260—343.3 R **8 Claims**

1. In the process for producing 3-hydroxy-3-methylphthalide or its nuclearly substituted derivative of the formula

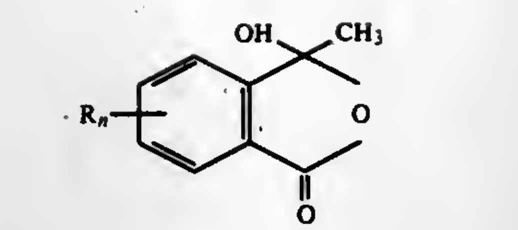
(II)

wherein R represents a lower alkyl group, a lower alkoxy group, a lower alkoxycarbonyl group or a carboxyl group, and n is O or an integer of 1 to 3, by the reaction of phthalic anhydride or its nuclearly substituted derivative of the formula

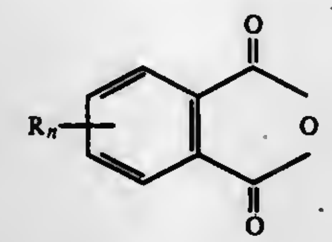

wherein R and n are as defined,
with malonic acid at a temperature of 60° to 130° C., the improvement according to which the reaction is carried out in at least one solvent selected from the group consisting of dialkylformamides, dialkylsulfoxides and aliphatic lower carboxylic acids in the presence of, as a catalyst, a salt of an inorganic or organic acid with a metal selected from the group consisting of metals of Groups IA, IIA, IIIB and VIII of the periodic table, manganese, copper and zinc.

4,298,531
OXIDATION OF BUTADIENE TO FURAN
Richard V. Lindsey, Jr., and William W. Prichard, both of Hockessin, Del., assignors to E. I. Du Pont de Nemours and Company, Wilmington, Del.
Continuation-in-part of Ser. No. 108,820, Dec. 31, 1979, abandoned. This application Dec. 15, 1980, Ser. No. 215,711
Int. Cl.^{3} C07D *307/36*
U.S. Cl. 260—346.11 **15 Claims**

1. Process for preparing furan from 1,3-butadiene, the process comprising contacting the butadiene, at about 65° C. to about 120° C., with a catalyst solution having a pH of 0–2.5 and containing palladium ions and a heteropolyacid having a redox potential greater than 0.5 volt and being of the formula $H_{3+n}PM_{12-n}V_nO_{40}.xH_2O$ wherein M is Mo or W, n is 1–10 and $0<x<32$, to produce furan.

4,298,532
3-NAPHTHYL BENZOFURANS
Robert A. Scherrer, White Bear Lake, and Richard M. Stern, Cottage Grove, both of Minn., assignors to Riker Laboratories, Inc., Northridge, Calif.
Division of Ser. No. 17,590, Mar. 5, 1979, abandoned, which is a division of Ser. No. 943,690, Sep. 19, 1978, Pat. No. 4,154,848, which is a division of Ser. No. 861,893, Dec. 19, 1977, Pat. No. 4,128,659. This application Jan. 21, 1980, Ser. No. 113,644
Int. Cl.^{3} C07D *307/78, 307/79*
U.S. Cl. 260—346.22 **2 Claims**

1. A compound of the formula

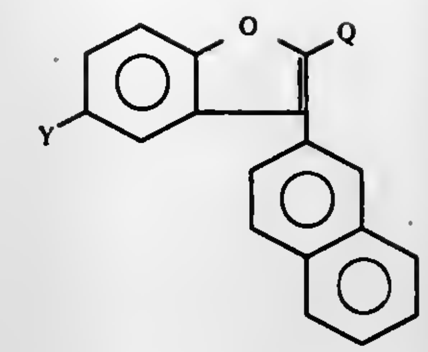

wherein
Q is hydrogen, bromine or iodine and
Y is carboxyl or carboxymethyl.

4,298,533
PRODUCTION OF MALEIC ANHYDRIDE
Koji Moriya, and Itsuo Furuoya, both of Osaka, Japan, assignors to Takeda Chemical Industries, Ltd., Osaka, Japan
Division of Ser. No. 560,802, Mar. 21, 1975, Pat. No. 4,108,874. This application Jun. 13, 1978, Ser. No. 915,301
Claims priority, application Japan, Apr. 9, 1974, 49-40566; May 22, 1974, 49-58117
Int. Cl.^{3} C07D *307/60*
U.S. Cl. 260—346.75 **5 Claims**

1. In a method for producing maleic anhydride by oxidation of a hydrocarbon having not less than four carbon atoms in gaseous phase in the presence of a catalyst, the improvement wherein the catalyst comprises (a) vanadium oxide, (b) phosphorus oxide, (c) an alkaline earth metal oxide selected from the group consisting of beryllium oxide, strontium oxide and barium oxide, and (d) thallium oxide, said catalyst optionally further containing (e) iron oxide, the amount of vanadium oxide relative to phosphorus oxide being from about 1:1 to about 1:5 based on the atomic ratio of vanadium to phosphorus, the amount of vanadium oxide relative to said alkaline earth metal oxide being from about 1:5 to about 15:1 based on the atomic ratio of vandium to the alkaline earth metal, the amount of vanadium oxide relative to thallium oxide being from about 1:2 to about 20:1 based on the atomic ratio of vanadium to thallium, the amount of vanadium oxide relative to iron oxide, when used, being from about 1:2 to about 20:1 based on the atomic ratio of vanadium to iron.

5. In a method for producing maleic anhydride by oxidation of a hydrocarbon having not less than four carbon atoms in gaseous phase in the presence of a catalyst, the improvement wherein the catalyst consists essentially of (a) vanadium oxide, (b) phosphorus oxide, (c) an alkaline earth metal oxide selected from the group consisting of beryllium oxide, strontium oxide and barium oxide, and (d) iron oxide, the amount of vanadium oxide relative to phosphorus oxide being from about 1:1 to about 1:5 based on the atomic ratio of vandium to phosphorus, the amount of vanadium oxide relative to said alkaline earth metal oxide being from about 1:5 to about 15:1 based on the atomic ratio of vanadium to the alkaline earth metal, the amount of vanadium oxide relative to iron oxide being from about 1:2 to about 20:1 based on the atomic ratio of vanadium to iron.

4,298,534
PREPARATION OF BRILLIANT, TRANSPARENT PIGMENTARY BROMO-ISOVIOLANTHRONE OF HIGH TINCTORIAL STRENGTH
Helmut Hoch, Wachenheim; Erwin Hahn, Heidelberg, and Heinrich Hiller, Wachenheim, all of Fed. Rep. of Germany, assignors to BASF Aktiengesellschaft, Ludwigshafen, Fed. Rep. of Germany
Filed Mar. 4, 1980, Ser. No. 127,148
Claims priority, application Fed. Rep. of Germany, Mar. 12, 1979, 2909568
Int. Cl.^{3} C09B *3/22*
U.S. Cl. 260—358 **11 Claims**

1. A process for the preparation of a bromoisoviolanthrone pigment, in the α-modification, having high tinctorial strength, comprising: oxidizing leuco-bromoisoviolanthrone suspended in an aqueous alkaline medium containing a surfactant at a temperature of 10° to 100° C. while subjecting said leuco-bromoisoviolanthrone to shearing forces; and isolating the oxidized pigment.

4,298,535
ANTHRACYCLINONES
Pierre Vogel, and Pierre-Alain Carrupt, both of Lausanne, Switzerland, assignors to Hoffmann-La Roche Inc., Nutley, N.J.
Division of Ser. No. 139,532, Apr. 11, 1980, Pat. No. 4,264,510. This application Oct. 20, 1980, Ser. No. 198,498
Claims priority, application Switzerland, Apr. 20, 1979, 3751/79; Jan. 31, 1980, 783/80
Int. Cl.^{3} C07C *50/16, 69/76, 50/22, 69/74*
U.S. Cl. 260—365 **7 Claims**

1. A compound of the formula

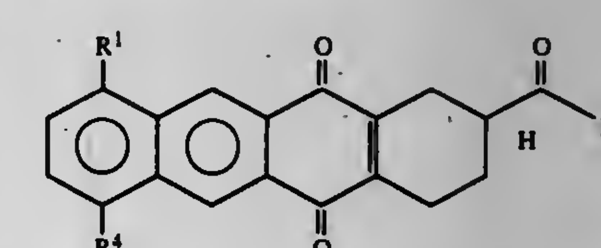

wherein R^1 represents a hydrogen atom or a hydroxy or methoxy group, R^2 represents a methyl or lower alkoxy group and R^4 represents a hydrogen atom or a hydroxy, methoxy or benzyloxy group with the proviso that R^1 and R^4 do not simultaneously represent a hydrogen atom.

4,298,536
PROCESS FOR THE MANUFACTURE OF 1,2-DIAMINOANTHRAQUINONE
Athanassios Tzikas, Pratteln, Switzerland, assignor to Ciba-Geigy Ag, Basel, Switzerland
Filed Apr. 26, 1979, Ser. No. 33,404
Claims priority, application Switzerland, Apr. 28, 1978, 46508/78
Int. Cl.^{3} C07C *97/24*
U.S. Cl. 260—378 **7 Claims**

1. A process for the manufacture of 1,2-diaminoanthraquinone, which comprises reacting 1-nitro-2-acetylaminoanthraquinone with hydrazine or hydroxylamine, or with derivatives thereof, in protic solvents.

4,298,537

PROCESS FOR PRODUCING STEROID COMPOUNDS HAVING AN OXO GROUP IN THE SIDE CHAIN

Osamu Nishikawa; Kenji Ishimaru, both of Iwakuni; Toru Takeshita, Hino, and Hideki Tsuruta, Iwakuni, all of Japan, assignors to Teijin Limited, Osaka, Japan

Filed Nov. 28, 1979, Ser. No. 97,980

Claims priority, application Japan, Nov. 30, 1978, 53-147232

Int. Cl.^{3} C07J *9/00*

U.S. Cl. 260—397.2 **13 Claims**

1. A process for producing a steriod compound having an oxo group in the side chain and expressed by the formula

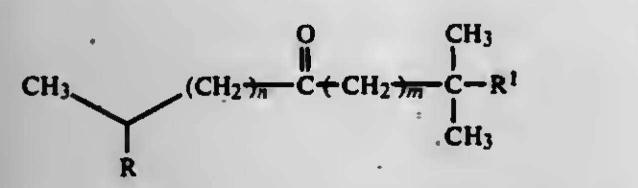

[I]

wherein R represents a steroid skeleton expressed by the following formula

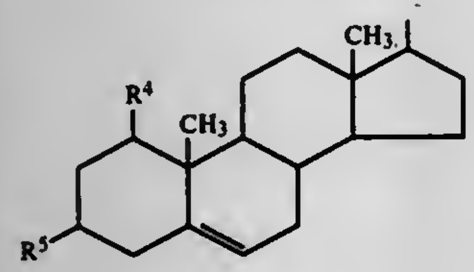

(a)

wherein R^4 represents a hydrogen atom or a protected hydroxyl group, R^5 represents a protected hydroxyl group, or a steroid skeleton having a hydroxyl group or groups derived from a steroid skeleton of above formula (a) by means of hydrolysis, R^1 represents a hydrogen atom, a hydroxyl group or a hydroxyl group protected as an ether group, and n and m, independently from each other, represent O or an integer 1 to 4, provided that when m is O, R^1 is a hydrogen atom, which comprises condensing an acid halide of the formula

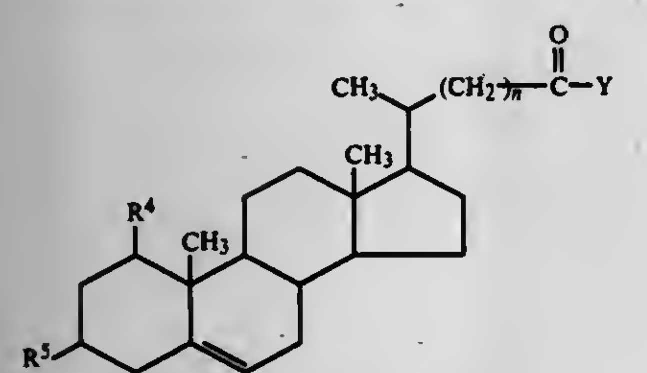

[III]

wherein R^4, R^5 and n are as defined above, and Y represents a halogen atom,

with an organozinc compound of the formula

$$Zn\{(CH_2)_m-C(CH_3)_2-R^3\}_pX_q \qquad [II]$$

wherein R^3 represents a hydrogen atom or a hydroxyl group protected as an ether group, p is 1 or 2 and q is 0 or 1 provided that $p+q=2$, X represents a helogen atom, and m is as defined above,

in an inert organic medium in the presence of a catalytic amount of an ether capable of forming a complex with the organozinc compound, and optionally, hydrolyzing the resulting product.

4,298,538

16-DIMETHYLAMINOMETHYLENE-3-METHOXY-1,3,5-(10)-ESTRATRIEN-17-ONE, A PROCESS FOR THE PREPARATION THEREOF AND ITS USE AS A PREPARATIVE INTERMEDIATE

Günter Neef; Ulrich Eder; Gregor Haffer, and Gerhard Sauer, all of Berlin, Fed. Rep. of Germany, assignors to Schering, Aktiengesellschaft, Berlin and Bergkamen, Fed. Rep. of Germany

Filed Dec. 18, 1979, Ser. No. 104,949

Claims priority, application Fed. Rep. of Germany, Dec. 22, 1978, 2856578

Int. Cl.^{3} C07J *1/00*

U.S. Cl. 260—397.4 **5 Claims**

1. A process for preparing a 16-ethylidene steroid which comprises reacting the corresponding 16-dimethylaminomethylene steroid with a methyl Grignard reagent.

4,298,539

PROCESS FOR THE ISOLATION OF β-SITOSTEROL

Lasse A. Koskenniska, Oulu, Finland, assignor to Farmos-Yhtma OY, Turku, Finland

Filed Oct. 30, 1980, Ser. No. 202,068

Claims priority, application Finland, Nov. 19, 1979, 793612

Int. Cl.^{3} C07J *9/00*

U.S. Cl. 260—397.25 **8 Claims**

1. A method for the isolation of β-sitosterol essentially free of α-sitosterol from a mixture containing both α- and β-sitosterol by treating the said mixture with a mixture of organic solvents and water wherein

(a) the solvent mixture is added to the β-sitosterol containing starting material so that the weight ratio of β-sitosterol containing starting material: solvent mixture is 1:2-1:30, and the solvent mixture consists of
  a hydrocarbon selected from the class consisting of a single aromatic hydrocarbon and a mixture of an aromatic and an aliphatic hydrocarbon, in an amount of 10-99%,
  a polar organic solvent, 1-90% water, at least in an amount necessary to saturate the hydrocarbon layer
(b) the mixture is warmed until the β-sitosterol containing starting material is dissolved
(c) the product is precipitated,
(d) the precipitate, which is essentially free of α-sitosterol is separated from the mother liquor by filtration.

4,298,540

PROCESS FOR OILSEED EXTRACTION WITH AN ISOPROPANOL-BASED SOLVENT

Kun C. Youn, and Dale J. Wilpers, both of Houston, Tex., assignors to Shell Oil Company, Houston, Tex.

Filed Dec. 15, 1980, Ser. No. 216,418

Int. Cl.^{3} A23J *1/14*

U.S. Cl. 260—412.4 **5 Claims**

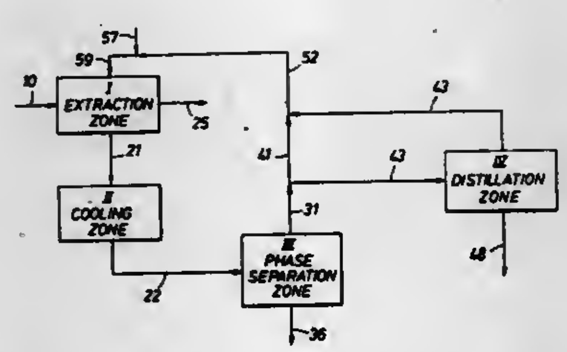

1. In the process for the recovery of oils from seeds containing extractable oils, comprising steps for contacting seeds having a water content of between about 9 and 13 percent by weight with an isopropanol-based extraction solvent in an extraction zone to obtain an extract of desired seedoils in the solvent, cooling the extract, and phase-separating the cooled extract into a lower liquid oil phase which is rich in seedoils and an upper liquid solvent phase containing recovered solvent, the improvement which comprises dividing the recovered solvent phase of the phase separation into a first division fraction comprising between about 60 and 95 percent of the solvent phase and a second division fraction comprising between about 5 and 40 percent of the solvent phase, directly recycling said first division fraction to the extraction zone as extraction solvent, distilling the second division fraction to yield a liquid distillation bottoms product comprising water and free fatty acids and a vapor distillation overhead product consisting essentially of a constant boiling mixture of isopropyl alcohol and water, condensing said vapor overhead to a liquid distillation overhead product, and recycling said liquid distillation overhead product to the extraction zone as extraction solvent.

4,298,541

TRIHYDROCARBYL SILYL-SUBSTITUTED ALKYL DIARYL PHOSPHINE TRANSITION METAL COMPLEXES AND THEIR USE AS HOMOGENEOUS CATALYSTS

Alexis A. Oswald, Mountainside, N.J.; Torris G. Jermansen, Staten Island, N.Y.; Andrew A. Westner, Paramus, and I-Der Huang, West Paterson, both of N.J., assignors to Exxon Research & Engineering Co., Florham Park, N.J.

Filed Feb. 12, 1979, Ser. No. 11,238

Int. Cl.^{3} C07F *15/00*

U.S. Cl. 260—429 R **25 Claims**

1. Complexes of the formula:

$$[(Ar_2PQ)_ySiR_{4-y}]_g(MX_n)_s$$

wherein Ar is selected from phenyl and mono-, di- or trisubstituted phenyl, said substituents being selected from the group consisting of fluorine, methyl and acetyl; Q is selected from xylylene and a C_2–C_{14} straight chain alkylene divalent radical; R is a C_1 to C_6 hydrocarbyl radical selected from the group consisting of C_1 to C_6 alkyl, C_5 and C_6 cycloalkyl, and phenyl; M is a Group VIII transition metal selected from the group consisting of Co, Rh, Ir, Ru,; X is an anion or organic ligand, excluding halogen, satisfying the coordination sites of the metal; y is 1 to 4; g is 1 to 6 with the proviso that g times y is 1 to 6; n is 2 to 6; and s is 1 to 3.

4,298,542

NEOPHYL MANGANESE CHLORIDE

Takao Yoshida, West Long Branch, N.J., assignor to International Flavors & Fragrances Inc., New York, N.Y.

Filed Sep. 18, 1980, Ser. No. 188,563

Int. Cl.^{3} C07F *3/02*

U.S. Cl. 260—429 R **1 Claim**

1. The organometallic compound having the structure:

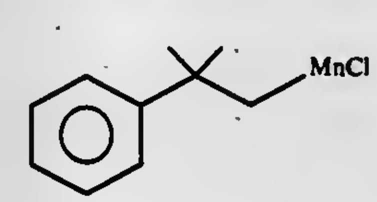

4,298,543

SILOXANE-TIN COATINGS

Gabriel H. Law, Whittier, and Albert P. Gysegem, Monrovia, both of Calif., assignors to Ameron, Inc., Monterey Park, Calif.

Division of Ser. No. 858,708, Dec. 8, 1977, Pat. No. 4,227,929, which is a division of Ser. No. 718,149, Aug. 26, 1976, Pat. No. 4,080,190. This application Feb. 19, 1980, Ser. No. 122,199

Int. Cl.^{3} C07F *7/22*

U.S. Cl. 260—429.7 **4 Claims**

1. A method for preparing a precursor having the formula:

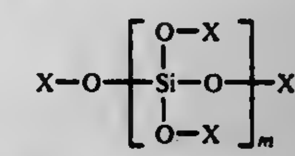

where m is from about 1 to about 10,

where each X is independently selected from the group consisting of alkyl and alkoxyalkyl radicals containing less than about 6 carbon atoms and Y,

where each Y in the precursor is independently a trisubstituted tin radical having the formula:

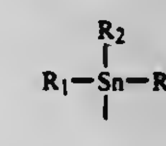

where R_1, R_2, and R_3 are independently selected from the group consisting of alkyl, cycloalkyl, and aryl radicals, where R_1, R_2, and R_3 contain in combination up to 18 carbon atoms, and

where the X's are selected so the ratio of tin atoms to silicon atoms in the precursor is from about 1:50 to $(2m+2)$:m;

the method comprising the steps of combining a silicate having the formula:

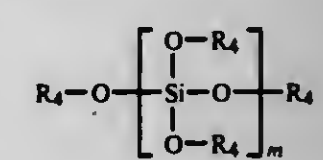

where R_4 represents the group consisting of alkyl and alkoxyalkyl radicals containing less than about 6 carbon atoms, with about n/2 moles of water per mole of the silicate and about n/2 moles of bis-trisubstituted tin oxide having the formula Y-O-Y per mole of the silicate, where the ratio of n to m equals the ratio of tin atoms to silicon atoms in the precursor; and

maintaining the temperature at which the silicate, tin oxide, and water are combined below the temperature at which the precursor decomposes.

4,298,544

MANUFACTURING PROCESS FOR PREPARING DISUBSTITUTED (N-CYANOIMIDO) CARBONATES

Graham E. Robinson, Macclesfield, England, assignor to Imperial Chemical Industries Limited, London, England

Filed Jan. 24, 1980, Ser. No. 118,066

Claims priority, application United Kingdom, Jan. 26, 1979, 79/02931; Jan. 26, 1979, 79/02932

Int. Cl.^{3} C07C *125/08;* **C07D** *319/04, 317/10*

U.S. Cl. 260—453 RW **10 Claims**

1. A process for the manufacture of a disubstituted (N-cyanoimido)carbonate of the formula:

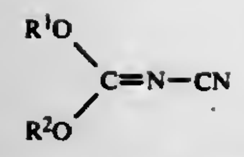

I

in which R^1 and R^2 are the same and are alkyl radicals of 1 to 6 carbon atoms or phenyl radicals, or R^1 and R^2 are joined to form an ethylene or propylene chain which is optionally substituted by 1 or 2 alkyl radicals each of 1 to 3 carbon atoms, by reaction of a disubstituted imidocarbonate of the formula:

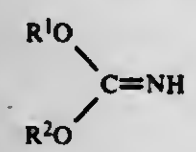

II

with cyanamide, characterised in that the reaction is conducted in a two phase system containing water and a water-immiscible organic solvent.

6. A process as claimed in claim 1 in which the starting material of the formula II is manufactured in situ by treatment of cyanogen chloride or cyanogen bromide with the appropriate alcohol or diol in a two phase system containing water and a water-immiscible organic solvent.

10. A process for the manufacture of a disubstituted imidocarbonate of the formula:

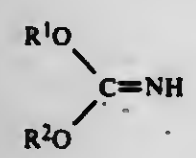

II

in which R^1 and R^2 are the same and are methyl or ethyl, or R^1 and R^2 are joined to form an ethylene or propylene chain which is optionally substituted by 1 or 2 alkyl radicals each of 1 to 3 carbon atoms, by reaction of cyanogen chloride or cyanogen bromide with the appropriate alcohol or diol, characterised in that the reaction is conducted in a two phase system containing water and a water-immiscible organic solvent.

4,298,545
PROCESS FOR PRODUCING PHTHALONITRILE
Masao Saito; Motoyuki Hosokawa; Takamasa Kawakami, and Yoko Murayama, all of Niigata, Japan, assignors to Mitsubishi Gas Chemical Company, Inc., Tokyo, Japan
Filed Apr. 3, 1980, Ser. No. 136,989
Claims priority, application Japan, Apr. 3, 1979, 54-39919
Int. Cl.³ C07C *121/56*
U.S. Cl. 260—465 H **12 Claims**

1. A process for producing phthalonitrile, which comprises contacting a xylylenediamine condensate with an oxide catalyst in the presence of a molecular oxygen-containing gas at a reaction temperature of 250°-600° C., said oxide catalyst being a catalyst of (1) silica or alumina, or (2) silica or alumina containing (a) vanadium oxide and at least one metal oxide selected from the group consisting of oxides of chromium, molybdenum, tungsten, bismuth, manganese, antimony, iron, boron, phosphorus, tellurium, and titanium, and said xylylenediamine condensate being a meta or paraxylylene diamine condensate represented by the formula:

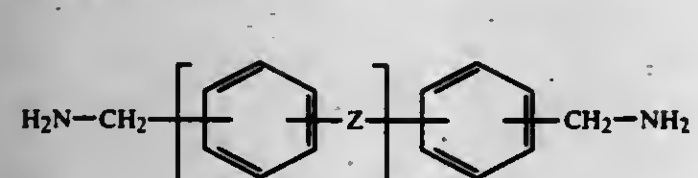

wherein Z is —CH=N—CH_2— or —CH_2—NH—CH_2— and n is an integer of 1 or more, or a mixture of the meta and paraxylylenediamine condensates.

4,298,546
ISOMERIZATION OF 2-METHYL-3-BUTENENITRILE
Robert N. McGill, Orange, Tex., assignor to E. I. Du Pont de Nemours and Company, Wilmington, Del.
Filed Aug. 5, 1980, Ser. No. 175,398
Int. Cl.³ C07C *121/30*
U.S. Cl. 260—465.9 **3 Claims**

1. In a process for the isomerization of 2-methyl-3-butenenitrile to linear pentenenitriles in the presence of a catalyst comprising a zero-valent nickel complexed with an organophosphorus compound, the improvement which comprises conducting said isomerization in the presence of at least 0.05% by weight based upon the weight of the reactants of butadiene.

4,298,547
PREPARATION OF IMPROVED ALKYLPHENYLSULFONATES
Lewis B. Young, Skillman, N.J., assignor to Mobil Oil Corporation, New York, N.Y.
Division of Ser. No. 61,222, Jul. 27, 1979, Pat. No. 4,234,751. This application Aug. 8, 1980, Ser. No. 176,367
Int. Cl.³ C07C *143/24*
U.S. Cl. 260—505 A **8 Claims**

1. In the process for making alkylbenzene sulfonate compounds comprising:
(A) alkylation of aromatic compounds to produce alkylbenzene compounds wherein the alkyl group has between about 6 and about 20 carbon atoms therein, followed by
(B) sulfonation of the alkylbenzene compounds to produce the alkylphenylsulfonate derivative thereof;
the improvement comprising selective production of alkylphenylsulfonates having reduced proportion of the 2-alkylphenylsulfonate isomer thereof; said improvement resulting from contact of the isomeric mixture of alkylbenzene compounds produced in Step (A) above, prior to carrying out Step (B) above, with a crystalline zeolite catalyst having a constraint index of about 1 to 12 and a silica to alumina mole ratio of at least 12, at a temperature of between about 150° C. and 550° C. and a pressure of between about $10^4 N/m^2$ and $10^6 N/m^2$.

4,298,548
CARBURETORS FOR INTERNAL COMBUSTION ENGINES
Michael Pontoppidan, Chatou, France, assignor to S.I.B.E. Societe Industrielle de Brevets et d'Etudes, Neuilly sur Seine, France
Filed May 2, 1980, Ser. No. 146,158
Claims priority, application France, May 11, 1979, 79 12124
Int. Cl.³ F02M *7/12*
U.S. Cl. 261—34 R **5 Claims**

1. A carburetor for an internal combustion engine comprising a fuel jet system opening into the intake pipe of the engine and comprising an emulsion well, an air path of invariable flow area for supplying atmospheric air to said wall, jetting means for supplying fuel to said well, and a device for correcting the fuel/air ratio of the mixture supplied to the engine as a function of the amplitude of the alternating pressure variations caused by the suction of the engine in the intake pipe, wherein the correcting device comprises a movable wall defining a chamber which communicates with the emulsion well and attenuating means through which the alternating pressure variations are applied to said well, whereby the device controls the depression in the emulsion well to increase or reduce the amplitude of the alternating component of the pressure which is

communicated thereto from the opening of the fuel jet system, according to whether the acoustic matching of the carburetor-

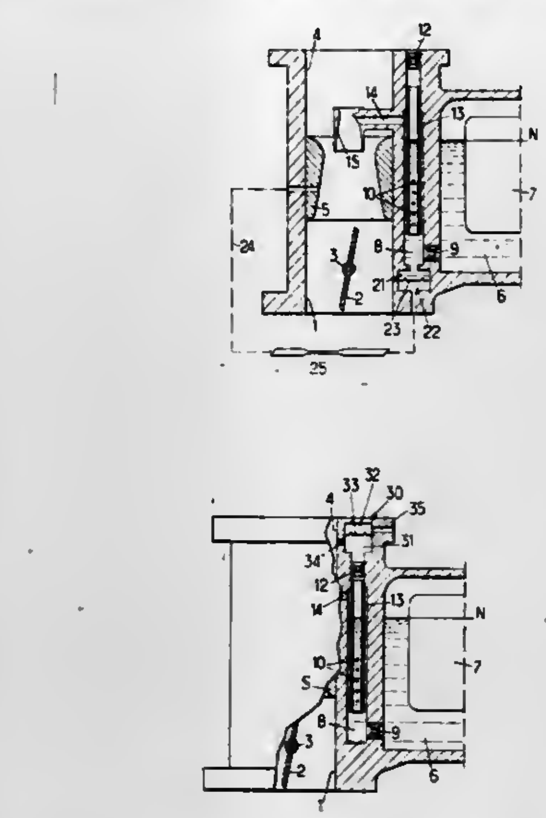

engine manifold assembly tends to produce for high charges of the engine an excessive or insufficient fuel/air ratio.

4,298,549
CARBURETOR
Albert H. Woodworth, Carlsbad, Calif., assignor to Woodworth Carburetor Corp. of Nevada, Carlsbad, Calif.
Filed Oct. 29, 1979, Ser. No. 88,944
Int. Cl.³ F02M *7/22*
U.S. Cl. 261—39 B **11 Claims**

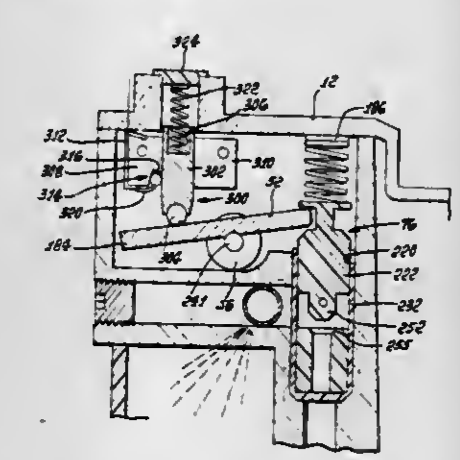

1. In an air valve carburetor having a throat, a throttle valve at the exit of the throat, an air valve at the entrance of the throat, a vacuum responsive actuator for driving said air valve in response to the vacuum pressure in the throat, a fuel nozzle disposed in the throat, a fuel reservoir and a fuel supply valve interconnected between the fuel reservoir and the fuel nozzle, means for interconnecting said fuel supply valve with said air valve, comprising:
a chamber in the housing of said carburetor disposed to contain said fuel supply valve;
a shaft interconnected with said air valve and rotatable upon adjustment of said valve, said shaft having an end projecting into said chamber;
a cam surface on the end of said shaft;
a cam follower disposed for engagement and movement by said cam surface upon rotation of said shaft, said cam follower being an elongated member with an anchor end and an action end and being disposed for engagement by said shaft intermediate said ends;
adjustable anchor means operatively associated with the anchor end of said cam follower, said anchor means being disposed to engage and hold said anchor end of said cam follower in a fulcrum position and being adjustable to change said fulcrum position; and
interconnection means on the action end of said cam follower interconnecting said action end with the fuel supply valve for regulation of said fuel supply valve in response to rotation of said shaft and cam surface;
said adjustable anchor means including a fulcrum shaft reciprocally movable vertically in said housing with a lower end disposed in contact with said cam follower, resilient means operatively associated with an upper end of said shaft and disposed to urge said shaft downwardly, and one-way lock means disposed operatively associated with said fulcrum shaft and disposed to permit downward movement thereof and prevent upward movement thereof.

4,298,550
CARBURETOR
Kenji Hayashi, Aichi, Japan, assignor to Aisan Industry Co., Ltd., Aichi, Japan
Filed Jan. 24, 1980, Ser. No. 114,794
Claims priority, application Japan, Jan. 29, 1979, 54/9568
Int. Cl.³ F02M *7/20*
U.S. Cl. 261—69 R **16 Claims**

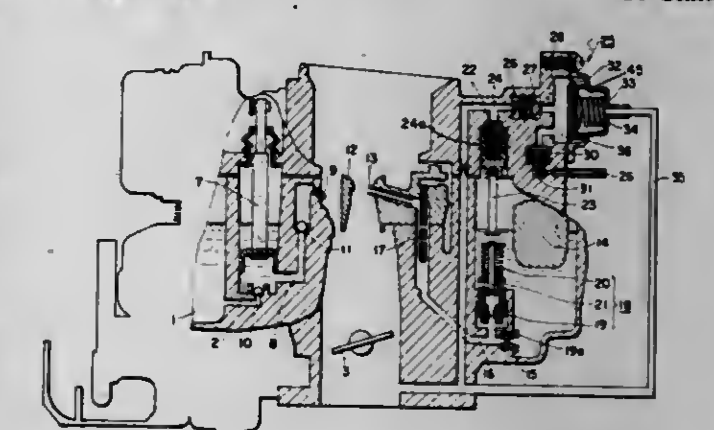

1. A carburetor having a suction pipe, comprising
a main fuel passage,
a fuel adding passage adapted for adding fuel and disposed in said main fuel passage,
a fuel adding valve means disposed in said fuel adding passage for opening and closing the latter, said fuel adding valve means including an auxiliary jet valve and a spring means for biasing said auxiliary jet valve in a direction of closing said fuel adding passage,
piston means for being biased by a biasing force in a direction for engaging said valve means,
means defining a piston chamber, said piston means is disposed in said piston chamber,
means comprising a negative pressure passage communicating with said suction pipe and connected to one end of said piston chamber for introducing intake negative pressure such that a force generated by said negative pressure acts in a direction against the biasing force acting on said piston means,
another valve means for communicating therethrough said one end of said piston chamber with atmospheric pressure,
diaphragm means for actuating said another valve means and defining a negative pressure chamber, and
an intake negative pressure introduction passage communicating with said suction pipe and leading to said negative pressure chamber of said diaphragm means.

4,298,551

APPLIANCE FOR MAKING AN AERATED BEVERAGE

Rune F. R. Adolfsson, Stockholm, and Dietrich W. Gellert, Ekero, both of Sweden, assignors to Thorn Svenska A.B., Solna, Sweden

Filed Aug. 2, 1979, Ser. No. 62,943

Int. Cl.³ B01F *3/04*

U.S. Cl. 261—121 R **11 Claims**

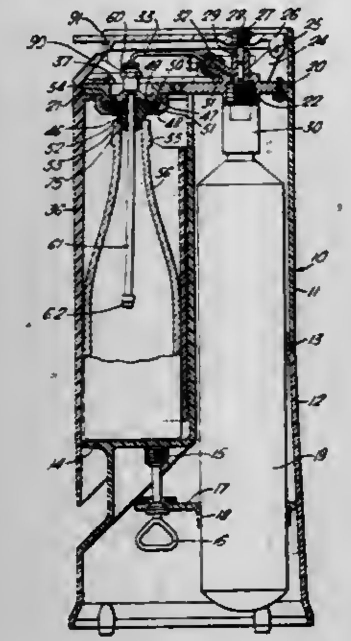

1. An appliance for making an aerated beverage comprising a casing, means for mounting a container of pressurized carbon dioxide in said casing, a manually operable valve to control the outflow of carbon dioxide from said container, a nozzle connected to said manually operable valve to receive carbon dioxide from said valve, means for mounting a bottle containing water, so that the nozzle is immersed in the water in said bottle, a flexible diaphragm surrounding the upper end of the nozzle, a stopper carried by the diaphragm and closing the neck of the bottle when so mounted, a space formed above the diaphragm communicating with the interior of the bottle when mounted with the stopper in its neck, the upwardly projected area of the diaphragm forming a wall of said space being greater than the downwardly projected area of said stopper, whereby the pressure of the carbon dioxide urges the stopper into engagement with the neck of the bottle, and an overpressure safety valve communicating with the space above the diaphragm.

4,298,552

SOLVENTLESS EXTRUSION OF DOUBLE BASE PROPELLANT PREPARED BY A SLURRY PROCESS

John R. Gimler, Succasunna, N.J., assignor to Hercules Incorporated, Wilmington, Del.

Filed Apr. 29, 1968, Ser. No. 725,588

Int. Cl.³ C06B *21/00*

U.S. Cl. 264—3 B **12 Claims**

1. A process for preparing double base propellant charges comprising:

(a) preparing a pourable slurry comprised of nitrocellulose propellant and a liquid platicizer for the nitrocellulose propellant,

(b) casting the slurry into molds,

(c) curing the cast slurry into a solid mass, and (d) extruding the solid mass into a small propellant charges.

4,298,553

METHOD OF PRODUCING LOW OXIDE METAL POWDERS

Maurice D. Ayers, Stamford, Conn., assignor to Metal Innovations, Inc., Stamford, Conn.

Continuation of Ser. No. 474,210, May 29, 1974, abandoned, Continuation-in-part of Ser. No. 229,307, Feb. 25, 1972, Pat. No. 3,814,558, Continuation-in-part of Ser. No. 855,096, Sep. 4, 1969, Pat. No. 3,646,176. This application Nov. 20, 1978, Ser. No. 962,488

Int. Cl.³ B01J *2/06*

U.S. Cl. 264—11 **10 Claims**

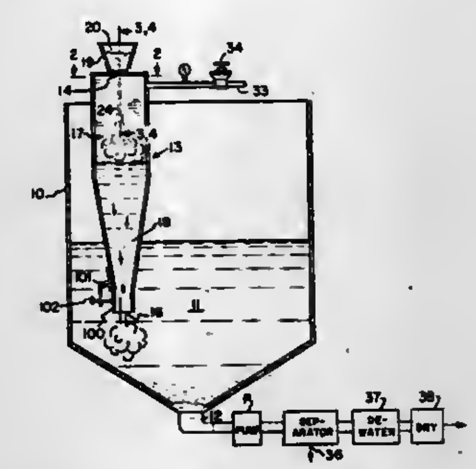

1. The method of atomizing molten metal which comprises the steps of

(a) directing a stream of molten metal downwardly into an enclosed, sealed, partially evacuated chamber through a restricted top opening formed in said chamber,

(b) impinging upon said stream of molten metal in an atomizing zone within said chamber high velocity jets of water at high pressure in two or more stages, including a first stage comprising a pair of thin, flat-shaped jets which atomize the metal stream and convert the metal stream into fine particles co-mingled with said water,

(c) guiding and confining the co-mingled water and metal particles directly downward through a flow passage of gradually decreasing cross section including a restricted discharge outlet at the lower end of said flow passage,

(d) sealing the lower end of said flow passage at said restricted discharge outlet by maintaining an open, confined body of water at a level above said restricted discharge outlet,

(e) causing said atomizing zone of said chamber to be maintained under a partial vacuum by reason of the discharge thereinto of said high velocity jets of water whereby said partial vacuum causes water from said open, confined body to rise upwardly through the restricted discharge outlet and flow passage and into said chamber to form a water leg,

(f) arranging said atomizing zone at a height in relation to the surface level of said open, confined body of water which is less than the height of said water leg required to equalize the partial vacuum in said atomizing zone,

(g) directing said high velocity jets of water in a generally downward direction directly toward said restricted discharge outlet with sufficient force and velocity whereby the water jets force the co-mingled water and metal particles downward and through the restricted discharge outlet with sufficient force and velocity to balance and largely offset the suction force created by the partial vacuum in said atomizing zone to establish the level of water in said water leg below the atomizing zone,

(h) discharging the downwardly flowing co-mingled water and metal particles through the restricted discharge outlet and into the open, confined body of water, and

(i) conducting steps (b), (c) and (h) in rapid sequence to achieve rapid quenching and cooling of the atomized particles to a temperature sufficiently low to avoid oxidation of the metal particles.

4,298,554

COHERENT RIGID SOLID MATERIAL

Edward G. Vogel, Lebanon, and Rodney C. Westlund, Lansdale, both of Pa., assignors to Lebanon Steel Foundry, Lebanon, Pa. Division of Ser. No. 851,407, Nov. 14, 1977, Pat. No. 4,138,268, which is a continuation-in-part of Ser. No. 782,950, Mar. 30, 1977, abandoned. This application Jul. 3, 1978, Ser. No. 921,595

Int. Cl.³ C04B *35/16*

U.S. Cl. 264—25 **26 Claims**

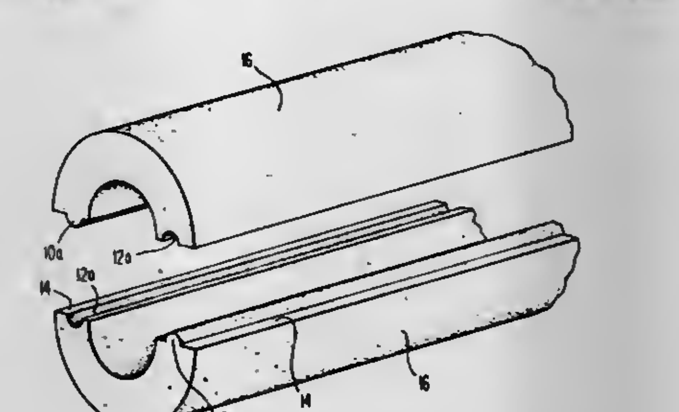

1. A process of making a coherent rigid solid material comprising the steps of mixing materials in the following parts by weight:

expanded perlite 20 through 50 parts;

sodium silicate or potassium silicate including 9.5 through 19 parts solids content of sodium silicate itself;

zinc oxide 2 through 9 parts;

sodium fluosilicate 1 through 6 parts; and

water, to make a total of water, including any that may be associated with the sodium silicate or the potassium silicate of 21.5 through 67 parts, and

thereafter subjecting the mixture to heat as a result of which there is no longer the original content of water.

4,298,555

MECHANIZED TROWEL FOR FINISHING CONCRETE SLABS

John T. Weltmer, 2623 Villa, Clovis, Calif. 93612

Filed Aug. 25, 1980, Ser. No. 181,009

Int. Cl.³ E02D *15/02;* **E04G** *21/10*

U.S. Cl. 264—31 **9 Claims**

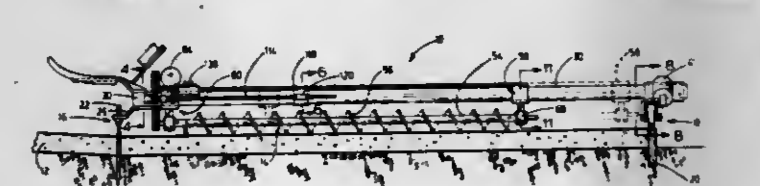

1. In a method for mechanically finishing dished-shaped concrete slabs of inverted conical configurations the steps comprising:

positioning an elongated blade of a helical configuration on the upper surface of a body of cement in a plastic state; and simultaneously pushing the cement upwardly, outwardly, and annularly relative to one end of said blade by rotating said blade about its longitudinal axis while simultaneously translating the opposite ends of the blade in a circular path about the one end of the blade.

4,298,556

METHOD FOR MATCHED DIE MOLDING A FIBER REINFORCED POLYURETHANE FOAM MOLDED PRODUCT

Peter W. Rutsch, Absteinach, and Michael Brehm, Weinheim an der Bergstrasse, both of Fed. Rep. of Germany, assignors to Firma Carl Freudenberg, Weinheim/an der Bergstrasse, Fed. Rep. of Germany

Filed Dec. 13, 1979, Ser. No. 92,187

Claims priority, application Fed. Rep. of Germany, Dec. 16, 1978, 2854544

Int. Cl.³ B29D *27/04*

U.S. Cl. 264—46.6 **4 Claims**

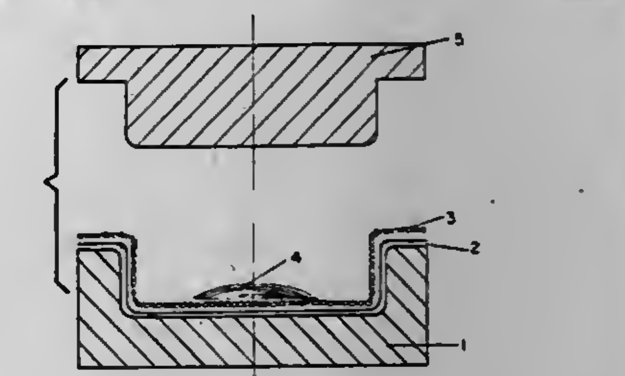

1. Method for matched die molding a fiber reinforced polyurethane foam molded product, comprising positioning a fiber reinforcement in the female part of an open matched die, placing a foaming reaction mixture of polyol and isocyanate on the reinforcement, closing the male part on the reinforcement so as to compact the reinforcement while the mixture continues foaming, and allowing the foaming reaction to complete so as to produce said product, said fiber reinforcement having a thinness and degree of compaction when said male part is closed normally preventing flow completely throughout the reinforcement prior to completion of the foaming reaction; wherein the improvement comprises initially adding to said mixture from 5% to 30% by weight of a neutral ester having a boiling temperature above the reaction temperature of the mixture, and causing the mixture to flow completely throughout said reinforcement prior to completion of the foaming reaction and while said die's male part is closed so as to produce said molded product with a high density and strength throughout.

4,298,557

METHOD AND APPARATUS FOR THE PREPARATION OF FOAMED STRUCTURES

Larry L. Bradford; David R. Jordan, and Kenneth W. Williams, all of Lake Jackson, Tex., assignors to The Dow Chemical Company, Midland, Mich.

Continuation-in-part of Ser. No. 102,681, Dec. 12, 1979, abandoned. This application Apr. 14, 1980, Ser. No. 140,324

Int. Cl.³ B29D *27/04*

U.S. Cl. 264—51 **8 Claims**

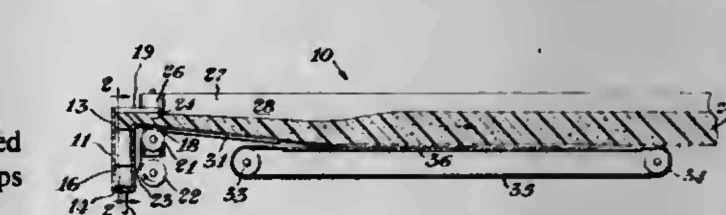

1. A method for the preparation of flexible polyurethane foam wherein a urethane foam forming mixture is provided, passing said mixture to a dispensing trough wherein partial foaming takes place, the dispensing trough discharging to a moving trough wherein the foam forming mixture expands and

cures to form a flexible polyurethane foam, the improvement which comprises providing means for maintaining a generally uniform temperature across the mixture as the mixture passes from the dispensing trough to the moving trough wherein the generally uniform temperature is obtained by altering the internal configuration of the dispensing trough.

4,298,558

HIGH YIELD SILICON CARBIDE PRE-CERAMIC POLYMERS

Ronald H. Baney, and John H. Gaul, Jr., both of Midland, Mich., assignors to Dow Corning Corporation, Midland, Mich.

Filed Jul. 23, 1980, Ser. No. 171,553

Int. Cl.³ F27B *9/04*

U.S. Cl. 264—65 **13 Claims**

10. A method of preparing a filled silicon carbide-containing ceramic article which consists of

(A) mixing a polysilane with at least one conventional ceramic filler which polysilane has the average formula

$\{(CH_3)_2Si\}\{CH_3Si\}$

in which polysilane there is from 0 to 60 mole percent $(CH_3)_2Si=$ units and 40 to 100 mole percent $CH_3Si\equiv$ units, wherein there is also bonded to the silicon atoms other silicon atoms and radicals having the formula

RO—

wherein R is an alkyl radical of 1 to 4 carbon atoms or phenyl wherein essentially all the remaining bonds on silicon are attached to chlorine or bromine atoms such that the polysilane contains from 24 to 61 weight percent of RO— when R is an alkyl radical, 26 to 66 weight percent of RO— when R is a phenyl radical, and either 0 to 25 weight percent chlorine or 0–35 weight percent bromine, all based on the weight of the polysilane,

(B) forming an article of the desired shape from the mixture of polysilane and fillers and,

(C) heating the article formed in (B) in an inert atmosphere or in a vacuum to an elevated temperature in the range of 1200° C. to 1600° C. until the polysilane is converted to a silicon carbide-containing ceramic.

4,298,559

HIGH YIELD SILICON CARBIDE FROM ALKYLATED OR ARYLATED PRE-CERAMIC POLYMERS

Ronald H. Baney, and John H. Gaul, Jr., both of Midland, Mich., assignors to Dow Corning Corporation, Midland, Mich.

Filed Jul. 23, 1980, Ser. No. 171,557

Int. Cl.³ F27B *9/04*

U.S. Cl. 264—65 **11 Claims**

8. A method of preparing a filled ceramic article which consists of

(A) mixing a polysilane with at least one conventional ceramic filler which polysilane has the average formula

$\{(CH_3)_2Si\}\{CH_3Si\}$

in which polysilane there is from 0 to 60 mole percent $(CH_3)_2Si=$units and 40 to 100 mole percent $CH_3Si\equiv$units, wherein there is also bonded to the silicon atoms other silicon atoms and additional alkyl radicals of 1 to 4 carbon atoms or phenyl;

(B) forming an article of the desired shape from the mixture of polysilane and fillers and,

(C) heating the article formed in (B) in an inert atmosphere or in a vacuum to an elevated temperature in the range of 1200° C. to 1600° C. until the polysilane is converted to a silicon carbide-containing ceramic.

4,298,560

METHOD OF MANUFACTURING A GRATE

Vernon F. Plass, 6320 Coteswood, Memphis, Tenn. 38134

Division of Ser. No. 961,925, Nov. 20, 1978, Pat. No. 4,233,024. This application Jun. 27, 1980, Ser. No. 163,644

Int. Cl.³ F27B *9/10*

U.S. Cl. 264—66 **7 Claims**

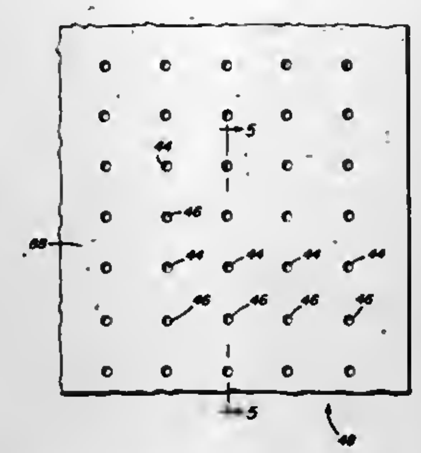

1. A method of manufacturing a grate for support of a combustible solid comprising the following steps:

(a) mixing a kaolin-type clay with about 10.4 percent of its weight of water;

(b) adding gradually stainless steel needles having the dimension of about 0.010 inches by 0.022 inches by 1 inch in the amount of 1½ percent of the weight of kaolin-type clay;

(c) mixing the resulting material thoroughly for about 5 minutes;

(d) pouring the mixture into prepared molds while vibrating for proper consistency;

(e) allowing the molds to stand at ambient temperature for about 15 hours to harden;

(f) drilling alternate rows of perpendicular and non-perpendicular through holes having a diameter of ¼ inch on 2 inch centers, the non-perpendicular through holes forming an angle of 15 degrees in the longitudinal direction with respect to a perpendicular;

(g) placing the drilled product in a curing oven at 100 degrees F.;

(h) increasing the oven temperature at a rate of 50 degrees per hour until the oven temperature reaches 1000 degrees F.;

(i) maintaining the oven temperature at 1000 degrees F. for about 8 hours;

(j) increasing the oven temperature 100 degrees per hour until the oven temperature reaches 2000 degrees F.; and

(k) decreasing the oven temperature gradually to an ambient temperature.

4,298,561

PROCESS FOR PREPARING CALCIUM SILICATE SHAPED PRODUCT

Mitsuo Uchida, Machida; Yasuo Oguri, Tokyo; Junji Saito, Machida, and Tsukasa Kawahara, Tokyo, all of Japan, assignors to Mitsubishi Chemical Industries, Ltd., Tokyo, Japan

Continuation of Ser. No. 849,468, Nov. 7, 1977, Pat. No. 4,193,958. This application Nov. 21, 1979, Ser. No. 96,292

Claims priority, application Japan, Nov. 18, 1976, 51/138721; Nov. 22, 1976, 51/140439; Dec. 14, 1976, 51/150066; May 31, 1977, 52/62621

The portion of the term of this patent subsequent to Mar. 18, 1997, has been disclaimed.

Int. Cl.³ C04B *7/34*

U.S. Cl. 264—86 **13 Claims**

1. A process for preparing a calcium silicate shaped product which comprises:

forming an aqueous slurry of calcium silicate hydrate of tobermorite group compounds having a wet volume of more than 15 cm³/g by heating at a temperature higher than 130° C. a siliceous source and a calcareous source dispersed in water to react them;

shaping the aqueous slurry with a press filter molding;

curing said filter slurry by a steam curing under pressure while transforming said calcium silicate hydrate from semi-crystalline or near-amorphous tobermorite to crystalline tobermorite or xonotlite; or from crystalline tobermorite to xonotlite; wherein said wet volume is given by the equation:

$$\text{wet volume} = (V/W)$$

wherein W represents the total weight of the calcareous source and the siliceous source, and V represents the volume of solid components after a 24 hours sedimentation of said aqueous slurry.

4,298,562

METHOD FOR MANUFACTURING SEALING RINGS

Cyril X. Latty, 6, Avenue du Maréchal de Lattre de Tassigny, 92210 Saint-Cloud, France

Continuation of Ser. No. 860,226, Dec. 13, 1977, abandoned, and a continuation of Ser. No. 654,770, Feb. 3, 1976, abandoned. This application Jun. 15, 1979, Ser. No. 49,032

Claims priority, application France, Feb. 4, 1975, 75 03465; Feb. 4, 1975, 75 03468

Int. Cl.³ B29G *5/00;* **D03D** *15/00;* **D03C** *1/02;* **F16J** *9/20*

U.S. Cl. 264—103 **10 Claims**

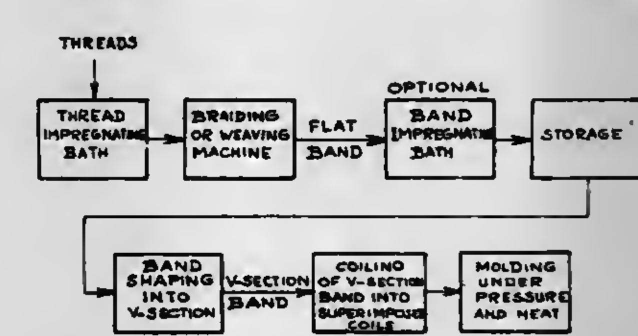

1. In a method for manufacturing a substantially wholly flexible substantially V-sectioned sealing ring of a reinforcing first material coated and impregnated with a vulcanized flexible elastomeric second material and defining circumferentially extending flexible lip portions of said two materials, the sealing ring having a uniform homogeneous structure throughout its cross section, said method comprising weaving or braiding a plurality of threads into a band, coiling the band about an axis to form a blank comprising a plurality of coils of the band which are in superimposed relation to each other axially of the blank, and moulding the blank in a mould under pressure with application of heat to impart said substantially V-sectioned shape, said band being put into a substantially V-sectioned shape subsequent to the weaving or braiding thereof but prior to the moulding thereof; the improvement comprising, prior to said weaving or braiding, individually passing said threads through a bath of said elastomeric material so as to individually coat and impregnate said threads whereby said woven or braided band is automatically uniformly and homogeneously impregnated and wholly coated, including on lateral edges thereof, with said elastomeric second material, and weaving or braiding the band to such width that said coated lateral edges of the band define said lip portions of said sealing ring and said sealing ring is wholly constituted by the coils of the coated and impregnated band and has a uniform homogeneous structure throughout its section.

4,298,563

APPARATUS AND METHOD FOR COMPACTING PRISMATIC OR PYRAMIDAL ARTICLES FROM POWDER MATERIAL

Raymond P. DeSantis, Royal Oak, and Herbert J. Puffer, Jr., Garden City, both of Mich., assignors to PTX-Pentronix, Inc., Lincoln Park, Mich.

Continuation of Ser. No. 952,708, Oct. 19, 1978, abandoned. This application Jun. 27, 1980, Ser. No. 163,932

Int. Cl.³ B30B *11/02;* **B22F** *3/02*

U.S. Cl. 264—111 **13 Claims**

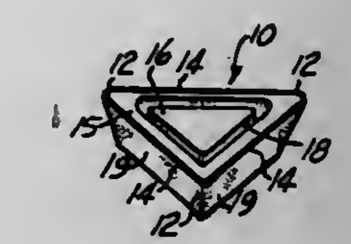

1. An apparatus for compacting powder material to a compacted article provided with a sharp edge at the junction of two surfaces of said article, said apparatus comprising a die having an upper surface and a bore vertically disposed in said die, said bore having peripheral walls forming a die cavity disposed at the top of said bore, said die cavity forming an opening in said upper surface of said die, a punch reciprocably movable in said bore and having an upper end face, a housing displaceable from a position away from said die cavity opening to a position over said die cavity opening, said housing having an end face engageable with said die upper surface, a longitudinal bore in said housing having an opening in said end face, a pair of concentric telescopic counterpunches permanently disposed in said bore in said housing, the innermost of said counterpunches being rigidly interconnected with said housing and having an end face of a peripheral perimeter smaller than the peripheral perimeter of said die cavity opening and the outermost of said counterpunches having an end face of a peripheral perimeter larger than the peripheral perimeter of said die cavity opening and smaller than said housing end face opening, the end face of said outermost counterpunch having a surface portion proximate the peripheral perimeter thereof engageable with said die upper surface and the end face of said outermost counterpunch having an aperture slidably accepting the end of said innermost counterpunch and a surface portion from the edge of said aperture to the surface portion engageable with said die upper surface overlapping said die cavity opening, means simultaneously advancing said housing end face toward said die upper surface for engagement therewith and said innermost counterpunch end face toward said die cavity opening whereby the advance of said housing and of said innermost counterpunch is limited to a predetermined position relative to said outermost counterpunch by engagement of said housing and bore with said die upper surface, and means advancing said punch toward said counterpunches for compacting powder material disposed in said die cavity between the end face of said punch, the end face of said innermost counterpunch and the portion of the end face of said outermost counterpunch overlapping said die cavity opening, whereby an article molded in said die cavity is provided with a lower face formed by said punch end face, sidewalls formed by the walls of said die cavity and an upper face formed by the surface of the end faces of both said counterpunches disposed over said die cavity opening, said sharp edges being at the junction between said sidewalls and said upper face.

4,298,564
DIE FOR EXTRUDING A HONEYCOMB STRUCTURAL BODY AND A METHOD OF EXTRUDING THE SAME
Noboru Higuchi, Nagoya, and Shoji Futamura, Kawasaki, both of Japan, assignors to NGK Insulators, Ltd., Nagoya and Institute of Technology Precision Electrical Discharge Works, Kawasaki, both of, Japan
Filed Apr. 28, 1978, Ser. No. 901,227
Claims priority, application Japan, May 4, 1977, 52-51790
Int. Cl.³ B29F *3/00*
U.S. Cl. 264—177 R **4 Claims**

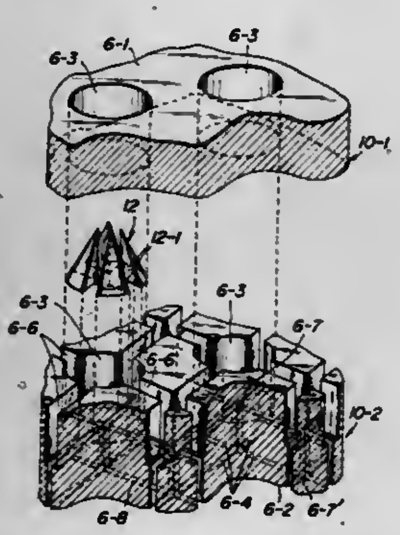

1. In a method of extruding a honeycomb structural body, wherein a raw stock is forcedly supplied into a plurality of feed inlets, which are formed independently from each other in a die, and then extruded from discharge slits, said slits intersecting one another, formed in the die, and wherein each of said feed inlets is opposed to one of said intersections, the improvement comprising storing the raw stock in guide channels formed between the feed inlets and discharge slits and having a width larger than the width of the discharge slits, said guide channels having a cross-sectional area larger than the cross-section area of the discharge slits, and then flowing forcedly the raw stock into the discharge slits.

4,298,565
SPINNING PROCESS
Hung H. Yang, Richmond, Va., assignor to E. I. Du Pont de Nemours and Company, Wilmington, Del.
Filed Feb. 12, 1980, Ser. No. 120,888
Int. Cl.³ D01D *5/14*
U.S. Cl. 264—181 **8 Claims**

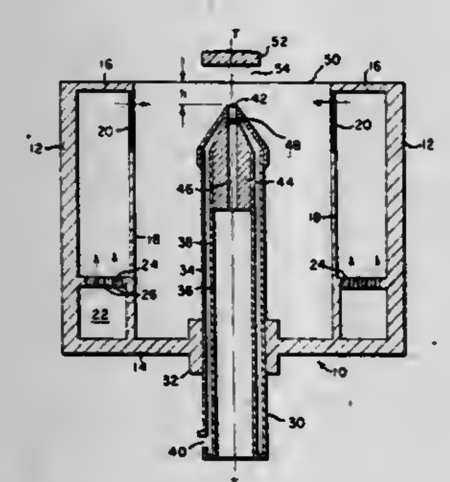

1. In a process for preparing high strength, high modulus aromatic polyamide filaments by extruding an acid solution containing at least 30 g. per 100 ml. acid of an aromatic polyamide having an inherent viscosity of at least 4 and chain extending bonds which are either coaxial or parallel and oppositely directed through a layer of inert noncoagulating fluid into a coagulating bath and then through a spin tube along with overflowing coagulating liquid, the improvement comprising jetting additional coagulating liquid symmetrically about the filaments in a downward direction forming an angle θ of 0° to 85° with respect to the filaments within 2.0 milliseconds from the time the filaments enter the spin tube, the flow rates of both the jetted and overflowing coagulating liquid being maintained at a constant rate such that their momentum ratio ϕ is from 0.5 to 6.0 and the mass flow rate of total coagulating liquid is from 70 to 200 times the mass flow rate of the filaments.

4,298,566
METHOD OF MOLDING ELECTRICAL CONNECTOR INSULATOR
Hubert W. Naus, Monrovia, and Alfred J. Bouvier, San Juan Capistrano, both of Calif., assignors to International Telephone and Telegraph Corporation, New York, N.Y.
Filed Jan. 7, 1980, Ser. No. 109,982
Int. Cl.³ B29C *1/14*
U.S. Cl. 264—317 **4 Claims**

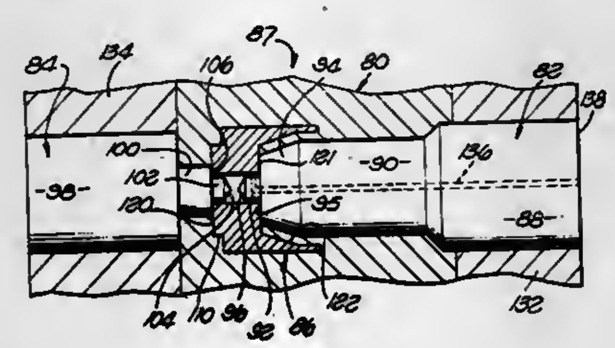

3. A method of making a one-piece, homogeneous electrical connector insulator having a contact passage therethrough with a closed entry defined by a circumferentially continuous inwardly extending annular flange adjacent to one end of said passage and resilient, radially expandable integral contact retention means adjacent to the other end of said passage extending forwardly and inwardly into said passage, comprising the steps of:

providing first and second core pins and a separable bushing, said bushing having a tapered recess in one end thereof for defining the outer surface of said contact retention means, said first core pin having a tapered end portion for defining the inner surface of said contact retention means, and said second core pin having a cylindrical portion of a diameter less than the outer diameter of said bushing for defining the bore in said closed entry;

inserting said first core pin coaxially into the recess in said bushing to a position wherein said tapered end portion thereof is close to but spaced from the tapered wall of said recess;

positioning said second core pin coaxially relative to said bushing with said cylindrical portion thereof adjacent to the other end of said bushing;

providing a continuous annular space immediately surrounding said cylindrical portion of said second core pin for forming said annular flange;

molding an insulator around said bushing and core pins;

removing said core pins from said insulator leaving said bushing therein; and

eliminating said bushing from the interior of said insulator.

4,298,567
STRETCHING AND BLOW MOLDING OF SYNTHETIC RESIN BOTTLES WITH BASE CUPS
Katashi Aoki, 6037, Ohaza Minamijo, Sakakimachi, Hanishina-gun, Nagano-ken, Japan
Filed Aug. 20, 1980, Ser. No. 179,779
Claims priority, application Japan, Aug. 22, 1979, 54-106913
Int. Cl.³ B29C *17/07;* **B29D** *3/00*
U.S. Cl. 264—516 **2 Claims**

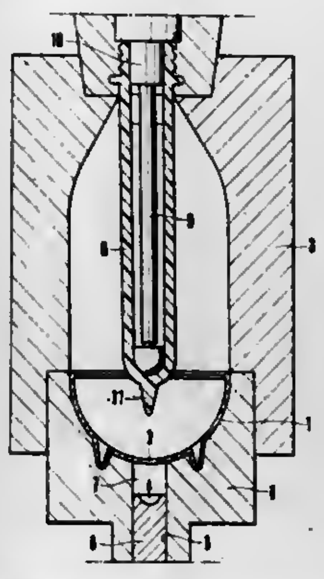

1. A method of manufacturing a synthetic resin bottle with a base cup by stretching and blow molding comprising:

(1) inserting and mounting the base cup in a bottom mold of a blow mold, said base cup having a hole of predetermined size at the central portion of the bottom thereof;

(2) stretching a parison with a bottom having a sprue at the bottom surface thereof to the bottom surface of the base cup by means of a stretching rod after closure of the mold, said sprue being so positioned to correspond to the central portion of the blow mold, thereby inserting the sprue into the hole in the bottom of the base cup;

(3) pressing and crushing said sprue by means of a pressing jig mounted in a hole in the central portion of the bottom mold to form a rivet for securely fixing the bottom of the parison to the base cup; and

(4) blowing air into the parison with a bottom to press the bottom surface of the parison with a bottom against the inner surface of the base cup and to allow the bottom surface of the parison with a bottom to adhere securely to the inner surface of the base cup.

4,298,568
METHOD AND COMPOSITION FOR INHIBITING CORROSION OF NONFERROUS METALS IN CONTACT WITH WATER
Werner Gerhardt; Volker Wehle, both of Hilden; Andreas Syldatk, Dusseldorf; Gabriele Rogall, Neukirchen-Vluyn; Jürgen Reiffert, Oberhausen, and Jens Conrad, Hilden, all of Fed. Rep. of Germany, assignors to Henkel Kommanditgesellschaft auf Aktien, Dusseldorf-Holthausen, Fed. Rep. of Germany
Filed Aug. 14, 1980, Ser. No. 177,898
Claims priority, application Fed. Rep. of Germany, Aug. 25, 1979, 2934461
Int. Cl.³ C23F *11/06, 11/16, 11/12, 11/14*
U.S. Cl. 422—16 **10 Claims**

1. A method for inhibiting corrosion of non-ferrous metals in contact with circulating water comprising the steps of adding to circulating water in contact with nonferrous metals from 0.05 to 10 gm/m³ of at least one 3-amino-5-alkyl-1,2,4-triazole wherein said alkyl has from 2 to 8 carbon atoms and adjusting said water to a pH of from 6 to 10.

4,298,569
STEAM-FORMALDEHYDE STERILIZATION INDICATOR
David M. Read, Harlow, England, assignor to Minnesota Mining and Manufacturing Company, St. Paul, Minn.
Continuation of Ser. No. 881,471, Feb. 27, 1978, abandoned. This application Jan. 28, 1980, Ser. No. 115,785
Claims priority, application United Kingdom, Mar. 11, 1977, 10484/77
Int. Cl.³ A61L *2/18*
U.S. Cl. 422—27 **5 Claims**

1. A method for indicating that an article has undergone steam-formaldehyde sterilization which comprises attaching an indicator to an article, said indicator comprising a substrate carrying a dye which will undergo an irreversible color change when exposed to formaldehyde vapor in the presence of low temperature steam and wherein a buffering agent is mixed with said dye and said buffer has a pH of from 4 to 6, and then inserting said article with indicator into an environment wherein the article and indicator are exposed to steam and formaldehyde so that the article is sterilized wherein said steam is between 60° and 80° C. and where said indicator will not change color when exposed to 134° C. steam in the absence of formaldehyde for 3½ minutes.

4,298,570
TRAY SECTION FOR AUTOMATED SAMPLE HANDLING APPARATUS
John E. Lillig, Diamond Bar, and Richard C. Meyer, La Habra, both of Calif., assignors to Beckman Instruments, Inc., Fullerton, Calif.
Filed Apr. 18, 1980, Ser. No. 141,455
Int. Cl.³ G01N *1/14, 1/18*
U.S. Cl. 422—64 **1 Claim**

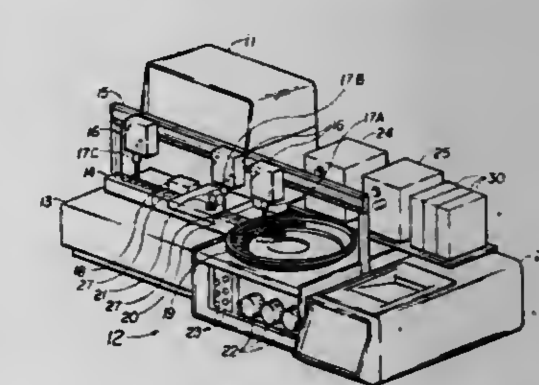

1. A tray for use with an automated sample handling apparatus turntable, said turntable including a circular retaining rim, said circular retaining rim including at least one row of holes arranged in a circular configuration on said rim, said tray comprising a tray section configured as a segment of a circle, said tray section having a relatively narrow innermost width area and a relatively wide outermost width area, said tray section including a first row of wells configured in a relatively narrow arc in said narrow innermost width area and a last row of wells configured in a relatively wide arc in said wide outermost area, said wells formed as an integral part of said tray section and including well portions extending downwardly from said tray section, said last row of wells including a plurality of well portions spaced from each other and from an adjacent row of wells such that each said well portion in said last row is insertible into an adjacent hole in said row of holes in said rim, said tray section thereby retained by said rim.

4,298,571
INCUBATOR INCLUDING COVER MEANS FOR AN ANALYSIS SLIDE
Anthony P. DiFolvio, and Michael R. Smith, both of Rochester, N.Y., assignors to Eastman Kodak Company, Rochester, N.Y.
Continuation of Ser. No. 751,872, Dec. 17, 1976, Pat. No. 4,224,032, and a continuation of Ser. No. 751,911, Dec. 17, 1976, Pat. No. 4,219,529. This application Jun. 16, 1980, Ser. No. 159,550
Int. Cl.³ G01N *35/04*
U.S. Cl. 422—65 **5 Claims**

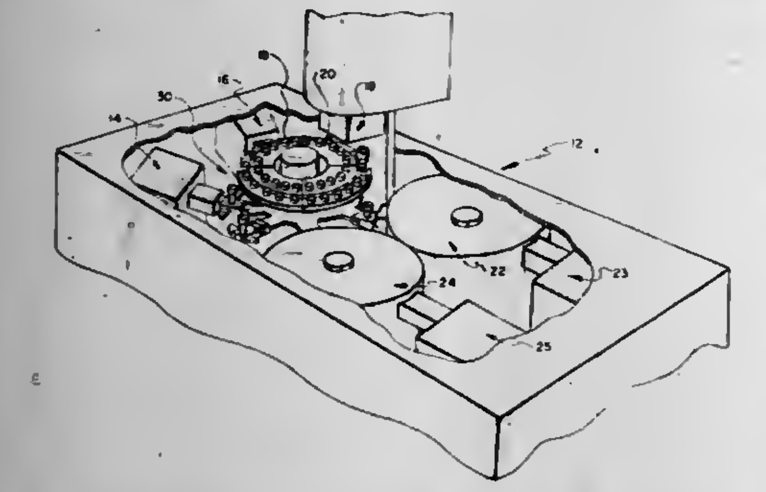

1. Apparatus for use in the analysis of fluids deposited on analysis slides, said apparatus comprising:
means defining a temperature-controlled chamber for receiving and conditioning the analysis slides, said chamber having a transfer location at which slides can be transferred from said chamber;
conveyor means in said chamber for supporting the slides during the conditioning thereof and for transporting a selected slide to said transfer location;
cover means in said chamber for controlling evaporation of fluid on the slides, said cover means being positionable into an operative position to at least partially enclose slides on said conveyor and said cover means being positionable to a second position spaced from said operative position to permit said selected slide to be transferred at said location; and
control means for positioning said cover means.

4,298,572
MUD LOGGING SYSTEM
John N. Moffet; John D. Moffet, both of Wichita Falls, and David L. Ragsdill, Arlington, all of Tex., assignors to Energy Detection Company, Wichita Falls, Tex.
Filed Feb. 27, 1980, Ser. No. 125,241
Int. Cl.³ G01N *33/24, 7/14*
U.S. Cl. 422—68 **5 Claims**

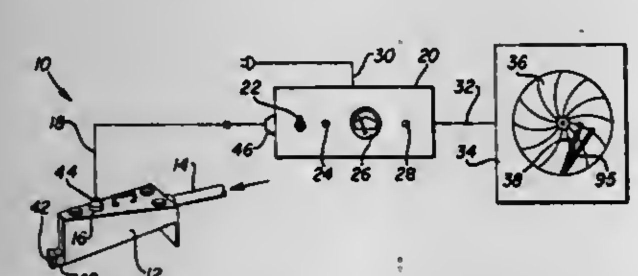

1. Apparatus for automatically and continuously analyzing hydrogen gas associated with drilling mud circulated through a borehole, which comprises:
a sampling chamber having front and back ends, and top and bottom sides;
an inlet in said front end of said sampling chamber for receiving drilling mud from the borehole;
an outlet in said back end of said sampling chamber for returning drilling mud to the borehole;
said sampling chamber having a rectangular cross-sectional shape, increasing in width and decreasing in height from said back end of said sampling chamber to said front end thereof, such that said bottom wall is inclined relative to said top wall of said sampling chamber to thereby facilitate the unobstructed flow of drilling mud from said inlet to said outlet of said sampling chamber and percolate the hydrogen gas out of the drilling mud;
sensing means mounted in said sampling chamber for continuously sensing the concentration of hydrogen gas present in said sampling chamber and associated with the drilling mud as the drilling mud flows through said sampling chamber, said sensing means generating a signal representative of said concentration of hydrogen gas; and
recording means coupled to said sensing means for automatically receiving said signal generated by said sensing means to thereby record said concentration of hydrogen gas over a predetermined period of time associated with the drilling mud flowing through said sampling chamber.

4,298,573
DEVICE FOR DETECTION OF OXYGEN CONCENTRATION IN COMBUSTION GAS
Takeshi Fujishiro, Yokosuka, Japan, assignor to Nissan Motor Company, Limited, Yokohama, Japan
Filed May 15, 1980, Ser. No. 150,059
Claims priority, application Japan, May 19, 1979, 54-61023
Int. Cl.³ G01N *27/46, 33/22*
U.S. Cl. 422—94 **11 Claims**

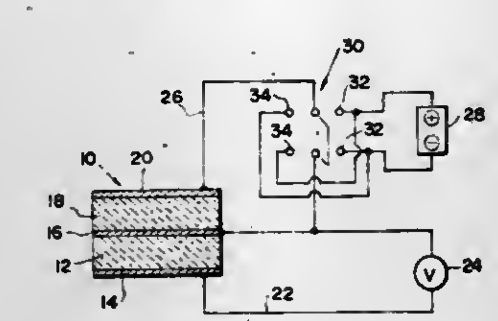

1. A device for detecting the concentration of oxygen in a combustion gas thereby detecting an actual air/fuel ratio of an air-fuel mixture from which the combustion gas was produced, the device comprising a probe to be disposed in the combustion gas, said probe comprising:
a first electrode which is gas permeable;
a second electrode spaced from said first electrode;
an oxygen ion conductive solid electrolyte layer arranged to occupy the space between said first and second electrodes;
a third electrode which is gas permeably porous and spaced from said second electrode; and
a gas permeably porous layer of an oxygen ion conductive solid electrolyte arranged to occupy the space between said second and third electrodes;
at least one of said first and second electrodes being made of a catalytic material which exhibits a catalytic action on oxidation reactions, said first, second and third electrodes being arranged such that the combustion gas directly contacts said first and third electrodes and comes into contact with said second electrode through said gas permeably porous layer occupying the space between said second and third electrodes, so that said probe can generate an electromotive force across said first and second electrodes as an indication of the concentration of oxygen in the combustion gas.

4,298,574
HYDROGEN GAS DETECTOR
Thomas L. Bohl, Madison, Ohio, assignor to The Babcock & Wilcox Company, New Orleans, La.
Continuation of Ser. No. 940,049, Sep. 6, 1978, abandoned, which is a division of Ser. No. 51,664, Jun. 25, 1979, Pat. No. 4,222,900. This application Jan. 10, 1980, Ser. No. 111,046
Int. Cl.³ G01N *27/16*
U.S. Cl. 422—97 **6 Claims**

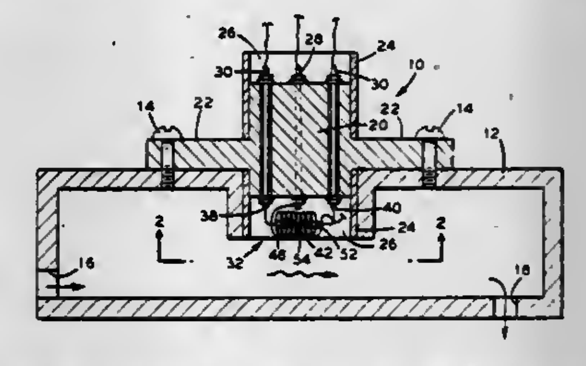

1. A detector for monitoring hydrogen gas in a stream comprising:
a first thermocouple junction located in the gas stream;
a second thermocouple junction located in the gas stream and connected to said first thermocouple to form a differential thermocouple;
catalytic means having numerous catalytic sites formed around said first thermocouple junction from etching said catalytic means with Potassium-hydroxide allowing hydrogen in the gas stream to selectively react with said catalytic means above a predetermined threshold temperature to liberate heat and increase the temperature of said first thermocouple above ambient temperature;
heater means for maintaining said first thermocouple junction above the predetermined threshold temperature;
insulation means formed around said second thermocouple junction to prevent hydrogen in the gas stream from reacting with said second thermocouple junction to liberate heat thereby making said second thermocouple junction measure only ambient temperature; and
indicating means connected to said first and second thermocouple junctions to measure the temperature difference measured by said first and second thermocouple junctions to provide an indication of hydrogen content in the gas stream.

4,298,575
PIPETTING AND DOSING DEVICE
Erling Berglund, Järfälla, Sweden, assignor to LKB Clinicon Aktiebolag, Bromma, Sweden
Filed Aug. 27, 1979, Ser. No. 70,268
Claims priority, application Sweden, Sep. 4, 1978, 7809267
Int. Cl.³ B01L *3/02;* G01N *1/14*
U.S. Cl. 73—864.13 **9 Claims**

1. A pipetting and dosing device comprising an internally cylindrical suction pipe having a conically tapering distal end with a central opening at its apex, a piston axially movable within said suction pipe while sealing against the inner wall of the pipe, the end of said piston facing the distal end of the suction pipe being provided with a conical tip having an apex angle somewhat larger than the apex angle of the conically tapering end of the suction pipe, either of said conical tip of the piston and said conically tapering end of the suction pipe being made of a resiliently deformable material, so that upon movement of the piston into abutment against the conically tapering end of the suction pipe the conical tip of the piston and the conically tapering end of the suction pipe can, by a given elastic deformation of said deformable material, be brought into complete conformity without any residual interspace therebetween, drive means coupled to said piston for moving the piston axially over well-defined distances in said suction pipe for, respectively, sucking up and discharging predetermined volumes of liquid through said opening, a support housing supporting said piston and said drive means, said suction pipe being attached to said support housing with its opposite end; pressure sensing transducer means disposed between said support housing and said opposite end of the suction pipe for detecting the prevailing axial force between the conical piston tip and the conically tapering end of the suction pipe and for generating a corresponding signal, and control means for said

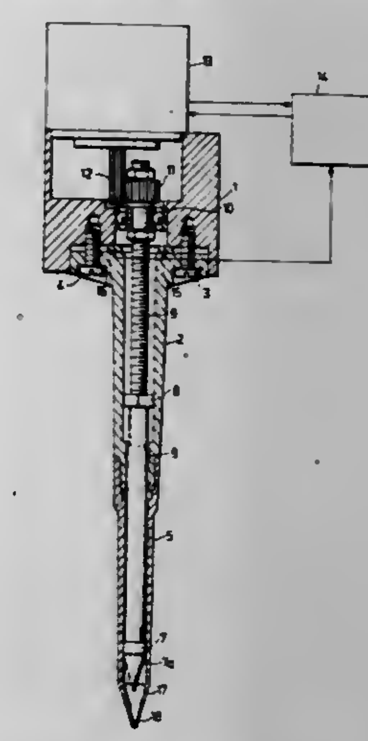

drive means, said control means being responsive to said transducer signal to interrupt the discharge movement of the piston when said force reaches a predetermined upper limit value sufficient for said given elastic deformation upon abutment of the conical piston tip against the conically tapering end of the suction pipe.

4,298,576
POLYMERIZATION AUTOCLAVE
Helmut Thyret; Thomas Balwe; Josef Hanzalik; Herbert Fürst, and Johann Bauer, all of Burghausen, Fed. Rep. of Germany, assignors to Wacker-Chemie GmbH, Munich, Fed. Rep. of Germany
Filed Nov. 27, 1979, Ser. No. 97,708
Claims priority, application Fed. Rep. of Germany, Dec. 5, 1978, 2852622
Int. Cl.³ C08F *114/08;* B01J *19/18*
U.S. Cl. 422—135 **2 Claims**

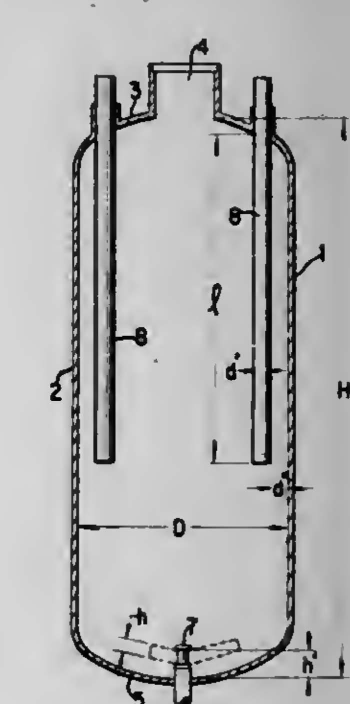

1. A polymerization autoclave for the suspension polymeri-

zation of vinyl compounds in the aqueous phase to form vinyl chloride homopolymers and copolymers of over 60% by weight of vinyl chloride and the remainder ethylenically unsaturated monomers copolymerizable with vinyl chloride, said autoclave having a substantially cylindrical wall with a slightly dished dome and bottom and having a volume of from 70 to 125 m^3, heat exchange jacket means attached to the autoclave and being the sole means of heat exchange, an impeller agitator mounted on a shaft extending from the bottom of said autoclave and driven from below and two cylindrical displacement bodies suspended from said dome and acting as flow interrupters, consisting in that said autoclave has a height-to-diameter ratio of from 2.5 to 2.7 and satisfies the following ratios:

$d/D=0.5$ to 0.53
$h/d=0.16$ to 0.17
$h/H=0.03$ to 0.04
$l/H=0.35$ to 0.45
$d'/l=0.085$ to 0.095
$d''/d''=0.9$ to 1.1
$h'/h=1.7$ to 2.0

wherein
H = the height of said autoclave
D = the diameter of said autoclave
d = the diameter of the impeller agitator
h' = the distance from the top of the impeller blade at the impeller shaft to the bottom of said autoclave
h = the height of the impeller blade
l = the length of said displacement body
d' = the diameter of said displacement body
d'' = the distance of said displacement body from the cylindrical wall of said autoclave.

4,298,577
PROCESS FOR RECOVERY OF URANIUM FROM SEA WATER

Ludwig Ashtheimer, Jülich; Hans-Joachim Schenk, Aachen, and Klaus Schwochau, Jülich, all of Fed. Rep. of Germany, assignors to Kernforschungsanlage Jülich GmbH, Jülich, Fed. Rep. of Germany

Filed May 19, 1978, Ser. No. 907,630
Claims priority, application Fed. Rep. of Germany, May 20, 1977, 2722838
Int. Cl.[3] C01G *43/00*
U.S. Cl. 423—6 **2 Claims**

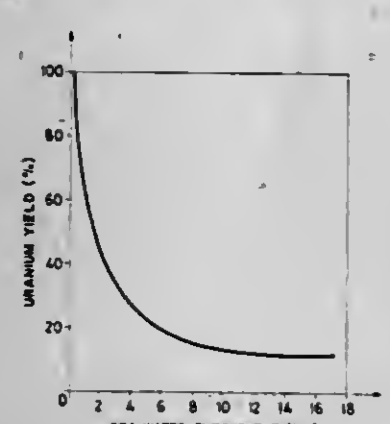

1. A process for recovery of uranium naturally occurring in solution in sea water by concentrative adsorption, comprising the steps of:
bringing sea water which is substantially unmodified as to composition and pH into contact with an adsorbent-holding matrix consisting of granulated lignite until a quantity of uranium is adsorbed which is substantially the maximum adsorbable amount thereof;
then removing said matrix from the sea water and burning said matrix for its heating value and thereby also concentrating the uranium in the combustion residue; and
treating said residue to recover the uranium from the residue in the form of its salts.

4,298,578
LEACH METHOD INCLUDING MEANS TO PROTECT ION EXCHANGE RESIN

Tsoung-yuan Yan, Philadelphia, Pa., and Raymond L. Lozano, Thoreau, N. Mex., assignors to Mobil Oil Corporation, New York, N.Y.

Filed Nov. 24, 1978, Ser. No. 963,662
Int. Cl.[3] C01G *43/00*
U.S. Cl. 423—7 **8 Claims**

5. A method for recovering uranium values from a leach solution comprising:
passing said leach solution through an ion-exchange resin to adsorb said uranium values from said leach solution onto said resin;
passing a fresh eluant through said resin to desorb said uranium values from said resin into said uluant;
adding hydrogen peroxide to said eluant to precipitate said uranium values from said eluant thereby producing barren eluant;
passing said barren eluant through a catalytic material effective to decompose hydrogen peroxide into water and oxygen; and
adding chemicals to said barren eluant after it passes through said catalytic material to make up fresh eluant for recycle in said method.

4,298,579
METHOD OF PRODUCING PUO_2 BY CALCINATION OF PU OXALATE PRODUCED BY DISCONTINUOUS PRECIPITATION FROM SOLUTIONS CONTAMINATED WITH AMERICIUM

Karl-Dieter Kuhn, Liedolsheim, and Karl-Heinz Koch, Alzenau-Albstadt, both of Fed. Rep. of Germany, assignors to Alkem GmbH, Hanau, Fed. Rep. of Germany

Filed Jun. 1, 1977, Ser. No. 802,553
Claims priority, application Fed. Rep. of Germany, Jun. 3, 1976, 2624990
Int. Cl.[2] C01G *56/00*
U.S. Cl. 423—11 **10 Claims**

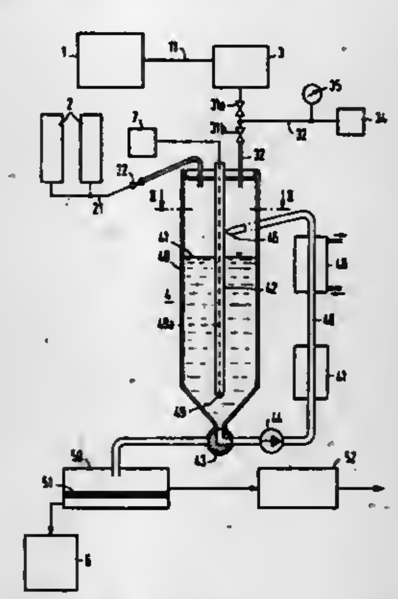

1. In a method for the production of PuO_2 by discontinuous precipitation of Pu oxalate from a Pu nitrate-nitric acid solution in a reaction vessel with solid oxalic acid or solid ammonium oxalate, subsequent separation of the Pu oxalate precipitate from the residual liquid and calcination of the Pu oxalate precipitate to PuO_2, the improvement comprising concurrently preventing americium contained in said Pu nitrate-nitric acid solution as a contaminant from passing into said Pu oxalate-precipitate by maintaining the Pu nitrate-nitric acid solution containing americium as a contaminant at a temperature of 60°–95° C., adding to said 60°–95° C. solution an amount of said solid oxalic acid or solid ammonium oxalate in free-flowing granular form substantially free of clusters and lumps, in stoichiometric deficiency of up to 7% of oxalic acid for reaction with the Pu in said 60°–95° C. solution, separating the resultant Pu oxalate precipitate into which at least a portion of the americium contaminant has been prevented from entering from the residual liquid in which the americium contaminant is retained and calcining the thus purified Pu oxalate precipitate to PuO_2.

4,298,580
SEPARATION OF COBALT AND MANGANESE FROM TRIMELLITIC ACID PROCESS RESIDUE BY PRECIPITATING AS CARBONATES, REDISSOLVING AS HALIDES AND REMOVING COBALT BY MAGNETIC MEANS

Jon J. Harper, Naperville, and Stephen J. Pietsch, Oak Park, both of Ill., assignors to Standard Oil Company (Indiana), Chicago, Ill.

Filed Dec. 19, 1980, Ser. No. 218,061
Int. Cl.[3] C01G *45/06, 51/08*
U.S. Cl. 423—40 **11 Claims**

1. A method of recovering cobalt and manganese and separating recovered cobalt from recovered manganese from residue obtained from the manufacture of trimellitic acid produced by the oxidation of liquid pseudocumene with molecular oxygen in the presence of cobalt and manganese as the metal oxidation catalyst; which method of recovery and separation comprises dissolving the acidic organic components of said residue in water containing carbonate ion together with sodium, or potassium, or ammonium ions and precipitating catalyst metals as carbonates; separating the aqueous solution from the metal carbonate precipitate; redissolving the catalyst metals as their halides by mixing the carbonate precipitate with an aqueous solution containing hydrochloric or hydrobromic acid in an amount to provide a solution pH of 3 to 4 thereby precipitating iron, if present,; thereafter adjusting the precipitate-free solution's pH to 5 to 6 and adding powdered manganese thereto in an amount of from 1 to 2 chemical equivalents for each 1.0 chemical equivalent of cobalt in solution thereby precipitating metallic cobalt; and magnetically separating the pH-adjusted solution from the metallic cobalt precipitate.

4,298,581
PROCESS FOR RECOVERING CHROMIUM, VANADIUM, MOLYBDENUM AND TUNGSTEN VALUES FROM A FEED MATERIAL

Donald A. Douglas, Amherst, N.H.; Jameel Menashi, Lexington, and Alkis S. Rappas, Bedford, both of Mass., assignors to Cabot Corporation, Kokomo, Ind.

Filed Apr. 15, 1980, Ser. No. 140,437
Int. Cl.[3] C01G *31/00, 37/00, 39/00, 41/00*
U.S. Cl. 423—58 **20 Claims**

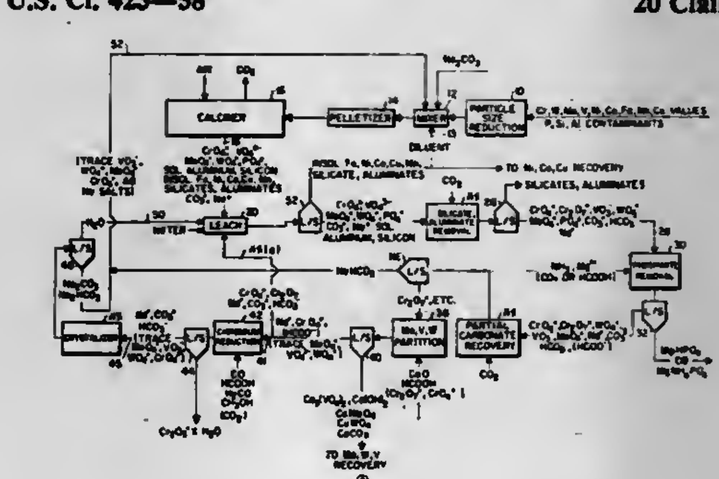

1. A process for recovering chromium, vanadium, molybdenum, and tungsten values from a feed material containing said values and one or more values selected from the group consisting of cobalt, nickel, iron and copper, said process comprising the steps of:
A. calcining said feed material in an oxygen containing atmosphere and in the presence of sodium carbonate;
B. water leaching the product of the calcination of step A to produce an aqueous alkaline leach liquor containing chromium, tungsten, vanadium, and molybdenum values;
C. selectively removing molybdenum, tungsten, and vanadium from the leach liquor produced in step B by treatment with calcium ions to produce a mixed calcium cake containing tungstate, vanadate, and molybdate ions and a chromium containing leach liquor;
D. reducing and recovering chromium values in the leach liquor of step C, a carbon containing reducing agent being used to reduce the leach liquor;
E. treating the calcium cake containing tungstate, vanadate, and molybdate ions produced in step C with an aqueous acidic solution to selectively remove calcium and vanadium values as a vanadium containing liquor;
F. recovering vanadium from the liquor of step E;
G. selectively dissolving molybdenum and tungsten from the calcium cake remaining after step E while precipitating calcium as a substantially tungsten and molybdenum-free solid, H_2O_2 being used to partition calcium; and
H. recovering molybdenum and tungsten from the solution resulting from step G.

4,298,582
VANADIUM RECOVERY FROM SCRAP ALLOYS

Jameel Menashi, Lexington; Alkis S. Rappas, Bedford, both of Mass., and Donald A. Douglas, Amherst, N.H., assignors to Cabot Corporation, Kokomo, Ind.

Filed Apr. 15, 1980, Ser. No. 140,569
Int. Cl.[3] C01G *31/00*
U.S. Cl. 423—58 **17 Claims**

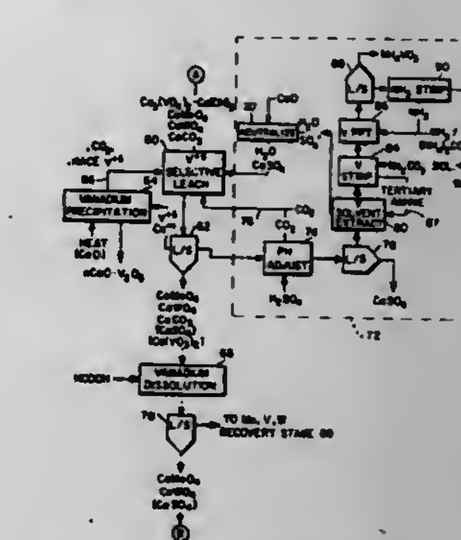

1. A process for partitioning vanadate anions from anions selected from the group consisting of tungstate, molybdate, and mixtures thereof, said anions being in the form of a mixture of alkaline earth metal precipitates, said process comprising the steps of
A. contacting said precipitates with an aqueous acidic solution selected from the group consisting of carbonic acid solution having a superatmospheric CO_2 pressure, formic acid solution, acetic acid solution, and mixtures thereof to selectively dissolve the alkaline earth metal vanadate;
B. separating a substantially tungsten and molybdenum-free solution containing dissolved alkaline earth metal vanadate from the remaining precipitate;
C. treating the alkaline earth metal vanadate solution produced in step B to induce precipitation of vanadium values; and
D. separating the precipitated vanadium values produced in step C from the remaining solution;

4,298,583

PROCESS FOR MANUFACTURING PHOSPHORIC ACID

Armand L. Davister, Liege, Belgium, and Samuel V. Houghtaling, Lakeland, Fla., assignors to Davy Powergas, Inc., Lakeland, Fla.

Filed Nov. 18, 1977, Ser. No. 852,614

Claims priority, application Luxembourg, Nov. 4, 1977, 78457

Int. Cl.^{3} C01F *11/46;* C01B *25/22*

U.S. Cl. 423—167 **22 Claims**

1. In the process for the manufacturer of phosphoric acid by the wet process which comprises

introducing phosphate rock, sulfuric acid and phosphoric acid as feed components into one or more reaction zones of an attack system,

reacting said rock, sulfuric acid and phosphoric acid in said attack system to produce a reaction slurry of an aqueous solution of phosphoric acid and crystallized calcium sulfate as end-products of the process, said attack system having a plurality of reaction zones and comprising a serial and cyclic flow of said slurry through at least some of said reaction zones,

agitating said slurry in each of said plurality of reaction zones, at least one of said plurality of reaction zones being in slurry flow communication with at least one vacuum cooling zone having a pressure lower than the pressure in said at least one reaction zone,

passing a flow of reaction slurry from said at least one reaction zone communicating with said vacuum cooling zone, evaporating water from said slurry in said cooling zone to cool the slurry therein,

returning the resulting cooled flow of slurry from said vacuum cooling zone to said at least one reaction zone,

withdrawing a portion of said reaction slurry from said attack system at a basic slurry flow corresponding to the total feed rate of said feed components to said attack system, separating phosphoric acid and calcium sulfate crystals from said withdrawn portion of slurry, washing said calcium sulfate crystals with water to form a diluted solution of phosphoric acid, collecting a first portion of the separated phosphoric acid and the washed calcium sulfate,

passing to said attack system, as part of said feed components, the remaining portion of said separated phosphoric acid, together with the said diluted phosphoric acid solution, the improvement comprising

maintaining the rates of said flows so that the cyclic flow rate of said slurry is between 300 and 4000% by weight of said basic slurry flow, the flow rate of said slurry passing to said vacuum cooling zone is between 2000 and 4000% of said basic slurry flow, the flow rate of the local agitation in said reaction zones being 500 and 2200% by weight of said basic slurry flow, and the sum of said local agitation flow rates and the cyclic flow rates in each of the reaction zones wherein feed components are introduced which immediately follow them in the direction of the slurry flow through the reactors being not less than 2500% of said basic slurry flow.

4,298,584

REMOVING CARBON OXYSULFIDE FROM GAS STREAMS

Alkis C. Makrides, Newton Center, Mass., assignor to EIC Corporation, Newton, Mass.

Filed Jun. 5, 1980, Ser. No. 156,682

Int. Cl.^{3} B01D *53/34*

U.S. Cl. 423—242 **7 Claims**

1. A process for removing carbon oxysulfide from a gas stream, comprising

contacting said gas stream with a liquid stream comprising a liquid solution of a scrubbing agent comprising copper sulfate buffered to a pH sufficiently acidic to prevent the precipitation of basic copper salts at operating conditions, thereby to react said copper sulfate with said carbon oxysulfide to precipitate copper sulfides, and

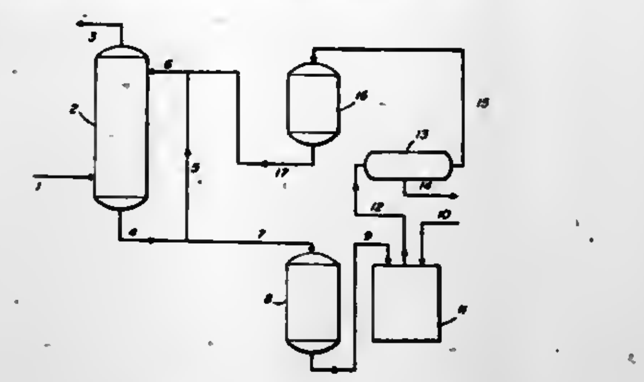

removing at least some of said copper sulfides from said liquid solution.

4,298,585

PROCESS OF MAKING SODIUM PERBORATE

Jean Malafosse, Sassenage; Andre Giron, Toulouse; Herve Olivier, Santenay-les-Bains, and Michel Dupont, Chagny, all of France, assignors to L'Air Liquide, Societe Anonyme pour l'Etude et l'Exploitation des Procedes Georges Claude, Paris, France

Filed Apr. 16, 1980, Ser. No. 140,703

Claims priority, application France, May 3, 1979, 79 11090

Int. Cl.^{3} C01B *15/12*

U.S. Cl. 423—279 **7 Claims**

1. In a process of making sodium perborate hexahydrate crystals comprising reacting hydrogen peroxide with a sodium metaborate solution, the improvement wherein the crystallization of the sodium perborate is performed in the presence of a carboxylic polymer having a high potential content of free carboxylic acid groups, said polymer being a maleic anhydride copolymer with an organic compound having an ethylene bond.

4,298,586

RECOVERY OF HYDROFLUORIC ACID FROM FLUOSILICIC ACID

Subhas K. Sikdar, San Juan Capistrano, Calif., assignor to Occidental Research Corp., Irvine, Calif.

Continuation of Ser. No. 953,803, Oct. 23, 1978, abandoned. This application Aug. 23, 1980, Ser. No. 177,558

Int. Cl.^{3} C01B *33/12, 7/22;* C01D *3/02*

U.S. Cl. 423—339 **28 Claims**

16. A method for recovering hydrogen fluoride and solid amorphous silica from phosphate plant scrub liquor comprising at least 15% by weight fluosilicic acid and at least 1000 parts per million P_2O_5, comprising the steps of:

(a) combining the scrub liquor containing fluosilicic acid with sodium sulfate at about ambient temperature and forming solid sodium fluosilicate in a purification zone;

(b) recovering such sodium fluosilicate;

(c) reacting recovered sodium fluosilicate with sodium carbonate in a precipitation zone to form an alkaline aqueous aqueous slurry comprising silica and dissolved sodium fluoride; wherein during said reaction the pH of the alkaline aqueous slurry is maintained at a value greater than 7 and up to about 9, the water content of the alkaline aqueous slurry is maintained sufficiently low such that the slurry contains solid sodium fluoride, and the temperature of the alkaline aqueous slurry is maintained substantially equal to its boiling point so that an amorphous silica precipitate is formed;

(d) adding sufficient water to the alkaline aqueous slurry in a dissolving zone to dissolve substantially all of the solid sodium fluoride; and thereafter;

(e) separating at least a part of the precipitated amorphous silica from the alkaline aqueous slurry leaving an aqueous solution comprising sodium fluoride;

(f) evaporating water from the aqueous solution comprising sodium fluoride in an evaporation zone to form an aqueous slurry comprising solid sodium fluoride and a solution saturated with respect to sodium fluoride;

(g) recycling at least a portion of evaporated water to the dissolving zone;

(h) passing the aqueous slurry from the evaporation zone to a separation zone and separating the solid sodium fluoride from the solution saturated with respect to sodium fluoride;

(i) introducing at least a portion of the solution saturated with respect to sodium fluoride from the separation zone to the precipitation zone;

(j) reacting solid sodium fluoride separated in the separation zone with sulfuric acid in a hydrogen fluoride generation zone maintained at a temperature of at least about 80° C. to form hydrogen fluoride and sodium sulfate;

(k) introducing at least a portion of the sodium sulfate formed in the hydrogen fluoride generation zone to the purification zone; and

(l) recovering hydrogen fluoride formed in the hydrogen fluoride generation zone.

4,298,587

SILICON PURIFICATION

Vijay K. Kapur, Northridge, Calif., assignor to Atlantic Richfield Company, Los Angeles, Calif.

Filed Oct. 28, 1980, Ser. No. 201,660

Int. Cl.^{3} C01B *33/02;* C25B *1/24*

U.S. Cl. 423—350 **11 Claims**

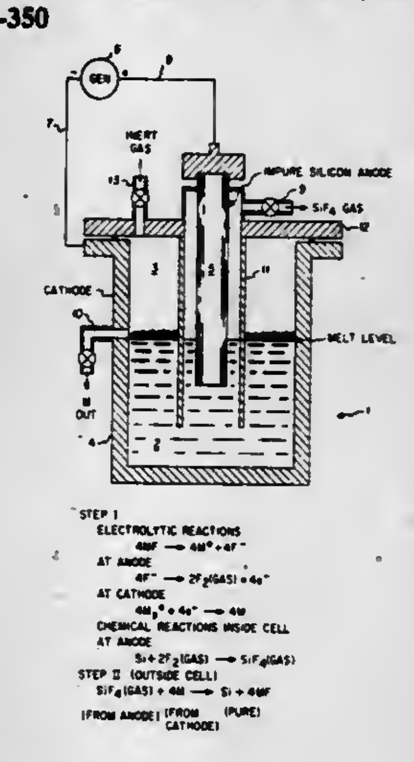

1. In a method for purifying silicon which contains impurities, the improvement comprising providing said impure silicon in electrode form, employing said electrode as the anode in a heated electrolytic cell, said elecytrolytic cell also containing a cathode, an inert atmosphere, and an electrolyte, said electrolyte consisting essentially of an alkali metal fluoride, an alkaline earth metal fluoride, or combinations of two or more thereof, said cell being operated at a temperature and an electrical current and voltage such that elemental fluorine is formed from said electrolyte at said anode and silicon is removed from said anode as vaporous SiF_4, and elemental metal is formed from said electrolyte at said cathode, collecting said SiF_4, separately reacting said collected SiF_4 with an alkali metal, alkaline earth metal, or combination of two or more of such metals to form the fluoride of said metal or metals and purified elemental silicon, and separating said purified silicon from said fluoride.

4,298,588

AMMONIA PRODUCTION PROCESS

Alwyn Pinto, Stockton-on-Tees, England, assignor to Imperial Chemical Industries Limited, London, England

Continuation of Ser. No. 934,259, Aug. 16, 1978, abandoned. This application Dec. 19, 1979, Ser. No. 105,297

Claims priority, application United Kingdom, Aug. 22, 1977, 35096/77; Oct. 27, 1977, 44766/77; Oct. 28, 1977, 44996/77

Int. Cl.^{3} C01C *1/04*

U.S. Cl. 423—359 **12 Claims**

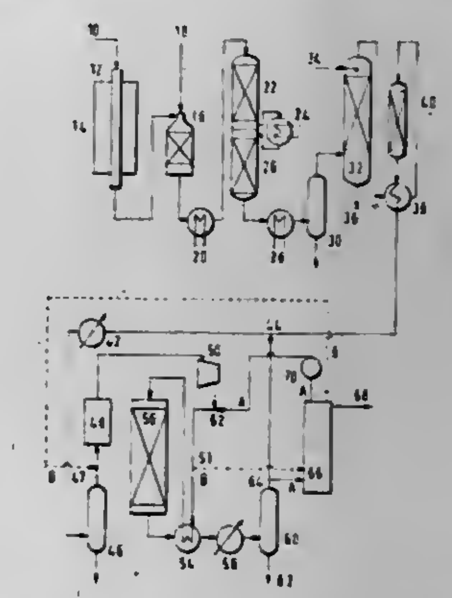

1. An ammonia production process which comprises

(a) primary catalytically reforming at superatmospheric pressure a hydrocarbon feedstock with steam to give a gas containing carbon oxides, hydrogen and methane;

(b) secondary catalytically reforming the gas from step (a) by introducing air and bringing the mixture towards equilibrium, whereby to produce a gas containing nitrogen, carbon oxides, hydrogen and a decreased quantity of methane;

(c) converting carbon monoxide catalytically with steam to carbon dioxide and hydrogen;

(d) removing carbon oxides to give a nitrogen-hydrogen ammonia synthesis gas and compressing said gas to ammonia synthesis pressure;

(e) reacting the synthesis gas to produce ammonia and recovering ammonia from the reacted gas; and

(f) discarding non-reactive gases present in the synthesis gas;

and is characterized by:

(i) operating step (a) at a pressure of 40–80 bar absolute and in conditions of steam-to-carbon ratio and temperature to produce a gas containing at least 10% v/v methane and using in step (b) a quantity of air in excess of what would introduce 1 molecule of nitrogen per 3 molecules of hydrogen;

(ii) in step (d) compressing said ammonia synthesis gas including excess nitrogen resulting from said use of excess air in step (i) by no more than 100 bar; and

(iii) treating a side stream of synthesis gas after reaction to synthesise ammonia to separate a stream enriched in hydrogen and returning the enriched stream to the synthesis.

4,298,589

SPLIT AXIAL FLOW CONVERTER IN AMMONIA SYNTHESIS

Joseph R. LeBlanc, and Robert B. Peterson, both of Houston, Tex., assignors to The M. W. Kellogg Company, Houston, Tex.

Filed Jun. 17, 1980, Ser. No. 160,358

Int. Cl.^{3} C01C *1/04*

U.S. Cl. 423—359 **2 Claims**

1. A process for the production of ammonia which comprises:

compressing an ammonia synthesis gas containing H_2 and N_2 to a pressure of between 45 and 80 atmospheres;
introducing said ammonia synthesis gas in two equal streams to an ammonia converter, one stream of said ammonia synthesis gas introduced to the bottom of said converter and the other stream of said ammonia synthesis gas introduced to the top of said converter, each stream passing

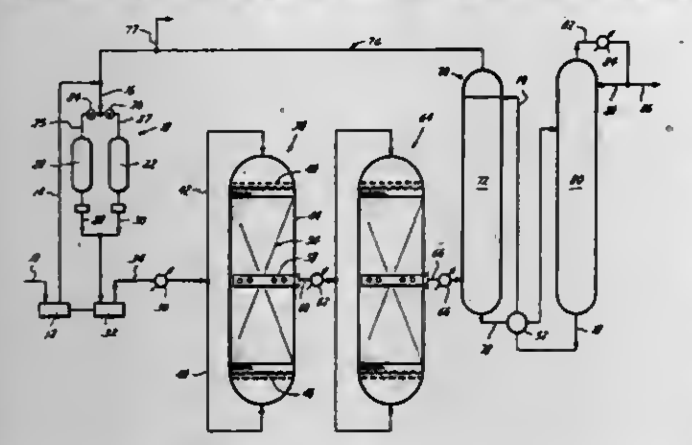

through a substantially equal bed of ammonia synthesis catalyst which extends to the outer wall of said converter;
reacting said H_2 and N_2 in said catalyst bed at a pressure less than 80 atmospheres to form a product gas containing ammonia, H_2 and N_2; and
removing said product gas from the middle portion of said converter.

4,298,590
DETECTION OF MALIGNANT TUMOR CELLS
Samuel Bogoch, 46 E. 91st St., New York, N.Y. 10028
Continuation-in-part of Ser. No. 553,075, Feb. 25, 1975, which is a continuation-in-part of Ser. No. 550,432, Feb. 18, 1975, abandoned, and Ser. No. 450,404, Mar. 12, 1974, abandoned, and Ser. No. 385,451, Aug. 3, 1973, abandoned. This application Jul. 7, 1978, Ser. No. 922,799
Int. Cl.³ A61K *49/00, 43/00;* **G01N** *33/48*
U.S. Cl. 424—1 **17 Claims**

1. A process for detecting the presence of cancerous or malignant tumor cells in a cell collection, comprising applying to said cell collection anti-cancer RECOGNIN or a purified fraction thereof, whereby said anti-cancer RECOGNIN or purified fraction thereof preferentially attaches to cancerous cells and can thereby be detected by attached visible or signal-emitting means, said cancer RECOGNIN comprising a product, derived from cancerous tumor tissue or cells, characterized by forming a single line precipitate with its specific antibody in quantitative precipitin tests and Ouchterlony gel diffusion tests, being soluble in water and aqueous solutions having an acid or neutral pH, and insoluble at alkaline pH, having a spectrophotometric absorption peak wave length of 280 mu and a molecular weight of from about 3,000 to about 25,000, and further characterized by having an amino acid residue composition characterized by high proportions of glutamic and aspartic acids and high ratios of glutamic and aspartic acids to histidine.

4,298,591
INSTANTANEOUS RADIOIODINATION OF ROSE BENGAL AT ROOM TEMPERATURE AND A COLD KIT THEREFOR
Harold A. O'Brien, Jr., Los Alamos, N. Mex.; Homer B. Hupf, Sausolito, Calif., and Philip M. Wanek, Los Alamos, N. Mex., assignors to The United States of America as represented by the United States Department of Energy, Washington, D.C.
Filed Apr. 3, 1979, Ser. No. 26,509
Int. Cl.³ A61K *49/00, 43/00;* **G01T** *1/00;* **B65D** *71/00*
U.S. Cl. 424—1 **12 Claims**

1. A method for radioiodinating rose bengal comprising the steps of:
placing rose bengal and a suitable oxidizing agent in acidified ethanol;
stirring the solution resulting until it forms a uniform suspension;
adding an iodide in which the iodine moiety is radioactive; and
allowing the resulting mixture to stand for a time sufficient for the exchange label reaction to occur.

4,298,592
DOUBLE ANTIBODY SEPARATION METHOD
Wayne H. T. Lin, Chesterfield; James J. Grib, and Larry D. Mosier, both of St. Louis, all of Mo., assignors to Mallinckrodt, Inc., St. Louis, Mo.
Filed Apr. 5, 1979, Ser. No. 27,387
Int. Cl.³ G01N *33/48;* **G01T** *1/00;* **A61K** *43/00;* **B65D** *71/00*
U.S. Cl. 424—1 **9 Claims**

1. A double antibody radioimmunoassay method for determining antigens in a sample, comprising providing polyethylene glycol having a molecular weight of from about 200 to about 10,000 in a reaction medium containing labeled antigen, said polyethylene glycol being present in said reaction medium in an amount sufficient to accelerate an immunoprecipitation reaction between water-soluble first antibodies in a first antibody reagent bound to antigens and water-soluble antibodies in a second antibody reagent which are not specific to said antigens to be assayed but which are specific to said first antibodies.

4,298,593
REAGENTS AND METHODS UTILIZING LABELED FAB BOUND TO ANTIGENS
Chung-Mei Ling, Chicago, Ill., assignor to Abbott Laboratories, North Chicago, Ill.
Filed Aug. 21, 1979, Ser. No. 68,772
Int. Cl.³ A61K *43/00;* **G01N** *33/48;* **G01T** *1/00*
U.S. Cl. 424—1 **4 Claims**

1. An immunoassay reagent comprising a solution of an antigen having a plurality of antigenic binding sites wherein a portion of the binding sites are immunochemically bound to labeled Fab and other immunochemically binding sites are available for binding to antibodies.

4,298,594
XENOBIOTIC DELIVERY VEHICLES, METHOD OF FORMING THEM AND METHOD OF USING THEM
Barry Sears, Marblehead, and David W. Yesair, Newbury, both of Mass., assignors to Arthur D. Little, Inc., Cambridge, Mass.
Continuation-in-part of Ser. No. 896,311, Apr. 14, 1978. This application Apr. 4, 1980, Ser. No. 137,312
Int. Cl.³ A61K *9/22, 9/42, 9/52*
U.S. Cl. 424—19 **128 Claims**

33. A method of forming a delivery vehicle for delivering to and releasing within the aqueous environment of a mammalian host a xenobiotic, the pharmacodynamics of which are predeterminably altered and controlled comprising forming microreservoirs of a composition comprising a phospholipid constituent and a phospholipid-immiscible lipid constituent present in an amount exceeding that which is miscible with said phospholipid constituent to form said microreservoirs having a structure in which contact between said phospholipid-immiscible lipid constituent and said aqueous environment is minimized to impart to said delivery vehicle said microreservoirs being in nonvesicular form having diameters ranging between about 250 A and about 1000 A, vesicular form having diameters ranging between about 190 A and about 300 A, or both nonvesicular and vesicular forms.

4,298,595
PHARMACEUTICAL PREPARATIONS CONTAINING A POLYMERIC AGENT FOR RELEASING 5-AMINOSALICYLIC ACID OR ITS SALTS INTO THE GASTROINTESTINAL TRACT
Thomas M. Parkinson; Joseph P. Brown, and Robert E. Wingard, Jr., all of Palo Alto, Calif., assignors to Dynapol, Palo Alto, Calif.
Division of Ser. No. 971,609, Dec. 20, 1978, Pat. No. 4,190,716. This application Nov. 29, 1979, Ser. No. 95,411
Int. Cl.³ A61K *31/74*
U.S. Cl. 424—78 **38 Claims**

1. A pharmaceutical formulation for the treatment of the mucosa of the mammalian lower intestinal tract comprising an amount therapeutically effective for such treatment of a polymeric compound which itself comprises a pharmacologically acceptable organic polymer backbone comprising a plurality of aromatic rings and having a molecular size which precludes the backbone's absorption from the intestinal lumen and a plurality of salicyclic acid or pharmaceutically acceptable salicylate salt groups covalently bonded to said backbone via azo groups that are intermediate backbone aromatic carbons and said salicyclic acid or pharmaceutically acceptable salicylate salt 5-position carbons in association with a pharmaceutically acceptable carrier therefor.

4,298,596
***TRYPANOSOMA CRUZI* GLYCOPROTEIN VACCINE FOR INDUCING IMMUNITY TO CHAGAS' DISEASE**
David Snary, Orpington, England, assignor to Burroughs Wellcome Co., Research Triangle Park, N.C.
Filed Mar. 26, 1980, Ser. No. 134,262
Claims priority, application United Kingdom, Mar. 29, 1979, 11049/79
Int. Cl.³ A61K *39/005*
U.S. Cl. 424—88 **4 Claims**

1. A vaccine for inducing immunity to Chagas' disease comprising an antigen obtained from T. Cruzi organisms comprising glycoprotein of molecular weight from about 6×10^4 to about 9.5×10^4, said glycoprotein being substantially insoluble in water and being capable of interacting with lectins which have an affinity for glucose, mannose or galactose, said antigen being substantially free from non-proteinaceous matter and a pharmaceutically acceptable carrier therefor.

4,298,597
VACCINE FOR DIARRHEA CAUSED BY *E. COLI*
Stephen D. Acres, and Robert A. Kapitany, both of Saskatoon, Canada, assignors to University of Saskatchewan, Saskatoon, Canada
Filed Sep. 4, 1979, Ser. No. 71,994
Int. Cl.³ A61K *39/108, 39/116*
U.S. Cl. 424—92 **21 Claims**

1. A vaccine for promoting in cattle the formation of antibodies against antigens from enterotoxigenic *E. coli* comprising an aqueous suspension or solution containing an effective amount of K99 antigen, polysaccharide K antigens, lipopolysaccharide O antigens, enterotoxins, or combinations of the foregoing constituents, said vaccine lacking whole intact cells, but containing cell fragments and other cellular and culture broth constituents having a molecular weight greater than 1000; said vaccine being prepared by a method comprising:
(a) growing several selected enterotoxigenic strains of *E. coli* in a broth culture medium under aerobic conditions, with agitation;
(b) pooling the *E. coli* cultures;
(c) disrupting the bacteria by input of energy for removal of cell wall polysaccharide outer layers and pili;
(d) removing intact cells from the disrupted suspension; and
(e) selectively concentrating the subcellular antigens for removal of undesired low molecular weight components and excess water by passing the suspension through an ultrafiltration membrane.

12. A method of preventing neonatal diarrhea in calves comprising the step of administering to the pregnant cow prior to parturition a vaccine containing an effective amount of K99 antigen, polysaccharide K antigens, lipopolysaccharide O antigens, enterotoxins, or combinations of the foregoing constituents, said vaccine lacking whole intact cells, but containing cell fragments and other cellular and broth constituents having a molecular weight greater than 1000, in combination with a suitable adjuvant, said effective amount of vaccine inducing in the cow effective colostral levels of antibodies against said antigens from enterotoxigenic *E. coli*; said vaccine being prepared by a method comprising:
(a) growing several selected enterotoxigenic strains of *E. coli* in a broth culture medium under aerobic conditions, with agitation;
(b) pooling the *E. coli* cultures;
(c) disrupting the bacteria by input of energy for removal of cell wall polysaccharide outer layers and pili;
(d) removing intact cells from the disrupted suspension; and
(e) selectively concentrating the subcellular antigens for removal of undesired low molecular weight components and excess water by passing the suspension through an ultrafiltration membrane.

4,298,598
TISSUE ADHESIVE
Otto Schwarz; Yendra Linnau; Franz Löblich, and Thomas Seelich, all of Vienna, Austria, assignors to Immuno Aktiengesellschaft für chemisch-medizinische Produkte, Vienna, Austria
Filed Feb. 4, 1980, Ser. No. 118,656
Claims priority, application Austria, Feb. 15, 1979, 1190/79
Int. Cl.³ A61K *35/14, 37/00*
U.S. Cl. 424—101 **5 Claims**

1. A tissue adhesive comprising plasma proteins of human or animal origin, which plasma proteins contain: factor XIII in an amount of at least 7 units/ml, fibrinogen in an amount of at least 70 mg/ml, the ratio of factor XIII to fibrinogen, expressed in units of factor XIII per gram of fibrinogen, amounting to at least 100; cold-insoluble globulin and albumin, the ratio of fibrinogen to cold-insoluble globulin to albumin being 60 to 98: 0.5 to 20: 0 to 15; aprotinin in an amount of 20 to 2,000 KIU per ml, wherein the tissue adhesive as determined according to the SDS-polyacrylamide-gel-electrophoresis method is capable of complete cross-linking of the fibrin-γ-chains after 3 to 5 minutes of incubation and of at least 35% cross-linking of the fibrin-α-chains after two hours of incubation.

4,298,599
NOVEL ANTIBIOTIC BN-235 SUBSTANCE, AND PROCESS FOR THE PRODUCTION THEREOF
Shoichi Amano, Kawasaki; Shinji Miyadoh, Yokohama; Saeko Takahashi, Tokyo; Norio Ezaki, Yokohama; Tomizo Niwa, Yokohama, and Yujiro Yamada, Yokohama, all of Japan, assignors to Meiji Seika Kaisha, Ltd., Tokyo, Japan
Filed Sep. 12, 1980, Ser. No. 186,793
Claims priority, application Japan, Sep. 12, 1979, 54-116200
Int. Cl.³ A61K *35/00*
U.S. Cl. 424—119 **2 Claims**

1. An antibiotic BN-235 substance, the hydrochloride of which has the following properties:
Elemental analysis values:
Carbon 55.44%
Hydrogen 6.41%
Nitrogen 9.02%
Chlorine 12.01%
Oxygen 17.12% (balance)
Molecular weight: about 520 (by the vapor pressure method)
Melting point: 230° to 232° C. (decomp.)
Ultraviolet absorption spectrum: shown in FIG. 1

Infrared absorption spectrum: Absorption bands at 3420, 2960, 1670, 1520, 1480, 1460, 1430, 1390, 1330, 1250, 1200, 1160, 1100, 1080, 1060, 1005, 980, 950, 850, 780, 740 cm^{-1} and absorption spectrum as shown in FIG. 2 as determined using the KBr tablet method,
Color reactions:
Positive: ninhydrin and Lemieux
Negative: Sakaguchi and ferric chloride
Color and form: yellow powder
Solubility: soluble in methanol, ethanol, acetone and water, and insoluble in ether, n-hexane and petroleum ether
Specific rotation:
$[\alpha]_D^{25} = -77.8$ (C=1, methanol)
Stability: stable at a pH of 2 to 6
Rf values in thin-layer chromatography (silica gel):
Chloroform-methanol (4:1) 0.73
n-Butanol-acetic acid-water (2:1:1) 0.64
Distinction among acidity, neutrality and basicity: basic.

4,298,600
ANTIBIOTIC C-14482 A_1 AND METHOD FOR PRODUCING SAME
Eiji Higashide, Takarazuka; Seiichi Tanida, Kyoto; Masayuki Muroi, Naganohigashi, and Mitsuko Asai, Takatsuki, all of Japan, assignors to Takeda Chemical Industries, Ltd., Japan
Filed Aug. 2, 1978, Ser. No. 930,317
Claims priority, application Japan, Aug. 4, 1977, 52-93875
Int. Cl.³ C12P *1/04*
U.S. Cl. 424—120 2 Claims

1. Antibiotic C-14482 A_1 which has the following properties:
(I) Elemental analysis: (%) C, 58.02, 59.18; H, 5.84, 5.70; N, 16.32, 17.14;
(II) Melting point: Not less than 300° C.
(III) Specific rotation: $[\alpha]_D^{24.5} + 150° \pm 30°$ (c=0.05, ethanol)
(IV) Ultraviolet absorption spectrum:
λ_{max}^{MeOH} ($E_{1cm}^{1\%}$) 214 nm±2(503±50)
λ_{max}^{MeOH} ($E_{1cm}^{1\%}$) 281 nm±2(209±10)
λ_{max}^{MeOH} ($E_{1cm}^{1\%}$) 498 nm±2(46.0±5)
(V) Infrared absorption spectrum (KBr): Principal peaks (cm^{-1}) 3430, 3175, 2940, 2890, 2850, 1680, 1650, 1625, 1600, 1455, 1390, 1345, 1250, 1170, 1140, 1110, 1075, 1025, 995, 935, 910, 825
(VI) Solubility:
Practically insoluble: Hexane, petroleum ether
Sparingly soluble: Ethanol, butanol, ethyl acetate, water
Soluble: Methanol, chloroform
(VII) Color reactions: Negative: Sakaguchi reaction, Barton reaction, Potassium permanganate declorized,
(VIII) Acidity, neutrality or basicity: Weakly basic,
(IX) Color of crystals: Dark red to reddish brown,
(X) Molecular weight: 4.6×10^2 (measured by Vapor pressure osmometry in $CH_3COOC_2H_5$).

2. A method for producing Antibiotic C-14482 A_1 which comprises cultivating a microorganism which belongs to the genus Nocardia sp. No. C-14482 (ATCC-31309) and is capable of producing Antibiotic C-14482 A_1 in a culture medium, whereby Antibiotic C-14482 A_1 is elaborated and accumulated in said culture medium and recovering the antibiotic.

4,298,601
METHOD AND FORMULATIONS FOR THE TREATMENT OF OBESITY
Alan N. Howard, Cambridge, England, assignor to Technutra, S.A., Luxembourg
Continuation of Ser. No. 693,599, Jun. 7, 1976, abandoned, which is a division of Ser. No. 338,257, Mar. 5, 1973, Pat. No. 4,009,265. This application Jul. 24, 1978, Ser. No. 927,494
Claims priority, application United Kingdom, Mar. 6, 1972, 10439/72
The portion of the term of this patent subsequent to Feb. 22, 1994, has been disclaimed.
Int. Cl.³ A01N *9/00, 9/28;* A23L *1/30;* A23J *3/00*
U.S. Cl. 424—128 42 Claims

1. A dietary formulation for the treatment of obesity in man, which comprises:
(a) all the minerals required by man;
(b) material which is a source of aminoacids selected from at least one member of the class consisting of:
(i) a mixture of monomeric L-aminoacids, and
(ii) natural proteins, and
(iii) natural proteins reinforced with at least one monomeric L-aminoacid;
and (c) digestible carbohydrate;
characterized in that a smallest amount of the dietary formulation containing at least the minimum daily requirements of each of the minerals required by man, including at least 800 mg calcium, 800 mg phosphorus, 140 μg iodine, 10 mg iron and 350 mg magnesium, also contains
(A) at least 15 g of said material which must include at least the minimum daily requirements for man of all the essential L-aminoacids required by man; and
(B) from 15 g to 75 g of said carbohydrate;
and further characterized in that the total caloric value of said smallest amount of the dietary formulation is in the range of from 160 Kcals to 600 Kcals.

4,298,602
HETEROCYCLIC SUBSTITUTED TRIAZOLYL PHOSPHOROUS COMPOUNDS AND THEIR USE AS INSECTICIDES
Chester E. Pawloski, Bay City, Mich., assignor to The Dow Chemical Company, Midland, Mich.
Continuation-in-part of Ser. No. 951,923, Oct. 13, 1978, abandoned. This application Oct. 15, 1979, Ser. No. 84,697
Int. Cl.³ C07D *213/02, 215/02*
U.S. Cl. 424—200 66 Claims

1. A compound corresponding to the

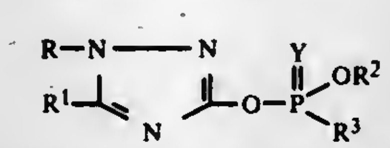

wherein R represents a nitrogen containing heterocyclic radical corresponding to one of the formulae

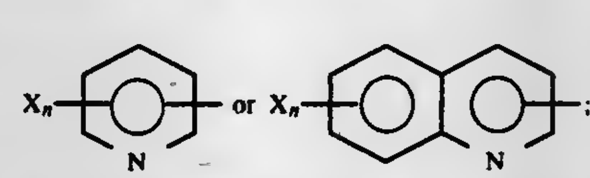

each X independently represents chloro, fluoro, bromo, nitro, alkyl of 1 to 4 carbon atoms, amino, mono- or dialkylamino wherein each alkyl group independently contains from 1 to 4 carbon atoms, alkoxy of 1 to 4 carbon atoms, alkylthio of 1 to 4 carbon atoms, alkylsulfinyl of 1 to 4 carbon atoms, alkylsulfonyl of 1 to 4 carbon atoms, cyano, trifluoromethyl, trichloromethyl, phenoxy or substituted phenoxy of the formula

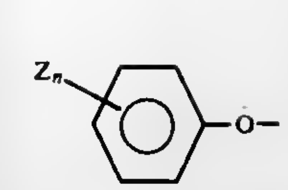

wherein each Z independently represents chloro, fluoro, bromo, nitro, cyano, alkoxy of 1 to 4 carbon atoms or alkylthio of 1 to 4 carbon atoms, with the proviso that when either n is 2 or 3, all X groups are sterically compatible with each other and all Z groups are sterically compatible with each other; Y represents oxygen or sulfur; each n can independently represent an integer of from 0 to 3, inclusive; R^1 represents hydrogen, chloro, fluoro, bromo, alkyl of 1 to 4 carbon atoms, cycloalkyl of 3 to 6 carbon atoms, phenyl, phenylthio, alkoxy of 1 to 4 carbon atoms, alkylthio of 1 to 4 carbon atoms, alkylsulfinyl of 1 to 4 carbon atoms, alkylsulfonyl of 1 to 4 carbon atoms, thiocyanato, trifluoromethyl, trichloromethyl, amino, mono- or dialkylamino wherein each alkyl group independently contains from 1 to 4 carbon atoms; R^2 represents methyl, ethyl, propyl or isobutyl and R^3 represents methoxy, ethoxy, propoxy, ethyl, mono- or dialkylamino wherein each alkyl group independently contains from 1 to 4 carbon atoms, alkylthio of 1 to 4 carbon atoms or phenyl.

4,298,603
O-AMINOALKYLSALICYLATES
Ching-Te Chang, Taipei, and Tsung-Tsan Su, Hsinchu, both of Taiwan, assignors to Industrial Technology Research Institute, Taiwan
Filed Dec. 6, 1979, Ser. No. 100,891
Int. Cl.³ A61K *31/615;* C07C *101/42*
U.S. Cl. 424—230 8 Claims

1. A compound of the formula

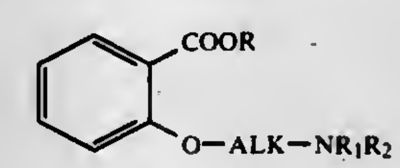

wherein R is C_4-C_{14} alkyl, ALK is a lower alkylene radical, R_1 and R_2 are the same or different and are hydrogen or lower alkyl, R_1 and R_2 taken together form a 5-7 atom ring which includes 1-2 nitrogen atoms, the other ring members being carbon atoms, and the pharmaceutically acceptable acid addition salts thereof.

7. A method for topical local anesthesia which comprises administering topically an effective amount of a compound or acid addition salt as defined in any one of claims 1 to 6 in the presence of an inert carrier.

8. A topical local anesthetic pharmaceutical composition comprising an effective amount of a compound or an addition salt as defined in any one of claims 1 to 6 and a pharmaceutically acceptable carrier.

4,298,604
CLOTRIMAZOLE-BETAMETHASONE DIPROPIONATE COMBINATION
Susan B. Hammell, Berkeley Heights, N.J., assignor to Schering Corporation, Kenilworth, N.J.
Filed Oct. 6, 1980, Ser. No. 194,524
Int. Cl.³ A61K *31/56, 31/58*
U.S. Cl. 424—240 6 Claims

1. A pharmaceutical composition comprising about 0.001 to about 0.33 percent by weight betamethasone dipropionate and about 0.01 to about 10 percent by weight clotrimazole, wherein the ratio of clotrimazole to betamethasone dipropionate ranges from about 10 to about 30 to 1, in a pharmaceutically acceptable carrier.

4,298,605
CEPHALOSPORIN DERIVATIVES
Nobuhiro Oi, Hoya; Bunya Aoki, Tama; Teizo Shinozaki, Matsudo; Kanji Moro, Kuki; Isao Matsunaga; Takao Noto, both of Tokyo; Toshiyuki Nebashi, Kawagoe; Yusuke Harada, Tokyo; Hisao Endo, Yokohama; Takao Kimura, Chiba; Hiroshi Okazaki, Sayama; Haruki Ogawa, Chofu, and Minoru Shindo, Tokyo, all of Japan, assignors to Chugai Seiyaku Kabushiki Kaisha, Tokyo, Japan
Filed Jun. 11, 1979, Ser. No. 47,781
Claims priority, application Japan, Jun. 22, 1978, 53-74868; Sep. 11, 1978, 53-110627; Apr. 26, 1979, 54-50841
Int. Cl.³ C07D *501/36*
U.S. Cl. 424—246 9 Claims

1. A cephalosporin derivative represented by the formula

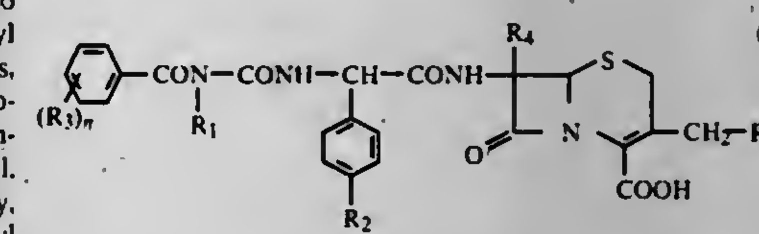

(I)

wherein R_1 is a hydrogen atom or a lower alkyl group; R_2 is a hydrogen atom or a hydroxyl group; R_3 is a hydroxyl group or a lower alkanoyloxyl group; n is 2 or 3; at least two of R_3 are bonded to adjacent carbon atoms, the position of substituent R_3 being selected from 3 to 5 position when R_1 is a lower alkyl group and R_3 is a hydroxyl group, and 2 to 6 position when R_1 and R_3 are other substituents; R_4 is a hydrogen atom; and R_5 is —S—R_6 (wherein R_6 is a five-membered heterocyclic ring selected from the group consisting of 1,3,4-thiadiazole, triazole and tetrazole, each of which is unsubstituted or substituted with a lower alkyl group) or a pharmaceutically acceptable salt thereof.

4,298,606
THIAZOLYLACETAMIDO COMPOUNDS
Michihiko Ochiai, Osaka; Taiiti Okada, Kyoto; Osami Aki, Hyogo; Akira Morimoto; Kenji Kawakita, both of Osaka, and Yoshihiro Matsushita, Hyogo, all of Japan, assignors to Takeda Chemical Industries, Ltd., Osaka, Japan
Division of Ser. No. 900,233, Apr. 26, 1978, abandoned, which is a continuation-in-part of Ser. No. 642,356, Dec. 19, 1975, Pat. No. 4,098,888. This application Aug. 28, 1979, Ser. No. 71,032
Int. Cl.³ C07D *501/20*
U.S. Cl. 424—246 20 Claims

1. A member selected from the group consisting of
(a) a cephem compound of the formula

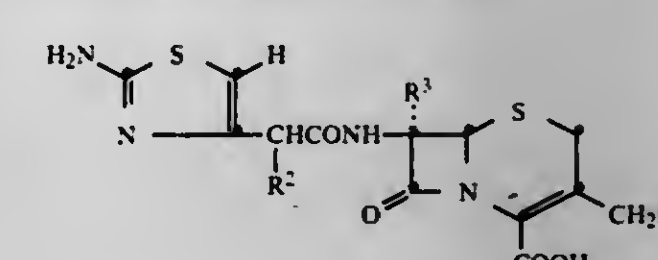

wherein R^2 represents amino, hydroxy or the group

$$\begin{array}{c}-\mathrm{CH}-\\ |\\ R^2\end{array}$$

represents a group of the formula

$$\begin{array}{c}-\mathrm{C}-\\ \|\\ \mathrm{NR}^5\end{array}$$

wherein R^5 is hydroxy or lower alkoxy, R^3 represents hydrogen or methoxy, and R^4 represents hydrogen or acetoxy,

(b) a pharmaceutically acceptable salt thereof, and

(c) a pharmaceutically acceptable ester of the 4-position carboxy group selected from the group consisting of alkoxymethyl, α-alkoxyethyl, α-alkoxy-α-substituted methyl, alkylthiomethyl, pivaloyloxymethyl and α-acetoxybutyl esters.

4,298,607

CRYSTALLINE SALT OF 7β-[2-(2-AMINOTHIAZOL-4-YL)-(Z)-2-METHOXYIMINOACETAMIDO]-3-[(1-METHYL-1H-TETRAZOL-5-YL)THIOMETHYL]CEPH-3-EM-4-CARBOXYLIC ACID AND HCL OR HBR

Hideaki Natsugari, Hyogo; Iwao Mikami, Osaka, and Michihiko Ochiai, Senriyamahigashi, all of Japan, assignors to Takeda Chemical Industries, Ltd., Osaka, Japan

Filed Dec. 11, 1979, Ser. No. 102,525

Claims priority, application Japan, Dec. 11, 1978, 53-153377

Int. Cl.³ A61K *31/545;* C07D *501/56*

U.S. Cl. 424—246 **2 Claims**

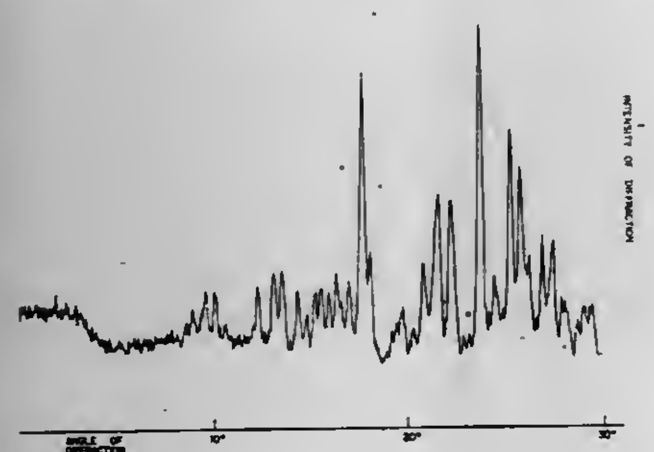

1. A crystalline hemi-acid salt which salt comprises 7β-[2-(2-aminothiazol-4-yl)-(Z)-2-methoxyiminoacetamido]-3-[(1-methyl-1H-tetrazol-5-yl)thiomethyl]ceph-3-em-4-carboxylic acid and HCl or HBr, of which the HCl or HBr content is a half mole per one mole of the former carboxylic acid.

2. An antibiotic composition in solid form which comprises a crystalline hemi-acid salt as defined in claim 1 and a nontoxic alkali salt selected from the group consisting of sodium carbonate, sodium hydrogen carbonate and trisodium phosphate.

4,298,608

METHOD FOR BLOCKING HIGH FREQUENCY NERVE STIMULATION

George A. Condouris, Glen Ridge, N.J.; John Yelnosky, Warrington, Pa.; Richard L. Riley, North Wales, Pa.; Chong M. Won, Warrington, Pa.; George H. Douglas, Malvern, Pa., and William L. Studt, Harleysville, Pa., assignors to William H. Rorer, Inc., Fort Washington, Pa.

Continuation of Ser. No. 959,858, Nov. 13, 1978, Pat. No. 4,198,408. This application Apr. 11, 1980, Ser. No. 139,484

The portion of the term of this patent subsequent to Apr. 15, 1997, has been disclaimed.

Int. Cl.³ A61K *31/53*

U.S. Cl. 424—249 **4 Claims**

1. A method which comprises selectively blocking the conduction of high frequency nerve impulses without substantially affecting the transmission of single impulse nerve conduction by exposing living nerve fiber to an effective amount of a compound of the formula

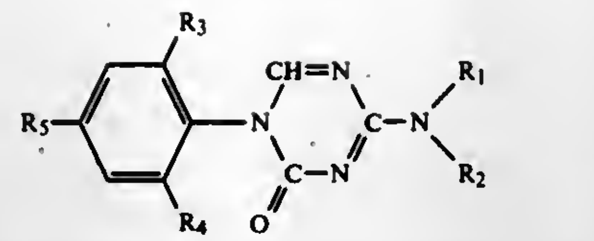

wherein R_1 and R_2 are each lower alkyl, hydrogen, aralkyl, hydroxy lower alkyl or lower alkoxy; R_3 and R_4 are each separately lower alkyl of 1 to 6 carbon atoms or halo and R_5 is hydrogen, halo, lower alkyl, lower alkenyl, lower alkoxy or hydroxy lower alkyl; with the proviso that the total number of carbon atoms in R_1, R_2, R_3 and R_4 taken together is at least four and no more than about 20; together with the pharmaceutically acceptable salts thereof.

4. A method for treating physiological disorders in mammalian species characterized by aberrant high frequency discharge of nerve fiber which comprises modifying the nerve impulse conductivity by administering to a patient in need of such therapy an effective amount of a compound of the formula:

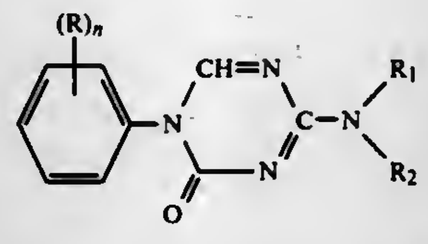

wherein R_1 and R_2 are each lower alkyl, aralkyl, hydroxy lower alkyl of lower alkoxy; R is each separately lower alkyl of 1 to 6 carbon atoms, halo, lower alkenyl, lower alkoxy or hydroxy lower alkyl; and n is 1-3; together with the pharmaceutically acceptable salts thereof.

4,298,609

4,5-DIHYDRO-6-(4-PYRIDINYL)-3-PYRIDAZINOL AND SALTS, THEIR PREPARATION AND USE AS BLOOD PRESSURE LOWERING AGENTS

George Y. Lesher, Schodack, and William B. Dickinson, Albany, both of N.Y., assignors to Sterling Drug Inc., New York, N.Y.

Filed Aug. 30, 1979, Ser. No. 71,064

Int. Cl.³ A61K *31/50;* C07D *237/22*

U.S. Cl. 424—250 **7 Claims**

1. The method for lowering blood pressure in a patient having elevated blood pressure which comprises administering orally or parenterally in a solid or liquid dosage form to such patient a blood pressure lowering effective amount of 4,5-dihydro-6-(4-pyridinyl)-3-pyridazinol or pharmaceutically-acceptable acid-addition salt thereof.

2. 4,5-Dihydro-6-(4-pyridinyl)-3-pyridazinol or pharmaceutically-acceptable acid-addition salt thereof.

4,298,610

ESTER DERIVATIVES OF QUINOLOPYRAN-4-ONE-2-CARBOXYLIC ACIDS AND ANTIALLERGIC ANTASTHMATICS

Yasubiro Morinaka, Ami, and Kazuo Takahashi, Ibaragi, both of Japan, assignors to Mitsubishi Yuka Pharmaceutical Co., Ltd., Tokyo, Japan

Filed May 30, 1979, Ser. No. 43,906

Claims priority, application Japan, Jun. 5, 1978, 53/67448

Int. Cl.³ C07D *491/04;* A61K *31/47*

U.S. Cl. 424—256 **9 Claims**

1. An ester derivative of quinolopyran-4-one-2-carboxylic acids which is represented by the formula [I] or a tautomer thereof

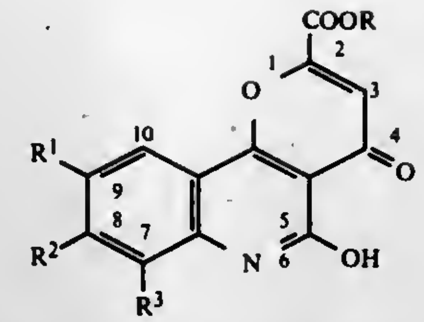

[I]

wherein, R^1, R^2 and R^3 each stand for hydrogen, an alkyl group having 1 to 5 carbon atoms, an alkoxyl group having 1 to 5 carbon atoms, benzyloxy group, a halogen atom, an alkoxycarbonyl group having 2 to 6 total carbon atoms, an aryl group having 6 to 10 carbon atoms, or an alkylenedioxy group having 1 to 3 carbon atoms formed by two alkoxyl groups which are selected from R^1, R^2 and R^3 and bonded together, respectively; and R is an alcohol residue having 5 or 6 carbon atoms selected from the group consisting of 3-methyl-1-butyl, 2-methyl-1-butyl, 2,2-dimethyl-1-propyl, 2-pentyl, 3-pentyl, n-hexyl, 4-methyl-1-pentyl, 2-methyl-1-pentyl, 3-methyl-1-pentyl, 4-methyl-2-pentyl, 2-hexyl, 3-hexyl, and 3-methyl-2-pentyl.

5. An antiallergic composition for asthma which comprises an effective amount for the treatment of allergic asthma of an ester derivative of quinolopyran-4-one-2-carboxylic acids represented by the general formula [I] or a tautomer of the ester derivative,

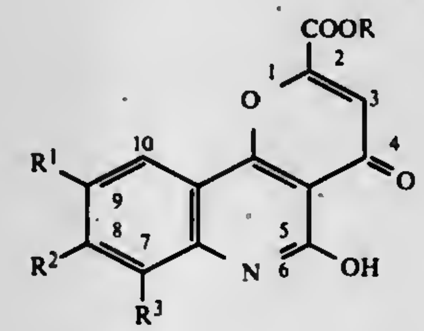

[I]

wherein R^1, R^2 and R^3 each stand for hydrogen, an alkyl group having 1 to 5 cargon atoms, an alkoxy group having 1 to 5 carbon atoms, benzyloxy group, a halogen atom, an alkoxycarbonyl group having 2 to 6 total carbon atoms, an aryl group having 6 to 10 carbon atoms, or an alkylenedioxy group having 1 to 3 carbon atoms formed by two alkoxyl groups which are selected from R^1, R^2 and R^3 and bonded together, respectively; and R is an alcohol residue having 5 or 6 carbon atoms selected from the group consisting of 3-methyl-1-butyl, 2-methyl-1-butyl, 2,2-dimethyl-1-propyl, 2-pentyl, 3-pentyl, n-hexyl, 4-methyl-1-pentyl, 2-methyl-1-pentyl, 3-methyl-1-pentyl, 4-methyl-2-pentyl, 2-hexyl, 3-hexyl and 3-methyl-2-pentyl; and a pharmaceutically acceptable carrier.

4,298,611

PROCESS FOR REDUCING BLOOD PRESSURE IN ANIMALS

John D. Fernstrom, Boston, and Alan F. Sved, Brighton, both of Mass., assignors to Massachusetts Institute of Technology, Cambridge, Mass.

Filed Apr. 24, 1978, Ser. No. 898,741

Int. Cl.³ A61K *31/48*

U.S. Cl. 424—261 **2 Claims**

1. The process for reducing blood pressure in an animal suffering from high blood pressure which comprises administering a compound selected from the group consisting of 2-chloro-6-methylergoline-8Beta-acetonitrile, a pharmaceutically acceptable salt of 2-chloro-6 -methylergoline-8Beta-acetonitrile, and mixtures thereof to the animal in an amount effective to reduce blood pressure.

4,298,612

INSECT REPELLENTS

Terrence P. McGovern, Bowie, Md., and Carl E. Schreck, Gainesville, Fla., assignors to The United States of America as represented by the Secretary of Agriculture, Washington, D.C.

Division of Ser. No. 8,814, Feb. 2, 1979. This application May 18, 1979, Ser. No. 40,253

The portion of the term of this patent subsequent to Sep. 22, 1998, has been disclaimed.

Int. Cl.³ A01N *43/40*

U.S. Cl. 424—267 **9 Claims**

1. A method of repelling stable flies, black flies, deer flies, sand flies, and mosquitoes comprising applying to the skin or to clothing an effective insect repellent amount of a compound of the formula

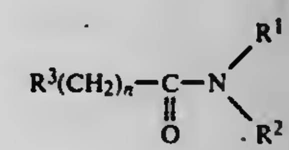

wherein R^3 is one of the groups A, B, or C

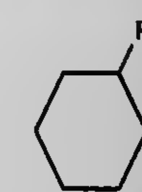

(A)

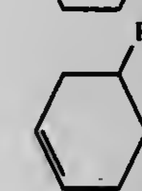

(B)

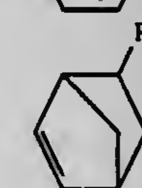

(C)

R is hydrogen or lower alkyl, and n is the positive integer one, two, or three and R^1 and R^2 taken together with the N is selected from the group consisting of

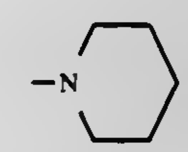

and

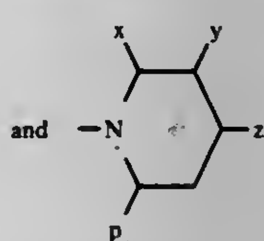

wherein when x is methyl, y and z are hydrogen, and p is either methyl or hydrogen; when y is methyl, x, z, and p are hydrogen; when z is methyl, x, y, and p are hydrogen; and when x is ethyl, y, z, and p are hydrogen.

4,298,613

AGRICULTURAL HETEROCYCLIC SULFENAMIDES

Gerald E. Lepone, Wilmington, Del., assignor to E. I. Du Pont de Nemours and Company, Wilmington, Del.

Filed May 5, 1980, Ser. No. 146,418

Int. Cl.³ A61K *31/40;* C07D *209/48, 207/24*

U.S. Cl. 424—274 **40 Claims**

1. A compound of the formula

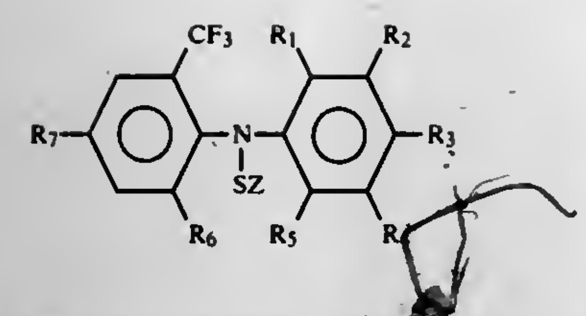

wherein

R_1, R_3, and R_4 are independently H, F, Cl, Br, NO_2, CF_3, OCF_2H, OCF_3, OCF_2CF_2H or $S(O)_kR_8$; or R_3 and R_4 can be taken together to form $-OCF_2O-$ or $-OCF_2OCF_2-$;

R_2 is H, F, Cl, Br, NO_2, CF_3 or $S(O)_kR^8$;

R_8 is C_1-C_2 alkyl or C_1-C_2 alkyl substituted with 2 to 4 atoms of Cl, F or combinations thereof;

k=0, 1 or 2;

R_5 is H, Cl, F, Br or NO_2;

R_6 is H, NO_2, or CF_3;

R_7 is NO_2 or CF_3;

Z is

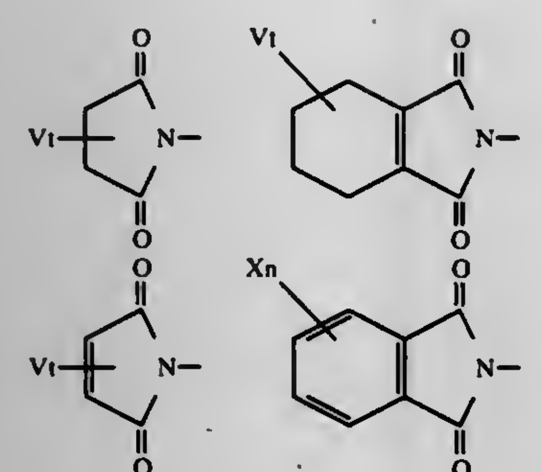

where

bonding to sulfur is to the heterocyclic portion of Z and X can be bonded to any ring position;

X is independently H, F, Cl, Br, NO_2, C_1-C_4 alkyl, C_1-C_4 alkyl substituted with 2 to 4 atoms of Cl, F or combinations thereof, C_1-C_4 alkoxy, C_1-C_4 alkoxy substituted with 2 to 4 atoms of Cl, F or combinations thereof, CN, or $NR_{10}R_{11}$;

V is H, C_1-C_4 alkyl F, Cl, Br;

n is 1, 2, 3 or 4;

t is 1 or 2;

R_{10} and R_{11} are C_1-C_4 alkyl;

provided that

(1) at least two of R_1, R_2, R_3, R_4 and R_5 are hydrogen;

(2) no more than two of the substituents R_1, R_2, R_3 and R_4 are simultaneously NO_2 or CF_3;

(3) when two NO_2 or two $S(O)_kR_8$ groups are present, they are not ortho to one another;

(4) R_6 and R_7 are not simultaneously CF_3;

(5) no more than two of the X substituents are CN, NO_2 or alkoxy;

and further provicded that when R_6 is NO_2, then

(a) R_1 is H, F or Cl when R_3 is other than H, F or Cl;

(b) when $R_1=R_3=R_5$, then R_1, R_3 and R_5 are either H or F; and

(c) R_5 is either H or F.

4,298,614

5'-AMINOALKYL-4',4-DIALKYLPSORALENS

Kurt D. Kaufman, Kalamazoo, Mich., assignor to Thomas C. Elder, Inc., Hamilton, Ind.

Filed Sep. 10, 1979, Ser. No. 73,908

Int. Cl.³ C07D *493/04;* **A61K** *31/365*

U.S. Cl. 424—279 **6 Claims**

1. 5'-primaryaminoloweralkyl-4',4-diloweralkylpsoralen.

3. The method of effecting photochemical sensitivity on the skin of a mammal comprising the step of orally or topically administering to the said mammal an effective photosensitizing dose of a compound of claim 1.

4,298,615

SUBSTITUTED 2,3-DIHYDROBENZOFURYLMETHYL ESTERS, THEIR USE IN PEST CONTROL, AND PEST CONTROL AGENTS CONTAINING THESE COMPOUNDS

Gerd-Ulrich Schwarz, Mannheim; Karl Kiehs, Lampertheim; Walter Boell, Dannstadt-Schaoernheim, and Heinrich Adolphi, Limburgerhof, all of Fed. Rep. of Germany, assignors to BASF Aktiengesellschaft, Fed. Rep. of Germany

Filed Jul. 28, 1980, Ser. No. 172,526

Claims priority, application Fed. Rep. of Germany, Aug. 4, 1979, 2931672

Int. Cl.³ A01N *43/08;* **C07D** *307/82, 307/79*

U.S. Cl. 424—285 **3 Claims**

1. A substituted 2,3-dihydrobenzofurylmethyl ester of the formula

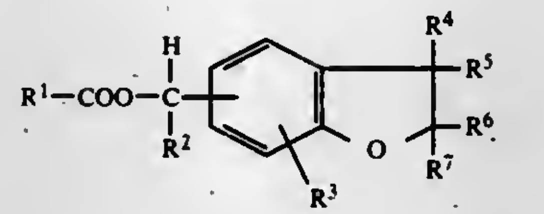

where

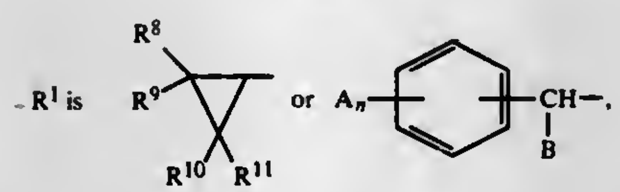

where

R^8 is hydrogen or alkyl of up to 5 carbon atoms, R^9 is alkyl, haloalkenyl or haloalkynyl, each of up to 5 carbon atoms, R^{10} is halogen or alkyl of up to 5 carbon atoms, R^{11} is halogen or alkyl of up to 5 carbon atoms, A is halogen, alkyl, alkoxy, trihaloalkyl or trihaloalkoxy, each of up to 5 carbon atoms, cyano or nitro, B is alkyl, alkenyl or alkynyl, each of up to 4 carbon atoms, or an alicyclic radical of 3 to 7 carbon atoms and n is from 0 to 3,

R^2 is hydrogen, cyano or alkyl, alkenyl or alkynyl, each of up to 5 carbon atoms, and

R^3, R^4, R^5, R^6 and R^7 are identical or different and each is hydrogen, halogen or alkyl, alkenyl, alkynyl or alkoxy, each of up to 5 carbon atoms.

3. A process for combating insects, ticks and mites, wherein an effective amount of at least one substituted 2,3-dihydrobenzofurylmethyl ester is allowed to act on the pests or their habitat, wherein said ester has the formula

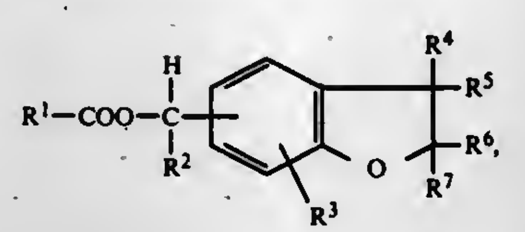

-continued

where

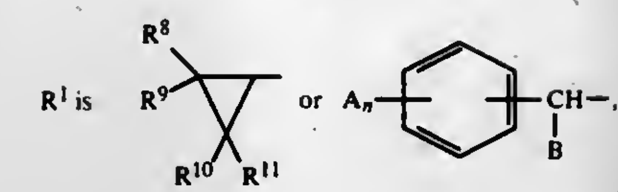

where

R^8 is hydrogen or alkyl of up to 5 carbon atoms, R^9 is alkyl, haloalkenyl or haloalkynyl, each of up to 5 carbon atoms, R^{10} is halogen or alkyl of up to 5 carbon atoms, R^{11} is halogen or alkyl of up to 5 carbon atoms, A is halogen, alkyl, alkoxy, trihaloalkyl or trihaloalkoxy, each of up to 5 carbon atoms, cyano or nitro, B is alkyl, alkenyl or alkynyl, each of up to 4 carbon atoms, or an alicyclic radical of 3 to 7 carbon atoms and n is from 0 to 3,

R^2 is hydrogen, cyano or alkyl, alkenyl or alkynyl, each of up to 5 carbon atoms, and

R^3, R^4, R^5, R^6 and R^7 are identical or different and each is hydrogen, halogen or alkyl, alkenyl, alkynyl or alkoxy, each of up to 5 carbon atoms.

4,298,616

FUNGICIDAL ACYLANILIDE COMPOUNDS

Nazim Punja, Crowthorne, and William G. Rathmell, Wokingham, both of England, assignors to Imperial Chemical Industries Limited, London, England

Filed Oct. 16, 1980, Ser. No. 197,681

Claims priority, application United Kingdom, Nov. 2, 1979, 37968/79

Int. Cl.³ A01N *43/08;* **C07D** *307/68, 307/73*

U.S. Cl. 424—285 **6 Claims**

1. Alkynyl acylanilide derivatives having the formula:

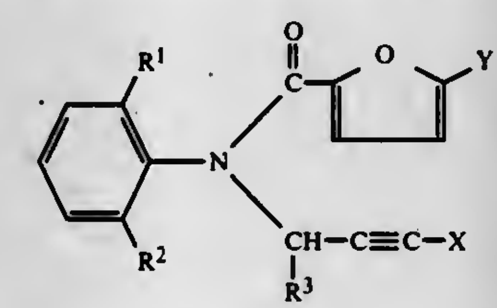

wherein R^1 and R^2 are lower alkyl groups containing from 1 to 4 carbon atoms; R^3 is hydrogen or a lower alkyl group containing from 1 to 4 carbon atoms; X is hydrogen or halogen; and Y is halogen, nitro or an alkoxy group containing from 1 to 4 carbon atoms.

4. A process for combating pests which comprises applying to plants or seeds, or to their loci, a pesticidally effective amount of an acylanilide derivative as defined in any of claims 1 to 3.

4,298,617

SYMMETRICAL AND ASYMMETRICAL SULFINYL-DICARBAMATES

Mohamed A. H. Fahmy, and Tetsuo R. Fukuto, both of Riverside, Calif., assignors to Regents of University of California, Los Angeles, Calif.

Filed Mar. 7, 1979, Ser. No. 18,414

Int. Cl.³ A01N *37/28;* **C07C** *83/10*

U.S. Cl. 424—298 **31 Claims**

1. Carbamates having pesticidal activity of the formula:

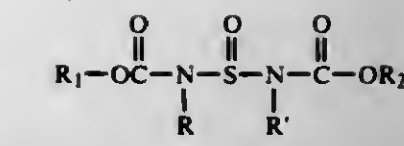

wherein R and R' are each a hydrocarbyl group containing 1 to 12 carbon atoms, and R and R' can be the same or different; R_1 is selected from the class consisting of a hydrocarbyl group containing from 1 to 20 carbon atoms, and a group containing the $>C=N-$ radical; and R_2 can be other than R_1 and selected from the class consisting of a hydrocarbyl group containing from 1 to 20 carbon atoms; or R_2 can be the same as R_1.

6. Symmetrical carbamates as defined in claim 1, wherein R and R' are phenyl or substituted phenyl, and R_1 and R_2 are alkyl groups containing from 1 to 10 carbon atoms, and wherein R_1 and R_2 are the same, and R and R' are the same.

26. An insecticidal composition comprising an insecticidally effective amount of a carbamate as defined in claim 1, in admixture with a carrier.

4,298,618

METHOD OF MAKING CHEESE HAVING ZONES OF DIFFERENT CHARACTERISTICS

Harold J. Peterson, Dodgeville, Wis., assignor to Farmers Pride Cheese, Inc., Arena, Wis.

Filed Apr. 23, 1980, Ser. No. 143,027

Int. Cl.³ A23G *19/02*

U.S. Cl. 426—36 **3 Claims**

1. A method for making cheese having discrete zones exhibiting contrasting characteristics comprising:

(a) filling a cheese vat with milk,

(b) dividing the vat into parts of selected relative size and preventing free fluid interchange between the parts by inserting a partition of solid, substantially fluid-impervious material within the vat in close engagement with the inside surface of the vat,

(c) treating the milk in each of the parts in distinctive manners selected to cause cheese made from the milk of one part to exhibit selected characteristics differing from those exhibited by cheese made from the milk of another part,

(d) treating the milk of each part to form a mass of curd and whey, the curd in each part exhibiting distinctive, selected characteristics,

(e) unifying the interior of the vat after formation of the curd by removing the partition from the vat,

(f) cutting the curd of each part with curd knives to produce pieces of curd of selected sizes, and

(g) stirring the pieces of curd at least until the pieces of curd from all parts of the vat are mixed throughout the vat.

4,298,619

PRODUCTION OF FOODS AND DRINKS CONTAINING BIFIDOBACTERIA

Masahiko Motai, Higashi Yamato; Mitsuo Mada, Kodaira, and Kiyohiro Shimada, Kunitachi, all of Japan, assignors to Kabushiki Kaisha Yakult Honsha, Tokyo, Japan

Filed Feb. 8, 1980, Ser. No. 119,774

Claims priority, application Japan, Feb. 23, 1979, 54-19724

Int. Cl.³ A23C *9/12;* **A23L** *2/02*

U.S. Cl. 426—43 **9 Claims**

1. A method of producing foods and drinks containing bifidobacteria by inoculating and cultivating bifidobacteria or a mixture of bifidobacteria and lactic acid bacteria in a medium consisting essentially of 10 to 20 percent by weight α-starch-transformed rice, which rice has been transformed by cooking, and bifidobacteria-fermentable sugars in an amount of 1-5 percent of the total weight of the medium to produce a bifidobacteria-containing medium having a bifidobacteria cell count of at least 10^7 cells/ml., and preparing a food or drink from said bifidobacteria-containing medium.

4,298,620

TEAR GRASS FERMENTATION PRODUCT, AND PROCESS

Yoshihide Hagiwara, Takarazuka, Japan, assignor to Japan Natural Food Co. Ltd., Osaka, Japan

Filed Jan. 3, 1980, Ser. No. 109,213

Claims priority, application Japan, Jan. 8, 1979, 54-129

Int. Cl.[3] **A23L** *1/28*

U.S. Cl. 426—44 **5 Claims**

1. A fermentation product consisting essentially of the product of fermentation of the water extract of tear grass, or said extract and at least one member selected from the group consisting of animal milks, condensed milk, skim milk, whey, juices of green leaves of barley, a dried product thereof, starch, lactose, sucrose, yeast extract, malt extract, fruit juices and water extracts of cereal germ, with a Lactobacillus strain.

4,298,621

CONVERTING ANIMAL WASTES TO USEFUL PRODUCTS

James M. Samis, Oklahoma City; Walter C. Waechter, Edmond, and Ronald D. James, Oklahoma City, all of Okla., assignors to Thermonetics, Inc., Oklahoma City, Okla.

Filed Jun. 9, 1980, Ser. No. 157,785

Int. Cl.[3] **A23K** *1/00*

U.S. Cl. 426—55 **12 Claims**

1. A process for simultaneously converting swine, poultry and cattle wastes to useful products comprising the steps of:

(a) combining water with said poultry and cattle wastes to form a mixed first slurry thereof;

(b) separating feathers from said first slurry;

(c) combining said swine wastes with said first slurry to form a mixed second slurry containing cattle wastes in the range of about 5% to about 30% by weight of the total fermentable solids;

(d) removing grit from said second slurry;

(e) subjecting said second slurry to anaerobic fermentation for a period of time such that a significant portion of the solid waste materials in said second slurry are converted to a methane-containing gas stream and such that a third slurry is produced containing a partially fermented solid residue;

(f) separating said methane-containing gas stream from said third slurry;

(g) separating partially fermented solid residue from said third slurry forming a solid residue portion and a remaining portion of said third slurry; and

(h) drying said partially fermented solid residue to form a feed product therefrom.

4,298,622

METHOD FOR PRODUCING WHEAT GERM LIPID PRODUCTS

Laxman Singh, Calumet City, Ill., and Wayne K. Rice, Wanatah, Ind., assignors to Vitamins, Inc., Chicago, Ill.

Filed Apr. 3, 1979, Ser. No. 26,749

Int. Cl.[3] **A23L** *1/277, 1/30*

U.S. Cl. 426—254 **15 Claims**

1. A method of producing improved wheat germ oil which comprises:

degumming wheat germ oil by mixing said oil with about 0.2 to 1.0% by weight of H_3PO_4 and sufficient water to hydrate the gums present in said oil, holding said mixture at a temperature between 40° and 80° C. for 30–180 minutes, and centrifuging said treated oil to separate gums;

bleaching said degummed oil by mixing said oil with from about 2 to about 10% by weight of an adsorbant, holding said mixture at a temperature between 90° and 110° C. for between 30 minutes and 120 minutes under substantial vacuum, and separating said adsorbant from the treated oil;

molecularly distilling said bleached oil in a centrifugal molecular still at 140°–200° C. and a pressure below 50 millitorr to remove odor bodies and fatty acids therefrom; and recovering, as still bottoms, an improved wheat germ oil containing less than about 2% by weight free fatty acids and at least 2.5 milligrams per gram of tocopherols.

4,298,623

METHOD OF PRESERVING FRESH CHERRIES

Lyle K. Anderson, P.O. Box 354, Warrenton, Oreg. 97146, and Harold B. Allen, Rt. 2, Box 110, Astoria, Oreg. 97103

Filed Dec. 14, 1979, Ser. No. 103,429

Int. Cl.[3] **A23B** *7/08, 7/10*

U.S. Cl. 426—335 **10 Claims**

1. A method of processing cherries which comprises collecting cherries in a fresh, uncooked condition, and immersing said fresh, uncooked cherries for storage purposes, without pretreatment with sulfur dioxide or derivatives thereof, in an aqueous storage solution made up of an edible acid and dissolved sugar, the acid in said solution having sufficient concentration to inhibit bacterial growth and the sugar solute in the solution inhibiting osmotically produced change in cherry appearance.

4,298,624

PROTECTION AGAINST MITE CONTAMINATION

Jeffrey S. Mehring, Battle Creek; Ronald J. Sayen, Portage; Robert E. Schara, Battle Creek; Charles T. Stocker, Augusta, all of Mich., and Juan G. Rodriguez, Lexington, Ky., assignors to General Foods Corp., White Plains, N.Y.

Continuation of Ser. No. 680,305, Apr. 26, 1976, abandoned, which is a continuation of Ser. No. 338,020, Mar. 5, 1973, abandoned, which is a continuation of Ser. No. 81,617, Oct. 16, 1970, abandoned. This application Jul. 20, 1977, Ser. No. 817,382

Int. Cl.[3] **A23K** *3/00;* **A23L** *3/34*

U.S. Cl. 426—532 **8 Claims**

1. A food composition having a moisture content of about 15 to 50% by weight comprised of a comestible material normally capable of supporting bacteriological growth, water soluble solutes in an amount to provide bacteriostasis to said food composition, and a material affording protection against the infestation and reproduction of mites of an effective amount of from 1.0 to 3.0% by weight fatty acid component selected from the group consisting of straight chain fatty acids containing carbon atoms from C_4 to C_{10}, fatty acid amides derived from fatty acids containing carbon atoms from C_3 to C_{10}, fatty acid salts derived from fatty acids containing carbon atoms from C_3 to C_{10}, propionic acid and mixtures thereof, said propionic acid being employed only in conjunction with said fatty acid, amide, ester or salt.

4,298,625

SWEET PROTEIN FOOD PRODUCT IN THE FORM OF A FOAMED PLASTIC MASS

Renzo Cillario, Alba, Italy, assignor to P. Ferrero & C. S.p.A., Alba, Italy

Filed May 6, 1980, Ser. No. 147,017

Claims priority, application Italy, Sep. 11, 1979, 68798 A/79

Int. Cl.[3] **A23G** *3/00*

U.S. Cl. 426—572 **10 Claims**

1. Sweet protein food product, in the form of a foamed plastic mass consisting essentially of an "oil in water" emulsion formed from edible fat, milk proteins, sugar and water, having a pH of from 6.2 to 7.5 and obtainable by a process comprising the steps of:

(a) preparing an "oil in water" emulsion at 55°–65° C. with 75–55% by weight of an aqueous phase comprising at least 70% by weight of partially-skimmed, sweetened condensed milk and 25–45% by weight of an oil phase comprising at least 98% by weight of at least one crystallizable edible fat, and in which:

the said condensed milk has a viscosity of from 2000 to 6000 cps at 20° C. and a variation in viscosity at 40° C. not exceeding 1500 cps after heating to 80° C. and subsequent cooling to 40° C.;

the protein content of the emulsion consists entirely of milk proteins including casein and serum protein;

the emulsion contains water in amounts from 17% to 35% by weight and the protein/water weight ratio is from about 12:100 to about 36:100;

(b) pasteurizing the said emulsion at a temperature of 90°–110° C. for a time not exceeding about 18 seconds while avoiding evaporation of the water content of the emulsion;

(c) rapidly cooling the pasteurized emulsion to 45°–55° C. and intimately seeding the pasteurized emulsion with lactose microcrystals added in a quantity at least 0.015% but not exceeding 1% by weight and foaming the seeded emulsion by means of the intimate incorporation of an inert gas;

(d) cooling the emulsion to a temperature not greater than 20° C. under mechanical beating for a sufficient length of time to produce crystallization of at least part of the edible fat content of the emulsion;

(e) packaging or storing the cooled emulsion under sterile conditions.

4,298,626

PRODUCTION OF AN ISO-α-ACID PREPARATION FROM HOPS

Derek R. J. Laws, Bexley Heath; Nigel A. Bath, Kemsing; Colin S. Ennis, Chislehurst; John A. Pickett, Kimpton, and Alfred G. Wheldon, Galley Wood, all of England, assignors to Brewing Patents Limited, London, England

Continuation-in-part of Ser. No. 793,357, May 3, 1977, Pat. No. 4,212,895. This application Sep. 19, 1979, Ser. No. 76,949

Claims priority, application United Kingdom, Oct. 13, 1976, 42613/76

The portion of the term of this patent subsequent to Aug. 10, 1996, has been disclaimed.

Int. Cl.[3] **C12C** *3/00*

U.S. Cl. 426—600 **2 Claims**

1. A method of making an iso-α-acid preparation, suitable for addition to beer without haze formation which method consists essentially of:

(i) extracting hops with liquid carbon dioxide at a temperature from −5° C. to 20° C., under a pressure sufficient to keep the carbon dioxide liquid but not so high that the carbon dioxide behaves like a supercritical fluid, thereby extracting at least a portion of the α-acid contained in the hops into the carbon dioxide;

(ii) evaporating off the liquid carbon dioxide under conditions such that the extract comes in contact only with equipment which is chemically inert to the extract, thereby recovering a primary hop extract of high purity consisting essentially of α-acids, β-acids, hop oil, and the following impurities: uncharacterized soft resins up to 3%; hard resins up to 0.5%; tannins up to 0.5%; chlorophyll up to 0.2%; fats and waxes up to 0.2%; fines up to 0.5% and inorganic salts up to 0.5%, the total impurities being up to 4% and said extracts being yellow;

(iii) preparing an alkaline aqueous solution containing the extract; and

(iv) boiling this solution to convert substantially all the α-acids present therein to iso-α-acids.

4,298,627

POTATO TREATS

Hettie L. Rains, Rte. 2, Box 1022, Williamsburg, Ky. 40769

Continuation-in-part of Ser. No. 548,894, Feb. 11, 1975, abandoned. This application Jan. 11, 1977, Ser. No. 758,500

Int. Cl.[3] **A23L** *1/216*

U.S. Cl. 426—637 **3 Claims**

1. A potato-based snack food having a crisp texture, tan color, natural potato taste, containing substantially all of the natural minerals and essentially devoid of the natural carbohydrates of potatoes, which consists essentially of fresh white potato peelings removed from potatoes, deep-fat fried in an edible oil at a temperature of about 325°–350° F. for a time sufficient to produce said crisp texture and tan color to said snack food.

4,298,628

METHOD FOR MANUFACTURING FRIED TOFU PRODUCTS

Toshiyuki Nagata; Masahiko Terashima, and Kazuto Mashima, all of Osaka, Japan, assignors to Fuji Oil Company, Ltd., Osaka, Japan

Filed Aug. 14, 1979, Ser. No. 66,821

Claims priority, application Japan, Aug. 24, 1978, 53-103565

Int. Cl.[3] **A23J** *3/00*

U.S. Cl. 426—656 **12 Claims**

1. A method for manufacturing a fried tofu product comprising:

kneading a mixture of a soy-proteinaceous material containing a crude protein in an amount of 60% or more by weight relative to the weight of the dry solids thereof with water;

adding a salt or hydroxide of calcium or magnesium in an amount of 1% or more by weight relative to the weight of the crude protein, in such a manner as to avoid any possible water-release from the mixture;

shaping the mixture containing the calcium or magnesium compound into any desired shape; and

deep-frying the shaped mixture.

4,298,629

METHOD FOR FORMING A NITRIDE INSULATING FILM ON A SILICON SEMICONDUCTOR SUBSTRATE SURFACE BY DIRECT NITRIDATION

Takao Nozaki, Yokohama; Takashi Ito, Kawasaki; Hideki Arakawa; Hajime Ishikawa, both of Yokohama, and Masaichi Shinoda, Sagamihara, all of Japan, assignors to Fujitsu Limited, Kawasaki, Japan

Filed Mar. 7, 1980, Ser. No. 128,172

Claims priority, application Japan, Mar. 9, 1979, 54-27301

Int. Cl.[3] **C23C** *11/00*

U.S. Cl. 427—39 **30 Claims**

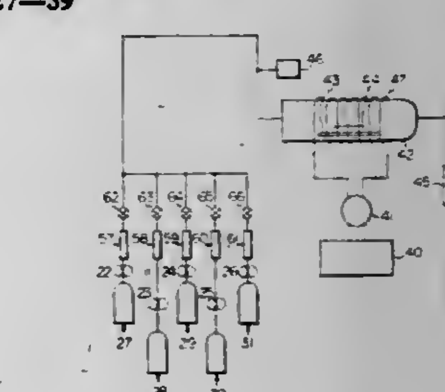

1. A method for forming an insulating film on the surface of at least one semiconductor silicon body, wherein the insulating film is formed of silicon nitride by direct nitridation in a direct nitridation reaction chamber, comprising

positioning each semiconductor body in the direct nitridation reaction chamber,

generating a gas plasma of a nitrogen containing gas in the direct nitridation reaction chamber, and

heating the semiconductor silicon body to a temperature of from approximately 800° to approximately 1300° C. within the gas plasma.

4,298,630

METHOD OF MANUFACTURING ELECTRICALLY INSULATED CONDUCTORS WITH ULTRA-VIOLET CURED COATINGS

Marek Kapuscinski, Montreal, and Michel Gervais, Verdun, both of Canada, assignors to Northern Telecom Ltd., Montreal, Canada

Continuation-in-part of Ser. No. 889,231, Mar. 23, 1978, abandoned. This application Sep. 17, 1979, Ser. No. 76,320

Int. Cl.³ B05D *3/06*

U.S. Cl. 427—44 **4 Claims**

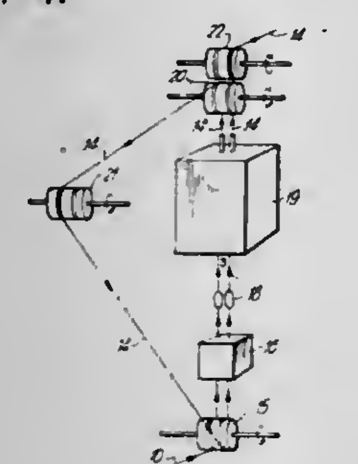

4. A method for producing an electrically insulated conductor for a telecommunications cable comprising:

covering a conducting member with a layer of an uncured photopolymer by passing it through a bath of the photopolymer to provide a first coating, partially curing the first coating by ultra-violet light and then covering the first coating with a second coating;

partially curing the second coating of the layer of photopolymer with ultra-violet light;

applying a layer of pulp insulation directly over the partially cured photopolymer layer and further curing the photopolymer layer to cause a chemical bond to take place between the two layers at an interfacial region.

4,298,631

METHOD FOR SMOOTHING BOTH MAGNETIC COAT LAYERS OF MAGNETIC RECORDING MEDIUM

Chiho Mikura, and Fujio Shibata, both of Tokyo, Japan, assignors to TDK Electronics Co., Ltd., Tokyo, Japan

Continuation-in-part of Ser. No. 20,063, Mar. 13, 1979, abandoned. This application Jun. 4, 1980, Ser. No. 156,405

Claims priority, application Japan, Apr. 10, 1978, 53-41855

Int. Cl.³ B05D *5/12*

U.S. Cl. 427—130 **3 Claims**

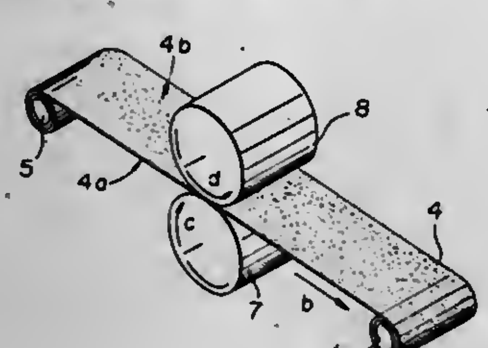

1. A method for simultaneously smoothing both magnetic coating layers of a recording medium having solid magnetic coatings disposed on both sides thereof, said method comprising:

winding on a feed roll, a recording medium including solid magnetic coatings disposed on both sides thereof;

disposing at least one pair of rigid rotary rolls positioned between said feed roll and a take-up roll, the rolls of each of said at least one pair having identical moduli of elasticity, said rolls of each of said at least one pair of rolls being contacted with a predetermined pressure;

unwinding said recording medium from said feed roll;

receiving said recording medium between said contacting rolls for smoothing said solid magnetic coatings; and

taking up said recording medium on said take-up roll, whereby calendar damage of said solid magnetic coatings is prevented.

4,298,632

SILICONE COATED ABRASION RESISTANT POLYCARBONATE ARTICLE

Siegfried H. Schroeter, Schenectady, and Daniel R. Olson, Clifton Park, both of N.Y., assignors to General Electric Company, Pittsfield, Mass.

Division of Ser. No. 956,809, Nov. 1, 1978, Pat. No. 4,243,720. This application Aug. 17, 1979, Ser. No. 67,470

Int. Cl.³ B05D *1/38, 5/00*

U.S. Cl. 427—160 **6 Claims**

1. A process for providing a polycarbonate substrate with an abrasion and chemical solvent resistant thermoset organopolysiloxane coating consisting essentially of: (i) priming at least one surface of said substrate by applying onto said surface a primer composition consisting essentially of a thermoplastic acrylic polymer containing functional groups, said functional groups being selected from the group consisting of hydroxyl, carboxyl, amine, epoxide, amide, —SH, —SO_3H, —COOR, —$Si(OR^1)_3$, and mixtures thereof wherein R and R^1 are alkyl radicals containing from 1 to about 20 carbon atoms, and a solvent for said acrylic polymer; (ii) evaporating off the solvent from said primer composition thereby forming a solid primer layer consisting essentially of a thermoplastic acrylic polymer containing functional groups; (iii) applying onto the primer layer a top coat composition consisting of a solvent-soluble further-curable organopolysiloxane and a solvent therefor; (iv) evaporating off a substantial amount of the solvent in the top-coat composition; and (v) curing said further-curable organopolysiloxane thereby forming a hard, abrasion and chemical solvent resistant top-coat consisting of a thermoset organopolysiloxane which is tenaciously and durably adhered to the polycarbonate substrate.

4,298,633

METHOD AND APPARATUS FOR TENSIONING METALLIC STRIPS ON A SLITTING LINE

Charles R. Bradlee, Sidney, Ohio, assignor to The Monarch Machine Tool Company, Sidney, Ohio

Filed Jun. 19, 1980, Ser. No. 161,186

Int. Cl.³ B05C *9/10;* **B65H** *23/04*

U.S. Cl. 427—172 **16 Claims**

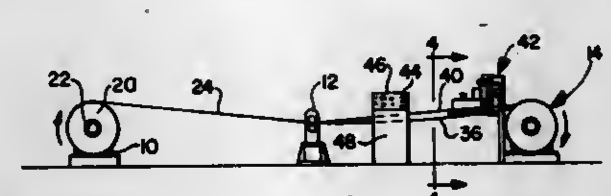

1. In combination with a metal slitting operation including the steps of uncoiling a web having a non-uniform cross sectional thickness from a metal coil, slitting said web into a plurality of strips having varying thicknesses and recoiling said strips into individual strip coils, the method of tensioning strips comprising the step of:

depositing a flowable material onto thinner strips after said slitting step and hardening said material during said recoiling step such that said material is overlapped by successive windings of said thinner strips, the amount of flowable material deposited being such as to increase the effective cross sectional thickness of said thinner strips so that all strip coils are of comparable diameter, thereby eliminating slackness in said strips.

7. An improved slitting line of the type having an uncoiler for uncoiling a metal web from a roll of coiled sheet metal having a non-uniform cross sectional thickness, a slitter for slitting said web into a plurality of strips having varying thicknesses, and a recoiler for recoiling said strips into individual strip coils, the improvement comprising:

means for depositing a flowable compound onto thinner strips so that the effective cross sectional thickness of said thinner strips is increased so that all strip coils are of comparable diameter, thereby eliminating slackness in said thinner strips between said slitter and said recoiler.

4,298,634

METHOD FOR COATING CYLINDRICAL SURFACES

Edwin H. Phelps, Birmingham, Ala., assignor to Compagnie Internationale Pour l'Informatique CII-Honeywell Bull (Societe Anonyme), Paris, France

Filed Nov. 4, 1980, Ser. No. 204,049

Int. Cl.³ B05D *1/12, 7/22*

U.S. Cl. 427—183 **19 Claims**

1. A method of coating the interior of a hollow cylindrical surface with a hydraulic cement comprising:

(a) depositing on the internal surface of said cylinder a composition comprising a substantially dry hydraulic cement, said cylinder being rotated about its longitudinal axis at a rate such that the centrifugal force generated thereby holds the cement composition substantially stationary at the point of deposition with respect to the said internal surface;

(b) applying to the said dry cement coated internal surface an aqueous composition containing an amount of water sufficient to substantially wet and harden said hydraulic cement; and

(c) continuing to rotate said cylinder until the said hydraulic cement coating has substantially hardened.

4,298,635

CORROSION PROTECTION METHOD

Roger Lovell, P.O. Box 981, Palacios, Tex. 77465

Division of Ser. No. 587, Jan. 2, 1979, Pat. No. 4,275,111, which is a continuation-in-part of Ser. No. 783,467, Mar. 31, 1977, abandoned. This application Oct. 30, 1979, Ser. No. 89,317

Int. Cl.³ B05D *3/12, 7/14*

U.S. Cl. 427—247 **40 Claims**

1. A method of providing corrosion protection to a metal body having outer surface means and pore means communicating with said outer surface means, which comprises the steps of:

impregnating said pore means with inner protective material that is applied in liquid state, said inner material being substantially impervious to atmospheric corrosive agents,

removing from said outer surface means substantially all of said inner material that may remain thereon after said impregnating step while retaining impregnant inner material in said pore means, and

while said outer surface means remains substantially free of said inner material, applying an outer protective material to said metal body to form a covering of a solid outer protective material over said outer surface means and said pore means, said outer material being different from said inner material and being substantially impervious to atmospheric corrosive agents and to said inner material, said outer protective material being applied so as to form an intimate bond with said outer surface means and bridge over said pore means.

4,298,636

PROCESS FOR ACTIVATING PLASTIC SURFACES FOR METALLIZATION THEREOF BY TREATMENT WITH A COMPLEX FORMING SOLUTION

Herbert Künzig, Aschaffenburg, Fed. Rep. of Germany, assignor to Licentia Patent-Verwaltungs-G.m.b.H., Frankfurt am Main, Fed. Rep. of Germany

Continuation-in-part of Ser. No. 84,138, Oct. 12, 1979. This application Apr. 7, 1980, Ser. No. 137,826

Claims priority, application Fed. Rep. of Germany, Oct. 12, 1978, 2844425; Jul. 28, 1979, 2930784

Int. Cl.³ C23C *3/02*

U.S. Cl. 427—304 **33 Claims**

1. A process for activating a plastic surface with noble metal nuclei for subsequent metallization, which comprises:

(a) roughening the plastic surface to be metallized, by mechanical, nonoxidative means;

(b) treating the mechanically, nonoxidatively roughened plastic surface with a complex-former solution to deposit a complex on the plastic surface;

(c) treating the resulting plastic surface with a solution of a noble metal complex salt so that the complex deposited by the complex-former solution is exchanged for a noble metal complex on the plastic surface; and

(d) converting the noble metal complex to metal nuclei.

4,298,637

METHOD OF APPLYING A BINDER HAVING LESS THAN 0.5% WATER SOLUBLE COMPOUNDS TO TUFTED FLOOR COVERINGS

Jean-Claude Daniel, Fontenay-sous-Bois; Jacques Grossoleil, Paris, and Robert Roullet, Lyons, all of France, assignors to Rhone-Poulenc Industries, Paris, France

Division of Ser. No. 898,955, Apr. 21, 1978, Pat. No. 4,246,309. This application Aug. 15, 1980, Ser. No. 178,467

Claims priority, application France, Apr. 22, 1977, 77 12160

Int. Cl.³ B32B *27/06*

U.S. Cl. 427—372.2 **1 Claim**

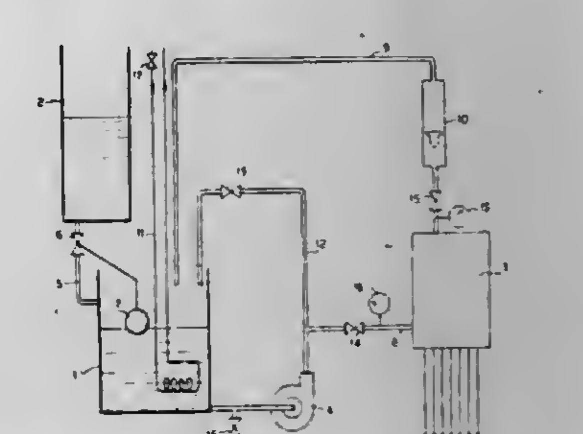

1. Process for the manufacture of tufted floor covering comprising impregnating a tufted sheet with an aqueous latex binder of a synthetic polymer in which the content in the latex of water soluble compounds dissolved in the aqueous phase is less than 0.5% by weight in relation to the polymer, sizing the impregnated sheet by compression, and then drying the impregnated sheet.

4,298,638
COATING COMPOSITION OF A POLYAMIDE AND 2-NITRO-2-HYDROXYMETHYL-1,3-PROPANEDIOL
Jerry H. Hunsucker, Terre Haute, Ind., assignor to International Minerals & Chemical Corp., Terre Haute, Ind.
Continuation-in-part of Ser. No. 25,642, Mar. 30, 1979, abandoned. This application Jul. 28, 1980, Ser. No. 172,627
Int. Cl.³ C08L *91/00*
U.S. Cl. 427—385.5 **11 Claims**

1. A resinous composition comprising a polyamide prepared from a dimerized fatty acid and a polyamide and modified by 2-nitro-2-hydroxymethyl-1,3-propanediol.

4,298,639
WET STRENGTH POLYMERS
Donald N. Van Eenam, Des Peres, Mo., assignor to Monsanto Company, St. Louis, Mo.
Division of Ser. No. 21,414, Mar. 19, 1979, Pat. No. 4,233,417. This application Apr. 7, 1980, Ser. No. 137,888
The portion of the term of this patent subsequent to Oct. 7, 1997, has been disclaimed.
Int. Cl.³ B05D *3/02, 3/04*
U.S. Cl. 427—386 **9 Claims**

1. A process for improving the wet strength of a cellulosic substrate which comprises:

I. providing a composition comprising water-soluble, cationic, thermosetting polymer comprising a backbone formed of repeating segments, at least 10% of which comprise an amine group, wherein
 A. substantially all the amine groups are pendant from the backbone segment and have a structure selected from the group consisting of

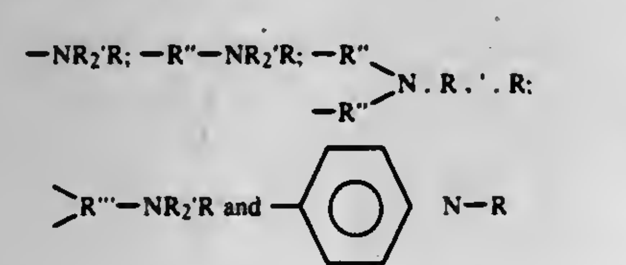

 wherein R¹ is selected from the group consisting of methyl and, where the nitrogen bears two R¹ groups these, together with the nitrogen can form a heterocyclic radical; R'' is a divalent radical; R''' is a trivalent radical; and R is selected from

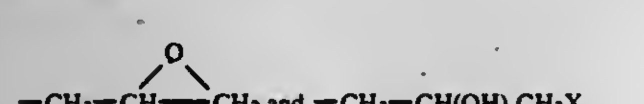

 wherein X is a potential anion; the unattached bond in each amine structure being attached directly to a carbon atom of the polymer backbone; and
 B. a 10% solids solution of the said polymer in water at 20° C. and a pH of 11 does not gel for at least 10 hours;

II. activating the composition by raising its pH to about 10 to 13;

III. applying an effective amount of the activated composition to the substrate; and

IV. curing the composition by the application of heat.

4,298,640
MOLDINGS FOR AUTOMOBILES
Hisanori Katoh, Tokyo, Japan, assignor to Inoue Gomu Kogyo Kabushiki Kaisha, Aichi, Japan
Continuation-in-part of Ser. No. 944,307, Sep. 21, 1978, abandoned. This application Jan. 2, 1980, Ser. No. 109,067
Claims priority, application Japan, Mar. 31, 1978, 53-42502[U]
Int. Cl.³ B32B *7/02, 7/04;* **B60R** *13/04;* **B61F** *19/04*
U.S. Cl. 428—31 **9 Claims**

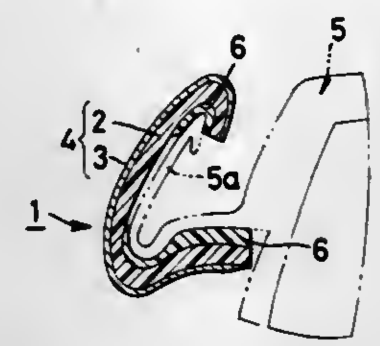

1. A molding for automobiles, comprising a body consisting of a heat-resistant hardened synthetic resin base selected from the group consisting of ABS resin, acryl resin and polycarbonate resin having a hardness of 85–95 on the Rockwell R Scale, a stainless foil layer fixed to a first surface of said base, and an elastic layer, of a soft synthetic resin having a hardness of 50–95 on the Shore A Scale, formed on a second surface of said base at the contact area of said body with a car body, said second surface being on the opposite side of said base from said first surface wherein said soft synthetic resin is selected from the group consisting of soft vinyl chloride resin, vinyl acetate resin and ethylene-vinyl acetate copolymer resin.

4,298,641
HEAT RECOVERABLE ARTICLE
Bodo Boettcher, Ottobrunn, Fed. Rep. of Germany, assignor to N.V. Raychem S.A., Kessel-lo, Belgium
Division of Ser. No. 680,478, Apr. 26, 1976, Pat. No. 4,118,260. This application Jul. 28, 1978, Ser. No. 929,170
Claims priority, application United Kingdom, Apr. 4, 1975, 17362/75
Int. Cl.³ F16L *11/00*
U.S. Cl. 428—36 **4 Claims**

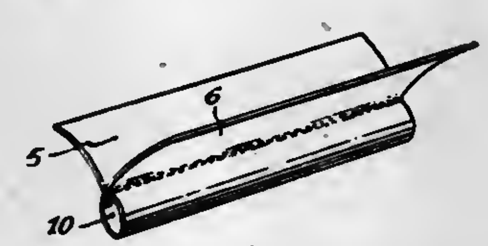

1. A heat recoverable article which comprises a heat recoverable sleeve that has been provided with at least two conduits, being respectively an auxiliary conduit being formed by bonding together at least two strips of bonding material on at least a portion of the surface of said sheet which in use forms the interior of said heat recoverable sleeve, and a main conduit formed by a holding means fastening together opposed edges of said sheet, said conduits being capable of receiving a substrate.

4,298,642
SELF-ADHESIVE CROSSOVER FOIL OF METAL AND POLYESTER
John W. Walter, 511 Manhasset Woods Rd., Manhasset, N.Y. 11030
Continuation of Ser. No. 872,192, Jan. 25, 1978, abandoned. This application May 3, 1979, Ser. No. 35,579
Int. Cl.³ B32B *15/08*
U.S. Cl. 428—40 **8 Claims**

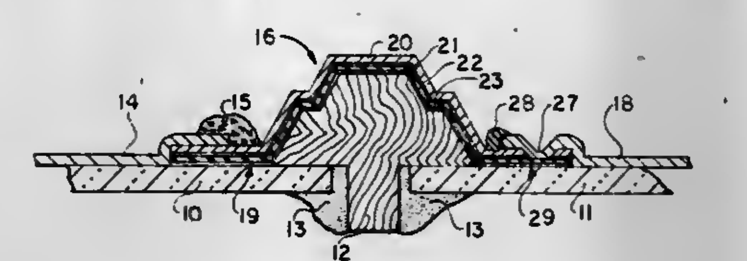

1. In a security alarm system of the type which includes means for electrically interconnecting the ends of foils together on adjacent panes across a crossbar, the improvement comprising said means for electrically interconnecting comprising a self-adhesive crossover foil for attachment to the ends of said foils consisting of:

an electrically-conductive strip of metal selected from the group consisting of lead, copper, tin and aluminum having first and second surfaces on opposite sides thereof, the first surface of which is exposed to air;

an electrically-insulating strip of a material selected from the group consisting of polyethylene terephthalate, polyethylene, acetate and vinyl having first and second surfaces on opposite sides thereof, said first surface of which is joined to said second surface of said electrically-conductive strip, and said electrically-insulating strip being at least as wide as said electrically-conductive strip; and

a pressure-sensitive adhesive disposed on said second surface of said electrically-insulating strip.

4,298,643
FIBER SHEET FOR FORMING
Yoshiaki Miyagawa, and Takeshi Mitomi, both of Otsu, Japan, assignors to Toyo Boseki Kabushiki Kaisha, Japan
Filed Apr. 12, 1979, Ser. No. 29,173
Claims priority, application Japan, Apr. 14, 1978, 53/44384; Jun. 30, 1978, 53/80235; Aug. 22, 1978, 53/102621
Int. Cl.³ D03D *27/00*
U.S. Cl. 428—85 **11 Claims**

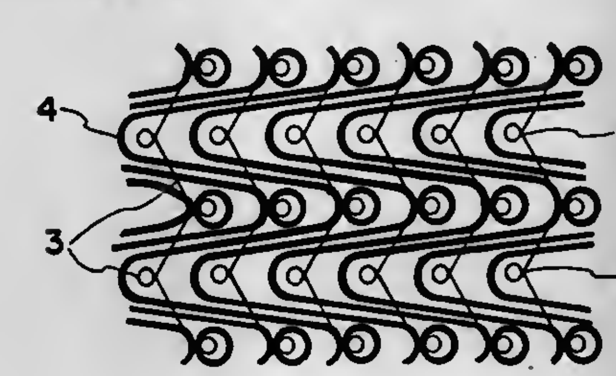

1. A yarn interlaced fabric sheet, adapted for lamination to a plastic sheet to provide a laminate having a fabric surface having excellent appearance and hand, which fabric sheet comprises (A) a first side, adapted for lamination to a plastic sheet, comprised mainly of a stretchable, low softening point fiber having a softening point between 80° and 220° C. and an elongation at break of at least 50% and (B) a second appearance contributing side comprised mainly of a fiber having a softening point at least 20° C. higher than the softening point of the low softening point fiber.

11. A process which comprises heat forming an article from a laminate comprising:

(A) A yarn interlaced fabric sheet comprising:
 (i) a first side comprised mainly of a stretchable, low softening point fiber having a softening point between 80° and 220° C. and an elongation at break if at least 50%, and
 (ii) a second appearance contributing side comprised mainly of a fiber having a softening point at least 20° C. higher than the softening point of the low softening point fiber; and

(B) a formable plastic sheet, said fiber sheet (A) being bonded at said first side to said formable plastic sheet (B), said heat forming being conducted so that the stretchable, low softening point fiber stretches at the surface of the fabric sheet bonded to said plastic sheet along curved surfaces formed in the bonded surface of the plastic sheet during the heat forming process, while the fiber having an at least 20° C. higher melting point remains thermally stable at the appearance contributing side of the bonded fabric layer.

4,298,644
EXTREMELY FINE ACRYLIC POLYMER FIBER PILE FABRIC AND PROCESS FOR PRODUCING THE SAME
Kunitoshi Shimizu; Masakazu Takamura, both of Fuji, and Toshio Iwasa, Kawasaki, all of Japan, assignors to Asahi Kasei Kogyo Kabushiki Kaisha, Osaka, Japan
Continuation-in-part of Ser. No. 925,247, Jul. 17, 1978, abandoned. This application Mar. 6, 1980, Ser. No. 127,606
Claims priority, application Japan, Jul. 25, 1977, 52-88330; Aug. 23, 1977, 52-100133; Aug. 23, 1977, 52-100134; Aug. 23, 1977, 52-100135
Int. Cl.³ B32B *33/00;* **D06C** *11/00*
U.S. Cl. 428—91 **37 Claims**

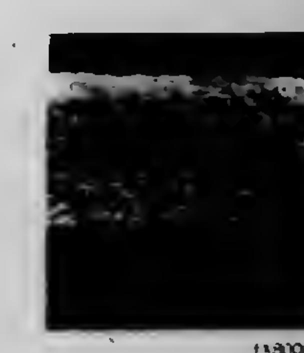

1. An extremely fine acrylic polymer fiber pile fabric comprising a substratum fabric impregnated with an elastic polymer and having at least one pile layer formed by raising at least one surface of said fabric, characterized in that said piles consist essentially of extremely fine independent acrylic polymer fibers, each of which has a denier of 0.8 or less and is provided with a number of amorphous scale-shaped protuberances formed on the peripheral surface thereof, and which has been produced by a wet spinning method from an acrylic polymer containing at least 80% by weight of acrylonitrile.

4,298,645
TARPAULINS HAVING GREAT TEARING STRENGTH
Tsutomu Obayashi, Kanamachi, and Hideyuki Hiraoka, Musashino, both of Japan, assignors to Hiraoka & Co., Ltd., Tokyo, Japan
Continuation of Ser. No. 21,921, Mar. 19, 1979, abandoned. This application Jul. 14, 1980, Ser. No. 168,057
Claims priority, application Japan, Apr. 18, 1978, 53-41384; Apr. 20, 1978, 53-45960; Nov. 16, 1978, 53-141454
Int. Cl.³ B32B *5/12*
U.S. Cl. 428—110 **7 Claims**

1. A tarpaulin having a great tear strength, comprising (A) a base fabric composed of (a) a warp layer consisting of a number of warp threads arranged parallel to each other; (b) a weft

layer which consists of a number of weft threads arranged parallel to each other, said weft layer being superimposed on said warp layer in such a manner that the longitudinal direction of said weft threads crosses the longitudinal direction of said warp threads, and; (c) a number of auxiliary threads which are entangled around said warp threads and said weft threads and which combine said warp threads with said weft threads at the

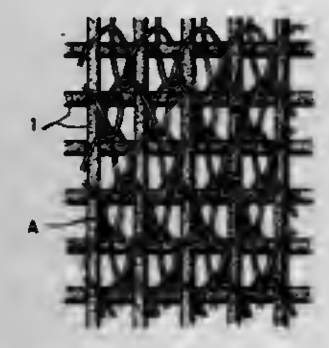

crossing points thereof, and; (B) at least one waterproofing layer formed on at least one surface of said base fabric, the breaking strength, the breaking elongation and/or the breaking work of said auxiliary threads being higher than that of said warp and weft threads, and/or the adhesive strength of said auxiliary threads to said waterproofing layer being lower than that of said warp and weft threads.

4,298,646
DIFFERENTIAL GLOSS PRODUCTS AND METHODS OF MAKING THE SAME
Laurence F. Haemer, Newtown, Pa., and Theodore Kimak, Clifton, N.J., assignors to Congoleum Corporation, Kearny, N.J.
Filed Jun. 30, 1980, Ser. No. 164,456
Int. Cl.³ B32B *3/30;* **B05D** *3/02*
U.S. Cl. 428—159 **16 Claims**

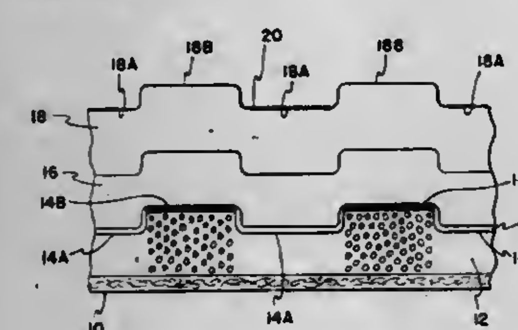

1. A differential gloss resinous sheet material comprising:
a base resinous material, portions of which are blown or foamed and portions of which are unblown or unfoamed;
a printing ink composition on said base resinous material in the form of a predetermined pattern or design, some printed portions of which contain a urethane polymerization catalyst and some printed portions of which contain a blowing or foaming inhibitor, said urethane polymerization catalyst-containing portions and said blowing or foaming inhibitor-containing portions occupying the same or different portions;
a resinous wear layer applied to said printing ink composition and having relatively higher areas and relatively lower areas;
a substantially monomer-free polyurethane top coating, substantially all parts of which are substantially completely polymerized, applied to said resinous wear layer and having relatively higher surfaces and relatively lower surfaces, some of said surfaces having a smooth, shiny, high gloss appearance and some of said surfaces having a dead, dull, low gloss appearance; and
a particulate, powdered or granulated material adheringly embedded in said surfaces having a dead, dull, low gloss appearance.

4,298,647
CROSS-TEARABLE DECORATIVE SHEET MATERIAL
Leopoldo V. Cancio, and Pai-Chuan Wu, both of Cincinnati, Ohio, assignors to Clopay Corporation, Cincinnati, Ohio
Filed Jul. 16, 1979, Ser. No. 57,792
Int. Cl.³ B32B *3/30, 27/20*
U.S. Cl. 428—167 **17 Claims**

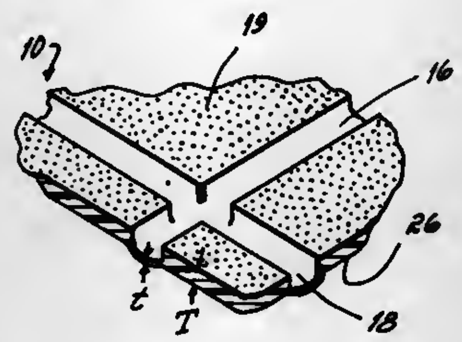

1. A surface covering comprising a length of embossed polymeric film having a first series of spaced, substantially parallel continuous imperforate hand-tear lines of reduced film thickness extending in a first direction and a second series of spaced, substantially parallel continuous imperforate hand-tear lines of reduced film thickness extending in a second direction and intersecting said first series of hand-tear lines, said film being formed of a polymeric matrix containing a dispersed second phase in an amount effective to initiate and propagate tear along said hand-tear lines such that said surface covering may be sized in two directions by hand with generally the same degree of tearing force wihtout use of cutting tools to provide smooth, straight edges after sizing.

4,298,648
BELTING FABRIC
John Turnbull, Charlotte, N.C., assignor to Celanese Corporation, New York, N.Y.
Filed Feb. 28, 1979, Ser. No. 15,974
Int. Cl.³ B32B *3/00*
U.S. Cl. 428—195 **32 Claims**

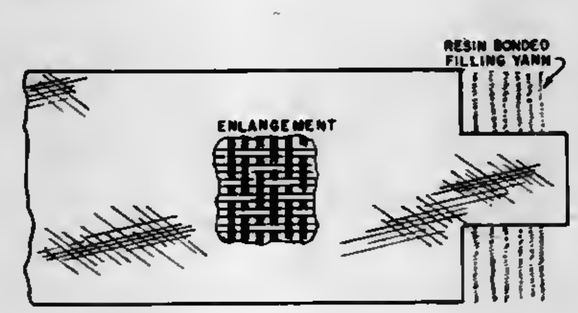

1. A woven seat belting fabric approximately two inches broad which comprises resin bonded polyester multifilament filling yarns, and polyester multifilament warp yarns; said fabric having a lateral stiffness, as measured by the lateral belt stiffness test of at least 0.650 with a 20 gram load, and at least 0.300 with a 50 gram load; said fabric deflecting from the horizontal at least 0.875 inches with a central load of 110 grams when tested by the warp stiffness test; said fabric having a breaking load greater than 6,300 pounds for a fabric having a weight of less than 12 pounds per 100 yards.

4,298,649
NONWOVEN DISPOSABLE WIPER
Gary H. Meltner, Winneconne, Wis., assignor to Kimberly-Clark Corporation, Neenah, Wis.
Filed Jan. 7, 1980, Ser. No. 110,095
Int. Cl.³ B32B *5/12*
U.S. Cl. 428—198 **8 Claims**

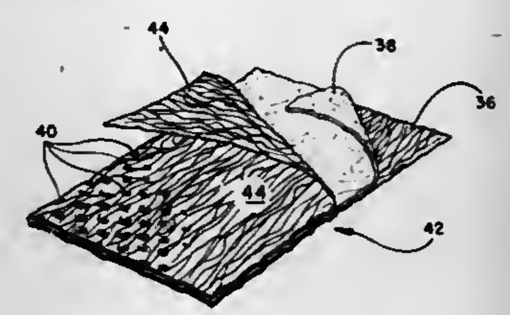

1. A nonwoven composite wiper consisting essentially of,
(a) a web having a basis weight in the range of from about 1.0 oz/yd^2 to 4.0 oz/yd^2 of meltblown, thermoplastic polypropylene microfibers having an average diameter in the range of up to about ten microns and
(b) on at least one side of said microfiber web a split thermoplastic foamed polypropylene filamentary web having a basis weight in the range of from about 0.1 oz/yd^2 to 0.6 oz/yd^2 comprising filaments having an average diameter at least about twice that of said microfibers up to a maximum of about 40 microns,
said composite being pattern bonded and containing 0.1 to 1.0% by weight of a surfactant selected from the group consisting of ionic and nonionic surfactants.

4,298,650
PHOSPHORESCENT SCREENS
Chen-i Lu, Webster, N.Y., assignor to Eastman Kodak Company, Rochester, N.Y.
Filed Mar. 31, 1980, Ser. No. 136,144
Int. Cl.³ B32B *3/26, 5/16*
U.S. Cl. 428—306 **39 Claims**

1. A phosphorescent screen comprising a support and a layer of finely-divided particles of a phosphor dispersed in a cross-linked, void-containing polymeric matrix, said layer having been formed by:
(1) coating said support with a heat-curable composition comprising a suspension of said finely-divided phosphor particles in a viscous liquid composition, said viscous liquid composition comprising a first component that is capable of being heat-cured to form a cross-linked polymeric matrix surrounding said phosphor particles and a second component that is capable of being evaporated to generate voids within said matrix, said first component comprising:
(a) an unsturated crosslinkable polymer,
(b) a polymerizable acrylic monomer,
(c) a thermoplastic polyurethane elastomer, and
(d) a heat-activatable polymerization initiator, and
(2) heating said coating for a time and at a temperature sufficient to cure said first component, to thereby form a cross-linked polymeric matrix surrounding said phosphor particles, and to evaporate said second component, to thereby generate voids within said matrix.

4,298,651
IMAGE WISE DEVELOPABLE SHEET
Geoffrey C. Tutty, Christchurch, New Zealand, assignor to INCA Limited, Christchurch, New Zealand
Division of Ser. No. 79,258, Sep. 27, 1979, which is a continuation-in-part of Ser. No. 930,013, Aug. 1, 1978, abandoned. This application Jul. 9, 1980, Ser. No. 167,434
Claims priority, application New Zealand, Aug. 2, 1977, 184,811; Feb. 8, 1978, 186,415
Int. Cl.³ B41M *5/16, 5/18, 5/20, 5/22*
U.S. Cl. 428—307 **18 Claims**

1. A sheet or film of any configuration which includes a substantially dry coating of a color developable composition comprising a free base of a cationic solvent dye in OH$^-$ form, said dye being capable of developing a color or a more intense color upon reaction with an organic acid developing agent and a binder selected from the group consisting of waxes and resins which (1) are non-polar and non-acid, (2) do not develop said free base and (3) are soluble in ASTM Class 1 solvents, said binder having been mixed with said free base in the presence of a solvent for both said free base and binder, which solvent (1) does not develop said free base, (2) is weakly hydrogen bonded and (3) is classified as a Class 1 (ASTM) solvent.

4,298,652
METHOD OF PRODUCING MEDIUM-GRADE COATED PAPER FOR ROTOGRAVURE PRINTING
Kuzuhiko Suzuki, Nishioomiya; Yasuhiro Fujiki, Ibaraki; Tojiro Kitahori, Kawanishi, and Akira Takada, Kobe, all of Japan, assignors to Kanzaki Paper Mfg. Co., Ltd., Tokyo, Japan
Filed May 8, 1980, Ser. No. 147,825
Claims priority, application Japan, May 11, 1979, 54-58327
Int. Cl.³ B32B *23/08, 27/10;* **D21H** *1/28*
U.S. Cl. 428—323 **13 Claims**

10. Coated paper for rotogravure printing which comprises a paper base having a fiber content comprising 10 to 100 parts by weight of high-yield pulp(s), said high-yield pulp(s) having a 42-mesh fiber fraction content below 30% by weight, said paper base being coated on either or both surfaces with coating composition (A) or (B),
said coating composition (A) comprising pigments containing natural ground calcium carbonate with a specific surface area of 1.5 to 2.5 m^2/g in a proportion of 5 to (90S-137.5)% by weight of the total pigment content thereof, where "S" represents the specific surface area (m^2/g) of natural ground calcium carbonate and principal adhesive of either alkali-sensitive synthetic resin emulsion or a mixture of viscosity increasing agent(s) and alkali-nonsensitive synthetic resin emulsion,
said coating composition (B) comprising pigments containing natural ground calcium carbonate with a specific surface area of 2.5 to 5.0 m^2/g in a proportion of 5 to 100% by weight of the total pigment content, and principal adhesive of either alkali-sensitive resin emulsion or a mixture of viscosity increasing agent(s) and alkali-nonsensitive synthetic resin emulsion.

4,298,653

METHOD FOR PRODUCING AN IMPROVED BUNDLE OF A PLURALITY OF FIBER GLASS STRANDS

John Manghul, Monroeville, Pa., assignor to PPG Industries, Inc., Pittsburgh, Pa.

Continuation of Ser. No. 969,898, Dec. 15, 1978, abandoned. This application Jan. 23, 1980, Ser. No. 114,532

Int. Cl.³ D02G *3/00*

U.S. Cl. 428—378 **12 Claims**

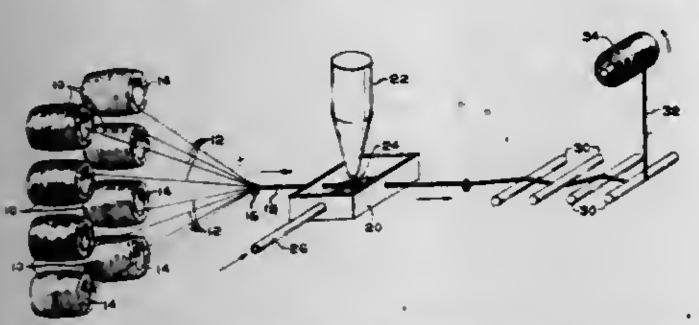

1. A method of providing a small degree of integrity to a plurality of glass fiber strands, wherein each strand is composed of a plurality of glass fibers coated with a sizing composition to protect the fibers from interfiber abrasion, and to provide integrity between the fibers making up the strands, so that the individual glass fiber strands are slightly held together but have reduced coalescence after further processing operations, thereby eliminating the need for a working operation to separate the strands from the plurality of strands, comprising:

(a) removing a plurality of strands of glass fibers from their individual forming packages on which they are collected during forming of the glass fiber strands from molten glass streams flowing from small openings in a bushing;

(b) contacting the plurality of glass fiber strands with solid, fine, particulized, thermoplastic material in a forced gas chamber;

(c) gathering together the plurality of glass fiber strands into a bundle while the glass fiber strands are contacting the thermoplastic material, whereby the contacting and gathering allow the glass fiber strands to have thermoplastic material on one or more of the strands in an amount up to about 0.5 percent by weight of the dried combined strands, wherein the pickup is the result of electrostatic charges on the plurality of glass fiber strands resulting from the removal of the strands from the forming packages;

(d) heating the bundle of the plurality of glass fiber strands containing the thermoplastic material to effect softening of the thermoplastic material to provide a temporary bond between the strands so that a bundle of glass fiber strands is produced wherein the strands are slightly held together.

4,298,654

POWDERED ELASTOMERS AND PROCESS THEREFOR

John C. McCarty, Elyria, and Terrence E. Wagner, Avon Lake, both of Ohio, assignors to The B. F. Goodrich Company, Akron, Ohio

Filed Apr. 28, 1980, Ser. No. 144,100

Int. Cl.³ B32B *5/16*

U.S. Cl. 428—407 **15 Claims**

1. A free-flowing product in the form of powder particles coagulated with a trivalent metal salt coagulant comprising a synthetic elastomeric material having dispersed therein an insolubilized cellulose ether gel and having an adhering layer of a coating resin thereon.

7. Process for preparing a free-flowing product in the form of powder particles comprising adding synthetic elastomeric latex and an alkali metal salt of a water-soluble cellulose ether to a trivalent metal salt coagulating solution, stirring the coagulating solution and the additives therein, adding to the coagulating solution a coating latex, stirring the coagulating solution and the additives therein, and recovering the product in free-flowing powder form.

4,298,655

AQUEOUS SILICONE RESIN COATING COMPOSITION AND SOLID SUBSTRATE COATED THEREWITH

William D. Kray, Burnt Hills, N.Y., assignor to General Electric Company, Waterford, N.Y.

Filed Jul. 28, 1980, Ser. No. 172,954

Int. Cl.³ B32B *27/36*

U.S. Cl. 428—412 **18 Claims**

1. In an aqueous coating composition comprising a dispersion of colloidal silica in an aliphatic alcohol-water solution of the partial condensate of a silanol of the formula $RSi(OH)_3$, wherein R is selected from the group consisting of alkyl having from 1 to 3 carbon atoms and aryl, at least 70 weight percent of the silanol being $CH_3Si(OH)_3$, said composition containing 10 to 50 weight percent solids, said solids consisting essentially of 10 to 70 weight percent colloidal silica and 30 to 90 weight percent of the partial condensate, the improvement comprising the intimate admixture of a small stabilizing of a β-dicarbonyl compound with said composition.

4,298,656

EPOXY-ELASTOMER LOW TEMPERATURE CURABLE, SOLVENTLESS, SPRAYABLE, STATOR WINDING ADHESIVE-BRACING COMPOSITIONS

Morris A. Mendelsohn, Wilkins Township, Allegheny County, Pa., assignor to Westinghouse Electric Corp., Pittsburgh, Pa.

Filed Mar. 28, 1980, Ser. No. 134,730

Int. Cl.³ C08L *63/02*

U.S. Cl. 428—414 **14 Claims**

1. A sprayable, solventless, crack resistant, flexible adhesive-bracing composition, useful for coating stator end windings, comprising the admixture of:

(1) 100 parts by weight of diglycidyl ether of bisphenol A epoxy resin having an epoxy equivalent weight of between about 160 and about 260;

(2) 0 to about 8 parts by weight of a coloring pigment;

(3) about 0.5 to about 4.0 parts by weight of a thixotropic agent;

(4) about 100 to about 200 parts by weight of a secondary amine terminated butadiene/acrylonitrile reactive liquid polymer having a 2-butenylene:cyanoethylene chain segment ratio of between about 3:1 and about 7:1, and a viscosity at 27° C. of between 150,000 cps. and 200,000 cps., and

(5) about 20 to about 40 parts by weight of an amine terminated curing agent not containing cyanoethylene chain segments, to provide a solventless composition.

4,298,657

CORROSION PROTECTION FOR METAL SURFACES

Michael T. Orillion, Baton Rouge, La., assignor to The Dow Chemical Company, Midland, Mich.

Filed Mar. 10, 1980, Ser. No. 128,767

Int. Cl.³ B32B *9/00, 15/04, 15/08*

U.S. Cl. 428—416 **9 Claims**

1. A protective cover for metal surfaces, comprising: a thermal insulation covering the metal surface to reduce the flow of heat between the metal surface and its surroundings; and a composition useful for the corrosion-protection of the metal surface, said composition disposed between the metal surface and the outer surface of the insulation and including a borate salt of an alkali metal, a nitrite salt of an alkali metal, and a molybdate salt of an alkali metal.

4,298,658

VAPOR PERMEATION CURABLE COATINGS BASED ON ALKYD RESINS

Chacko Thankachan, Willowdale; John G. Ritchie, Mississauga; Eugene Sahayada, Toronto, and Asok Sengupta, Downsview, all of Canada, assignors to J.G.L. Chemicals Ltd., Toronto, Canada

Continuation-in-part of Ser. No. 76,680, Sep. 19, 1979, Pat. No. 4,267,239. This application May 1, 1980, Ser. No. 145,704

Int. Cl.³ C08L *91/00;* **B05D** *3/02;* **B32B** *27/40*

U.S. Cl. 428—425.1 **24 Claims**

18. An article comprising a substrate coated with a cured urethane coating derived from a urethane forming composition comprising:

(i) an alkyd resin modified with 2,6-dimethylol-p-cresol to provide side chain aromatic hydroxyl groups on the alkyd resin backbone, and

(ii) at least one organic isocyanate selected from the group consisting of di- and polyisocyanates, said at least one isocyanate having an at least partial aromatic character, wherein

(iii) components (i) and (ii) are present in amounts such that the ratio of active hydroxyl hydrogen groups in (i) to isocyanate groups in (ii) is 1:1 to 1.5.

4,298,659

HELICAL METALLIC RIBBON FOR CONTINUOUS EDGE WINDING APPLICATIONS

Howard H. Liebermann, Schenectady; Peter G. Frischmann, Scotia, both of N.Y., and George M. Rosenberry, Jr., Hendersonville, Tenn., assignors to General Electric Company, Schenectady, N.Y.

Filed Dec. 22, 1978, Ser. No. 972,239

Int. Cl.³ B21C *37/00;* **B21F** *3/00*

U.S. Cl. 428—592 **11 Claims**

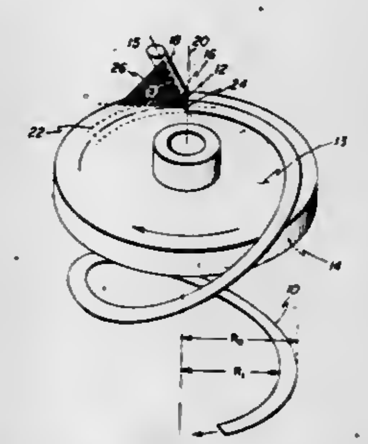

1. A continuous length of cast edge-wound metallic ribbon having a helical shape, a pair of substantially parallel opposed major surfaces, an inner peripheral edge and an outer peripheral edge.

4,298,660

STEEL FIBER FOR REINFORCED CONCRETE

Takeo Nakagawa, Kawasaki, Japan, assignor to Keinosuke Aida, Sagamihara, Japan

Division of Ser. No. 800,031, May 24, 1977, abandoned. This application Dec. 7, 1978, Ser. No. 967,389

Claims priority, application Japan, May 24, 1976, 51-59190

Int. Cl.³ B32B *15/02*

U.S. Cl. 428—599 **6 Claims**

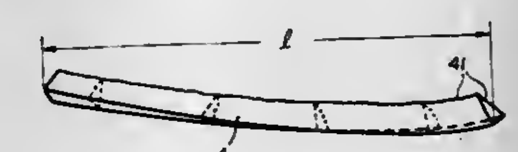

1. A reinforcing material for mixing into concrete to input high strength thereto, produced by directly cutting a surface of a steel block using a milling cutter, said material comprising a steel fiber cut from said block in a direction transverse to movement direction of said cutter and having a triangular lateral cross-section and undulations on one surface thereof, said fiber including a twist in the length thereof and shearing deformations therein wherein the strength of said fiber is increased by a plastic deformation therein, the cross-sectional area being 0.1 to 0.4 mm² and the length being 20 to 50 mm.

5. A reinforcing material for mixing into concrete to input high strength thereto, produced by directly cutting a surface of a steel block using a milling cutter, said material comprising a steel fiber cut from said block in a direction transverse to movement direction of said cutter and having a triangular lateral cross-section and undulations on one surface thereof, said fiber including a plurality of concave and convex portions of the surface thereof, and shearing deformations therein wherein the strength of said fiber is increased by a plastic deformation therein, the cross-sectional area being 0.1 to 0.4 mm² and the length being 20 to 50 mm.

6. A reinforcing material for mixing into concrete to input high strength thereto, produced by directly cutting a surface of a steel block using a milling cutter, said material comprising a steel fiber cut from said block in a direction transverse to movement direction of said cutter and having a triangular lateral cross-section and undulations on one surface thereof, said fiber including step portions at the end thereof and shearing deformations therein wherein the strength of said fiber is increased by a plastic deformation therein, the cross-sectional area being 0.1 to 0.4 mm² and the length being 20 to 50 mm.

4,298,661

SURFACE TREATED STEEL MATERIALS

Teruo Ikeno, Mitaka; Satoshi Kado, Fujisawa; Saburo Ayusawa, Funabashi; Hironobu Kawasaki, Machida, and Takashi Watanabe, Ayase, all of Japan, assignors to Nippon Steel Corporation, Tokyo, Japan

Filed Jun. 1, 1979, Ser. No. 44,485

Claims priority, application Japan, Jun. 5, 1978, 53-67465; Jun. 5, 1978, 53-67466; Jun. 30, 1978, 53-79357; Jul. 20, 1978, 53-88640; Nov. 22, 1978, 53-144439; Nov. 22, 1978, 53-144440

Int. Cl.³ B32B *15/04, 15/18*

U.S. Cl. 428—623 **9 Claims**

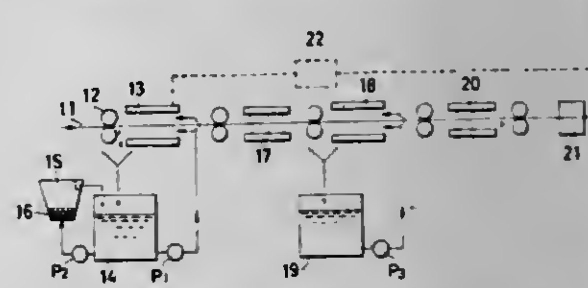

1. A surface treated steel material comprising a manganese coating on the steel material and a film consisting essentially of MnOOH (manganic hydroxide) on the manganese coating.

4,298,662

RESEALABLE VENT VALVE FOR CONTAINERS SUCH AS BATTERIES

Raymond K. Sugalski; John W. Hooke, both of Gainesville, and Paul E. Pate, Branford, all of Fla., assignors to General Electric Company, Gainesville, Fla.

Filed Jul. 31, 1980, Ser. No. 174,147

Int. Cl.³ H01M *10/44*

U.S. Cl. 429—50 **11 Claims**

1. A resealable pressure relief valve capable of relieving the excessive build-up of internal pressure within the closed container of an energy cell by venting gas from within the container to the atmosphere and resealing the container after venting, said valve comprising:

an outer cover plate,
an inner base plate joined to the outer cover plate, a central cavity being formed therebetween; and
a compressed, resilient elastomeric member interposed in the cavity between said plates whereby said elastomeric member is positioned to overlie a vent orifice located in the inner base plate, said elastomeric member being compressed to a degree whereby the elastomeric member forms an air-tight seal over the vent orifice when the internal container pressure is less than a predetermined limit, the shape of the elastomeric member being such that greater compression thereof occurs in the central portion

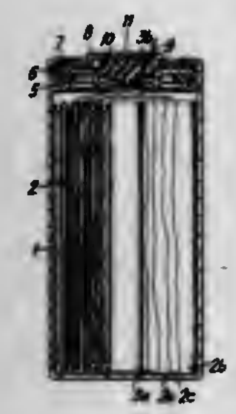

directly above the vent orifice and lesser degree of compression occurs in the peripheral portion of the member; whereby said elastomeric member is capable of becoming deformed or distorted with respect to the inner base plate and breaking its seal over the vent orifice when the internal container pressure exceeds a predetermined limit for the container, said break in the seal over the vent orifice in the inner plate forming a passageway for gases to exit from the interior of the container to the atmosphere, and whereby the elastomeric member has sufficient memory to reseal the vent orifice, when the internal pressure of the container falls below the predetermined limit.

4,298,663
PREDISCHARGED NONAQUEOUS CELL
Peter R. Moses, Windham, N.H., assignor to Duracell International Inc., Bethel, Conn.
Continuation-in-part of Ser. No. 80,891, Oct. 1, 1979, Pat. No. 4,264,689. This application Nov. 5, 1979, Ser. No. 91,149
The portion of the term of this patent subsequent to Apr. 28, 1998, has been disclaimed.
Int. Cl.³ H01M *6/16*
U.S. Cl. 429—50 **24 Claims**

1. A method of stabilizing an electrochemical cell having an active metal anode, a solid active cathode and a nonaqueous electrolyte, said method comprising the step of placing a cathode discharging additive within said cell, said additive being at least partially soluble in said electrolyte and in sufficient quantity to self discharge substantially all of the surface of said active cathode prior to initial discharge of said cell, wherein reaction products of said self discharge are substantially nonreactive within said cell and wherein said additive is placed within said cell by dissolving said additive in said nonaqueous electrolyte.

4,298,664
PHOSPHORUS-CONTAINING SOLID STATE ELECTROLYTE
Ashok V. Joshi, Fishkill; Arun D. Jatkar, Goshen, both of N.Y., and William P. Sholette, Warminster, Pa., assignors to Ray-O-Vac Corporation, Madison, Wis.
Filed Oct. 24, 1980, Ser. No. 200,277
Int. Cl.³ H01M *6/18*
U.S. Cl. 429—191 **11 Claims**

1. A solid state electrolyte comprising an interdiffused mixture of, in mole percent, about 0.4% to about 16% of a material selected from the group of boron triiodide and phosphorus triiodide, about 33% to about 99% lithium iodide and up to about 60% alumina.

4,298,665
CATHODE COMPRISING THE REACTION PRODUCT OF Bi_2O_3 AND WO_3
William P. Evans, Rocky River, and Violeta Z. Leger, North Olmsted, both of Ohio, assignors to Union Carbide Corporation, New York, N.Y.
Filed Jun. 27, 1980, Ser. No. 163,630
Int. Cl.³ H01M *4/48, 6/16*
U.S. Cl. 429—197 **6 Claims**

1. A nonaqueous cell comprising an active metal anode, an organic electrolyte solution and a solid cathode material comprising the reaction product of bismuth trioxide and tungsten trioxide.

4,298,666
COATED OPEN-CELLED MICROPOROUS MEMBRANES
Henry T. Taskier, Fanwood, N.J., assignor to Celanese Corporation, New York, N.Y.
Filed Feb. 27, 1980, Ser. No. 125,195
Int. Cl.³ H01M *2/14*
U.S. Cl. 429—206 **19 Claims**

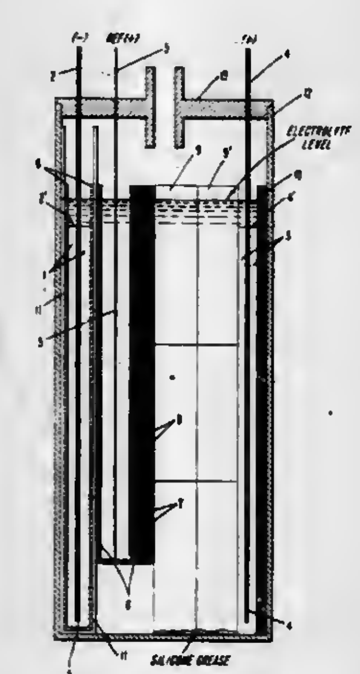

1. At least one open-celled microporous membrane having deposited on at least one surface thereof a uniform porous coating comprising a low hydrogen over-potential material, said microporous membrane prior to deposition of said coating being characterized by an electrical resistance when rendered hydrophilic of not greater than about 15 milliohms-in^2, a reduced bulk density as compared to the corresponding substrate membrane having no open-celled structure, a surface area of at least 10 square meters per gram, and an average pore size of from about 200 to about 10,000 angstroms, said porous coating covering an area which is substantially coextensive with the surface of the microporous substrate membrane on which it is deposited and being characterized by a uniform total thickness of at least 50 angstroms, yet insufficient to cause the electrical resistance of said coat of microporous membrane to exceed about 75 milliohms-in^2, when rendered hydrophilic, said coated microporous membrane having the ability to pass greater than about 0.01 mililiters of water per minute per square centimeter at a water pressure of 100 pounds per square inch gauge.

4,298,667
ELECTRODE COATING COMPOSED OF COPOLYMERS DERIVED FROM DIACETONE ACRYLAMIDE
Guy Rampel, Gainesville, Fla., assignor to General Electric Company, Gainesville, Fla.
Division of Ser. No. 966,745, Dec. 5, 1978, Pat. No. 4,245,016. This application Jun. 9, 1980, Ser. No. 157,313
Int. Cl.³ H01M *2/16*
U.S. Cl. 429—248 **4 Claims**

1. In a battery separator for use in zinc battery cells, the improvement comprising a separator coating consisting essentially of a copolymer derived from diacetone acrylamide and a polymerizable monomer selected from acrylic acid or methacrylic acid.

4,298,668
ALKALINE BATTERY, ELECTROLYTE ABSORBER THEREFOR
George F. Schmidt, Neenah, and Robert E. Weber, Appleton, both of Wis., assignors to Kimberly-Clark Corporation, Neenah, Wis.
Filed Jul. 3, 1980, Ser. No. 165,656
Int. Cl.³ H01M *2/14*
U.S. Cl. 429—250 **11 Claims**

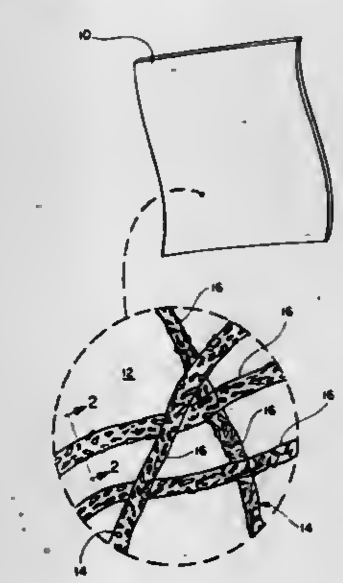

1. An improved electrolyte absorber for use in an alkaline battery cell for physically separating electrodes of said cell and for holding alkaline electrolyte in contact with an electrode during chemical reactions of said cell, in which said absorber comprises a flexible and fibrous polyolefin substrate made up of a plurality of physically entangled microfibers, resistant to strong alkali and oxidation with said substrate being permeable to electrolyte ion transfer, said improvement comprising:
a wetting composition deposited over and adhered to external surfaces of said microfibers, said composition comprising a substantially homogeneous admixture of:
1. a polymeric binder;
2. inert hydrophilic filler particles; and
3. a phosphate ester wetting agent;
the polymeric binder in said composition substantially covering the external surfaces of said microfibers with portions of said filler particles being exposed and protruding through said binder in random distribution, said wetting agent being of the type which when immersed in and in contact with said alkaline electrolyte reacts with said electrolyte to lower the surface tension thereof, said lowered surface tension permitting said reacted electrolyte to rapidly wet said exposed filler particles, the wetting of said filler particles being substantially permanent while immersed in said electrolyte.

4,298,669
ELECTROPHOTOGRAPHIC PROCESS AND APPARATUS
Giichi Marushima; Hiroshi Tanaka; Umi Tosaka, all of Tokyo; Shinkichi Takahashi, Yokohama, and Takao Komiyu, Tokyo, all of Japan, assignors to Canon Kabushiki Kaisha, Tokyo, Japan
Continuation of Ser. No. 298,010, Oct. 16, 1972, abandoned, which is a division of Ser. No. 133,788, Apr. 14, 1971, Pat. No. 3,734,609, which is a division of Ser. No. 563,899, Jul. 8, 1966, Pat. No. 4,071,361. This application Aug. 3, 1979, Ser. No. 63,431
Claims priority, application Japan, Feb. 23, 1966, 41-10915
Int. Cl.³ G03G *13/24, 13/04*
U.S. Cl. 430—55 **3 Claims**

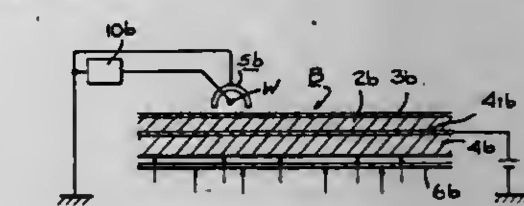

1. A process for forming an electrostatic image of an original on a photosensitive plate having a conductive base, a photoconductive layer overlying said base and exhibiting p-type or n-type semi-conductivity and an insulative layer overlying said photoconducting layer, said conductive base being transparent to activating light for said photoconductive layer and said insulative layer being opaque to said activating light, said photosensitive plate being characterized in having carrier charge of a polarity corresponding to the conductivity type of said photoconductive layer injectable from said conductive base into said photoconductive layer and bound in the region of the interface between said insulative and photoconductive layers, said process comprising the steps of:
(a) applying a first charge of a polarity opposite to the conductivity type of said photoconductive layer substantially uniformly onto said insulative layer by moving a primary corona discharging means over said insulative layer to inject and bind carrier charge in the region of the interface between said insulative and photoconductive layers;
(b) then exposing said photoconductive layer to a pattern of activating image light by scanning an optical system over the original and projecting original image light through said conductive base while applying a corona discharge onto said insulative layer which results in the application of charge of a polarity opposite to that of the initial charge by moving a secondary corona discharging means over said insulative layer, said optical system and said secondary corona discharging means being aligned with respect to the photosensitive plate so as to facilitate their simultaneous operation; and then
(c) exposing said photoconductive layer to activating light by projecting activating light generated from an overall exposure means through said transparent conductive base to discharge bound carrier charge remaining in the region of said interface and form a high contrast electrostatic image.

4,298,670
PHOTOSENSITIVE ELEMENT FOR ELECTROPHOTOGRAPHY
Keiichi Murai, Tokyo, and Takehiko Matsuo, Kawasaki, both of Japan, assignors to Canon Kabushiki Kaisha, Tokyo, Japan
Division of Ser. No. 838,376, Sep. 30, 1977, Pat. No. 4,183,748, which is a continuation of Ser. No. 381,403, Jul. 23, 1973, abandoned. This application Apr. 11, 1979, Ser. No. 29,111
Claims priority, application Japan, Jul. 29, 1972, 47-76145
Int. Cl.³ G03G *5/08, 5/087*
U.S. Cl. 430—67 **9 Claims**

1. A photoconductive element including a photoconductive

layer which comprise photoconductive particles dispersed in a resin binder, said photoconductive particles being formed from inorganic photoconductive particulate material subject to deterioration of its photoconductive properties due to temperature and humidity variations in the presence of surface ionic impurities, said particles being formed by washing said photoconductive material in an aqueous solution containing at least one type of ion exchange resin to solubilize any ionic impurities from the surface of said particulate material and then separating said particulate material from said solution, said photoconductive element being stable against deterioration of its photoconductive properties due to temperature and humidity.

4,298,671

TELLURIUM LAYER ALLOWS VAPOR DEPOSITION OF CRYSTALLINE SELENIUM THEREON IN MAKING DOUBLE LAYER ELECTROPHOTOGRAPHIC RECORD MATERIAL

Karl-Heinz Kassel; Manfred Lutz, both of Warstein; Josef Stuke, Marburg, and Hubert Walsdorfer, Warstein, all of Fed. Rep. of Germany, assignors to Licentia Patent-Verwaltung-G.m.b.H., Frankfurt am Main, Fed. Rep. of Germany

Filed Feb. 16, 1979, Ser. No. 12,858

Claims priority, application Fed. Rep. of Germany, Mar. 1, 1978, 2808757

Int. Cl.[3] G03G *5/05*

U.S. Cl. 430—128 **6 Claims**

1. In a process for producing an electrophotographic recording material composed of a double layer of amorphous and crystallized selenium on an electrically conductive substrate, the improvement comprising applying a layer of tellurium having a thickness of 10 to 500 nm onto the surface of the substrate, and then vapor-depositing selenium at a rate of about 1 μ/min onto said tellurium layer to a thickness of 20 to 100μ while said substrate is at a temperature of 62°-75° C., to form a double layer comprising a crystallized selenium layer overlying the tellurium layer and an amorphous selenium layer overlying the crystallized selenium layer.

4,298,672

TONERS CONTAINING ALKYL PYRIDINIUM COMPOUNDS AND THEIR HYDRATES

Chin H. Lu, Webster, N.Y., assignor to Xerox Corporation, Stamford, Conn.

Filed Jun. 1, 1978, Ser. No. 911,623

Int. Cl.[3] G03G *9/08*

U.S. Cl. 430—108 **12 Claims**

1. A positively charged dry particulate electrostatic toner composition in combination with a particulate carrier, said toner consisting essentially of a resin component, a pigment component and from about 0.1 to 10 percent based on the weight of toner of an alkyl pyridinium compound or its hydrate of the formula:

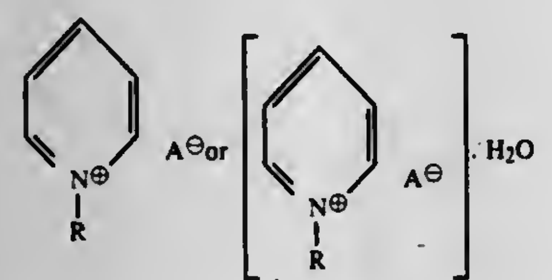

wherein R is a hydrocarbon radical containing from about 15 to about 18 carbon atoms, and A is chloride or bromide.

4,298,673

LITHOGRAPHIC TYPE DIFFUSION TRANSFER DEVELOPING COMPOSITION

Kikuo Kubotera; Eiichi Mizuki; Masato Satomura, all of Asaka; Haruhiko Iwano, and Tadahiro Fujiwara, both of Minami-ashigara, all of Japan, assignors to Fuji Photo Film Co., Ltd., Minami-ashigara, Japan

Continuation of Ser. No. 339,455, Mar. 8, 1973, abandoned. This application Mar. 6, 1978, Ser. No. 884,672

Claims priority, application Japan, Mar. 10, 1972, 47/24533

Int. Cl.[3] G03C *5/54*

U.S. Cl. 430—204 **13 Claims**

1. A process for producing a high contrast image having a sharp toe-gradation which comprises exposing a silver halide light-sensitive material and developing using a diffusion transfer development process for developing the silver halide light-sensitive material and producing an image in an image receiving layer containing diffusion transfer nuclei, the improvement comprising using, as a lithographic type diffusion transfer developer, a developer prepared from a developer composition containing

(1) a developing agent comprising:
  (A) one or more 3-pyrazolidones and/or one or more aminophenols and
  (B) one or more polyhydroxybenzenes;
(2) an alkali;
(3) a silver halide dissolving agent; and
(4) at least one of the amines represented by the following general formulae (I), (II) and (III):

$$H_2N\text{-}C_nH_{2n}\text{-}X \qquad (I)$$

wherein X represents a hydrogen atom, a hydroxy group, a carboxy group or an amino group, n represents an integer of 1-12,

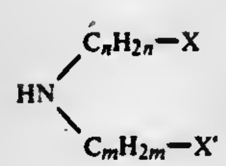

(II)

wherein X and X' represent hydrogen atoms, hydroxy groups, carboxy groups or amino groups, n and m represent integers of 1-12,

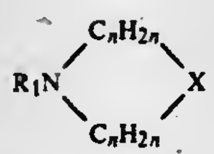

(III)

wherein X represents an oxygen atom, $—CH_2—$ or $—NR_2—$, R_1 and R_2 each represents a hydrogen atom, an alkyl group or substituted alkyl group each having 1-12 carbon atoms or an acyl group of the formula R_3CO- wherein R_3 represents a hydrogen atom or an alkyl group, a substituted alkyl group or an alkenyl group each having 1-12 carbon atoms, and n represents an integer of 2 or 3, and where the recited components of the developer composition are present in the developer composition in proportions such that, in 1 liter of developer prepared from said developer composition, the recited components are present in the following amounts:

(1) developing agent comprising components (A) and (B): about 1.01 g to about 70 g;
(2) alkali: about 1 g to about 200 g;
(3) silver halide dissolving agent: about 1 g to about 100 g; and
(4) amine: 0.5 to 250 g.

4,298,674

COLOR TRANSFER FILM AND PROCESS

Edwin H. Land, Cambridge; Leon D. Cerankowski, Carlisle, and Neil Mattucci, Billerica, all of Mass., assignors to Polaroid Corporation, Cambridge, Mass.

Continuation-in-part of Ser. No. 33,001, Apr. 24, 1979, abandoned. This application Apr. 24, 1980, Ser. No. 143,293

Int. Cl.[3] G03C *5/54*

U.S. Cl. 430—213 **69 Claims**

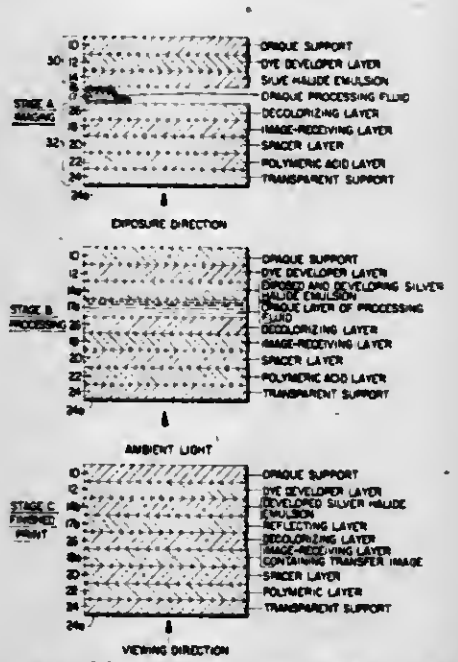

1. A photographic process comprising providing a layer of a viscous aqueous alkaline processing composition between a first sheet-like element and a second sheet-like element; said first sheet-like element comprising an opaque support carrying an exposed silver halide emulsion; said second sheet-like element comprising a transparent support carrying an image-receiving layer; said processing composition comprising a light-reflecting pigment and at least one light-absorbing optical filter agent, said optical filter agent being a pH-sensitive dye; said application of said processing composition being effective to develop said exposed silver halide emulsion and to form a visible image in said image layer, the combination of said light-reflecting pigment and said optical filter agent being effective to prevent transmission through said processing composition layer of light actinic to said silver halide emulsion during development thereof; the layer of said second sheet-like element in contact with said processing composition layer containing a substantially nondiffusible decolorizing agent adapted to reduce, without pH reduction, the light-absorbing ability of said optical filter agent immediately adjacent the interface between said layer and said processing composition without reducing the light-absorbing ability of said optical filter agent within said processing composition, whereby the transmission density of said processing composition layer is substantially unchanged but the surface of said processing composition layer viewable through said transparent support appears substantially white substantially immediately after said processing composition is applied.

4,298,675

NOVEL POLYMERIC MORDANTS FOR PHOTOGRAPHIC DYES

Lloyd D. Taylor, Lexington, Mass., assignor to Polaroid Corporation, Cambridge, Mass.

Filed Dec. 3, 1979, Ser. No. 99,755

Int. Cl.[3] G03C *1/40, 5/54, 7/00*

U.S. Cl. 430—213 **50 Claims**

1. A diffusion transfer film unit which comprises a photosensitive system comprising at least one photosensitive silver halide emulsion layer having associated therewith a diffusion transfer process image dye-providing material and an image-receiving layer adapted to receive an image dye-providing material after photoexposure and processing, said image-

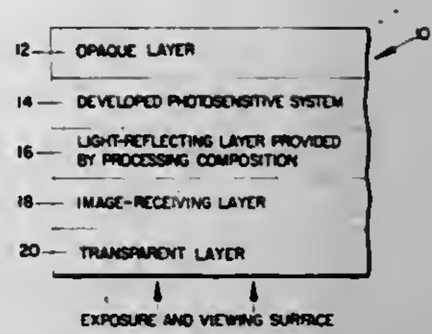

receiving layer comprising a linear aromatic polymeric mordant having recurring phenylene ether units of the formula:

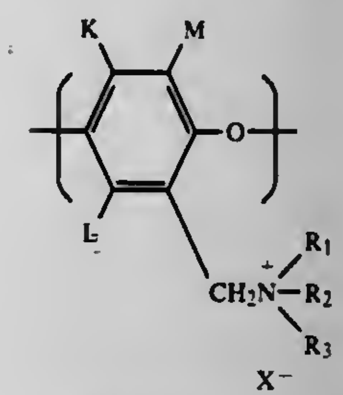

where K and L are independently hydrogen; lower alkyl; cycloalkyl; lower alkoxy; aryl; aryloxy; aralkyl; alkaryl; or halogen; M is hydrogen; lower alkyl; cycloalkyl; lower alkoxy; aryl; aryloxy; aralkyl; alkaryl; halogen; or

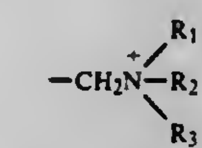

R_1, R_2, and R_3 are independently lower alkyl; substituted lower alkyl; aryl; cycloalkyl; aralkyl; alkaryl; or at least two of R_1, R_2, and R_3 and the nitrogen atom to which they are bonded constitute a substituted or unsubstituted N-containing heterocyclic ring; and X^- is an anion.

4,298,676

OPTICAL FILTER AGENTS AND PHOTOGRAPHIC PRODUCTS AND PROCESSES CONTAINING SAME

Derek H. R. Barton, Gif-sur-Yvette, France; Irena Y. Bronstein-Bonte, Newton, and Lloyd D. Taylor, Lexington, both of Mass., assignors to Polaroid Corporation, Cambridge, Mass.

Filed Oct. 29, 1979, Ser. No. 89,559

Int. Cl.[3] G03C *1/40, 1/84, 1/10, 5/54*

U.S. Cl. 430—221 **45 Claims**

4. A photographic film unit for forming a diffusion transfer image which comprises in combination:

a photosensitive element comprising an opaque support carrying at least one photosensitive silver halide emulsion layer, each said silver halide emulsion layer having associated therewith a dye image-forming material; an image-receiving element comprising a transparent support carrying at least a polymeric image-receiving layer dyeable by said dye image-forming material, said image-receiving element being adapted to exposure therethrough of said photosensitive element and being in a superposed fixed relation to said photosensitive element with said supports outermost; a rupturable container releasably holding an aqueous alkaline processing composition, said rupturable container being positioned so as to release said processing composition for distribution between said dyeable poly-

meric layer and said photosensitive element adjacent thereto upon application of pressure to said container after photoexposure of said photosensitive element; and disposed in said film unit in said processing composition and/or in a layer intermediate said photosensitive element

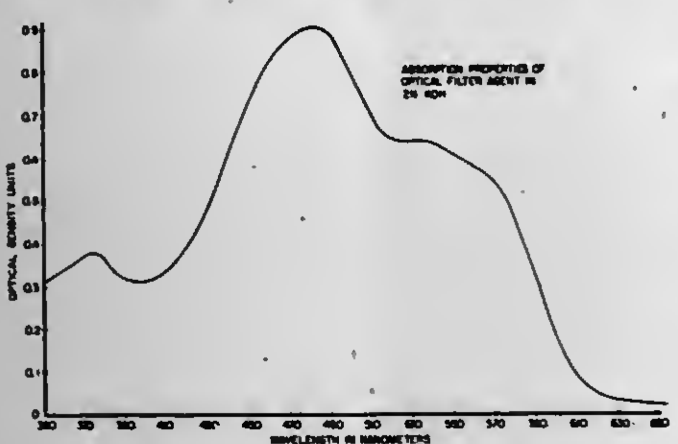

and said image-receiving element, an optical filter agent having a light-absorbing capability at a pH above the pKa of the optical filter agent effective to absorb at least a portion of actinic radiation within a predetermined range, said optical filter agent comprising a compound of the formula:

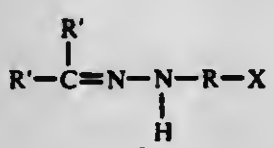

where R is a group which provides a carbon-to-carbon double bond for conjugation with the

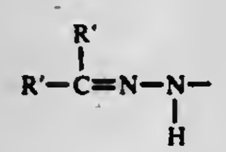

portion of the compound to provide said light-absorbing capability for the compound at a pH above the pKa of the compound, X represents a substituent of R providing at least one electron-withdrawing group and each R' is a substituent which does not impair the light-absorbing capability of the compound at a pH above the pKa of the compound or both R' groups together complete a cyclic moiety which does not impair said light-absorbing capability.

4,298,677
DIFFUSION TRANSFER PHOTOGRAPHIC PROCESS
Yoshihiro Takagi, and Masakado Sakai, both of Minami-ashigara, Japan, assignors to Fuji Photo Film Co., Ltd., Minami-ashigara, Japan
Filed Jun. 9, 1980, Ser. No. 158,035
Claims priority, application Japan, Jun. 7, 1979, 54-72102
Int. Cl.³ G03C *5/54*
U.S. Cl. 430—244 **13 Claims**

1. A diffusion transfer photographic process comprising imagewise exposing a silver halide photosensitive emulsion layer and processing with an alkali processing solution in the presence of a silver halide solvent, a silver halide developing agent, said silver halide of said emulsion layer, and a development solubilization promoter that forms an insoluble complex compound by reaction with said silver halide of said emulsion layer, to form a black and white negative transfer image on an image-receiving layer,
wherein the improvement comprises using a silver halide photosensitive emulsion layer wherein the silver halide in the emulsion layer is silver iodobromochloride or silver iodobromide wherein the iodide comprises from 10 to 20 mole% of the halide content thereof.

4,298,678
PHOTOSENSITIVE COMPOSITIONS AND ELEMENTS CONTAINING SUBSTITUTED HYDROXYLAMINE
Mark R. McKeever, Sayre, Pa., assignor to E. I. Du Pont de Nemours and Company, Wilmington, Del.
Filed Aug. 14, 1980, Ser. No. 178,089
Int. Cl.³ G03C *1/52, 1/68*
U.S. Cl. 430—281 **16 Claims**

1. A photosensitive composition comprising an admixture of
(A) a photooxidant compound,
(B) a leuco dye that is oxidizable to dye by the photooxidant, and
(C) a hydroxylamine compound of the formula R_1R_2NOH, and acid salts thereof, wherein each of R_1 and R_2 can be hydrogen with the proviso that both cannot be hydrogen, a linear or branched-chain alkyl group of 2 to 14 carbon atoms, a cyclic alkyl group of 5 to 14 carbon atoms, an aryl group of 6 to 10 carbon atoms, an aralkyl group wherein the aryl moiety is of 6 to 10 carbon atoms and the alkyl moiety is of 1 to 14 carbon atoms, and an alkaryl group wherein the aryl moiety is of 6 to 10 carbon atoms and the alkyl moiety is of 1 to 9 carbon atoms, and R_1 and R_2 when taken together may with the nitrogen atom form a heterocyclic ring of 5 to 7 carbon atoms.

4,298,679
LIGHT-SENSITIVE COMPOSITION
Fomiaki Shinozaki; Yasuo Washigawa; Tomoaki Ikeda; Sho Nakao, and Syunichi Kondoh, all of Asaka, Japan, assignors to Fuji Photo Film Co., Ltd., Kanagawa, Japan
Division of Ser. No. 832,864, Sep. 13, 1977, Pat. No. 4,175,971. This application Jul. 12, 1979, Ser. No. 57,149
Claims priority, application Japan, Sep. 14, 1976, 51-110151
Int. Cl.³ G03C *1/68*
U.S. Cl. 430—281 **4 Claims**

1. A light-sensitive composition consisting essentially of at least one ester of an ethylenically unsaturated double bond-containing organic acid and an aliphatic polyhydric alcohol, said ester having a molecular weight of about 1000 or less, and a photopolymerization initiator, said photopolymerization initiator consisting essentially of a combination of the components
(1) benzanthrone, a benzanthrone substituted with one or more of halogen atoms, alkyl groups having 1 to 5 carbon atoms or alkoxy groups having 1 to 5 carbon atoms, a 1,2-benzanthraquinone or a benzanthraquinone substituted with one or more of halogen atoms, alkyl groups having 1 to 5 carbon atoms or alkoxy groups having 1 to 5 carbon atoms, or a mixture thereof and
(2) a compound represented by the following general formula (c)

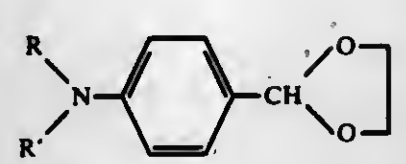
(c)

wherein R and R', which may be the same or different, each represents a methyl group or an ethyl group, wherein the weight ratio of component (1) to component (2) of said photopolymerization initiator ranges from about 10:1 to about 1:100 and the amount of said photopolymerization initiator ranges from about 0.1 to about 20% by weight to the weight of the ester.

4,298,680
METHOD AND APPARATUS FOR MANUFACTURING SEAMLESS PRINTING ROLL
Vogel Bruno, Einbec, Fed. Rep. of Germany, assignor to N.V. APR Europe S.A., Brussels, Belgium
Filed Dec. 28, 1979, Ser. No. 108,096
Claims priority, application Japan, Feb. 14, 1979, 54-15824
Int. Cl.³ G03C *5/00;* **G03B** *27/04, 27/22*
U.S. Cl. 430—300 **14 Claims**

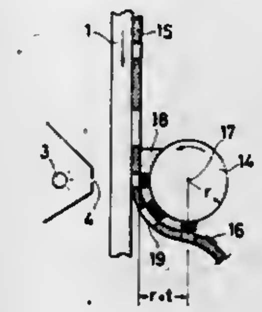

1. A method in which a photosensitive layer is formed on a process cylinder to a predetermined thickness and simultaneously subjected to image-forming exposure for manufacturing a seamless printing roll comprising the steps of supplying a photosensitive liquid-type resin to the space between a process cylinder and a rigid plate which is transparent to actinic light, providing a relative translational movement between said rigid plate and a rotational axis of said cylinder, simultaneously rotating said cylinder in synchronization with said translational movement, and, exposing said photosensitive layer in said space.

4,298,681
N,N DISUBSTITUTED P-PHENYLENEDIAMINE PHOSPHATES TO FORM A COLOR DEVELOPER WORKING SOLUTION, A COLOR DEVELOPER CONCENTRATE CONTAINING SUCH A PHOSPHATE AND A METHOD OF USING SAID WORKING SOLUTION FOR COLOR DEVELOPMENT OF COLOR FILM
David K. Bulloch, Hillsdale, and Hong Z. Kim, Bergenfield, both of N.J., assignors to Philip A. Hunt Chemical Corp., Palisades Park, N.J.
Filed Feb. 23, 1973, Ser. No. 335,343
The portion of the term of this patent subsequent to Apr. 1, 1992, has been disclaimed.
Int. Cl.³ G03C *5/30*
U.S. Cl. 430—466 **7 Claims**

1. A stable color developer concentrate essentially consisting of a concentrated water solution of a 4-amino-N-ethyl, N-beta methanesulfonamidoethyl-[n]m-toluidene salt of a phosphoric acid selected from the group consisting of orthophosphoric acid, pyrophosphoric acid and polyphosphoric acid containing the equivalent of from about 105% to about 115% orthophosphoric acid, said salt being present in an amount such that the 4-amino-N-ethyl, N-beta methanesulfonamidoethyl-[n]m-toluidene constitutes from 50% to 65% weight per unit volume of the concentrate.

4,298,682
PHOTOGRAPHIC ELEMENT HAVING OVERCOATING OF IONIC POLYESTER IN HYDROPHILIC COLLOID
John F. Bishop, Rochester, N.Y., assignor to Eastman Kodak Company, Rochester, N.Y.
Filed Aug. 1, 1980, Ser. No. 174,421
Int. Cl.³ G03C *1/76*
U.S. Cl. 430—533 **11 Claims**

1. In a photographic element comprising a support having thereon at least one photosensitive silver halide emulsion layer having associated therewith a dye image-providing material, the improvement wherein said element has, over said emulsion layer, an overcoat layer comprising an ionic polyester in a hydrophilic colloid at a weight ratio of 1:5 to 10:1, said polyester comprising recurring units of:
(I) a diol component which comprises:
(a) at least 50 mole percent of units derived from diols having the structures:
(i)

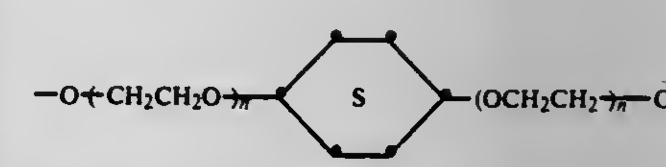

wherein n is an integer of from 1 to 4; and
(ii) O—(RO)—$_m$, wherein m is an integer of from 2 to 4, and R is an alkylene group of 2 to about 4 carbon atoms; and
(b) 0 to 50 mole percent of units derived from one or more diols having the structure:

—O—R¹—O—

wherein R^1 is an alkylene group of up to about 16 carbon atoms, a cycloalkylene group of 6 to about 20 carbon atoms, a cycloalkylenebisalkylene group of 8 to about 20 carbon atoms, an arylenebisalkylene group of 8 to about 20 carbon atoms, or an arylene group of 6 to about 12 carbon atoms; and
(II) an acid component which comprises:
(a) 8 to 30 mole percent of units derived from one or more ionic dicarboxylic acids, said units having the structures:

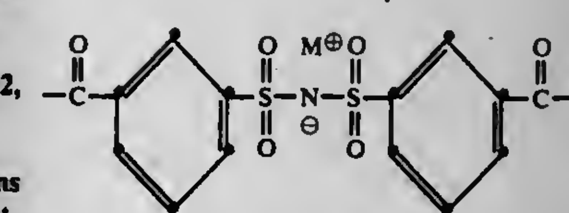

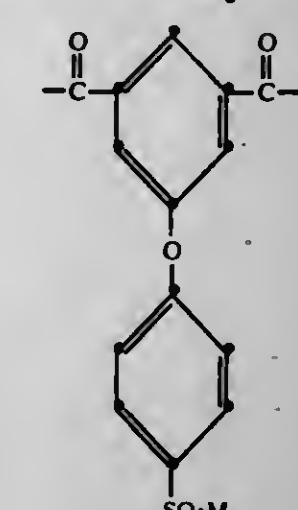

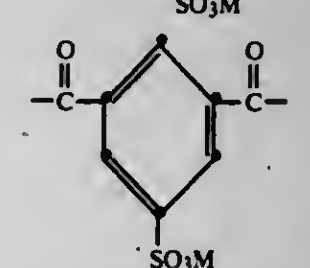
, and

-continued

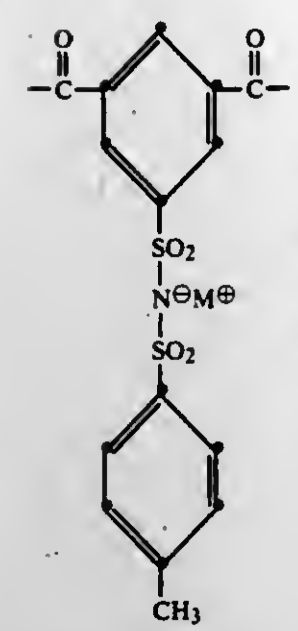

wherein M is ammonium or a monovalent metal; and

(b) 70 to 92 mole percent of recurring units derived from other diacids.

4,298,683

LIGHT-SENSITIVE PHOTOGRAPHIC MATERIAL

Manfred Becker; Angela Slabik, both of Leverkusen; Bruno Mücke, Bergisch-Gladbach; Erik Moisar, Cologne, and Harald von Rintelen, Leverkusen, all of Fed. Rep. of Germany, assignors to AGFA-Gevaert Aktiengesellschaft, Bayerwerk-Leverkusen, Fed. Rep. of Germany

Continuation-in-part of Ser. No. 971,501, Dec. 20, 1978, abandoned. This application Jul. 6, 1979, Ser. No. 55,481

Claims priority, application Fed. Rep. of Germany, Dec. 29, 1977, 2758711

Int. Cl.³ G03C *1/52*

U.S. Cl. 430—569 **8 Claims**

8. A process for the preparation of photographic materials having at least one light-sensitive silver halide emulsion layer of silver halide grains

comprising the steps of first precipitating silver halide crystals from a reaction mixture in a first precipitate volume, and forming a limited number of silver nuclei in a first phase of crystal formation, at a pH of 5–6.5 in the presence of at least one water-soluble imidazole in a sufficient amount of imidazole to produce increased grains of silver halide as light-sensitive crystals and corresponding to the following formula:

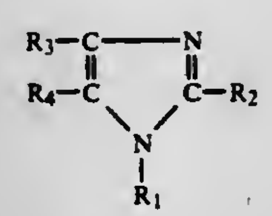

in which

R^1, R^2, R^3 and R^4 which may be the same or different represent hydrogen or an alkyl, alkenyl, aryl or aralkyl group which may be substituted by hydroxyl, cyano and alkoxy groups and free or esterified carboxyl and/or sulfoalkyl groups and is free of a heteroaromatically bound nitrogen, and together with the imidazole nucleus could form a multiple ligand for silver ions, nor contains a thia group —S—;

immediately growing in a second phase of crystal formation silver halide crystals on said limited number of nuclei in the presence of said imidazole, wherein said imidazole inhibits the formation of additional silver nuclei.

and subsequently removing the imidazole from the second ripening volume so that to provide said silver halide emulsion free of a heteroaromatically bound nitrogen and then casting the imidazole-free emulsion on a support.

4,298,684

REFLECTIVE DATA STORAGE MEDIUM MADE BY SILVER DIFFUSION TRANSFER IN SILVER-HALIDE EMULSION INCORPORATING NUCLEI

Eric W. Bouldin, Woodside, and Jerome Drexler, Los Altos Hills, both of Calif., assignors to Drexler Technology Corporation, Mountain View, Calif.

Division of Ser. No. 55,270, Jul. 6, 1979. This application Jun. 20, 1980, Ser. No. 161,342

Int. Cl.³ G03C *5/54;* **G02B** *27/22*

U.S. Cl. 430—616 **1 Claim**

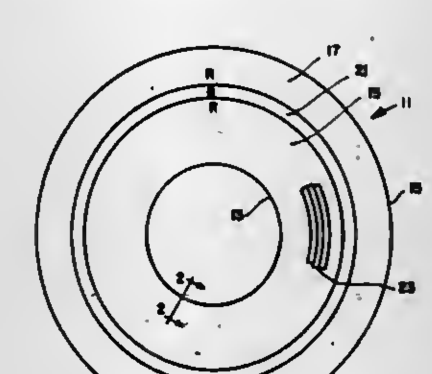

1. A method of making a reflective laser recording medium from an unexposed photosensitive silver-halide emulsion layer incorporating a surface layer of high volume concentration silver precipitating nuclei having a size primarily less than five hundredths of a micron therein, the emulsion being disposed on a substrate with the nuclei layer disposed in said emulsion comprising,

defining laser recording area in the silver-halide emulsion,

contacting the unexposed and undeveloped photosensitive silver-halide emulsion layer incorporating the surface layer of silver precipitating nuclei with an aqueous monobath comprising a weak silver-halide developing agent and a rapid-acting silver-halide solvent for reacting with unexposed and undeveloped silver halide to form soluble silver ion complexes which are transported by diffusion transfer to the silver precipitating nuclei within said emulsion layer where the silver of said silver ion complexes is precipitated and adsorbed on said nuclei in the presence of said developer acting as a reducing agent, to the extent that a layer of aggregate and individual silver particles is formed exhibiting reflectivity of at least 15%.

4,298,685

DIAGNOSTIC REAGENT

Indu Parikh, and Pedro Cuatrecasas, both of Chapel Hill, N.C., assignors to Burroughs Wellcome Co., Research Triangle Park, N.C.

Filed May 3, 1979, Ser. No. 35,619

Claims priority, application United Kingdom, May 4, 1978, 17749/78

Int. Cl.³ C12N *9/96;* **G01N** *33/54*

U.S. Cl. 435—7 **18 Claims**

1. A process for the quantitative determination of a biological substance in a test sample comprising,

(a) mixing said test sample, a soluble enzyme-labelled form of said biological substance, and a soluble biotin-tagged antibody raised against said biological substance,

(b) incubating the mixture under conditions suitable for forming an antibody-biological substance complex,

(c) then adding isolubilized avidin, separating the resulting solid phase from the liquid phase, and

(d) determining the enzyme activity of either of said phases.

11. A kit for use in enzyme immunoassay comprising,

(a) a quantity of enzyme-labelled biological substance,

(b) a quantity of biotin-tagged antibody raised against said biological substance,

(c) a quantity of insolubilized avidin, and

(d) a quantity of substrate for said enzyme,

wherein said quantity of biotin tagged antibody is sufficient to bind a substantial quantity of the enzyme-labelled substance, said quantity of insolubilized avidin is present in excess of the amount required to precipitate the biotin tagged antibody, and said quantity of said substrate is sufficient to react with said enzyme label to produce a detectable signal.

4,298,686

METHOD OF IMMUNOENZYMATIC ASSAY UTILIZING Δ_5,3-KETO-STEROID ISOMERASE

Jean C. Nicolas; Beatrice Terouanne; Bernard Descomps, and Andre C. De Paulet, all of Montpellier, France, assignors to Institut National de la Sante et de la Recherche Medicale (INSERM), Paris, France

Filed Jul. 25, 1979, Ser. No. 60,677

Claims priority, application France, Aug. 2, 1978, 78 22867

Int. Cl.³ G01N *33/54;* **C12N** *9/96*

U.S. Cl. 435—7 **16 Claims**

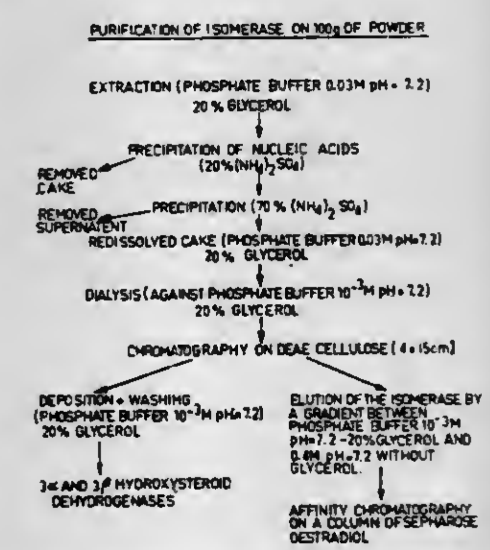

1. In an enzyme immuno assay for a peptide wherein a sample suspected of containing said peptide is admixed with an assay reagent containing an antibody capable of binding said peptide and a peptide-enzyme conjugate under conditions such that a bound species and a free species of said enzyme-conjugate are formed and wherein the enzymatic activity of the bound and/or free species is determined, the improvement comprising: using a Δ_5, 3-keto-steroid isomerase-peptide as the enzyme-peptide conjugate, wherein the conjugate is prepared by reacting the peptide with methyl-4-mercapto-butyrimide, reacting Δ_5, 3-keto-steroid isomerase with S-acetylmercaptosuccinic anhydride; and then coupling the resulting products by a disulfide bridge to form the conjugate containing one mole of peptide and one mole of enzyme.

12. In an enzyme immuno assay for a steroid wherein a sample suspected of containing said steroid is admixed with an assay reagent containing an antibody capable of binding said steroid and a steroid-enzyme conjugate under conditions such that a bound species and a free species of said enzyme-conjugate are formed and wherein the enzymatic activity of the bound and/or free species is determined, the improvement comprising: using a Δ_5, 3-keto-steroid isomerase-steroid as the enzyme-steroid conjugate, wherein the conjugate is prepared by reacting the steroid with bromoacetic acid, reacting Δ_5, 3-keto-steroid isomerase with S-acetylmercaptosuccinic anhydride; and then coupling the resulting products by a thiol bridge to form the conjugate.

15. A reagent for use in an enzyme immuno assay for a peptide comprising Δ_5, 3-keto-steroid isomerase from *P. testosteroni,* having free -SH groups and having a specific activity higher than 30,000 IU/mg, coupled to the peptide, wherein coupling to the peptide is effected by reacting the peptide with methyl-4-mercapto-butyrimide, reacting said isomerase with S-acetylmercaptosuccinic anhydride; and then coupling the resulting products by a disulfide bridge to form a conjugate containing one mole of peptide and one mole of enzyme.

4,298,687

PROCESS FOR THE DETERMINATION OF COMPOUNDS SHOWING AMONG THEMSELVES SPECIFIC BINDING AFFINITIES BY THE USE OF A SOLID PHASE

Roland Maes, 2, Ave. d'Alsace, 67 000 Strasburg, France

Filed Oct. 16, 1979, Ser. No. 85,438

Claims priority, application France, Oct. 31, 1978, 78131279

Int. Cl.³ C12Q *1/66*

U.S. Cl. 435—7 **9 Claims**

1. A process for the determination of compounds having specific binding affinities by the steps comprising adding to a solution containing the compound to be determined, a soluble primary binding partner capable of specific binding affinity with such compound and in a predetermined amount exceeding the quantity of the compound to be determined, whereby excess primary binding partner remains free in solution after completion of the specific binding reaction; specifically adsorbing such excess specific binding partner in a solid phase consisting of a polyacrylamide gel which has been activated by a dialdehyde, a trioxane, or paraldehyde and then sensitized by a compound having specific binding affinity for the primary binding partner, the amount of said sensitized solid phase being sufficient to adsorb thereon all of said excess primary binding partner; deactivating the thus-sensitized solid phase with a deactivating compound carrying NH_2 groups, chosen among the group consisting of hydroxylamine, acrylamide, glutamine, acetamide and formamide and then revealing the extent of said adsorption of said excess primary binding partner on said sensitized solid phase by reacting the adsorbed primary binding partner with a labeled binding partner having specific binding affinity for said primary binding partner and measuring the amount of reacted labeled binding partner.

4,298,688

TEST DEVICE FOR THE DETECTION AND DETERMINATION OF GLUCOSE

Karl-Heinz Kallies, Sebnitz, German Democratic Rep., assignor to Veb Arzneimittelwerk Dresden, Radebeul, German Democratic Rep.

Filed Aug. 20, 1979, Ser. No. 68,323

Claims priority, application German Democratic Rep., Jul. 25, 1978, 206900

Int. Cl.³ C12Q *1/54*

U.S. Cl. 435—14 **11 Claims**

1. A test strip for the detection and determination of the concentration of glucose in samples of body fluids containing in addition Albumin, blood pigments or Vitamin C as interferants comprising, a carrier strip capable of transporting fluid therealong and which is separated into three zones arranged one above the other in the order indicated: (a) a measuring zone for receiving a predetermined amount of the test sample impregnated with at least one member of the group consisting of marking agents, coloring agents, oxidation agents, buffers and precipitating agents for binding and elimination of interferants, (b) a reaction zone containing glucose oxidase that will catalyze the oxidation of a glucose substiate, and (c) a detection zone containing peroxidase and an indicator for providing a visible response for accurately determining the level of glucose in the test sample.

4,298,689
GONORRHEA DIAGNOSTIC TEST
Ronald J. Doyle, Jefferson Town; Kenneth F. Keller, Anchorage, and Robert L. Schaefer, Louisville, all of Ky., assignors to Research Corporation, New York, N.Y.
Filed Sep. 25, 1978, Ser. No. 945,211
Int. Cl.² C12Q *1/04*
U.S. Cl. 435—34 **18 Claims**

1. A method for detecting the presence of *Neisseria gonorrhoeae* microorganisms which comprises contacting, at a pH of from 4 to 10, a sample suspected of containing a *Neisseria gonorrhoeae* microorganism with a plant lectin, the said lectin being characterized as one which reacts specifically with N-acetylglucosamine and testing resulting mixture for the presence of a reaction product formed by reaction between the lectin and N-acetylglucosamine on the cell surface of said *Neisseria gonorrhoeae* microorganism, wherein the presence of such reaction product is a presumptive indication of the presence of a *Neisseria gonorrhoeae* microorganism.

4,298,690
ANTIBIOTICS XK-62-3 AND XK-62-4 AND PROCESS FOR PRODUCTION THEREOF
Takao Iida, Tokyo; Kunikatsu Shirahata, Machida; Shinzo Ishii, Shizuoka; Ryo Okachi, Machida, and Takashi Nara, Tokyo, all of Japan, assignors to Kyowa Hakko Kogyo Co., Ltd., Tokyo, Japan
Filed May 16, 1978, Ser. No. 906,333
Claims priority, application Japan, May 19, 1977, 52-57827; Jul. 13, 1977, 52-83038
Int. Cl.³ C12P *19/48;* C12N *1/20;* C12R *1/29*
U.S. Cl. 435—80 **10 Claims**

1. A process for producing antibiotic compounds XK-62-3 and XK-62-4, which comprises culturing a microorganism of the genus Micromonospora and which is capable of producing at least one of said compounds in a nutrient medium until substantial antibacterial activity is detected in the culture liquor and thereafter isolating at least one of said compounds therefrom.

4,298,691
PREPARATION OF HETEROPOLYSACCHARIDE S-156
George T. Veeder, San Diego, and Kenneth S. Kang, LaJolla, both of Calif., assignors to Merck & Co., Inc., Rahway, N.J.
Filed Sep. 5, 1980, Ser. No. 184,597
Int. Cl.³ C12P *19/04*
U.S. Cl. 435—101 **7 Claims**

1. A process for producing heteropolysaccharide S-156 which comprises growing the organism ATCC 31646 in an aqueous nutrient medium by aerobic fermentation of an assimilable carbohydrate source and recovering said heteropolysaccharide S-156.

4,298,692
FERMENTATION PROCESS FOR PRODUCING A RIFAMYCIN DERIVATIVE
Thomas Schupp, Möhlin; Peter Traxler, Allschwil, and Jakob Nüesch, Arlesheim, all of Switzerland, assignors to Ciba-Geigy Corporation, Ardsley, N.Y.
Filed Jan. 17, 1980, Ser. No. 112,898
Claims priority, application Switzerland, Jan. 25, 1979, 750/79; Jun. 21, 1979, 5804/79
Int. Cl.³ C12P *17/18*
U.S. Cl. 435—119 **5 Claims**

1. A process for the production of a rifamycin derivative by cultivating, under aerobic conditions in an aqueous nutrient medium containing a carbon source, a nitrogen source and mineral salts, a strain of *Nocardia mediterranei*, which is derived from *Streptomyces mediterranei* ATCC 13 685 as the parent strain, characterised in that a recombinant strain Nocardia mediterranei which is resistant to streptomycin and autotrophic with respect to amino acids is cultivated and at least one compound of the group consisting of 3-hydroxyrifamycin S, 3,31-dihydroxyrifamycin S and 1-desoxy-1-oxarifamycin S,

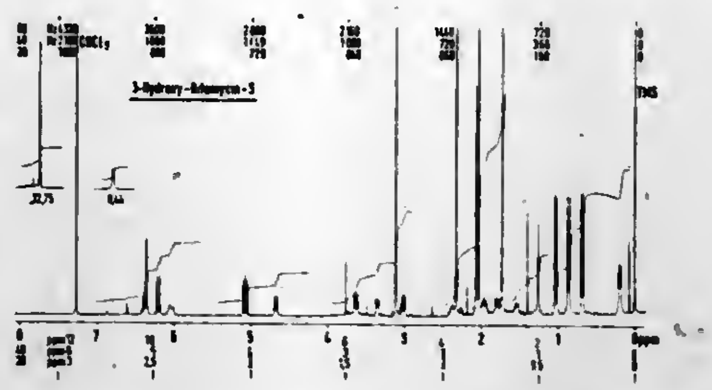

is isolated from the fermentation medium by physico-chemical means of separation.

4,298,693
FERMENTATION APPARATUS
Michael W. Wallace, Rt. 2, Box 53, Dustin, Okla. 74839
Filed Jul. 29, 1980, Ser. No. 173,356
Int. Cl.³ C12M *1/02, 1/12*
U.S. Cl. 435—305 **33 Claims**

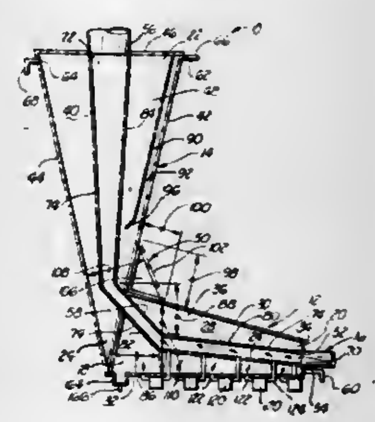

1. A fermentation apparatus for continuous fermentation of a sugar containing material to produce beer, the fermentation apparatus comprising:

a substantially horizontally disposed fermentation chamber having a first end and a second end;

a substantially vertically disposed separation chamber having an upper end and a lower end, the lower end of the separation chamber connected to the first end of the fermentation chamber such that the separation chamber is in fluid communication with the fermentation chamber;

mash directing means disposed in the fermentation chamber and the separation chamber, having a first end adjacent the second end of the fermentation chamber and having a second end adjacent the upper end of the separation chamber, for directing mash introduced at the first end through the fermentation chamber and out of the fermentation chamber adjacent its second end, and for directing such mash into the separation chamber adjacent its lower end, and for directing such mash through the separation chamber and out the separation chamber at the second end of the mash directing means, the mash directing means being adapted to retain the mash therein;

mash transporter means for powering movement of mash from the first end to the second end of the mash directing means;

circulating means for circulating a yeast-containing slurry in the fermentation chamber into contact with the mash in the mash directing means; and

gas separating means positioned within the separation chamber for collecting gases generated by fermentation of the mash and separating such gases from the beer so produced.

4,298,694
PROCESS AND A PLANT FOR PREPARING A GAS RICH IN METHANE
Allan Skov, Lyngby, Denmark, assignor to Haldor Topsoe A/S, Lyngby, Denmark
Filed Dec. 3, 1979, Ser. No. 99,361
Claims priority, application Denmark, Dec. 12, 1978, 55711/78
Int. Cl.³ C07C *1/04*
U.S. Cl. 518—704 **6 Claims**

1. A process for preparing a methane-rich gas mixture by catalytic treatment at elevated temperature and pressure of a feed gas which contains hydrogen as the predominant component, is rich in carbon oxides and optionally contains gases selected from the class consisting of nitrogen and the inert gases, comprising the steps of

(a) dividing the feed gas into two streams, viz. a first feed gas part stream comprising 30–70% by volume of the total feed gas stream and a second feed gas part stream comprising the remainder of the feed gas,

(b) subjecting the first feed gas part stream to a catalytic methanation in at least one adiabatic methanation reactor containing a methanation catalyst,

(c) cooling the effluent gas stream from the adiabatic methanation reactor to 250°–400° C. with saturated steam produced in the cooled methanation reactor according to step (e),

(d) mixing the cooled effluent stream of step (c) with the second feed gas part stream to form a combined stream,

(e) subjecting the combined stream from step (d) to a catalytic methanation in at least one methanation reactor cooled by water under production of saturated steam and, containing a methanation catalyst, and

(f) recovering at least part of the effluent from the cooled methanation reactor as a product gas.

4,298,695
CONVERSION OF SYNTHESIS GAS WITH IRON-CONTAINING CATALYST
Stephen A. Butter; Arthur W. Chester, both of Cherry Hill, N.J., and Albert B. Schwartz, Philadelphia, Pa., assignors to Mobil Oil Corporation, New York, N.Y.
Continuation-in-part of Ser. No. 970,300, Sep. 18, 1978, abandoned. This application Feb. 11, 1980, Ser. No. 120,243
Int. Cl.³ C07C *1/00*
U.S. Cl. 518—720 **10 Claims**

1. A process for converting synthesis gas comprising carbon monoxide and hydrogen to a naphtha having a boiling range of less than 400° F. at a 90% overhead while producing no more than 30 weight percent of methane plus ethane, based on total hydrocarbons, which comprises:

a. contacting said synthesis gas at a temperature of from about 500° to 600° F. and at a pressure of from 50–1000 psig with a catalyst composition prepared by forming a homogenous mixture of either metallic iron powder or iron oxide powder having a particle size no greater than about 200 microns, a hydrogel matrix and an acidic crystalline aluminosilicate zeolite having a silica-to-alumina ratio of at least 12, a pore size greater than about 5 Angstrom units, and a constraint index of about 1 to 12, drying said mixture and treating it with carbon monoxide or synthesis gas mixtures containing carbon monoxide and hydrogen at atmospheric pressure and at temperatures of about 550°–650° F. for periods of time ranging from about ½ hour up to about 24 hours, provided that said dried mixture is calcined in an oxygen-containing gas at temperatures ranging from about 250° F. to about 1100° F. prior to said carbon monoxide treatment when metallic iron is employed to form said mixture and

b. obtaining said naphtha in an amount which is at least 50 weight percent of the total hydrocarbons produced.

4,298,696
REGENERATION OF ION EXCHANGE MATERIALS
James R. Emmett, Brewood, England, assignor to Northern Engineering Industries, Ltd., New Castle upon Tyne, England
Continuation-in-part of Ser. No. 907,029, May 17, 1978, abandoned. This application Mar. 31, 1980, Ser. No. 135,920
Claims priority, application United Kingdom, May 27, 1977, 22417/77
Int. Cl.³ B01J *49/00*
U.S. Cl. 521—26 **11 Claims**

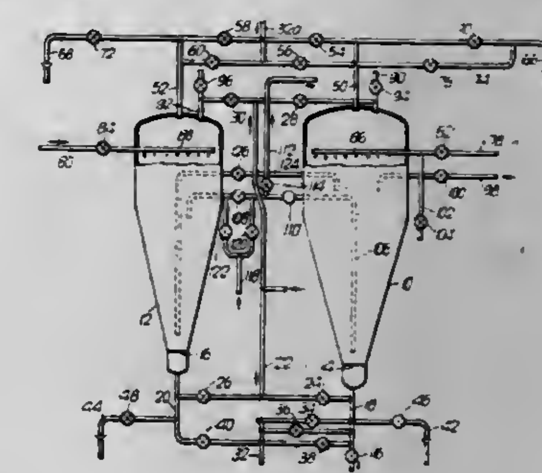

6. A method of performing repeated cycles of regeneration of anion and cation ion exchange materials comprising in each cycle passing a mixture of the materials into a separator vessel containing a perforate barrier beneath the materials and having an elongate conduit having an inlet adjacent the barrier and an outlet within a second vessel above a perforate barrier therein, passing water upwardly within the separator vessel to classify the materials into superimposed uppermost, intermediate and lowermost layers, passing water into said separator vessel and upwardly through said barrier and concurrently causing water to flow through said conduit to transfer material from said separator vessel to said second vessel, automatically operating valve means to isolate said outlet from said inlet in response to automatic detection of a fall in conductivity of the flow through the conduit caused by a transition between cation and anion materials and after a first volume being at least a major proportion of material of the lowermost layer has passed into said second vessel and so as to segregate a second volume being material from the intermediate layer, the flow from said separator vessel being diverted, after said valve means has operated, to pass said second volume initially into said conduit and thence into a third vessel, regenerating and re-mixing the materials of the uppermost and lowermost layers and returning them to service while said second volume is segregated, and returning material from said third vessel to said separator vessel to be joined by exhausted materials for regeneration therewith in the next regeneration cycle.

4,298,697
METHOD OF MAKING SHEET OR SHAPED CATION EXCHANGE MEMBRANE
Stanley K. Baczek, and G. Howard McCain, both of Painesville, Ohio, assignors to Diamond Shamrock Corporation, Dallas, Tex.
Filed Oct. 23, 1979, Ser. No. 87,331
Int. Cl.³ C08K *5/02;* C08J *5/22*
U.S. Cl. 521—27 **16 Claims**

1. A method of forming shaped polymeric material polymerized from at least two monomers, one said monomer consisting essentially of at least one fluorinated vinyl compound and said other monomer consisting essentially of at least one monomer of the structure

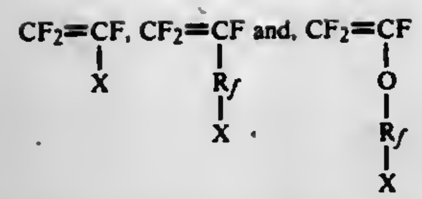

wherein R_f is a bifunctional perfluorinated radical containing from two to eight carbon atoms, which carbon atoms may be interrupted by one or more oxygen atoms and X is selected from the group consisting of sulfonyl fluoride, carbonyl fluoride, sulfonate ester, and carboxylate ester, comprising: dissolving said polymeric material in at least one solvent selected from the group consisting of low molecular weight polymers of perhalogenated alkylethers, low molecular weight polymers of perhalogenated alkyls and perfluorokerosenes, each having boiling points between about 200° C. and 350° C.; shaping said dissolved polymeric material; and thereafter stripping said solvent therefrom to resolidify said polymeric material in the shaped form.

4,298,698

METHOD FOR MANUFACTURE OF ION-EXCHANGE GRAFT MEMBRANE

Kaoru Kawase, Nagoya, and Kiyoshi Hayakawa, Gifu, both of Japan, assignors to Agency of Industrial Science & Technology and Ministry of International Trade & Industry, both of Tokyo, Japan

Filed Oct. 30, 1979, Ser. No. 89,402

Claims priority, application Japan, Nov. 6, 1978, 53-137145

Int. Cl.³ B01J *47/12;* **C08F** *2/54*

U.S. Cl. 521—27 **9 Claims**

1. A method for the manufacture of an ion-exchange graft polymer membrane without the use of an organic solvent, which method comprises:

dissolving in water (a) a hydrophilic polymer selected form the group consisting of polyvinyl alcohol having a polymerization degree of 500 to 2000 and an acetification degree of 0% to 20%, methyl cellulose having a methylation degree of 3% to 10% and ethyl cellulose having an ethylation degree of 10% to 25%, and (b) at least one member selected from the group consisting of the alkali metal salts of α-alkyl acryl acids and alkaline earth metal salts of α-alkyl acryl acids;

pouring the resultant solution onto a substrate and drying the covered substrate such that a film of said hydrophilic polymer is formed in which at least one of said acryl salts is dispersed; and

exposing said film to ionizing high energy radiation or ultraviolet radiation, thereby causing said at least one acryl salt to graft copolymerize onto said hydrophilic polymer within said film.

4,298,699

PROCESS FOR PRODUCING FLUORINATED POLYMER HAVING ION-EXCHANGE GROUPS

Tatsuro Asawa; Haruhisa Miyake, both of Yokohama; Masami Yamashita, Yokosuka, and Yoshio Sugaya, Yokohama, all of Japan, assignors to Asahi Glass Company, Ltd., Tokyo, Japan

Filed Feb. 7, 1980, Ser. No. 119,521

Int. Cl.³ B01J *39/20*

U.S. Cl. 521—31 **11 Claims**

1. A process for producing a fluorinated copolymer having ion-exchange groups, comprising:

copolymerizing a fluorinated ethylenic unsaturated monomer and a monomer having a carboxylic acid group or group convertible to a carboxylic acid group in an aqueous solution in the presence of a polymerization initiator;

treating the particles of copolymer product obtained with an alcohol at a temperature greater than 20° C.; and

drying said alcohol treated particles, thereby substantially removing said alcohol from said particles.

4,298,700

CROSSLINKED BASIC POLYMER AND PREPARATION THEREOF

Kunio Takase, Tochigi, Japan, assignor to Rohm and Haas Company, Philadelphia, Pa.

Filed Jun. 8, 1979, Ser. No. 47,182

Int. Cl.³ C08F *8/30, 12/26;* **B01J** *39/20*

U.S. Cl. 521—32 **11 Claims**

1. A crosslinked basic polymer predominating in repeating units of the formula:

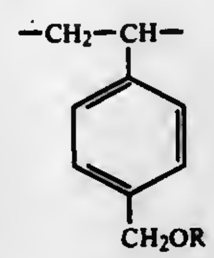

wherein R is

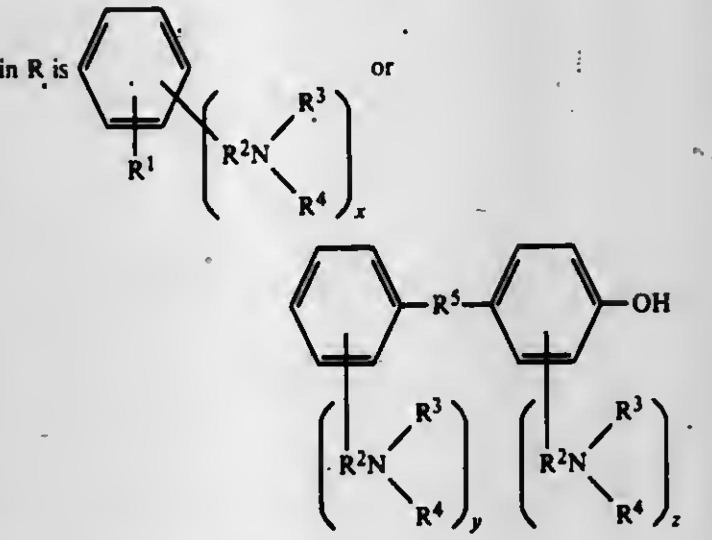

wherein x, y and z are integers of from 1 to 3, R^1, R^3 and R^4 independently are hydrogen or alkyl, and R^2 and R^5 are each alkylene.

4,298,701

PROCESS FOR THE PRODUCTION OF ELASTIC SHAPED ARTICLES

Holger Meyborg, Odenthal, and Christian Weber, Cologne, both of Fed. Rep. of Germany, assignors to Bayer Aktiengesellschaft, Leverkusen, Fed. Rep. of Germany

Filed Apr. 14, 1980, Ser. No. 139,921

Claims priority, application Fed. Rep. of Germany, Apr. 24, 1979, 2916485

Int. Cl.³ C08G *18/14, 18/32*

U.S. Cl. 521—51 **8 Claims**

1. A process for the production of elastic, shaped articles which comprises reacting a reaction mixture comprising:

(a) organic polyisocyanates;

(b) polyhydroxy polyethers having a molecular weight of from 1,000 to 12,000;

(c) aromatic diamines or polyamines as chain-extending agents; and

(d) catalysts for the reaction between hydroxyl and isocyanate groups;

said reaction mixture being processed as one-shot systems by the reaction injection molding technique and said reactants being used in quantities corresponding to an isocyanate index of from 70 to 130, characterized in that component (b) comprises polyhydroxy polyethers from 10 to 80% by weight of the polyether chains therein consisting of ethylene oxide units and at least 50% of the hydroxyl groups consisting of secondary hydroxyl groups.

4,298,702

PROCESS FOR THE MANUFACTURE OF FLAME RETARDANT POLYSTYRENE FOAMS

Klaus Hahn, Lampertheim; Klaus Hinselmann, Mutterstadt; Klaus Halbritter, Mannheim; Walter Rebafka, Eppelheim, and Heinz Weber, Gruenstadt, all of Fed. Rep. of Germany, assignors to BASF Aktiengesellschaft, Ludwigshafen, Fed. Rep. of Germany

Filed Aug. 4, 1980, Ser. No. 175,157

Claims priority, application Fed. Rep. of Germany, Aug. 9, 1979, 2923403

Int. Cl.³ C08V *9/14*

U.S. Cl. 521—79 **10 Claims**

1. In a process for the manufacture of a flame-retardant polystyrene foam by melting polystyrene in an extruder, mixing the polystyrene at a temperature over 180° C. with 5 weight percent to 20 weight percent, based on the weight of polystyrene, of a volatile blowing agent and 0.5 weight percent to 10 weight percent, based on the weight of polystyrene, of an organic halogen compound extruding the mixture into the surrounding atmosphere, and subsequently cooling the foam, the improvement which comprises adding from 0.01 weight percent to 5 weight percent, based on the weight of polystyrene, of a dialkyl-tin carboxylate, and 0.01 weight percent to 5 weight percent, based on the weight of polystyrene, of a barium and/or cadmium carboxylate to the mixture.

4,298,703

FIRE-RETARDANT IMIDE COPOLYMERS

Adolph V. DiGiulio, and Jack N. Bauer, both of Pittsburgh, Pa., assignors to ARCO Polymers, Inc., Philadelphia, Pa.

Division of Ser. No. 147,664, May 7, 1980. This application Dec. 5, 1980, Ser. No. 213,751

Int. Cl.³ C08J *9/00*

U.S. Cl. 521—88 **6 Claims**

1. A fire-retardant foam composition having a density of between 1 and 10 pounds per cubic foot and consisting of a copolymer of 50 to 95 mole percent of a monovinyl aromatic monomer and 5 to 50 mole percent of an imide derivative of an ethylenically unsaturated dicarboxylic acid monomer, from 10 to 20 parts per hundred parts of copolymer of an at least tribrominated diphenylether, and 4 to 8 parts per hundred parts of copolymer of a metal oxide synergist for the ether.

4,298,704

FIRE-RETARDANT MONOCARBOXYLIC ACID AMIDE COPOLYMERS

Adolph V. DiGiolio, and Jack N. Bauer, both of Pittsburgh, Pa., assignors to ARCO Polymers, Inc., Philadelphia, Pa.

Division of Ser. No. 147,036, May 7, 1980. This application Dec. 8, 1980, Ser. No. 214,891

Int. Cl.³ C08J *9/00*

U.S. Cl. 521—88 **5 Claims**

1. A fire-retardant foam composition having a density of between 1 and 10 pounds per cubic foot and consisting of a copolymer of 50 to 95 mole percent of a monovinyl aromatic monomer and 50 to 5 mole percent of an ethylenically unsaturated monocarboxylic acid amide monomer, from 10 to 20 parts per hundred parts of copolymer of an at least tribrominated diphenylether, and 4 to 8 parts per hundred parts of copolymer of a metal oxide synergist for the ether.

4,298,705

RUBBER-MODIFIED FIRE-RETARDANT IMIDE COPOLYMERS

Adolph V. DiGiulio, Pittsburgh, Pa., assignor to Arco Polymers, Inc., Philadelphia, Pa.

Division of Ser. No. 147,665, May 7, 1980. This application Dec. 8, 1980, Ser. No. 214,893

Int. Cl.³ C08J *9/00*

U.S. Cl. 521—88 **6 Claims**

1. A fire-retardant foam composition having a density of between 1 and 10 pounds per cubic foot and consisting of a rubber-modified copolymer, from 10 to 20 parts per hundred parts of copolymer of an at least tribrominated diphenylether, and 4 to 8 parts per hundred parts of copolymer of a metal oxide synergist for the ether; said rubber-modified copolymer comprising (a) 5 to 40 weight percent of a rubber, selected from the group consisting of homopolymers of the conjugated dienes such as butadiene, isoprene, chloroprene and piperylene; copolymers of said conjugated diene with up to 50 weight percent of one or more monoolefinically unsaturated monomers such as styrene, substituted styrenes, acrylonitrile, methacrylonitrile and isobutylene; ethylenepropylene-diene terpolymer rubbers; acrylate-diene copolymer rubbers; and mixtures thereof and (b) 60 to 95 weight percent of a copolymer of 50 to 95 mole percent of a monovinyl aromatic monomer and 5 to 50 mole percent of an imide derivative of an ethylenically unsaturated dicarboxylic acid monomer.

4,298,706

FOAMS PREPARED FROM POLYPROPYLENE RESIN COMPOSITION AND PROCESS FOR PRODUCING SAME

Takashi Ueno, and Kyoichi Nakamura, both of Osaka, Japan, assignors to Kanegafuchi Kagaku Kogyo Kabushiki Kaisha, Osaka, Japan

Filed Sep. 18, 1979, Ser. No. 76,614

Claims priority, application Japan, Sep. 18, 1978, 53-114756

Int. Cl.³ B29D *27/00*

U.S. Cl. 521—92 **19 Claims**

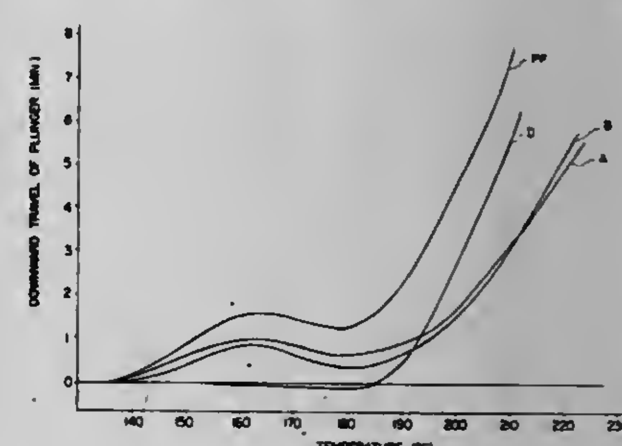

1. A foam of polypropylene resin composition prepared from a composition comprising a mixture of (1) polypropylene resin and (2) 5-50 parts by weight per 100 parts by weight of the polypropylene resin of 1,2-polybutadiene resin which contains at least 70% of vinyl structure (1,2-bonds) and has an intrinsic viscosity (η) of at least 0.7 dl/g measured in toluene at 30° C. and a melting point of not lower than 40° C.; the foam being characterized in that it contains hot xylene insoluble thermal reaction products of 1,2-polybutadiene of at least 2% by weight based on the whole composition, and a hot xylene soluble content of 1,2-polybutadiene of up to 30% by weight based on the whole composition.

4,298,707

AMINE TERMINATED POLYMERS AND THE FORMATION OF BLOCK COPOLYMERS

William L. Hergenrother; Richard A. Schwarz; Richard J. Ambrose, all of Akron, and Robert A. Hayes, Cuyahoga, all of Ohio, assignors to The Firestone Tire & Rubber Company, Akron, Ohio

Division of Ser. No. 848,962, Nov. 7, 1977, Pat. No. 4,151,222, which is a continuation-in-part of Ser. No. 574,676, May 5, 1975, Pat. No. 4,070,344. This application Mar. 5, 1979, Ser. No. 17,788

Int. Cl.³ C08J *9/00*

U.S. Cl. 521—95 **6 Claims**

1. A nylon block copolymer foam composition, comprising:

an amine terminated polymer connected to a nylon polymer constituent to form the nylon block copolymer composition;

said amine terminated polymer being an end capped polymer formed by the reaction of an anionically prepared polymer and a single polyisocyanate or polyisothiocyanate compound so that at least one unreacted isocyanate or isothiocyanate end portion exists wherein said unreacted isocyanate or isothiocyanate end portion has been converted to an amine group;

said polymer being a homopolymer or a copolymer, said homopolymer made from monomers selected from the class consisting of conjugated dienes and vinyl substituted aromatics, said copolymer made from monomers of conjugated dienes and vinyl substituted aromatics;

said polyisocyanate and said polyisothiocyanate having the formula

$$R-(N{=}C{=}X)_n$$

wherein R is an aliphatic containing from 2 to about 20 carbon atoms, a cycloaliphatic containing from 4 to about 20 carbon atoms, an aromatic containing from 6 to about 20 carbon atoms, and combinations thereof, n is 2 and X is selected from the class consisting of oxygen and sulfur;

said nylon constituent made from monomers selected from the class consisting of (a) anionically polymerizable lactams having from 3 to 15 carbon atoms, (b) diacid chlorides reacted with diamines, and (c) diacids reacted with diamines so that salts thereof are formed;

the amount of said nylon polymer constituent ranging from about 5 percent to about 95 percent by weight based upon the total weight of said block copolymer; and

from 0.5 to about 50 parts by weight of a blowing agent per 100 parts by weight of said block copolymer.

4,298,708

AMINATED ALKOXYLATED ALIPHATIC ALCOHOL SALTS AS POLYISOCYANURATE CATALYSTS

Heinz Schulze; Robert L. Zimmerman, and Carter G. Naylor, all of Austin, Tex., assignors to Texaco Development Corp., White Plains, N.Y.

Division of Ser. No. 26,270, Apr. 2, 1979, Pat. No. 4,235,811. This application May 9, 1980, Ser. No. 148,098

Int. Cl.³ C08G *18/14, 18/20*

U.S. Cl. 521—115 **2 Claims**

1. In a process for preparing a cellular polymer containing recurring isocyanurate and urethane linkages, which polymer comprises the reaction product obtained by bringing together in the presence of a blowing agent, a polyether or polyester polyol, and aromatic polyisocyanate, and an isocyanurate group formation catalyst, the improvement which comprises utilizing as said isocyanurate catalyst a salt represented by the following structural formula:

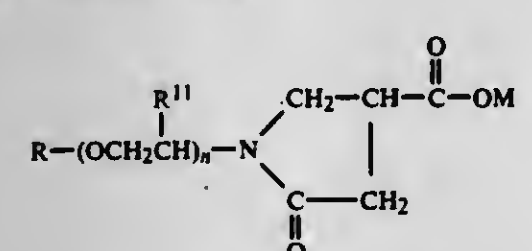

where R is a C_8 to C_{14} alkyl groups and mixtures thereof or R'-benzyl where R' is a C_6 to C_{12} alkyl group; R'' is hydrogen or methyl; n is 0 to 20; and M is a Group Ia metal.

4,298,709

POLYHYDROXYL POLYETHER COMPOUNDS CONTAINING PHOSPHORUS AND POLYMERIC RESINS PREPARED THEREFROM

Sally P. Ginter, Sanford; Chester E. Pawloski, Bay City, and Violete L. Stevens, Midland, all of Mich., assignors to The Dow Chemical Company, Midland, Mich.

Filed Jun. 25, 1980, Ser. No. 162,707

Int. Cl.³ C08G *18/14*

U.S. Cl. 521—169 **5 Claims**

1. A polymeric condensation resin comprising the reaction product of:

(a) at least one polyhydroxyl polyether of the formula

$$R(\{C_2H_3(Y)O\}_m X)_n$$

where

R is the residue left by the removal of n active hydrogen atoms from an initiator compound for alkylene oxide polymerization RH_n;

Y is independently —H, $-CH_3$, $-C_2H_5$, $-CH_2Cl$, $-CH_2CCl_3$, $-CH_2Br$,

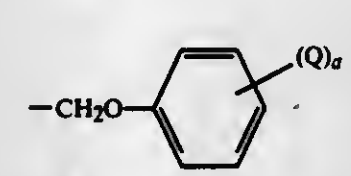

where Q is independently —Cl or —Br and a = 1-5, or $-CH_2OX$ where X is independently —H or

$$-\underset{R''}{\underset{|}{\overset{\overset{O}{\|}}{P}}}-R'$$

and R' and R'' are each independently alkyl, phenyl, haloalkyl, halophenyl, alkoxy, haloalkoxy, polyhaloalkoxy, polyhalophenoxy alkoxy, dialkylamino, arylamino, halophenoxy, or alkylhalophenoxy of up to about 20 carbons;

provided that at least one Y is $-CH_2OH$ and at least one Y is

$$-CH_2-O-\underset{R''}{\underset{|}{\overset{\overset{O}{\|}}{P}}}-R'\ ;$$

and

m and n are integers such that m is at least 2, n being 1-8; and

(b) a polyfunctional chain-forming compound containing functional groups reactive with hydroxyl groups of the polyhydroxyl polyether to yield the polymeric condensation resin.

4,298,710

ANTISTATIC RESIN COMPOSITION

Masaki Ohya; Akio Kobayashi; Takeo Ogiwara, and Yoshikatsu Satake, all of Iwaki, Japan, assignors to Kureha Kagaku Kogyo Kabushiki Kaisha, Tokyo, Japan

Filed Aug. 30, 1979, Ser. No. 71,377

Claims priority, application Japan, Sep. 6, 1978, 53-109285

Int. Cl.³ C08F *279/02*

U.S. Cl. 525—5 **9 Claims**

1. An antistatic resin composition with an anti-washing property comprising:

(1) 100 parts of a nitrile copolymer comprising

(A) 7 to 100% of a nitrile graft copolymer with a graft ratio of 4 to 50% obtained by polymerizing

(a) 20 to 95 parts of a monomer mixture of 20 to 90% of an

unsaturated nitrile and 10 to 80% of at least one vinyl and/or vinylidene monomer copolymerizable therewith in the presence of

(b) 5 to 80 parts of a rubber trunk polymer predominantly comprising a conjugated diolefin,

the sum of the quantities of the monomer mixture and the rubber trunk polymer amounting to 100 parts, and

(B) 0 to 93% of a nitrile random copolymer containing 20 to 90% of an unsaturated nitrile; and

(2) 0.05 to 10 parts of one or more antistatic agents selected from the group consisting of anionic, cationic, nonionic, nonionic-anionic, and amphoteric surfactants; all quantities in terms of parts and percentages being by weight wherein the rubber trunk polymer is dispersed in a resin matrix in a mutually bridged state, said resin matrix being a free copolymer formed from that portion of the monomer mixture which is not grafted onto the rubber trunk polymer, or a combination of ssid free copolymer and the nitrile random compolymer.

4,298,711

LOW SHRINK UNSATURATED POLYESTER RESINOUS COMPOSITION

Thomas J. Moulson, and John E. Greenzweig, both of Minneapolis, Minn., assignors to Cargill Incorporated, Minneapolis, Minn.

Filed Apr. 9, 1980, Ser. No. 138,660

Int. Cl.³ C08L *67/00*

U.S. Cl. 525—40 **7 Claims**

1. A low shrink polyester resin which is a product of

(a) mixing from about 25 to about 35 parts by weight of a member selected from the group consisting of maleic acid, fumaric acid, their anhydrides and mixtures thereof,

from about 5 to about 25 parts by weight of a member selected from the group consisting of isophthalic acid, phthalic acid, their anhydrides, and mixtures thereof,

from about 10 to about 40 parts by weight propylene glycol,

from about 10 to about 30 parts by weight dipropylene glycol,

from about 5 to about 30 parts by weight propylene glycol terephthalate,

(b) heating said mixture at about 420° F. until a neat resin is formed with an acid number of from about 5 to about 50; and

(c) diluting the neat resin with from about 25 to about 100 parts by weight of a member selected from the group consisting of styrene, vinyl toluene and mixtures thereof.

4,298,712

ADHESIVE BLENDS OF ELASTOMER, POLYOLEFIN, AND GRAFT OF POLYETHYLENE WITH UNSATURATED FUSED RING ANHYDRIDES

John Machonis, Jr., Schaumburg; Seymour Schmukler; Robert J. Zeitlin, both of Palatine, and Mitsuzo Shida, Barrington, all of Ill., assignors to Chemplex Company, Rolling Meadows, Ill.

Continuation-in-part of Ser. No. 681,480, Apr. 29, 1976, abandoned. This application Aug. 1, 1977, Ser. No. 820,611

Int. Cl.³ C08F *255/02;* **C08L** *9/00, 23/04, 33/00*

U.S. Cl. 525—74 **13 Claims**

1. A modified polyolefin blend having improved adhesion to various substrates and consisting essentially of:

(a) about 0.1-95 parts by weight in said blend of a graft copolymer of about 70-99.999 wt.% of a high density polyethylene backbone grafted with about 30-0.001 wt.% of at least one compound containing at least one member of the group consisting of x-methylbicyclo(2.2.1)hept-5-ene-2,3-dicarboxylic acid anhydride and bicyclo(2.2.1-)hept-5-ene-2,3-dicarboxylic acid anhydride blended with both

(b) at least one elastomer of the class consisting of homopolymers of isobutylene, copolymers of isobutylene, homopolymers of chloroprene, copolymers of a diene and a vinyl aromatic compound, block copolymers of a diene and a vinyl aromatic compound, copolymers of a hydrogenated diene and a vinyl aromatic compound, hydrogenated block copolymers of a diene and a vinyl aromatic compound, homopolymers of butadiene, and a copolymer of an ethylenically unsaturated nitrile and a diene, and

(c) at least one polyolefin resin of the class consisting of homopolymers of ethylene, copolymers of ethylene and an ethylenically unsaturated ester, and copolymers of ethylene and alpha-olefin.

4,298,713

PROCESS FOR PREPARING LOW DENSITY ETHYLENE COPOLYMERS

Yoshinori Morita; Akinori Toyota, and Norio Kashiwa, all of Iwakuni, Japan, assignors to Mitsui Petrochemical Industries, Ltd., Tokyo, Japan

Filed Dec. 26, 1979, Ser. No. 106,736

Claims priority, application Japan, Dec. 28, 1978, 53-161203

Int. Cl.³ C08F *2/06, 4/16*

U.S. Cl. 525—323 **12 Claims**

7. The process of claim 1 or claim 5 wherein in the pretreatment step (i), the reaction temperature ranges from about −40° C. to about 80° C., and said alpha-olefin contains from 3 to 6 carbon atoms, and the amount of the crystalline poly(alpha-olefin) formed is in the range of from about 0.05 to about 20 grams, per gram of the titanium catalyst component (A).

4,298,714

MODIFIED POLYVINYLCHLORIDE

Gideon Levin, and David Vofsi, both of Rehovot, Israel, assignors to Yeda Research & Development Co. Ltd., Rehovot, Israel

Filed Dec. 16, 1980, Ser. No. 217,144

Int. Cl.³ C08F *114/06*

U.S. Cl. 525—330 **8 Claims**

1. A modified polyvinyl chloride wherein part of the chlorine atoms are substituted by groups of the formula

$$-S-CH_2-CH_2-R-(CH_2-CH_2-R)_n-Alk$$

wherein R, which may be identical or different, designates oxygen, sulfur, —NH— or a bond, wherein Alk designates alkyl of up to 14 carbon atoms, and wherein n is an integer of from 1 to 100 or zero.

4,298,715

POLYAMINE/EPIHALOHYDRIN REACTION PRODUCTS

Donald N. Van Eenam, Des Peres, Mo., assignor to Monsanto Company, St. Louis, Mo.

Filed Mar. 1, 1978, Ser. No. 882,493

Int. Cl.³ C08F *8/18, 8/34, 8/40*

U.S. Cl. 525—340 **3 Claims**

1. A process for the production of an acid stabilized resin solution which process comprises

(1) polymerizing an aqueous solution of a diallylamine hydrohalide salt having the formula $(CH_2{=}C(R)-CH_2NHR'^{+}X^{-}$ wherein the R groups are the same or different and are selected from hydrogen and lower alkyl groups, R' is selected from hydrogen, alkyl and substituted alkyl groups and X^- is a halide ion, either alone or as a mixture with other copolymerizable monomers in the presence of a free radical catalyst to form a polymer in which from 5 to 100% of the recurring units are derived from the diallylamine;

(2) raising the pH of the solution sufficiently to convert at least part of the residual unpolymerized monomeric amine salt to free amine but not so high as to precipitate the polyamine from solution;

(3) separating the free amine monomer from the polyamine solution;

(4) reacting the polyamine with from about 0.5 to about 1.5

moles of an epihalohydrin per mole of amine present in said polymer at a temperature of about 30° to about 80° C. and a pH from about 7 to about 9.5 to form a water-soluble resinous reaction product containing epoxide groups; and

(5) reacting the resinous reaction product in aqueous solution, with from about 0.3 equivalents to about 1.2 equivalents per equivalent of epihalohydrin of a water-soluble acid selected from the group consisting of hydrogen halide acids, sulfuric acid, nitric acid, phosphoric acid, formic acid and acetic acid until the epoxide groups are converted substantially to the corresponding halohydrin groups and an acid-stabilized resin solution is obtained.

4,298,716

STYRENIC TETRAPOLYMER

Daniel L. Dufour, Longmeadow, Mass., assignor to Monsanto Company, St. Louis, Mo.

Filed Apr. 3, 1980, Ser. No. 137,078

Int. Cl.[3] C08F *22/06*

U.S. Cl. 526—65 **3 Claims**

1. A process for the production of a thermoformable composition which comprises sequentially:

A. forming a reaction mixture comprising styrene, α-methyl styrene, an ethylenically unsaturated nitrile and an ethylenically unsaturated dicarboxylic acid anhydride wherein the weight proportions of the components are such that:

(i) styrene + α-methyl styrene represents from 45–60%;

(ii) nitrile + anhydride represents from 40–55%;

(iii) α-methyl styrene represents from 10–50%; and

(iv) nitrile and anhydride each individually represent at least 10% of the monomers present in the reaction mixture;

B. initiating and continuing polymerization of the mixture in the absence of a dispersing medium till at least 40% conversion; and

C. substantially completing polymerization in aqueous suspension.

4,298,717

ETHYLENE POLYMERIZATION PROCESS

Jean-Pierre Machon, Bethune, France, assignor to Societe Chimique des Charbonnages-CdF Chimie, Paris la Defense, France

Filed Aug. 1, 1978, Ser. No. 929,952

Claims priority, application France, Aug. 1, 1977, 77 23652

Int. Cl.[3] C08F *2/02, 2/06, 10/02*

U.S. Cl. 526—124 **8 Claims**

1. A continuous process for polymerizing ethylene under a pressure of 600 to 2,000 bars and a temperature of 200° to 300° C., in at least one reactor comprising at least one reaction zone, by means of a catalytic system comprising (a) an activator selected from trialkylaluminums and alkylsiloxalanes, and (b) a compound comprising titanium trichloride, wherein a complexing agent (c) is injected into the reaction zone from a first supply source and said compound (b) is injected from a separate supply source whereby components (b) and (c) do not contact one another until substantially the time they are injected into the reaction zone but immediately contact one another at substantially the time of injection into the reaction zone and the concentration of complexing agent (c) in the reaction zone may be adjusted independently from the concentration of (b) in the same reaction zone, the ratio of the molar flow rate of (c) to the molar flow rate of titanium being between 0.15 and 4, said complexing agent being selected from silicone oils and from compounds having the formula $X(OR)_n$, wherein X is hydrogen or a metal, n is the valence of X, and R is an alkyl radical of up to 20 carbon atoms, the residence time of ethylene in the reaction zone being between 1 and 120 seconds.

4,298,718

CATALYSTS FOR THE POLYMERIZATION OF OLEFINS

Adolfo Mayr; Paolo Galli; Ermanno Susa; Giovanni Di Drusco, all of Ferrara, and Ettore Giachetti, Milan, all of Italy, assignors to Montecatini Edison S.p.A., Milan, Italy

Continuation of Ser. No. 324,596, Jan. 18, 1973, abandoned, which is a continuation of Ser. No. 878,954, Nov. 21, 1969, abandoned. This application Oct. 14, 1975, Ser. No. 622,550

Claims priority, application Italy, Nov. 25, 1968, 24141 A68

Int. Cl.[3] C08F *4/02, 10/02*

U.S. Cl. 526—125 **56 Claims**

1. A catalyst-forming component for use in preparing catalysts for the polymerization of olefins and which is the product obtained by contacting a titanium tetrahalide with an anhydrous magnesium dihalide in an active form characterized in that, in its X-rays powder spectrum, the diffraction line which is most intense in the spectrum of the normal, non-active magnesium dihalide is less intense and, in its place, a halo appears.

11. Polymerization catalysts prepared by mixing

(a) a supported catalyst-forming component the essential support material of which is an active magnesium dihalide, said component being obtained by cogrinding a titanium tetrahalide with a normal, non-active anhydrous magnesium dihalide to obtain a component (a) the magnesium dihalide support material of which is activated and characterized in that it has one or both of the following properties (1) its X-rays powder spectrum does not show the most intense diffraction lines as they appear in the X-rays powder spectrum of normal, non-active magnesium dihalide, the spectrum of the activated magnesium dihalide showing a broadening of said most intense diffraction lines; (2) the surface area of the activated magnesium dihalide is greater than 3 m^2/g; with

(b) a hydride or organometallic compound of a metal belonging to one of Groups I to III inclusive of the Mendelyeev Periodic Table.

4,298,719

DOUBLY ORIENTED FILM OF POLYVINYLIDENE FLUORIDE

Toshiya Mizuno; Mitsuru Ohta, and Masahiro Segawa, all of Iwaki, Japan, assignors to Kureha Kagaku Kogyo Kabushiki Kaisha, Tokyo, Japan

Filed Jul. 19, 1979, Ser. No. 58,776

Claims priority, application Japan, Jul. 27, 1978, 53-90965

Int. Cl.[3] B32B *27/00;* **B29C** *17/02;* **H01B** *3/44;* **C08F** *14/18*

U.S. Cl. 526—255 **5 Claims**

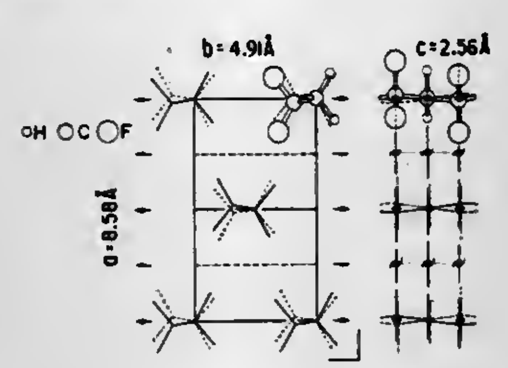

1. A biaxially stretched film of polyvinylidene fluoride having a crystal region which is predominantly occupied by doubly oriented form I crystals.

4,298,720

THERMOSETTING RESIN COMPOSITION FROM MALEIMIDE COMPOUND AND ALKENYL PHENOL

Noboru Yamazaki; Tsutomu Takase, both of Nagoya; Yoshio Morimoto, Tokai, and Teruo Yuasa, Nagoya, all of Japan, assignors to Mitsui Toatsu Chemicals Incorporated, Tokyo, Japan

Filed Jul. 23, 1979, Ser. No. 59,758

Int. Cl.[3] C08F *22/40*

U.S. Cl. 526—262 **7 Claims**

1. A thermosetting resin composition comprising:

(a) at least one maleimide compound selected from the group consisting (i) bismaleimides having the formula

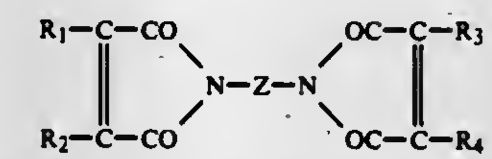

where R_1, R_2, R_3, and R_4 are the same or different from each other and are: hydrogen atoms; or halogen atoms; or straight-chain or branched alkyl radicals of from 1 to 10 carbon atoms; or phenyl radicals; or substituted phenyl radicals having one or more substituents selected from the straight-chain or branched alkyl radicals of from 1 to 10 carbon atoms, halogen atoms, $R_{13}O$—groups in which R_{13} is an aliphatic radical of from 1 to 5 carbon atoms, and, when there are two or more radicals represented by R_{13}, said radicals are identical to or different from each other,

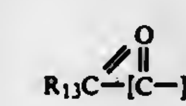

groups in which R_{13} is as previously defined, hydroxyl groups, or cyano groups; and Z is a divalent organic radical of at least 2 carbon atoms; and

(ii) polymaleimides having the formula

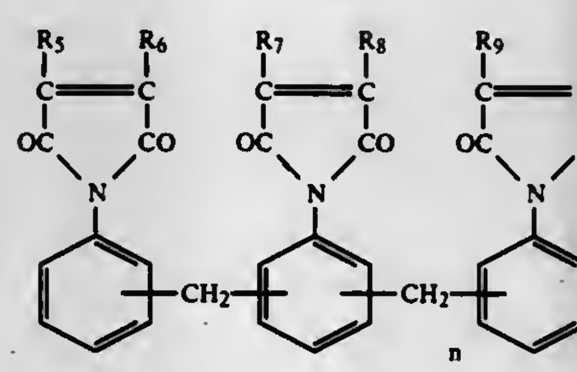

where R_5, R_6, R_7, R_8, R_9, and R_{10} are the same or different from each other and are hydrogen atoms; or halogen atoms; or straight-chain or branched alkyl radicals of from 1 to 10 carbon atoms; or phenyl radicals; or substituted phenyl radicals having one or more substituents selected from halogen atoms, straight-chain or branched alkyl radical of from 1 to 10 carbon atoms, $R_{13}O$—groups in which R_{13} is as previously defined,

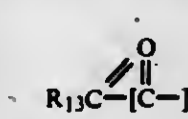

groups in which R_{13} is as previously defined, hydroxyl group, or cyano groups; and n is zero or a positive number; and

(b) at least one alkenylphenol derivative selected from the groups consisting of compounds having the formula

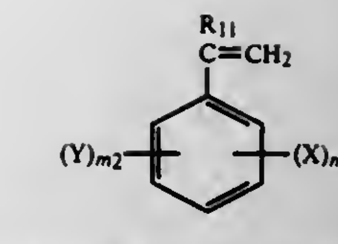

where R_{11} is a hydrogen atom; or halogen atom; or straight-chain or branched alkyl radical of from 1 to 10 carbon atoms; or phenyl radical; or substituted phenyl radical having one or more substituents selected from halogen atoms, straight-chain or branched alkyl radicals of from 1 to 10 carbon atoms, $R_{13}O$—groups in which R_{13} is as previously defined,

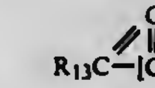

groups in which R_{13} is as previously defined, hydroxyl groups, or cyano groups; X is a hydrogen atom; or a halogen atom; or a carboxyl group; or an

group in which R_{13} is as previously defined; or a $R_{13}O$—group in which R_{13} is as previously defined; or a cyano group; Y is a hydroxyl group; or a $R_{13}O$—group in which R_{13} is as previously defined; or a glycidyloxy group; or an aryloxy group; or a substituted aryloxy group having one or more substituents selected from halogen atoms or straight-chain or branched alkyl radicals of from 1 to 5 carbon atoms; or a propargyloxy group; or a substituted propargyloxy group having one or more substituents selected from halogen atoms or straight-chain or branched alkyl radicals of from 1 to 5 carbon atoms; or an

group in which R_{14} is an aliphatic radical of from 1 to 20 carbon atoms; or an aromatic radical; and m_1 and m_2 are positive integers and the sum of $m_1 + m_2$ has the value of 5.

4,298,721

THERMOPLASTIC RUBBERS AND PROCESS FOR PREPARING SAME

Italo Borghi; Sergio Foschi, and Paolo Galli, all of Ferrara, Italy, assignors to Montedison S.p.A., Milan, Italy

Continuation of Ser. No. 807,520, Jun. 17, 1977, abandoned, which is a continuation of Ser. No. 550,136, Feb. 14, 1975, abandoned. This application Mar. 1, 1979, Ser. No. 16,558

Claims priority, application Italy, Feb. 15, 1974, 41005 A/74

Int. Cl.[3] C08F *10/06*

U.S. Cl. 526—348 **5 Claims**

1. Unvulcanized copolymers of propylene with ethylene containing from 50% to 75% by weight of polymerized propylene, said copolymers being obtained by polymerizing mixtures of ethylene and propylene to copolymers showing, on X-rays examination in the unoriented state, crystallinity of polypropylene and/or of polyethylene type, the crystallinity content ranging from 3 to 50% and the polyethylene-type crystallinity being less than 20%, said copolymers being further characterized in that the insoluble residue of the extraction of the total polymerizate with xylene at room temperature is from 40% to 75% by weight of the total polymerizate and in that in the infrared spectrum thereof the value of the R ratio between the absorption intensity of the band at 11.88 microns and that of

the absorption intensity at 12.16 microns is from 2 to 6, the R ratio being less than 4 when the polymerized propylene content of the polymers is lower than 70% by weight, said copolymers being still further characterized in that, after compression-molding thereof, they have a tensile strength at break of from 102 to 220 Kg/cm^2, determined according to ASTM D 412.

4,298,722
FRACTIONABLE, ELASTOMERIC POLY (1-BUTENE)
John W. Collette, Wilmington, Del., and Charles W. Tullock, Landenberg, Pa., assignors to E. I. Du Pont de Nemours and Company, Wilmington, Del.
PCT No. PCT/US80/00014, § 371 Date Mar. 11, 1980, § 102(e) Date Mar. 11, 1980
PCT Filed Jan. 10, 1980, Ser. No. 129,476
Int. Cl.³ C08F *10/08, 10/14*
U.S. Cl. 526—348.6 **8 Claims**

1. A fractionable, elastomeric, whole-polymer poly(1-butene) consisting essentially of
(i) 30% to 80%, by weight, of an ether-soluble fraction having an intrinsic viscosity exceeding 1.5 and an infrared crystallinity value of about 1% to 15%; and
(ii) 20% to 70%, by weight, of an ether-insoluble fraction having an infrared crystallinity value of about 20% to 55%;
said polymer further characterized by
(a) intrinsic viscosity exceeding 1.5,
(b) nmr isotacticity of 20% to 50%,
(c) tensile set not exceeding 150%, and
(d) tensile stress, M_{100}, above 10.

4,298,723
LAYERED OR AMORPHOUS ACYCLIC ORGANOMETALLIC INORGANIC POLYMERS
Peter M. DiGiacomo, Mission Viejo, and Martin B. Dines, Santa Ana, both of Calif., assignors to Occidental Research Corporation, Irvine, Calif.
Continuation-in-part of Ser. No. 945,971, Sep. 26, 1978, Pat. No. 4,232,146, and Ser. No. 60,079, Jul. 24, 1979. This application Sep. 25, 1979, Ser. No. 78,625
Int. Cl.³ C08G *79/00, 79/04*
U.S. Cl. 528—271 **28 Claims**

1. A solid polymeric compound having basic structural units of the formula:

$M(O_3ZO_xR)_n$

in which M is one or more tetravalent metals, Z is a pentavalent atom selected from the group consisting of phosphorus, arsenic, antimony, vanadium, niobium and tantalum, R is an organo group selected from acyclic and heteroacyclic groups, x is 0 or 1, and n is 2, provided that n is 1 when R is terminated with a tri- or tetra-oxy pentavalent atom.

4,298,724
BRANCHED POLYESTERS FOR ADHESIVES AND COATING COMPOSITIONS
Eugene G. Sommerfeld, Penn Valley, and Paul R. Noyes, Philadelphia, both of Pa., assignors to E. I. DuPont de Nemours and Company, Wilmington, Del.
Filed Feb. 20, 1980, Ser. No. 123,069
Int. Cl.³ C08G *63/18*
U.S. Cl. 528—302 **10 Claims**

1. A hydroxyl-containing polyester, soluble to the extent of at least 65% by weight in methyl ethyl ketone, formed from at least four different organic moieties:
(1) at least one diol moiety having 2–14 carbons;
(2) at least one triol or higher polyol moiety having 3–14 carbons;
(3) at least one dibasic aromatic acid moiety; and
(4) at least one dibasic aliphatic acid moiety,
the mole ratio X_1 of total polyol to total polyacid being in the range 1.25/1 to 1.8/1,
the mole ratio X_2 of diol to higher polyol being in the range of 0.8/1 to 1.5/1, and
the mole ratio X_3 of aromatic acid to total acid being in the range 0.3/1 to 0.8/1,
not all of X_1, X_2 and X_3 being at their extremes simultaneously.

4,298,725
PROCESS FOR THE PREPARATION OF POLYSACCHARIDE 9
Alan G. Williams, Ayr, Scotland; Christopher J. Lawson, Berkshire, England, and Julian W. T. Wimpenny, Gwent, Wales, assignors to Tate & Lyle Limited, England
Filed Feb. 1, 1978, Ser. No. 874,201
Int. Cl.³ C12P *19/04;* **A23G** *3/00*
U.S. Cl. 536—1 **15 Claims**

1. A process for the preparation of a polysaccharide which comprises cultivating Pseudomonas sp NCIB 11264 (ATCC 31260) to yield an exocellular polysaccharide.

15. A polysaccharide produced by Pseudomonas sp. NCIB 11264 characterized by an optical rotation $[\alpha]_{22}$ of $-15°$ C. (c 0.68_{H_2O}), an apparent viscosity of 4,600 cps measured at 25° C. for a one percent by weight solution, and a repeating unit which has one side chain terminated by a 4,6-O-(1-carboxyethylidene)-D-glucose and one 4,6 disubstituted glucose branch point, wherein the repeating unit comprises an acetate, a pyruvate, a 3-substituted-D-galactose, and 7 glucoses comprising a 6-substituted glucose, two 4-substituted glucoses, two 3-substituted glucoses and two 4,6-disubstituted glucoses, one of which is said branch point.

4,298,726
SYNTHESIS OF N-BENZOYL-L-RISTOSAMINE AND INTERMEDIATES USED IN ITS PREPARATION
Roy L. Whistler, West Lafayette, Ind., assignor to Purdue University, West Lafayette, Ind.
Filed Mar. 7, 1980, Ser. No. 128,298
Int. Cl.³ C07H *15/04*
U.S. Cl. 536—4 **19 Claims**

15. A compound having the formula

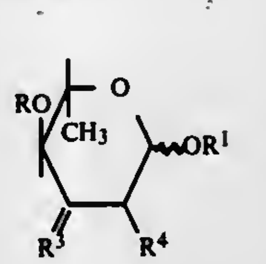

wherein
R is

$CH_3C(=O)—$ or $C_6H_5C(=O)—$,

R^1 is C_1–C_6 alkyl
R^3 is

$O=$, $HON=$, $CH_3C(=O)—ON=$, or $C_6H_5C(=O)—ON=$,

R^4 is HgCl or H provided that when R^4 is HgCl, R^3 must be $O=$ or $HON=$; when R^4 is H, R^3 cannot be $O=$.

4,298,727
3',4'-DIDEOXYKANAMYCIN A AND 1-N-(S)-α-HYDROXY-ω-AMINOALKANOYL) DERIVATIVES THEREOF
Hamao Umezawa; Sumio Umezawa, both of Tokyo; Tsutomo Tsuchiya, Yokohama; Tomo Jikahara, and Toshiaki Miyake, both of Kawasaki, all of Japan, assignors to Zaidan Hojin Biseibutsu Kagaku KenkyuKai, Tokyo, Japan
Filed Jan. 23, 1980, Ser. No. 114,779
Claims priority, application Japan, Feb. 5, 1979, 54-11402
Int. Cl.³ C07H *15/22*
U.S. Cl. 536—10 **6 Claims**

1. A compound which is 3',4'-dideoxykanamycin A of the formula

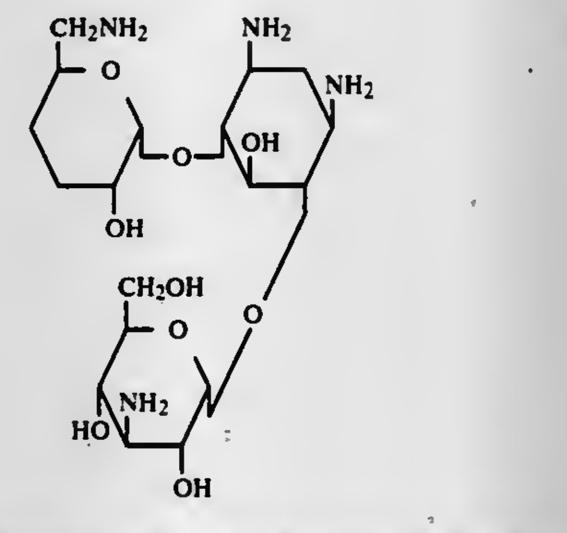

(Ia)

or a pharmaceutically acceptable acid-addition salt thereof.

4,298,728
METHOD OF PREPARING HYDROXYETHYL ETHERS OF CELLULOSE
Thomas G. Majewicz, Chadds Ford, Pa., and Walter S. Ropp, Hockessin, Del., assignors to Hercules Incorporated, Wilmington, Del.
Filed Jun. 3, 1980, Ser. No. 155,919
Int. Cl.³ C08G *59/00, 65/08*
U.S. Cl. 536—96 **10 Claims**

1. In the process for preparing hydroxyethyl cellulose wherein a cellulose furnish is reacted with an alkali metal hydroxide to prepare alkali cellulose and said alkali cellulose is slurried in a lower aliphatic alcohol and reacted with ethylene oxide, the improvement which comprises carrying out the alkali cellulose preparation in the presence of about 1 to 30%, based on the weight of cellulose of boric acid or a boric acid salt.

4,298,729
XANTHAN GUM-MODIFIED STARCHES
Hsiung Cheng, and Peter Wintersdorff, both of San Diego, Calif., assignors to Merck & Co., Inc., Rahway, N.J.
Filed May 25, 1979, Ser. No. 42,663
Int. Cl.³ A23L *1/195, 1/189;* **C08L** *3/04*
U.S. Cl. 536—102 **1 Claim**

1. A process for preparing xanthan gum-modified starch comprising
a. preparing an aqueous mixture of xanthan gum and precursor starch, where the xanthan gum to precursor starch ratio ranges from 1:100 to 1:1,
b. heating said mixture below 100° C. to effect gelatinization of the precursor starch where the heating is continued until the moisture content of the mixture is below 10%, and then
c. drying said heated mixture between 138°-176° C. for at least fifteen seconds in an oven or extruder.

4,298,730
PROCESS FOR THE PRODUCTION OF A SURFACTANT CONTAINING SUCROSE ESTERS
Harry R. Galleymore, Bath; Kenneth James, Reading; Haydn F. Jones, Reading; Chaman L. Bhardwaj, Reading, all of England; James S. Plant, deceased, late of Reading, England, and by Aline P. Plant, administrator, Manchester, England, assignors to Talres Development (N.A.) N.V., Curacao, Netherlands Antilles
Filed Jul. 31, 1980, Ser. No. 174,277
Claims priority, application United Kingdom, Dec. 19, 1979, 43762/79; May 1, 1980, 14370/80
Int. Cl.³ C07H *13/06;* **C11D** *1/66, 9/26, 11/04*
U.S. Cl. 536—119 **20 Claims**

1. In the process for the preparation of a surfactant mixture containing sucrose mono- and di-esters, by reacting a starting mixture including solid particulate sucrose, at least one triglyceride of a fatty acid having at least 8 carbon atoms and a basic transesterification catalyst, at a temperature of from 110° to 140° C. at atmospheric pressure and in the absence of any solvent, the improvement which comprises that the starting mixture:
(a) contains a di- and/or mono-glyceride in an amount to provide a hydroxyl value of greater than 500 mg KOH/100 g of starting mixture;
(b) contains at least 10% by weight of a fatty acid soap in addition to the basic transesterification catalyst, at least 50% by weight of the soap being potassium soap, and
(c) (when the soap content is less than 20% by weight) contains at least 25% by weight of sucrose.

4,298,731
BENZOTHIADIAZINE COMPOUNDS
Gerhard Hamprecht, Mannheim; Gerd Stubenrauch, Ludwigshafen; Hans Urbach, Lampertheim, and Bruno Wuerzer, Limburgerhof, all of Fed. Rep. of Germany, assignors to BASF Aktiengesellschaft, Fed. Rep. of Germany
Filed Nov. 16, 1977, Ser. No. 851,826
Claims priority, application Fed. Rep. of Germany, Dec. 11, 1976, 2656290
Int. Cl.³ C07D *285/16*
U.S. Cl. 544—11 **8 Claims**

1. A compound of the formula

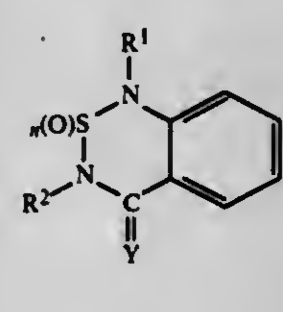

where R^1 is lower alkynyl; lower haloalkenyl; lower haloalkynyl; lower alkoxycarboalkyl; lower alkoxycarboalkenyl; lower alkanoylalkyl; lower azidoalkyl; lower thiocyanatoalkyl; lower cyanoalkyl; carbamyl-lower alkyl; carbamyl-lower alkyl substituted by halogen; halo- or methyl substituted phenyl; lower alkylmercaptoalkyl, lower phenylmercaptoalkyl, wherein in said alkylmercaptoalkyl and phenylmercaptoalkyl the final alkyl has more than 1 carbon atom; or methyl substituted by lower O-alkyl-N-alkylaminophosphorothio, lower O,O-dialkylphosphoro, lower O,O,O-trialkylphosphinylimino, lower alkoxy thiocarbonyl thio, lower alkylsulfinyl, thiocarbamido, isothiuronium hydrochloride,

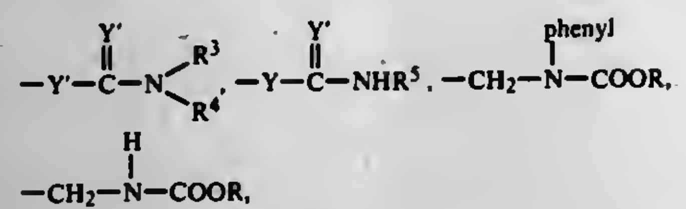

lower alkanoylamido, lower alkanoylamido substituted by halogen, phthalylimidoalkyl, isoxazole or isoxazole substituted by methyl or halogen;
R^2 is isopropyl;
n is 2;
R and R^3 are lower alkyl,
R^4 is lower alkyl or hydrogen,
R^5 is lower alkyl or phenyl; and
each Y and Y' independently is oxygen or sulfur.

4,298,732
CRYSTALLIZATION PROCESS
Harry C. Stables, Ulverston, England, assignor to Glaxo Group Limited, England
Continuation of Ser. No. 4,071, Jan. 17, 1978, abandoned. This application Mar. 3, 1980, Ser. No. 126,523
Claims priority, application United Kingdom, Jan. 17, 1978, 1881/78
Int. Cl.^{3} C07D *501/12*
U.S. Cl. 544—20 **11 Claims**

1. In a process for the preparation of crystalline sodium cefuroxime wherein the improvement comprises the steps of adding an aqueous solution containing from 5 to 20% w/v of sodium cefuroxime and an aqueous solution containing sodium ions derived from a non-toxic, water-soluble sodium salt of an organic carboxylic acid other than those derived from sodium cefuroxime, and having a concentration of from 20 to 70% w/v; to an aqueous crystallising medium containing a seeding amount of solid sodium cefuroxime and recovering crystalline sodium cefuroxime from the crystallising medium, the crystallising medium being at a temperature of from 20° to 60° C. and the aqueous solution of sodium cefuroxime and the aqueous solution containing sodium ions being added substantially simultaneously and at substantially the same volume rate, whereby sodium cefuroxime continuously crystallises out of the crystallising medium as the two solutions are added.

4,298,733
PREPARATION OF CIS-2,6-DIMETHYLMORPHOLINE
Norbert Goetz, Worms; Walter Himmele, Walldorf, and Leopold Hupfer, Friedelsheim, all of Fed. Rep. of Germany, assignors to BASF Aktiengesellschaft, Fed. Rep. of Germany
Filed Sep. 8, 1980, Ser. No. 184,816
Claims priority, application Fed. Rep. of Germany, Sep. 25, 1979, 2938698
Int. Cl.^{3} C07D *265/30*
U.S. Cl. 544—106 **2 Claims**

1. A process for the preparation of cis-2,6-dimethylmorpholine by isomerizing trans-2,6-dimethylmorpholine, wherein trans-2,6-dimethylmorpholine is converted, in the presence of hydrogen and of a catalyst containing palladium as well as zinc, cadmium or manganese or a mixture of these, at from 120° to 280° C., especially from 150° to 250° C. under a pressure of from 1 to 200 bar.

4,298,734
DIAZAHETEROCYCLOPURINES AND TRIAZOLOPYRIMIDINES
Davis L. Temple, Jr., Evansville, Ind., assignor to Mead Johnson & Company, Evansville, Ind.
Continuation-in-part of Ser. No. 869,203, Jan. 13, 1978, abandoned, which is a continuation-in-part of Ser. No. 768,291, Feb. 14, 1977, abandoned. This application Mar. 5, 1979, Ser. No. 17,771
Int. Cl.^{3} C07D *487/12, 487/14*
U.S. Cl. 544—251 **32 Claims**

1. A compound selected from the group consisting of

Formula XX

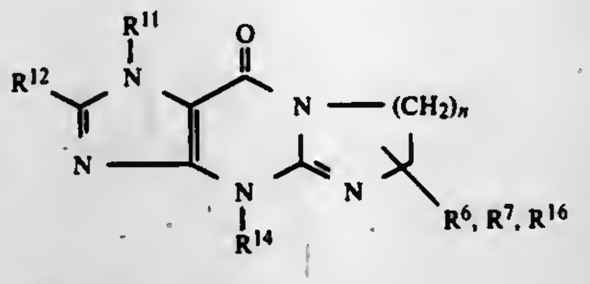

wherein
Q is O, S, or NR^{10},
R^{10} is selected from the group consisting of hydrogen, lower alkyl having up to 8 carbon atoms, lower alkenyl or lower alkynyl each having 3 to 8 carbon atoms, dialkylaminoalkyl having 4 to 12 carbon atoms, cycloalkyl having 3 to 6 carbon atoms, cycloalkylalkyl having 4 to 12 carbon atoms, pyridylmethyl, aralkyl or substituted aralkyl each having 7 to 12 carbon atoms, aryloxyalkyl or substituted aryloxyalkyl each having 8 to 12 carbon atoms wherein each of said substituted aralkyl and substituted aryloxyalkyl groups contains 1 or 2 substituents selected from halogen, alkoxy, and alkyl, and each of said alkoxy and alkyl groups contains up to 6 carbon atoms,
R^{11} is alkoxycarbonyl having 2 to 4 carbon atoms, aminoalkyl having 2 to 8 carbon atoms, or is independently selected from the foregoing group defined for R^{10},
R^{12} is lower alkyl, lower alkenyl, lower alkynyl, lower alkylthio, lower alkylsulfinyl, or lower alkylsulfonyl each having up to 8 carbon atoms, hydrogen, thioxo, trifluoromethyl or halogen when R^{11} is hydrogen,
R^{12} is lower alkylamino, di-lower alkylamino, lower alkoxyimino, lower alkyl, lower alkenyl, lower alkynyl, lower alkylthio, lower alkylsulfinyl, lower alkylsulfonyl, or lower alkoxy each having up to 8 carbon atoms, hydrogen, thioxo, trifluoromethyl, halogen, hydrazino, azido, cyano, hydroxy, or amino when R^{11} is other than hydrogen,
R^{14} is selected from the group consisting of lower alkyl having up to 8 carbon atoms, lower alkenyl or lower alkynyl having 3 to 8 atoms, cycloalkyl having 3 to 6 carbon atoms, cycloalkylalkyl having 4 to 12 carbon atoms, pyridylmethyl, lower alkanoyl or lower alkenoyl or lower alkynoyl each having up to 8 carbon atoms, aroyl or substituted aroyl having 7 to 12 carbon atoms, aralkyl or substituted aralkyl having 7 to 12 carbon atoms, aryloxyalkyl or substituted aryloxyalkyl having 8 to 12 carbon atoms wherein each of said substituted aroyl, substituted aralkyl, and substituted aryloxyalkyl groups contains 1 or 2 ring substituents selected from halogen, alkoxy, and alkyl, and each of said alkoxy and alkyl groups contains up to 6 carbon atoms,
R^6 and R^7 are attached to ring carbon atoms and are selected from hydrogen, methyl, and ethyl,
R^{16} represents hydrogen or a double bond between adjacent ring carbon atoms,
n is the integer 1, 2 or 3,
the pharmaceutically acceptable acid addition and quaternary ammonium salts of the foregoing compounds, and the pharmaceutically acceptable metal, ammonium, and amine salts of the foregoing compounds wherein R^{11} is hydrogen.

4,298,735
FOLIC ACID DERIVATIVES
Peter R. Farina, North Salem, and James A. Grattan, Croton-on-Hudson, both of N.Y., assignors to Union Carbide Corporation, New York, N.Y.
Filed Apr. 30, 1979, Ser. No. 34,760
Int. Cl.^{3} C07D *475/04*
U.S. Cl. 544—257 **16 Claims**

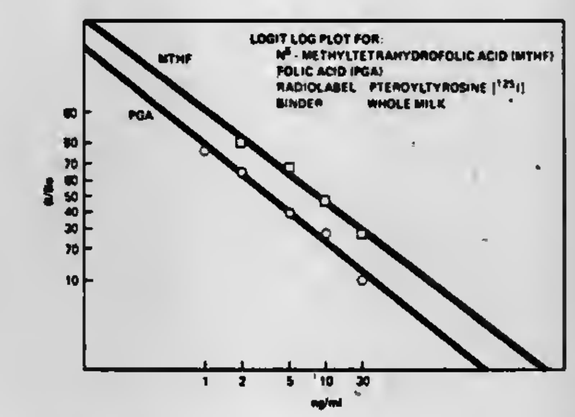

1. A radioiodinated composition having the formula:

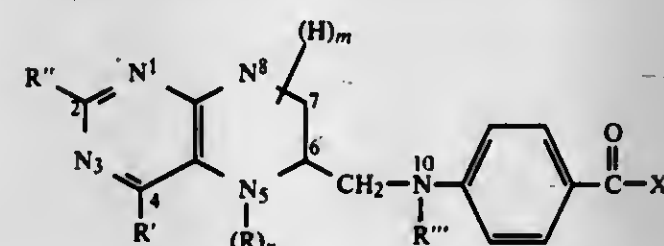

wherein R represents hydrogen, lower alkyl, formyl or iminomethyl R' and R'' individually represent lower alkyl, hydroxyl, halo, amino or acetamido, R''' represents R or nitroso; X is a radioiodinated amino acid or radioiodinated des-carboxy amino acid moiety selected from the group consisting of:

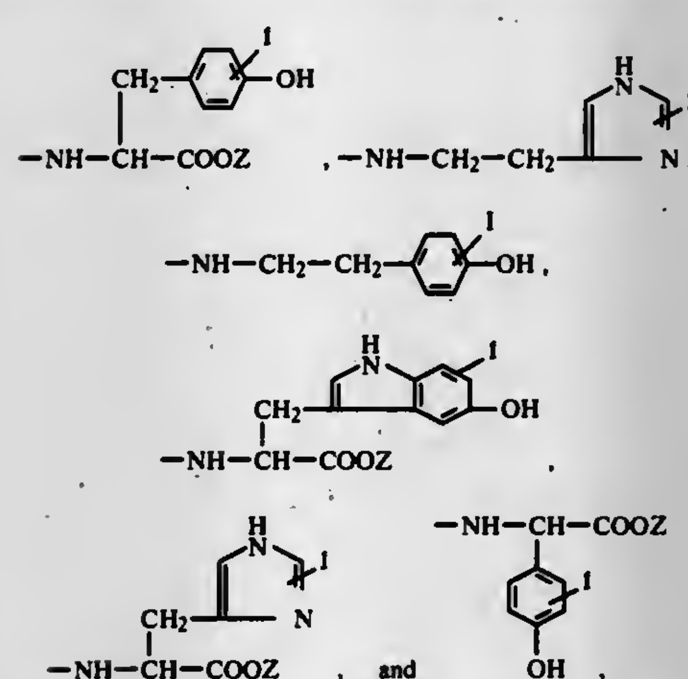

wherein Z is hydrogen or lower alkyl; m has a value of 1, 3 or 4 and n has a value of zero or 1.

4,298,736
CARBON-CAFFEINE SEPARATION
Saul N. Katz, Monsey, and George E. Proscia, West Sayville, both of N.Y., assignors to General Foods Corporation, White Plains, N.Y.
Filed Jun. 16, 1980, Ser. No. 159,724
Int. Cl.^{3} C07D *473/12*
U.S. Cl. 544—274 **12 Claims**

1. A process for recovering caffeine from activated carbon comprising:
contacting activated carbon having caffeine adsorbed thereon with a liquid, food-grade caffeine solvent which comprises an organic acid or an alcohol, and which is capable of displacing at least a portion of the caffeine from active sites on the carbon;
maintaining the contact for a period of time and at a temperature effective for the solvent to displace at least a portion of the caffeine from the carbon and dissolve the displaced caffeine; and
separating caffeine from the solvent.

4,298,737
PIPERDINYL SUBSTITUTED 1,4-DIAZA-2-CYCLOALKANONES AND DERIVATIVES THEREOF
John T. Lai, Broadview Heights, and Pyong-Nae Son, Akron, both of Ohio, assignors to The B. F. Goodrich Company, Akron, Ohio
Division of Ser. No. 972,834, Dec. 26, 1978, abandoned. This application Oct. 22, 1979, Ser. No. 87,264
Int. Cl.^{3} C07D *241/04*
U.S. Cl. 544—360 **6 Claims**

1. Compounds of the formula:

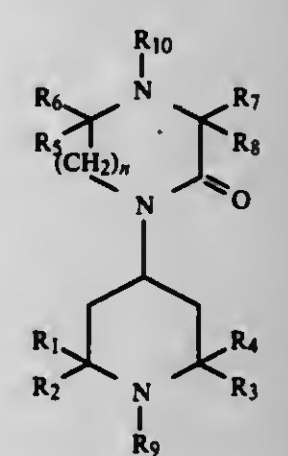

wherein R_1 through R_4 can be hydrogen or alkyl of 1 to 10 carbon atoms;
R_5 and R_6 are independently selected from the group consisting of alkyl of 1 to 12 carbon atoms, cycloalkyl, hydroxycycloalkyl, aminoalkyl, iminoalkyl, alkenyl, aralkyl and alkylene, provided further that any two of said substituents pendant from the same carbon atom can collectively form a cyclic or alicyclic hydrocarbon;
R_7 and R_8 are selected from the same group of substituents as R_5 and R_6 above;
R_9 and R_{10} is oxygen, hydrogen or alkyl of 1 to 12 carbon atoms; and
n is 1 to 3.

4,298,738

ACYLPHOSPHINE OXIDE COMPOUNDS THEIR PREPARATION AND USE

Peter Lechtken, Frankenthal; Ingolf Buethe, Ludwigshafen; Manfred Jacobi, Frankenthal, and Werner Trimborn, Limburgerhof, all of Fed. Rep. of Germany, assignors to BASF Aktiengesellschaft, Fed. Rep. of Germany

Continuation of Ser. No. 55,399, Jul. 6, 1979, abandoned. This application May 12, 1980, Ser. No. 148,665

Claims priority, application Fed. Rep. of Germany, Mar. 14, 1979, 2909994

Int. Cl.^{3} C07F *9/53*

U.S. Cl. 546—22 **5 Claims**

1. An acylphosphine oxide compound of the formula

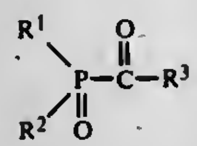

(I)

where

R^1 is straight-chain or branched alkyl of 1 to 6 carbon atoms cyclohexyl, cyclopentyl, phenyl or naphthyl which is unsubstituted or substituted by halogen, alkyl of 1 to 6 carbon atoms or alkoxy of 1 to 6 carbon atoms, or a fully aromatic S-containing or N-containing five-membered or six-membered heterocyclic radical having one hetero atom, selected from pyridyl or thienyl,

R^3 is an at least disubstituted phenyl, pyridyl, furyl or thienyl radical which carries, at least at the two carbon atoms adjacent to the linkage point of the carbonyl group, the substituents A and B, which may be identical or different, and each of which is alkyl, alkoxy or alkylthio of 1 to 6 carbon atoms, cycloalkyl of 5 to 7 carbon atoms, phenyl or halogen, or R^3 is α-naphthyl substituted by A and B at least in the 2- and 8-positions or is β-naphthyl substituted by A and B at least in the 1- and 3-positions and

R^2 has one of the meanings of R^1 (but R^1 and R^2 may be identical or different with the proviso that R^1 and R^2 do not stand simultaneously for alkyl of 1 to 5 carbon atoms or alkoxy of 1 to 5 carbon atoms if R^3 is phenyl which carries the substituents A and B, in the same positions as defined above, but in which the meanings of A and B are restricted to alkoxy of 1 to 5 carbon atoms or halogen) or is alkoxy of 1 to 6 carbon atoms, phenoxy, methylphenoxy or benzyloxy, or R^1 and R^2 may be joined together to form a five- or six-membered P-containing ring.

4,298,739

NOVEL CARBOSTYRIL DERIVATIVES

Takao Nishi; Hiraki Ueda, and Kazuyuki Nakagawa, all of Tokushima, Japan, assignors to Otsuka Pharmaceutical Co., Ltd., Tokyo, Japan

Continuation of Ser. No. 914,589, Jun. 9, 1978, abandoned. This application Apr. 21, 1980, Ser. No. 142,057

Claims priority, application Japan, Jun. 10, 1977, 52/69319; Jun. 24, 1977, 52/75863; Feb. 28, 1978, 53/23012

Int. Cl.^{3} C07D *215/22;* A61K *31/47*

U.S. Cl. 546—158 **35 Claims**

1. A compound of the formula,

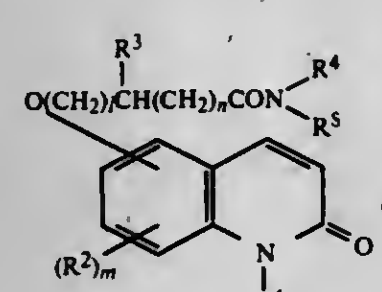

(1)

or

-continued

(2)

wherein R^1 is hydrogen, C_{1-4} alkyl, C_{2-4} alkenyl or phenyl C_{1-4} alkyl; R^2 is hydrogen, halogen, hydroxy or phenyl C_{1-4} alkoxy; R^3 is hydrogen, hydroxy or C_{1-4} alkyl; R^4 is phenyl, C_{3-8} cycloalkyl, C_{3-8} cycloalkyl C_{1-4} alkyl or 2-(3,4-dimethoxyphenyl)ethyl or phenyl or C_{3-8} cycloalkyl substituted by no more than two groups selected from C_{1-4} alkyl, C_{1-4} alkoxy, halogen, C_{1-4} alkanoylamino, C_{1-4} alkanoyloxy, C_{1-4} alkoxycarbonyl, C_{1-4} alkanoyl, C_{1-4} alkylcarbamoyl, C_{1-4} alkylamine, nitro, carboxy, hydroxyl, amminosulfonyl, carbamoyl, and amino; R^5 is hydrogen, C_{1-8} alkyl, C_{2-4} alkenyl, phenyl, C_{3-8} cycloalkyl, phenyl C_{1-4} alkyl or C_{3-8} cycloalkyl C_{1-4} alkyl or sustituted phenyl C_{1-4} alkyl substituted in the phenyl group by no more than two C_{1-4} alkoxy groups; m is an integer of 1 to 3; and l and n, which can be the same or different, are 0 or an integer of 1 to 7 such that the sum of l and n does not exceed 7.

4,298,740

PROCESS FOR THE PRODUCTION OF THIOLCARBAMATE COMPOUNDS

Kazuhiko Konno; Atsushi Goh, and Kiyoshi Sugaya, all of Ami, Japan, assignors to Mitsubishi Petrochemical Co., Ltd., Japan

Filed Apr. 3, 1980, Ser. No. 137,005

Claims priority, application Japan, Apr. 10, 1979, 54-42576

Int. Cl.^{3} C07D *211/06, 207/24, 209/32;* C07C *155/02*

U.S. Cl. 546—226 **7 Claims**

1. A process for the production of a thiolcarbamate compound of the formula

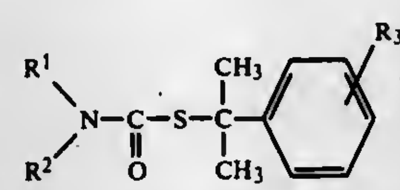

(I)

wherein R^1 and R^2, which may be the same or different, each represent a member selected from the group consisting of hydrogen, alkyl groups and alkenyl groups, and R^3 represents a member selected from the group consisting of hydrogen, halogen, nitro, alkyl groups and alkoxy groups, in which R^1 and R^2 taken together with N in the formula may form a hetero ring of the formula

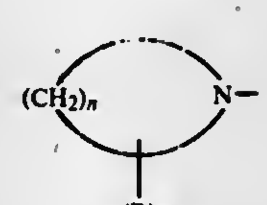

where R is hydrogen or an alkyl group of 1 to 4 carbon atoms, m is an integer from 1 to 2, and n is an integer from 2 to 6, said process comprising reacting a tertiary halogen compound of the formula

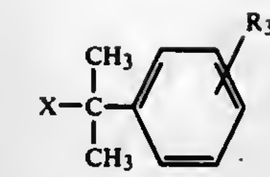

(II)

wherein X represents halogen, and R^3 is as defined above, with a thiolcarbamic acid salt of the formula

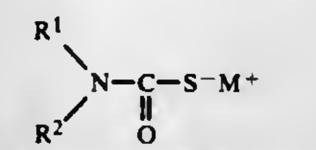

(III)

wherein M represents a member selected from the group consisting of the alkali metals, ammonium group and immonium group, in an aqueous reaction medium, in the presence of a strong base; wherein the reaction is carried out under conditions in which the reaction system is adjusted to a pH ranging from about 9 to about 13.

4,298,741

6-AMIDO-3-SUBSTITUTED-1-AZABICYCLO[3.2.0]-HEPT-2-EN-7-ONE-2-CARBOXYLIC ACID

Burton G. Christensen, Metuchen; Ravindra N. Guthikonda, Perth Amboy, and Ronald W. Ratcliffe, Matawan, all of N.J., assignors to Merck & Co., Inc., Rahway, N.J.

Continuation of Ser. No. 927,319, Jul. 24, 1978, abandoned. This application Jul. 11, 1980, Ser. No. 168,947

Int. Cl.^{3} C07D *487/04, 205/08;* **A61K** *31/40;* **C07D** *409/12*

U.S. Cl. 546—272 **2 Claims**

1. The compound of the formula:

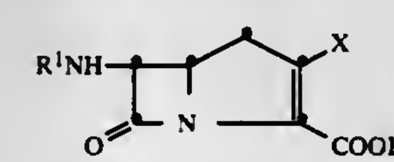

or pharmaceutically acceptable salts thereof; wherein X is chloro, acetyl, methoxy,

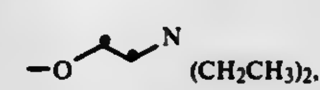

or oxo, with the proviso that when X is oxo, 2–3 bond is saturated; and R^1 is

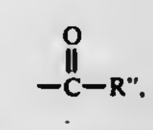

wherein R'' is benzyl, p-hydroxybenzyl, 4-amino-4-carboxybutyl, methyl, cyanomethyl, 2-pentenyl, n-amyl, n-heptyl, ethyl, 3- or 4-nitrobenzyl, phenethyl, β,β-diphenylethyl, methyldiphenylmethyl, triphenylmethyl, 2-methoxyphenyl, 2,6-dimethoxyphenyl, 2,4,6-trimethoxyphenyl, 3,5-dimethyl-4-isoxazolyl, 3-butyl-5-methyl-4-isoxazolyl, 5-methyl-3-phenyl-4-isoxazolyl, 3-(2-chlorophenyl)-5-methyl-4-isoxazolyl, 3-(2,6-dichlorophenyl)5-methyl-4-isoxazolyl, D-4-amino-4-carboxybutyl, D-4-N-benzoylamino-4-carboxy-n-butyl, p-aminobenzyl, o-aminobenzyl, m-aminobenzyl, p-dimethylaminobenzyl, (3-pyridyl)methyl, 2-ethoxy-1-naphthyl, 3-carboxy-2-quinoxalinyl, 3-(2,6-dichlorophenyl)-5-(2-furyl)-4-isoxazolyl, 3-phenyl-4-isoxazolyl, 5-methyl-3-(4-guanidinophenyl)-4-isoxazolyl, 4-guanidinomethylphenyl, 4-guanidinomethylbenzyl, 4-guanidinobenzyl, 4-guanidinophenyl, 2,6-dimethoxy-4-guanidino, o-sulfobenzyl, p-carboxymethylbenzyl, p-carbamoylmethylbenzyl, m-fluorobenzyl, m-bromobenzyl, p-chlorobenzyl, p-methoxybenzyl, 1-naphthylmethyl, 3-isothiazolylmethyl, 4-isothiazolylmethyl, 5-isothiazolylmethyl, guanylthiomethyl, 4-pyridylmethyl, 5-isoxazolylmethyl, 4-methoxy-5-isoxazolylmethyl, 4-methyl-5-isoxazolylmethyl, 1-imidazolylmethyl, 2-benzofuranylmethyl, 2-indolylmethyl, 2-phenylvinyl, 2-phenylethynyl, 1-aminocyclohexyl, 2- and 3-thienylaminomethyl, 2-(5-nitrofuranyl)vinyl, phenyl, o-methoxyphenyl, o-chlorophenyl, 1-phenylphenyl, p-aminomethylbenzyl, 1-(5-cyanotriazolyl)methyl, difluoromethyl, dichloromethyl, dibromomethyl, 1-(3-methylimidazolyl)methyl, 2- or 3-(5-carboxymethylthienyl)methyl, 2- or 3-(4-carbamoylthienyl)methyl, 2- or 3-(5-methylthienyl)methyl, 2- or 3-(methoxythienyl)methyl, 2- or 3-(4-chlorothienyl)methyl, 2- or 3-(5-sulfothienyl)methyl, 2- or 3-(5-carboxythienyl)methyl, 3-(1,2,5-thiadiazolyl)methyl, 3-(4-methoxy-1,2,5-thiadiazolyl)methyl, 2-furylmethyl, 2-(5-nitrofuryl)methyl, 3-furylmethyl, 2-thienylmethyl, 3-thienylmethyl, tetrazolylmethyl benzamidinomethyl and cyclohexylamidinomethyl.

4,298,742

ESTERS OF BENZOXA(THIA)ZOLE-2-CARBOXYLIC ACIDS

Richard E. Brown, East Hanover, N.J.; Vasil St. Georgiev, New Rochelle, and Bernard Loev, Scarsdale, both of N.Y., assignors to USV Pharmaceutical Corporation, Tuckahoe, N.Y.

Filed May 12, 1980, Ser. No. 149,079

Int. Cl.^{3} A61K *31/42, 31/425;* **C07D** *263/34, 277/68*

U.S. Cl. 548—152 **14 Claims**

1. An antiallergic compound of the formula:

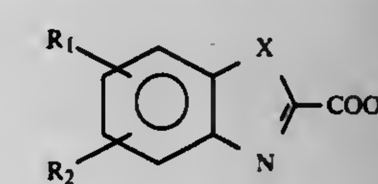

wherein,

X is S or O,

R_1 and R_2 are each hydrogen, R_3, OR_4, halogen, cyano, $COOR_4$, methanesulfonyl, nitro, trifluoromethyl, or taken together methylenedioxy, wherein R_3 is lower alkyl or cycloalkyl of 3 to 7 carbon atoms, and R_4 is hydrogen or lower alkyl; and

R is

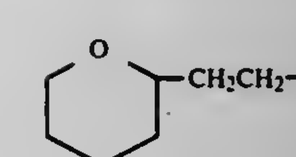

or —Z—OR_3

wherein Z is a branched or unbranched alkylene chain containing from 2 to 6 carbon atoms in the principal chain and a total of up to about 12 carbon atoms, and R_3 is as defined above, and acid addition salts thereof.

4,298,743

4-(SUBSTITUTED PHENYL THIAZOLYL)-3-HYDROXY-3-PYRROLINE-2,5-DIONES

Edward J. Cragoe, Jr., Lansdale; Clarence S. Rooney, Worcester, both of Pa., and Haydn W. R. Williams, Dollard des Ormeaux, Canada, assignors to Merck & Co., Inc., Rahway, N.J.

Filed Sep. 11, 1979, Ser. No. 74,465

Int. Cl.^{3} C07D *417/04;* **A61K** *31/425*

U.S. Cl. 548—203 **10 Claims**

1. Compounds having the structure

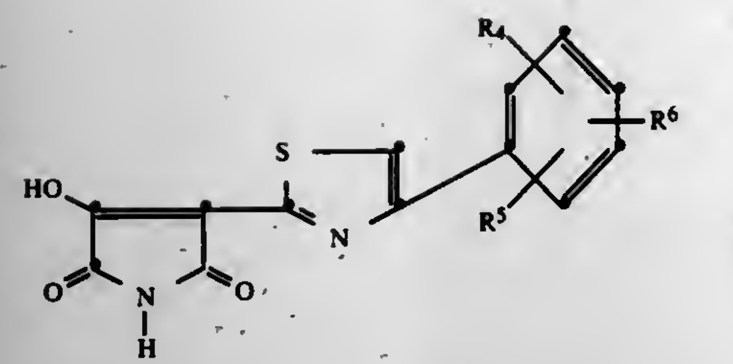

wherein

R_4, R_5 and R_6 are independently hydrogen, halogen, straight chained loweralkyl having 1 to 3 carbon atoms, loweralkoxy having 1 to 3 carbon atoms and the pharmaceutically acceptable salts thereof.

2. Compounds having the strucure:

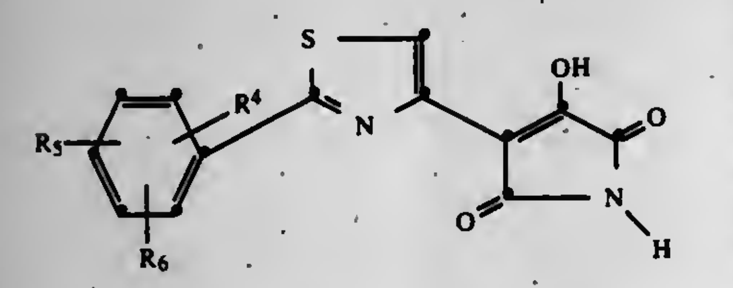

wherein

R_4, R_5 and R_6 are independently hydrogen, halogen, straight chained loweralkyl having 1 to 3 carbon atoms, loweralkoxy having 1 to 3 carbon atoms and pharmaceutically acceptable salts thereof.

4,298,744

METHOD FOR PREPARING (αS,5S)-α-AMINO-3-CHLORO-2-ISOXAZOLINE-5-ACETIC ACID (AT-125) AND ANALOGS THEREOF

Robert C. Kelly, and Wendell Wierenga, both of Kalamazoo, Mich., assignors to The Upjohn Company, Kalamazoo, Mich.

Continuation-in-part of Ser. No. 20,141, Mar. 13, 1979, abandoned, which is a division of Ser. No. 905,963, May 15, 1978, abandoned. This application Jul. 13, 1979, Ser. No. 57,310

Int. Cl.³ C07D *209/48, 261/04*

U.S. Cl. 548—240 **12 Claims**

1. A process for preparing racemic mixtures and optically active isomers of a compound having the formula

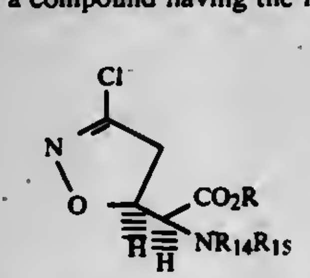

which comprises chlorinating a compound having the formula

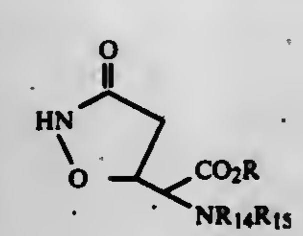

wherein R is selected from the group consisting of hydrogen, alkyl of from 1 to 8 carbon atoms, inclusive, halogenated alkyl of from 1 to 3 halogen atoms, and 1 to 5 carbon atoms, inclusive and aralkyl of from 7 to 20 carbon atoms, inclusive and substituted aralkyl of from 7 to 20 carbon atoms, inclusive; and R_{14} and R_{15} are selected from the group consisting of hydrogen,

$$-\overset{O}{\overset{\|}{C}}OR_6 \quad -\overset{O}{\overset{\|}{C}}-R_7,$$

inclusive, or when taken together with the nitrogen atom form the group

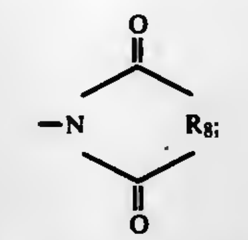

wherein R_6 is alkyl of from 1 to 8 carbon atoms, inclusive, halogenated alkyl of from 1 to 5 carbon atoms, inclusive, and 1 to 3 halogen atoms, inclusive, aralkyl of from 7 to 20 carbon atoms, inclusive, and substituted aralkyl of from 7 to 20 carbon atoms, inclusive, R_7 is selected from the group consisting of alkyl of from 1 to 12 carbon atoms, inclusive, aryl of from 6 to 20 carbon atoms, inclusive, aryl of from 6 to 20 carbon atoms, inclusive, aralkyl of from 7 to 20 carbon atoms, inclusive, substituted aralkyl of from 7 to 20 carbon atoms, inclusive, and R_8 is selected from the group consisting of

$$-\underset{R_{10}}{\overset{R_9}{C}}-\underset{R_{12}}{\overset{R_{11}}{C}}-$$

where R_9, R_{10}, R_{11} and R_{12} are selected from the group consisting of hydrogen and alkyl of from 1 to 5 carbon atoms, inclusive, (b)

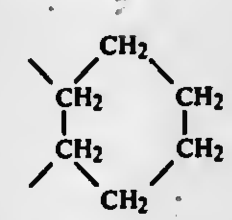

(c) orthointerphenylene, and (d) substituted orthointerphenylene.

4,298,745

HYDANTOIN DERIVATIVES

Gordon Wootton, Herts, and Richard W. Moore, Harlow, both of England, assignors to Beecham Gronp Limited, England

Continuation of Ser. No. 4,897, Jan. 19, 1979, abandoned. This application Nov. 19, 1979, Ser. No. 95,339

Claims priority, application United Kingdom, Jan. 23, 1978, 02694/78; May 12, 1978, 19232/78

Int. Cl.³ C07D *233/54*

U.S. Cl. 548—313 **15 Claims**

1. A compound of the formula:

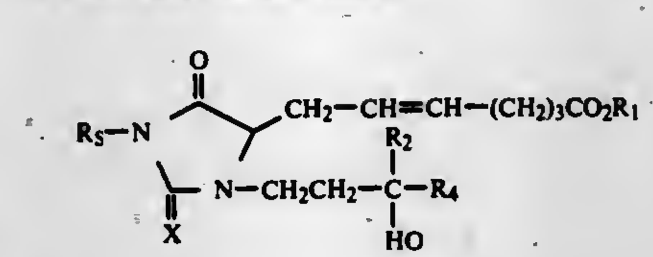

wherein

X is O or S;

R_1 is hydrogen, or CO_2R_1 represents an ester group in which R_1 contains from 1 to 12 carbon atoms;

R_2 is hydrogen or alkyl of 1 to 4 carbon atoms;

R_4 is alkyl of 1 to 9 carbon atoms; and

R_5 is alkyl of 1 to 6 carbon atoms; and the alkali metal, alkaline earth metal, ammonium and substituted ammonium salts thereof when R_1 is hydrogen.

4,298,746

N-(SUBSTITUTED PHENYL)-N'-(2-IMIDAZOLIDINYLIDENE)UREAS

Chris R. Rasmussen, Ambler, Pa., assignor to McNeilab, Inc., Fort Washington, Pa.

Continuation-in-part of Ser. No. 972,579, Dec. 22, 1978, Pat. No. 4,229,462. This application Jun. 6, 1980, Ser. No. 156,900

Int. Cl.³ C07D *233/44*

U.S. Cl. 548—315 **7 Claims**

2. An N-(Substituted phenyl)-N'-(2-imidazolidinylidene)urea compound of the formula:

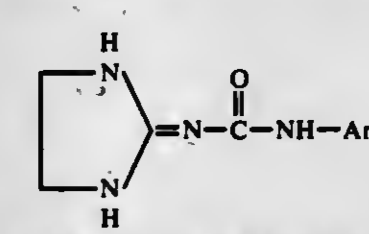

or a pharmaceutically-acceptable acid addition salt thereof, wherein Ar is phenyl substituted with one or two substituents independently selected from methyl, chloro, bromo or methoxy.

4,298,747

BIS(DIHYDROXYMETHYLOXOIMIDAZOLIDINYL)ALKANES

John G. Frick, Jr., New Orleans, and Robert J. Harper, Jr., Metairie, both of La., assignors to The United States of America as represented by the Secretary of Agriculture, Washington, D.C.

Filed Aug. 25, 1980, Ser. No. 180,544

Int. Cl.³ C07D *233/40*

U.S. Cl. 548—318 **3 Claims**

1. A bis substituted alkane compound having the following structure:

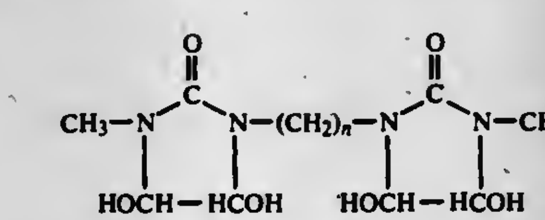

wherein n is 2 or 3.

4,298,748

PREPARATION OF 2-IMIDAZOLINES

Toni Dockner, Meckenheim; Uwe Kempe, Limburgerhof; Herbert Krug, Ludwigshafen; Peter Magnussen, Bad Duerkheim; Werner Praetorius, Darmstadt, and Hans J. Szymanski, Schifferstadt, all of Fed. Rep. of Germany, assignors to BASF Aktiengesellschaft, Fed. Rep. of Germany

Filed Nov. 27, 1979, Ser. No. 97,814

Claims priority, application Fed. Rep. of Germany, Dec. 16, 1978, 2854428

Int. Cl.³ C07D *233/10, 233/06*

U.S. Cl. 548—347 **14 Claims**

1. A process for the preparation of a 2-imidazoline of the formula

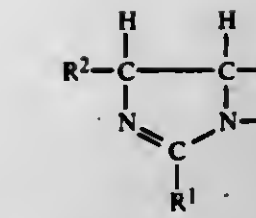 I

where R^1, R^2 and R^3 may be identical or different and each is an aliphatic, cycloaliphatic, araliphatic or aromatic radical, and R^2 and R^3 may also each be hydrogen, by catalytic reaction of a 1,2-diamine with a carbonyl compound or a nitrile, wherein a 1,2-diamine of the formula

$$R^2-\underset{H_2N}{CH}-\underset{NH_2}{CH}-R^3 \qquad \text{II}$$

where R^2 and R^3 have the above meanings, is reacted

(a) with a nitrile of the formula

$$R^1-CN \qquad \text{III}$$

or

(b) with a carbonyl compound of the formula

$$R^1-\overset{O}{\overset{\|}{C}}-R^4 \qquad \text{IV}$$

where R^1 has the above meaning and R^4 is $-OR^2$, $-NH^2$ or

$$-O-\underset{O}{\underset{\|}{C}}-R^1,$$

R^1 and R^2 having the above meanings, in the gas phase at from 200° to 450° C. in the presence of silicon dioxide.

4,298,749

PYRAZOLE ETHER DERIVATIVES

Peter Plath, Ludwigshafen; Wolfgang Rohr, Mannheim; Bruno Wuerzer, Limburgerhof, and Rainer Becker, Bad Durkheim, all of Fed. Rep. of Germany, assignors to BASF Aktiengesellschaft, Fed. Rep. of Germany

Division of Ser. No. 49,506, Jan. 18, 1979, abandoned. This application Mar. 4, 1980, Ser. No. 127,088

Claims priority, application Fed. Rep. of Germany, Jul. 4, 1978, 2829289

Int. Cl.³ C07D *231/20, 231/22*

U.S. Cl. 548—377 **2 Claims**

1. A pyrazole ether derivative of the formula

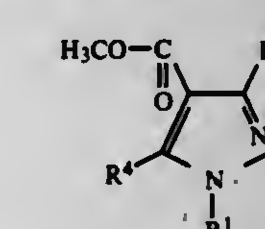

where R^1 denotes

$$-\underset{X}{\underset{\|}{C}}-R^5,$$

X denoting oxygen and R^5 denoting hydrogen, alkyl of 1 to 16 carbon atoms which is unsubstituted or substituted by halogen, or alkoxy of 1 to 4 carbon atoms; alkenyl of 2 to 6 carbon atoms

which is unsubstituted or chlorosubstituted; cycloalkyl of 3 to 8 carbon atoms; aralkyl having 1 to 3 carbon atoms in the alkyl and 6 to 10 carbon atoms in the aryl; aryl of 6 to 10 carbon atoms which is unsubstituted or substituted by fluoro, chloro, bromo, alkyl, alkoxy, and haloalkyl all of 1 to 4 carbon atoms, cyano, nitro, alkoxycarbonyl or alkoxycarbonylamino of 1 to 3 alkyl carbon atoms, R^2 denotes Y-R^7, Y denoting oxygen or sulfur and R^7 denoting linear or branched alkyl of 1 to 18 carbon atoms which is unsubstituted or mono- or polysubstituted by fluoro, chloro, bromo, cyano, nitro, cycloalkyl, alkoxy or alkylthio of 1 to 4 carbon atoms; unsubstituted or fluoro-, chloro-, methoxy-, methyl- or trifluoromethyl-substituted aryloxy of 6 to 10 carbon atoms in the aryl; alkoxycarbonyl, alkylaminocarbamoyl or dialkylaminocarbonyl of 1 to 4 carbon atoms in the alkyl; acyloxy of 2 to 4 carbon atoms in the acyl; linear or branched alkenyl of 3 to 18 carbon atoms which is unsubstituted or mono- or polysubstituted by chloro; cycloalkyl of 3 to 8 carbon atoms which is unsubstituted or mono- or polysubstituted by alkyl, alkoxy, haloalkyl of 1 to 4 carbon atoms, fluoro, chloro or bromo; aryl of 6 to 10 carbon atoms which is unsubstituted or mono- or polysubstituted by fluoro, chloro, bromo, cyano, trifluoromethyl, nitro, or by alkyl, alkoxy, alkylthio, alkoxycarbonyl, alkylaminocarbonyl or dialkylaminocarbonyl, each alkyl being of 1 to 4 carbon atoms; aryl of 6 to 10 carbon atoms which is substituted by phenyl or phenoxy which in turn may be substituted by fluoro or chloro; or phenyl substituted by lower (C_1 to C_4) alkyl esters of (thio)-glycolic acid or (thio)-lactic acid via a (thio)-ether bond, and R^4 denotes hydrogen or methyl, and agriculturally acceptable acid addition salts thereof.

4,298,750
BORANE-1,4-THIOXANE
Herbert C. Brown, West Lafayette, Ind., assignor to Aldrich-Boranes, Inc., Milwaukee, Wis.
Filed Feb. 19, 1980, Ser. No. 122,285
Int. Cl.³ C07D *327/06*
U.S. Cl. 549—4 **4 Claims**

1. Borane-1,4-thioxane.

3. A process of producing borane-1,4-thioxane which comprises contacting 1,4-thioxane with diborane.

4,298,751
CYCLICALLY SUBSTITUTED FULVALENOPHANES
Heinz Staab, Heidelberg, and Joachim Ippen, Cologne, both of Fed. Rep. of Germany, assignors to Basf Aktiengesellschaft, Ludwigshafen, Fed. Rep. of Germany
Filed Aug. 8, 1980, Ser. No. 176,402
Claims priority, application Fed. Rep. of Germany, Sep. 14, 1979, 2937225
Int. Cl.³ C07D *495/02, 495/22*
U.S. Cl. 549—11 **3 Claims**

1. A tetrathiafulvalenophane of the formula

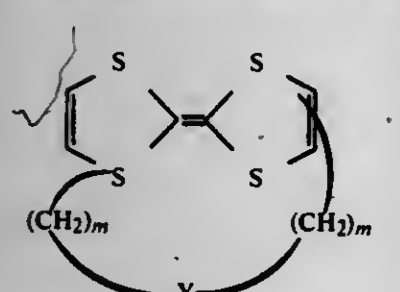

where m is 2, 3, 4 or 5 and Y is

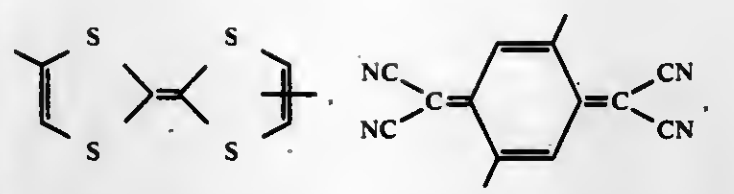

or p-phenylene which may contain cyano, nitro or halogen substituents.

3. A tetrathiafulvalenoparacyclophane of the formula

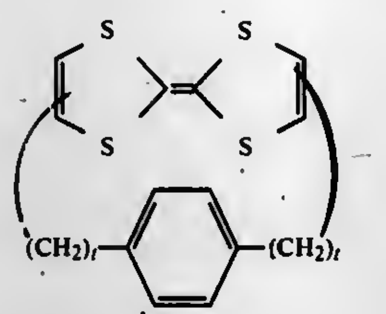

where t is 3, 4 or 5.

4,298,752
CYCLOADDUCT PRECURSORS OF CANTHARIDIN AND METHOD
William G. Dauben, Berkeley; Carl R. Kessel, Union City, both of Calif., and Kazuo H. Takemura, Omaha, Nebr., assignors to Regents of the University of California, Berkeley, Calif.
Filed Sep. 19, 1980, Ser. No. 188,883
Int. Cl.³ C07D *493/18*
U.S. Cl. 549—42 **16 Claims**

7. A compound of the structure

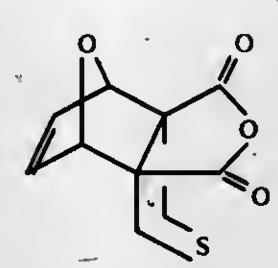

8. A compound of the structure

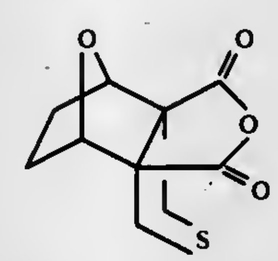

12. A method for producing cantharidin comprising the steps of:

providing a dienophile of the structure

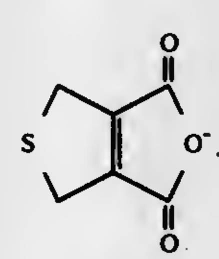

contacting said dienophile with furan to form a reaction solution;

pressurizing said reaction solution at a sufficient pressure to cause formation of a cycloadduct of the structure

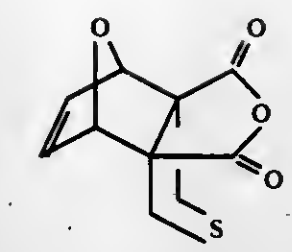

and thereafter reducing and desulfurizing said cycloadduct to form cantharidin.

4,298,753
CONTINUOUS PROCESS FOR PREPARING SILANES AND SILOXANES HAVING SiOC GROUPS
Anton Schinabeck; Norbert Zeller, both of Burghausen; Tassilo Lindner, Mehring-Öd, all of Fed. Rep. of Germany; Georg Engelsberger, Ach, Austria, and Rudolf Riedle, Burghausen, Fed. Rep. of Germany, assignors to Wacker-Chemie GmbH, Munich, Fed. Rep. of Germany
Filed Nov. 24, 1980, Ser. No. 209,447
Claims priority, application Fed. Rep. of Germany, Jan. 10, 1980, 3000782
Int. Cl.³ C07F *7/04, 7/10, 7/18*
U.S. Cl. 556—415 **5 Claims**

1. A continuous process for preparing silanes and polysiloxanes containing SiOC groups which comprises (a) introducing in parallel flow a silicon compound having Si-bonded chlorine and a hydroxyl-containing aliphatic compound in a liquid phase, into a first stage of a first reactor in an amount of from 0.5 to 0.9 gram-mole of hydroxyl group per gram-atom of Si-bonded chlorine; (b) removing the liquid reaction mixture from the first reactor; (c) introducing the reaction mixture into a second stage at the head of a column forming a second reactor which is maintained at an elevated temperature; (d) adding a hydroxyl-containing aliphatic compound as a gas to the column at a point between the lower end and the upper end of the lower one-third of the column in an amount sufficient to at least completely react with the remaining Si-bonded chlorine in the reaction mixture obtained from the first stage and (e) removing the reaction product from the column at a point below the point of addition of the hydroxyl-containing aliphatic compound.

4,298,754
15-DEOXY-16-HYDROXY-16-(1'FLUOROVINYL) PROSTAGLANDINS AND DERIVATIVES
Middleton B. Floyd, Jr., Suffern, N.Y., assignor to American Cyanamid Company, Stamford, Conn.
Filed Jun. 7, 1979, Ser. No. 46,726
Int. Cl.³ C07C *177/00*
U.S. Cl. 560—121 **20 Claims**

1. Compounds of the formula

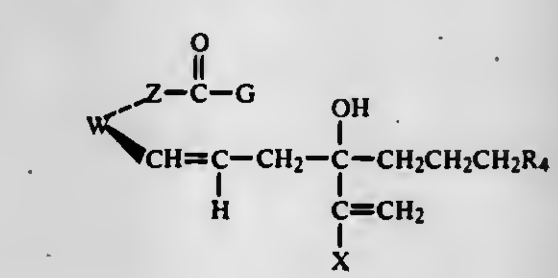

or a racemic mixture thereof and the mirror image thereof wherein W is

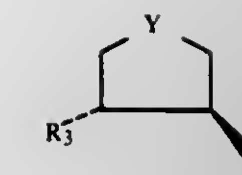

wherein
Y is

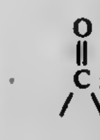

R_3 is selected from the group hydrogen and hydroxy; R_4 is selected from the group hydrogen and C_1 to C_3 alkyl; G is selected from the group hydroxy and C_1 to C_6 alkoxy; Z is selected from the group —$(CH_2)_n$—, —$(CH_2)_mOCH_2$—, and —$(CH_2)_mSCH_2$— wherein n is the integer 5 to 8, and m is the integer 3 to 6; and X is selected from the group fluorine, chlorine and bromine and when G is hydroxy and the pharmaceutically acceptable salts thereof.

4,298,755
CATALYTIC OXYDEHYDROGENATION PROCESS
Chelliah Daniel, and Phyllis L. Bursky, both of Columbus, Ohio, assignors to Ashland Oil, Inc., Ashland, Ky.
Filed Feb. 25, 1980, Ser. No. 124,030
Int. Cl.³ C07C *51/377, 57/05, 67/317, 69/54*
U.S. Cl. 560—214 **4 Claims**

1. In a process for the catalytic conversion of isobutyric acid or a lower alkyl ester thereof to the corresponding α,β-ethylenically unsaturated derivative via the oxydehydrogenation reaction wherein an iron phosphate catalyst is contacted with a gaseous feed stream containing said acid or ester substrate and oxygen at a temperature between about 300° and 500° C., the improvement of effecting said oxydehydrogenation reaction in the presence of a modified iron phosphate catalyst having the gram-atom empirical formula $FeP_{1\text{-}2}Ag_{0.01\text{-}1}O_x$ in which x represents the number of oxygen atoms bound to the other elements in their respective states of oxidation in the catalyst.

4,298,756
1R, CIS
2,2-DIHALOVINYL-3,3-DIMETHYLCYCLOPROPYLMETHANOL AND ESTER DERIVATIVES
Pieter A. Verbrugge, and Petrus A. Kramer, both of Amsterdam, Netherlands, assignors to Shell Oil Company, Houston, Tex.
Division of Ser. No. 32,847, Apr. 24, 1979, abandoned. This application Sep. 24, 1979, Ser. No. 78,276
Claims priority, application United Kingdom, Aug. 17, 1978, 33763/78
Int. Cl.³ C07C *69/145, 69/24, 33/44*
U.S. Cl. 560—231 **5 Claims**

1. A (1R,cis) compound of the formula:

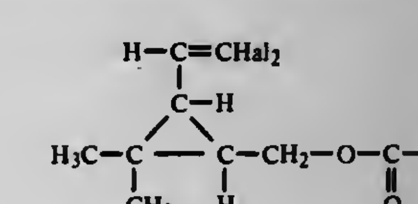

wherein R is an alkyl group containing from 1 to 4 carbon atoms and Hal_2 is two halogen atoms having an atomic number from 9 to 35.

4,298,757
2-[2-(2,2-DIHALOVINYL)-3,3-DIMETHYLCYCLOPROPYL]VINYL ALKANOATES

Johannes Van Berkel, and Hendrik C. Kelderman, both of Amsterdam, Netherlands, assignors to Shell Oil Company, Houston, Tex.

Filed Jul. 9, 1979, Ser. No. 55,858
Claims priority, application United Kingdom, Jul. 19, 1978, 30337/78
Int. Cl.³ C07C *69/145, 69/24*
U.S. Cl. 560—231 **3 Claims**

1. A (1R,cis)-2-[2-(2,2-dihalovinyl)-3,3-dimethylcyclopropyl]vinyl alkanoate wherein each halo independently is chloro, fluoro or bromo and the alkanoate moiety contains from 2 to 6 carbon atoms.

4,298,758
PROCESS FOR THE PRODUCTION OF PROPYLENE GLYCOL ESTERS FROM CHLOROPROPYL ETHERS

Frank T. Cook, and Donald G. Prier, both of Baton Rouge, La., assignors to The Dow Chemical Company, Midland, Mich.

Filed Feb. 11, 1980, Ser. No. 120,438
Int. Cl.³ C07C *67/10, 67/24, 69/16*
U.S. Cl. 560—240 **3 Claims**

1. The preparation of propylene glycol esters from dichloroisopropyl ether by reacting said ether with a lower carboxylic acid and an alkali metal salt of said acid at elevated temperature in the range of about 125° to 300° C. and pressure in the range of from about atmospheric up to about 1000 pounds per square inch guage for a time sufficient to convert substantially all of said chloroether to form a mixture of propylene glycol and dipropylene glycol diesters wherein the mol ratio of the salt to the chloroether is at least about 2 to 1.

4,298,759
SEPARATION OF COBALT AND MANGANESE FROM TRIMELLITIC ACID PROCESS RESIDUE BY EXTRACTION, ION EXCHANGER AND MAGNET

Jon J. Harper, Naperville, and Stephen J. Pietsch, Oak Park, both of Ill., assignors to Standard Oil Company (Indiana), Chicago, Ill.

Filed Dec. 19, 1980, Ser. No. 218,059
Int. Cl.³ C07C *51/42;* B01J *37/00;* C01G *45/00, 49/00*
U.S. Cl. 562—485 **4 Claims**

1. A method of separating cobalt and manganese from residue of trimellitic acid manufacture and from each other where such residue is obtained by separating trimellitic acid from the product of oxidizing liquid pseudocumene in the presence of cobalt and manganese as metal oxidation catalyst, which method comprises extracting said residue with water in the water to residue weight ratio of from 0.25:1 to 6:1 at a final temperature of from 25° C. up to 100° C., contacting the extract solution or a suspension of insolubles in the extract solution with an acid form of cation exchanger, separating the resulting solution or suspension from the exchanger, regenerating the exchanger with an aqueous solution of a strong inorganic acid, collecting the spent aqueous acid solution resulting from said regeneration, adjusting the ph of said collected aqueous solution to a pH of at least 6 while also adding powdered manganese metal to precipitate cobalt as a metal and dissolve the manganese metal, passing the manganese-treated pH-adjusted solution containing suspended metallic cobalt over one or more magnets, recovering the cobalt metal-free aqueous solution, washing metallic cobalt from the magnets with hydrochloric or hydrobromic acid, and dissolving the metallic cobalt in the acid wash.

4,298,760
PROCESS FOR PREPARING 1-AMINOCYCLOPROPANE-1-CARBOXYLIC ACID

Shy-Fuh Lee, Sunnyvale, Calif., assignor to Zoecon Corporation, Palo Alto, Calif.

Filed Aug. 14, 1980, Ser. No. 178,062
Int. Cl.³ C07C *51/09*
U.S. Cl. 562—506 **4 Claims**

1. A process for the preparation of the compound 1-aminocyclopropane-1-carboxylic acid which comprises the steps:

(a) of reacting a compound of the formula

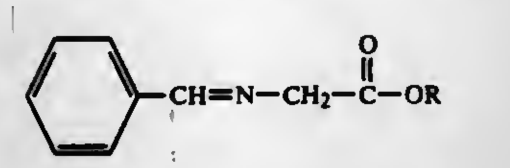

(1)

wherein R is lower alkyl, unsubstituted aryl or aryl substituted at one, two or three of the ring carbon atoms with a group selected from lower alkyl, lower haloalkyl, halogen, nitro, cyano or hydroxy, with the compound $X(CH_2)_2X$ wherein X is bromo, chloro or iodo, in the presence of a base to produce a compound of the formula

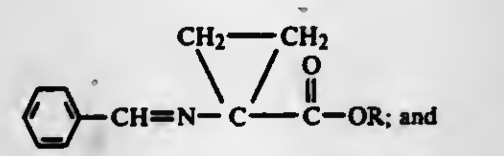

(2)

(b) hydrolyzing said compound (2) to prepare 1-aminocyclopropane-1-carboxylic acid.

4,298,761
PREPARATION OF 4-NITROTHIOANISOLE

Hermann Hagemann, Cologne; Erich Klauke, Odenthal, and Gerd-Michael Petruck, Bergisch-Gladbach, all of Fed. Rep. of Germany, assignors to Bayer Aktiengesellschaft, Leverkusen, Fed. Rep. of Germany

Filed Jan. 9, 1980, Ser. No. 110,588
Claims priority, application Fed. Rep. of Germany, Jan. 30, 1979, 2903505
Int. Cl.³ C07C *149/32*
U.S. Cl. 568—44 **13 Claims**

1. A process for the preparation of 4-nitrothioanisole comprising successively in a single vessel and without intermediate isolation reacting 4-nitrochlorobenzene with Na_2S_2, then with an alkaline Na_2S solution and with a methylating agent.

4,298,762
PROCESS FOR THE OXIDATION OF PRIMARY ALLYLIC AND BENZYLIC ALCOHOLS

William J. Ehmann, Orange Park, and Walter E. Johnson, Jr., Jacksonville, both of Fla., assignors to SCM Corporation, New York, N.Y.

Continuation of Ser. No. 582,113, May 30, 1975, abandoned. This application Dec. 5, 1979, Ser. No. 100,558
The portion of the term of this patent subsequent to Oct. 25, 1994, has been disclaimed.
Int. Cl.³ C07C *45/29*
U.S. Cl. 568—433 **7 Claims**

1. An Oppenauer oxidation of a primary alcohol selected from the group consisting of; methallyl alcohol, perillyl alcohol, myrtenol, benzyl alcohol, p-hydroxy benzyl alcohol, saligenin, vanillyl alcohol and 2,6-dimethyl-2,7-octadien-1-ol to the corresponding aldehyde in the presence of from 1 to 15 mol percent based on the alcohol charged of an Oppenauer oxidation catalyst and furfural as the hydrogen acceptor under mild temperature Oppenauer oxidation conditions said temperature being in the range of from ambient temperature to 75° C., said hydrogen acceptor being present in a molar ratio of furfural to primary alcohol of about 10:1-1:10, and forming a reaction product mixture containing the aldehyde corresponding to the primary alcohol, and as a by-product, furfuryl alcohol.

4,298,763
PREPARATION OF α,β-OLEFINICALLY UNSATURATED ALDEHYDES OF 3 OR 4 CARBON ATOMS

Heinz Engelbach, Limburgerhof; Richard Krabetz, Kirchheim; Gerd Duembgen, Dannstadt-Schauernheim; Carl-Heinz Willersinn, and Walter Beitelschmidt, both of Ludwigshafen, all of Fed. Rep. of Germany, assignors to BASF Aktiengesellschaft, Fed. Rep. of Germany

Filed Mar. 3, 1980, Ser. No. 126,896
Claims priority, application Fed. Rep. of Germany, Mar. 12, 1979, 2909597
Int. Cl.³ C07C *47/22*
U.S. Cl. 568—479 **3 Claims**

1. In a process for the preparation of acrolein or methacrolein by oxidation of propylene or isobutylene with an oxygen-containing gas mixture under conventional conditions over a supported catalyst possessing a firmly adhering coating, from 150 to 1,500 μm thick, which contains calcined catalytic material of the composition

$$Mo_{12}Bi_{0.1-4}Fe_{0.5-6}P_{0-1}Me_b^2Me_c^3Me_e^5O_x$$

where Me^2 is Ni and Zn, Me^3 is K, Rb and/or Cs, Me^5 is In and/or Na, b is 8 to 9, b for Ni being 5.5 to 8.5, c is from 0.01 to 0.1, e is from 0.01 to 0.2, and x is the number of oxygen atoms required to saturate the valencies of the other constituents, and a carrier core having a surface area of less than 15 m^2/g and a diameter of more than 100 μm, the improvement that the coated catalyst employed has been prepared by applying calcined catalytic material having a particle size of from 0.1 to 300 μm, in an amount of from 1 to 40 g/min/liter of carrier and water in a weight ratio of catalytic material to water of from 1:1 to 8:1, continuously and separately from one another, each at a constant speed, to vigorously agitated carrier particles which may or may not have been pre-moistened with water in an amount of up to 95% of the water absorbency of the particles, the preparation of the catalyst being carrier out in such a way that the water content of the coating which forms is less than the maximum degree of saturation of the catalytic material.

4,298,764
PREPARATION OF ALKYL GLYCERYL ETHER ALCOHOLS

Sidney Berkowitz, Highland Park, N.J., assignor to FMC Corporation, Philadelphia, Pa.

Continuation-in-part of Ser. No. 61,219, Jul. 27, 1979, abandoned. This application Mar. 21, 1980, Ser. No. 132,485
Int. Cl.³ C07C *41/03*
U.S. Cl. 568—618 **13 Claims**

1. A process for preparing n-alkyl glyceryl ether alcohols of the general formula:

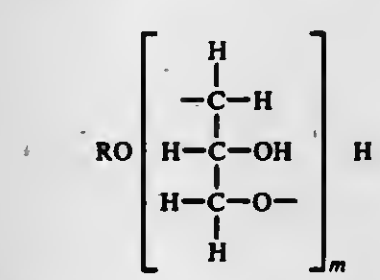

wherein R is a C_{10}–C_{20} n-alkyl radical and m is a number from 1 to about 10, which comprises the steps of bringing together and reacting a C_{10}–C_{20} n-alkyl primary alcohol and crude glycidol which is predissolved in a non-polar, non-reactive and miscible solvent selected from the group consisting of benzene, toluene, ortho-xylene, meta-xylene, para-xylene and mesitylene, in the presence of a basic catalyst in a reaction zone, said alcohol and glycidol being brought together and reacted in a molecular ratio within the range of from about 1:0.9 to about 1:10; maintaining the resulting reaction mass in an agitated condition; maintaining the temperature of the reaction mass within the range of from about 125° to about 180° C. during the reaction period; separating said non-polar solvent from the reaction mass; and recovering a C_{10}–C_{20} n-alkyl glyceryl ether alcohol product.

4,298,765
PURIFICATION OF PHENOL WITH REDUCED ENERGY CONSUMPTION

Jerry R. Cochran, Chatham, N.J.; Thomas H. Insinger, Philadelphia; Gerald E. Hollenbach, Feasterville, both of Pa.; Ronald F. Piskorz, Cheektowaga, and Addison M. Smith, Amherst, both of N.Y., assignors to Allied Corporation, Morris Township, Morris County, N.J.

Filed Mar. 26, 1980, Ser. No. 134,040
Int. Cl.³ C07C *37/76*
U.S. Cl. 568—754 **10 Claims**

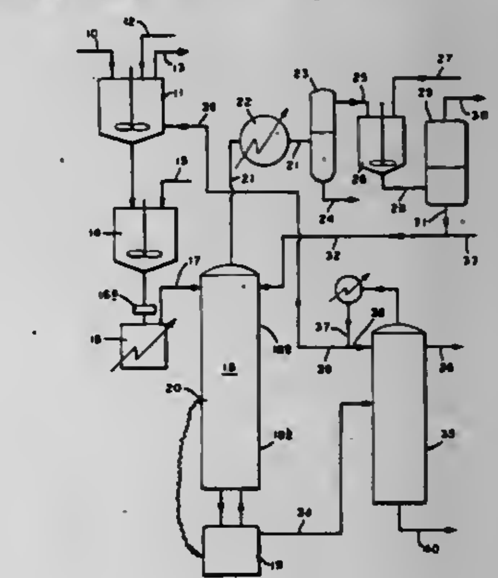

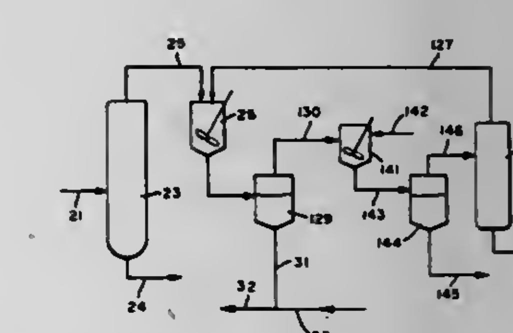

1. In the process of purifying phenol produced by the cleavage of cumene hydroperoxide wherein the feed phenol is treated with a base, the treated phenol is steam distilled to remove a lites fraction as a water azeotrope and the bottoms of the steam distillation are distilled to recover high purity phenol as an overhead; the improvement wherein the overheads of the steam distillation are condensed and organics are extracted with an organic solvent which preferentially dissolves benzofuran impurities to produce a reflux aqueous phase and the reflux aqueous phase is returned to the steam distillation.

4,298,766

PREPARATION OF 2-METHYL-PENTANE-2,4-DIOL

Franz J. Broecker; Karl G. Baur, both of Ludwigshafen; Rolf Platz, Mannheim, and Joachim Stabenow, Weinheim, all of Fed. Rep. of Germany, assignors to BASF Aktiengesellschaft, Fed. Rep. of Germany

Filed Sep. 17, 1979, Ser. No. 76,392

Claims priority, application Fed. Rep. of Germany, Oct. 2, 1978, 2842942

Int. Cl.³ C07C *29/136*

U.S. Cl. 568—862 **1 Claim**

1. A process for the preparation of 2-methyl-pentane-2,4-diol by catalytically hydrogenating diacetone-alcohol at an elevated temperature, wherein a catalyst obtained by heating a compound of the formula $Ni_6Al_2(OH)_{16}CO_3.4H_2O$ for from 5 to 24 hours at from 300° to 450° C. and treating the resulting product with hydrogen for from 12 to 60 hours at from 300° to 450° C. is used and wherein the hydrogenation is carried out at a pressure of from 1 to 300 bar and at from 50° to 120° C. in two trickle reactors, the first reactor being operated with recycling and the second reactor without recycling.

ELECTRICAL

4,298,767

SUPPORT FOR A HEATING ELEMENT IN AN ELECTRIC FURNACE

Seiichi Takigawa, Nagoya, Japan, assignor to Taki Industries Co., Ltd., Japan

Filed Jun. 23, 1980, Ser. No. 161,684

Claims priority, application Japan, Jun. 26, 1979, 54-80988

Int. Cl.³ F27D *1/10;* **H05B** *3/06*

U.S. Cl. 13—25 **9 Claims**

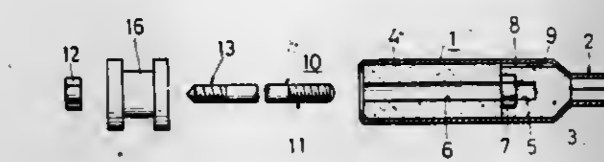

1. A support for a heating element in an electric furnace, said support comprising:

a cylindrical holder made of heat resisting metal and fixed to the wall surface of said electric furnace;

a pair of separated insulators secured within said cylindrical holder and having central holes respectively;

a stud bolt made of heat resisting metal of which one end being detachably engaged through said central holes with a member provided within one of said insulators;

heat insulating layers being laminated on said wall surface of said electric furnace over the other end of said stud bolt; and

a hook insulator mounted to said other end of said stud bolt for hanging said heating element.

4,298,768

CESIUM VAPOR THERMIONIC CURRENT GENERATOR

Allan D. Israel, P.O. Box 5627, Lexington, Ky. 40555, and Herbert H. Fowler, 1532 Yates Crescent #42, Lexington, Ky. 40505

Filed Mar. 13, 1979, Ser. No. 20,180

Int. Cl.³ H01L *37/00, 35/30*

U.S. Cl. 136—202 **12 Claims**

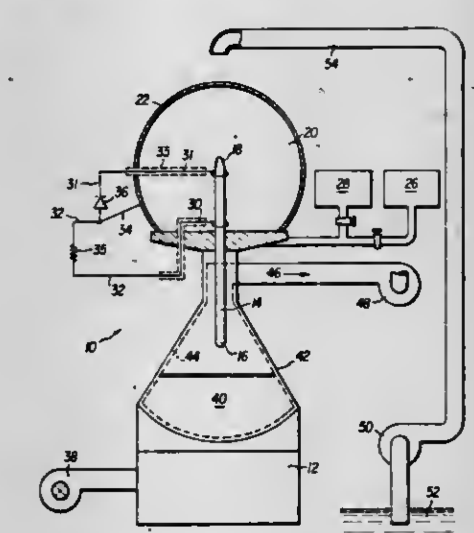

1. An electron current generator comprising

(a) a heat source

(b) a heat pipe having its first end suspended in thermal relationship with the heat source at its second end projecting upward therefrom,

(c) a closed chamber surrounding said second end and containing an alkali metal vapor maintained at a substantially reduced pressure with respect to the atmosphere,

(d) cooling means for cooling the surface of the chamber remote from said heat pipe second end,

(e) a first and a second wire attached to said heat pipe second end, the first wire leading to an electrical load outside said chamber, the second wire traversing said chamber to a voltage stabilizing forward biased solid state diode network outside said chamber and

(f) an electrical conductor attached to said surface of the chamber remote from said heat pipe second end leading to a common electrical junction between said load and said diode network.

4,298,769

HERMETIC PLASTIC DUAL-IN-LINE PACKAGE FOR A SEMICONDUCTOR INTEGRATED CIRCUIT

Paul Richman, St. James, N.Y., assignor to Standard Microsystems Corp., Hauppauge, N.Y.

Continuation of Ser. No. 103,727, Dec. 14, 1979, abandoned, which is a continuation of Ser. No. 916,837, Jun. 19, 1978, abandoned. This application Jan. 28, 1981, Ser. No. 229,193

Int. Cl.³ H05K *5/06*

U.S. Cl. 174—52 FP **6 Claims**

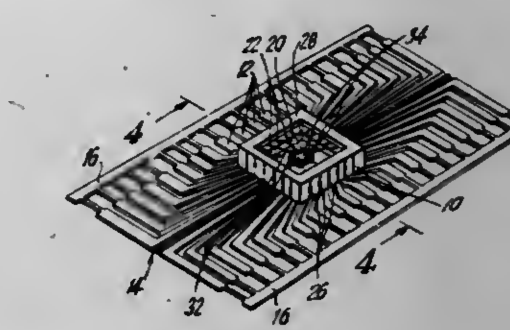

1. A hermetic package for a semiconductor chip, said package comprising a ceramic chip carrier including a recessed portion having a bottom surface and at least one raised surface surrounding said recessed portion, a plurality of spaced conducting fingers arranged on said raised surface and extending to and terminating at the bottom surface of said chip carrier, a semiconductor chip in said recessed portion and including a plurality of bonding locations thereon, a corresponding plurality of bonding wires connected between said bonding locations and selected ones of said conducting fingers, a lid covering said carrier and sealing said chip within said carrier, and a lead frame separate from said chip carrier and having a significantly larger surface area than that of said chip carrier, said lead frame including a plurality of substantially rigid but bendable space leads constituting a free-standing assembly, each of said leads including spaced inner ends extending inwardly toward and terminating at a central portion of said lead frame to define the periphery of a central opening in said lead frame, said chip carrier being mounted to said lead frame over said central opening and being supported by said inner ends of said leads, said inner ends of said leads also being electrically connected to said conducting fingers at the bottom surface of said chip carrier, each of said leads further including an angular intermediate portion integral with and projecting away from said inner end and an outer portion integral with said intermediate portion and bent downward from said intermediate portion in a direction substantially perpendicular to said intermediate portion, said outer portions of said leads being spaced and substantially parallel to one another and defining the external connections for the package.

4,298,770

PRINTED BOARD

Mikio Nishibara, Yokohama; Masahiro Oda, and Takamitsu Tsuchimoto, both of Kawasaki, all of Japan, assignors to Fujitsu Limited, Japan

Filed Aug. 24, 1979, Ser. No. 69,346

Claims priority, application Japan, Aug. 25, 1978, 53/103453

Int. Cl.³ H05K *1/02*

U.S. Cl. 174—68.5 **14 Claims**

1. A printed board comprising:

a board having a plurality of through holes formed therein and located on intersecting points of an X-Y orthogonal

basic grid, and an oblique conductor pattern formed on said board, wherein conductors are formed along channels, one conductor passes between adjacent grid points arranged in an X direction, two or more conductors pass

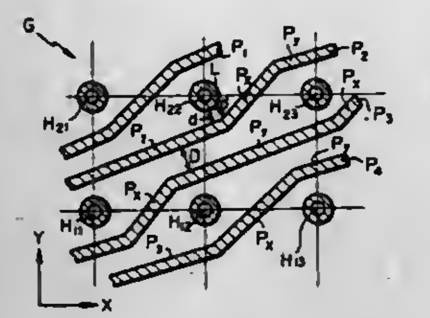

between adjacent grid points in a Y direction, and each conductor obliquely extends in a zigzag line with the meandering being regularly repeated so as to not contact the grid points.

4,298,771

BOLTED/WELDED JOINT AND METHOD OF PERFECTING SAME

William F. Olashaw, Plainville, Conn., assignor to General Electric Company, New York, N.Y.

Filed May 19, 1980, Ser. No. 150,856

Int. Cl.³ H02G *5/00*

U.S. Cl. 174—71 B **15 Claims**

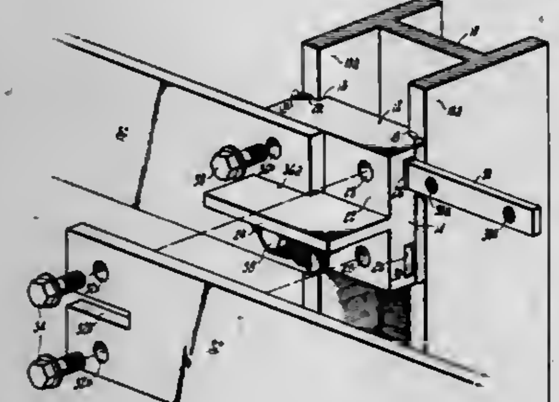

1. An electrical bus joint joining first and second aluminum busbars, said bus joint comprising, in combination:

A. an aluminum connector including a body welded in electrical connection with the first busbar and a projection rising from a planar surface of said body;

B. means forming an opening in a terminal portion of the second busbar;

C. fixturing means incorporated in the terminal portion of the second busbar and said connector body accommodating clamping the second busbar terminal portion in electrical connection with said planar body surface with said projection protruding through said opening in the second busbar terminal portion; and

D. a weld electrically joining said projection to the second busbar along the edge of said opening therein and maintaining the clamped electrical connection between the second busbar terminal portion and said planar body surface achieved by said fixturing means.

4,298,772

COORDINATE READER USING ADJUSTABLE MAGNETOSTRICTIVE OSCILLATIONS

Toshihiko Kobayashi, Musashino, and Tetsusaburo Kamibayashi, Niza, both of Japan, assignors to Kokusai Denshin Denwa Kabushiki Kaisha, Tokyo, Japan

Filed Jul. 6, 1979, Ser. No. 55,279

Claims priority, application Japan, Jul. 7, 1978, 53-81975

Int. Cl.³ G01R *33/00;* G01B *7/14;* G08C *21/00*

U.S. Cl. 178—18 **8 Claims**

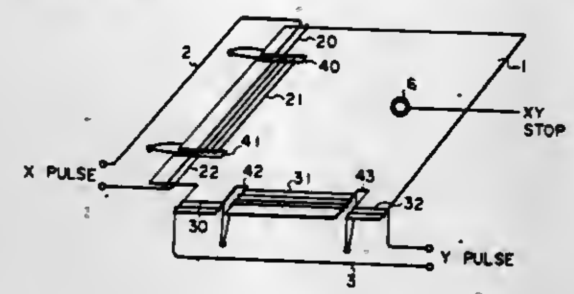

1. A coordinate reader comprising: a magnetostrictive plate, a plurality of excitation means each including at least three coils mounted on the magnetostrictive plate in two directions of coordinate axes along its marginal edges for generating magnetostrictive oscillation waves in the magnetostrictive plate, a detection coil employed to be placed at a desired position on the propagation paths of the magnetostrictive oscillation waves, measuring means for obtaining a numerical value of the coordinates of the position of the detection coil from a time difference between the excitation of the magnetostrictive plate by the excitation means and the detected output from the detection coil, and adjusting means for adjusting said excitation means so as to adjust the numerical value obtained by said measuring means so that when the detection coil is disposed on the magnetostrictive plate at each position equally spaced from each of the coordinate axes, substantially equal numerical values are obtained from the measuring means.

4,298,773

METHOD AND SYSTEM FOR 5-BIT ENCODING OF COMPLETE ARABIC-FARSI LANGUAGES

Khaled M. Diab, P.O. Box 13457, Orlando, Fla. 32859

Continuation of Ser. No. 924,679, Jul. 14, 1978, abandoned, which is a continuation-in-part of Ser. No. 846,824, Oct. 31, 1977, Pat. No. 4,145,570. This application Jan. 7, 1980, Ser. No. 109,943

Int. Cl.³ B41J *5/00;* H04L *3/00*

U.S. Cl. 178—30 **16 Claims**

1. An electronic typewriting system for Arabic-Farsi languages comprising:

a. a keyboard having a plurality of keys each corresponding to at least one of a single form of an Arabic character of the Arabic-Farsi language, a numeral, punctuation and command character and means for generating a succession of multi-bit character codes in response to actuation of the keys, wherein each character code represents one of an Arabic character of the Arabic-Farsi language, numerals, punctuation and command character and the character code for each Arabic character is independent of the form thereof;

b. an Arabic adapter for converting the form independent character codes into the proper language form for display comprising

i. means dividing the characters into one of at least three groups and for inserting one of at least three multi-bit level codes into the succession of character codes to identify at least one associated character code as representing characters of one of the three groups of characters;

ii. means for receiving and storing the codes for at least two successive characters;

iii. means responsive to the stored codes for classifying each received character as one of a plurality of predetermined character types; and

iv. means for generating a form code for each received Arabic character identifying same as one of four Arabic character forms in response to the classification of the character immediately preceding and immediately following the Arabic character under consideration; and

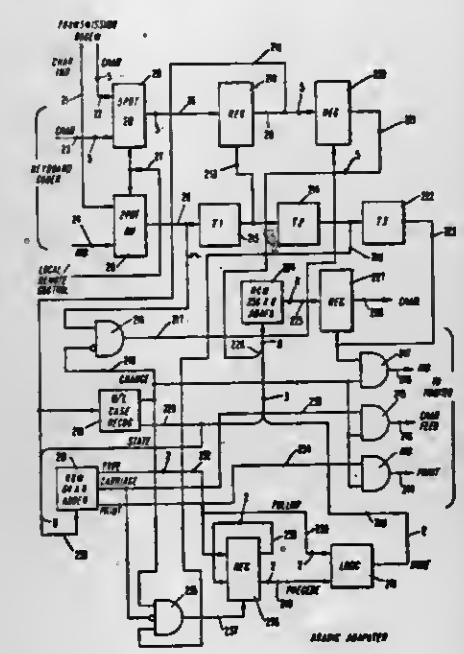

c. display means responsive to the received codes and the form code for each of a succession of characters for displaying the last entered character in a first display without regard to form and for displaying each Arabic character in its proper form in successive positions in a second display including means for displaying the successive characters in the same position in response to an indication from the means for classifying that a received character is of a predetermined type for which the display position is not to change.

4,298,774

CALL WAITING SIGNAL ARRANGEMENT

Julius Jusinskas, Jr., Glen Ellyn, Ill., assignor to GTE Automatic Electric Labs Inc., Northlake, Ill.

Filed May 2, 1979, Ser. No. 35,139

Int. Cl.³ H04M *3/02, 3/42*

U.S. Cl. 179—18 BG **2 Claims**

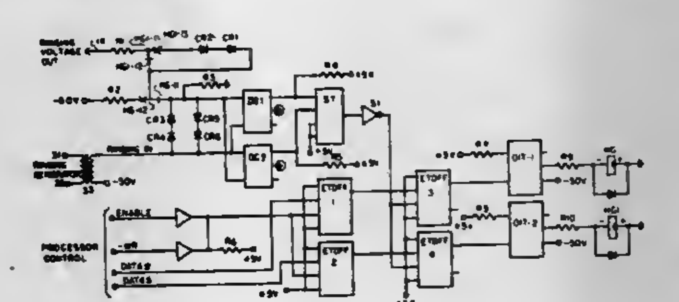

1. A signalling arrangement for applying a call waiting signal to selected ones of a plurality of telephone lines connected to a telephone exchange, wherein said exchange includes a ringing signal generator, a ringing signal distribution bus and a control means, and further including a rectifier means and a connect means comprising a relay having a set of make and break contacts operated to connect said ringing generator to said distribution bus via said make contacts and alternately to connect said ringing generator to said bus via said rectifier means and said break contacts, a ringing signal bus connect means associated with each telephone line for connecting said line to said ringing signal bus, and control means operative upon the indication of a call waiting condition for a particular line, to operate said ringing signal bus connect means associated with said line in the alternate periods of said connect means, whereby said ringing signal distribution bus is alternately used for distributing said ringing signal and said call waiting signal.

4,298,775

MICROPROCESSOR CONTROLLED TELEPHONE SET

Norman R. Buck, Sioux Falls, S. Dak., and David J. Hanson, Apple Valley, Minn., assignors to Vital Signs, Inc., Minnetonka, Minn.

Filed Mar. 14, 1979, Ser. No. 20,325

Int. Cl.³ H04M *1/00*

U.S. Cl. 179—81 R **7 Claims**

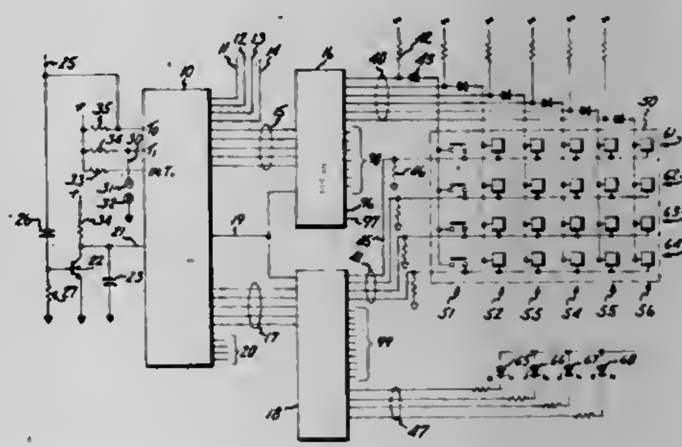

1. A telephone set for use in a telephone network having a switch gear connected to incoming telephone lines and to a plurality of telephone stations for establishing communication between selected stations and/or incoming lines, the telephone set including means for receiving and transmitting voice communications and the switch gear having a memory capability to receive command and control signals from the telephone set, transmit confirmation and control signals to the telephone set, and perform selected functions in response to the command and control signals, comprising:

(a) a plurality of manually actuated switches, each of said switches corresponding to a selected function;

(b) a programmable microprocessor having means for automatically scanning said switches, detecting an actuated switch and generating a plurality of command and control signals in a predetermined sequence associated with a selected function;

(c) means for transmitting selected ones of said command and control signals to the switch gear; and

(d) means for receiving confirmation and control signals from the switch gear and transmitting said confirmation and control signals to said microprocessor.

4,298,776

MOTOR VEHICLE IGNITION-STARTER SWITCH

Siegfried Sondermann, Honsel 290, 5880 Lüdenscheid, Fed. Rep. of Germany

Filed May 29, 1979, Ser. No. 43,477

Claims priority, application Fed. Rep. of Germany, Jun. 3, 1978, 2824464

Int. Cl.³ H01H *9/00, 21/18*

U.S. Cl. 200—11 C **9 Claims**

1. In a motor vehicle ignition-starter switch having a housing including a base part provided with a middle contact and a plurality of border contacts, a switch wheel having a first switching bridge permanently abutting the middle contact and arranged to be rotated into contact with border contacts on said base part, a bridging element having a double-contact head in contact with a contact of said first switching bridge and arranged to be rotated into contact with further border contacts, a further switching bridge, making contact through a take-off contact on said double-contact head and arranged to

slidably engage said border contacts; the connecting bridges and the bridging element being pretensioned by springs toward the base part, and a springably pretensioned starting repetitive retaining element the improvement comprising: two ring segment contact bridges of the switch wheel on ring wall portions thereof, which cooperate with two contact spring pairs and being guided in a circumferential wall of the housing and an ignition repetitive retaining element in the form of a catch,

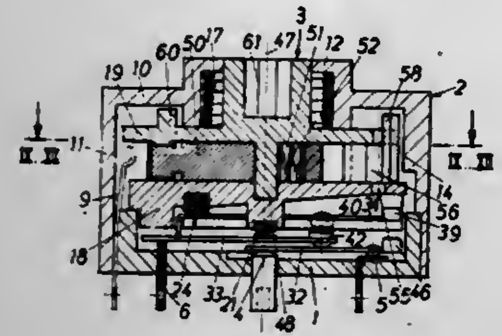

pivotally supported on said switch wheel about an axis parallel to the switch wheel axis and a catching profile being arranged on a slide guided for radial sliding on said wheel toward said catch, a switch part extending perpendicular to the axis of the catch pivot and pretensioned towards the catch axis, said slide having a contact bridge thereon which cooperates with a further contact spring pair in the circumferential wall of the housing.

4,298,777

DISTRESS GAS GENERATING SIGNAL BALLOON APPARATUS

Clyde C. Bryant, 1920 Forrest Ave., East Point, Ga. 30344
Division of Ser. No. 831,120, Sep. 7, 1977, Pat. No. 4,185,582. This application Oct. 25, 1979, Ser. No. 88,140
Int. Cl.³ H01H *35/00*
U.S. Cl. 200—61.45 R **8 Claims**

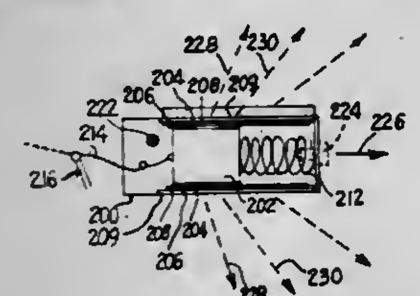

1. A unidirectional inertial activator comprising a casing, a mass having front and rear faces held within the casing and conforming to the shape of the casing, friction pads and friction plates surrounding said mass, pressure plates surrounding said friction plates, a thin elastic layer within said casing surrounding said pressure plates, said friction plates and friction pads being pressed against said mass by said pressure pads and having a high coefficient of friction with said mass, a pressure responsive means located proximate to the front face of said mass and serving to separate said mass from the front wall of said casing, and an activating means connected to the rear face of said mass in a manner that if the activator is subjected to a force greater than its angle of repose, the activating means is employed.

4,298,778

WATERPROOF SEAL FOR A PUSH-BUTTON

Godric P. K. Beresford-Jones, Sandbanks, Seal, Near Sevenoaks, Kent, England
Filed Jan. 23, 1980, Ser. No. 114,661
Claims priority, application United Kingdom, Jan. 25, 1979, 02745/79
Int. Cl.³ H01H *9/04*
U.S. Cl. 200—302 **5 Claims**

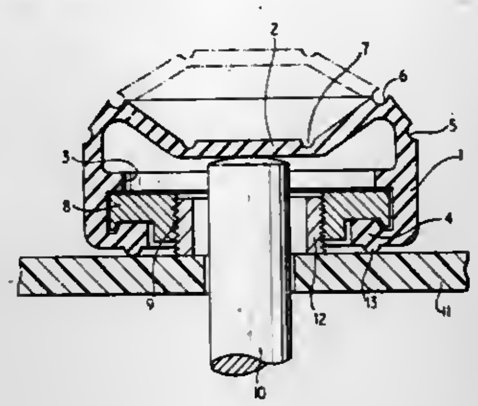

1. A waterproof seal for a push-button in a panel; comprising a shroud of flexible and resilient material having a substantially cylindrical portion and an end wall closing one end to shroud the push-button; said end wall being normally resiliently biased from a first to a second position in which said end wall is inwardly collapsed to provide a visual and tactile indication of the position of the push-button; and sealing means for sealing the open end of said shroud to the panel.

4,298,779

ROTARY TYPE MICROSWITCH

Haruhiko Mihara, Tsu, Japan, assignor to Matsushita Electric Works, Ltd., Osaka, Japan
Filed Jan. 7, 1980, Ser. No. 110,102
Claims priority, application Japan, Jan. 13, 1979, 54/3122[U]; Jan. 13, 1979, 54/3123[U]; Jan. 13, 1979, 54/3261
Int. Cl.³ H01H *3/04, 5/04*
U.S. Cl. 200—335 **5 Claims**

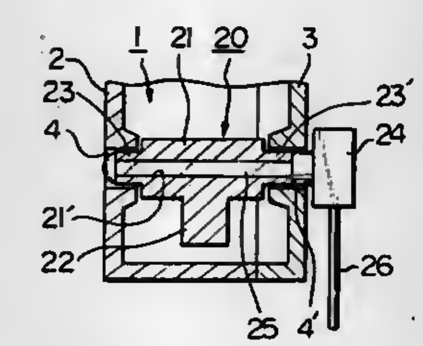

1. In a rotary type microswitch wherein a movable contact carrier carries a movable contact opposed to at least one stationary contact and is displaced between its normal non-operating position and an operating position in response to an external force to change the contacting state of said movable contact relative to said stationary contact, the combination comprising a housing having two side walls provided at mutually opposing and axially aligned positions with a pair of shaft bearing holes respectively communicating the interior of the housing with the exterior, a handle member rotatably mounted in said bearing holes and including an arm extending generally laterally from an axis of rotation of said handle member and operably engaged with said movable contact carrier to displace the latter, said handle member including a hole extending axially therethrough and being open at both ends such that both ends are accessible from the exterior through said bearing holes, a shaft bar extending axially in said axial hole and being

non-rotatable relative to said handle member, a lever arm disposed exteriorly of said housing and coupled to one end of said bar through a respective bearing hole, said lever arm extending laterally of said axis to rotate said handle member and displace said movable contact carrier in response to an external force, the opposite end of said bar reaching the associated end of said handle member and being integrally fixed thereto.

4,298,780

MICROWAVE HEATING APPARATUS WITH RESISTIVE HEATERS

Yukio Suzuki, Fuji, Japan, assignor to Tokyo Shibaura Denki Kabushiki Kaisha, Kawasaki, Japan
Filed Mar. 12, 1980, Ser. No. 129,644
Claims priority, application Japan, Mar. 19, 1979, 54-35246[U]
Int. Cl.³ H05B *6/68, 6/76*
U.S. Cl. 219—10.55 B **5 Claims**

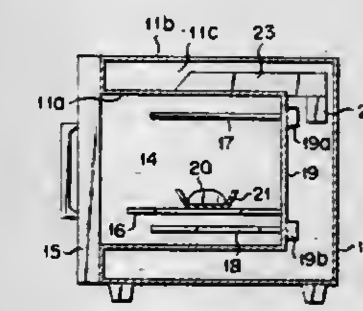

1. A microwave heating apparatus comprising:
a heating chamber for receiving food to be heated by said heating apparatus, said heating chamber having a wall with a bore therethrough;
a microwave generator for generating microwave energy to be conducted within said heating chamber for microwave heating food within said chamber;
a detachable resistive heating element for generating heat within said chamber for heating food within said chamber, said element having a voltage terminal and an insulating sheath wrapped about a portion thereof, the sheath having a projection thereon;
a control circuit for selectively coupling power from a power source to said microwave generator and/or said resistive heating element; and
a heater coupling means positioned substantially at the bore in said wall but on the opposite side thereof from said heating chamber for (a) holding said detachable resistive heating element within said chamber and (b) coupling electrical power from said control circuit to said terminal of said resistive heating element, said heater coupling means including
a displaceable member adapted to be displaced when an elbow portion thereof fully contacts with said projection of said insulating sheath whenever said detachable resistive heating element is inserted through said bore to a predetermined position within said heater coupling means; and
a switch element, actuable by said displaceable member, for inhibiting said control circuit from applying power to said microwave generator and resistive heating element when said heating element is not inserted to said predetermined position.

4,298,781

WIRE-CUT ELECTROEROSION MACHINE AND METHOD OF OPERATING SAME

Kiyoshi Inoue, Tokyo, Japan, assignor to Inoue-Japax Research Incorporated, Yokohama, Japan
Filed Apr. 30, 1979, Ser. No. 34,860
Claims priority, application Japan, Jun. 8, 1978, 53-69086; Jan. 24, 1979, 54-6106
Int. Cl.³ B23P *1/02*
U.S. Cl. 219—69 W **11 Claims**

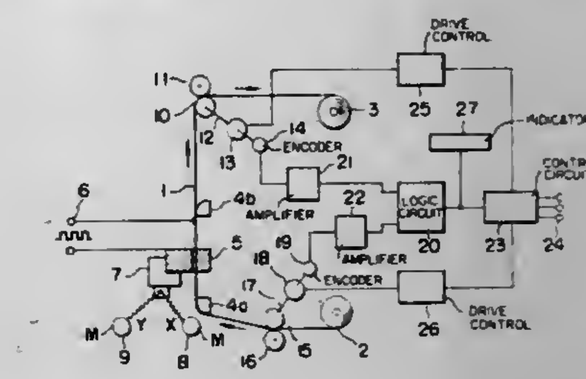

1. A wire-cut electroerosion machine for cutting a workpiece with a continuous traveling wire constituting an electroerosion electrode, comprising:
supply means for said wire;
take-up means for said wire;
a pair of guide members for guiding said wire across a cutting zone in which a machinable portion of said workpiece is positioned;
rotary traction means having a first rotary shaft for advancing said wire through said cutting zone from said supply means and permitting said wire to be collected onto said take-up means downstream of said cutting zone;
rotary brake means having a second rotary shaft for applying a braking force to said wire to cause it to be stretched between said guide members while being continuously advanced through said cutting zone therebetween;
first sensing means responsive to the rotation of said first rotary shaft for providing a first electrical sensing signal representing the rate of rotation thereof;
second sensing means responsive to the rotation of said second rotary shaft for providing a second electrical sensing signal representing the rate of rotation thereof; and
circuit means responsive to said first and second electrical sensing signals for deriving therefrom an electrical output signal representing a deviation of tension of said wire advancing through said cutting zone between said brake and traction means from a predetermined value.

4,298,782

METHOD AND APPARATUS FOR STRAIGHTENING THE WIRE ELECTRODE OF AN ELECTRICAL DISCHARGE MACHINING APPARATUS

Alain Wavre, Geneva, Switzerland, assignor to Ateliers des Charmilles, S.A., Geneva, Switzerland
Filed May 21, 1979, Ser. No. 40,673
Claims priority, application Switzerland, May 29, 1978, 5827/78
Int. Cl.³ B23P *1/02*
U.S. Cl. 219—69 M **31 Claims**

1. In a method for cutting by electrical discharges an electrode workpiece by means of an electrode tool in the form of a wire, wherein said wire is displaced relative to said workpiece by being supported by a pair of spaced-apart support and guiding means between which said wire is stretched by a predetermined force of traction applied to said wire, wherein successive voltage pulses are applied across said electrodes for triggering current pulses, and wherein a transverse force is applied to said wire tending to misalign said wire with said support and guiding means, the improvement comprising mea-

suring a signal representing machining efficiency, varying momentarily the predetermined force of traction applied to the wire, measuring the influence exerted by varying said predetermined force of traction upon said signal representing machining efficiency, and adjusting as a function of said last

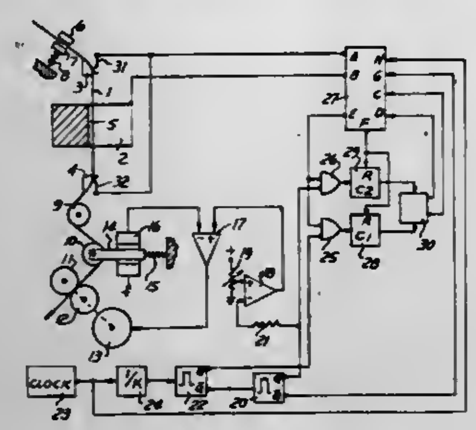

measurement a machining parameter causing said transverse force to be applied on said wire such as to reduce to a minimum value the influence of said variation of force of traction upon said signal representing machining efficiency whereby said machining parameter is adjusted in a direction tending to align said wire with said support and guiding means.

4,298,783

DEEP NARROW GROOVE TUNGSTEN INERT GAS SHIELDED WELDING PROCESS

Urban A. Schneider, St. Petersburg; Robert E. Monley; Robert L. Nelson, both of Tampa, and Raymond H. Glatthorn, St. Petersburg, all of Fla., assignors to Westinghouse Electric Corp., Pittsburgh, Pa.

Filed Sep. 20, 1979, Ser. No. 77,208

Int. Cl.³ B23K *9/16*

U.S. Cl. 219—75 3 Claims

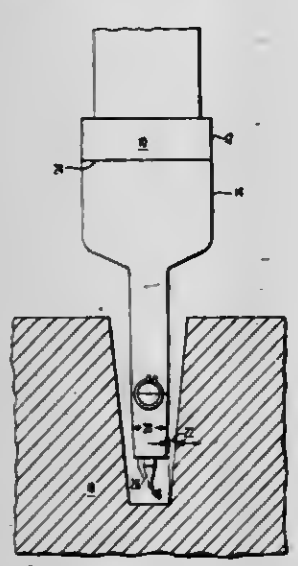

1. A method of applying a gas shielded tungsten arc welding process in a deep, narrow groove joint wherein the shield gas is directed to the weld puddle through an elongated gas nozzle which surrounds a substantial length of the welding electrode and is sized to extend into the groove, including the step of incrementally increasing the width of the nozzle to correspond to increases in the width of the groove at preselected increases in the width of the groove as the nozzle is withdrawn from the groove during successive weld passes.

4,298,784

ARRANGEMENT FOR MEASURING THE DISTANCE BETWEEN A METALLIC WORKPIECE AND A PROCESSING TOOL

Karl-Heinz Schmall, Moncalieristr. 5, 757 Baden-Baden, Fed. Rep. of Germany

Filed Jun. 29, 1979, Ser. No. 53,255

Claims priority, application Fed. Rep. of Germany, Jul. 7, 1978, 2829851

Int. Cl.³ B23K *9/10*

U.S. Cl. 219—124.02 7 Claims

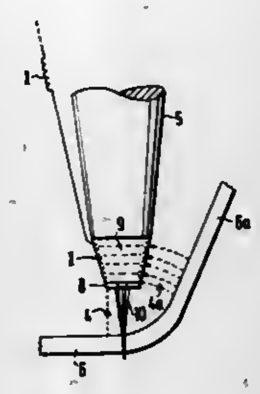

1. In an arrangement for measuring the distance between a metallic workpiece and a processing tool moved toward and away from the workpiece, especially for adjusting the distance of acetylene, plasma and laser cutting machines whereby at least one sensing device facing the surface of the workpiece to be processed is provided to the tool; wherein the electrical properties of the sensing device can be affected by selectively reducing and increasing the distance to the workpiece and whereby the sensing device is connected to an electrical circuit to evaluate the changes of the electrical properties of the sensing device, the improvement being a compensation sensing arrangement in addition to the sensing device, the compensation sensing arrangement being arranged laterally on the tool to be affected by elevations of the workpiece disposed parallel to the direction of movement of the tool, each of the sensing device and the compensation sensing arrangement having a reactance which can be affected by the workpiece to comprise a pair of reactances, one of the reactances being inductive and the other being capacitive, and the reactances are dimensioned and electrically connected in opposition in such a way that by a predetermined lateral approach of the workpiece to the electrodes the tool can be compensated by changes of the respective inductive and capacitive reactances which are numerically about equal but are electrically oppositely directed.

4,298,785

METHOD AND DEVICE FOR AUTOMATICALLY TRACKING SYSTEMS TO THE CENTER OF WELD GAPS, WELD JOINTS AND WELD REINFORCEMENTS

Paul Krenzer, Hamm-Pelkum; Franz-Josef Peters; Karl-Heinz Schlusnus, both of Hamm, and Hans J. Wahl, Münster, all of Fed. Rep. of Germany, assignors to Hoesch Werke Aktiengesellschaft, Dortmund, Fed. Rep. of Germany

Continuation-in-part of Ser. No. 840,834, Oct. 11, 1977. This application May 2, 1979, Ser. No. 35,329

Claims priority, application Fed. Rep. of Germany, Oct. 16, 1976, 2646838

Int. Cl.³ B23K *9/12*

U.S. Cl. 219—124.34 11 Claims

1. A method for automatically tracking systems to the center of weld gaps, weld joints or weld reinforcements comprising the steps of: using at least one scanning probe for receiving signals reflected by a workpiece surface as long as said surface is substantially parallel to an acting surface of said probe, said signals breakdown spontaneously when the surface clearly deviates from the parallel as in the case with left and right flanks of gaps, joints or reinforcements; said signal breakdown being a decrease in intensity of a reflection signal to a fraction

of previous reflection energy; applying the breakdown of the signal for storing an electrical value corresponding to the instantaneous probe position, the probe position for the left flank when traveling from left to right and for the right flank when traveling from right to left; computing as a computed value the center of the gap, of the joint or of the reinforcement

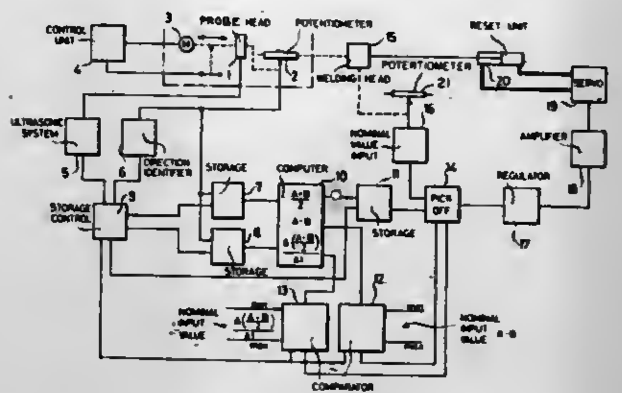

from the stored electronic position values; comparing the computed value with an electrical value corresponding to the center position of the system; and forming a control command signal from a difference of compared values for actuating drive means to return said system to the computed center of the weld gap, said signals being evaluated only up to their first reflection breakdown per probe oscillation direction.

4,298,786

THIN FILM THERMAL PRINT HEAD

Edmund T. Marciniec, Libertyville, Ill., assignor to Extel Corp., Northbrook, Ill.

Continuation-in-part of Ser. No. 918,845, Jun. 26, 1978, Pat. No. 4,206,541. This application Oct. 1, 1979, Ser. No. 81,003

Int. Cl.³ H05B *3/16*

U.S. Cl. 219—216 5 Claims

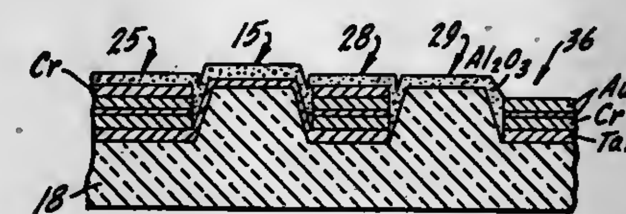

1. A thin-film dot matrix thermal print head comprising:

a dielectric substrate having a print head surface;

a film of high-resistance conductive material, formed in accordance with a predetermined pattern having intervening blank spaces, on the print head surface of the substrate;

a series of electrical connectors, each formed as a plurality of superimposed electrically conductive films covering predetermined portions of the high-resistance film, at least one of those films being of low-resistance material, a plurality of individual portions of the high-resistance film being left uncovered by the electrical connector films to define an array of resistance heater print elements;

the print head surface of the dielectric being depressed, in all areas covered by the electrical connectors to a depth approximately equal to or greater than the sum of the thicknesses of all of the superimposed films in such areas so that the print elements and the blank spaces are effectively elevated to at least approximately the level of the outermost surface of the electrical connectors, so that the connectors are effectively protected by both the print elements and blank spaces, and there are no depressions for accumulation of deposits of lint, ink, or the like.

4,298,787

APPARATUS FOR HEATING AND SETTING HAIR

George Barradas, Greenwich, Conn., assignor to Appliance Design Probe Inc., Scarborough, Canada

Filed Jan. 17, 1980, Ser. No. 108,649

Int. Cl.³ H05B *1/00*; A45D *4/12*

U.S. Cl. 219—222 10 Claims

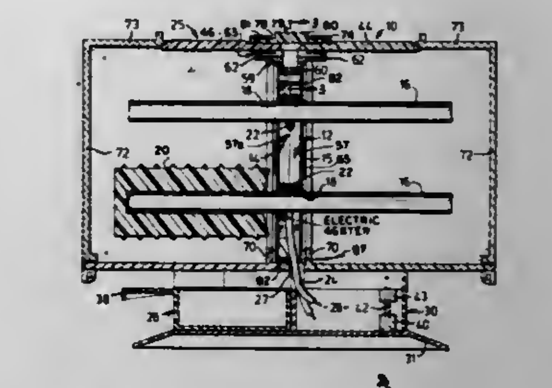

1. A compact apparatus for heating and setting hair, comprising:

a central wall defined by two spaced-apart panels,

a plurality of heat-conductive elongated members, each passing through a separate pair of aligned apertures in said panels, and the free ends of each member extending away from the central wall in two opposing directions,

a plurality of hair-curling cylinders each having a central axial passageway adapted to receive an end of one of said elongated members,

a flexible rope-like heating element between the two spaced-apart panels and wound around each of the elongated members,

wire means connected with said heating element, by which electrical energy can be conveyed to the heating element from an external source,

said housing means enclosing the central wall, the elongate members, the heating element, and the cylinders when engaged with the elongated members.

4,298,788

TOY OVEN ASSEMBLY

Lawrence T. Jones, Playa Del Rey; Anson Sims, Granada Hills; Ashley G. Howden; Mark S. Knighton, both of Los Angeles, and LC James Kingsbury, Fountain Valley, all of Calif., assignors to California R & D Center, Culver City, Calif.

Filed Jan. 25, 1980, Ser. No. 115,380

Int. Cl.³ H05B *1/00*

U.S. Cl. 219—386 10 Claims

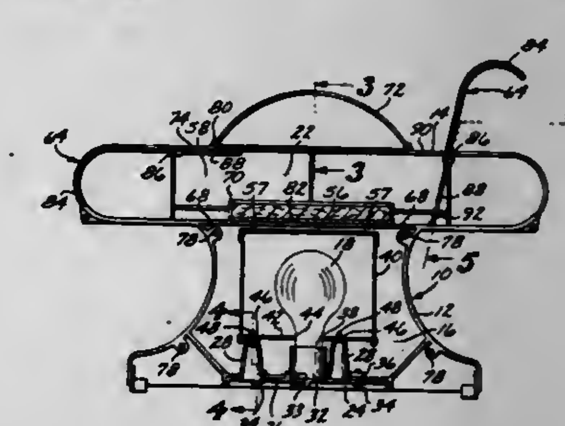

1. A toy oven assembly comprising:

a base member incorporating a heating element;

a substantially horizontally disposed cover member connected to the base member, the cover member incorporating a channel passing from a first end of the cover member to a second end of the cover member, the channel including space located directly above the heating element and

comprising a heating chamber, the channel being adapted for accommodating a tray which may be pushed through the channel and may be allowed to dwell in the heating chamber; the cover member further including on a top substantially horizontally disposed surface thereof a substantially circular aperture surrounded by a rim;

a substantially hemispherical dome comprising one of a transparent and a translucent material which is disposed directly above the heating chamber,

a lower edge of the dome being held by the rim, and

at least a first substantially J shaped access door mounted in the cover member, the access door selectively blocking or opening entry to the channel at the option of a player, the access door includes a front curved portion, an intermediate portion and an end portion, the access door is pivotably mounted to the cover member, the end portion of the access door including a notch adapted for allowing entry of the tray into the channel when the access door is in a position selectively allowing entry into the channel, the notch being sufficiently small so as to prevent entry of a child's hand or fingers into the channel.

4,298,789

OVEN HAVING A CAVITY HEATED BY AT LEAST ONE MONOLITHIC INTEGRATED HEAT SOURCE

Charles W. Eichelberger; Charles E. Thomas, both of Schenectady, and Robert J. Wojnarowski, Clifton Park, all of N.Y., assignors to General Electric Company, Schenectady, N.Y.

Filed Mar. 24, 1980, Ser. No. 132,812

Int. Cl.³ F27D *11/02;* A21B *1/00*

U.S. Cl. 219—406 **24 Claims**

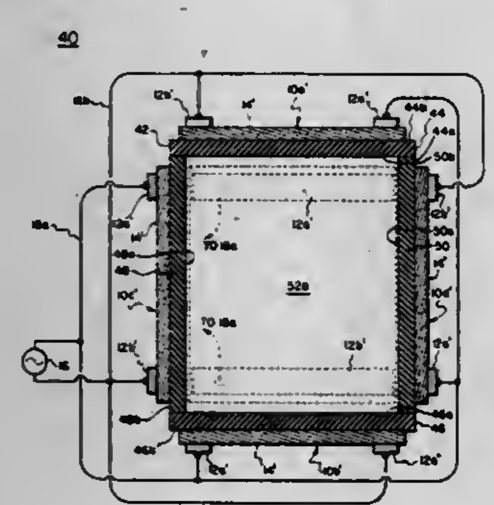

1. An oven having an oven cavity heated by conversion of electrical energy into heat energy, comprising:

a substrate fabricated of an electrically insulative and thermally conductive material and with a geometric shape enclosing said oven cavity to be heated, said substrate having a first surface forming the exterior surface of said cavity and a second surface forming an interior surface of said cavity and from which heat energy enters said cavity after conduction through said substrate;

a plurality of spaced-apart electrically conductive members positioned adjacent to said substrate first surface;

a sheet of material directly secured between, and in electrical contact with, said plurality of conductive members and secured to at least a portion of said substrate first surface;

at least one additional plurality of spaced-apart electrically conductive members positioned adjacent to said substrate first surface at a location remote from said plurality of conductive members;

at least one additional sheet of material, each secured to other portions of said substrate first surface different from the portion of said substrate first surface to which said sheet of material is secured, each of said at least one additional sheet directly secured and electrically connected between at least an associated pair of the at least one additional plurality of conductive members;

the material of said sheet and said at least one additional sheet having a predetermined electrical resistance measurable between different ones of said conductive and additional conductive members;

the resistance of said material of said sheet and of said at least one additional sheet of material causing conversion of electrical energy, coupled into said sheet and said at least one additional sheet via associated ones of the total number of said conductive members, into heat energy for energy transfer through said substrate and from said substrate second surface into said cavity; and

means for connecting a source of electrical energy to predetermined ones of the total number of conductive members to cause electrical energy to be converted to heat energy in associated predetermined ones of the sheet and the at least one additional sheet fabricated upon said substrate first surface.

4,298,790

METHOD OF AND APPARATUS FOR DETERMINING NUMBER OF SHEETS IN A STACK

Forrest W. Decker, and Jacob R. Peternel, both of Pittsburgh, Pa., assignors to PPG Industries, Inc., Pittsburgh, Pa.

Continuation of Ser. No. 891,364, Mar. 29, 1978, abandoned. This application Oct. 22, 1979, Ser. No. 87,184

Int. Cl.³ G06M *9/00*

U.S. Cl. 235—92 SB **15 Claims**

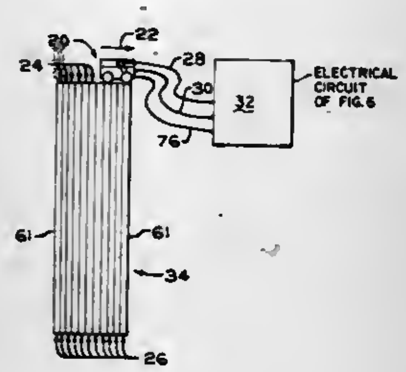

1. An apparatus for determining number of sheets in a stack, each sheet having an energy reflective side and stacked to provide the stack with an energy reflective side, comprising:

means for directing energy rays toward the reflective side of the stack to reflect energy rays therefrom;

means for generating a reflective energy density signal from the reflective energy rays as a function of pulse counts corresponding to position energy rays are reflected from the reflective side of the stack;

means for measuring nominal thickness of the sheets to be stacked;

means for determining (1) calculated sheet pulse counts from the density signal and pulse counts; (2) a working pulse range from the nominal thickness; and (3) a plurality of pulse values within the working pulse range;

means acting on the calculated sheet pulse counts and pulse values for determining a pair of sheet counts for each pulse value;

means for energizing said generating, measuring and determining means for initial determination of pair of sheet counts for each pulse value and subsequent determination of pair of sheet counts for each pulse value when the number of consecutive pairs of equal sheet counts is less than a predetermined number; and

means acted on by said energizing means when the number of consecutive pairs of equal pair of equal sheet counts is more than the predetermined number to provide acceptable pair of sheet counts for recording sheet count which is the sheet count of one of the pair of sheet counts included in the acceptable pair of sheet counts.

4,298,791

SCANNING DEVICE FOR PRESELECTOR COUNTER MECHANISM

Helmuth Müller, St. Georgen, and Lother Herrmann, Hornberg, both of Fed. Rep. of Germany, assignors to Kienzle Apparate GmbH, Villingen, Fed. Rep. of Germany

Filed Aug. 29, 1980, Ser. No. 182,805

Claims priority, application Fed. Rep. of Germany, Sep. 22, 1979, 2938410

Int. Cl.³ G06F *15/18*

U.S. Cl. 235—132 R **7 Claims**

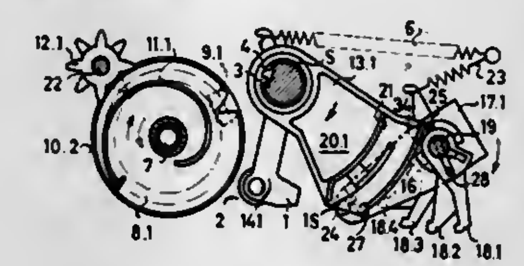

1. Apparatus for scanning the relative position of a preselector counter mechanism including a plurality of digital discs having radial cams which are rotated in accordance with the setting of preselected numerical values on said counter, each of said radial cams being provided with a scanning arm adapted to initiate a switching operation upon reaching a preselected state of said counter mechanism, said apparatus comprising a plurality of counter wheels each adapted to be set to a preselected value, an analogue metering value cam affixed to each of said counter wheels, each of said counter wheels and metering value cams being arranged to represent a decade of a decimal system numerical value, indexing pinion means gearing each of said counter wheel and metering value cam with those representing a next adjacent decade, multiarmed spring actuated swivel levers for scanning said metering value cams by decades and in sequence after release from a ready position from a higher decade to a next lower decade, and a switching shaft having stepped levers thereon interacting with said swivel levers, said swivel levers having an extension operating as a scanning arm scanning said metering value cams and another extension arm provided with functional plateaus for effecting release by decades of said swivel lever into the scanning position, said another extension arm operating to release said stepped levers for effecting a stepped control function of said switching shaft.

4,298,792

LOCKING APPARATUS FOR PREVENTING UNAUTHORIZED ACCESS

Carl Granholm, Hastings on Hudson, N.Y., and Rudi Faude, Balingen, Fed. Rep. of Germany, assignors to BSG-Schalttechnik GmbH & Co., K.G., Balingen, Fed. Rep. of Germany

Continuation-in-part of Ser. No. 952,516, Oct. 18, 1978, Pat. No. 4,237,375. This application Nov. 22, 1978, Ser. No. 963,054

Claims priority, application Fed. Rep. of Germany, Nov. 22, 1977, 2752106; Oct. 5, 1978, 2843359

Int. Cl.³ G06F *15/20;* B60R *25/00;* G06K *19/06, 7/016*

U.S. Cl. 235—375 **30 Claims**

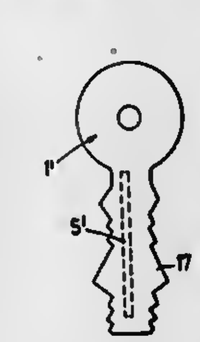

1. In an apparatus for actuating a locking device, a security device and the like, said apparatus including an actuator element containing information related to the authorized actuation of said locking device and the like, and further including receiver means for receiving said actuator element and containing guide means for guiding said actuator element along a predetermined longitudinal path and information retrieving means for retrieving said information presented to said retrieving means during movement of the actuator element along said longitudinal path, said apparatus further comprising means to process the information retrieved from said actuator element, the improvement wherein:

said actuator element is a key provided with two longitudinal tracks of coded data, each of which is composed of a sequence of uniformly spaced, different indicia, said data being carried in a non-mechanical manner, said two tracks containing the information to be processed by said apparatus and at the said time constituting a clock track for the apparatus, the code tracks being so disposed that for each data step, one or the other of the bits in said code tracks will change, the change thereof constituting the occurrence of a logical state (1) for bit changes in one of the tracks and a logical state (0) for a bit change in the other track, whereby the occurrence of bit changes in one or the other tracks is interpreted as a sequence of logical states constituting a clock sequence;

each of said coded tracks is associated with a reading assembly (**121*a*, 121*b***) whose output signals are fed to detectors (**129**) for detecting changes in the output signals of said reading assemblies and generating output signals that are combined in a gate circuit (**131**) and constitute the shifting cycle for the shift input of a shift register (**134, 134'**);

the output signals of the detectors (**129**) are provided to switching inputs of a storage circuit (**135**) whose output is connected to the data input (**137**) of the shift register (**134**), whereby the bit pattern which corresponds to the clock sequence generated by the bit pattern itself is received in the shift register (**134, 134'**); and

a coincidence circuit (**144**) determines the coincidence of the contents of the shift register (**134**) and the contents of a memory holding predetermined shift clock cycle and data information.

4,298,793

PORTABLE ELEMENT FOR RECEIVING, STORING, DISPLAYING AND OUTPUTTING DIGITAL DATA, AND A RESERVATION DEVICE FOR USE IN A RESERVATION SYSTEM

Johannes H. A. M. Melis, and Willem Le Mair, both of Eindhoven, Netherlands, assignors to U.S. Philips Corporation, New York, N.Y.

Filed Feb. 9, 1979, Ser. No. 10,879

Claims priority, application Netherlands, Feb. 27, 1978, 7802132

Int. Cl.³ G06K *19/06, 19/02;* G09F *9/30;* G06F *15/02*

U.S. Cl. 235—487 **16 Claims**

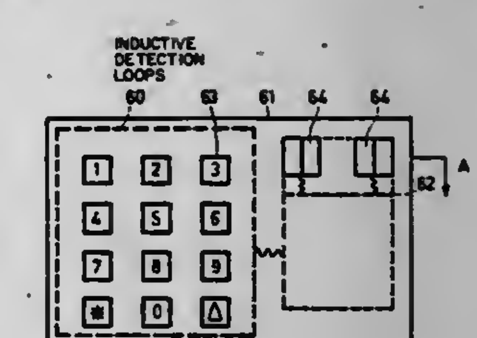

1. A portable element for receiving, storing, displaying and outputting digital data, said portable element having data input, a memory having an at least partly modifiable content, a display device for the persistent display of digital data in the form of characters on the basis of data received on the data input, and a data output, for use in a reservation system having

at least one locally present reservation device and at least one service facility which is not locally present, characterized in that:

means to couple said data input and data output for coupling to an access device of the reservation device and for then receiving a proximity signal from the reservation device;

means to transmit, co-controlled by said proximity signal, identification data stored in said memory and a reservation request concerning the service facility to the reservation device in order to grant the reservation request;

means to unblock said system by a verification signal generated by said identification data after examination thereof in the reservation device;

said display device having means to display, under the control of the content of the memory modified by a signal of availability data from the reservation device, reservation data concerning a reservation of a service facility, the availability data in the reservation device being adapted at the same time.

4,298,794

FIBER OPTIC HOT SPOT DETECTOR

Elias Saitzer, West Hartford, and Gerald Meltz, Avon, both of Conn., assignors to United Technologies Corporation, Hartford, Conn.

Continuation-in-part of Ser. No. 71,511, Aug. 30, 1979, abandoned. This application Jun. 23, 1980, Ser. No. 162,285

Int. Cl.^{3} G02B *5/14*

U.S. Cl. 250—227 **9 Claims**

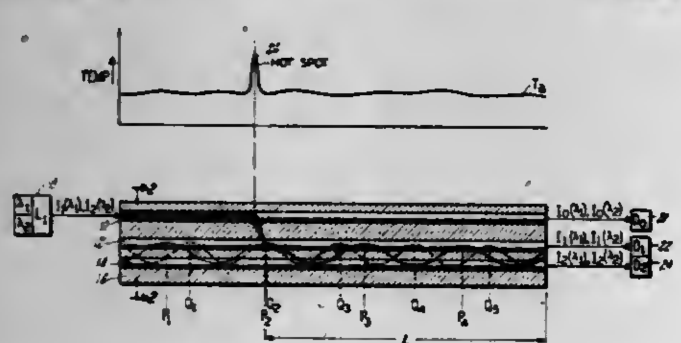

1. A hot spot detector, comprising:

means including an optical fiber having an input core and at least two secondary cores in a common cladding, said secondary cores being shaped and positioned to allow cross-talk therebetween, said input core and each of said secondary cores and said cladding being dimensioned and fabricated from such materials so as to support only the lowest order mode;

source means for presenting light of a predetermined wavelength for coupling into said input core;

detector means for receiving light of a predetermined wavelength emerging from said secondary cores; and

whereby if the temperature at any point along the length of said optical fiber exceeds a preselected value, light propagating along said input core cross-talks to said secondary core at such point, and the location of point along said optical fiber is related to the intensity of light emerging from said secondary cores.

4,298,795

METHOD AND APPARATUS FOR INTRODUCING SAMPLES TO A MASS SPECTROMETER

Tsugio Takeuchi; Shin Tsuge, both of Nagoya; Yukio Hirata, Toyohashi, and Koichi Mochizuki, Tsushima, all of Japan, assignors to Japan Spectroscopic Co. Ltd, Tokyo, Japan

Filed May 11, 1979, Ser. No. 38,264

Claims priority, application Japan, Sep. 8, 1978, 53-111130

Int. Cl.^{3} B01D *59/44*

U.S. Cl. 250—282 **19 Claims**

1. A method for continuously introducing a large molecular weight compound in vapor and fine particle form to an ion source of a mass spectrometer which comprises:

supplying a nebulizing gas to a nebulizing means;

spurting said nebulizing gas from a nozzle portion of said nebulizing means while continuously introducing a liquid solution of said compound to said nozzle portion whereby

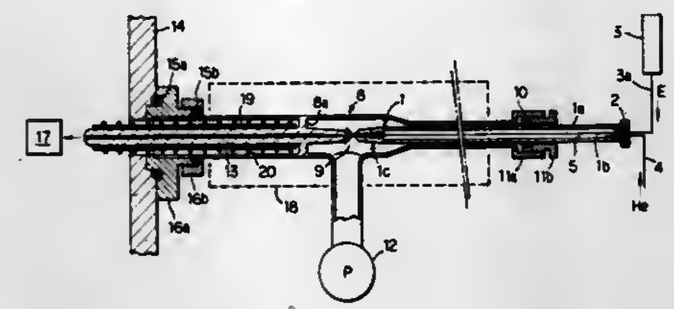

a portion of said liquid solution is nebulized into finely divided particles by a jet stream of said nebulizing gas spurted from said nozzle portion and another portion of said liquid sample is vaporized; and

introducing the nebulized liquid solution to an ionizing portion of said mass spectrometer.

4,298,796

METHOD OF, AND APPARATUS FOR, MONITORING RADIOACTIVITY

Gerald T. Warner, Pullen's Field, Headington, Oxford, and Colin G. Potter, Ivy Cottage, Lower End, Leafield, Oxfordshire, both of England

Continuation of Ser. No. 835,038, Sep. 20, 1977. This application Jun. 22, 1979, Ser. No. 51,231

Claims priority, application United Kingdom, Sep. 24, 1976, 39853/76

Int. Cl.^{3} G01T *1/00, 1/20*

U.S. Cl. 250—328 **14 Claims**

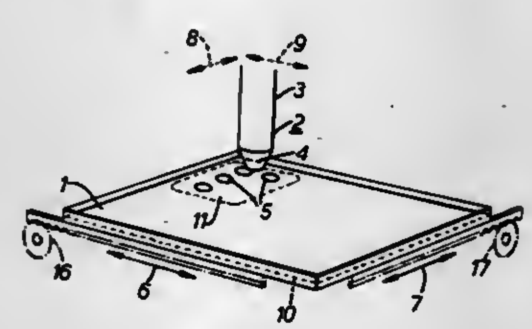

1. Method of monitoring the beta emissions of a plurality of samples of radioactive materials, comprising the steps of:

depositing said plurality of samples on a single support layer in a plurality of discrete areas disposed in a predetermined pattern;

confining a single body of liquid scintillant in proximity to the surface region of said support layer where said plurality of samples are deposited as a whole to convert said beta emissions into light emissions, and;

scanning the surface region of said support layer in a plurality of discontinuous steps to provide a plurality of output signals, each of which corresponds to at least a proportion of the light emissions activated by a respective one of said samples.

4,298,797

SPECTROGRAPH USABLE IN PARTICULAR IN THE FAR ULTRAVIOLET

Claude R. Bernard, Longjumeau; Bernard Daigne, Chatillon, and Francois Girard, Paris, all of France, assignors to Office National d'Etudes et de Recherches Aerospatiales, France

Filed Feb. 9, 1979, Ser. No. 10,820

Claims priority, application France, Feb. 15, 1978, 78 04317

Int. Cl.^{3} G01J *1/42, 3/28*

U.S. Cl. 250—372 **5 Claims**

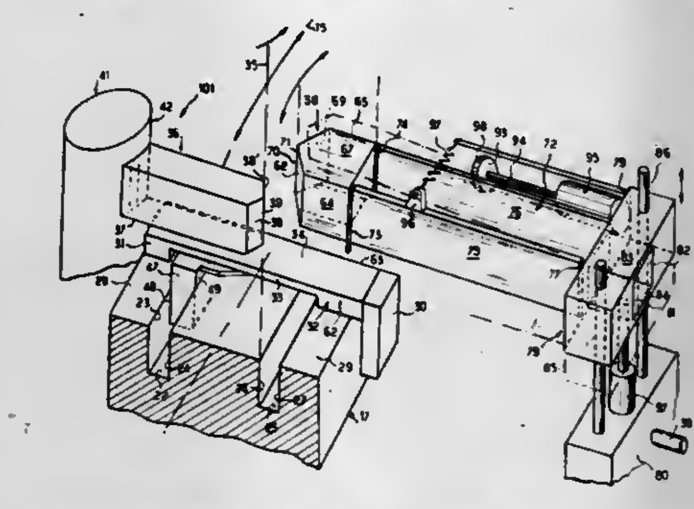

1. A spectrography apparatus of the Rowland type usable in the far UV range, comprising:

a diffraction grating located on a point of the Rowland circle;

a rail along a portion of the Rowland circle;

at least one UV detector means, a support slidably mounting the detector means on said rail;

an orienting means capable of linking said grating and said detector means for directing the latter towards the diffraction grating, said orienting means including a telescopic arm having an end close to said detector means, said end including a coupling means capable of coupling with said support;

said coupling means being constituted by a cap which can be displaced downwardly in order to nest on said support and orient it towards the diffraction grating.

4,298,798

METHOD AND APPARATUS FOR PRODUCING NEGATIVE IONS

Fred N. Huffman, Sudbury, Mass., assignor to Thermo Electron Corporation, Waltham, Mass.

Filed Nov. 29, 1979, Ser. No. 98,423

Int. Cl.^{3} H01J *27/00*

U.S. Cl. 250—423 R **8 Claims**

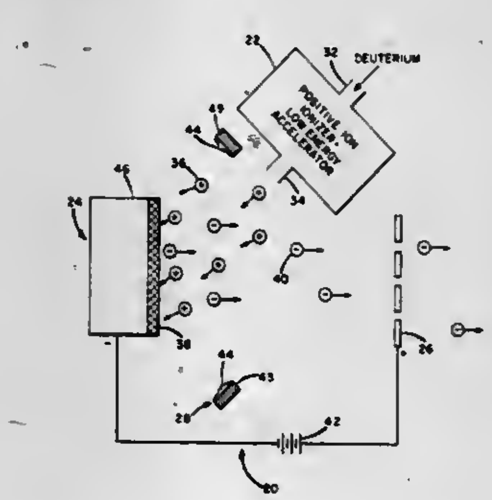

1. Apparatus for producing negative ions comprising:

an ionization electrode comprising a substrate and a surface layer formed by the deposition on said substrate of products of thermal decomposition of cesium carbonate;

means for supplying positive ions and for directing said positive ions to impinge upon the surface layer of said ionization electrode with a selected level of bombardment energy;

extraction means for accelerating negative ions released from said surface layer following impingement of said positive ions on said layer; and

means for replenishing the surface layer of said electrode with the products of decomposition of cesium carbonate.

4,298,799

RADIOGRAPHY

Colin C. Oliver, Langley, England, assignor to EMI Limited, Hayes, England

Division of Ser. No. 772,689, Feb. 28, 1977. This application Apr. 19, 1978, Ser. No. 897,789

Claims priority, application United Kingdom, Mar. 3, 1976, 8417/76

Int. Cl.^{3} G03B *41/16*

U.S. Cl. 250—445 T **9 Claims**

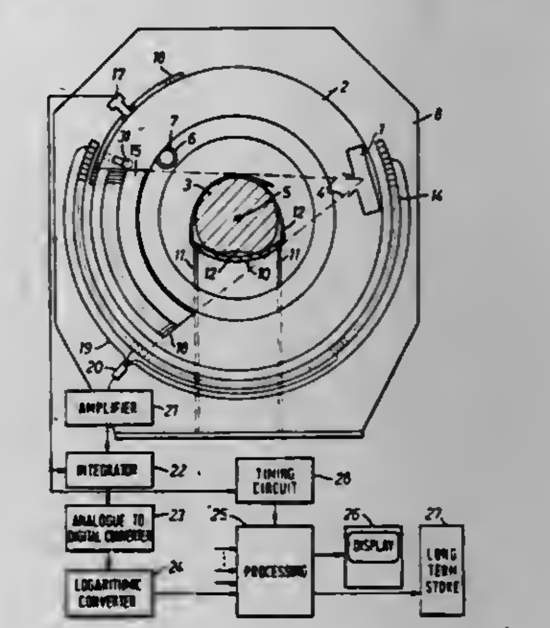

1. Radiographic apparatus, for examining a body, including a least one x-ray tube projecting a fan-shaped distribution of x-rays through a slice of the body, means for angularly moving the at least one x-ray tube relative to the body about an axis intersecting the slice to cause the x-ray tube to project radiation through the body from a plurality of different directions, and a plurality of detector devices disposed along a curved path around the body, to an extent which subtends at the axis an angle substantially equal to or greater than 180° and fixed so as to be substantially prevented from angular movement around the body, in the direction of motion of the source, wherein the means for moving moves the said at least one x-ray tube to an extent sufficient to irradiate each of the detector devices, and including collimators moving angularly around the body together with the x-ray tube relative to the fixed detectors to reduce the incidence on the detectors of radiation transmitted through the body along indirect paths.

4,298,800

TOMOGRAPHIC APPARATUS AND METHOD FOR OBTAINING THREE-DIMENSIONAL INFORMATION BY RADIATION SCANNING

Arnold Goldman, Houston, Tex., assignor to Computome Corporation, Houston, Tex.

Continuation-in-part of Ser. No. 881,549, Feb. 27, 1978, abandoned, which is a continuation of Ser. No. 664,910, Mar. 8, 1976, abandoned. This application Jan. 23, 1979, Ser. No. 5,687

Int. Cl.^{3} G01N *23/00*

U.S. Cl. 250—445 T **15 Claims**

1. A tomographic apparatus for examining a body by means of radiation such as x-ray or gamma radiation comprising:

(a) a body supporting structure for positioning a body relative to a rotatable source of radiation and relative to a detector,
(b) a source of penetrating radiation rotatable with respect to said body supporting structure and positioned on one side thereof,
(c) a radiation detector system located on the opposite side of said body supporting structure, rotatable or fixed, with respect thereto but fixed relative to said radiation source, which detection system comprises:
(I) means for receiving and converting radiation received from said radiation source into light photons, wherein said means for receiving and converting radiation is a fluoroscopic screen, or is a scintillation crystal, and said screen or crystal is inclined at an angle with respect to the axis of the beam generated by said source, thereby yielding a greater light photon output,

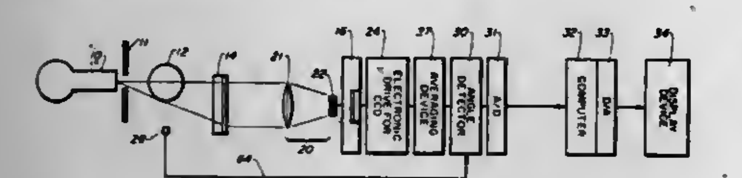

(II) an optical lens system aligned with said radiation converting means for focusing the light photons passing therethrough onto at least one charge coupled device.
(III) at least one electronic charge coupled semiconductor device for receiving light photons and generating analog electric signals in response to the light photons received;
(d) an analog-to-digital converter for converting the analog signals generated by said semiconductor device into digital signals,
(e) means for processing said digital signals and means for reconverting said processed digital signals into an analog signal and displaying the thus obtained information, and
(f) means for rotating said radiation source and said radiation receiving means relative to said body supporting structure but fixed relative to each other.

4,298,801
L-U ARM HANDLE ASSEMBLY
Christopher J. Heitman, and Gregory D. Schwehr, both of Milwaukee, Wis., assignors to General Electric Company, Milwaukee, Wis.
Filed Jan. 17, 1980, Ser. No. 112,866
Int. Cl.^{3} A61B *6/04*
U.S. Cl. 250—447 **29 Claims**

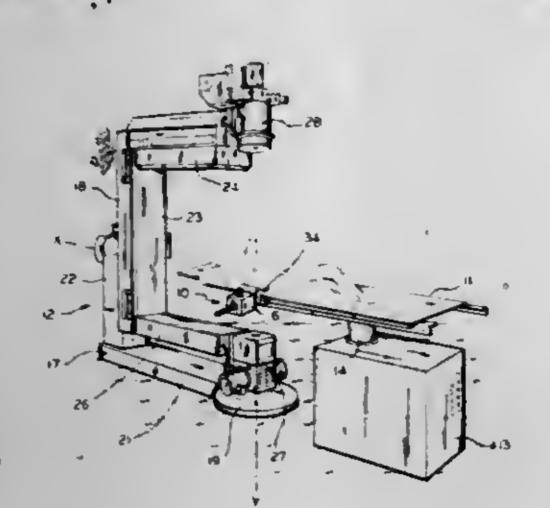

1. An improved position control system for a medical diagnostic imaging apparatus of the type having an L-shaped support element rotatably disposed on a vertical axis, a U-shaped support element rotatably supported on a horizontal axis at the upper end of the L-shaped support element, and individual rotation systems for independently rotating the respective support elements on their axes, wherein the improvement comprises:

a control box which houses portions of the individual rotation systems, said box having an aperture formed therein;
a control handle for extending into said aperture to form a mechanical connection to the individual rotation systems; and
means for operating said control handle with a single hand of an operator to selectively actuate at least one of said rotation systems.

4,298,802
METHOD AND DEVICE FOR COLLECTING LIGHT UTILIZING A LIGHT TRAP
Ferdinand Quella, and Heinz Pape, both of Munich, Fed. Rep. of Germany, assignors to Siemens Aktiengesellschaft, Berlin & Munich, Fed. Rep. of Germany
Filed Feb. 28, 1980, Ser. No. 125,496
Claims priority, application Fed. Rep. of Germany, Mar. 6, 1979, 2908770
Int. Cl.^{3} H05B *33/00*; G01J *1/58*
U.S. Cl. 250—484 **28 Claims**

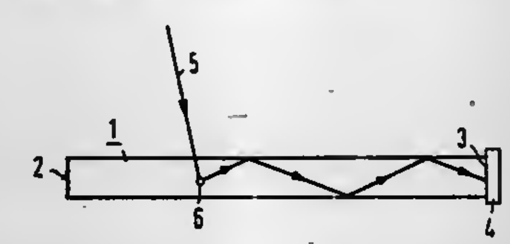

1. In a method for collecting light and displaying images, said method comprising providing a display with a body functioning as a light trap, said body containing fluorescent particles having an absorption range amd emitting light in an emission range, said body having at least one light decoupling window aligned with a light valve of the display, said method including absorbing light waves in the absorption range of the particles and emitting light in the emission range, the improvements comprising providing second fluorescent particles having an absorption range and an emission range different than the ranges of said first mentioned particles, and absorbing light in both ranges and emitting light in said two emission ranges.

4,298,803
PROCESS AND APPARATUS FOR MAKING FINE-SCALE PATTERNS
Shizuya Matsuura, Nara, and Fumiya Konishi, Toyonaka, both of Japan, assignors to Matsushita Electric Industrial Co., Ltd., Osaku, Japan
Filed Jan. 16, 1980, Ser. No. 112,464
Claims priority, application Japan, Jan. 19, 1979, 54-5092
Int. Cl.^{3} H01J *37/06*
U.S. Cl. 250—492.2 **17 Claims**

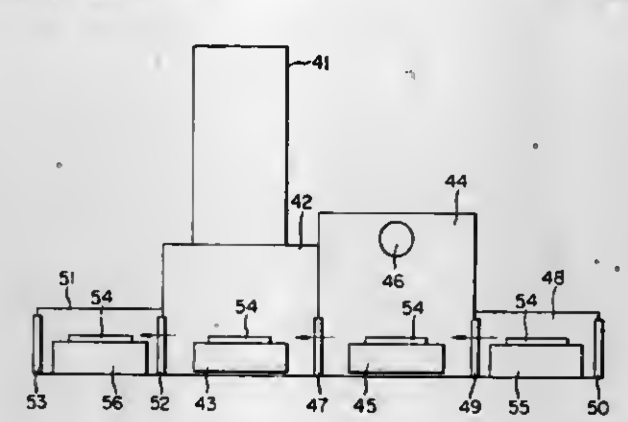

1. In a process for making fine-scale patterns of a resist by projecting a radiation pattern on a resist film disposed on a substrate, said film having a predetermined sensitivity threshold level to said radiation such that a radiaton intensity below said sensitivity threshold level does not sensitize the film, the improvement comprising the steps of:
projecting said radiation pattern on said resist film at a first intensity; and thereafter substantially uniformly exposing a desired area of said resist film to radiation at a second intensity less than said sensitivity threshold level,
the sum of said first and second intensities being greater than said sensitivity threshold level.

4,298,804
NEUTRON GENERATOR HAVING A TARGET
Johannes K. E. Colditz, Eindhoven, Netherlands, assignor to U.S. Philips Corporation, New York, N.Y.
Filed Oct. 9, 1979, Ser. No. 83,011
Claims priority, application Netherlands, Oct. 13, 1978, 7810299
Int. Cl.^{3} G21G *4/02*
U.S. Cl. 376—108 **9 Claims**

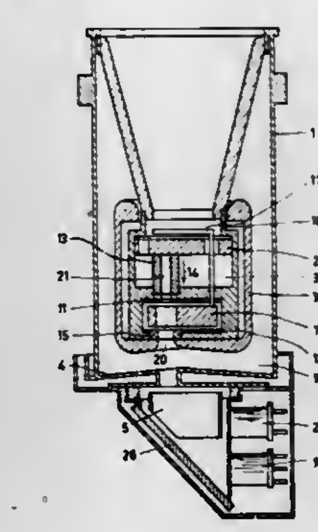

1. In a neutron generator target to be hit by a beam of hydrogen ions, said target including (a) an outer layer of a metal having a large coefficient of absorption for hydrogen, (b) a carrier layer of a metal having small coefficients of absorption and diffusion for hydrogen and a large coefficient of thermal conductivity, and (c) a first intermediate layer of a metal having a large coefficient of thermal conductivity and a low sputtering ratio, said first intermediate layer being between said outer and carrier layers,
the improvement in combination therewith of a second intermediate layer between said carrier and first intermediate layers, comprising a metal having a coefficient of linear expansion of a magnitude which is between that of the coefficients of linear expansion of said carrier and first intermediate layers, said outer, first intermediate, second intermediate and carrier layers being adhered together.

4,298,805
REGULATOR FOR A PULSED NEUTRON SOURCE
Charles L. Dennis, Dallas, Tex., assignor to Mobil Oil Corporation, New York, N.Y.
Filed Mar. 27, 1980, Ser. No. 134,376
Int. Cl.^{3} G21G *4/02*
U.S. Cl. 376—111 **5 Claims**

1. In a pulsed neutron system including an accelerator tube having a target, an ionization section, and a replenisher for supplying accelerator gas which is ionized by repetitive pulses applied to said ionization section, a method of adjusting the power supplied to the replenisher to control the pressure of the accelerator gas within said tube, comprising the steps of:
(a) monitoring the current through said ionization section and detecting current events occurring during said ionization pulses,
(b) increasing the power supplied to said replenisher in response to a decrease in the frequency of said incremental current events to increase the amount of accelerator gas supplied by the replenisher thereby increasing said accelerator gas pressure, and
(c) decreasing the power supplied to said replenisher in

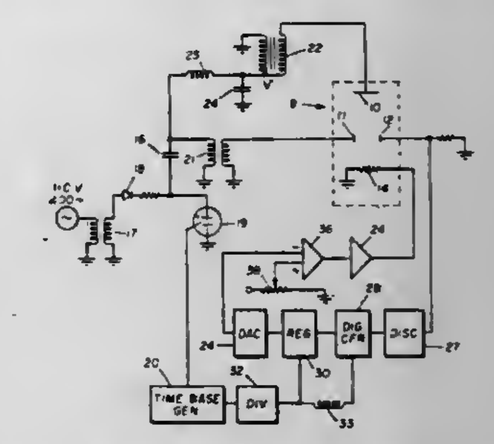

response to an increase in the frequency of said current events to decrease the amount of accelerator gas supplied by said replenisher thereby decreasing said accelerator gas pressure.

4,298,806
APPARATUS FOR IRRADIATING SUBSTANCES CURABLE BY RADIATION
Wolf-Dietrich Herold, Hechendorf, Fed. Rep. of Germany, assignor to ESPE Fabrik pharmazeutischer Praparate GmbH, Seefeld, Fed. Rep. of Germany
Filed Jan. 8, 1979, Ser. No. 1,590
Claims priority, application Austria, Jan. 23, 1978, 451/78
Int. Cl.^{3} G01J *1/00*
U.S. Cl. 250—504 H **16 Claims**

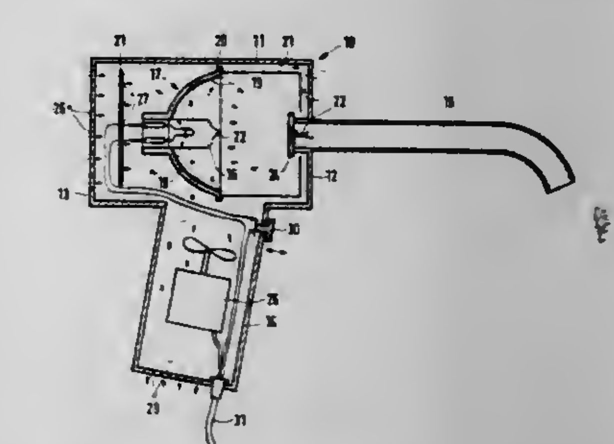

1. An apparatus for irradiating substances curable by radiation of a spectral range selected from the UVA and near-UVA visible wave length ranges, comprising,
(a) a lamp for emitting a radiation including said selected spectral range;
(b) a selective reflector which reflects radiation of said selected spectral range and transmits radiation outside thereof, the reflector partially surrounding said lamp so as to converge the reflected radiation to a focus located outside said lamp at the side remote from said reflector; and
(c) an optical wave guide having an input end at said focus for guiding said reflected radiation to said substances.

4,298,807
PROCESS FOR INSPECTING THE PHYSICAL STATE OF A PRINTED DOCUMENT AND AN INSTALLATION FOR PUTTING THE PROCESS INTO OPERATION
Nicolas Favre, Cornaux, Switzerland, assignor to Compagnie Industrielle Radioelectrique, Switzerland
Filed Nov. 27, 1979, Ser. No. 98,332
Claims priority, application Switzerland, Dec. 1, 1978, 12290/78
Int. Cl.³ G01N *21/88*
U.S. Cl. 250—562 5 Claims

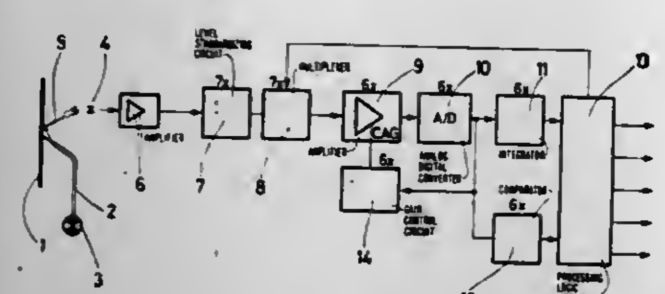

1. A process for inspecting the physical state of a printed document wherein the document is caused to pass in front of a source of light and the light reflected is collected by means of photoelectric elements and compared with a reference value, characterised in that the document to be inspected is made to pass laterally with respect to a row of photoelectric elements, the signals delivered simultaneously by the row of photoelectric elements are successively transmitted by multiplexing, the analog signals delivered by the photoelectric elements are converted into digital signals, the digital signals are averaged in order to determine the general state of dirtiness of the document, the number of photoelectric elements of the row which are covered by the document are counted in order to determine the width of the document and to detect the presence of dog ears, the number of photoelectric elements delivering a signal which exceeds a certain level are counted to detect abnormal reflections, and each digital signal corresponding to a point of the document is compared with a reference value in order to determine the presence of a hole, a stain or a similar condition.

4,298,808
DEFECT DETECTION
Walter J. Hill, New Barnet, England, assignor to British Steel Corporation, London, England
Continuation of Ser. No. 794,068, Jul. 20, 1978. This application Jan. 8, 1979, Ser. No. 1,830
Claims priority, application United Kingdom, May 10, 1976, 19179/76
Int. Cl.³ G01N *21/88*
U.S. Cl. 250—563 18 Claims

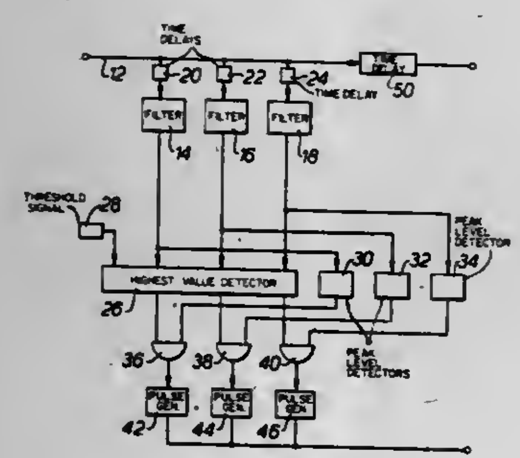

1. A method for indicating a defect in a workpiece, the method comprising applying a continuously variable signal derived from inspection of the workpiece and including a pulse component representative of the defect to a bank of filters having different frequency transmission characteristics respectively representative of defects of different type so that the filter corresponding most closely to the defect inspected, produces a relatively greater output and provides an indication of defect type.

4,298,809
GATE CIRCUIT FOR GATE TURN-OFF THYRISTOR
Kenichi Onda, and Hisao Amano, both of Hitachi, Japan, assignors to Hitachi, Ltd., Tokyo, Japan
Filed Sep. 24, 1979, Ser. No. 78,470
Claims priority, application Japan, Sep. 26, 1978, 53-118970
Int. Cl.³ H03K *17/72*
U.S. Cl. 307—252 C 3 Claims

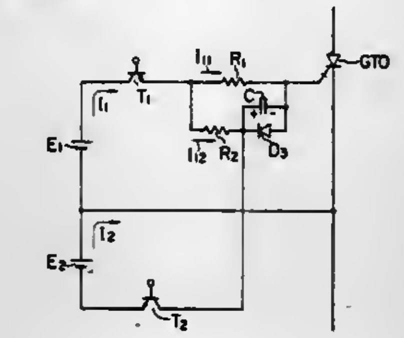

1. A gate circuit for a GTO thyristor comprising:
a first series connection of a first DC power source and a first switching element connected between the gate and cathode electrodes of said GTO thyristor for supplying a gate turn-on current to said GTO thyristor;
a capacitor being charged by said first series connection; and
a second series connection of a second DC power source and a second switching element connected in series with said capacitor between the gate and cathode electrodes of said GTO thyristor for supplying a gate turn-off current to said GTO thyristor.

4,298,810
SEMICONDUCTOR DEVICE CONDUCTION STATE DETECTION CIRCUIT
Edward H. Dinger, Waynesboro, and Allen M. Ritter, Rocky Mount, both of Va., assignors to General Electric Company, Salem, Va.
Filed Jan. 14, 1980, Ser. No. 111,790
Int. Cl.³ H03K *17/72*; G01R *31/26*
U.S. Cl. 307—252 N 10 Claims

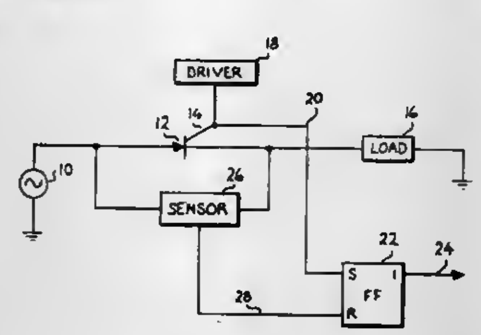

1. A conduction state detection circuit for use with a thyristor responsive to an applied forward bias voltage and a gating signal to enter the conductive state comprising:
(a) bistable memory means responsive to first and second input signals to generate an output signal having a state indicative of the conductive state of said thyristor;
(b) means for supplying the gating signal for said thyristor to said memory means as said first input signal whereby said memory means is placed in a first of its bistable states and said output signal is of a first state; and,
(c) sensor means for sensing the voltage across said thyristor and for providing an output signal serving as said second input signal whereby said memory means is placed in a second of its bistable states and said output signal is of a second state.

4,298,811
MOS VOLTAGE DIVIDER
Roelof H. W. Salters, Cupertino, and Joannes J. M. Koomen, Los Altos, both of Calif., assignors to Signetics Corporation, Sunnyvale, Calif.
Filed Jul. 20, 1979, Ser. No. 59,228
Int. Cl.³ H03K *3/01*
U.S. Cl. 307—296 R 3 Claims

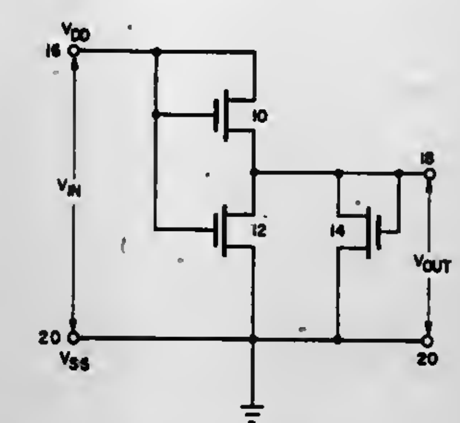

1. A voltage divider circuit, comprising:
(a) an input node, an output node, and a common node,
(b) first and second field effect transistors connected in parallel and having their respective drain and source electrodes connected in common across said output node and said common node, and
(c) a third field effect transistor connected directly across said input node and said output node and in series circuit with said parallel connected first and second field effect transistors across said input node and said common node, the gates of said first and third transistors being connected in common to said input node, and the gate of said second transistor being connected directly to said output node, said circuit producing a reduced dc voltage across said output node relative to dc voltage applied across said input node.

4,298,812
GAS COOLED ROTOR FOR AN ELECTRIC MACHINE
René Damiron, Cravanche; Roger Gillet, Belfort; Jean-François Heuillard, Cravanche, and Gilbert Ruelle, Belfort, all of France, assignors to Alsthom-Atlantique, Paris, France
Filed Oct. 25, 1979, Ser. No. 88,421
Claims priority, application France, Nov. 3, 1978, 78 31119
Int. Cl.³ H02K *1/32*
U.S. Cl. 310—61 3 Claims

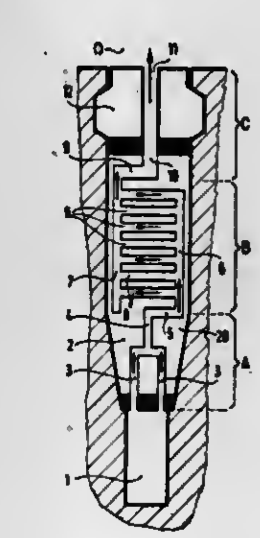

1. A rotor of an electric machine, said rotor including radial slots, winding coil conductors within said slots, subslots radially inboard of said slots and extending to the end of said rotor for causing cooling gas to enter said subslots axially and for movement through said radial slots for cooling of said winding coil conductors, cooling ducts shaped in said conductors and receiving said cooling gas, the improvement wherein said conductors are formed of first and second types, said first type being radially inward of said second type, said first type constituting a stack of perforated copper strips bearing slot-shaped first radial ducts providing a substantial radial path for the gas moving radially outwardly from said subslots through said first radial ducts provided within said first type coil conductors; said second type conductors comprising a stack of grooved copper strips, each strip including transverse ducts, said stack of grooved conductors forming second radial ducts on opposite sides of said stack, one of said second radial ducts being blocked at its radially outer end and being open at its radially inner end and in fluid communication with said first radial ducts, the other of said second radial ducts being closed off at its radially inner end and in open communication at its radially outer end to the periphery of said rotor such that said transverse ducts and said first and second radial ducts form an essentially transverse ventilation circuit in the form of a radiator and wherein said gas flows from said subslot radially through said first radial ducts within said first type coil conductors and enters said one second radial duct at the radially inner end thereof and passes transversely through said transverse ducts in parallel and exits radially from said other second radial duct through said radially outer end to the periphery of said rotor to effectively cool said first and second type conductors by cooling gas supplied solely from said subslots.

4,298,813
HIGH INTENSITY DISCHARGE LAMPS WITH UNIFORM COLOR
Peter D. Johnson, Schenectady, N.Y., assignor to General Electric Company, Schenectady, N.Y.
Filed Oct. 23, 1978, Ser. No. 953,582
Int. Cl.³ H01J *61/20*
U.S. Cl. 313—229 3 Claims

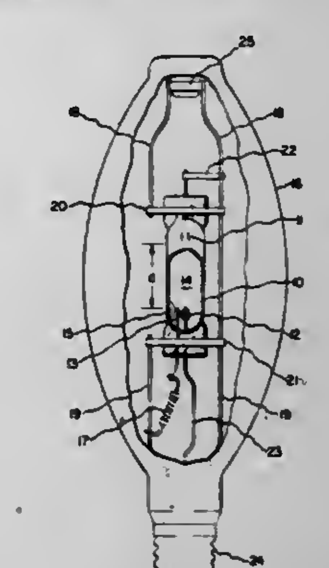

2. A metal halide-mercury arc discharge lamp including a light-transmissive discharge envelope having electrodes disposed at either ends thereof, comprising:
a metal halide disposed within said envelope; and
a quantity of elemental mercury also disposed within said envelope, and selected to be at a concentration of between approximately 0.7 mg/cm³ and approximately 1.7 mg/cm³, so that the voltage gradient along the discharge is between approximately 2 v/cm and approximately 10 v/cm.

4,298,814

DIRECTLY HEATED TYPE CATHODE ASSEMBLY

Yukio Takanashi, Hiratsuka, and Toshiharu Higuchi, Yokohama, both of Japan, assignors to Tokyo Shibaura Denki Kabushiki Kaisha, Kawasaki, Japan

Filed Oct. 16, 1979, Ser. No. 85,317

Claims priority, application Japan, Oct. 17, 1978, 53-126823

Int. Cl.³ H01J *1/46, 21/10*

U.S. Cl. 313—302 **19 Claims**

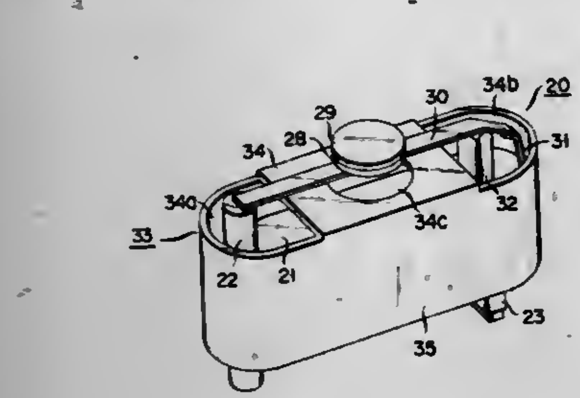

1. An electron gun assembly comprising three directly heated type cathode assemblies constructed independently of each other, grid electrodes each having three electron beam passing holes, support rods for supporting the cathode assemblies and grid electrodes, and cathode support means for attaching the cathode assemblies to the support rods, each of the cathode assemblies comprising:

a cathode cylinder;

a first electroconductive support member supported by the cathode cylinder;

a conductive spring member supported by the cathode cylinder;

a ribbon filament supported at a first end by the first electroconductive support member and at a second end thereof by the conductive spring member;

a metal plate fixed to a central portion of the filament;

an electron-emitting substance attached to the metal plate; and

a second support member, supported by the cathode cylinder, for supporting a portion of the filament between the metal plate and the conductive spring member,

the cathode cylinder being attached to the cathode support means so as to be fixed within the electron gun assembly.

19. A directly heated type cathode assembly for connection into an electron gun assembly including more than one such cathode assembly, comprising:

a cathode cylinder;

a first electroconductive support member supported by the cathode cylinder;

a conductive spring member supported by the cathode cylinder;

a ribbon filament supported at a first end by the first electroconductive support member and at a second end thereof by the conductive spring member;

a metal plate fixed to a central portion of the filament;

an electron-emitting substance attached to the metal plate; and

a second support member, supported by the cathode cylinder, for supporting a portion of the filament between the metal plate and the conductive spring member,

the cathode cylinder being adapted for connection within the electron gun assembly.

4,298,815

CATHODE RAY TUBE SOCKET WITH CONTROLLED SPARK GAPS

Theodore M. Ishihara, Chicago, and John F. Kulkens, Park Ridge, both of Ill., assignors to Zenith Radio Corporation, Glenview, Ill.

Filed Nov. 9, 1979, Ser. No. 92,862

Int. Cl.³ H01J *17/00, 21/00*

U.S. Cl. 313—325 **13 Claims**

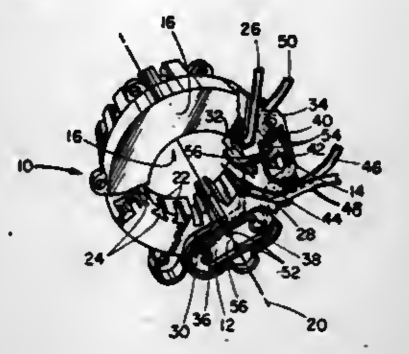

1. In a cathode ray tube socket for mechanically and electrically coupling a cathode ray tube to a television receiver including a plurality of first electrical connecting means for receiving a first set of conductors coupled to high voltage elements in a cathode ray tube, a plurality of second electrical connecting means for receiving a second set of conductors coupled to a plurality of high voltage sources in said television receiver, a dielectric housing having a central opening disposed therein with said first electrical connecting means disposed on the periphery of said central opening and said second electrical connecting means disposed on the outer periphery of said dielectric housing, a controlled spark gap for dissipating to neutral ground potential transient voltage surges originating in said cathode ray tube exceeding a precisely determined voltage level, said spark gap comprising:

means defining a cavity within said dielectric housing;

first electrode means disposed within said cavity, said first electrode means coupled to said first and second electrical connecting means;

second electrode means disposed within said cavity, said second electrode means coupled to neutral ground potential; and

wall means extending into said cavity and defining an aperture between said first and second electrodes, said wall means having a predetermined position between said electrodes corresponding to a predetermined breakdown voltage of said spark gap, said position being selected from a range of positions which corresponds to a range of spark gap breakdown voltages which includes said predetermined breakdown voltage, said range of breakdown voltages being such that the low end is associated with positions of said aperture nearest said first electrode.

9. A method of forming a high voltage spark gap having a precise breakdown voltage level in a cathode ray tube socket of a television receiver, said television receiver including a high voltage source, for protecting television receiver circuitry from transient overvoltage surges in a cathode ray tube caused by high voltage arc-over between high voltage elements and lower voltage elements in said cathode ray tube when said transient overvoltage surges exceed a predetermined voltage level, which comprises:

providing a cavity within said cathode ray tube socket;

fixedly positioning first and second electrode means in said cavity;

electrically coupling said first electrode means to said high voltage elements in said cathode ray tube and to said high voltage source in said television receiver;

electrically coupling said second electrode means to neutral ground potential; and

fixedly positioning rigid wall means in said cavity between said first and second electrodes so as to define an inter-electrode aperture, said wall means having a predetermined position between said electrodes corresponding to a predetermined breakdown voltage of said spark gap, said position being selected from a range of positions which corresponds to a range of spark gap breakdown voltages which includes said predetermined breakdown voltage, said range of breakdown voltages being such that the low end is associated with positions of said aperture nearest said first electrode.

4,298,816

MOLYBDENUM SUBSTRATE FOR HIGH POWER DENSITY TUNGSTEN FOCAL TRACK X-RAY TARGETS

Harold H. Hirsch, and Melvin R. Jackson, both of Schenectady, N.Y., assignors to General Electric Company, Schenectady, N.Y.

Filed Jan. 2, 1980, Ser. No. 109,163

Int. Cl.³ H01J *35/10*

U.S. Cl. 313—330 **6 Claims**

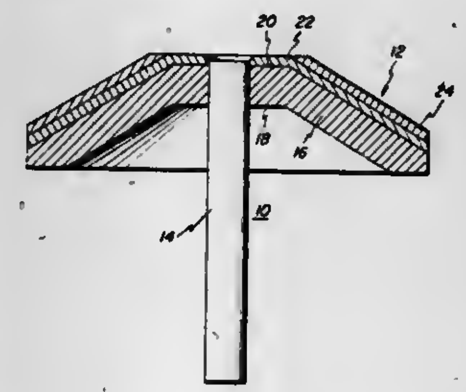

1. An improved three-layer rotary X-ray target consisting of a substrate body of a molybdenum alloy having a high strength at the elevated operating temperature of the target, an intermediate ductile layer of molybdenum or a ductile molybdenum alloy, and a focal track target layer of a tungsten based alloy, said intermediate layer being contiguous with said substrate body and being situate at least in part between said substrate and said target layer, said molybdenum alloy of said substrate being characterized by a 0.2% yield strength at 1100° C. of at least 9000 psi and said molybdenum or ductile molybdenum alloy of said intermediate layer being characterized by a total elongation or reduction in area over the range of 25°-1100° C. of at least 1.3%, whereby the growth of cracks which originate in said focal track layer upon extended exposure to high energy electrons are terminated in said ductile intermediate layer and are prevented thereby from entering and propagating through said substrate body.

4,298,817

ION-ELECTRON SOURCE WITH CHANNEL MULTIPLIER HAVING A FEEDBACK REGION

Jean-Denis Carette, 1409 rue St-Clement, Ancienne Lorette, Quebec, Canada (G2E 3L7), and Claude Bouchard, 1680 Carre Ader, Apt. 2,, Duberger, Quebec, Canada (H1P 1H8)

Filed Aug. 13, 1979, Ser. No. 66,058

Int. Cl.³ H01J *43/04, 27/02*

U.S. Cl. 313—362.1 **11 Claims**

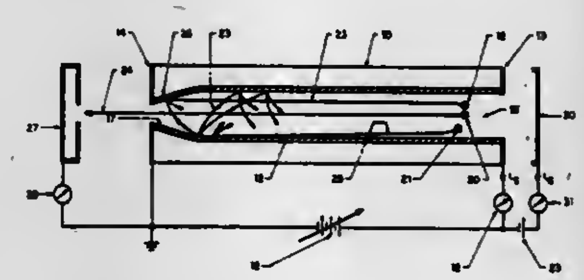

1. An ion-electron source, comprising:

a substantially straight tubular electron multiplier channel having an output aperture therein for ejecting ion-current formed therein;

inlet means for pressurizing the interior of said channel with a gas to a predetermined pressure; and

voltage polarization means for biasing said electron multiplier;

said channel including a feedback emitting region for intercepting some ions traveling a trajectory generally toward said aperture and emitting secondary electrons in response to ion interception, the intercepted ions and secondary electrons providing sufficient ion feedback to operate said electron multiplier in a self-sustained cascade mode.

4,298,818

ELECTRON GUN

Harry E. McCandless, Lancaster, Pa., assignor to RCA Corporation, New York, N.Y.

Filed Aug. 29, 1979, Ser. No. 70,738

Int. Cl.³ H01J *29/50*

U.S. Cl. 313—417 **4 Claims**

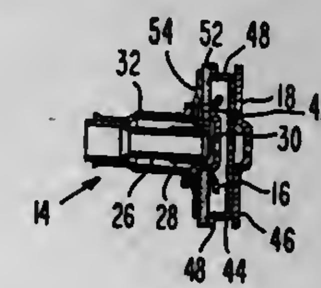

1. In a multi-beam electron gun for use in a cathode-ray tube, said gun including a plurality of cathode assemblies and at least two spaced successive electrodes having aligned apertures therein for passage of a plurality of electron beams, the improvement comprising,

said cathode assemblies and the two electrodes being individually attached to a single ceramic member, said ceramic member being the sole supporting interconnection within said gun between said cathode assemblies and two electrodes, said two electrodes being attached to one surface of said ceramic member and the cathode assemblies being attached to an opposite surface of said ceramic member.

4,298,819

BEAM CLEAN UP STRUCTURE FOR FLAT PANEL DISPLAY DEVICES

Thomas L. Credelle, Plainsboro, and Robert A. Gange, Belle Mead, both of N.J., assignors to RCA Corporation, New York, N.Y.

Filed Mar. 28, 1980, Ser. No. 135,124

Int. Cl.³ H01J *29/08*

U.S. Cl. 313—422 **16 Claims**

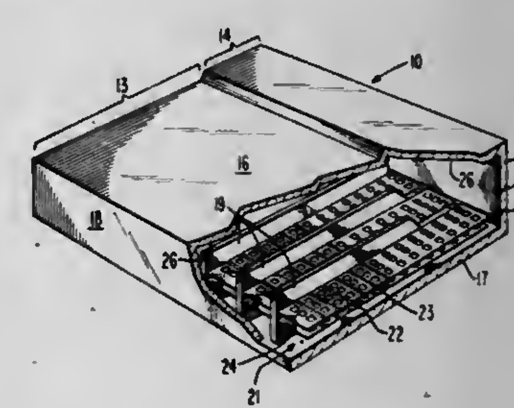

1. In a display device including two parallel spaced guide meshes forming a space between said guide meshes, said

meshes having a plurality of apertures arranged in columns longitudinally along said meshes and rows transversely across said meshes, said columns of apertures serving as guide paths for propagating electron beams between said meshes in said space, the improvement comprising:

electron beam clean up means for confining the cross section of said electron beams to maximum dimensions, said clean up means including a plurality of projections formed in said guide meshes between said rows of apertures and protruding into said space between said guide meshes.

4,298,820

LUMINESCENT SCREEN

Piet F. Bongers; Maurits W. van Tol, and John M. Robertson, all of Eindhoven, Netherlands, assignors to U.S. Philips Corporation, New York, N.Y.

Filed Jun. 18, 1979, Ser. No. 49,993

Claims priority, application Netherlands, Jun. 26, 1978, 7806828

Int. Cl.³ H01J *29/10*

U.S. Cl. 313—463 **8 Claims**

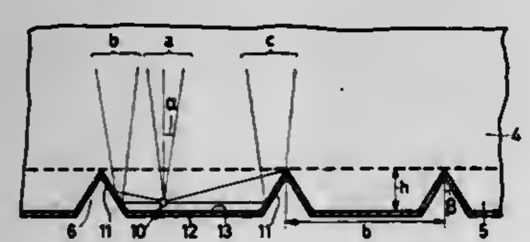

1. A luminescent screen comprising a substrate having a luminescent layer of a monocrystalline structure said layer including at least one activator, characterized in that the activated layer and the substrate together constitute a single self-supporting monocrystalline body, the activated layer being provided with a pattern of V-shaped grooves.

4,298,821

ELECTRON TUBE WITH PARTICLE TRAP INTEGRAL WITH ENVELOPE WALL

Eric D. Hendry, Chelmsford, England, assignor to English Electric Valve Company, Chelmsford, England

Filed Sep. 12, 1979, Ser. No. 74,672

Claims priority, application United Kingdom, Sep. 15, 1978, 36969/78

Int. Cl.³ H01J *29/84, 29/88*

U.S. Cl. 313—477 R **3 Claims**

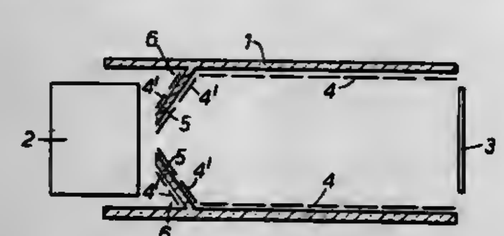

1. An electron tube having a tube envelope, and a target arranged to be scanned by an electron beam generated by an electron gun and wherein between said electron gun and said target a baffle member formed as a wall integral with the tube envelope is provided extending inwardly and towards said gun to provide a particle receiving cavity extending around the path of said electron beam from said gun to said target for retaining loose particles originating from said gun and which would otherwise fall upon said target when said tube is operated in a face-down position.

4,298,822

FOLDED FLUORESCENT LAMP AND SOCKET

Makoto Fukuda, Takatsuki, Japan, assignor to Matsushita Electronics Corporation, Osaka, Japan

Filed May 23, 1979, Ser. No. 41,789

Claims priority, application Japan, May 30, 1978, 53-65210

Int. Cl.³ H01J *61/42, 61/30, 61/02*

U.S. Cl. 313—493 **1 Claim**

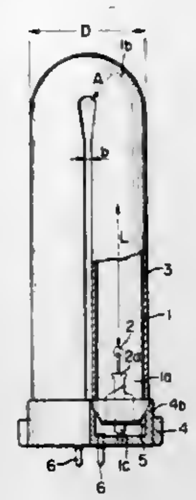

1. A fluorescent lamp comprising a U-shaped glass tube whose inside surface is coated with fluorescent materials and which is filled with mercury vapor and rare gas, two electrodes at the ends of said glass tube and a cap or base which bridges between said ends of said glass tube, said cap or base being formed with two cylindrical recesses each receiving an end of said U-shaped glass tube, said cap or base having terminal pins or prongs of G10q type, and a plurality of equiangularly spaced and axially extended ridges or projections extended from the peripheral wall of each of said cylindrical recesses for abutment with the end of said U-shaped glass tube, the width of said U-shaped glass tube being less than 60 mm; the distance between the legs of said U-shaped glass tube being greater than 0.5 mm, the ratio L/D being between 3 and 10, where L=the distance between said two electrodes and D=said width of said U-shaped glass tube; and the tube wall load being 0.05–0.10 w/cm².

4,298,823

FLUORESCENT DISPLAY DEVICE

Kishio Kawasaki, and Takao Kishino, both of Mobara, Japan, assignors to Futaba Denshi Kogyo K.K., Mobara, Japan

Filed Nov. 16, 1979, Ser. No. 94,985

Claims priority, application Japan, Nov. 28, 1978, 53-162666[U]

Int. Cl.³ H01J *63/04*

U.S. Cl. 313—497 **3 Claims**

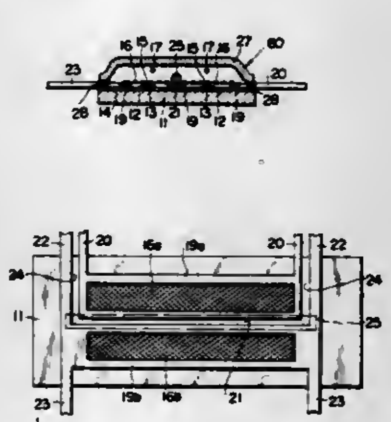

1. A fluorescent display device comprising:

a vacuum casing made up of a substrate and a front cover airtightly bonded together;

a pattern display section composed of a plurality of anodes each coated with a phosphor layer on the upper surfaces thereof and disposed on said substrate;

a plurality of control electrodes electrically isolated one after another and mounted above said pattern display section; said control electrodes being secured to spacer frames and at least some of said control electrodes being arranged in an opposite relationship making edges of said spacer frames adjacent;

a filamentary cathode stretched above said control electrodes for emitting thermions to be selectively impinged on said anodes to effect luminous display of letters or figures; and

an elongated insulator mounted on at least two adjacent control electrodes along the opposed edges of said spacer frames, whereby each of the control electrodes is connected together at the opposed edges of said spacer frames by means of said insulator.

4,298,824

MILLIMETER AND SUB-MILLIMETER RADIATION SOURCE

John E. Walsh, Box 264, Bradford, Vt. 05033, assignor to Dartmouth College, Hanover, N.H. and John E. Walsh, a part interest

Filed Dec. 18, 1979, Ser. No. 104,737

Int. Cl.³ H01J *25/00*

U.S. Cl. 315—4 **6 Claims**

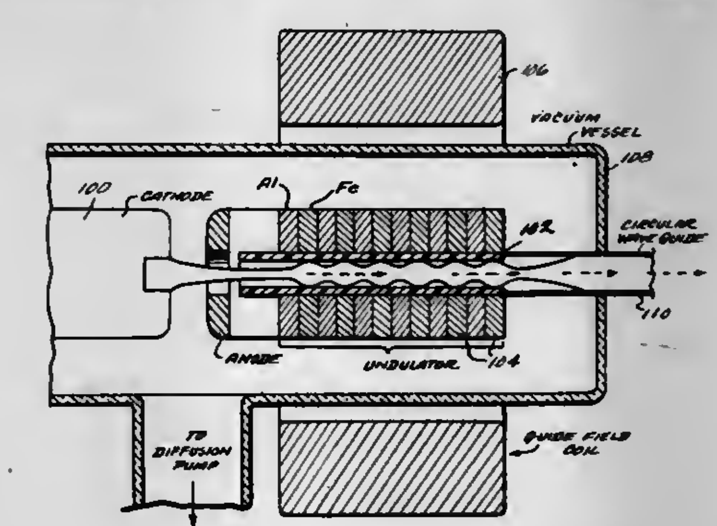

1. A radiation source comprising:

electron means for producing a beam of electrons and directing said beam along a linear path;

dielectric material having a dielectric constant less than 4 mounted in proximity to said path;

means for providing Ubitron type of interaction oscillatory velocity modulation to said beam along said path for providing millimeter and sub-millimeter wavelength radiation.

4,298,825

MAGNETRON DEVICE

Takahiro Daikoku, Ibaraki, and Tomokatsu Oguro, Mobara, both of Japan, assignors to Hitachi, Ltd., Tokyo, Japan

Filed Jun. 13, 1979, Ser. No. 48,063

Claims priority, application Japan, Jun. 16, 1978, 53-81879[U]

Int. Cl.³ H01J *25/50*

U.S. Cl. 315—39.51 **7 Claims**

1. In a magnetron device comprising a plurality of cooling fins stacked and secured to the periphery of a magnetron tube to extend in a direction substantially perpendicular to the axis of said tube and means for blasting cooling air passed through said cooling fins in a direction substantially perpendicular to said tube axis, the improvement wherein each of said cooling fins comprises a flat portion fitted to said tube and a plurality of tongue shaped pieces on the opposite sides of said flat portion, and alternate tongue shaped pieces on each side extend in different directions with respect to the plane of said flat portion so that said tongue shaped pieces of adjacent cooling fins are interdigitated to intersect with each other to define a plurality

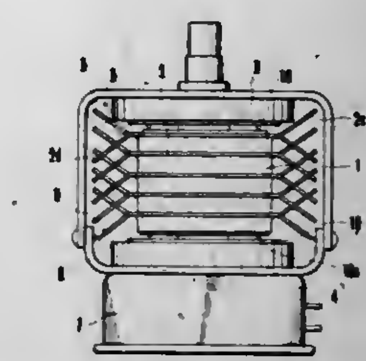

of contiguous parallel passages aligned in the direction of air flow for enhancing turbulence.

4,298,826

AUTOMATIC FLASH UNIT

Yasuo Nakayama, Tanashi, Japan, assignor to Morris Photo Ind. Co. Ltd., Kawajima, Japan

Filed Oct. 22, 1979, Ser. No. 87,469

Claims priority, application Japan, Oct. 27, 1978, 53-132247; Oct. 27, 1978, 53-132248

Int. Cl.³ H05B *41/32*

U.S. Cl. 315—151 **9 Claims**

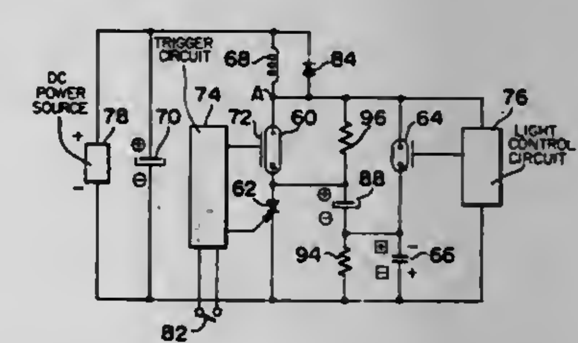

1. An automatic flash unit comprising:

a discharge lamp filled with xenon or like rare gas;

a first switching element connected in series with the discharge lamp for turning it ON and OFF;

a main capacitor for supplying electrical energy to the series circuit of the first switching element and the discharge lamp via an impedance element which is a resistor or inductance;

a DC power source for charging the main capacitor;

a series circuit composed of a second switching element conducted by a light control signal from light control means and a commutation capacitor and connected in parallel with the series circuit of the discharge lamp and the first switching element; and

means for charging the commutation capacitor of the series circuit in a polarity different from that in which the main capacitor is charged;

wherein stored charges of the commutation capacitor charged by the charging means are applied by the conduction of the second switching element to the first switching element to place it in a reverse biased condition, and wherein the charging means has the arrangement that an auxiliary commutation capacitor is adapted to be pre-charged by the DC power source in the same polarity as the main capacitor and is connected between the connection point of the discharge lamp and the first switching element and the connection point of the second switching element and the commutation capacitor, and that one part of stored charges of the auxiliary commutation capacitor is transferred by the conduction of the first switching element to the commutation capacitor.

4,298,827

POWER SOURCE CIRCUIT FOR A FLASH DISCHARGE LAMP

Yahei Nakajima, Himeji, Japan, assignor to Ushio Denki Kabushikikaisha, Tokyo, Japan

Filed Nov. 30, 1979, Ser. No. 98,990

Claims priority, application Japan, Dec. 1, 1978, 53-164567

Int. Cl.³ H05B *41/34*

U.S. Cl. 315—241 R **6 Claims**

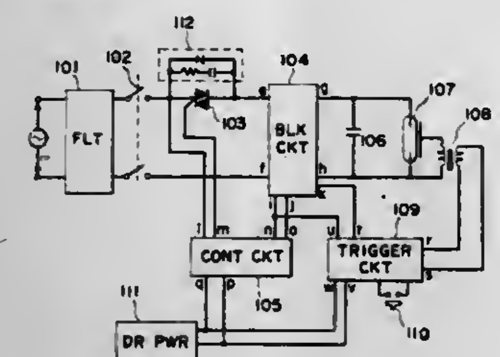

1. A power source circuit for a flash discharge lamp, comprising:

a power source;

a booster-rectifier circuit, having an input and an output;

a thyristor operatively connected to the input of said booster-rectifier circuit and operatively connected to said power source;

a discharge capacitor operatively connected to the output of said booster-rectifier circuit;

said booster-rectifier circuit including a detecting means for detecting a voltage across said discharge capacitor;

a trigger circuit; and

a control circuit, operatively connected to said detecting means and said thyristor, for controlling said thyristor;

said control circuit including means for providing an AC signal of substantially the same phase as the power source to the gate of said thyristor until the voltage of said discharge capacitor reaches a predetermined valve.

4,298,828

HIGH FREQUENCY ELECTRODELESS LAMP HAVING A GAPPED MAGNETIC CORE AND METHOD

James W. H. Justice, Murrysville, and Martin D. Nahemow, Pittsburgh, both of Pa., assignors to Westinghouse Electric Corp., Pittsburgh, Pa.

Continuation-in-part of Ser. No. 13,594, Feb. 21, 1979, abandoned, which is a continuation-in-part of Ser. No. 883,544, Mar. 6, 1978, abandoned. This application Aug. 8, 1979, Ser. No. 64,935

Int. Cl.³ H05B *41/16, 41/24*

U.S. Cl. 315—248 **29 Claims**

1. An electrodeless discharge device designed to operate with a rated power consumption when energized with predetermined radio frequency energy as generated by a radio-frequency power source, said radio-frequency power source having an output portion comprising a tuned circuit having a resonant frequency which approximates said predetermined radio frequency at which said device is to be operated, said device comprising:

a. a sealed light-transmitting globular-shaped envelope of predetermined dimensions; a discharge-sustaining medium within said envelope; and a layer comprising phosphor material carried on the interior surface of said envelope;

b. a core at least partially contained within and operatively positioned within said envelope, said core principally comprising magnetic material of high permeability and having a looped configuration of predetermined dimensions and also having predetermined cross-sectional dimensions, and said core also including narrow gap means comprising low-permeability substance traversing the cross section of said core; and a winding having a predetermined number of turns wrapped about said core;

c. lead-in members connecting to said winding for connection to said radio-frequency power source; said core comprising a part of said tuned circuit output portion of said radio-frequency power source, and the magnetic permeability of said core constituting a principal variable factor which can cause the resonant frequency of said tuned circuit output portion to vary; and during operation of said device, the radio-frequency energy passed through said winding creates radio-frequency electromagnetic fields through and about said core and within said envelope to excite said discharge-sustaining medium to emit short wavelength radiations, and said layer comprising phosphor is responsive to said short wavelength radiations

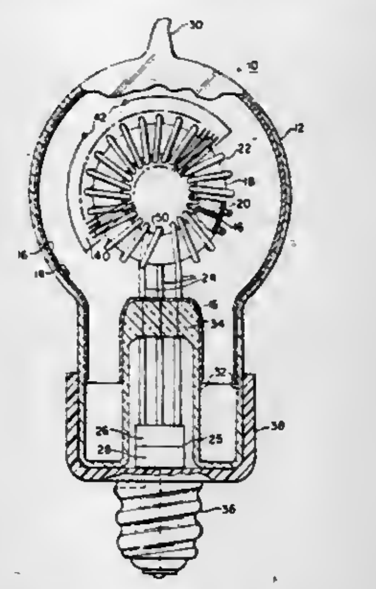

to emit visible radiations which pass through said envelope; and

d. during operation of said device, said gap means in said core stabilizes the effective permeability of said core so that substantial changes in the permeability of the principal material of siad core reflect only as minor changes in the effective permeability of said gapped core, which stabilizes the operating resonant frequency of said tuned circuit output portion; and said gap means in said core also substantially increases the Q of said tuned circuit, as compared to the Q of an otherwise similar tuned circuit which incorporates a core formed entirely of said principal core material, to substantially increase the selectivity of said tuned circuit output portion to suppress output harmonics of said resonant frequency of said tuned circuit output portion.

4,298,829

POWER SUPPLY AND DEFLECTION CIRCUIT WITH RASTER SIZE COMPENSATION

David W. Luz, Indianapolis, Ind., assignor to RCA Corporation, New York, N.Y.

Filed Feb. 8, 1980, Ser. No. 119,990

Int. Cl.³ H01J *29/70*

U.S. Cl. 315—408 **16 Claims**

1. A power supply and deflection circuit with raster size compensation, comprising:

a deflection winding;

a deflection generator coupled to said deflection winding for periodically applying a trace voltage to said deflection winding to produce scanning current in said deflection winding and for periodically generating a retrace pulse voltage across said deflection winding;

a flyback transformer with a winding coupled to said deflection generator for developing retrace pulse voltages;

a high voltage circuit coupled to a high voltage winding of said flyback transformer for developing an ultor accelerating potential from the retrace pulse voltage developed across said high voltage winding;

a load circuit coupled to a winding of said flyback transformer;

a source of supply voltage for developing said trace voltage and for providing energy to said load circuit;

a controllable switch coupled to said source and to a winding of said flyback transformer other than said high voltage winding for controlling the magnitude of said trace voltage, said high voltage and load circuits drawing current from said source through said other flyback transformer winding such that variations of a given sense in said other flyback transformer winding current produce same sense variations in retrace pulse voltage amplitude;

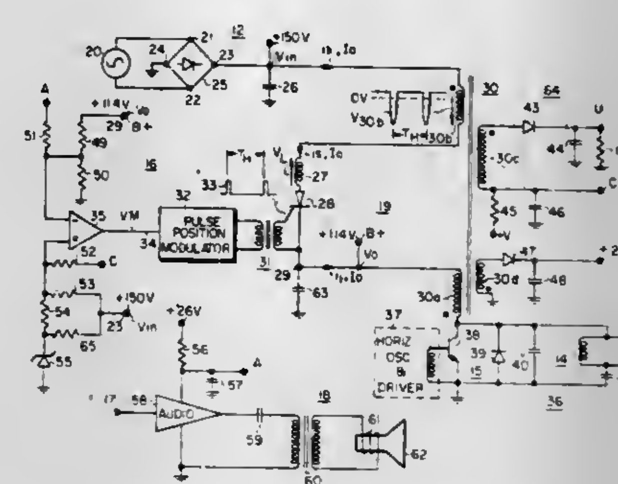

a control circuit coupled to said controllable switch for varying the conduction time of said controllable switch;

means for developing an input signal representative of variations in the load current drawn by said load circuit, variations in said load current producing a same sense variation in said other flyback transformer winding current; and

means for applying said input signal to said control circuit to vary the conduction time of said controllable switch in a manner that varies the trace voltage magnitude in the same sense as that of said variations in said other flyback transformer winding current.

4,298,830

HORIZONTAL DEFLECTION GENERATOR AND DRIVER CIRCUIT

Peter R. Knight, Indianapolis, Ind., assignor to RCA Corporation, New York, N.Y.

Filed Nov. 30, 1979, Ser. No. 98,923

Int. Cl.³ H01J *29/70*

U.S. Cl. 315—411 **6 Claims**

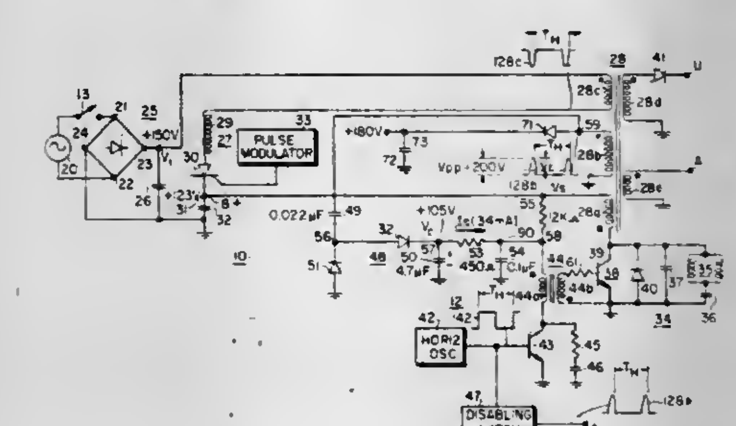

1. A deflection generator and driver circuit, comprising:

a deflection winding;

trace switching means responsive to a deflection rate switching signal for generating scanning current in said deflection winding;

a driver stage responsive to a deflection rate control signal for developing said deflection rate switching signal;

means coupled to said driver stage for applying said deflection rate switching signal to said trace switching means to control the conduction of said trace switching means;

a source of deflection rate alternating current voltage developing a first polarity pulse voltage during a retrace interval of each deflection cycle and an opposite polarity trace voltage during a trace interval of each deflection cycle; and

DC supply means coupled to said source and to said driver stage for providing a load current to said driver stage at an output terminal of said DC supply means, including

a first capacitor series coupled with said source;

a first rectifier coupled to said first capacitor for charging said first capacitor from said trace voltage during said trace interval;

a second capacitor coupled to said output terminal, and

a second rectifier coupled to said source and to said second capacitor for applying during said retrace interval the trace interval voltage developed across said first capacitor in series with said pulse voltage to develop a direct current supply across said second capacitor, said pulse voltage charging said first capacitor during said retrace interval to a voltage polarity opposite that established across said first capacitor during said trace interval and to a voltage magnitude that develops a direct current supply voltage that is of a substantially lesser magnitude than that of said pulse voltage.

4,298,831

METHOD AND APPARATUS FOR OPERATING A PLURALITY OF PARALLEL COUPLED, ARBITRARILY LOADED INDUCTION MACHINES FROM A SINGLE CONTROLLED CURRENT INVERTER

Paul M. Espelage, Salem, Va., and John D. D'Atre, Ballston Lake, N.Y., assignors to General Electric Company, Schenectady, N.Y.

Filed Mar. 24, 1980, Ser. No. 132,783

Int. Cl.³ H02P *1/54, 5/46, 1/24, 5/28*

U.S. Cl. 318—112 **14 Claims**

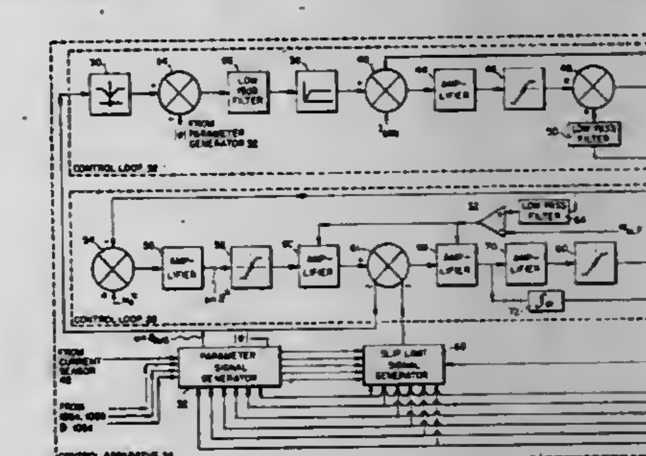

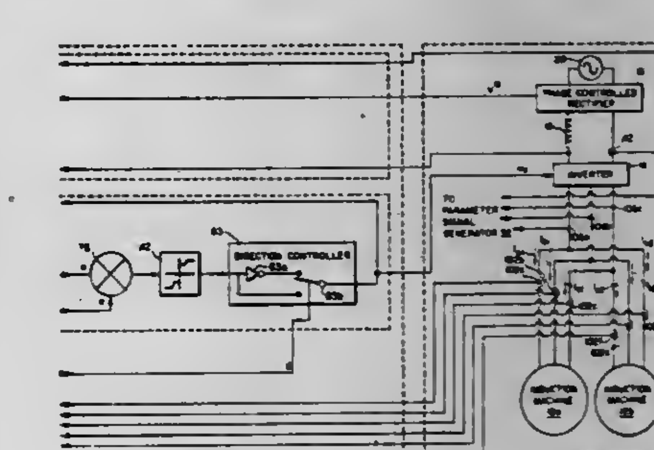

1. For use with an inverter-induction machine drive system

comprised of a direct current excited-inverter and a plurality of arbitrarily loaded induction machines, the machines coupled in parallel across the output of said inverter and each machine receiving variable amplitude, variable frequency alternating current from said inverter, an improved control apparatus for regulating inverter output current amplitude and frequency in response to operator commands, comprising:

circuit means coupled to said inverter and to each of said machines, said circuit means processing inverter output voltage and machine stator currents to produce a first signal varying in accordance with the average machine phase angle and a second signal varying in accordance with the slip frequency of the most heavily loaded one of said machines;

a first control loop coupled to said circuit means and said inverter, said first control loop being responsive to operator commands and regulating the amplitude of inverter output current by feedback control in response to the average machine phase angle relationship magnitudes; and

a second control loop coupled to said circuit means and said inverter, said second control loop being responsive to operator commands and regulating the frequency of inverter output current by feedback control in response to the average machine phase angle and the slip frequency of the most heavily loaded one of said induction machines to assure that the most heavily loaded one of said induction machines has sufficient flux, to remain synchronized to said inverter thereby reducing the liklihood of machine pull-out and inverter instability.

4,298,832

DIGITAL MOTOR SPEED CONTROLLER

Robert H. Acker, Packanack Lake; William C. Wessling, Sparta; Arnold J. Brand, Parsippany, and Bob N. Naydan, Wyckoff, all of N.J., assignors to The Singer Company, Little Falls, N.J.

Filed Mar. 14, 1980, Ser. No. 130,279

Int. Cl.³ H02P *5/16*

U.S. Cl. 318—318 **5 Claims**

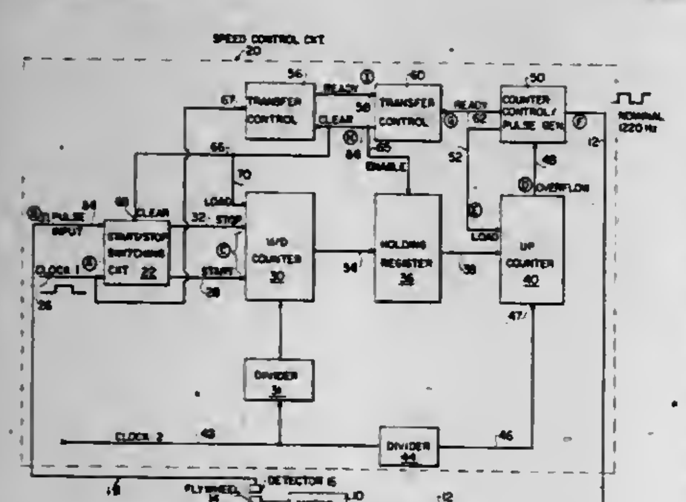

1. A gyroscope motor speed control system comprising:

a two-axis gyroscope motor having a gyro wheel for sensing tilt about two axes and having a shaft for driving the gyro wheel, said motor being adapted to have a speed which is proportional to the frequency of the input signal;

detecting means for producing signals in response to cyclical rotation of the motor shaft;

first counter means for counting during a period of time between the beginning of a clock signal and a detecting means signal whereby the count corresponds to the time period;

second counter means loaded by the count of the first counter means and incremented therefrom for generating overflow pulses having a frequency proportional to the time period;

generating means connected in circuit to the output of the second counter means for driving the motor, whereby the time period is urged to a null thus maintaining constant motor speed and phase with respect to a reference;

register means connected between the first and second counter means for storing the count of the first counter means during a clock cycle and transferring the count to the second counter means at the end of a clock cycle;

switching means connected between the detecting means and the first counting means for initiating a count therein at the leading edge of the clock signal and terminating the count upon the occurrence of the detecting means signal; and

transfer means connected to the output of the second counter means for controlling the transfer of the count to the second counter means.

4,298,833

APPARATUS FOR DAMPING OPERATOR INDUCED OSCILLATIONS OF A CONTROLLED SYSTEM

John W. Edwards, and John W. Smith, both of Lancaster, Calif., assignors to The United States of America as represented by the Administrator of the National Aeronautics and Space Administration, Washington, D.C.

Filed Feb. 29, 1980, Ser. No. 126,064

Int. Cl.³ G05B *13/00*

U.S. Cl. 318—561 **10 Claims**

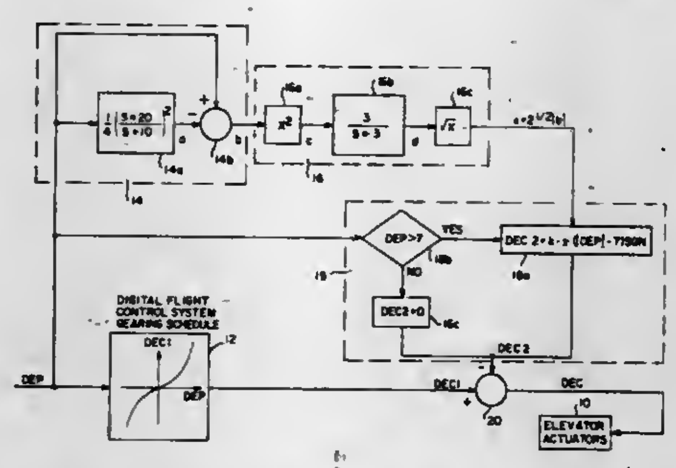

1. In a control system having linear and quadratic terms in its control transfer function of the form DEC=(A+B|DEP|)-DEP, where A is a constant less than 1, B is a constant smaller than A by an order of magnitude, DEP is an operator controlled input signal and DEC is the output control signal of the system, a nonlinear filter system for modifying the output control signal DEC as a function of the frequency and amplitude of the operator controlled input signal DEP to suppress oscillations in the output control signal comprised of means for producing a signal the amplitude of which is a frequency and amplitude estimation of the input signal, means for rectifying and smoothing said frequency and amplitude estimation signal, and means responsive to the output of the rectification and smoothing means for suppressing the output control signal in proportion to the frequency and amplitude of said operator controlled input signal without rate limiting the control signal output.

4,298,834

POWER DISSIPATION REGULATING CIRCUIT FOR INDUCTION MOTOR BY SUPPLY VOLTAGE CONTROL IN FUNCTION OF PHASE ANGLE

Gerald D. Opfer, 8724 Via Diego Ct., Lakeside, Calif. 92040

Filed Oct. 17, 1980, Ser. No. 198,201

Int. Cl.³ H02P *7/62*

U.S. Cl. 318—729 **7 Claims**

1. In a device for maintaining the power factor of an induction motor to a desirable value regardless of load and line voltage variations by switching off the voltage applied to the motor during each cycle for a period of time in function of an error signal, a circuit for generating said error signal in response to the phase lag between the applied voltage and the current drawn by the motor which comprises:

means for generating a train of pulses having a width proportional to said phase lag;

means for reducing said width by a predetermined period wherein said means for reducing comprises for each pulse:

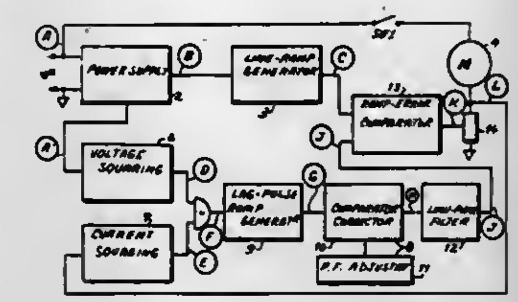

means for generating a ramp voltage beginning with the leading edge of said pulse;

means for the delaying said leading edge until said ramp voltage reaches a predetermined voltage value corresponding to said predetermined period; and

means for developing a voltage level proportional to the reduced width of said pulses.

4,298,835

VOLTAGE REGULATOR WITH TEMPERATURE DEPENDENT OUTPUT

Don H. Rowe, Portola Valley, Calif., assignor to GTE Products Corporation, Stamford, Conn.

Filed Aug. 27, 1979, Ser. No. 70,078

Int. Cl.³ G05F *1/46*

U.S. Cl. 323—281 **1 Claim**

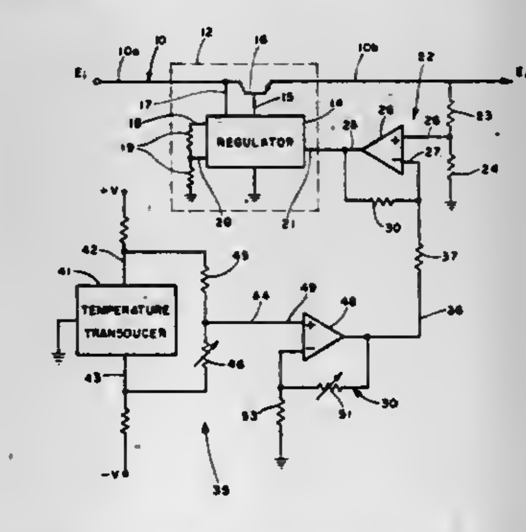

1. A circuit for regulating voltage on a power supply output line comprising

a voltage regulator having an input and an output connected to said output line.

said regulator being adapted to derive an error voltage at said regulator output for changing the voltages on said output line in a direction to reduce said error voltage substantially to zero,

a differential amplifier having first and second inputs and an output connected to said input of said regulator,

said amplifier being adapted to algebraically add voltages at said first and second inputs to produce the sum at the output,

said first input said amplifier being connected to said output line whereby to sense the regulated voltage thereon,

a temperature transducer having an output and being responsive to ambient temperature to produce a voltage at said transducer output characterized by an absolute voltage change per degree change of temperature, and

means to connect said transducer output to the second input of said amplifier comprising

an operational amplifier having a first input connected to the output of said transducer and a second input and an output,

a feedback loop connected between said operational amplifier output and said second input of said operational amplifier and

a variable resistor connected in said feedback loop, the resistive value of said variable resistor being determinative of the value of the amplification factor of said operational amplifier whereby to set the slope of the temperature-voltage characteristic of the circuit.

4,298,836

PARTICLE SHAPE DETERMINATION

Michael R. Groves, Miami, and Wallace H. Coulter, Miami Springs, both of Fla., assignors to Coulter Electronics, Inc., Hialeah, Fla.

Filed Nov. 23, 1979, Ser. No. 96,945

Int. Cl.³ G01N *27/00*

U.S. Cl. 324—71 CP **14 Claims**

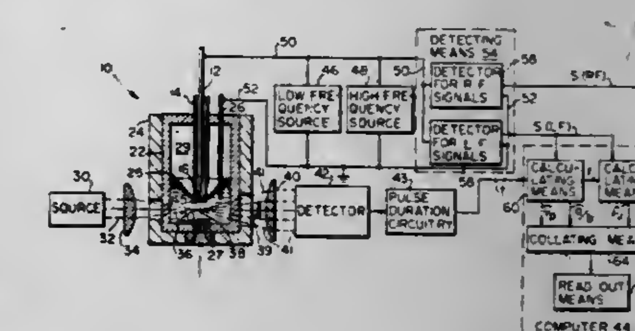

1. A particle scanning apparatus including an orifice for electrical impedance measurements of individual particles suspended in a liquid stream, focusing means for hydrodynamically focusing the stream of particles so the particles proceed along a predetermined trajectory through the orifice, first electrical current means for providing a low frequency electrical current through said orifice to produce an electrical first impedance signal for each particle, second electrical current means for providing a high frequency electrical current through said orifice to produce an electrical second impedance signal for each particle, the particle scanning apparatus comprising:

detection means for producing a length signal representative of the length of each particle;

means for correlating said length signal, said first impedance signal and said second impedance signal for each particle;

whereby the producing and correlating of said signals provides all the parameters required for the determination of the internal resistivity of each particle.

4,298,837

HAND HELD TESTING DEVICE FOR MEASURING DIFFERENT ELECTRICAL QUANTITIES

Manfred Koslar, Rheda-Wiedenbrueck, Fed. Rep. of Germany, assignor to Siemens Aktiengesellschaft, Berlin & Munich, Fed. Rep. of Germany

Filed Apr. 1, 1980, Ser. No. 136,360

Claims priority, application Fed. Rep. of Germany, Apr. 11, 1979, 2914761

Int. Cl.³ G01R *31/02*

U.S. Cl. 324—72.5 **12 Claims**

1. A hand held testing device having means for selecting independently one of several functions and one of several ranges, respectively, for measuring different electrical quantities within a wide range of magnitudes, comprising in combination:

(a) a first handle, a second handle and a cable connecting the two handles, each of said handles being provided with a hollow body for accomodating electrical units and with a test prong for contacting a respective measuring point;

(b) a function selecting switch and a range selecting switch both arranged on said first handle; a first printed circuit board assembly mounted within the body of said first handle and carrying two separate groups of contacting areas assigned to said function selecting switch and to said range selecting switch, respectively; each of said switches further having a switch frame and movable contact elements arranged in parallel thereon and being movable in common and stepwise, between different selector positions, in the direction of the long axis of said first handle, and when in a selector position, being in close contact with respective neighboring contact areas; each of said switch frames having a finger grip element extending through said first handle body at opposite sides for manual operation of the respective switch;

(c) two selector areas arranged side by side and between the two finger grip elements on one surface of said first handle, the first selector area marking selector positions of said function selecting switch and the second selector area marking selector positions of said range selecting switch;

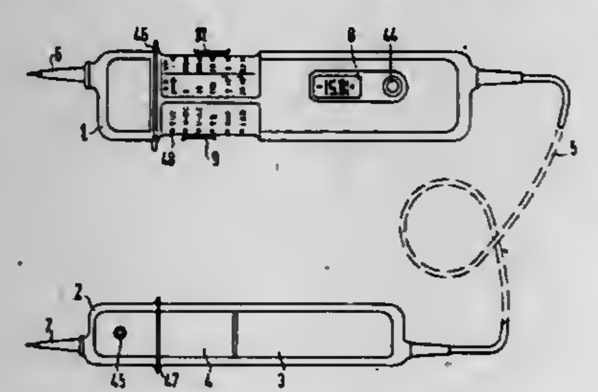

(d) a semiconductor display device mounted in said body of said first handle, and having a display area arranged to be visible through the body of said first handle on the same side of said first handle as said selector areas;

(e) a second printed circuit board assembly mounted aside said first printed circuit board assembly in said body of said first handle and electrically connected to said first printed circuit board assembly, said second printed circuit board assembly carrying measurement processing circuit arrangements on one surface and means for connecting the display device to outputs of said measurement processing circuit arrangements arranged on the opposite surface; and

(f) a chargable voltage source unit and means for charging the same built into said second handle.

4,298,838

TRANSFORMER DEVICE

Masahiko Akamatsu, Amagasaki, and Ryohei Uchida, Himeji, both of Japan, assignors to Mitsubishi Denki Kabushiki Kaisha, Tokyo, Japan

Division of Ser. No. 759,192, Jan. 13, 1977, abandoned. This application Jan. 31, 1978, Ser. No. 873,950

Claims priority, application Japan, Jan. 14, 1976, 51-3660; Jan. 14, 1976, 51-3669; Apr. 9, 1976, 51-40676

Int. Cl.³ G01R *33/00;* **H03K** *7/00;* **H01H** *85/22*

U.S. Cl. 324—117 R **3 Claims**

1. A current transformer device comprising:

two magnetic cores excited by one exciting current and maintained in the non-saturated state;

an input winding wound on at least one of the magnetic cores;

at least one exciting winding wound on the two magnetic cores and passing the exciting current;

detecting means including detecting windings wound on said magnetic cores for detecting a magnetic flux change rate of at least one of the magnetic cores;

exciting means connected to said at least one exciting winding and driven by an output of said detecting means for switching the polarity of a voltage applied to the exciting winding based on the output of the detecting means to maintain said cores in the non-saturated state; and

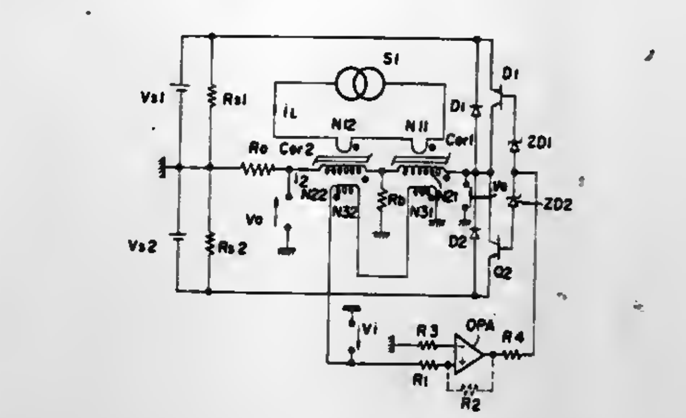

means for obtaining the current value passing through the exciting winding circuit.

4,298,839

PROGRAMMABLE AC ELECTRIC ENERGY METER HAVING RADIATION RESPONSIVE EXTERNAL DATA INTERFACE

Paul M. Johnston, Raleigh, N.C., assignor to Westinghouse Electric Corp., Pittsburgh, Pa.

Filed Mar. 31, 1978, Ser. No. 891,997

Int. Cl.³ G01R *11/04;* **H04B** *9/00;* **G08C** *9/06*

U.S. Cl. 324—157 **11 Claims**

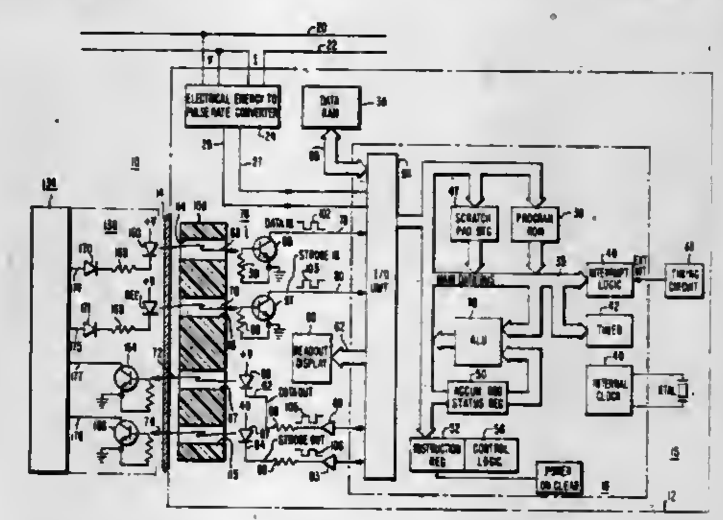

1. An electric energy meter including a programmable time based measuring system for totalizing measured parameters of electric energy usage, said meter interactively communicating with a programmer/reader unit by way of binary coded light radiations, said meter comprising:

a sealed enclosure including a cup-shaped cover wholly enclosing said measuring systam, said cover including an optically transparent portion thereof fcr allowing the transmission of said light radiations through said enclosure, said cover further including integral index means having a fixed position thereat for orienting said programmer/reader unit;

said measuring system including a metering sequence logic control circuit having a data input/output unit and a read/write data memory means, said memory means electronically storing metering data and program data and being connected to said input/output unit so as to transfer data therebetween;

radiation sensitive data interface means including a first light radiation emitter and a first light radiation sensor for establishing communications with said programmer/reader unit, and including a second light radiation emitter cooperating with both said first light radiation sensor and emitter so as to interactively send data at an arbitrary rate, and further including a second light radiation sensor cooperating with both said first light radiation emitter and sensor so as to interactively receive data at an arbitrary rate; and

radiation coupling means providing optically isolated light radiation paths between said transparent portion of said cover and said data interface means, said radiation coupling means having a predetermined aligned position relative to said index means such that said radiation sensitive data interface means is aligned with said programmer/reader unit thereby facilitating interactive bi-directional communication between said programmer/reader unit and said data memory means.

4,298,840

PLURAL ELECTRODE METHOD AND MEANS FOR WATER BOTTOM LOGGING

Jürgen H. Bischoff, and Joachim A. Sebulke, both of Berlin, Fed. Rep. of Germany, assignors to Shell Internationale Research Maatschappij B.V., Netherlands

Filed May 7, 1979, Ser. No. 36,681

Claims priority, application United Kingdom, May 19, 1978, 20741/78

Int. Cl.³ G01V *3/06, 3/15*

U.S. Cl. 324—365 **14 Claims**

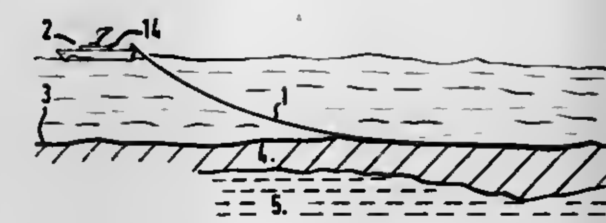

6. Means for water bottom logging comprising a flexible cable with insulated electrical leads, and carrying electrodes on the outer wall thereof that are electrically connected to at least some of the leads, said electrodes being arranged along the cable in a configuration consisting of at least two non-overlapping groups of electrodes, a first group of these electrodes being current supply electrodes, and the electrodes of the other group or groups being measuring electrodes for measuring potential differences between at least two pairs of electrodes, wherein a fixed ratio exists between the distance between the electrodes of each pair of measuring electrodes and the distance between said pair of measuring electrodes and the first group of electrodes, and wherein further the pairs of measuring electrodes adjoin each other such that each two pairs have one measuring electrode in common.

4,298,841

SIGNAL ENVELOPE DETECTING SYSTEM

Milton Dishal, Clifton, N.J., assignor to International Telephone and Telegraph Corporation, New York, N.Y.

Filed Sep. 14, 1979, Ser. No. 75,616

Int. Cl.³ H03K *5/24, 5/153*

U.S. Cl. 328—117 **16 Claims**

1. A signal envelope detecting system for detecting the envelope of a signal requiring accurate reproduction over a large dynamic range comprising:

a source of said signal;

a plurality of amplitude detectors coupled to said source, each of said plurality of detectors being responsive to a control signal, said control signal rendering each of said plurality of detectors operative one at a time to detect the amplitude of said signal in a different amplitude range of said signal and holding the others of said plurality of detectors not rendered operative inoperative; and

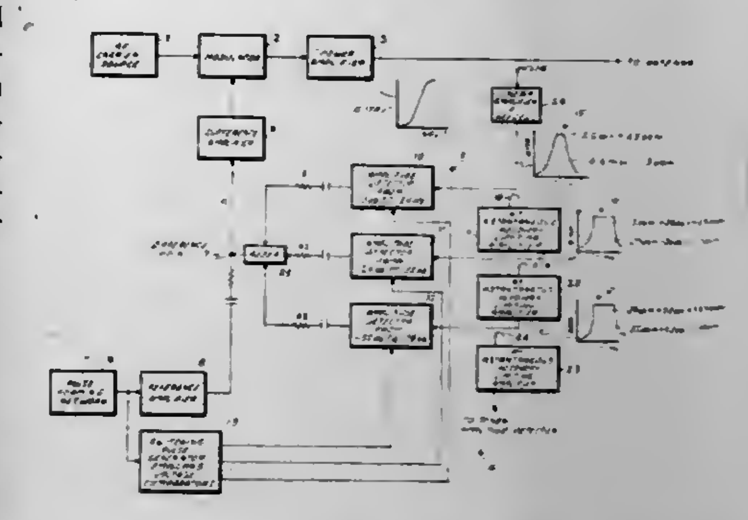

means coupled to the output of said plurality of detectors to receive the output signals therefrom.

4,298,842

HETEROPOLAR MACHINE FOR DEMODULATING POLYPHASE VOLTAGES INTERFERING AMONG THEMSELVES

Gérard O'Mahony, 95 rue de Versailles, 22410 Ville d'Avray, France

Filed Jun. 12, 1979, Ser. No. 47,757

Claims priority, application France, Jun. 14, 1978, 78 17836

Int. Cl.³ H03D *3/18*

U.S. Cl. 329—50 **22 Claims**

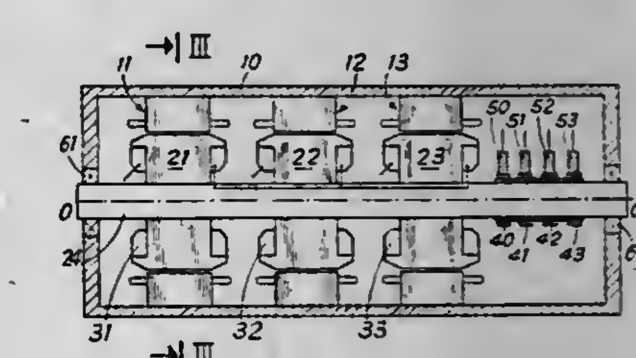

1. A demodulator for demodulating polyphase voltages at n phases interfering among themselves and which create a system of polyphase pseudo-sinusoidal voltages modulated in amplitude to a pulsation ϵ, in order to obtain a system of polyphase voltages of pulsation ϵ, the demodulator comprising n polyphase synchronous heteropolar rotating machines including:

(a) n stators at n phases fed by n systems of polyphase pseudo-sinusoidal voltages modulated in amplitude to a pulsation ϵ, and of the form:

$$U_{ip} = U_0 \sin\left(\omega_1 t + \frac{2\pi p}{n}\right) + U_0 \sin\left(\omega_2 t + \frac{2\pi(i+p)}{n}\right)$$

in which i represents the group index of the voltages and varies from 1 to n, and p represents the index of phase in the group of voltages and varies from 1 to n,

(b) n wound rotors mounted within said n stators and each including magnetic circuits made up of a low loss magnetic material and capable of transmitting an alternating magnetic flux without damping, each rotor having the same number of poles as a corresponding stator, and

(c) means for collecting from the n rotors, n systems of polyphase voltages of pulsation ϵ.

4,298,843
STABILIZED DC AMPLIFIER
John M. Nixon, Mineral Wells, Tex., assignor to Edo-Aire Mitchell, Mineral Wells, Tex.
Filed Jun. 15, 1979, Ser. No. 48,789
Int. Cl.^{3} H03F *1/02, 1/26*
U.S. Cl. 330—9 **9 Claims**

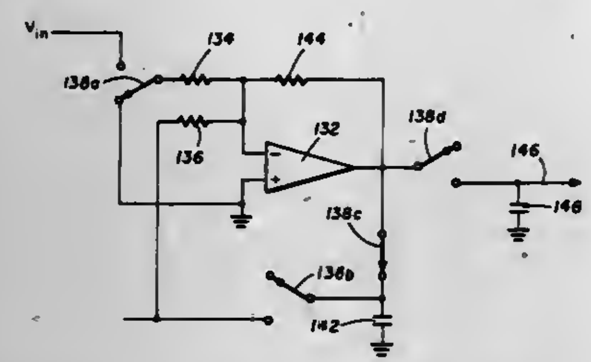

1. A stabilized DC amplifier circuit, comprising:
an amplifier,
mixing means including first and second resistors connected to the input of said amplifier,
sample and hold means, and
switching means having a first position for connecting: (1) said first resistor to a reference source, and (2) the output of said amplifier to said sample and hold means; and having a second position for connecting: (1) said first resistor to the input signal, (2) said sample and hold means to the second resistor, and (3) disconnecting said sample and hold means from the output of said amplifier.

4,298,844
SPLIT-BAND REDUNDANT AMPLIFIER SYSTEM
Richard L. Shimp, Waynesboro, Va., assignor to ComSonics, Inc., Harrisonburg, Va.
Filed Mar. 21, 1980, Ser. No. 131,940
Int. Cl.^{3} H03F *3/68, 1/18*
U.S. Cl. 330—124 D **3 Claims**

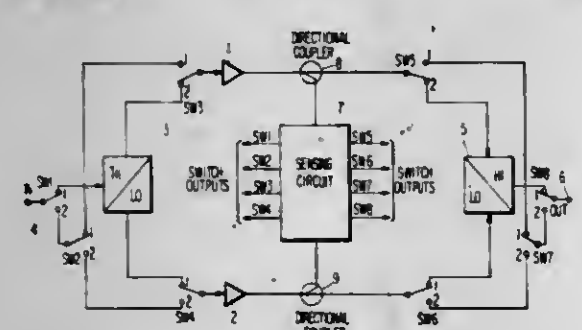

1. A split-band, redundant amplifier system having an input terminal and an output terminal comprising:
at least two identical amplifiers each having an input and an output and capable of amplifying signals having frequencies within a predetermined pass band,
first filter means having an input and at least two outputs for receiving signals at its input and dividing those signals into at least two contiguous split-bands within said predetermined pass band at its at least two outputs,
second filter means having at least two inputs and an output for receiving signals in said at least two contiguous split-bands and combining those signals at its output,
switching means connected to said at least two identical amplifiers and said first and second filter means for selectively connecting said input terminal to the input of said first filter means or one of said at least two identical amplifiers and for selectively connecting said output terminal to the output of said second filter means or one of said at least two identical amplifiers, said input terminal normally being connected to the input of said first filter means and said output terminal normally being connected to the output of said second filter means, and
sensing means connected to the outputs of each of said at least two identical amplifiers for detecting when an amplifier becomes inoperative and for controlling said switching means to disconnect an inoperative amplifier from said first and second filter means and to connect an operative amplifier to said input and output terminals.

4,298,845
DYE LASERS
Jean-Pierre Laude, St. Cyr la Riviere, France, assignor to Instruments S.A., Paris, France
Filed Oct. 10, 1979, Ser. No. 83,533
Claims priority, application France, Oct. 18, 1978, 78 29690
Int. Cl.^{3} H01S *3/05*
U.S. Cl. 331—94.5 C **3 Claims**

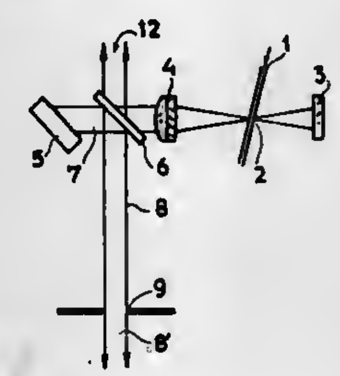

1. In a dye laser, a combination comprising
means defining a resonant cavity having two ends;
a reflecting mirror closing one of said ends, and an angular dispersive system in form of a grating closing the other of said ends;
means for passing a stream of dye as the active medium through said cavity;
a beam separating system intermediate said two ends for extracting the main laser beam from the cavity in two opposite directions, the part of the beam which is extracted in one of the directions being a useful beam part and being directed from said angular dispersive system towards a system for application, and the part of the beam which is extracted in the other direction being a stray useless beam part;
aperture means in the path of said useful beam part within or without said cavity for isolating one wavelength from said useful beam part; and
a mirror for recycling said stray useless beam part and returning the same towards said angular dispersive system in parallelism with said main laser beam.

4,298,846
SEMICONDUCTOR DEVICE
Yutaka Hirano, Atsugi; Nobutoshi Fukuden, Yokohama, and Toshiaki Saito, Kawasaki, all of Japan, assignors to Fujitsu Limited, Kawasaki, Japan
Filed Mar. 10, 1980, Ser. No. 128,655
Claims priority, application Japan, Mar. 10, 1979, 54-30994
Int. Cl.^{3} H03H *7/38*
U.S. Cl. 333—32 **36 Claims**

1. A semiconductor device, assembled on a base, comprising:
a semiconductor chip having an input electrode and an output electrode;
an input lead connected to said input electrode;
an output lead connected to said output electrode; and

capacitors mounted between said input lead and said semiconductor chip, said capacitors comprising at least one capacitor for grounding high-frequency components and at least one capacitor for input-impedance matching.

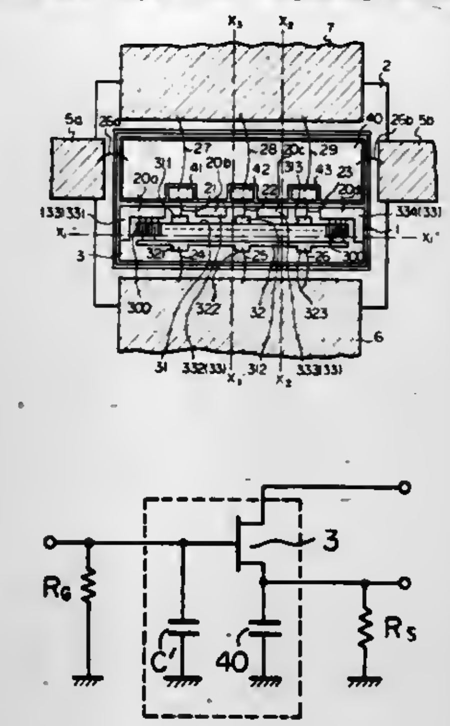

4,298,847
MULTIPOSITION MICROWAVE SWITCH WITH INDEPENDENT TERMINATION
Jerzy Hoffman, Santa Monica, Calif., assignor to Dynatech UZ, Inc., Culver City, Calif.
Filed Apr. 21, 1980, Ser. No. 142,095
Int. Cl.^{3} H01P *1/12*
U.S. Cl. 333—105 **3 Claims**

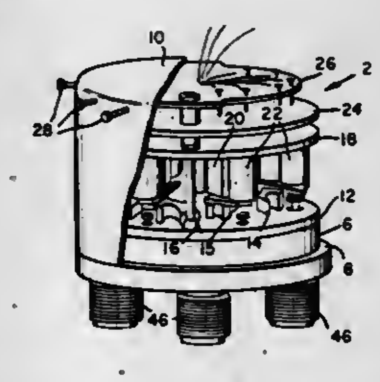

1. A multiposition microwave switch comprising:
(a) an essentially cylindrical metallic housing having a base and a cover plate with a cavity of uniform height disposed therein, said cavity comprising a central portion and a plurality of spaced radial portions of uniform width extending radially therefrom, each said radial portion having an associated leg shorter and of essentially equal uniform width extending acutely from a peripheral end thereof;
(b) a central coaxial connector of predetermined characteristic impedance mounted in said base with its inner conductor extending into and coaxially with said central portion;
(c) a plurality of peripheral coaxial connectors equal in number to no more than said plurality of radial portions, each said peripheral connector having a characteristic impedance equal to that of said central connector and being mounted in said base parallel to said central connector with its inner conductor extending into said peripheral end of one of said radial portions, at the juncture thereof with one end of said leg.
(d) a plurality of termination resistors equal in number to said plurality of peripheral connectors, each said resistor having an impedance equal to the characteristic impedance of said central connector and being mounted in said base and extending into the other end of said leg;
(e) a plurality of first conductors, equal in number to said plurality of peripheral connectors, each switchably disposed in one of said radial portions and of a length sufficient to connect said inner conductor of said central connector to said inner conductor of said peripheral connector when in a first of two switchable positions, and biased to be grounded when in the second of said switchable positions;
(f) a plurality of second conductors, equal in number to said plurality of peripheral connectors, each associated with one of said first conductors and disposed in one of said associated legs and of a length sufficient to connect said resistor to said inner conductor of said peripheral connector when in a complimentary first of two complimentary switchable positions, and biased to be grounded when in the complimentary second of said complimentary switchable positions;
(g) actuating means disposed above said housing for selectively switching said first conductors between said two switchable positions and said second conductors between said two complimentary switchable positions, each said first conductor being in its said first position when its associated said second conductor is in its said complimentary second position, and in its said second position when its associated said second conductor is in its said complimentary first position.

4,298,848
FEEDING DEVICE FOR PRINTED CIRCUIT BOARD AND FEEDING ELEMENT
Hideo Kurose, Zushi, Japan, assignor to Jelmax Co., Ltd., Tokyo, Japan
Filed Nov. 23, 1979, Ser. No. 96,913
Claims priority, application Japan, Dec. 22, 1978, 53-159437; Dec. 22, 1978, 53-159438
Int. Cl.^{3} H01P *7/01, 7/48;* **H01G** *4/32, 1/147*
U.S. Cl. 333—181 **12 Claims**

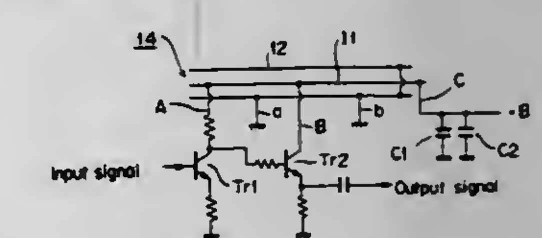

1. A power feeding device for a printed circuit board comprising a distributed capacity element of a plural number of layers comprising:
a first conductive strip and a second conductive strip separated from each other by a low loss dielectric layer,
a plural number of leading-out terminals coupled to the first conductive strip of the distributed capacity element,
at least one leading-out terminal coupled to the second conductive strip of the distributed capacity element,
a power source connected to at least one leading-out terminal of said leading-out terminals of said first conductive strip,
an electrolytic capacitor connected to the power source, and
at least one non-polarized capacitor having a dissipation factor which is intermediate between that of said distributed capacity element and that of said electrolytic capacitor and being connected in parallel with the electrolytic capacitor,
said second conductive strip of the distributed capacity element being connected to a grounding circuit.

4,298,849

DUALL-PASSBAND SURFACE ACOUSTIC WAVE FILTER

Steven H. Arneson, Mesa, Ariz., assignor to Motorola, Inc., Schaumburg, Ill.

Filed Oct. 15, 1979, Ser. No. 85,081

Int. Cl.³ H03H *9/64, 9/70, 9/76*

U.S. Cl. 333—193 **18 Claims**

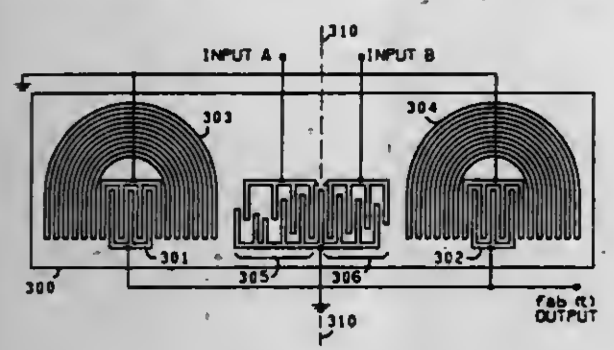

1. A surface acoustic wave (SAW) filter, comprising:

a piezoelectric substrate having at least one surface;

first and second transducer means disposed on the surface of the substrate at a predetermined distance from one another, the first and second transducer means each having a plurality of interdigital fingers; and

third and fourth non-identical transducer means disposed on the surface of the substrate between the first and second transducer means, the substrate having an axis located substantially equidistant between the first and second transducer means, and the third transducer means including a plurality of interdigital fingers disposed substantially to one side of the substrate axis, and the fourth transducer means including a plurality of interdigital fingers disposed substantially to the side opposite said one side of the substrate axis.

4,298,850

DOUBLE RIDGE WAVEGUIDE ROTARY JOINT

Andrew P. Pellerin, Salem, N.H., and Christ Theophile, Bedford, Mass., assignors to Microwave Antenna Systems and Technology Inc., Burlington, Mass.

Filed Apr. 21, 1980, Ser. No. 142,040

Int. Cl.³ H01P *1/06*

U.S. Cl. 333—257 **9 Claims**

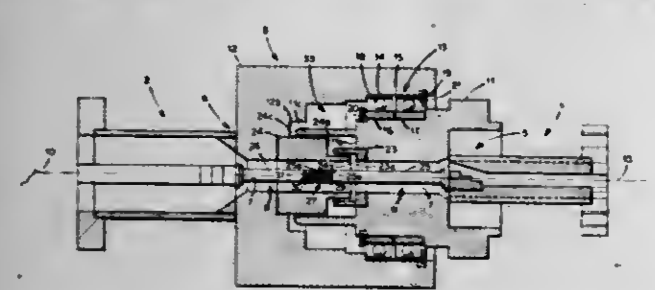

1. A rotary joint transmission line for conducting high frequency electric waves from an input transmission line section to an output transmission line section so that one line section can be mechanically rotated with respect to the other while the high frequency waves are conducted from the input to the output transmission line section comprising,

(a) one of said input and output sections is a ridge waveguide transmission line and both sections are oriented with their electrical axes on a common line,

(b) a coaxial line rotary joint having two parts, an input part and an output part, that fit together mechanically to define a coaxial transmission line at least one part being rotatable on an axis of rotation with respect to the other part coincident with the common line

(c) a transformer section of transmission line oriented with its electrical axis on said common line, rigidly connecting said ridge waveguide transmission line section to one of said parts of the rotary joint,

(d) the cross section profile of the transformer section and the ridge waveguide section where they connect being the same and in registration,

(e) the cross section profile of the transformer section and the one part of the rotary joint where they connect being the same and in registration,

(f) another transformer section of transmission line connecting the other part of the rotary joint to the other transmission line section.

4,298,851

PRESETTABLE TUNING APPARATUS

Hajime Shichijo, Kanagawa; Kenji Yamamoto, Chiba, and Kenichi Nakazawa, Tokyo, all of Japan, assignors to Sony Corporation, Tokyo, Japan

Filed Jun. 20, 1980, Ser. No. 161,520

Claims priority, application Japan, Jun. 22, 1979, 54-79507; Sep. 20, 1979, 54-121340

Int. Cl.³ H03J *5/08;* **H04B** *1/26*

U.S. Cl. 334—11 **9 Claims**

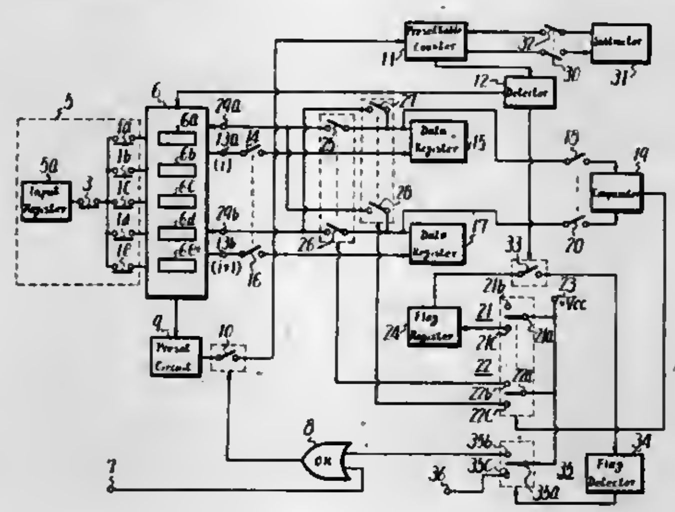

1. A presettable tuning apparatus comprising

tuning means for tuning to a selected radio frequency;

a source of digital signals representing radio frequencies to which the tuning apparatus is selectively tuned;

addressable memory means having a plurality of sequentially addressable storage locations therein for storing selected ones of said digital signals, the storage locations being arranged in a sequential order from lower-address to higher-address storage locations;

write-in means for selectively writing the digital signals from said source into selected ones of said storage locations in said memory means;

comparator means for comparing the digital signals stored in an adjacent pair of said sequentially addressable storage locations and providing a control signal indicating the relative values of the frequencies represented by the digital signals stored in said pair of storage locations; and

means for replacing the digital signals in said pair of storage locations with one another when the control signal of said comparator means indicates that the frequency represented by the digital signal stored in the lower-address one of said pair of storage locations is in a predetermined relationship to the frequency represented by the digital signal stored in the higher-address one thereof;

said presettable tuning apparatus thereby automatically rearranges the particular storage locations, in which digital signals corresponding to the selected radio frequencies are stored, so that the order of such radio frequencies corresponds to the sequential order of said storage locations, notwithstanding that such digital signals can be written at random into said addressable memory means.

4,298,852

CIRCUIT BREAKER WITH INTERCHANGEABLE RATING ADJUSTER AND INTERLOCK MEANS

Alfred E. Maier, Chippewa; Alan B. Shimp, Monroeville, and David J. Uram, Penn Hills, all of Pa., assignors to Westinghouse Electric Corp., Pittsburgh, Pa.

Continuation of Ser. No. 853,940, Nov. 23, 1977, abandoned. This application Aug. 21, 1979, Ser. No. 68,771

Int. Cl.³ H01H *9/24, 33/48;* **H02H** *3/08*

U.S. Cl. 335—6 **16 Claims**

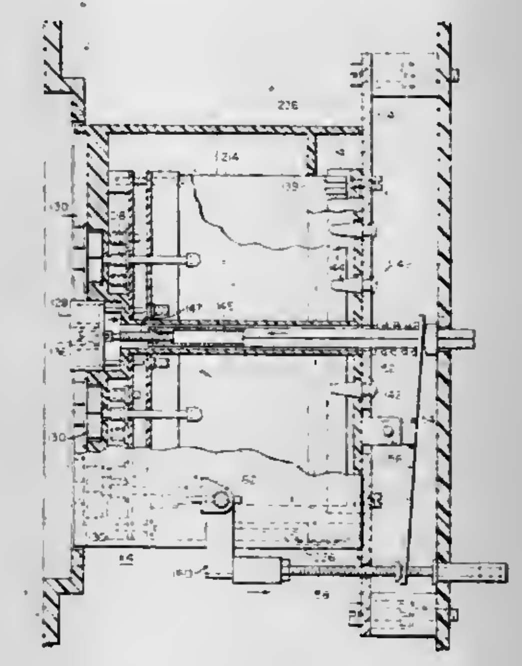

1. A circuit interrupter, comprising:

a housing;

a circuit breaker structure mounted within said housing and comprising a pair of separable contacts operable between open and closed positions to interrupt an electrical circuit releasable means operable from a latched to a tripped position to automatically open said contacts, and an operating mechanism for moving said contacts between open and closed positions;

trip means responsive to current flow through said contacts for actuating said releasable means from the latched to the tripped position to automatically open said contacts upon detection of overcurrent conditions, said trip means comprising a removable interchangeable rating adjuster for determining the level of overcurrent which will cause said trip means to operate; and

interlock means operable between a first position maintaining said releasable means in a tripped position and a second position allowing said releasable means to assume the latched position, said interlock means comprising first mechanical mating means separate from said housing and having a mechanical structure coordinated with the electrical characteristics of said trip means;

said rating adjuster comprising second mechanical mating means having a mechanical structure coordinated with the electrical characteristics of said rating adjuster and positioned to cooperate with said first mating means to operate said interlock means to said second position when a proper rating adjuster electrically compatible with said trip means is fully mounted upon said circuit interrupter;

said first and second mating means cooperating to prevent operation of said interlock means to said second position when a rating adjuster not electrically compatible with said trip means is mounted upon said circuit interrupter.

4,298,853

COMPACT HIGH VOLTAGE SHUNT REACTOR

Sanborn F. Philp, Pittsfield, Mass., assignor to General Electric Company, Schenectady, N.Y.

Filed Mar. 27, 1980, Ser. No. 134,429

Int. Cl.³ H01B *27/24*

U.S. Cl. 336—83 **10 Claims**

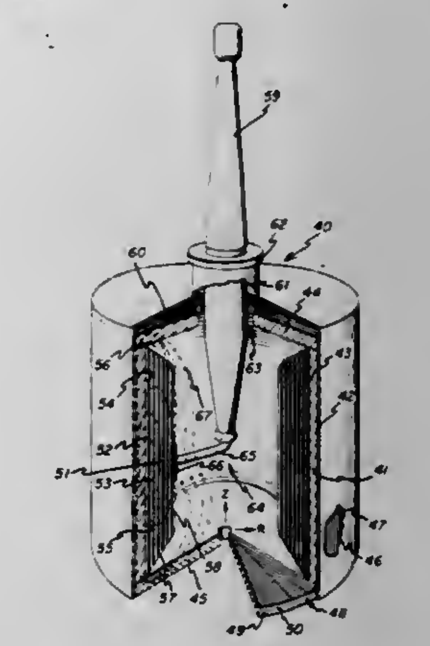

1. A high voltage shunt reactor comprising:

a cylindrical housing;

a magnetic shell comprising an annular ring and two generally circular end plates disposed within said housing; said annular ring comprising a plurality of radially extending, circumferentially adjacent laminations of magnetic material separated by layers of insulation and arranged in said annular ring within said housing; each of said end plates comprising a plurality of wedge-shaped members bonded together; and each of said wedge-shaped members comprising a plurality of laminations of magnetic material separated by layers of electrical insulation and bonded thereto to form said wedge-shaped members;

a coil of electrical conductor wound concentrically inside said shell and being hollow to form a nonmagnetic core disposed concentrically inside said coil and constituting a reactance volume; and

a high voltage bushing extending through one axial end of said housing and through one of said end plates and into said core; said bushing having a high voltage conductor passing therethrough and making electrical contact with the radially innermost layer of said winding.

4,298,854

COMBINED SWITCH AND FUSE HOLDER

James H. Andersen, 8045 E. Mercer Way, Mercer Island, Wash. 98040

Filed Jun. 12, 1980, Ser. No. 158,936

Int. Cl.³ H01H *85/22*

U.S. Cl. 337—10 **14 Claims**

1. A combination cartridge fuse holder and switch comprising:

a first contact bar and a second contact bar having upper edges, and having first ends,

a first terminal and a second terminal,

body means defining a cartridge fuse receptacle and a pair of contact bar receiving means, said contact bar receiving means being spaced and constructed to receive said first and second contact bars so that the upper edges are spaced from each other and so that the upper edges lie substantially in a contact plane, said body means further defining a ramp inclined relative to said contact plane and intersecting said contact plane adjacent the first ends of said contact bars, said first and second terminals being mounted on said body means,

first connecting means for placing said first contact bar in electrical connection with said first terminal,

second connecting means for placing said second contact bar in electrical connection with one end of said fuse receptacle so that when a cartridge fuse is positioned in said receptacle, one end of said fuse is in electrical contact with said second contact bar,

third connecting means for placing said second terminal in

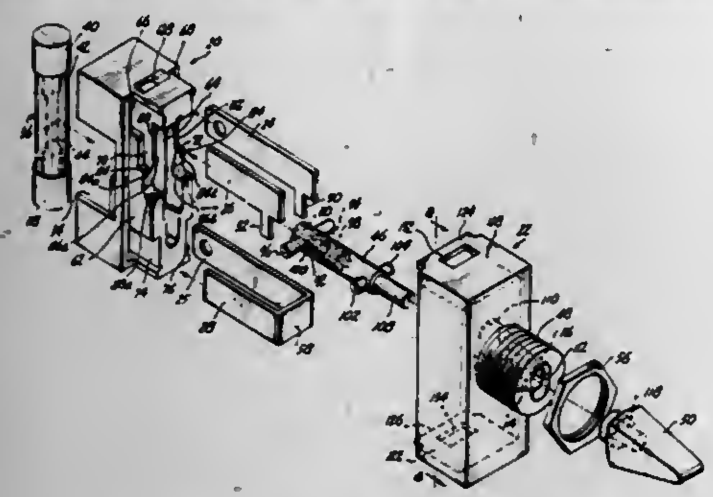

electrical connection with the other end of said fuse receptacle so that when a cartridge fuse is positioned in said receptacle, the other end of said fuse is in electrical contact with said second terminal, and

a contact pin, and holder means associated with the body means for moving said contact pin from said ramp on and off the upper edges of said contact bars to make and break contact between said first and second terminals when a cartridge fuse is positioned in said fuse receptacle.

4,298,855

CONDUCTIVE POLYMER FILM HUMIDITY SENSOR

Frank S. Mills, Minneapolis, Minn., assignor to Honeywell Inc., Minneapolis, Minn.

Filed Aug. 26, 1980, Ser. No. 181,507

Int. Cl.³ H01L *7/00*

U.S. Cl. 338—35 **9 Claims**

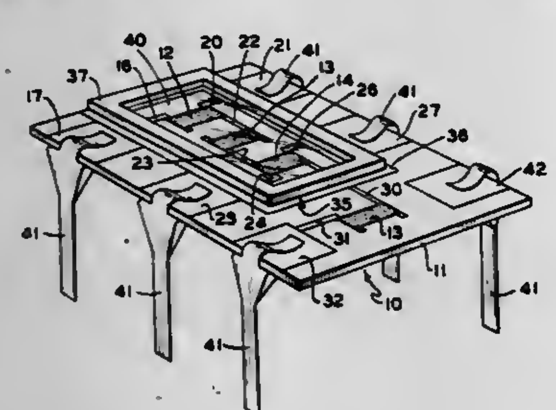

1. A humidity sensor utilizing a conductive polymer film, including: self-supporting insulating substrate means which is unaffected by humidity; polymer film resistor means deposited upon said substrate means with said resistor means including a plurality of resistors; conductive connection means deposited upon said substrate means to interconnect said resistors in electric circuit means; said conductive connection means further including conductive areas connected to said resistors to form a plurality of terminals which are adapted to be used to connect said resistors in a bridge; hermetically impervious housing means mounted on and sealed to said substrate to form hermetically sealed chamber means; said chamber means enclosing all but one of said resistors in said chamber means; and said one unenclosed resistor being exposed to an ambient atmosphere whose humidity is to be measured by said unenclosed resistor varying in resistance value with the ambient humidity for comparison with a fixed dew point present in said sealed chamber means.

4,298,856

METALLIZED RESISTOR AND METHODS OF MANUFACTURING AND ADJUSTING THE RESISTANCE OF SAME

Donald W. Schuchardt, Glen Ellyn, Ill., assignor to Western Electric Company, Incorporated, New York, N.Y.

Filed Sep. 4, 1979, Ser. No. 72,371

Int. Cl.³ H01C *10/00*

U.S. Cl. 338—195 **26 Claims**

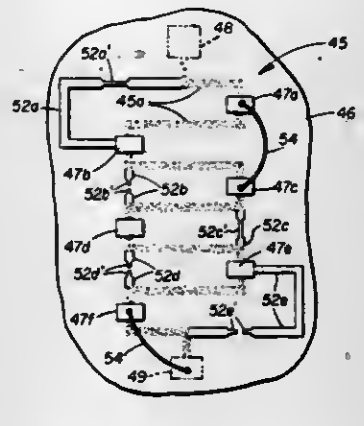

1. An adjustable planar configured resistor comprising: insulative support mean;

a relatively thin layer of resistive material formed in a desired configuration on, and supported by, said support means, said resistive layer defining the main body portion of said resistor, and having at least two conductive terminals connected to end regions thereof for completing electrical connections to said main body portion, said body portion comprising a thin-film layer of resistive material formed into a series of closely spaced, serially connected segments arranged in a serpentine configuration;

a plurality of conductive bonding pads formed as an integral part, and on the upper side, of respective discrete areas of said thin film resistor body portion between at least said two terminals thereof, said bonding pads being of sufficient cross section to allow conductive short-circuiting interconnections to be made between different selected pairs thereof, after fabrication of the resistor, whenever necessary to reduce the initial nominal value of resistance of said resistor to a lower desired value.

4,298,857

BRAKE WEAR INDICATOR SYSTEM

Ronald F. Robins, Southend-on-Sea, and Jaan Lindre, Benfleet, both of England, assignors to Ford Motor Company, Dearborn, Mich.

Filed Feb. 1, 1980, Ser. No. 117,898

Int. Cl.³ B60T *17/22*

U.S. Cl. 340—52 A **6 Claims**

1. A motor vehicle brake warning system including a brake pad comprising:

a layer of friction material having a face operably engageable to a braking surface;

signal means operably embedded in said friction material for producing a first warning signal when the layer of friction material has abraded a predetermined amount and a second distinctive warning signal when the layer of friction material has further abraded beyond said predetermined amount;

said signal means comprising:

an electrical contact embedded in part into the layer of friction material such that said electrical contact comes in contact with an electrically grounded braking surface when said layer of friction material has abraded said predetermined amount and said brake pad is applied to said braking surface;

an electric circuit connectable to said electrical contact and being actuated when said electrical contact comes into contact with said braking surface to produce said first signal;

said electrical contact comprising:

two terminal portions electrically insulated from each other;

a connecting portion electrically connecting the two terminal portions;

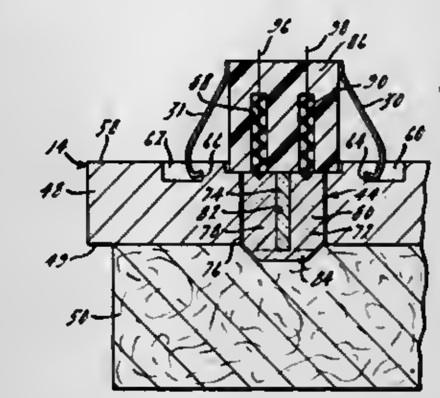

said connecting portion being located wholly embedded within said layer of friction material such that said connecting portion comes into contact with the braking surface when said brake pad is applied to said braking surface after said layer of friction material has abraded a predetermined amount to produce said first signal, and said connecting portion becomes totally abraded when said layer of friction material has further abraded beyond said first predetermined amount to electrically disconnect said first terminal portion from said second terminal portion to produce said second signal.

4,298,858

METHOD AND APPARATUS FOR AUGMENTING BINARY PATTERNS

John G. Romanski, Kingsville, Md., assignor to The United States of America as represented by the Secretary of the Air Force, Washington, D.C.

Filed Mar. 27, 1980, Ser. No. 134,718

Int. Cl.³ G06K *9/52*

U.S. Cl. 340—146.3 MA **4 Claims**

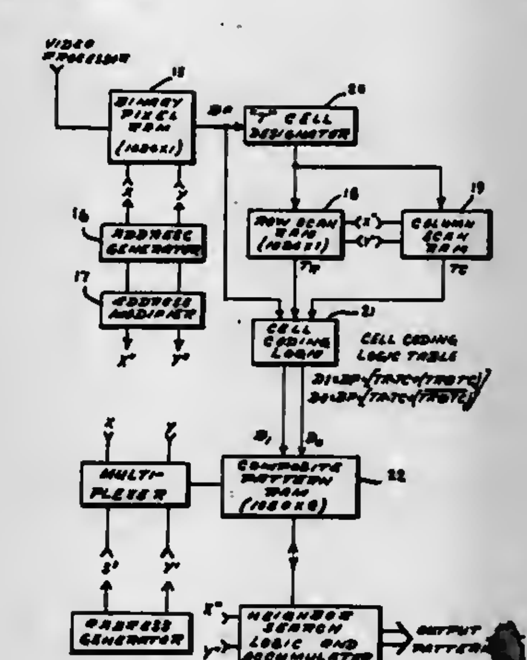

1. An augmented pattern generator for providing a pattern of binary PIXELS having discrete numerical values from a simple binary pattern of "1" and "0" type PIXELS arranged in rows and columns, said augmented pattern generator comprising

a binary pattern memory receiving simple binary pattern "1" and "0" type PIXEL data,

a "T" type PIXEL designator circuit locating and designating as "T" type PIXELS the PIXELS at the edge of each contiguous group of "1" type PIXELS in the rows and columns of the simple binary pattern, the simple binary pattern PIXELS being sequentially clocked out of said binary pattern memory and scanned by said "T" type PIXEL designator circuit by rows and columns,

a PIXEL coding logic circuit receiving "0" and "1" type PIXELS from said binary pattern memory and "T" type PIXELS from said "T" type PIXEL designator circuit and locating and designating "P" type PIXELS therefrom, said "P" type PIXELS being created by the Exclusive Or of the "1" type PIXELS in row and column scan intermediate patterns, said PIXEL coding logic circuit also coding "1," "0," "T" and "P" PIXEL types,

a composite pattern memory receiving the coded output of said PIXEL coding logic circuit,

a neighbor search logic circuit accessing said composite pattern memory and processing each PIXEL received therefrom by assigning thereto a numerical value that is a function of that PIXEL'S type and the type of its four near neighbor PIXELS, and

an accumulator receiving the output of said neighbor search logic circuit.

4,298,859

DIGITAL VIDEO LINE DELAY CIRCUIT

Michal M. Feilchenfeld, Pittsburgh, Pa., assignor to Westinghouse Electric Corp., Pittsburgh, Pa.

Filed May 21, 1980, Ser. No. 151,861

Int. Cl.³ G06K *7/016*

U.S. Cl. 340—146.3 Z **7 Claims**

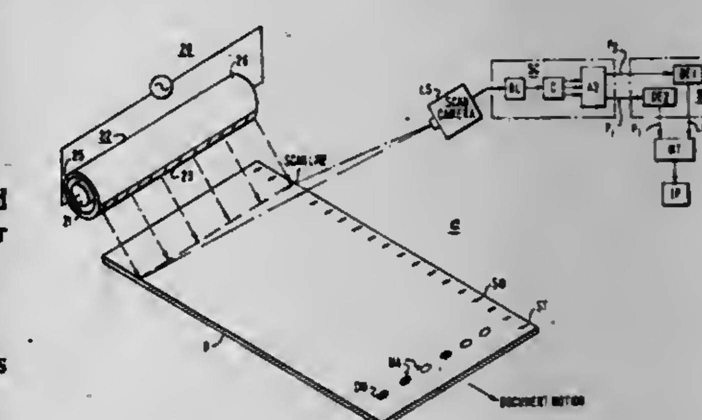

1. In an optical reading system having a line scan camera for scanning a document on a line-by-line basis and generating an analog signal for each video scan line indicative of information appearing on the document, said document having preprinted scan marks for document verification or registration and data entry mark areas for accepting information such as a student test answer sheet, a voting ballot, an order entry form, etc., an analog-to-digital converter means for converting the analog signal to a digital signal, and a totalizer circuit means for summing the digital signals corresponding to each of the mark areas and storing this information for processing,

the improvement for rendering the system compatible with both a preprinted document format that has a scan mark preceding the first data entry mark areas, and a preprinted document format that has data entry mark areas preceding the first scan mark, the improvement comprising:

a video scan line delay means connected between said analog-to-digital converter means and the totalizer circuit means, said delay means including a zero line delay for transmitting the digital output of the analog-to-digital converter means without any delay, and one or more line delay circuits, each producing a digital delay output signal

corresponding to a different predetermined number of line delays of the digital output signal of said analog-to-digital converter means, and

a delay select means for selecting one of said outputs of said video scan line delay means for transmission to said totalizer circuit means, the zero line delay circuit output being selected for a document format wherein a scan mark precedes the first data entry mark areas, in the event the document format consists of data entry mark areas preceding the first scan mark, said delay select means selecting the digital delay output of the line delay circuit which produces a sufficient number of line delays in the transmission of the digital signals from said analog-to-digital converter means to said totalizer circuit means to prevent the loss of information appearing in the data entry mark areas preceding the first scan mark or appearing during the line scan verification of a scan mark.

4,298,860

MONITOR AND CONTROL APPARATUS

Gayle R. Norberg, Columbia Heights, and Lee R. Hartung, Coon Rapids, both of Minn., assignors to Control Data Corporation, Minneapolis, Minn.

Filed Mar. 10, 1980, Ser. No. 129,054

Int. Cl.³ H04Q *9/00*

U.S. Cl. 340—825.04 **29 Claims**

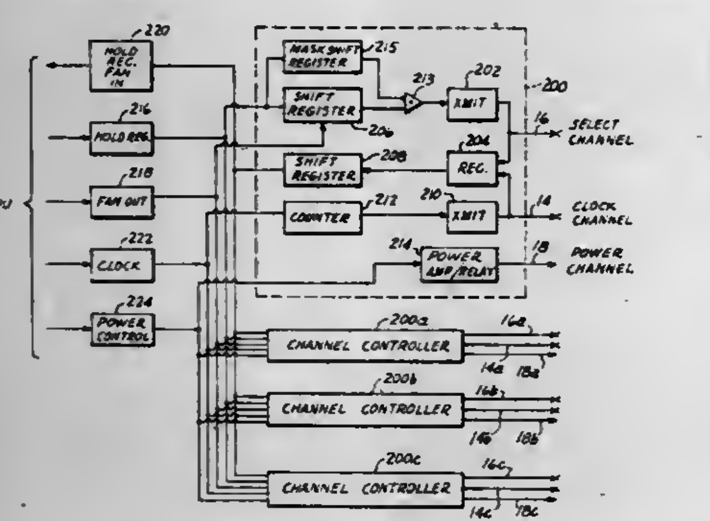

1. In a command and monitoring system having a central station and a plurality of remote stations, a remote station comprising: counter means having a plurality of output states; address means connected to a first plurality of said output states of said counter means for establishing a unique address for said remote station; clock channel means connecting said counter means to said central station for supplying clock signals to said counter means for sequencing said counter means through its output states; select channel means connected between said central station and said remote station, said central station supplying select signals onto said select channel means; monitor means for receiving a plurality of monitor condition signals, said monitor means being connected to a second plurality of said output states of said counter means other than said first plurality of said output states; transmitter means connected to said address means and to said monitor means for transmitting address and monitor data onto said select channel means; control means connected to said select channel means and to said second plurality of said output states of said counter means and responsive to a select signal when said counter means has conditioned one of its respective second output states for operating a corresponding command function at said remote station; disable means for selectively disabling said control means; and selective means connected to said address means and said select channel means and responsive to the unique address for the remote station and to select signals on said select channel means to operate said disable means whenever such select signals correspond to an address other than the address for the respective remote station.

4,298,861

INTEGRATED ULTRASONIC MAGNETIC ENCODER

Jacob Tellerman, Bayside, N.Y., assignor to Temposonics, Incorporated, Plainview, N.Y.

Filed Jul. 10, 1978, Ser. No. 922,819

Int. Cl.³ G06F *3/02*

U.S. Cl. 340—365 L **12 Claims**

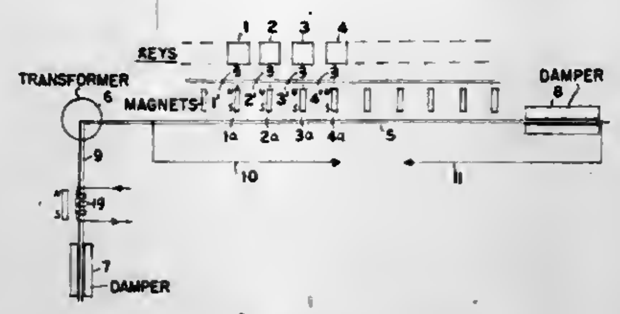

1. A keyboard encoding system comprising,

a plurality of movable magnetic keys,

a waveguide located in relation to the keys so that the magnetic field of the keys may be moved into operative magnetic engagement with the waveguide,

means to apply a pulse to said waveguide whereby when one of the keys is moved into magnetic engagement with said waveguide, a signal will be produced, said signal being delayed relative to the applied pulse so that the key can be identified.

4,298,862

AMORPHOUS ANTIPILFERAGE MARKER

John A. Gregor, Basking Ridge, N.J., and Gregory J. Sellers, Richmond, Va., assignors to Allied Chemical Corporation, Morris Township, Morris County, N.J.

Filed Apr. 23, 1979, Ser. No. 32,196

Int. Cl.³ G08B *13/26*

U.S. Cl. 340—572 **7 Claims**

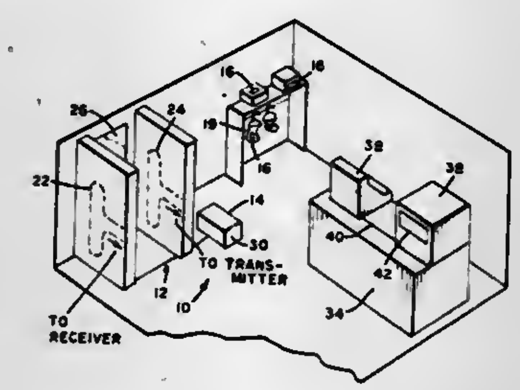

1. For use in a magnetic theft detection system, a marker adapted to generate magnetic fields at frequencies that are harmonically related to an incident magnetic field applied within an interrogation zone and have selected tones that provide said marker with signal identity, said marker being an elongated, ductile strip of amorphous ferromagnetic material and retaining its signal identity after being flexed or bent.

4,298,863

PORTABLE PATIENT CALL

Donald P. Natitus, Aurora, and Curt T. Carlson, Denver, both of Colo., assignors to St. Anthony Hospital Systems, Denver, Colo.

Filed Feb. 10, 1980, Ser. No. 117,615

Int. Cl.³ G08B *21/00*; A61B *5/10*

U.S. Cl. 340—573 **13 Claims**

1. A self-contained, electrically isolated patient call device which can be used by a patient having limited muscular movement, said device comprising:

a battery energy power source which is of low voltage to prevent electrical shock;

electrical switch means arranged in conjunction with a pneumatic actuation means which permits the making and breaking of electrical contacts in response to the movement of said pneumatic means;

means for positioningly adjusting the relationship of the switch means with respect to said pneumatic means whereby the sensitivity of the actuation of said switch means with the movement of the pneumatic means can be precisely adjusted;

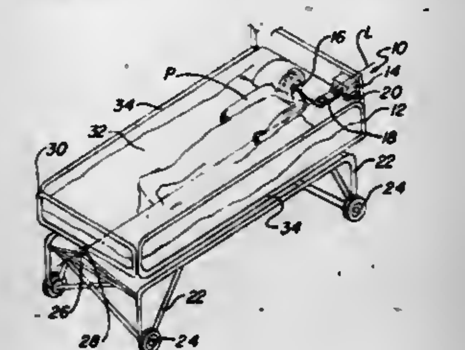

alarm means connected to said electrical switch means and powered by said battery power source whereby when said contacts are made, an alarm signal is generated for alerting persons to the needs of said patient; and

an open pneumatic transducer means arranged in juxtiposition to a portion of the patient's body and connected by a tube means to said pneumatic actuation means whereby a minor muscular movement by said patient will cause the pneumatic actuation means to energize said contact means to produce said alarm signal.

4,298,864

POWER LINE FAULT DETECTOR CIRCUIT

Earl A. Mahnke, Eastlake, and Christopher J. Zoller, Painesville, both of Ohio, assignors to The Ericson Manufacturing Company, Willoughby, Ohio

Filed Dec. 14, 1979, Ser. No. 103,460

Int. Cl.³ G08B *21/00*; H02H *3/16*

U.S. Cl. 340—657 **12 Claims**

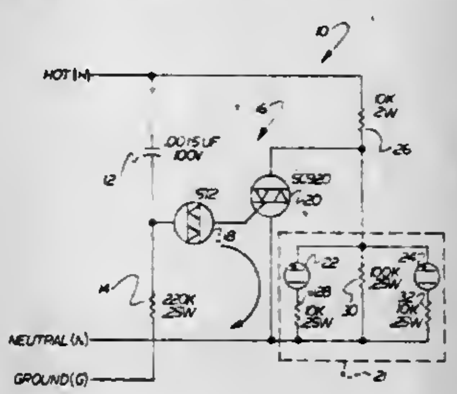

1. Apparatus for connection to the hot, neutral and ground conductors of a power line for detecting faulty power line connections and providing an indication thereof, comprising:

first and second impedances connected in series between said hot and ground conductors, said first impedance being capacitive and connected to said hot conductor, and the values of said impedances being selected so that the voltage at the junction thereof does not exceed a preselected limit with respect to said neutral conductor unless said power line is faulted,

trigger means connected betwen said neutral conductor and said junction for determining when the voltage therebetween has exceeded said preselected limit, said trigger means switching from a high impedance to a low impedance when said limit is exceeded, whereby a surge of current passes through said trigger means whenever said limit is exceeded, and,

means for detecting said surges of current for then indicating that said power line is faulted.

4,298,865

DISPLAY DEVICE FOR ELECTRONIC CALCULATOR OR THE LIKE

Sigeaki Masuzawa, Nara; Mituhiro Saiji, Kyoto, and Akira Tanimoto, Kashihara, all of Japan, assignors to Sharp Kabushiki Kaisha, Osaka, Japan

Filed Jul. 18, 1979, Ser. No. 58,666

Claims priority, application Japan, Jul. 26, 1978, 53-91686

Int. Cl.³ G06F *3/14*

U.S. Cl. 340—706 **18 Claims**

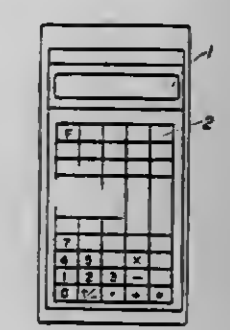

1. An electronic calculator comprising:

calculating means for performing arithmetic operations and for producing an output representative of the results of these operations;

prompting means for generating signals representative of operating instructions for instructing the user of procedures used by said calculating means;

a multiple character display;

first means for converting the output of said calculating means into a display signal to statically display the results of said arithmetic operations of said multiple character display; and

second means for converting the signals generated by said prompting means into alphanumeric display signals to generate a running display of said operating instructions on said multiple character display.

4,298,866

LIQUID CRYSTAL DISPLAY DEVICE HAVING CAPACITANCE COMPENSATION

Andreas M. L. Hodemaekers, Eindhoven, Netherlands, assignor to U.S. Philips Corporation, New York, N.Y.

Filed Nov. 5, 1979, Ser. No. 91,429

Claims priority, application Netherlands, Dec. 15, 1978, 7812214

Int. Cl.³ G06F *3/14*

U.S. Cl. 340—713 **7 Claims**

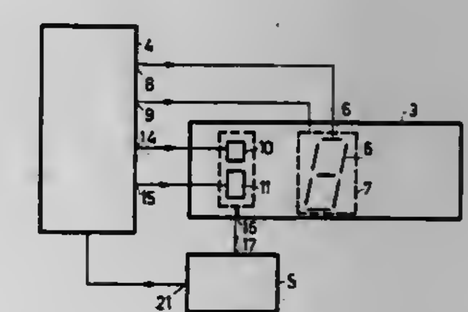

1. A display device comprising

a display screen having a plurality of display elements and a measuring element, said display screen comprising a liquid crystal enclosed between a first and a second cover plate each having a plurality of excitation electrodes for applying electric display drive voltages to said display elements and for applying an electric measuring device voltage to said measuring element;

an excitation circuit for generating said display drive voltages and said measuring drive voltage;

a control circuit having at least a measuring input for an electric measuring signal, said measuring input being cou-

pled to one of said excitation electrodes of said measuring element, and at least a control output for an electric control signal,

said control circuit adjusting amplitudes of said display drive voltages and of said measuring drive voltage to a value corresponding to the threshold voltage of the liquid crystal in response to impedance variations of said measuring element resulting from temperature and voltage dependence of said liquid crystal,

characterized in that said display screen also comprises an auxiliary measuring element which differs in size from said measuring element, said auxiliary measuring element being arranged in series with said measuring element, said series arrangement having ends coupled to said excitation circuit for supplying said measuring drive voltage, and the junction of the measuring element and the auxiliary measuring element being coupled to said measuring input of said control circuit.

4,298,867

CATHODE RAY TUBE CHARACTER SMOOTHER

Philip V. C. Craig, Hunter, Utah, assignor to System Concepts, Inc., Salt Lake City, Utah

Filed Jul. 6, 1979, Ser. No. 55,688

Int. Cl.³ G08B 5/36

U.S. Cl. 340—728 **13 Claims**

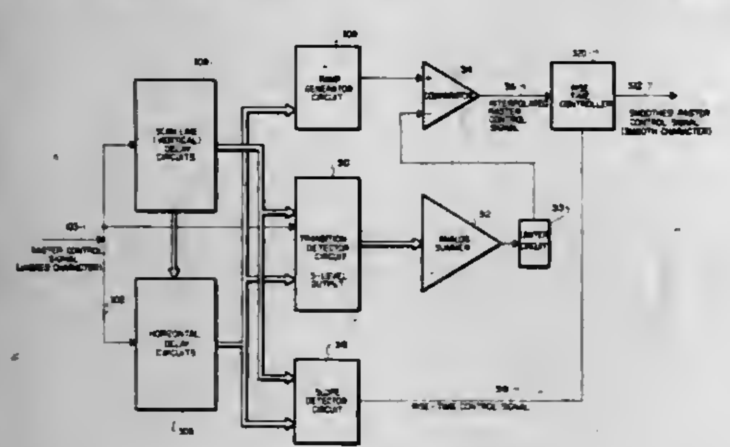

1. A character smoother apparatus for use in a display system or the like which incorporates horizontal timing signals to sweep and return a scanning beam or the like within a time T_s horizontally across a display screen along one of a plurality of horizontal scan lines, vertical timing signals to position the beam vertically at the beginning of an appropriate horizontal scan line, and character generation circuitry to generate a raster control signal that inhibits the sweeping beam in time increments of T_c and in a patterned sequence to form characters on the screen, T_c being the character resolution time, said character smoother apparatus comprising

vertical delay means for delaying said raster control signal one or more time periods T_s to produce as first output signals a plurality of delayed raster control signals;

horizontal delay means for delaying said raster control signal and said first output signals for periods of time corresponding to T_c or an integral multiple thereof to produce a plurality of second output signals; and

interpolation means for combining said first and second output signals and said raster control signal to produce an interpolated raster control signal that is resolved in time increments which are less than T_c, said interpolation means including

transition detector means for generating a first transition indicator signal for each positive transition (beam not inhibited) of said raster control signal, said first output signals, and said second output signals, and a second transition indicator signal for each negative transition (beam inhibited) of said raster control signal, said first output signals, and said second output signals;

summing means for combining said first transition indicator signals with said second transition indicator signals to produce a composite transition indicator signal representing the net sum of all transitions, positive transitions adding and negative transitions subtracting, occurring in said raster control signal and said first and second output signals at a given T_c increment;

ramp generating means for generating a positive going ramp signal that starts at a minimum voltage level and increases in a certain time to a maximum voltage level for each positive transition (beam not inhibited) of one of said second output signals, and a negative going ramp signal that starts at said maximum voltage level and decreases in said certain time to said minimum voltage level for each negative transition (beam inhibited) of said second output signal; and

comparator means for comparing said composite transition indicator signal with said positive or negative going ramp signal and for producing an interpolated raster control signal that is high (beam not inhibited) whenever said ramp signal is a higher level than said composite transition indicator signal, and low (beam inhibited) whenever said ramp signal is a lower level than said composite transition indicator signal, said interpolated raster control signal thus being resolved in time increments which are less than T_c.

4,298,868

ELECTRONIC DISPLAY APPARATUS

John R. Spurgeon, 4407 Pack Saddle Pass, Austin, Tex. 78745

Filed Apr. 11, 1980, Ser. No. 139,178

Int. Cl.³ G08B 5/36

U.S. Cl. 340—755 **9 Claims**

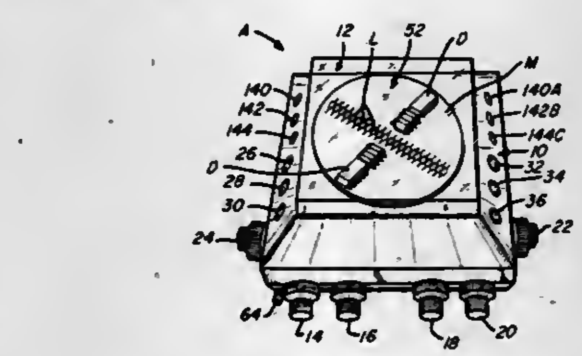

1. An electronic display apparatus, comprising:

(a) a disk member;

(b) a plurality of light emitting means mounted with said disk member;

(c) means for rotating said disk member; and

(d) electronic control circuit means for selectively activating said plurality of light emitting means to selectively form differing visual images for viewing, said circuit means comprising:

(1) input means for forming an electronic control signal defining the pattern, position, size and shape of the visual images to be formed as specified by a user; and

(2) decoder means for decoding the electronic control signals to selectively activate said plurality of light emitting means to form the specified visual images.

4,298,869

LIGHT-EMITTING DIODE DISPLAY

Yasuo Okano, Sendai, Japan, assignor to Zaidan Hojin Handotai Kenkyu Shinkokai, Sendai, Japan

Filed Jun. 25, 1979, Ser. No. 52,014

Claims priority, application Japan, Jun. 29, 1978, 53-79618

Int. Cl.³ G08B 5/36

U.S. Cl. 340—782 **40 Claims**

1. A light-emitting diode (LED) lamp comprising:

a housing including a lamp base of a predetermined shape adapted for effecting electrical connection to a commercial AC power source, said AC power source having a predetermined maximum voltage;

a current-regulating means electrically connected to said lamp base and disposed in said base to facilitate dissipation of heat generated by said current-regulating means through said base; and

a display panel connected mechanically to said housing and

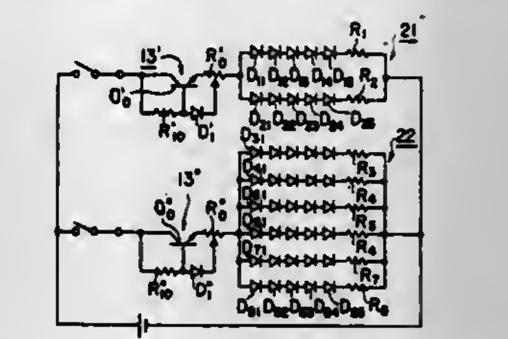

electrically to said current regulating means and including a multiplicity of light-emitting diodes, groups of said diodes being connected in series, said series connected group having an operating threshold voltage at least about one half of said predetermined maximum voltage said groups being electrically connected in parallel said multiplicity of light emitting diodes being driven simultaneously by the current from said regulating means.

4,298,870

DEVICE FOR DRIVING A DISPLAY ELEMENT HAVING A MEMORIZING PROPERTY

Takashi Saegusa, Sagamihara, Japan, assignor to Nippon Kogaku K.K., Tokyo, Japan

Filed Oct. 9, 1979, Ser. No. 82,884

Claims priority, application Japan, Oct. 9, 1978, 53-123565

Int. Cl.³ G02F 1/17

U.S. Cl. 340—785 **8 Claims**

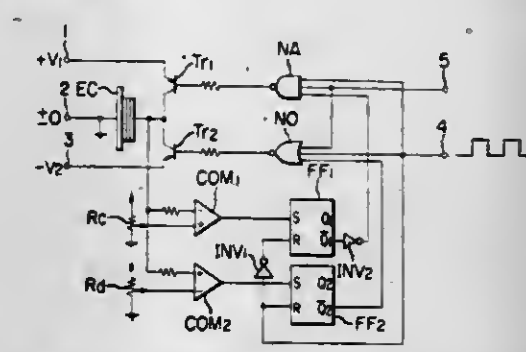

1. A device for controlling an electro-optical display element of the type which is capable of storing charge, the display element being in a colored state upon the application thereto of a first polarity voltage for storing a first quantity of charge and being in a colorless state upon the application thereto of an opposite polarity voltage for storing a second quantity of charge, the display element remaining in said states for predetermined periods of time after removal of said voltages, comprising means for detecting the quantity of charge stored in the display element, the detecting means including a first detecting circuit for producing a first signal when the quantity of charge stored differs from a first predetermined range of values required for the display element to be in the colored state, and a second detecting circuit for producing a second signal when the quantity of charge stored differs from a second predetermined range of values required for the display element to be in the colorless state, and drive means for applying said voltages to the display element, the drive means including a first driving circuit for applying the first polarity voltage to the display element in response to the first signal and to the occurrence of a display command signal, and a second driving circuit for applying said other polarity voltage to the display element in response to the second signal and to the non-occurrence of the display command signal.

4,298,871

DESIRED SIGNAL ESTIMATOR FOR NULL STEERER FM RECEPTION USING FSK MODULATION

Peter D. Kennedy, Mesa, and Gregory H. Piesinger, Scottsdale, both of Ariz., assignors to Motorola Inc., Schaumburg, Ill.

Continuation-in-part of Ser. No. 910,935, May 30, 1978, abandoned. This application Jan. 11, 1979, Ser. No. 47,610

Int. Cl.³ H01Q 3/26

U.S. Cl. 343—100 SA **7 Claims**

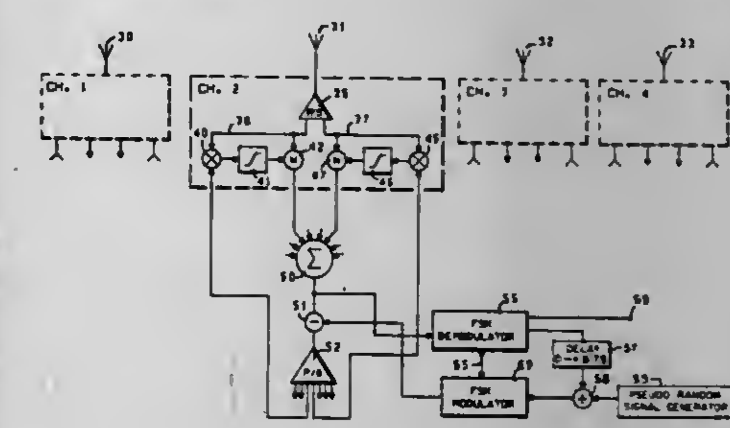

1. In a multiple antenna array, null steering apparatus for reception of a desired signal wherein an identifier signal is transmitted with the desired signal, the desired signal including bits of data delayed a predetermined period relative to the identifier signal and the identifier signal including the bits of data summed with a pseudo random signal and substantially reduced in amplitude relative to the desired signal, said desired signal and said identifier signal being summed and utilized to FSK modulate a carrier prior to transmission, said null steering apparatus comprising:

(a) feedback means associated with each antenna in said array for adjusting the amplitude and phase of signals therein so that unwanted signals from the array are cancelled;

(b) demodulation means, including normal delay, coupled to said feedback means for removing the carrier and separating the desired signal from the identifier signal;

(c) pseudo random signal generating means for providing an output signal substantially similar to the pseudo random signal in the transmission;

(d) combining means coupled to the demodulation means for receiving the identifier signal and coupled to the generating means for subtracting the pseudo random signal from the identifier signal;

(e) delay means incorporated into said apparatus, in addition to said normal delay in said demodulation means, for delaying the separated identifier signal sufficient to bring the identifier signal substantially into phase with the desired signal; and

(f) modulation means coupled to said combining means and said feed back means for receiving the delayed bits of data remaining in said identifier signal and FSK modulating a carrier therewith to supply a reference signal substantially in phase with the desired signal to said feedback means to form a lobe in the antenna pattern in the direction of the desired signal.

4,298,872

SIDELOBE BLANKING SYSTEM

William E. Rodgers, Simi Valley, Calif., assignor to Hughes Aircraft Company, Culver City, Calif.

Filed May 27, 1980, Ser. No. 153,284

Int. Cl.³ H04B 7/00

U.S. Cl. 343—100 LE **1 Claim**

1. In a radar system including main antenna means for re-

ceiving electro-magnetic energy from a target and circuit means coupled to said main antenna means for generating tracking signals corresponding to the position of said target relative to said main antenna means, an improved sidelobe blanking system comprising:
guard antenna means for receiving electro-magnetic energy reflected from a target in a sidelobe region of said main antenna means;
first phase shifting means operably coupled to the said main antenna means and for shifting the output thereof by 90°;
first summing means for summing the outputs of said guard antenna means and said first phase shifting means;

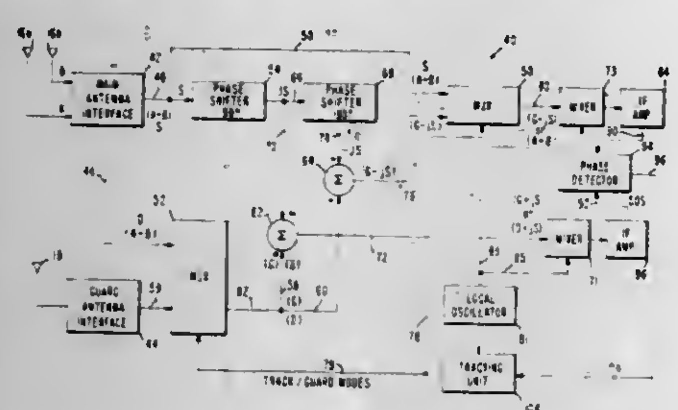

second phase shifting means coupled to the output of said first phase shifting means for shifting the output thereof by 180°;
second summing means for summing the outputs of said guard antenna means and said second phase shifting means;
phase detector means for generating an output signal corresponding to the phase angle between the outputs of said first and second summing means; and
means for generating a signal which represents the cosine of the output of said phase detecting means.

4,298,873
ADAPTIVE STEERABLE NULL ANTENNA PROCESSOR
Eugene L. Roberts, Maitland, Fla., assignor to The United States of America as represented by the Secretary of the Army, Washington, D.C.
Filed Jan. 2, 1981, Ser. No. 222,104
Int. Cl.³ H04B ***7/00***
U.S. Cl. 343—100 SA **11 Claims**

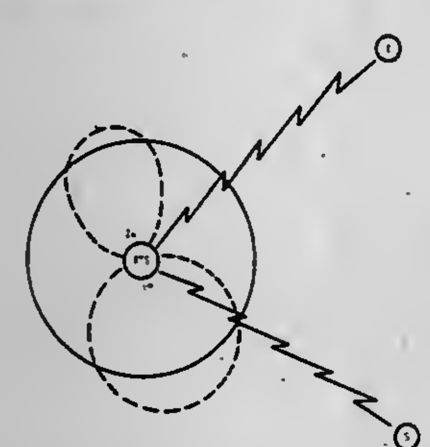

1. A steerable null antenna processor system for receiving desired wave energy signals from at least one angular region of space within the area covered by the system and for suppressing interfering signals from at least one other angular region, using antenna means having at least first and second antenna elements; said processor system comprising:
nulling means coupled between said antenna elements and a common port for supplying said desired wave energy signals to said common port;
said nulling means comprising phase means and amplitude means, both the phase means and the amplitude means being adjustable in incremental steps and having control inputs, operative in response to control signals at the control inputs to adjust respectively the phase and amplitude values of the nulling means; the amplitude means being a variable ratio combiner comprised of a quadrature hybrid, a sum-difference hybrid, and two adjustable delay lines between said hybrids;
digital controller means having clock means, sample storage means, comparison means, feedback input means, and phase and amplitude memory means having connections to said control inputs of the phase and amplitude means respectively; there being apparatus between said common port and the feedback input means which supplies feedback signals containing a representation of the level of the interfering signal at the common port; the clock means supplying clock signals to provide successive cycles, the comparison means being connected and operative during each cycle to compare a feedback signal from the feedback input means to a previous sample thereof stored in said sample storage means to indicate improvement or no improvement, and to supply said control signals via said memory means to said nulling means to make an appropriate adjustment for steering at least one null to the interfering signals.

4,298,874
METHOD AND APPARATUS FOR TRACKING OBJECTS
Jack Kuipers, Grand Rapids, Mich., assignor to The Austin Company, Cleveland, Ohio
Continuation-in-part of Ser. No. 759,723, Jan. 17, 1977, abandoned, which is a continuation-in-part of Ser. No. 733,353, Oct. 18, 1976, abandoned, and a continuation-in-part of Ser. No. 952,263, Oct. 18, 1978, abandoned, which is a continuation of Ser. No. 759,723. This application Oct. 24, 1978, Ser. No. 954,126
Int. Cl.³ G01S ***3/02***
U.S. Cl. 343—112 R **70 Claims**

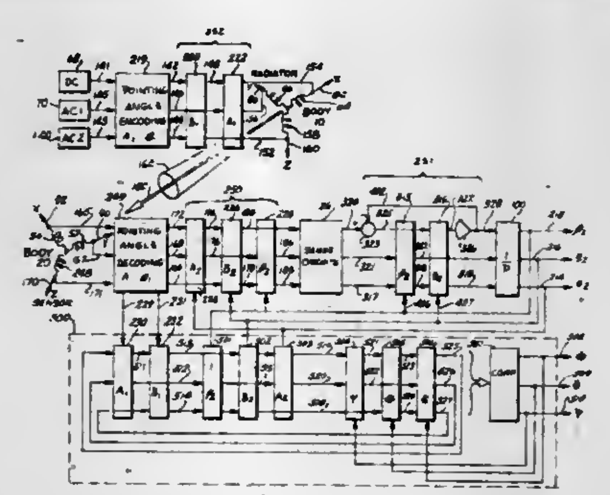

1. Apparatus for determining a pointing angle to a first body from a second body comprising:
at least two independently oriented first body radiating means coupled to said first body and defining a first reference coordinate frame;
a first means for applying to said first body radiating means first actuating signals for producing a first field radiated in response to said first signals oscillating along a first line of generation and characterizing a first body pointing angle of a first pointing vector with respect to said first reference frame, said first field having receivable components characterized in that at said second body one direction in said first field has unique characteristics with respect to all other directions in said first field;
at least two independently oriented second body receiving means coupled to said second body and defining a second reference coordinate frame for detecting and measuring the receivable components of said first field; and
a second body analyzing means coupled to said second body receiving means for converting said first field components into a second body pointing angle, from said second body to said first body, relative to said second reference coordinate frame.

4,298,875
AIRCRAFT COLLISION AVOIDANCE SYSTEM
Roger M. Sullivan, Colorado Springs, Colo., assignor to Leo K. O'Brien and Thomas B. Carney, both of Colorado Springs, Colo.
Filed Feb. 2, 1979, Ser. No. 9,829
Int. Cl.³ G01S ***3/02, 1/10***
U.S. Cl. 343—112 CA **15 Claims**

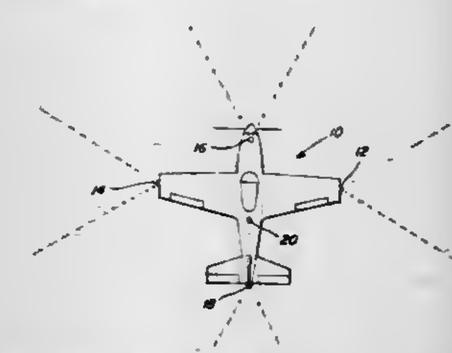

9. An aircraft collision avoidance system for providing an indication of the relative position of any two interferring aircraft, when such aircraft come within a predetermined range of one another, wherein each aircraft includes in combination:
a plurality of directional, transmit/receive antennae mounted on the aircraft, each antenna defining a separate zone about the aircraft;
transmitter means for transmitting through each of said antennae a coded signal which is unique to that antenna;
receiver means attached to each of said antennae for receiving through the antennae, transmitted coded signals from said other interferring aircraft; and
logic means for decoding said received signals for providing an indication of the zone on the other aircraft from which the received signal originated.

4,298,876
POLARIZER FOR MICROWAVE ANTENNA
Pierre Crochet, Paris, France, assignor to Thomson-CSF, Paris, France
Filed Feb. 25, 1980, Ser. No. 123,950
Claims priority, application France, Mar. 2, 1979, 79 05499
Int. Cl.³ H01Q ***19/195***
U.S. Cl. 343—756 **10 Claims**

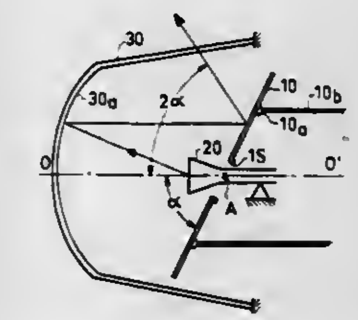

1. A polarizer for a microwave antenna operating at a wavelength λ, comprising:
a polarization filter;
a reflector; and
means for rigidly joining said polarization filter and said reflector so that they are spaced at a distance λ/4 from one another, the polarization filter including a conductive plate, and a periodic network of resonant slots at the operating frequency of the antenna provided in said conductive plate.

4,298,877
OFFSET-FED MULTI-BEAM TRACKING ANTENNA SYSTEM UTILIZING ESPECIALLY SHAPED REFLECTOR SURFACES
Carlyle J. Sletten, Acton, Mass., assignor to Solar Energy Technology, Inc., Bedford, Mass.
Filed Jan. 26, 1979, Ser. No. 7,155
Int. Cl.³ H01Q ***19/14***
U.S. Cl. 343—781 CA **21 Claims**

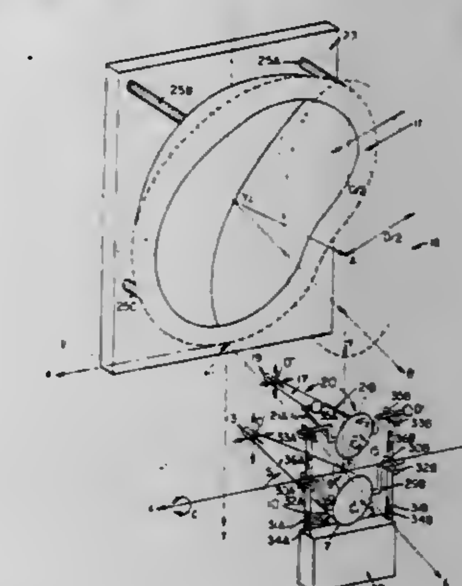

1. An antenna system for radiating and receiving electromagnetic energy at frequencies above 30 mHz comprising:
two shaped subreflectors being generally separated, non-conic section surfaces and each separately being illuminated and fed by one or more horn radiators and one of the said shaped subreflectors with its illuminating horn radiator or horn radiators being called herein the principal feed and other shaped subreflector with illuminating horn radiator or horn radiators being called herein the secondary feed; and
a shaped main reflector being also generally a non-conic section surface mounted in a position fixed with respect to a fixed frame of coordinates referred to the earth's surface and said shaped main reflector being illuminated independently by said principal feed and said secondary feed such that said antenna system produces one or more antenna radiation pattern or patterns each with a main antenna beam pointed in a direction corresponding to the locations and orientations of the main shaped reflector, one of the shaped subreflectors, and one of the horn radiators; and
the orientation of said shaped main reflectors with respect to that of the principal feed and the secondary feed being an offset position such that electromagnetic energy radiated to and from the said principal feed and said secondary feed to illuminate said shaped main reflector is largely unobstructed and the electromagnetic energy passing to and from the shaped main reflector surface from signal sources located in directions of said antenna main beams is also largely unobstructed, said orientation of the main shaped subreflector with respect to the principal feed and the secondary feed being referred to a plane of left-right symmetry which divides the shaped main reflector surface and the two shaped subreflector surfaces into nearly equal left-right symmetric portions and such that the center of the shaped subreflector surfaces, the directions of the axes of the several horn radiators and the direction of the antenna main beams all lie approximately in said plane of left-right symmetry, and the orientation of the two shaped subreflectors is such as to position one shaped subreflector above the other and such that the focal region of the main

reflector lies between the said two shaped subreflectors and the shaped main reflector; and

the shapes of said shaped subreflectors and said shaped main reflector being constructed to produce a prescribed electromagnetic power and phase distribution over the aperture of the shaped main reflector which distribution includes a nearly uniform power and phase aperture distribution when said shaped subreflectors and main reflector are illuminated by said horn radiators and antenna portions are oriented and positioned as specified above to produce said antenna patterns and antenna beams; and

said antenna beams being scanned in angular directions by changing the positions of said two subreflectors and their horn radiators with respect to the fixed shaped main reflector position by means of moveable supports and apparatus attached to said two shaped subreflectors and to said horn radiators such that the changed positions of the shaped subreflectors and the horn radiators enable the antenna beams to track angular changes in signal source directions.

4,298,878
RADIATING SOURCE FORMED BY A DIPOLE EXCITED BY A WAVEGUIDE AND AN ELECTRONICALLY SCANNING ANTENNA COMPRISING SUCH SOURCES
Albert Dupressoir, and Francois Salvat, both of Paris, France, assignors to Thomson-CSF, Paris, France
Filed Mar. 25, 1980, Ser. No. 133,883
Claims priority, application France, Mar. 28, 1979, 79 07801
Int. Cl.³ H01Q *1/38, 1/36*
U.S. Cl. 343—795 **17 Claims**

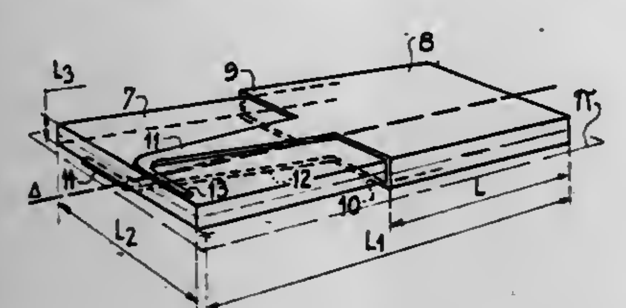

1. A radiating source formed by a dipole with two stems excited by a rectangular-section waveguide, comprising a dielectric sheet in the form of a rectangular prism of length L_1, width L_2 and height L_3 whose two opposite major faces parallel to a longitudinal midplane π and two opposite minor faces perpendicular to said midplane and parallel to the longitudinal centerline Δ of the sheet are each covered with a metal layer of length L less than L_1 for forming said waveguide, the metal layers covering said major opposite faces being each extended along said centerline Δ by a metal tongue of reduced width terminating in a respective stem of said dipole.

4,298,879
FIELD EFFECT TRANSISTOR
Yutaka Hirano, Atsugi, Japan, assignor to Fujitsu Limited, Kawasaki, Japan
Filed Feb. 4, 1980, Ser. No. 118,225
Claims priority, application Japan, Feb. 9, 1979, 54-14099
Int. Cl.³ H01L *29/80*
U.S. Cl. 357—22 **5 Claims**

1. A transistor device having interdigital electrodes on a surface of a semiconductor body, said device comprising

an insulating substrate,

a plurality of active semiconductor regions placed on said insulating substrate,

source and drain electrodes placed on said plurality of active semiconductor regions, said source and drain electrodes being interconnected at the opposite ends with contact pad areas, respectively, and

gate electrodes placed between said source and drain electrodes and connected together with a gate contact pad

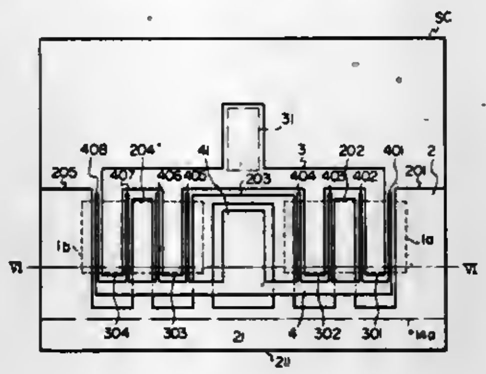

area, said gate contact pad area being placed between a pair of adjacent ones of said active semiconductor regions.

4,298,880
POWER THYRISTOR AND METHOD OF FABRICATION THEREFORE UTILIZING CONTROL, GENERATING, AND FIRING GATES
Roland Sittig, Umiken, Switzerland, assignor to BBC, Brown, Boveri & Co., Ltd., Baden, Switzerland
Filed Feb. 6, 1979, Ser. No. 9,913
Claims priority, application Switzerland, Jan. 15, 1978, 6523/78
Int. Cl.³ H01L *29/74*
U.S. Cl. 357—38 **3 Claims**

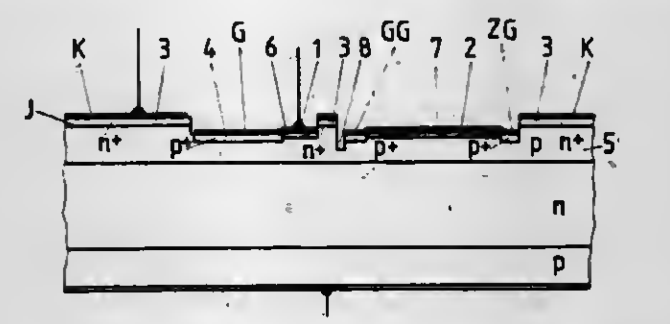

1. A power thyristor formed by four zones of alternating conductivity type with cathode and anode zones respectively adjacent opposed thyristor main cathode and anode surfaces, and a cathode-base zone and an anode-base zone respectively adjacent said cathode and anode zones, comprising:

said thyristor having portions of said cathode-base zone extended to said cathode main surface on which there is formed at least one control gate adapted to be coupled to an ignition circuit for the ignition of the thyristor, at least one generator gate separated from said control gate but adjacent thereto for furnishing a current to ignite parts of the thyristor remote from said control gate, and at least one firing gate being fed with said current from said generator gate and being arranged near said remote parts;

said generator gate electrically connected to said firing gate with no intervening cathode-base zone;

the ratio of the lateral resistance R'_{GK} between the generator gate and the nearest part of the cathode zone, and the lateral resistance R_{GK} between the firing gate ZG and the nearest part of the cathode zone, satisfying the relationship $R_{GK}/R'_{GK} < \frac{1}{3}$; and

the ratio between the edge—length of the generator gate and the edge—length of the firing gate satisfying the relationship $I'_G R_{GK} < 0.2$ V, where I'_G denotes the minimum gate current at which the thyristor still fires in the vicinity of the firing gate.

4,298,881
SEMICONDUCTOR DEVICE WITH DOUBLE MOAT AND DOUBLE CHANNEL STOPPERS
Shuroku Sakurada; Yoichi Nakashima; Isao Kojima; Hideyuki Yagi; Tadaaki Kariya, and Masayoshi Sugiyama, all of Hitachi, Japan, assignors to Hitachi, Ltd., Tokyo, Japan
Filed Apr. 7, 1980, Ser. No. 138,085
Claims priority, application Japan, Apr. 6, 1979, 54-40935
Int. Cl.³ H01L *29/47*
U.S. Cl. 357—38 **7 Claims**

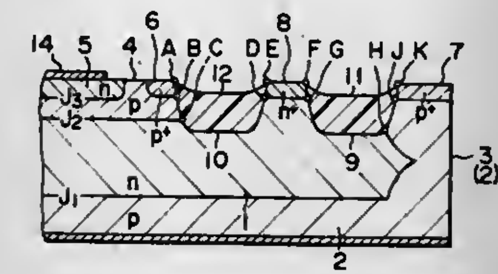

1. A semiconductor device comprising

(a) a semiconductor substrate having first and second main surfaces, at least three semiconductor layers whose conductivity types alternate between said main surfaces and a portion of each of which is exposed, respectively, in said first main surface, two moats provided concentrically in said first main surface in which moats the edges of the pn-junctions formed by said layers are exposed, and channel stopper semiconductor regions which are formed on the surfaces of said layers exposed in said first main surface, each region being highly-doped with respect to its respective underlying layer, and being contiguous to said moats and apart from said pn-junctions, each of said regions having the same conductivity type as the layer on which said region is formed;

(b) surface passivating material filling said moats; and

(c) a pair of main electrodes provided on said first and second main surfaces of said substrate.

4,298,882
MULTILAYER SEMICONDUCTOR ELEMENT
Jaroslav Homola, Kladno; Karel Remajzl, and Milan Prokes, both of Prague, all of Czechoslovakia, assignors to CKD Praha, obrovy podnik, Prague, Czechoslovakia
Continuation-in-part of Ser. No. 935,907, Aug. 23, 1978, abandoned. This application Oct. 15, 1980, Ser. No. 197,258
Claims priority, application Czechoslovakia, Aug. 23, 1977, 5529-77
Int. Cl.³ H01L *29/74*
U.S. Cl. 357—38 **2 Claims**

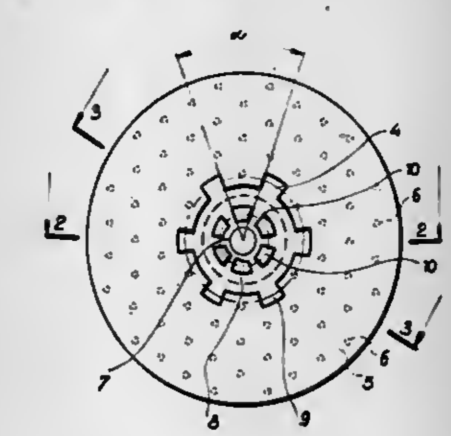

1. A multilayer semiconductor element comprising a layer of a fundamental semiconductor material, a first and a second external semiconductor layer with a type of electrical conductivity opposite from that of the layer of the fundamental semiconductor material, the layer of fundamental semiconductor material being situated between said two external semiconductor layers, an emitter layer and an auxiliary emitter layer of the same type of conductivity as the layer of the fundamental semiconductor material being provided on the second external semiconductor layer, a first main electrode on the first external semiconductor layer, a second main electrode disposed above and in contact with the emitter layer on the second external semiconductor layer and also in contact with the second external semiconductor layer in a number of places and forming so-called microleaks, an auxiliary contact in contact with a part of the auxiliary emitter layer on the second external semiconductor layer and also in contact with the second external semiconductor layer, a central control electrode on the second external semiconductor layer, said auxiliary contact being provided between the second main electrode and the control electrode, the auxiliary emitter layer being situated between the control electrode and the peripheral edge portion of the emitter layer, the emitter layer being in contact with the second main electrode with the exception of the peripheral edge portion of the second main electrode near the control electrode, whereby the auxiliary emitter layer is in contact with the auxiliary contact, the auxiliary emitter layer being divided into at least two parts mutually separated by zones of the second external semiconductor layer, the peripheral edge portion of the emitter layer in the direction toward the control electrode being equally separated by zones of the second external semiconductor layer, said zones reaching up to contact the second main electrode and being equal in number to the parts of the auxiliary emitter layer, the geometric arrangements between the second external semiconductor layer and the second main electrode being the same in all parts of the surface of the emitter layer, the microleaks lying on circles with centers at the center of each part of the thus divided border of the emitter layer, said circles, having a radius equal to at least 1.5 times the distance of the centers of each nearest two microleaks from each other.

4,298,883
PLASTIC MATERIAL PACKAGE SEMICONDUCTOR DEVICE HAVING A MECHANICALLY STABLE MOUNTING UNIT FOR A SEMICONDUCTOR PELLET
Shigeru Komatsu, Yokohama; Satoshi Takahashi, Tokyo, and Masao Wakatsuki, Yokohama, all of Japan, assignors to Tokyo Shibaura Electric Co., Ltd., Japan
Filed Apr. 25, 1978, Ser. No. 899,820
Claims priority, application Japan, Apr. 26, 1977, 52-47387
Int. Cl.³ H01L *23/28, 23/48, 29/44*
U.S. Cl. 357—72 **14 Claims**

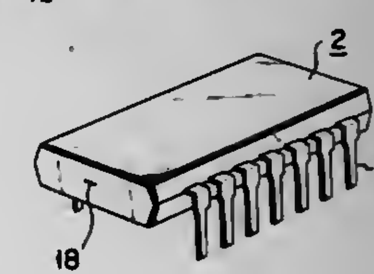

1. A packaged semiconductor device comprising:

a semiconductor pellet;

a mounting unit including:

(i) a planar mounting part having said semiconductor pellet adhesively mounted thereon;

(ii) a pair of supporting bars extending from said mounting part in opposite directions;

(iii) first side plate sections for reinforcing said planar mounting part, said first side plate sections formed by bending first edge portions of said mounting part at a first oblique angle with respect to the plane of said mounting part;

(iv) second side plate sections for reinforcing said planar mounting part, said second side plate sections formed by bending second edge portions of said mounting part

at a second oblique angle with respect to the plane of said mounting part;

a package member comprising an electrically insulative resin which contracts when cured to completely encapsulate said mounting unit and said semiconductor pellet in said resin substantially at the center of said package member, said resin being in direct contact with said pellet and said mounting unit, said side plate sections preventing stresses from damaging said pellet when said resin contracts; and

a plurality of individually separate lead members, each of said lead members being fixed to the package member and electrically connected at one end to said semiconductor pellet and extending at its other end outside of the package member.

4,298,884

CHROMA AMPLIFIER AND COLOR KILLER

Daniel L. Reneau, Elmhurst, Ill., assignor to Zenith Radio Corporation, Glenview, Ill.

Filed Mar. 31, 1980, Ser. No. 135,947

Int. Cl.[3] H04N *9/49*

U.S. Cl. 358—26 **10 Claims**

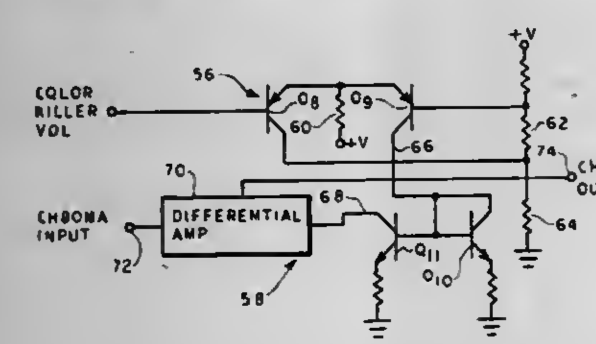

1. In a color television receiver, a chroma amplifier and color killer, comprising:

first and second emitter-coupled transistors receiving a current source having a D.C. operating component and an A.C. chroma signal component;

third and fourth emitter-coupled transistors receiving a current source having only a D.C. operating component substantially equal to the D.C. operating component received by the first and second transistors;

means for coupling a variable ACC voltage and a substantially fixed D.C. bias voltage to selected base terminals of said transistors such that said first transistor develops an A.C. chroma signal output at its collector whose amplitude is controlled by the ACC voltage, and said fourth transistor develops a D.C. output signal which includes substantially no A.C. component and whose amplitude varies with variations in the ACC voltage;

a D.C. actuated color killer; and

means for coupling said D.C. output voltage to said color killer.

4,298,885

LUMINANCE CONTROL CIRCUIT FOR A TELEVISION RECEIVER

Takashi Okada, Yokohama, Japan, assignor to Sony Corporation, Tokyo, Japan

Filed Oct. 15, 1979, Ser. No. 84,751

Claims priority, application Japan, Oct. 17, 1978, 53-127566

Int. Cl.[3] H04N *5/14*

U.S. Cl. 358—39 **29 Claims**

1. A luminance control circuit for a television receiver which is operative to reproduce a video signal applied to a cathode ray tube having a dynamic range between a cutoff level and a saturation level, comprising:

means for sensing a level of said video signal in respect to at least one of said cutoff level and said saturation level of the tube and for producing a control signal in response thereto; and

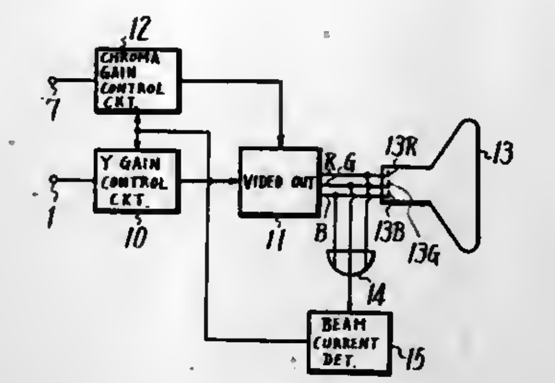

control means responsive to said control signal for varying said video signal applied to said cathode ray tube so as to maintain said video signal, as applied to said cathode ray tube, within said dynamic range.

4,298,886

AUTOMATIC PEAK BEAM CURRENT LEVELER SYSTEM

Geoffrey W. Perkins, Geneva, Switzerland, assignor to Motorola Inc., Schaumburg, Ill.

Filed Dec. 12, 1979, Ser. No. 102,685

Int. Cl.[3] H04N *5/68*

U.S. Cl. 358—74 **10 Claims**

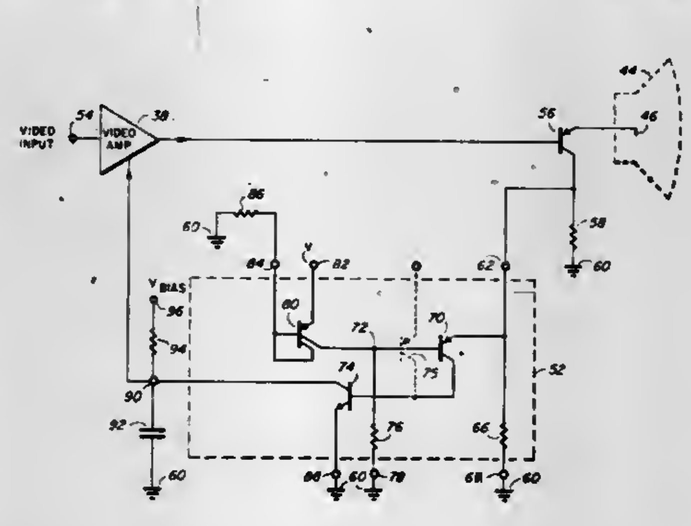

8. In a television including a cathode ray tube having at least one cathode and grid, video signal processing circuit for producing a video signal and a gain controlled amplifier responsive to the video signal for producing beam current between the cathode and grid of the cathode ray tube, a peak beam current leveler system, comprising:

a first transistor having first, second and control electrodes, said first electrode being coupled to the cathode of the cathode ray tube, said control electrode being coupled to an output of the gain controlled amplifier;

means coupled to said second electrode of said first transistor receiving therefrom the beam current for producing a voltage at an output thereof the level of which corresponds to the magnitude of the beam current; and

comparator means connected to said output of said voltage producing means for producing a gain control signal when said level of said voltage produced by said voltage producing means exceeds a predetermined threshold level, said gain control signal being applied to the gain controlled amplifier such that the peak beam current is automatically adjusted.

4,298,887

NON-UNIFORMITY CORRECTION IN A MULTIELEMENT DETECTOR ARRAY

Jonathan P. Rode, Thousand Oaks, Calif., assignor to Rockwell International Corporation, El Segundo, Calif.

Filed Jun. 9, 1980, Ser. No. 157,588

Int. Cl.[3] H04N *7/18*

U.S. Cl. 358—113 **11 Claims**

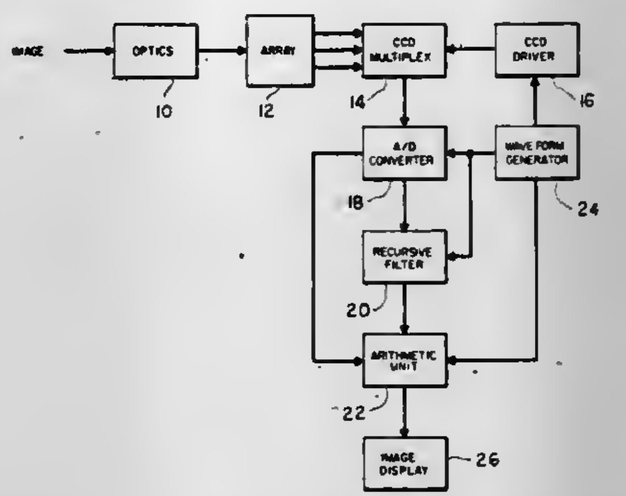

1. A method of correcting for non-uniformities in an element of a detector array, comprising the steps of:

(a) recording the output from the detector element at a plurality of times;

(b) weighting the recorded outputs;

(c) summing the weighted outputs for the detector element; and

(d) subtracting the summed output for the element from the present output of that element to provide a corrected output.

4,298,888

NON-INTERLACED TO INTERLACED FORMAT VIDEO CONVERTER

Joseph H. Colles, Oceanside, and James E. Cooper, Jr., Solona Beach, both of Calif., assignors to Hughes Aircraft Company, Culver City, Calif.

Filed Jun. 8, 1979, Ser. No. 46,745

Int. Cl.[3] H04N *5/02*

U.S. Cl. 358—140 **11 Claims**

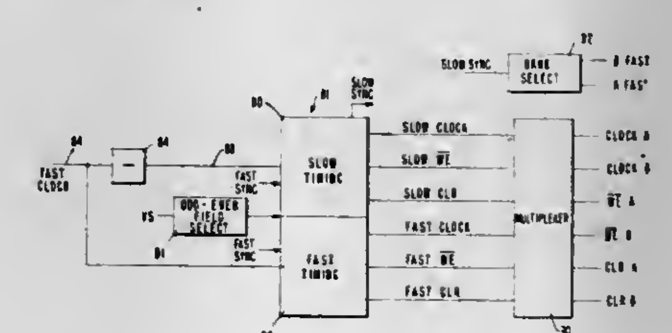

1. A video converter responsive to first and second frames of non-interlaced odd and even lines of input data received during first and second non-interlaced frame periods comprising:

first and second memory means each storing a line of input data,

a source of fast clock signals and slow clock signals coupled to said first and second memory means for being alternately applied to respective first and second memory means and to respective second and first memory means, alternating after each sequential pair of line periods of said input data, and

control means coupled to said first and second memory means for controlling said memory means to alternately write one line of input data in one memory means at the rate of said fast clock signals while reading one line of input data from the other memory means at the rate of said slow clock signals during first and second interlaced output field periods respectively occurring during said first and second non-interlaced frame periods, said control means including means to control said first and second memory means to write and read said odd lines of said input data during said first non-interlaced frame periods and to write and read said even lines of input data during said second non-interlaced frame periods.

4,298,889

SYNCHRONIZATION CIRCUIT FOR VIDEO CLOCK OSCILLATORS

Rudolf Burianek, and Gottfried Tschannen, both of Zürich, Switzerland, assignors to Siemenas-Albis AG, Zürich, Switzerland

Filed Mar. 5, 1980, Ser. No. 127,454

Claims priority, application Switzerland, Mar. 16, 1979, 2498/79

Int. Cl.[3] H04N *5/04*

U.S. Cl. 358—148 **10 Claims**

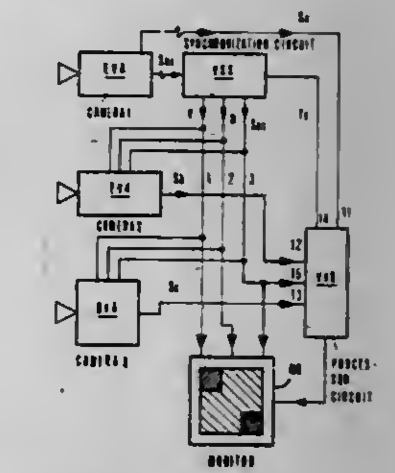

1. A synchronization circuit for video clock generators, in order to obtain a line synchronization simultaneous with a complete image synchronization, comprising:

a follow-up control having an output and delivering a clock frequency signal;

said follow-up control having a reference input and a comparison input;

a line pulse separation circuit having an output delivering an external horizontal pulse signal;

said follow-up control having said reference input connected with said output of the line pulse-separation circuit which delivers said external horizontal pulse signal;

an external complete image-characteristic pulse-separation circuit having an input and an output;

the reference input of the follow-up control being connected with the input of the external complete image-characteristic pulse-separation circuit;

both of the separation circuits being impinged at their input sides with a mixed pulse signal;

a comparator having a first input and a second input and delivering an output signal;

the external complete image-characteristic pulse-separation circuit being connected at its output with the first input of the comparator;

an internal complete image-characteristic pulse-separation circuit having a first input and a second input and delivering an output signal;

the second input of the comparator receiving the output signal of the internal complete image-characteristic pulse-separation circuit;

a regulation pulse-switch means having a first input and a second input;

the output signal of the comparator being infed to the first input of the regulation pulse-switch means;

said regulation pulse-switch means having an output;

a video clock generator having a clock input;
the output of the regulation pulse-switch means being connected with the clock input of said video clock generator;
said video clock generator having respective outputs delivering respectively an internal mixed pulse signal and an internal horizontal pulse signal;
said internal horizontal pulse signal being infed to the comparison input of the follow-up control and the first input of the internal complete image-characteristic pulse-separation circuit;
said internal complete image-characteristic pulse-separation circuit receiving at its second input the internal mixed pulse signal; and
said follow-up control having its output connected with the second input of the regulation pulse-switch means.

4,298,890
DIGITAL VERTICAL SYNCHRONIZATION SYSTEM FOR A TELEVISION RECEIVER
Stephen Lai, Mt. Prospect, and Gopal K. Srivastava, Buffalo Grove, both of Ill., assignors to Zenith Radio Corporation, Glenview, Ill.
Filed Apr. 21, 1980, Ser. No. 142,291
Int. Cl.³ H04N *5/04*
U.S. Cl. 358—158 18 Claims

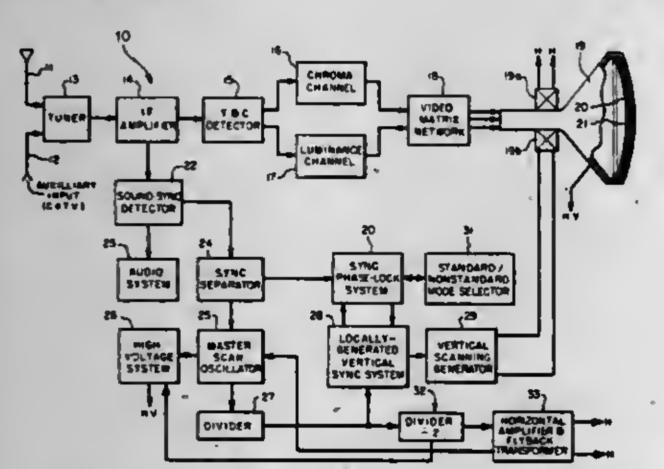

1. In a digital vertical synchronization system having a source of locally generated vertical sync pulses coupled to a vertical sweep system, a source of derived vertical sync pulses developed from and in a time relationship with received television signals, a phasing circuit for testing the time relationship between the derived vertical sync pulses and the locally generated vertical sync pulses, said phasing circuit outputting a signal indicative of the test, means responsive to the phasing circuit for adjusting the phase of the locally generated vertical sync pulses, and a mode recognition circuit for determining whether the received television signal includes equalizing pulses in a vertical interval, said mode recognition circuit having an output for indicating whether the digital synchronization system should operate in a standard mode wherein the phase of the locally generated vertical sync pulses is adjusted at a first rate or in a nonstandard mode wherein the phase of the locally generated vertical sync pulses is adjusted at a second rate lower than the first rate, the improvement comprising:
forced mode means, associated with said mode recognition circuit and responsive to the phasing circuit output signal, for automatically forcing said mode recognition circuit output to indicate nonstandard mode.

4,298,891
TELEVISION RECEIVER
Takaaki Baba, Nishinomiya; Takayuki Sagishima, Suita; Teruo Kitani, Takatsuki, and Reiichi Sasaki, Yawata, all of Japan, assignors to Matsushita Electric Industrial Co., Ltd., Osaka, Japan
Filed Jun. 18, 1979, Ser. No. 49,637
Claims priority, application Japan, Jun. 19, 1978, 53-74462
Int. Cl.³ H04N *5/22*
U.S. Cl. 358—183 3 Claims

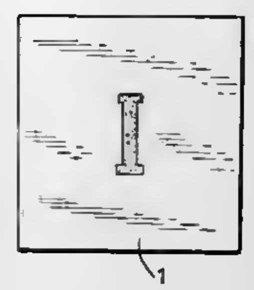

1. A television receiver comprising: television signal receiving means for simultaneously receiving two television signals to produce a first image signal and a second image signal corresponding to said television signals, respectively, each of which contains vertical synchronous signals and horizontal synchronous signals; synchronous signal producing means operatively coupled to said television signal receiving means for producing the vertical synchronous signals and the horizontal synchronous signals from said first and second image signals; memory means operatively coupled to said television signal receiving means for sampling and storing said second image signal; driving pulse producing means operatively coupled to said synchronous signal producing means and to said memory means for producing driving pulses to drive said memory means in accordance with said vertical synchronous signals and said horizontal synchronous signals applied thereto; mixing means operatively coupled to said television signal producing means and to said memory means for producing a mixed image signal composed of said first image signal having a portion of which replaced, under the control of said driving pulses, by said second signal read out from said memory means by said driving pulses; and display means operatively coupled to said mixing means for displaying said mixed image signal on a television screen, wherein: each horizontal synchronous period of said second image signal is sampled by said memory means into N_H sampled signals, N_H geing an integer; M horizontal synchronous periods of said second image signal are sequentially grouped into M/n sequential groups, each group consisting of n horizontal synchronous periods, M and n being integers, and M>n; and n sampled signals which are sampled by said memory means from each of said group of n adjacent horizontal synchronous periods of said second image signal, respectively, and which correspond to each other in the vertical direction on the television screen are summed and integrated into one sampled image signal element, whereby N_H such sampled image signal elements for each horizontal synchronous period of the second image signal in said mixed image signal are formed from $n \times N_H$ sampled signals of each of said group of n adjacent horizontal synchronous periods of said second image signal and stored by said memory means.

4,298,892
SWITCHING REGULATOR WITH INDEPENDENT FEEDBACK PATH FILTER
Howard M. Scott, Moorestown, N.J., assignor to RCA Corporation, New York, N.Y.
Continuation of Ser. No. 969,156, Dec. 13, 1978. This application May 27, 1980, Ser. No. 153,398
Int. Cl.³ H04N *3/18*
U.S. Cl. 358—190 9 Claims

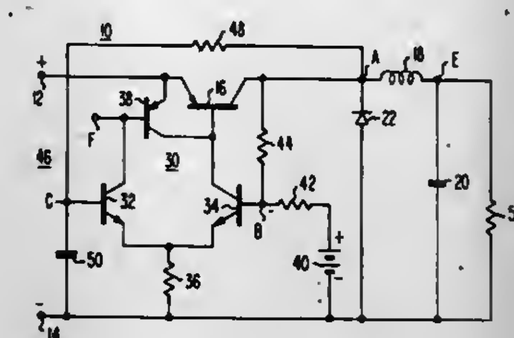

1. A switching regulator adapted for synchronized operation with a television display load apparatus and adapted to be energized from a source of unregulated direct voltage, comprising:
controllable switch means including a control electrode and a main current conducting path defining first and second terminals, said first terminal being coupled to a terminal of the source, said controllable switch means being subject to switching between on and off states to develop at said second terminal an alternating voltage having an average voltage component;
a filter including a choke coupled to said second terminal of said switch means and a capacitor coupled to the load apparatus for energizing said load apparatus with a substantially direct current voltage having a magnitude substantially that of said average voltage component;
a source of a television display horizontal deflection rate sync signal;
means for applying said television display sync signal to said controllable switch means to switch the state of said controllable switch means from a selected one of said on and off states to the other of said on and off states in coincidence with the arrival of said sync signal;
a comparator with a plurality of input terminals and a first output terminal coupled to said control electrode for switching states of said controllable switch means;
a reference voltage source coupled to one of said plurality of comparator input terminals; and
an integrator having an input terminal coupled to said second terminal and an output terminal coupled to one of said plurality of comparator input terminals for averaging said alternating voltage to vary the switching instant of said controllable switch means to the other one of said on and off states so as to maintain said average voltage component substantially unchanged with changes in said unregulated direct voltage.

4,298,893
T.V. ENERGIZED BY EXERCISE CYCLE
James H. Holmes, 31 Willis Rd. (P.O. Box 66657), Scotts Valley, Calif. 90566
Filed Aug. 29, 1980, Ser. No. 182,436
Int. Cl.³ H04N *3/18*
U.S. Cl. 358—190 6 Claims

1. A stationary pedal operated T.V. set including in combination:
a. a television set,
b. a pedal operated electric generator and,

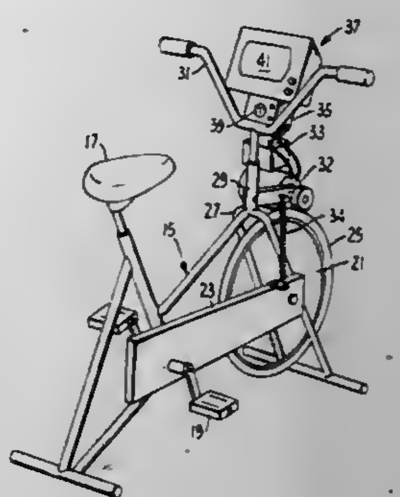

c. means connecting said generator to said television set whereby operating said pedals causes said television set to operate.

4,298,894
IMAGE PICK-UP TUBE
Yoshio Takamura; Soichiro Abe; Noboru Nakamura, and Hiroyuki Suzuki, all of Yokohama, Japan, assignors to Tokyo Shibaura Denki Kabushiki Kaisha, Kawasaki, Japan
Filed Feb. 8, 1980, Ser. No. 119,847
Claims priority, application Japan, Feb. 14, 1979, 54-15672
Int. Cl.³ H04N *5/30*
U.S. Cl. 358—229 8 Claims

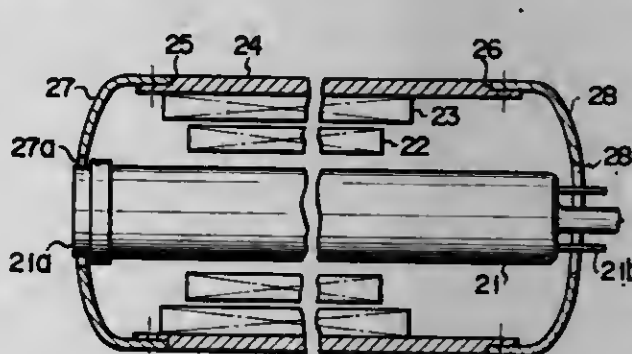

1. An image pick-up tube assembly suitable for use in a color television camera, comprising:
an image pick-up tube having a target provided in the front portion thereof;
a coil assembly surrounding said image pick-up tube;
a cylindrical shield case having front and rear openings therein housing said image pick-up tube and said coil assembly; and
front and rear shielding means for covering the front and rear openings of said shield case, said front shielding means including means for defining an aperture corresponding in location to said target, said front shielding means and said shield case including coupling means formed by a step portion of said cylindrical shield case adapted to interlock with said front shielding means forming a contact therebetween in both horizontal and vertical contact planes.

4,298,895

VISUAL IMAGE NOISE ELIMINATING SYSTEM

Yoshio Arai; Hiroyuki Kataoka; Isao Suzuki, and Shozo Yokota, all of Ebina, Japan, assignors to Fuji Xerox Co., Ltd., Tokyo, Japan

Filed Aug. 30, 1979, Ser. No. 71,417
Claims priority, application Japan, Aug. 31, 1978, 53-105621
Int. Cl.[3] H04N *1/40, 5/31*
U.S. Cl. 358—284 **7 Claims**

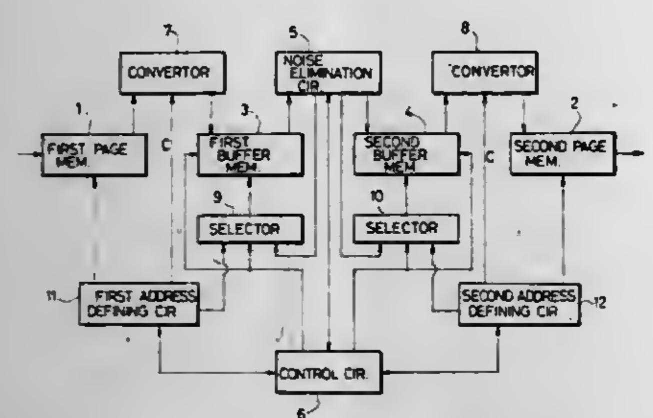

1. A method for eliminating noise in a system for recording a visible image on a recording medium in accordance with binary electric image signals produced for each of a plurality of scanning line, comprising the steps of counting one level of two levels of the binary electric image signals corresponding to picture elements in a surrounding area surrounding at least a part of an objective area including at least one picture element and producing an image signal representing the at least one picture element in the objective area as the one level when the percentage of the counted value is more than a predetermined level and as the other level when the percentage of the counted value is less than the predetermined level.

4,298,896

FLICKER-FREE REPRODUCTION OF TELEVISION PICTURES FROM RECORDINGS OF ONLY ALTERNATE PICTURE LINES

Jürgen Heitmann, Fliederweg, Fed. Rep. of Germany, assignor to Robert Bosch GmbH, Stuttgart, Fed. Rep. of Germany

Continuation of Ser. No. 828,900, Aug. 29, 1977, abandoned. This application Feb. 2, 1979, Ser. No. 8,973
Int. Cl.[3] H04N *5/76*
U.S. Cl. 360—11 **7 Claims**

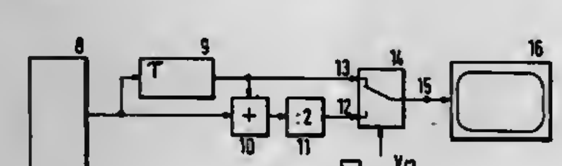

1. A method of reproducing television signals from a record on which are stored television field signals constituting corresponding halves of two-field interlaced television pictures by reproducing said field signals repeatedly, comprising the steps of:

providing the played back signals to a delay circuit having a delay period of one line scan period;

providing to the inputs of an adding circuit, respectively, the delayed output signal of said delay circuit and the currently reproduced played back signal and thereby forming a signal which is an average of the two, thus representing the average value of the two consecutive lines of the same picture field; and

supplying to television picture reproducing circuits in alternate field scan periods, respectively, one of the signals provided to an input of said adding circuit and the average signal formed in the step just previously described.

4,298,897

BUFFERED RECORDING

Nelson K. Arter, Longmont; Ernest W. Devore; Arthur B. Wills, both of Boulder, all of Colo.; and Leslie R. Zelenka, Tucson, Ariz., assignors to International Business Machines Corporation, Armonk, N.Y.

Filed Sep. 20, 1979, Ser. No. 77,505
Int. Cl.[3] G11B *5/09, 5/12, 21/08, 21/10*
U.S. Cl. 360—39 **44 Claims**

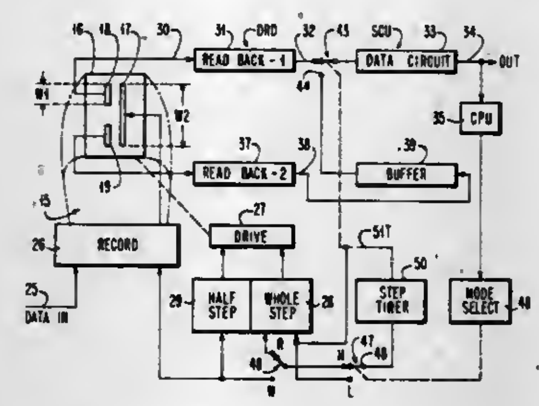

1. A signal recorder adapted to exchange signals with a record member in any of a first plurality of track widths, the improvements including in combination:

a transducer adapted to scan tracks on a record medium and having a write gap with a first track width for scanning one track of said first width equal to a total width of a first plurality of a second and narrower track width and further having a plurality of read gaps aligned with said write gap along a length of said first width track, and each of said read gaps having a width corresponding to said second track width and being said first track width divided by said first plurality and said gaps being in a side-by-side arrangement for simultaneously scanning a said first plurality of said second width tracks;

track switching means operative during recording signals for switching between predetermined juxtaposed ones of said tracks having said second track widths and operative during reproducing signals to simultaneously switch between juxtaposed groups of said first plurality of tracks equalling said second track width;

means for simultaneously receiving signals from said read gaps which simultaneously scan said first plurality of said tracks having said second track width; and

means for serializing all signals produced from said simultaneous sensing.

4,298,898

METHOD OF AND APPARATUS FOR READING DATA FROM REFERENCE ZONES OF A MEMORY

Claude R. Cardot, Lexington, Mass., assignor to Compagnie Internationale Pour l'Informatique CII Honeywell Bull, Paris, France

Filed Apr. 19, 1979, Ser. No. 31,458
Int. Cl.[3] G11B *5/02, 5/09*
U.S. Cl. 360—67 **47 Claims**

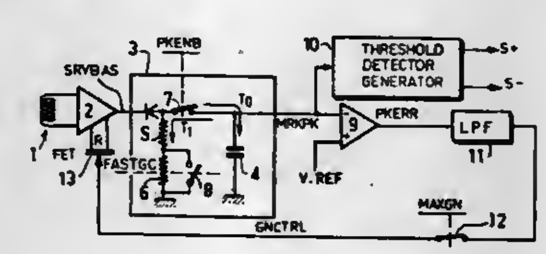

1. An apparatus for reading data with a magnetic head from reference zones on tracks at differing radii of a magnetic memory disc rotating at constant angular velocity, each track including at least one reference zone, each reference zone including a plurality of initial cells each having magnetic flux variations which when read by the head result in a first waveform that includes undulations enabling the head to be properly servo controlled to a position over the center of the track and a further undulation that is distinguishable from the head positioning undulations, the initial cells being followed by plural binary bit representing data cells each having magnetic flux variations which when read by the head result in a second waveform including a data representing undulation that is approximately the same amplitude as the further undulations, the undulations susceptible of having varying amplitudes as the head is positioned at different positions on the disc, comprising a variable gain means responsive to the head, means responsive to the peak amplitudes of the further undulations of a reference zone for setting the gain of the variable gain means while the second waveforms of the reference zone are being applied to the variable gain means, the peak amplitudes of the initial and data cells as derived from the variable gain means for differing reference zones being variable and dependent upon the amplitude of the peak amplitude of the further undulations for a reference zone, means responsive to the variable peak amplitude of the further undulations for a reference zone for setting an amplitude threshold for the peak values of the second waveforms of that zone, and means responsive to the set amplitude threshold and an output of the variable gain means while the second waveforms are being applied to the variable gain means for determining the values of the data cells.

4,298,899

MAGNETIC HEAD ASSEMBLY WITH FERRITE CORE

Armando J. Argumedo, Tucson, Ariz.; George W. Brock, Los Altos Hills, Calif., and Paul D. Losee, Tucson, Ariz., assignors to International Business Machines Corporation, Armonk, N.Y.

Filed Dec. 17, 1979, Ser. No. 103,968
Int. Cl.[3] G11B *5/22, 5/42*
U.S. Cl. 360—122 **6 Claims**

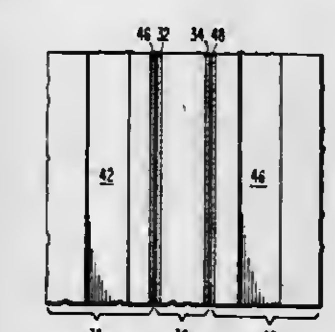

1. A magnetic head assembly including a ferrite core having two sides and a transducing gap between said sides, wherein the improvement comprises:

first and second ceramic structures disposed respectively on each side of said core;

first and second alumina films disposed on each side of and in contact with said core;

third and fourth alumina films deposited respectively on one side of and in contact respectively with said ceramic structures; and

means for bonding said first and third alumina films and said second and fourth alumina films to form a sandwich structure around said ferrite core.

4,298,900

OVERVOLTAGE PROTECTIVE DEVICE

Boris K. Avdeenko, prospekt Lunacharskogo, 70, korpus 1, kv. 55; Aron I. Bronfman, ulitsa Burenina, 3, kv. 108; Alexandr L. Vitkin, ulitsa Krasnoi Konnitsky, 18, kv. 1; Boris N. Zelentsov, Liteiny prospekt, 24, kv. 31, all of Leningrad; Valery N. Kinevsky, ulitsa Chernyshevskogo, 96, kv. 71, Kharkov, and Vladimir E. Rozet, Kljuchevaya ulitsa, 21, kv. 20, Leningrad, all of U.S.S.R.

Filed Jan. 2, 1980, Ser. No. 109,112
Int. Cl.[3] H02H *3/22*
U.S. Cl. 361—127 **5 Claims**

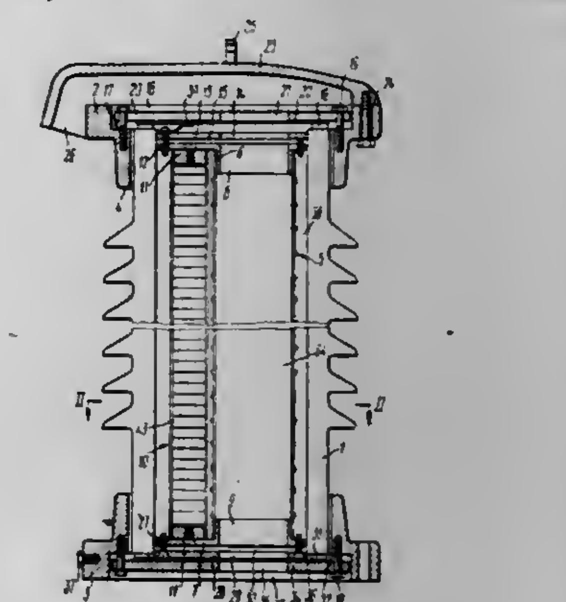

1. An overvoltage protective device comprising:

an insulating housing;

at least one column of non-linear resistors arranged inside said insulating housing;

a dielectric bush having a housing and arranged inside said insulating housing;

thermally conductive dielectric bulk material closely enveloping said column of non-linear resistors and said dielectric bush, said thermally conductive dielectric bulk material also being in contact with the inner surface of said insulating housing;

a gas vent channel defined by the inner surface of said dielectric bush and arranged lengthwise in relation to said column of non-linear resistors;

openings made in the wall of said housing of said dielectric bush;

a layer of dielectric material closing said openings.

4,298,901

RESISTIVE CONTROLLER

Marvin H. Weintraub, 5743 Kingsfield Dr., West Bloomfield, Mich. 48033, and Fred Oblinger, 31610 Delaware, Livonia, Mich. 48150

Filed Apr. 30, 1979, Ser. No. 34,609
Int. Cl.[3] H01H *47/32*
U.S. Cl. 361—178 **14 Claims**

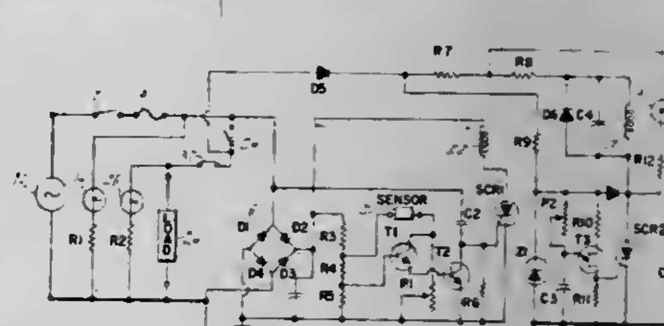

1. A resistive controller adapted to be connected to a source of electrical power for sensing a variable electrical resistance

indicative of a selected characteristic of a first substance, said resistive controller comprising:
sensor means, adapted to be disposed in said substance to be monitored, for sensing a variable electrical resistance indicative of said selected characteristic of said substance;
first electrical switch means;
means, operable in conjunction with said sensor means, for actuating said first electrical switch means when the resistance sensed by said sensor means reaches a predetermined level, said predetermined level of resistance being set by said actuating means;
means, responsive to the actuation of said first electrical switch means, for connection an external load to said source of electrical power, said external load being operative to control the addition of a second substance to said first substance;
timer means, responsive to said connecting means, for providing an adjustable time period after said external load is connected to said source of electrical power; and
means, responsive to said timer means and said sensor means, for permanently disconnecting said external load from said source of electrical power after the expiration of said time period if said variable electrical resistance measured by said sensor means has not returned to a predetermined range of values within said time period.

4,298,902
CAPACITOR CASCADE
Helmut Weigel, Selb, and Werner Wollenschläger, Wunsiedel, both of Fed. Rep. of Germany, assignors to Draloric Electronic GmbH, Fed. Rep. of Germany
Filed Jun. 18, 1979, Ser. No. 49,108
Claims priority, application Fed. Rep. of Germany, Dec. 7, 1978, 2853503
Int. Cl.³ H01G *4/38*
U.S. Cl. 361—328 **17 Claims**

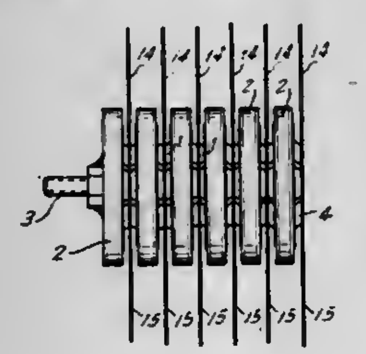

1. A capacitor cascade comprising:
a columnar array of ceramic disk capacitors, each said capacitor comprising a ceramic disk with opposite surfaces and a respective metal electrode on each said opposite surface, a said electrode of each said capacitor in said array being opposed to a said electrode of an adjacent said capacitor in said array;
a respective metallic connecting part being interposed between each pair of adjacent said disk capacitors for connecting said capacitors in series and each said connecting part being in mechanical and electrical contact with the opposed electrodes of the respective said pair of adjacent capacitors, each said connecting part comprising a metal sheet including a flat base part, a series of feet developed around said base part and projecting in opposite directions away from said base part towards the adjacent said capacitor electrodes, said feet terminating in respective contact portions deformed so as to be in surface contact with the said electrodes which they engage, said connecting parts being resilient, and therefore being resiliently deformable under pressure applied to said columnar array; and
means for fastening said columnar array of said capacitors together with said connecting parts between adjacent said capacitors, said fastening means applying axial force for holding said columnar array together.

4,298,903
ELECTRONIC COMPONENT COOLING ARRANGEMENTS
Stafford M. Ellis, East Preston, England, assignor to The General Electric Company Limited, London, England
Filed Jun. 22, 1979, Ser. No. 50,972
Claims priority, application United Kingdom, Jun. 29, 1978, 28252/78
Int. Cl.³ H05K *7/20*
U.S. Cl. 361—386 **9 Claims**

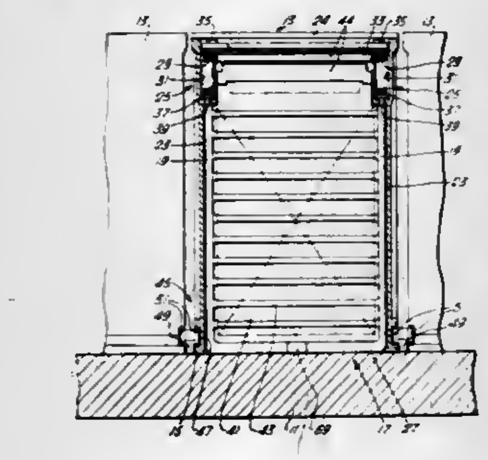

1. An electronic component cooling arrangement comprising:
(a) a cold wall;
(b) a wall structure in the form of a box open at one end in releasable contact at its open end with the cold wall to form a housing;
(c) a card within the housing;
(d) a plurality of electronic components mounted on the card;
(e) a heat conductive support frame within said housing having transverse side and end members and which supports said card with the components mounted on the card in good thermal contact with the frame;
(f) a guide arrangement within the housing receiving said side members of the frame; and
(g) preloaded spring bias means which is mounted on the wall structure and urges the support frame along said guide arrangement so that a said end member of the frame is in good thermal contact with the cold wall.

4,298,904
ELECTRONIC CONDUCTION COOLING CLAMP
Philip C. Koenig, Bainbridge Island, Wash., assignor to The Boeing Company, Seattle, Wash.
Filed Dec. 17, 1979, Ser. No. 104,643
Int. Cl.³ H05K *7/20*
U.S. Cl. 361—386 **3 Claims**

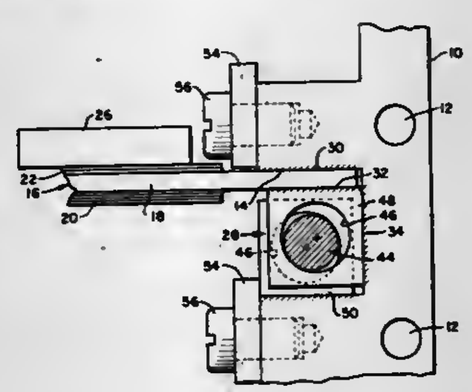

1. A device comprising a clamp mounting an edge portion of a printed circuit board into a channel guide having interior

opposing wall surfaces and an interconnecting wall surface, said device comprising: an elongated bar assembly of rectangular cross-section and having lengthwise a series of end-to-end bar segments with a hole extending longitudinally therethrough; a bolt having a head, a shank threaded at its end portion and being inserted through said hole in the elongated bar assembly; said elongated bar assembly having end bar segments at each end thereof wherein said hole is parallel offset from the longitudinal centerline of each of said end bar segments; one of said end bar segments being located at the head end of said bolt and having a hole diameter approximately equal to that of the bolt shank diameter for a close sliding fit; the other of said end bar segments being located at the shank end of said bolt and having a threaded hole for screwing onto the threaded shank end portion of said bolt; intermediate bar segments, between said head end bar segment and said shank end bar segment, wherein said hole is coaxial with the longitudinal centerline of said intermediate bar segments and of a substantially larger diameter than the shank diameter of said bolt extending therethrough; said intermediate bar segments, comprising in alternate series, a first set and a second set of intermediate bar segments having end facing surfaces abutting along an inclined plane such that said first and second set of intermediate bar segments spread divergently apart with their longitudinal centerlines remaining parallel to the bolt axis upon screwing the bolt into said threaded shank end bar segment and drawing the end bar segments tightly together; said first set of intermediate bar segments applying a force against said printed circuit board edge portion pressing it firmly against a first interior opposing wall surface of said channel guide and simultaneously bearing against the interconnecting wall surface of said channel guide; said second set of intermediate bar segments bearing against a second interior opposing wall surface of said channel guide; whereby said first set and said second set of intermediate bar segments provide a contact area with each of the interior wall surfaces of said channel guide thereby producing three thermal conductive paths between said printed circuit board edge portion and said channel guide.

4,298,905
COOLING APPARATUS FOR ELECTRONIC MODULES
Alan J. Bosler, Bedford, and Larry E. Nash, Washington, both of Ind., assignors to The United States of America as represented by the Secretary of the Navy, Washington, D.C.
Filed Feb. 19, 1980, Ser. No. 122,388
Int. Cl.³ H05K *7/20*
U.S. Cl. 361—386 **8 Claims**

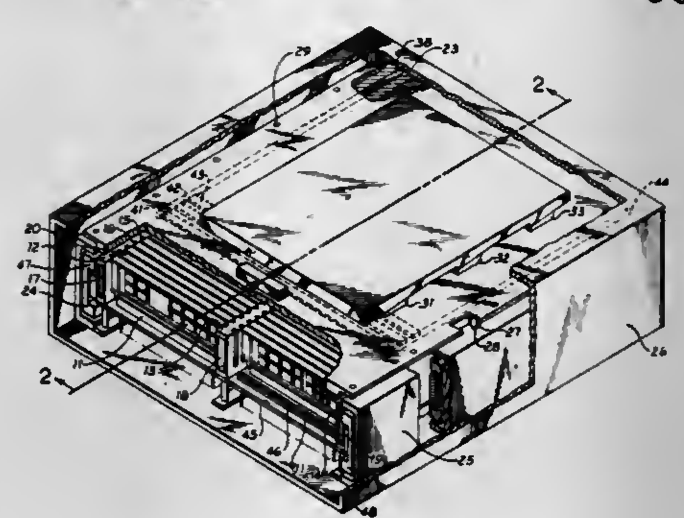

1. A modular electronic system comprising,
a case having a top, bottom and a plurality of sides,
a support assembly slidably mounted in said case and having at least two side plates, each having a plurality of spaced grooves therein,
spring means in each said groove,
a plurality of electronic modules each having a metallic frame with the ends of each said metallic frame being slidably mounted in opposed grooves in said side plates and supported by said spring means,
a metallic top plate positioned between said top of said case and said metallic frames of said electronic module,
means for moving said top plate into engagement with each frame of each electronic module whereby said spring means are depressed and provide a biasing force to engage said frames with said metallic top plate, and
means for cooling said side plates and said metallic top plate.

4,298,906
CAPACITOR AND ELEMENT THEREFOR
William H. Elias, Six Mile, S.C., assignor to Sangamo Weston, Inc., Norcross, Ga.
Filed Sep. 10, 1979, Ser. No. 74,177
Int. Cl.³ H01G *9/00*
U.S. Cl. 361—433 **3 Claims**

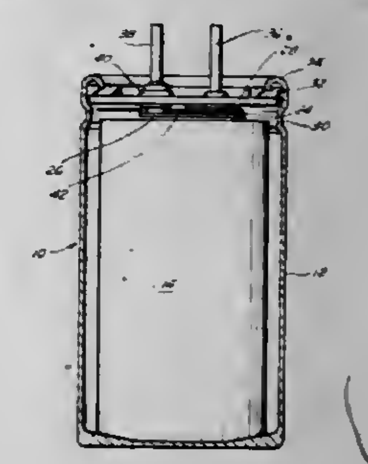

1. A capacitor comprising: a cylindrical case open at one end and closed at the other; a cylindrical header for closing said open end of said cylindrical case and including first and second leads spaced apart across a diameter of said cylindrical header; a first cylindrically rolled spacer film disposed in said cylindrical case; a cylindrically rolled cathode film abutting and encircled by said first cylindrically rolled spacer film; a second cylindrically rolled spacer film abutting and encircled by said cylindrically rolled cathode film; a cylindrically rolled anode film abutting and encircled by said second cylindrically rolled spacer film; a first tab conductively connected to and extending from said cylindrically rolled cathode film at a predetermined circumferential position and bendable across a diameter of said cylindrically rolled cathode film parallel to said diameter of said cylindrical header, said first tab operatively and conductively connected to said first lead and parallel to said diameter of said cylindrical header; a second tab conductively connected to and extendeing from said cylindrically rolled anode film proximate said predetermined circumferential position of said first tab at said cylindrically rolled cathode film and bendable across said diameter of said cylindrically rolled cathode film, said second tab overlapped by and longer than said first tab, said second tab extending beyond said first lead and conductively connected to second lead; and insulator spacer means disposed around said second lead and interposed between said first and second tabs to prevent contact therebetween.

4,298,907
FLASH ATTACHMENT WITH EXTENDABLE HEAD
Raymond B. Holt, Jr., 3341 Gulfstream La., Marietta, Ga. 30062
Filed Sep. 10, 1979, Ser. No. 73,848
Int. Cl.³ G03B *15/02*
U.S. Cl. 362—4 **8 Claims**

1. In a flash attachment comprising a body, mounting means connected to said body for fixedly securing said flash attachment to a camera, said body containing a discharge circuit and power supply means for providing electric charge to said

discharge circuit, a flash head including a light-emitting discharge element; the improvement of

an extendable member connecting said flash head and said body, said extendable member defining a longitudinal axis running between a first point at which said extendable member connects to said body and a second point at

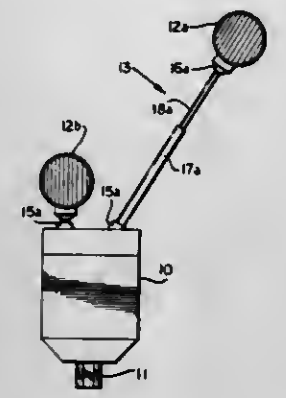

which said extendable member connects to said flash head, said extendable member being selectively extendable along said longitudinal axis, and

conducting means electrically connecting said body and said flash head for supplying electric charge to said light-emitting discharge element.

4,298,908

FLASHLAMP DISK CONTAINING INTERNAL REFLECTORS

George J. English, Reading; Robert E. Levin, South Hamilton, and Timothy Fohl, Carlisle, all of Mass., assignors to GTE Products Corporation, Stamford, Conn.

Filed Jun. 8, 1979, Ser. No. 46,874

Int. Cl.³ G03B *15/02*

U.S. Cl. 362—14 **12 Claims**

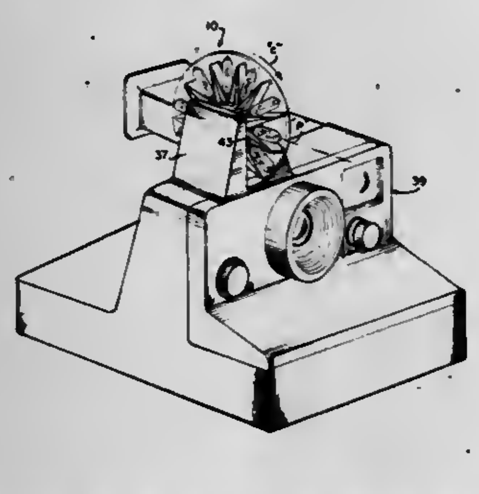

1. In a flashlamp unit including a disk-shaped, light-transmitting housing having a central axis, and a plurality of flashlamps each having a longitudinal axis and arranged within said housing in a radial pattern about said central axis such that said longitudinal axes of said flashlamps pass through said central axis, wherein said flashlamp unit is adapted for cooperating with an indexing means for rotating said housing about said central axis to selectively position each of said flashlamps at a first, stationary location with respect to said indexing means, the improvement comprising:

a plurality of reflectors, each of said reflectors including first and second substantially planar reflective members positioned within said disk-shaped housing adjacent a respective one of said flashlamps and on opposing sides thereof for reflecting a portion of the light emitted from said flashlamp upon ignition thereof through the peripheral region of said light-transmitting housing and for preventing sympathetic ignition between said flashlamp and flashlamps adjacent thereto.

4,298,909

PHOTOFLASH REFLECTOR CONFIGURATION

Rudolf Krieg, Munich, Fed. Rep. of Germany, assignor to Patent-Treuhand-Gesellschaft fur elektrische Gluhlampen mbH, Munich, Fed. Rep. of Germany

Filed Jan. 13, 1979, Ser. No. 48,039

Claims priority, application Fed. Rep. of Germany, Jul. 10, 1978, 2830321

Int. Cl.³ G03B *15/02*

U.S. Cl. 362—18 **10 Claims**

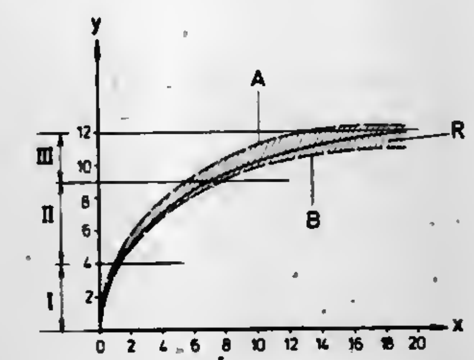

1. Selectively adjustable multi-beam electronic photographic flash having

a single elongated flashtube (2);

and a reflector assembly (4, 5, 6) partially surrounding the flashtube and including a plurality of reflector elements of which at least one reflector element is pivotable with respect to another reflector element about an axis parallel to the elongated flashtube, to selectively direct light flashes from the tube to selective directions,

wherein, in accordance with the invention, the reflector elements have a curvature which lies in the area (R) between curves defined by equations A and B herein:

$$A: y^2 = 13{,}4 \times -0{,}3722\, x^2 \text{ with } 0 < y < 12{,}3 \text{ and}$$
$$B: y^2 = 18 \times -0{,}5233\, x^2 \text{ with } 0 < y < 11$$

and wherein the curvature of the reflector elements, at values of y at the lower end of the range is close to the curve defined by equation B, and said curvature of the reflector element varies smoothly within said area (R) to approach the curve defined by equation A as the value of y increases towards the upper end of its range.

4,298,910

ROLLER SKATE WHEEL WITH SELF-CONTAINED GENERATOR

Robert T. Price, Canoga Park, Calif., assignor to RJM Industries, Inc., Franklin, Wis.

Filed Feb. 19, 1980, Ser. No. 122,674

Int. Cl.³ F21L *13/00*

U.S. Cl. 362—35 **4 Claims**

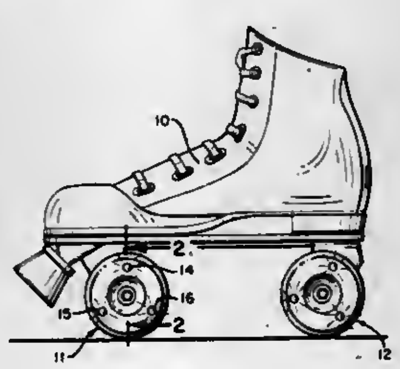

1. A roller skate wheel including, in combination:

(a) an inner stationary body for securement to a roller skate axle;

(b) an outer body surrounding said inner stationary body;

(c) bearings rotatably mounting said outer body to said stationary body;

(d) at least two light emitting means incorporated in said outer body for emitting light from the outboard side of the outer body of said skate wheel when energized;

(e) a permanent magnet secured to said inner body; and

(f) electrically conducting windings embedded in said outer body and connected to said light emitting means, said windings being in magnetic flux coupling relationship with said permanent magnet so that upon rotation of said outer body, alternating current is generated in said windings for energizing said light emitting means.

4,298,911

LIGHTING DEVICE FOR CREATING PUBLIC ATTRACTION

Richard T. Headrick, Irvine, Calif., assignor to Pichel Industries, Inc., Rancho, Calif.

Continuation-in-part of Ser. No. 98,864, Nov. 30, 1979, abandoned. This application Apr. 28, 1980, Ser. No. 144,369

Int. Cl.³ F21V *21/30*

U.S. Cl. 362—35 **43 Claims**

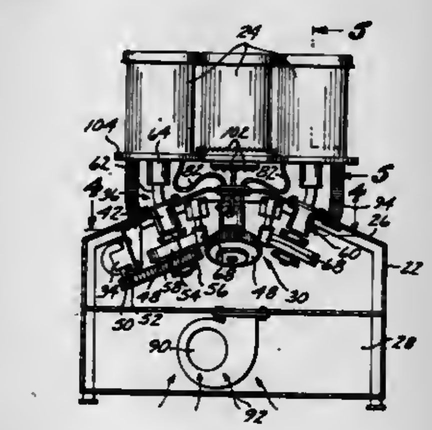

1. A lighting device comprising:

a base;

a plurality of light sources, each light source being mounted to the base;

first means mounted to the base for individually varying angular positioning of each light source relative to the vertical direction and for simultaneously causing each light source to orbit a respective centerpoint without causing rotation of each light source about an axis.

4,298,912

ATTACHMENT FOR A VEHICLE DOME LIGHT

Miles B. Dearth, Columbus, Ohio

Filed Oct. 9, 1979, Ser. No. 82,982

Int. Cl.³ B60Q *1/06*

U.S. Cl. 362—66 **8 Claims**

1. An attachment for a vehicle dome light comprising, in combination, base means including a peripheral base portion that substantially conforms with the periphery of the frame of said dome light, and a central spherical portion provided with a spherical inner surface, a spherical outer surface, and a central opening; mounting means on said base means for detachable engagement with said dome light frame; and light transmitting means moveably mounted on the base means for directing a path of light therefrom and including an outwardly facing surface confronting said inner spherical surface, an inwardly facing surface confronting said outer spherical surface, and a shank portion extended freely through said central opening of the base means to permit articulation of the light transmitting means relative to the base means in all radial directions about

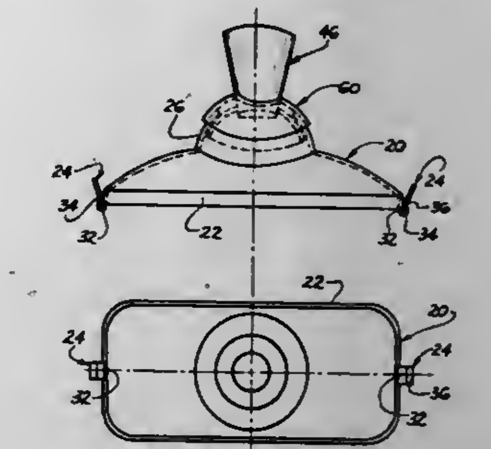

a common center for said spherical surfaces so as to vary the angle of said path of light.

4,298,913

ILLUMINATING APPARATUS

Michael J. Lozar, 835 W. Magnolia, Auburn, Ala. 36830

Filed Nov. 21, 1979, Ser. No. 96,537

Int. Cl.³ F21L *15/08*

U.S. Cl. 362—103 **20 Claims**

1. An illuminating apparatus comprising:

(a) a battery pack;

(b) a cable electrically connected to and leading from said battery pack; and

(c) a lamp element having a bulb housing, a bulb in said housing for electrically connecting to said cable, and a clip connected to said bulb housing, said clip having a pair of spaced opposed clip members with opposed friction surfaces defining a rearwardly opening slot, said clip members being yieldable with respect to each other for frictionally engaging opposite surfaces of a plate on which the illuminating member is to be mounted.

4,298,914
ELECTRIC FIRING DEVICE
Alvin L. Long, Civilian Gen. Del., Beale Air Force Base, Calif. 95903
Continuation-in-part of Ser. No. 906,092, Jun. 23, 1978, abandoned. This application Nov. 5, 1979, Ser. No. 91,553
Int. Cl.³ F41C *1/34*
U.S. Cl. 362—112 **1 Claim**

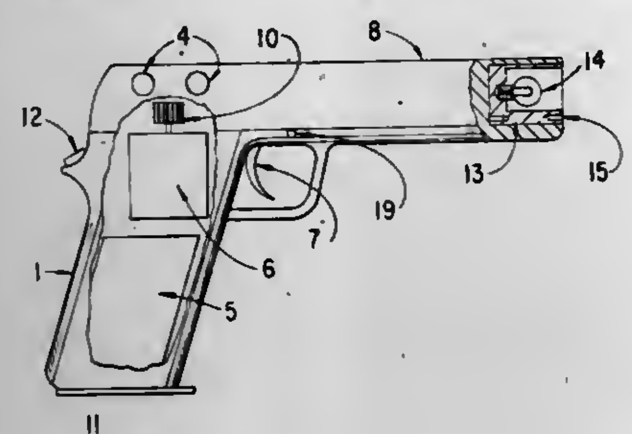

1. In a electric firing device for firing rockets, said firing device being inherently capable of being used for firing rockets from a mortar tube, and having batteries and triggering device, said firing device having a sighting device attached, in combination with a hand held electric generator, and a light projecting unit for automatic pistols, what is new comprizing:
A. an attachable electric firing device with a simila size and construction of a military 45 caliber automatic pistol, containing a battery and generator,
B. said battery and generator being contained in a removable magazine like container,
C. a slide portion on top of the pistol shaped electric firing device that will activate the electric generator when worked back and forth,
D. a trigger switch on said firing device for supplying a electric pulse from the battery or generator,
E. a removable light projecting unit contained in a muzzle cavity of the electric firing device, said unit having external and internal female electric plugins,
F. a lug groove extending along the full length of the top portion of the slide for attaching to a weapon,
G. a lug groove extending along the full length of the side portion of the slide for attaching a suitable sight,
H. a pistol shaped electric firing device applied to a high angle of fire mortar tube, said mortar tube having its breech cap removed to fire rockets horizontally,
I. electric terminals on the side of the piston shaped electric firing device for attaching trailing wires from any explosive device or weapon that can be fired by a electric pulse.

4,298,915
NIGHT LIGHT APPARATUS
Adolph E. Goldfarb, 4614 Monarca Dr., Tarzana, Calif. 91356, and Eloane Dantzer, Redondo Beach, Calif., assignors to Adolph E. Goldfarb, Tarzana, Calif.
Filed Feb. 9, 1979, Ser. No. 10,923
Int. Cl.³ F21P *1/02*
U.S. Cl. 362—124 **19 Claims**

1. A night light apparatus for a child comprising:
(a) means defining a representation of at least a portion of a figure, including a three-dimensional contoured face made of opaque material;
(b) movable means movably supported on said figure-defining means and defining a representation of an extremity of the figure, said movable means including means for supporting a light source, said movable means being movable between a first position and a second position; and
(c) electrical circuit means on said figure-defining means and electrically connected to said light source support means, said circuit means including an off/on switch operatively associated with said movable means so that said switch is on when said movable means is in said first position and said switch is off when said movable means is in said second position, said movable means being proportioned and configured so that when said movable means is in said

first position and said switch is on, the light source is in close proximity to the face and so positioned relative to the face that the light from the light source will fully illuminate the face without creating any significant amount of shadow on said face.

4,298,916
LIGHTING SYSTEM WITH BAFFLE
Sylvan R. Shemitz, Sunbrook Rd., Woodbridge, Conn.
Continuation-in-part of Ser. No. 783,676, Apr. 1, 1977, Pat. No. 4,173,034. This application Jul. 26, 1977, Ser. No. 819,067
Int. Cl.³ F21V *5/02*
U.S. Cl. 362—127 **4 Claims**

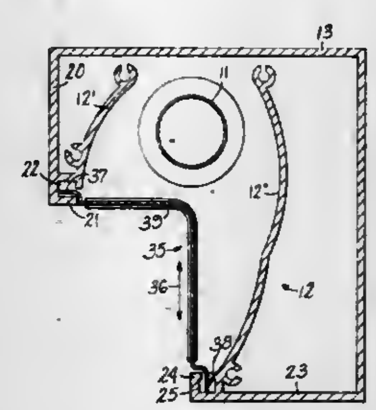

1. A task-oriented lighting system for use with a task supported in a substantially horizontal position and adapted to be viewed from a first direction and from an observation point located at elevations between sitting eye height and standing eye height, comprising an elongated light source having its long axis substantially perpendicular to said first direction, said light source being an element of a luminaire which includes a housing and at least one reflector, the housing being provided with at least one slot disposed parallel to the axis of the light source, and the system including a baffle interposed between the light source and the task and extending laterally far enough to intersect most vertical planes passing through the observation point and the task, the baffle being mounted in said slot and laterally adjustable therealong, whereby light from the source which could cause veiling reflections from the task is intercepted.

4,298,917
MOTION LIGHT DEVICE
Donna L. Ware, 8001 SW. Fifth St., North Lauderdale, Fla. 33068
Filed Nov. 1, 1979, Ser. No. 90,427
Int. Cl.³ F21L *7/00*
U.S. Cl. 362—157 **6 Claims**

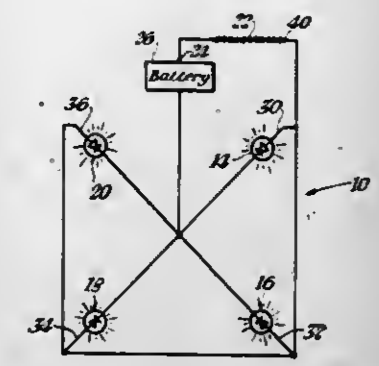

1. A signaling system comprising:
at least one signaling means having a first terminal connectable to an electrical power source and a second terminal,
said signaling means for providing an indication of movement in any direction,
a switching means having a first end and second end, said second end connected to said second terminal,
said first end connectable to an electrical power source,
said switching means includes interconnected conductive links,
said switching means for providing make and break electrical contact responsive to movement of said signaling system in any direction for providing electrical switching of said signaling means.

4,298,918
FLUORESCENT FIXTURE SOCKET
Paul T. Metcalf, II, Methuen, Mass., assignor to Keene Corporation, New York, N.Y.
Filed Jun. 13, 1980, Ser. No. 159,370
Int. Cl.³ F21S *3/00*
U.S. Cl. 362—217 **6 Claims**

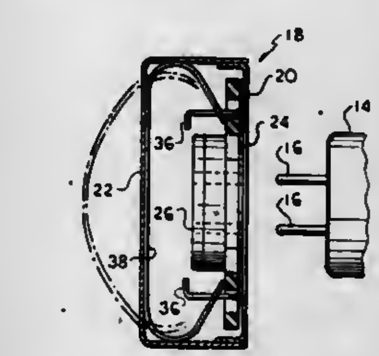

1. A fluorescent fixture socket assembly comprising:
a housing having front and rear surfaces;
an opening in said front surface;
a fluorescent terminal mounted within said housing and accessible through said opening, said terminal including a body portion containing a pair of fluorescent tube contacts and having a pair of holes extending therethrough on opposite sides of said contact;
a pair of posts secured or formed within said housing to said front surface and extending rearwardly on opposite sides of said opening, said posts each passing through one of said body portion holes whereby said terminal floats on said posts; and,
a strip of flat spring material having opposite end portions and a center portion, said end portions each engaging said terminal body portion and said center portion engaging said housing rear surface whereby said spring material resiliently biases said terminal toward said housing front surface.

4,298,919
LAMP HOUSE STRUCTURE FOR ILLUMINATION DEVICES
Yukinori Karasawa, Tokyo, Japan, assignor to Tokyo Kogaku Kikai Kabushiki Kaisha, Tokyo, Japan
Filed Sep. 5, 1979, Ser. No. 72,693
Claims priority, application Japan, Sep. 11, 1978, 53-124445[U]
Int. Cl.³ H01R *33/00;* F21V *25/00*
U.S. Cl. 362—226 **3 Claims**

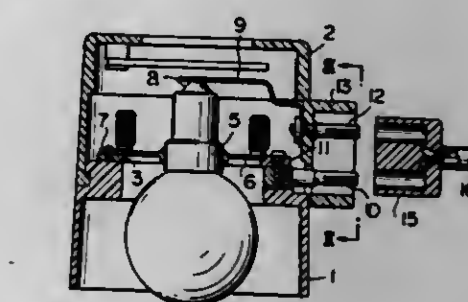

1. A lamp house for an illuminating device, which comprises a body, a cap which is adapted to be detachable attached to the body, means for mounting at least one illumination lamp, at least a pair of electrically conductive jacks respectively connected with said lamp and adapted to be mechanically and electrically engaged with a connector element for a power supply cable, one of said jacks being securely mounted on said body and the other being securely mounted on said cap such that removal of said cap from said body is prevented when the jacks are engaged with said connector element.

4,298,920
AUTOMATIC GEL CHANGER FOR A SPOTLIGHT
Lewis Glock, 391 W. Jericho Turnpike, Huntington, N.Y. 11743, and Robin M. Tannenbaum, 90 Bedford St., New York, N.Y. 10001
Filed Jun. 7, 1979, Ser. No. 46,296
Int. Cl.³ F21V *7/00*
U.S. Cl. 362—281 **4 Claims**

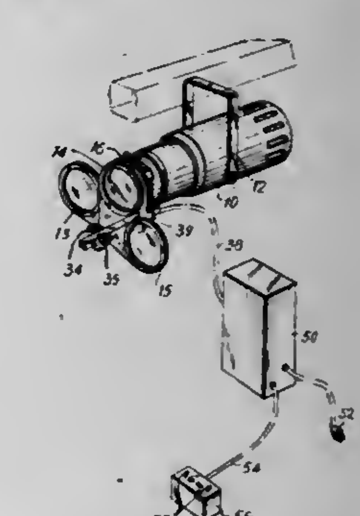

1. A remote gel changer for a spotlight, emitting a beam of light, comprisng a gel frame for motion between a removed position and a position for intercepting said beam of light, rotary solenoid means for causng said motion of said frame, electrical means for operating said solenoid, remote switch means for causing said electrical operation and a damper connected to said frame for providing smooth motion of said frame as caused by said rotary solenoid.

4,298,921
LAMP

Jens C. Krogsrud, Oslo, Norway, and Kai O. Soerensen, Lyngby, Denmark, assignors to Jac. Jacobsen A/S, Oslo, Norway
Filed Oct. 23, 1979, Ser. No. 87,482
Claims priority, application Norway, Oct. 24, 1978, 783593
Int. Cl.³ F21V *7/00*
U.S. Cl. 362—346 **11 Claims**

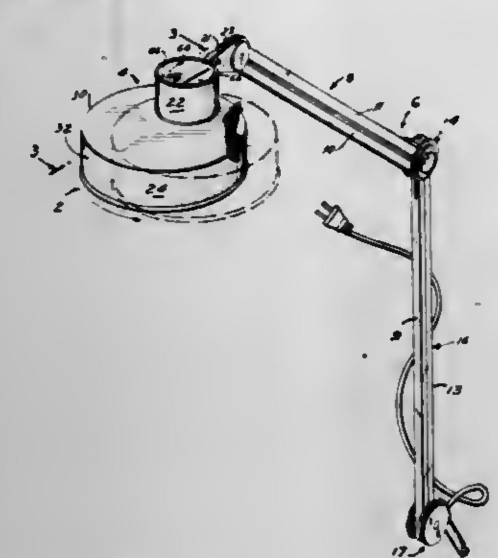

1. In a lamp structure, the combination of, a lamp head assembly which is adapted to be supported in a position over a work area and provide substantially uniform lighting with the light being directed from a generally horizontally extending zone, and support means for said lamp head, said lamp head comprising a shade which is generally circular in plan, a reflector assembly mounted in said shade, and light source means, said shade and support means having mating rotatably engaged portions, said mating portions of said shade and said support means being eccentrically located with respect to said shade, said shade having an opening therethrough at said mating portions and said light source means comprising a lamp bulb mounted in a socket in said support means above said central opening and extending therethrough to a position within said reflector assembly, said reflector assembly having a plurality of flat faceted reflecting surfaces located at predetermined angles with respect to each other and to said bulb to reflect light from said bulb evenly over said area in an oval pattern extending from directly beneath the lamp shade to a position which is a substantial distance away from the shade; said faceted surfaces of the shade defining three groups of facets including a first group of polygonal facets extending from positions adjacent said shade opening downwardly away from said opening towards the peripheral edge of the shade remote from said opening and at a transverse angle to each other, a second group comprising a single facet lying in a plane parallel to the plane of said opening partially surrounding said opening and extending away therefrom in a direction opposite to said first group of facets, and a third group of flat polygonal facets spaced from said opening and extending downwardly at slight angles to the vertical; said third group of facets being located on the side of said opening opposite said first group of facets with at least some of said facets in the third group extending to the side of the opening on which the first group is located.

4,298,922
ROTATABLY ADJUSTABLE TROUBLE LAMP SHIELD

Cret E. Hardwick, 2420 "B" St., Box 922, Baker, Oreg. 97814
Filed Nov. 2, 1979, Ser. No. 90,586
Int. Cl.³ F21V *15/00*
U.S. Cl. 362—376 **12 Claims**

1. A rotatably adjustable light shield for shielding and suspending a portable trouble lamp of the type having an elongated handle with an electric light mounted on one end, comprising:
(a) a shield member for substantially enclosing said electric light of said lamp, said shield member having a top end and a bottom end and an aperture on one side for the transmission of light therethrough;
(b) a mounting means attached to the bottom end of said shield member for mounting said shield member onto said light bearing end of said trouble light handle;
(c) a rotatably adjustable suspension means mounted onto the top end of said shield member for providing a rotatably adjustable suspension mount for said shield member, including:
(i) a plate having a circular array of regularly spaced detent cavities mounted onto the top end of said light shield;

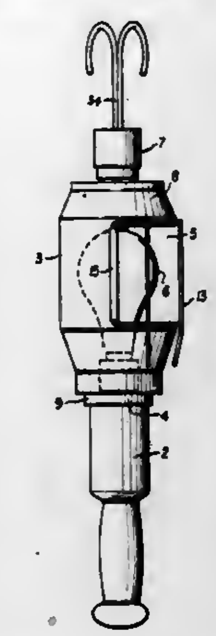

(ii) a detent ball retainer rotatably mounted over said plate and having at least one detent ball receivable into each of said detent cavities for retaining said light shield in any of the angular positions associated with each of said detent cavities and for transmitting a tactile indication of the amount of rotary adjustment made when said light shield is mounted onto a trouble lamp and said handle of said trouble lamp is manually rotated relative to said suspension means, and
(iii) a suspension hook assembly mounted onto said detent ball retainer for suspending said trouble lamp.

4,298,923
ASSEMBLED FUSE LAMPHOLDER OF LIGHT SET

Shong D. Lin, No. 42, Chu-Wei Tsi, Ho-Ping Rd., Hsin-Chu City, Taiwan
Filed Aug. 2, 1979, Ser. No. 63,097
Int. Cl.³ F21P *1/02*
U.S. Cl. 362—392 **3 Claims**

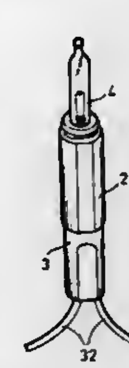

1. A holder for a decorative light bulb comprising:
a cylindrical sleeve for receiving said bulb at one end thereof;
a fuse seat mounted within said sleeve and having first and second electrical fuse conduction paths therethrough connecting to said bulb when received in said sleeve; and
a base extending into the other end of said sleeve for mounting electrical connections to electrically connect to said conduction paths so that current is supplied to said bulb via said conduction paths.

4,298,924
SWITCHING REGULATOR CIRCUIT WITH PHASE SHIFT SUBTRACTION

Luther L. Gennit, Scottsdale, Ariz., assignor to Honeywell Information Systems Inc., Phoenix, Ariz.
Filed Oct. 1, 1979, Ser. No. 80,642
Int. Cl.³ H02P *13/18*
U.S. Cl. 363—46 **2 Claims**

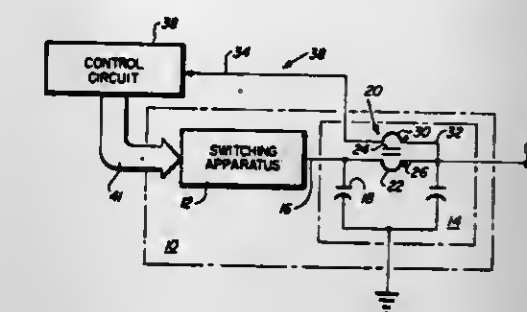

1. An apparatus for stabilizing a switching regulator circuit having a choke located at the output thereof, comprising:
a. sensing winding connected to the output of said switching regulator circuit in magnetic communication with said choke for subtracting the phase shift thereacross from the output of said switching regulator circuit to produce a feedback signal; and
b. a control circuit operatively connected to receive said feedback signal and to produce control signals to said switching regulator circuit in response thereto whereby said control circuit stabilizes said switching regulator circuit and including an output terminal connected to receive the output of said switching regulator circuit and wherein said choke includes an electrically conductive slug connected in series with the output of said switching regulator circuit with one end connected to said output terminal; at least one magnetically conductive ring disposed about said slug to form a core; and a wire disposed within said slug and electrically insulated therefrom, one end of said wire being connected to said output terminal, said wire extending from said one end thereof through said slug from said one end of said slug toward another opposite end thereof.

4,298,925
TRANSISTORIZED INVERTOR

John R. Melling, Gosport, England, assignor to Plessey Handel und Investments AG, Zug, Switzerland
Filed Jul. 10, 1979, Ser. No. 56,261
Int. Cl.³ H02M *7/537*
U.S. Cl. 363—131 **4 Claims**

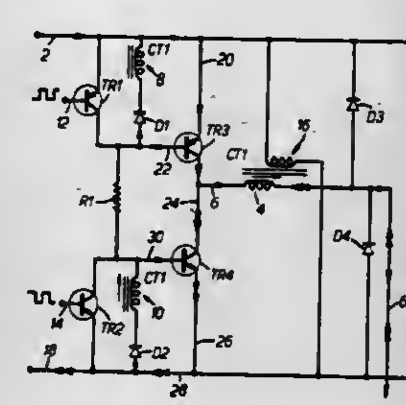

1. A transistorised invertor for inverting direct current to at least one phase of alternating current so as to provide an output current of said invertor, said invertor having an input line and an output line, comprising:
a current transformer having a primary in said output line of the invertor, and having at least one pair of secondaries, one pair of secondaries for each said at least one phase, said at least one pair of secondaries including first and second secondaries;
at least one pair of base drive circuits, one pair of base drive circuits for each said at least on phase, said at least one pair of base drive circuits including first and second base drive circuits which respectively include said first and second secondaries of the current transformer; and
at least one pair of transistors, one pair of transistors for each of said at least one phase, each pair of transistors including first and second main transistors, each said first and second main transistors having a base;
said first and second secondaries being connected to the base of said first and second main transistors, respectively, said current transformer feeding a proportion of the output current of the invertor, via said first and second secondaries, to the base of said first and second main transistors, respectively, in order to provide base drive current thereto, said invertor including a respective diode associated with each secondary and connected thereto for preventing reverse current from passing through said each secondary.

4,298,926
POWER CONVERTER

James M. Black, Quartz Hill, Calif., assignor to The United States of America as represented by the Administrator of the National Aeronautics and Space Administration, Washington, D.C.
Filed Jun. 29, 1979, Ser. No. 53,652
Int. Cl.³ H02M *7/537, 7/25*
U.S. Cl. 363—132 **8 Claims**

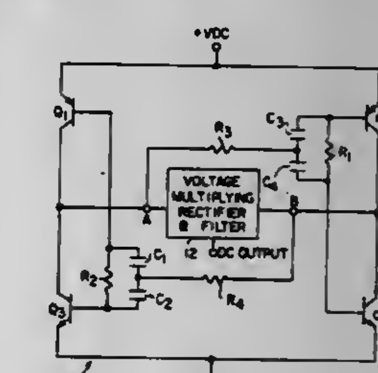

1. A converter having four transistors interconnected at four junctions to form a four-sided bridge circuit, with one transistor on each of the four sides of the bridge, and means for alternately turning on and off said transistors in pairs on opposite sides so that an AC voltage is obtained from one pair of opposite junctions while a DC voltage is applied to the remaining pair of junctions, one of said switches in each pair being of one conductivity type and the other of said switches in each pair being of opposite conductivity type, with transistors connected to common DC junctions being of the same conductivity type, said means for alternately turning on and off said transistors comprising RC timing circuits cross coupling control terminals of said transistors with control terminals of both transistors in adjacent sides of said bridge being AC coupled to an AC junction on the opposite side of said bridge, each of said RC timing circuits being comprised of a resistor connected between control terminals of said transistors on adjacent sides of said bridge, two capacitors connected in series between control terminals of said transistors on adjacent sides of said bridge, and a resistor connected between the AC junction on the opposite side of said bridge and a junction between said series connected capacitors, whereby said transistors connected in a bridge circuit are operated in a free running multivibrator mode for converting said DC voltage to AC voltage.

4,298,927
COMPUTER INSTRUCTION PREFETCH CIRCUIT
Neil C. Berglund, Kasson; William G. Kempke, and William C. Richardson, both of Rochester, all of Minn., assignors to International Business Machines Corporation, Armonk, N.Y.
Filed Oct. 23, 1978, Ser. No. 954,068
Int. Cl.³ G06F *9/22*
U.S. Cl. 364—200 **29 Claims**

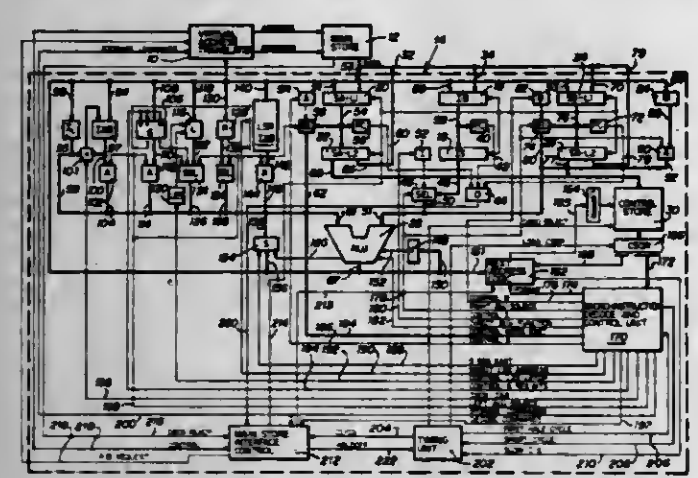

1. A prefetch circuit for retrieving sequentially stored user instruction codes from a main store of a digital computer prior to use by a computation unit of the computer, the computer including a control store having a collection of microinstructions which are selectively called up by user instructions and decoded for execution by the computation unit and a main store control which generates the instruction code address for the next instruction codes to be retrieved for use by the computation unit, comprising in combination,
(a) register means for storing instruction codes retrieved from the main store, said register means connected to deliver the instruction codes therein to said computation unit,
(b) means for determining the number of main store fetch operations required to fill said register means with instruction codes retrieved from said main store, and
(c) means responsive to the decoding of selected microinstructions for initiating said determined number of main store fetch operations to fetch the next sequential instruction codes starting at said instruction code address from the main store and transferring said next sequential instruction codes into said register means.

4,298,928
DATA TRANSFER SYSTEM FOR DATA EXCHANGE BETWEEN TWO OPERATION PROCESSORS
Kunihiko Etoh, Toyota; Tamotsu Ishigaki, Nagoya, and Kuniyuki Niwa, Kariya, all of Japan, assignors to Toyoda-Koki Kabushiki-Kaisha, Kariya, Japan
Filed Oct. 26, 1978, Ser. No. 954,740
Claims priority, application Japan, Oct. 28, 1977, 52-129985
Int. Cl.³ G06F *3/04*
U.S. Cl. 364—200 **6 Claims**

1. A data transfer system comprising:
two operation processors each capable of outputting control data and address data to be transferred to the other of said two operation processors; and
a pair of data transfer devices associated respectively with said two operation processors and each including
addressable data memory means for storing said control data and said address data to be transferred between said two operation processors;
first signal generating means connected to an associated one of said operation processors for generating a first transfer control signal during the time when said associated one of said operation processors accesses said data memory means;
first access means connected between said data memory means and said associated one of said operation processors and operated in response to said first transfer control signal for transferring said control data therebetween;
an address counter for outputting address data to selectively designate memory addresses of said data memory means;
first and second data transmitters for transferring said control data and address data in serial fashion upon receiving the same in parallel fashion, respectively;
second signal generating means connected to said first signal generating means for periodically and selectively generating second and third transfer control signals during the time when said first signal generating means is not generating said first transfer control signal;
second access means connected between said address counter, said data memory means and said first and second data transmitters and operated in response to said second transfer control signal for applying said address data from said address counter to said data memory means and said second data transmitter and for applying to said first data transmitter said control data read out from said data memory means;

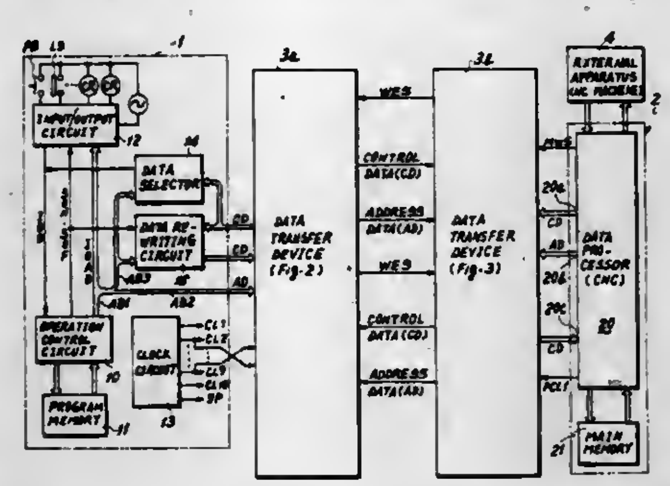

first and second data receivers connected to said first and second data transmitters provided in the other of said data transfer devices for receiving therefrom said control data and said address data in serial fashion so as to output the same in parallel fashion, respectively;
third access means connected to said first and second data receivers and said data memory means and operated in response to said third transfer control signal for storing said control data output from said first data receiver in one of said memory addresses of said data memory means designated by said address data output from said second data receiver; and
counter address advancing means connected to said first and second data receivers and also connected to said address counter provided in said other data transfer device for applying a signal to increment the content of said address counter provided in said other data transfer device connected thereto each time both of said first and second data receivers complete receipt of said control data and said address data.

4,298,929
INTEGRATED MULTILEVEL STORAGE HIERARCHY FOR A DATA PROCESSING SYSTEM WITH IMPROVED CHANNEL TO MEMORY WRITE CAPABILITY
Anthony J. Capozzi, Binghamton, N.Y., assignor to International Business Machines Corporation, Armonk, N.Y.
Filed Jan. 26, 1979, Ser. No. 6,980
Int. Cl.³ G06F *13/00*
U.S. Cl. 364—200 **1 Claim**

1. In a data processing system including a processing unit, at least one channel connected to said processing unit, a first high speed, low capacity memory cache, a second lower speed, high capacity main memory and an input/output register interconnecting said cache and said processing unit, wherein data is stored in said main memory in the form of full words, each full word comprising a particular number of bytes and having an upper and lower boundary, and wherein data is stored in said cache in the form of cache pages each page comprising a plurality of full words, said channel providing input data for storage in said main memory, said input data being either in the form of full words whose boundaries correspond to boundaries of full words in said main memory or in the form of partial words which have less bytes than said particular number of bytes and the boundaries of which do not coincide with the boundaries of full words in main memory,
improved channel to memory write means for storing information in said main memory in response to a partial channel write request wherein the data supplied by said channel and loaded into said I-O register includes a partial word whose boundaries do not coincide with the boundaries of a full word in said main memory, comprising:
a swap buffer adapted to receive data from said input/output register and having at least one cache page storage capability;
an error correction circuit and logic subassembly connected between said input/output register and said main memory, said subassembly adapted to receive data from said swap buffer;

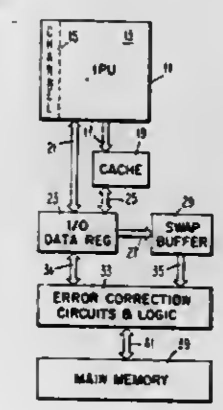

means responsive to a partial channel write request to determine if the data addressed by the channel write request is in said cache (a hit) or if the data addressed is not in said cache (a miss);
first means responsive to a hit to generate a full word by retrieving the addressed data from the cache and supplementing the partial word from said partial channel write request with the data from the cache in said I-O register a plurality of bytes at a time;
means responsive to said first means to transfer said full word generated by said first means to said main memory;
second means responsive to a miss to release said IPU to load said partial word from said I-O register into said swap buffer to retrieve the addressed data from said main memory and to combine the data from said partial channel write stored in said swap buffer with data from main memory; in said error correction circuits and logic subassembly, and
means responsive to said second means to store said combined full word to said main memory,
whereby said IPU is available for executing instructions unrelated to channel data transfers, while information to complete partial channel write requests is being retrieved and while said data is being transferred from said swap buffer to said memory.

4,298,930
APPARATUS FOR DATA TRANSFER TO MICROPROCESSORS
Georg Hauboer, Berg; Jürgen Wesemeyer, Nuremberg, and Hans Schrumpf, Oberasbach, all of Fed. Rep. of Germany, assignors to Robert Bosch GmbH, Stuttgart, Fed. Rep. of Germany
Filed Mar. 13, 1979, Ser. No. 20,225
Claims priority, application Fed. Rep. of Germany, Apr. 1, 1978, 2814124
Int. Cl.³ G06F *3/00*
U.S. Cl. 364—200 **7 Claims**

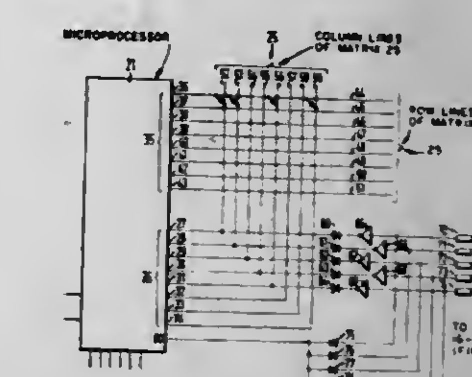

1. An apparatus for transfer of data to and from a microprocessor (21), said microprocessor having
a first set of input-output terminals (26; 27–34) and a control terminal (80) to control input/output operations;
said apparatus comprising
a diode matrix (25) having a set of row lines and a set of column output lines (52–59) directly connected to said first set of microprocessor terminals (26; 27–34) for transferring primary data signals during a first time interval;
means (16–20) for generating supplementary signals representative of supplementary data
coupling means (70–74) connected to said supplementary signal generating means;
and signal switching means (60–64; 65–69) controlled by signals from said control terminal (80) of said microprocessor to apply, selectively, the primary data during the first time interval or the supplementary data during a second time interval to respective terminals of said first set comprising
a plurality of diodes (60–64) and a plurality of inverters (65–69) wherein respective input-output terminals (26; 27–34) are connected to the coupling means through the series connection of a respective one of said diodes and a respective one of said inverters;
and coupling elements (75–79) coupling said control terminal (80) of the microprocessor (21) to the input of said inverters;
and wherein the relative polarities of the primary data signals, the output from the control terminal of said microprocessor, the polarity direction of the diodes (60–64) and the direction of inversion of the inverters are so poled that; when said control terminal (80) carries a first logic signal (e.g.:"0"), the inverter and the diode prevent passage of supplementary data therethrough and when said control terminal (80) carries a second logic signal (then: "1") the inverter is effective to unblock the diode and permit passage of supplementary data therethrough for application to the respective terminal of said first set of terminals so that, by change of polarity of the control signal, supplementary data are, selectively, blocked from application to the terminals of the first set during said first time interval and thereby to admit said primary data to said microprocessor and admitting signals representative of supplementary data during the second time interval, spurious paths for said signals representative of supplementary data blocked by the diodes in the diode matrix.

4,298,931
CHARACTER PATTERN DISPLAY SYSTEM
Tsuguji Tachiuchi; Shigeru Hirahata, and Terahiro Takezawa, all of Yokohama, Japan, assignors to Hitachi, Ltd., Tokyo, Japan
Filed Jun. 1, 1979, Ser. No. 44,379
Claims priority, application Japan, Jun. 2, 1978, 53-65685; Nov. 11, 1978, 53-139275; Dec. 18, 1978, 53-157824
Int. Cl.³ G06F *13/00.*
U.S. Cl. 364—200 **16 Claims**

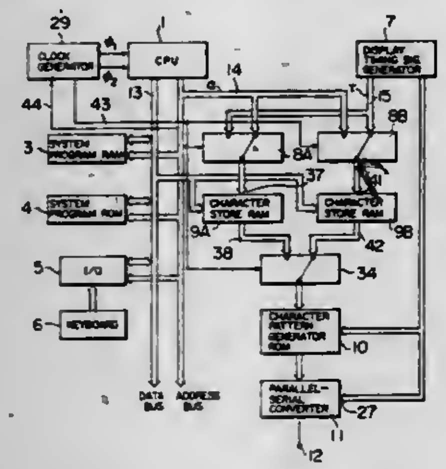

1. A data processing system comprising:
(a) central processing circuit means including means for producing a plurality of different kinds of address signals;
(b) a plurality of random access memories (RAMs) for storing data, said RAMs being connected to said central processing circuit means to selectively receive data therefrom for storage in response to at least one of said kinds of address signals;
(c) memory switching means connected to said RAMs to sequentially switch said different kinds of address signals received from said central processing circuit means in alternate relation simultaneously to the respective RAMs to allow simultaneous accessing of the RAMs in response to the respective address signals; and
(d) output signal switching means for selectively applying to an output information output signals read out from said RAMs in response to at least one other of said kinds of address signals and in synchronism with the switching operation of said memory switching means, thereby permitting simultaneous execution of a plurality of different operations in association with said RAMs with simultaneous application of different kinds of address signals thereto.

4,298,932
SERIAL STORAGE SUBSYSTEM FOR A DATA PROCESSOR
Jack G. Sams, Boynton Beach, Fla., assignor to International Business Machines Corporation, Armonk, N.Y.
Filed Jun. 11, 1979, Ser. No. 47,005
Int. Cl.³ G06F *9/34, 15/16*
U.S. Cl. 364—200 **22 Claims**

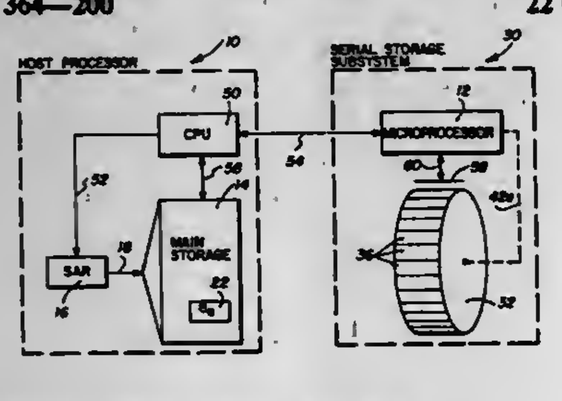

1. A data processing system comprising:
first processor means for generating instructions and push and pop operation codes;
first data storage means coupled to said first processor means and including a plurality of data storage locations for storing data;
second processor means coupled to said first processor means;
second data storage means coupled to said second processor means and including a plurality of data storage locations for storing data, each of said data storage locations of said second data storage means having a larger storage capacity than the storage capacity of each of said data storage locations of said first data storage means;
control means coupled to said first processor means and to said first data storage means to receive said instructions and codes generated by said first processor means for addressing one of said plurality of data storage locations of said first data storage means as an access window, such that data stored in said addressed one of said plurality of data storage locations of said first data storage means is provided to said first processor means for transfer to said second processor means to permit said second processor means to address said second data storage means, such that said first processor means thereby gains access to at least one of said plurality of data storage locations of said second data storage means by instructing said control means to address one of said plurality of data storage locations of said first data storage means; and
said second processor means operable in response to said instructions generated by said first processor means for transferring data received from said addressed one of said plurality of data storage locations of said first data storage means between said first processor means and at least one of said plurality of data storage locations of said second data storage means.

4,298,933
DATA-PROCESSING DEVICE INCLUDING MEANS TO SUPPRESS THE EXECUTION OF UNNECESSARY INSTRUCTIONS
Yoshiyuki Shimokawa, Hachioji, and Itaru Tanimoto, Fuchu, both of Japan, assignors to Tokyo Shibaura Denki Kabushiki Kaisha, Kawasaki, Japan
Filed Jul. 3, 1979, Ser. No. 54,577
Claims priority, application Japan, Jul. 8, 1978, 53-83207; Jul. 8, 1978, 53-83209
Int. Cl.³ G06F *9/00*
U.S. Cl. 364—200 **15 Claims**

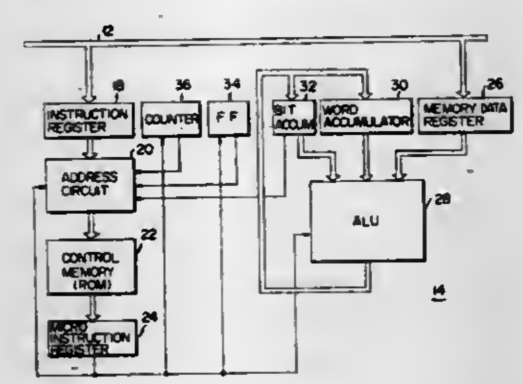

1. A data processing device comprising:
memory means for storing data and machine instructions;
processing means for carrying out the logic operation on at least 1-bit of data and the arithmetic operation on data formed of a plurality of bits, and, where a predetermined condition is established, suppressing the execution of one or more of the following instruction;
a bit accumulator connected to said processing means for holding the result of the logic operation on at least 1-bit of data, the contents of the bit accumulator being used as the predetermined condition; and
means for carrying out the transmission of data between external equipment and the memory means or processing means.

4,298,934
PROGRAMMABLE MEMORY PROTECTION LOGIC FOR MICROPROCESSOR SYSTEMS
Rudolf Fischer, Munich, Fed. Rep. of Germany, assignor to Siemens Aktiengesellschaft, Berlin & Munich, Fed. Rep. of Germany
Filed Aug. 10, 1979, Ser. No. 65,649
Claims priority, application Fed. Rep. of Germany, Sep. 29, 1978, 2842548
Int. Cl.³ G06F *13/00*
U.S. Cl. 364—200 **4 Claims**

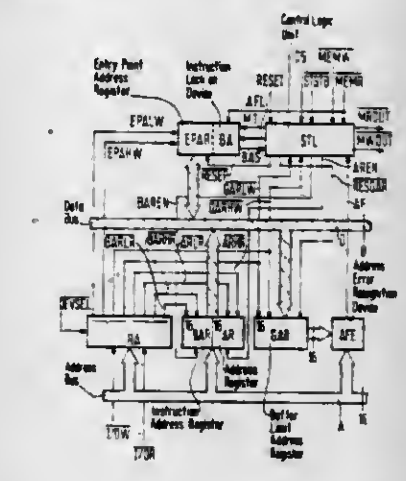

1. A programmable memory protection system for a microprocessor system comprising in combination;
a buffer limit address register adapted to receive and store at least one buffer limit address identifying a memory area to be protected,
an address error recognition device connected to said buffer limit address register and to an address bus of said microprocessor system and responsive thereto for producing an address error signal when the address on said address bus is within the protected memory area,
said address error recognition device comprising a decoder having its inputs connected to a group of the highest order bit lines of the address bus,
said buffer limit address register storing a plurality of binary bits corresponding to a specific memory block, said bits identifying whether or not such block is protected,
a plurality of gates individually connected with said decoder and with said buffer limit address register for comparing the bits stored in said buffer limit address register with the information on said address bus,
circuit means interconnected with said gates for producing an address error signal in response to operation of said gates,
and a control logic unit connected to said address error recognition device and responsive to said address error signal for suppressing a memory write signal.

4,298,935
INTERFACE CIRCUIT FOR COUPLING AN AUTOMATED MAINTENANCE SYSTEM TO A CPU
Ronald E. Lange, Phoenix, and Robert J. Koegel, Glendale, both of Ariz., assignors to Honeywell Information Systems Inc., Phoenix, Ariz.
Filed Oct. 5, 1979, Ser. No. 82,435
Int. Cl.³ G06F *7/00, 11/14*
U.S. Cl. 364—200 **2 Claims**

1. An interface apparatus for coupling an automated maintenance system (AMS) to the CPU of a data processing system comprising:
a first means for converting information from said automated maintenance system into predetermined control signals, said predetermined control signals for controlling the pathways in said CPU accessed by said AMS, said predetermined control signals also for controlling the operations performed by said CPU;
a second means for receiving control point information signals from said CPU, said control point information signals indicating the internal status thereof said second means further including means for transferring said point information signals to said automated maintenance system;

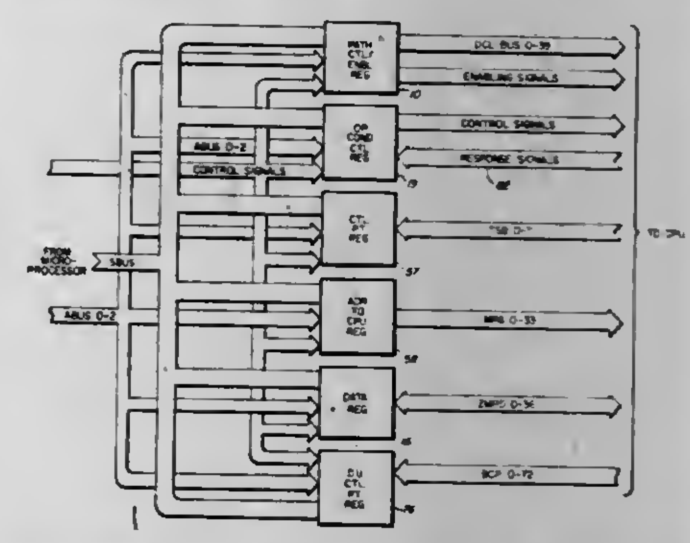

a third means for supplying AMS supplied address information to said CPU for use by it in selected operations;
a fourth means for transferring AMS supplied data to said CPU, said fourth means including apparatus for receiving and holding data from said CPU requested by said AMS by said supplied data; and
a bus means coupling said AMS to said first, second, third and fourth means for supplying the proper information to each said means for performing its operations and for supplying information from said fourth means to said AMS.

4,298,936
ARRAY PROCESSOR
Gerald N. Shapiro, Newton, Mass., assignor to Analogic Corporation, Wakefield, Mass.
Filed Nov. 15, 1979, Ser. No. 94,428
Int. Cl.³ G06F *9/38*
U.S. Cl. 364—200 **11 Claims**

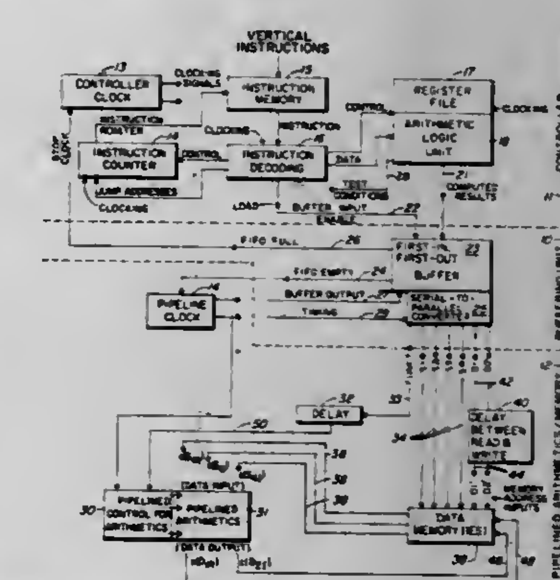

1. An Array Processor comprising in combination:
a controller having serially generated words as an output therefrom;
a buffering unit including a FIFO buffer and a serial-to-parallel converter coupled thereto:
means for coupling said serially generated words to said buffering unit; and,

a pipelined arithmetic unit and memory coupled to said buffering unit and controlled thereby.

4,298,937
Patent Not Issued For This Number

4,298,938
BACKUP CONTROL CIRCUIT FOR KIDNEY DIALYSIS MACHINE

Cheng L. Wang; Charles Soodak, both of Silver Spring, and David Lohr, Ellicott City, all of Md., assignors to Baxter Travenol Laboratories, Inc., Deerfield, Ill.

Filed Jan. 28, 1980, Ser. No. 115,874
Int. Cl.³ B01D *13/00*; G05D *7/06*; G06G *7/57*
U.S. Cl. 364—413 3 Claims

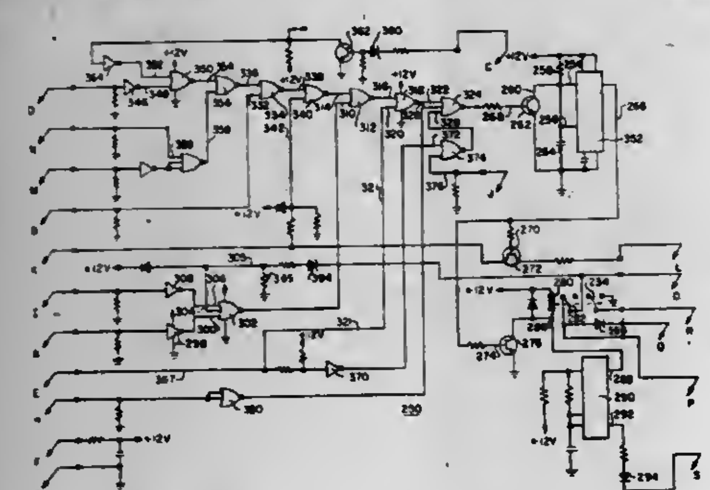

1. A backup control circuit for use with a main control circuit for a kidney dialysis machine, said backup control circuit being operable upon failure of the main control circuit to operate within a predetermined time period to cause closing of a dialysate operate valve and opening of a dialysate bypass valve or stopping of a blood pump when an aberrant condition in the dialysate conductivity, temperature, flow or negative pressure is sensed or when an aberrant condition in the arterial or venous blood pressure is sensed or excessive leakage of blood into the dialysate is sensed and said backup control circuit including control circuit means for controlling operation of said backup control circuit and having input contacts coupled to sensor inputs to the main control circuit, time delay circuit means having an input coupled to said control circuit means and operable to initiate a timing cycle for said predetermined time period upon receiving an error signal from said control circuit means, energizing and de-energizing circuit means having an input coupled to an output of said time delay circuit means and having outputs coupled to points in the main control circuit associated with coils for the dialysate operate valve, the dialysate bypass valve and the blood pump relay and operable upon receiving an operate signal, after said predetermined time period has occurred and the main control circuit has not functioned properly, to close the operate valve, open the bypass valve and stop the blood pump.

4,298,939
METHOD AND APPARATUS FOR APPLYING A REGULATED VOLTAGE

Dale A. Fluegel, Bartlesville, Okla., assignor to Phillips Petroleum Company, Bartlesville, Okla.

Filed Oct. 30, 1978, Ser. No. 955,732
Int. Cl.³ G05F *1/56*; H03K *3/26*; G01V *1/28*
U.S. Cl. 364—421 22 Claims

3. Apparatus comprising:
a computer means;
a transistor switch;
a voltage regulator means having an input and an output, said voltage regulator means providing a regulated voltage at said output in response to an electrical current being supplied to said voltage regulator means;
means for supplying a binary signal from said computer means to said transistor switch; and
means for supplying an electrical current flow to said voltage regulator means only when said transistor switch is turned on by the binary signal from said computer means.

11. A method for supplying a regulated voltage to a computer controlled remote geophone monitoring means which is being used to acquire seismic data, a central control means

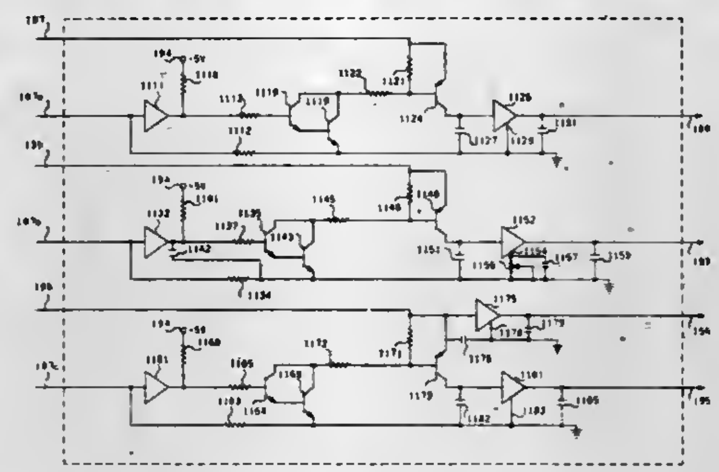

being utilized to control and acquire data from a plurality of remote geophone monitoring means, comprising the steps of:
actuating a transistor switch from a first state to a second state in response to a binary signal from the computer controlling said remote geophone monitoring means;
enabling an electrical current to be supplied to a voltage regulator means during the occurrence of said second state; and
providing a regulated voltage from said voltage regulator means in response to said electrical current being supplied to said voltage regulator means.

4,298,940
SLIPPING DETECTOR SYSTEM FOR VEHICLES

Tomio Tadokoro, Katsuta, and Tatsuro Horie, Mito, both of Japan, assignors to Hitachi, Ltd., Tokyo, Japan

Filed Jun. 7, 1979, Ser. No. 46,330
Claims priority, application Japan, Jun. 10, 1978, 53-69386
Int. Cl.³ G06F *15/20*; H02P *5/50*
U.S. Cl. 364—426 19 Claims

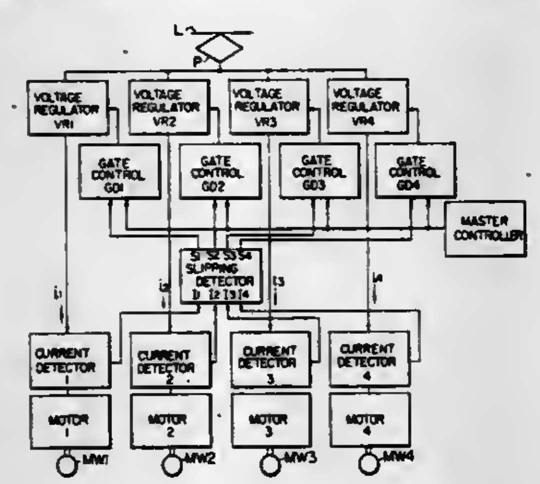

1. A slipping detection system for vehicles having wheels driven by motors, comprising
means for detecting at least one electric value which changes in relation to the rotational speed of at least one of the wheels;
means for detecting the change in said electric value; and
means for detecting the slipping of said one wheel when the change in said electric value associated with said wheel is larger than a predetermined value, including means for

receiving the output of said electric value detector means in a time division manner, memory means for storing a currently-received electric value until a subsequent electric value is received, means for comparing said subsequently-received electric value with said current electric value received previously as stored in said memory means, and means for detecting a slipping of said wheel when the difference between said subsequent electric value and said previously-received stored electric value exceeds a predetermined value.

4,298,941
METHOD FOR CONTROLLING AN INTERNAL COMBUSTION ENGINE

Toshio Furuhashi, Mito, Japan, assignor to Hitachi, Ltd., Tokyo, Japan

Filed Feb. 14, 1980, Ser. No. 121,476
Claims priority, application Japan, Feb. 19, 1979, 54-17329
Int. Cl.³ F02P *5/08, 3/02*; F02B *5/02*
U.S. Cl. 364—431 20 Claims

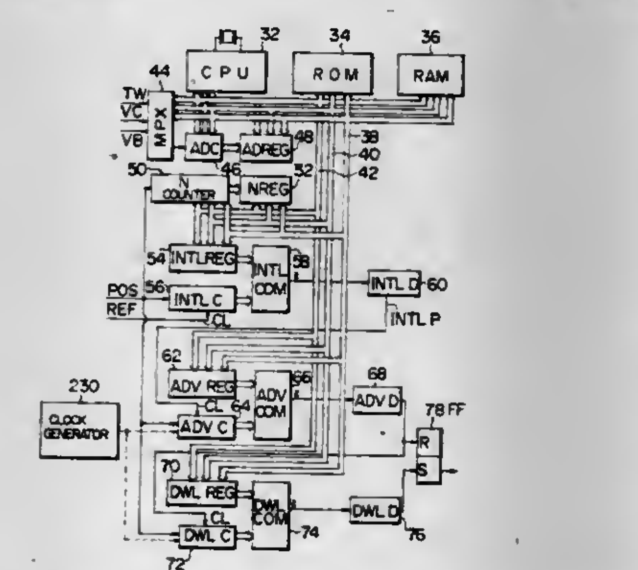

1. A method of operating a processor-controlled apparatus for controlling the operation of a combustion engine, said engine including an output shaft driven by mechanical energy converted from heat energy caused by the combustion of fuel, said engine including a source of electrical energy, ignition means, coupled with said source, for cyclically storing energy supplied from said source and discharging energy to be employed for combustion of fuel, detecting means, coupled to said engine output shaft, for producing a reference signal in response to a predetermined angle of rotation of the engine output shaft, and sensor means for producing signals representative of operational conditions of the engine,
said method comprising, for each cycle of operation of said ignition means, the steps of:
(a) generating a first signal in response to which said ignition means begins the storage of energy from said source and causing said ignition means to store energy for a prescribed charging duration, and
(b) generating a second signal in response to which said ignition means discharges energy stored thereby so as to cause the combustion of fuel in said engine, the time interval from the generation of said second signal to the generation of said first signal corresponding to a predetermined period of time that energy is not being stored by said ignition means,
and wherein step (b) comprises the step of:
(b1) in response to a reference signal from said detecting means, generating first data, the value of which is successively changed from a first prescribed value until the value of said first data corresponds to a value representative of the time at which said second signal is to be generated, and thereupon causing the generation of said second signal, and
wherein step (a) comprises the step of
(a1) in response to the value of said first data corresponding to the value representative of the time at which said second signal is to be generated in step (b), generating second data the value of which is successively changed until the value of said second data corresponds to a value representative of the time at which said first signal is to be generated, and thereupon causing the generation of said first signal,
and wherein, for successive cycles of storage and discharge of energy by said ignition means, step (a) further comprises the step of
(a2) generating the value representative of the time at which said first signal is to be generated by:
(a2-1) generating third data representative of the interval between the time of occurrence of said second signal for a present cycle and the time of occurrence of said second signal for the previous cycle,
(a2-2) generating fourth data representative of said prescribed charging duration, and
(a2-3) generating fifth data representative of the time interval from the generation of said second signal to the generation of said first signal in accordance with the difference between said third and fourth data,
and wherein step (a1) comprises the step of
(a1-1) generating said first signal in response to the value of said second data becoming equal to or greater than the value of said fifth data.

4,298,942
NONLINEAR AMPLITUDE DETECTOR

Henry E. Lee, Columbia, Md., assignor to The United States of America as represented by the Secretary of the Air Force, Washington, D.C.

Filed Dec. 19, 1979, Ser. No. 105,363
Int. Cl.³ G06F *15/20, 7/552*
U.S. Cl. 364—483 8 Claims

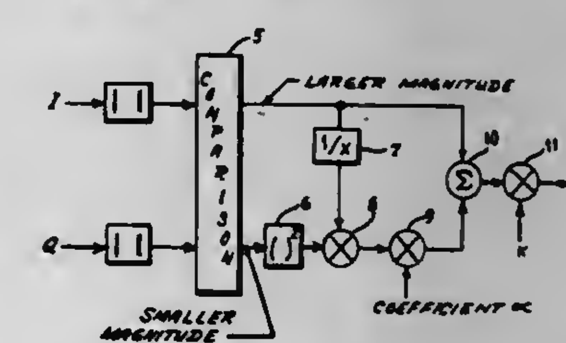

1. A nonlinear amplitude detector comprising
comparator means receiving the inphase and quadrature components of a signal and determining the relative magnitude thereof,
signal component squaring means squaring the smaller magnitude signal component,
means for dividing the squared smaller magnitude signal component by the larger magnitude signal component,
first multiplier means multiplying the quotient thereof by a coefficient α, and
means for summing the output of said multiplier means with the larger magnitude signal component.

4,298,943
HEATING SYSTEM

Clement R. Tompson, 3020 LaPorte, Melrose Park, Ill. 60164, and Garrett Gruner, 1610 W. Kalamazoo, Lansing, Mich. 48915

Filed Jun. 7, 1979, Ser. No. 46,227
Int. Cl.³ G06F *15/20*; G05D *23/19*
U.S. Cl. 364—505 28 Claims

1. A method of controlling the energy released by a furnace for efficiently heating a structure to a desired temperature comprising:
measuring a temperature outside the structure;

delaying the measured outside temperature for a predetermined interval; and

automatically adjusting the rate of a continuous flow of fuel to the furnace as a function of the difference berween the desired temperature of the structure and the delayed, previously measured value of the outside temperature;

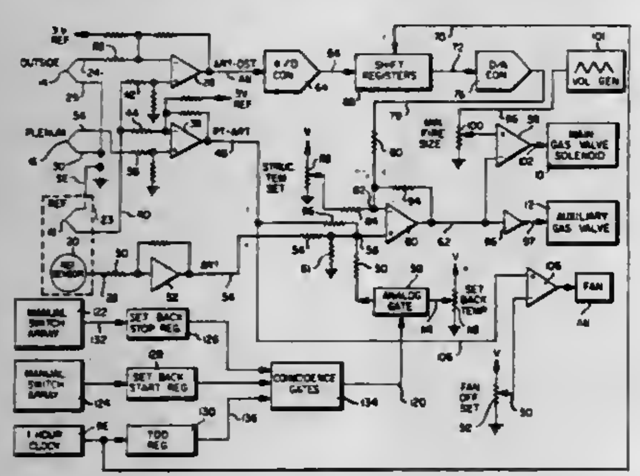

whereby the structure temperature achieved is substantially equal to the desired structure temperature, the furnace operates substantially continuously at a reduced energy input, and the energy input to the furnace and the energy output from the furnace vary in response to changes in the outside temperature.

4,298,944

DISTORTION CORRECTION METHOD AND APPARATUS FOR SCINTILLATION CAMERAS

Everett W. Stoub, Villa Park; James G. Colsher, Schaumburg, both of Ill., and Gerd Muehllehner, Wayne, Pa., assignors to Siemens Gammasonics, Inc., Des Plaines, Ill.

Filed Jun. 22, 1979, Ser. No. 51,176

Int. Cl.[3] G01T *1/20*

U.S. Cl. 364—515 11 Claims

1. A spatial distortion correction method for use in correcting the inherent distortion characteristics of radiation imaging apparatus, the radiation imaging apparatus including data output signals representing image event coordinates, the spatial distortion correction method comprising the steps of:

calculating spatial distortion correction factors at a predetermined number of image event points from orthogonal line pattern test data obtained in an initial off-line test phase;

modifying said spatial distortion correction factors calculated in said calculating step in accordance with image field test data obtained in an off-line test phase, said image field test data including image event data obtained from a uniform image irradiation of said radiation imaging apparatus;

storing said modified spatial distortion correction factors for use in correcting the image event data output signals from said radiation imaging apparatus; and

correcting the image event data output signals from said radiation imaging apparatus during on-line operation in accordance with said modified spatial distortion correction factors.

4,298,945

CHARACTER GENERATING METHOD AND APPARATUS

Derek J. Kyte, Brookthorpe, England; Walter I. Hansen, Cold Spring Harbor, N.Y., and Roderick I. Craig, Cheltenham, England, assignors to Eltra Corporation, Toledo, Ohio

Division of Ser. No. 905,451, May 12, 1978. This application May 3, 1979, Ser. No. 35,488

Int. Cl.[3] G06F *3/14*

U.S. Cl. 364—523 34 Claims

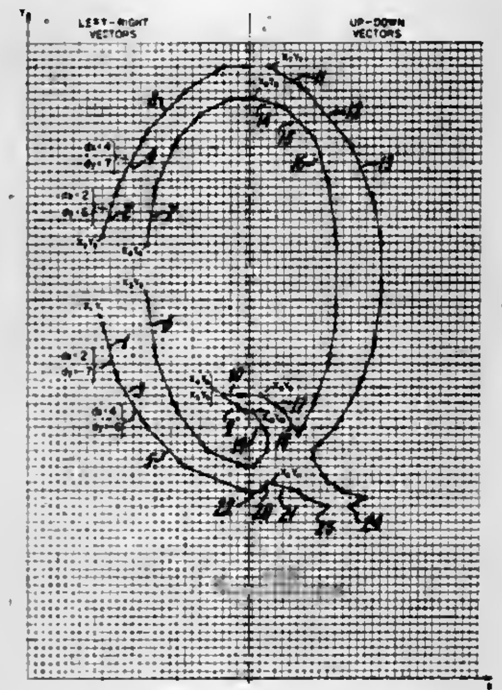

1. A method for encoding characters in relation to a normalized encoding set of first and second coordinates, wherein a character is defined by at least one outline, with storing of the encoded characters for subsequent generation of desired characters from the corresponding, encoded and stored characters, comprising:

(a) storing digital numbers defining the first and second coordinates of the start point of a character outline; and

(b) storing digital numbers representing a plurality of straight line vectors extending successively along the character outline from said start point, each vector being represented by a first digital number defining the first coordinate distance and a second digital number defining the second coordinate distance from one end of the vector to the other.

4,298,946

ELECTRONICALLY CONTROLLED PROGRAMMABLE DIGITAL THERMOSTAT

Glenn A. Hartsell, Dallas, and F. Thomas Bilek, Plano, both of Tex., assignors to Texas Instruments Incorporated, Dallas, Tex.

Filed Dec. 18, 1978, Ser. No. 970,019

Int. Cl.[3] G05D *23/32*

U.S. Cl. 364—557 26 Claims

1. An electronic digital thermostat system for controlling heating and cooling systems supplying an indoor area to maintain desired ambient temperatures during selected time periods in said area, said thermostat system comprising:

(a) temperature sensing means including at least one temperature sensor for sensing the ambient temperature of said area and for providing a digital signal indicative thereof;

(b) oscillator means for generating time pulses;

(c) digital processor means having a plurality of input and output terminals, said digital processor means being coupled to said oscillator means and said temperature sensing means for receiving said time pulses and for continually monitoring said ambient temperature, said digital processor means including a memory for storing digital coded information entered therein while said information is being processed, said digital processor means being responsive to real time and ambient temperature and to said digital coded information for controlling the heating and cooling systems in accordance with a permanently stored instruction sequence to maintain said desired ambient temperature;

(d) data entry means coupled to said digital processor means for entering said digital coded information into said digital processor means, said data entry means including:

(i) means for selecting certain ones of a plurality of operating modes of the thermostat system; and

(ii) keyboard means having a plurality of keys for entering digital coded time and temperature information into said digital processor means, said data entry means being selectively coupled between a plurality of said input and output terminals of said digital processor

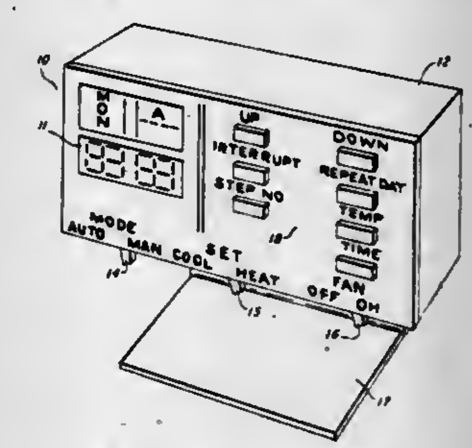

means, said digital processor means including means for selectively applying electrical signals to said keys via said output terminals and for receiving encoded electrical signals from said keys via said input terminals in response to said selectively applied electrical signals;

(e) digital display means for displaying desired parameters of time and temperature including information entered from said keyboard means, said display means being coupled to selected ones of said output terminals of said digital processor means;

(f) electrically controllable switch means coupled to at least one of said output terminals for selectively activating and deactivating said heating and cooling systems in accordance with signals from said digital processor means; and

(g) connector means for connecting said thermostat system to the heating and cooling systems and to a power supply.

4,298,947

INTRABOX TEMPERATURE DISPLAY DEVICE

Hiroshi Tamura, Yokohama, and Yutaka Nakaie, Kawasaki, both of Japan, assignors to Tokyo Shibaura Denki Kabushiki Kaisha, Kawasaki, Japan

Filed Nov. 15, 1979, Ser. No. 94,567

Claims priority, application Japan, Nov. 15, 1978, 53-140837

Int. Cl.[3] G01K *7/14*

U.S. Cl. 364—557 3 Claims

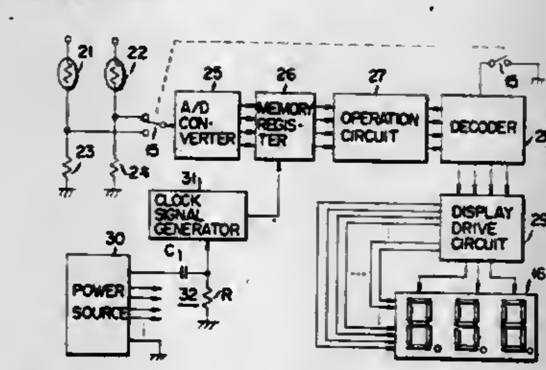

1. An intrabox temperature display device comprising:

a temperature sensor disposed within an intrabox for sensing a temperature of an air within the intrabox;

an A/D converter for converting a signal representing the intrabox temperature detected by said temperature sensor into a digital signal;

memory means comprised of n latch circuits and connected to receive clock signals from a clock signal generator in a given timing to sequentially latch n samples and store a succession of n samples each including n bits which are A/D converted by said A/D converter;

an operation circuit for averaging the detected data with a succession of samples read out of said memory means to produce averaged temperature digital data;

decoder means connected to said operation circuit to read out the temperature data stored at a memory location by an address signal of the averaged temperature digital data; and

display means for displaying the temperature data read out of said decoder means as a temperature approximate to a temperature of a food in the intrabox.

4,298,948

METHOD AND APPARATUS FOR GENERATING A DIGITAL REPRESENTATION OF THE INSTANTANEOUS ANGULAR POSITION OF A ROTATING BODY AND FOR GENERATING RECTANGULAR COORDINATE EQUIVALENTS THEREOF

Dean T. Davis, Columbus, Ohio, assignor to IRD Mechanalysis, Inc., Worthington, Ohio

Filed Nov. 30, 1979, Ser. No. 98,729

Int. Cl.[3] G06J *1/00*; G01M *1/22*

U.S. Cl. 364—603 14 Claims

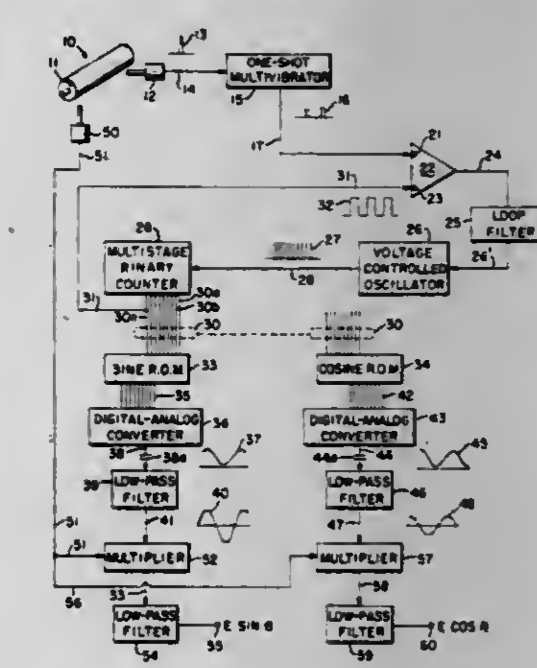

1. A method for generating a sinusoidal electrical reference signal corresponding to the instantaneous angular position of a rotating body which comprises:

generating one or more uniformly spaced electrical original pulses for each rotation of the said rotating body;

generating an electrical pulsed signal having 2^n uniformly spaced pulses between each of said original pulses;

counting the pulses of said uniformly spaced pulses in a binary code signal counter which uniquely represents 2^n angular positions of the said rotating body; then converting the said binary code signal in a sine function read only memory device to a digital representation of a sine function which corresponds to the instantaneous angular position of the said rotating body; and

then filtering the digital representation of the sine function to a corresponding analog representation of the same sine function which is synchronized with the instantaneous angular position of the said rotating body.

4,298,949

ELECTRONIC CALCULATOR SYSTEM HAVING HIGH ORDER MATH CAPABILITY

Sydney W. Poland, Arlington, Tex., assignor to Texas Instruments Incorporated, Dallas, Tex.

Filed Aug. 16, 1976, Ser. No. 714,464

Int. Cl.³ G06F *9/30, 15/02*

U.S. Cl. 364—706 **6 Claims**

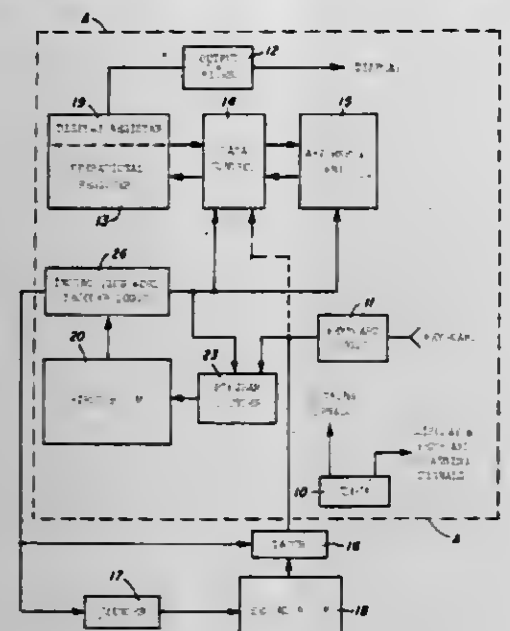

1. In an electronic microprocessor system, having input means for receiving data and for receiving input commands, output means for outputting data, a memory means for storing data received and data to be outputted, an arithmetic unit for performing arithmetic operations on data stored in said memory, and a first read-only-memory for storing groups of instruction words for controlling arithmetic operations performed by said arithmetic unit, the combination which comprises:

(a) a second read-only-memory for storing a plurality of sets of program codes, each program code being effective for addressing a preselected group of instruction words stored in said first read-only memory;

(b) addressing means, responsive to selected input commands, for addressing said second read-only-memory to read out preselected sets of program codes in response thereto, said addressing means including means, responsive to said selected input commands, for addressing said first read-only-memory to read-out selected instruction words for addressing said second read-only-memory, means responsive to a first selected instruction word for addressing a predetermined address in said second read-only-memory and means responsive to a second selected instruction word for incrementing the address addressed in said second read-only-memory; and

(c) means for addressing said first read-only-memory in response to the program codes read out of said second read-only-memory.

4,298,950

MULTIPOINT PIPELINE PROCESSOR FOR COMPUTING THE DISCRETE FOURIER TRANSFORM

Winthrop W. Smith, Jr., Maitland, Fla., assignor to Westinghouse Electric Corp., Pittsburgh, Pa.

Filed Oct. 12, 1979, Ser. No. 84,221

Int. Cl.³ G06F *15/332*

U.S. Cl. 364—726 **48 Claims**

1. A pipeline processor for performing a discrete Fourier transformation (DFT) on an input array of N signal values to derive an output array of at most N signal values representative of the frequency transformation of said input array, said processor comprising:

an input processing section including a first plurality of cascadedly coupled computational elements, each operative individually to perform only additions and subtractions substantially in a butterfly-type arrangement, said input processing section including means for operating on said input array of N signal values with said first plurality of computational elements in a pipeline computational fashion and for propagating the resulting interelement computed signal values therethrough in a first predetermined signal flow pattern to render a first intermediate array of signal values;

an intermediate processing section for multiplying each signal value of said first intermediate array with at least one respectively corresponding predetermined transfor-

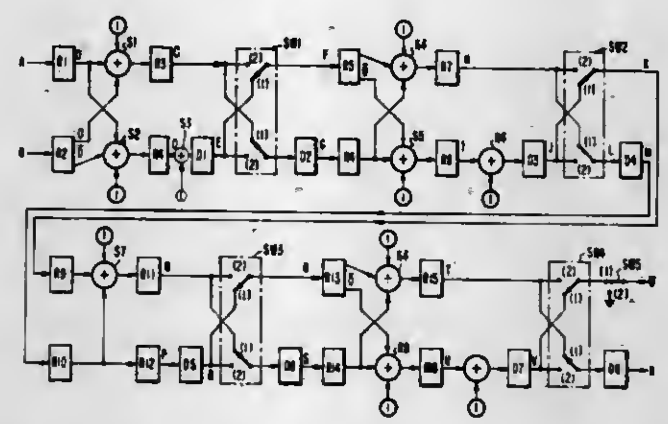

mation value to generate a second intermediate array of signal values;

an output processing section including a second plurality of cascadely coupled computational elements, each operative individually to perform only additions and subtractions substantially in a butterfly-type arrangement, said output processing section including means for operating on said second intermediate array of signal values with said second plurality of computational elements in a pipeline computational fashion and for propagating the resulting interelement computed signal values therethrough in a second predetermined signal flow pattern to render said output array of at most N signal values.

4,298,951

NTH ROOT PROCESSING APPARATUS

Stanley R. Hall, Westlake Village, Calif., assignor to Bunker Ramo Corporation, Oak Brook, Ill.

Filed Nov. 30, 1979, Ser. No. 99,201

Int. Cl.³ G06F *7/552*

U.S. Cl. 364—752 **7 Claims**

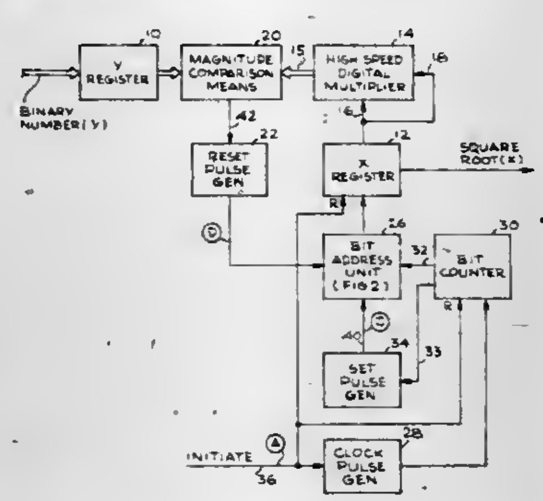

1. A processor for determining the square root of a predetermined multibit binary number (Y) comprising:

a first register comprised of multiple bit stages for storing said binary number (Y);

a second register comprised of multiple bit stages including

a most significant bit stage and stages of successively lesser significance including a least significant bit stage;

a high speed digital multiplier having multiplier input terminals, multiplicand input terminals and product output terminals and including means responsive to the application of signals representative of first and second binary numbers to said multiplier and multiplicand input terminals respectively for producing binary signals representative of the product of said first and second binary numbers on said product output terminals;

means connecting said second register to both the multiplier and multiplicand input terminals of said multiplier;

magnitude comparison means having first and second input terminals and an output terminal, and including means for developing a first output signal on said output terminal if a number applied to said first input terminal exceeds a number applied to said second input terminal and a second output signal on said output terminal if a number applied to said second input terminal exceeds a number applied to said first input terminal;

means respectively connecting said first register and said multiplier product output terminals to said comparison means first and second input terminal;

initializing means for initially writing a binary zero to each stage of said second register;

addressing means for addressing said stages of said second register sequentially from said most to said least significant bit stage to write a binary one in each stage;

a clock pulse generator;

a bit counter responsive to said clock pulse generator for generating indexing signals; and

means responsive to said indexing signals and said first output signal on said comparison means output terminal for incrementing said addressing means to address a succeeding stage and responsive to said second output signal on said magnitude comparison means output terminal for writing a binary zero into the addressed stage of said second register prior to addressing a succeeding stage.

4,298,952

ONE'S COMPLEMENT ADDER

Russell W. Guenthner, Glendale; Joseph C. Circello, and Anthony J. Galcik, both of Phoenix, all of Ariz., assignors to Honeywell Information Systems Inc., Phoenix, Ariz.

Filed Dec. 10, 1979, Ser. No. 102,300

Int. Cl.³ G06F *7/50*

U.S. Cl. 364—786 **5 Claims**

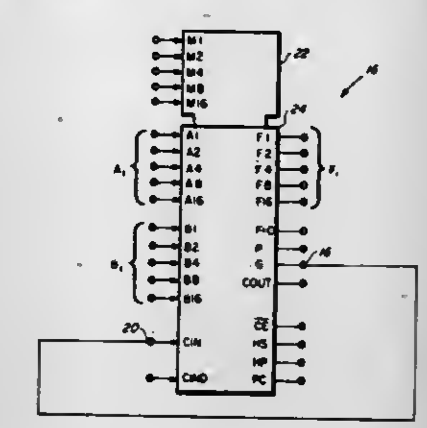

1. An adder for adding binary signals representing two binary numbers A_i, B_i in the one's complement notation each of the numbers having i bits, where i is an integer other than zero, comprising:

two sets of input terminals adapted to have applied to them binary signals representing A_i B_i;

a carry-in terminal adapted to have a binary signal representing a binary number to be summed with the two lowest order bits of A_i B_i;

i output resultant terminals, said adder including means for producing binary resultant signals F_i representing the sum of A_i, B_i, and the signal applied to the carry-in terminal at the i output resultant terminals;

a generate output signal terminal, said adder including means for producing a binary signal representing a binary carry generate number G, the value of which is independent of any signal applied to the carry-in terminal, and for applying the carry generate signal G to the generate output terminal; and

circuit means for applying the carry generate signal G to the carry-in terminal of the adder.

4,298,953

PROGRAMMABLE ZERO-BIAS FLOATING GATE TAPPING METHOD AND APPARATUS

Scott C. Munroe, Acton, Mass., assignor to Massachusetts Institute of Technology, Cambridge, Mass.

Filed Feb. 28, 1979, Ser. No. 16,334

Int. Cl.³ G06G *7/19;* **H03K** *5/195*

U.S. Cl. 364—825 **17 Claims**

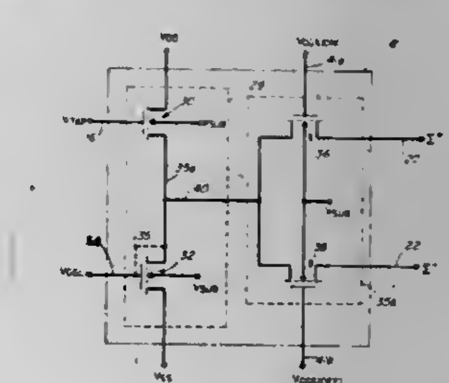

1. A method for selectively summing the time-varying components of a plurality of electrical potentials for obtaining a selectively weighted average of said time-varying signal components, each electrical potential able to be characterized by the sum of a bias component and a said time-varying signal component, said method comprising the steps of

selectively connecting using electrical control signals said electrical potentials to at most one of a first and a second summing bus through respective selected impedances,

for each bus, allowing the voltage level thereon to float at a voltage substantially equal to a weighted average of the bias components of the electrical potentials connected thereto, and

measuring the potential difference across said buses,

whereby said potential difference characterizes the selectively weighted average of said time-varying components.

8. An apparatus for selectively summing the time-varying signal components of each of a plurality of electrical potentials for obtaining a selectively weighted average of said time-varying signal components, each potential being characterized by the sum of a bias component and a said time-varying signal component, said apparatus comprising

first means for selectively connecting each said electrical potential through a respective impedance to at most one of a first and a second summing bus, the voltage level on each bus being allowed to float at a voltage substantially equal to a weighted average of the bias components of the electrical potentials connected thereto, and

second means for measuring a potential difference across said buses,

whereby said measured potential difference characterizes the selectively weighted average of said time-varying signal components.

4,298,954

ALTERNATING DATA BUFFERS WHEN ONE BUFFER IS EMPTY AND ANOTHER BUFFER IS VARIABLY FULL OF DATA

George A. Bigelow, Boulder; Ted A. Rehage, and Frankie S. Shook, both of Longmont, all of Colo., assignors to International Business Machines Corporation, Armonk, N.Y.

Filed Apr. 30, 1979, Ser. No. 34,234

Int. Cl.³ G06F *3/00*

U.S. Cl. 364—900 **21 Claims**

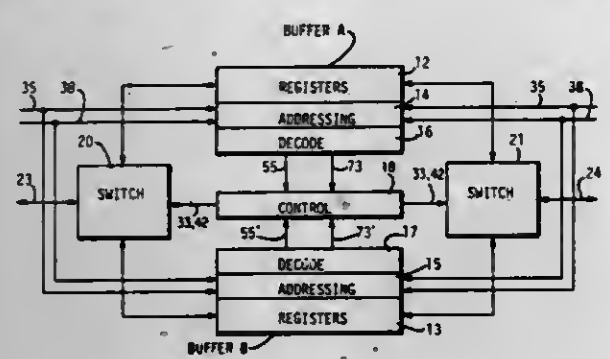

1. In a data path concentrator for connecting a high speed unit to a plurality of signal burst units for transferring signals in bursts of such signals therebetween, the improvement comprising:

a plurality of electrical signal burst accommodating means respectively for connecting said signal burst units to said high speed unit;

each said accommodating means comprising a plurality of switchable buffer means for receiving and temporarily storing signals being transferred and having control means responsive to a one of said buffer means therein which is receiving signals which partially fill such receiving means to a given intermediate filled state buffer to switch signals being received from said one of said buffer means to another of said buffer means in such accommodation means whenever said another buffer means is empty and

means responsive to the predetermined data activities of all of said units for selectively activating said accommodating means to buffer bursts of signals, whereby all said signal burst accommodating means may simultaneously receive signals for transfer between said high speed unit and respective ones of said signal burst means at maximal data transfer rates.

4,298,955

METHOD OF AND APPARATUS FOR THE DETECTION AND ANALYSIS OF HAZARDS

George Munday, London; David H. Slater, Berkshire; Leonard R. T. Tyley; Brian J. Berenblut, both of London, and Harry B. Whitehouse, Sevenoaks, all of England, assignors to The Insurance Technical Bureau, London, England

Filed Mar. 23, 1977, Ser. No. 780,307

Claims priority, application United Kingdom, Apr. 1, 1976, 13296/76; Aug. 25, 1976, 35329/76

Int. Cl.³ G06F *11/34, 15/46*

U.S. Cl. 364—900 **19 Claims**

1. A system for monitoring conditions of a plant in which chemical materials are operated upon, based upon a combination of signals representative of at least two sensed parameters within the operation, the parameters being selected from the group consisting of state variables, process variables and equipment variables, the plant comprising vessels, flow control means directing flow of materials between vessels, and material reservoirs, the monitoring system comprising:

(i) a plurality of transducers positioned within the plant to simultaneously detect the value of a plurality of operating parameters and to generate signals representative of said values;

(ii) a programmed processing device connected to receive a plurality of said signals, said processing device having:

(a) first means for producing selected combinations of said plurality of signals,

(b) second means for comparing each said combination of signals with a respective normal combination signal to produce a deviation signal if said compared signal deviates from said normal combination signal,

(c) the program comprising a decision table having columns each of which represents a combination of parameter values produced during operation of the process in

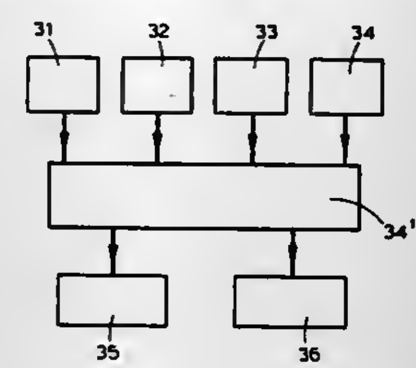

a selected order to assign a predetermined value to a deviation signal in accordance with the location of the corresponding value of the combination signal in the decision table; whereby monitoring of the conditions of a plant is obtained by the relationship between a signal representing a combination of sensed parameters and the corresponding signal in said decision table; and

(iii) receiving means comprising recording means to record the deviation signals of combinations of selected ones of said plurality of signals.

4,298,956

DIGITAL READ RECOVERY WITH VARIABLE FREQUENCY COMPENSATION USING READ ONLY MEMORIES

Donald J. Rathbun, Andover, and David B. O'Keefe, Westford, both of Mass., assignors to Honeywell Information Systems Inc., Waltham, Mass.

Filed May 14, 1979, Ser. No. 38,977

Int. Cl.³ G06F *7/22;* G11B *5/09*

U.S. Cl. 364—900 **7 Claims**

1. A data memory system including apparatus for compensating for the varying frequency of clock signals and data signals in an information stream received from a device in a plurality of modes and for converting into decoded data signals comprising:

receiving means for storing each of said clock signals and said data signals at a predetermined logic level and generating a sequence of output data signals;

first shifting means coupled to said receiving means and responsive to each of said sequence of output data signals for generating a plurality of shift timing signals;

counting means coupled to said first shifting means and responsive to a first of said plurality of shift timing signals generated by a first of said sequence of output data signals for generating a sequence of interval timing signals;

register means coupled to said first shifting means and said counting means and responsive to a second of said plurality of shifting timing signals generated by a second of said sequence of output data signals and said sequence of interval timing signals for generating a plurality of latch signals indicative of the interval of time between said first and said second of said sequence of output data signals; and

read only memory means coupled to said register means and responsive to said latch signals for generating initialization signals representative of a variance of time between said first and said second of said sequence of output data signals and for generating a plurality of predetermined numbers indicative of an expected time between said first and said second of said sequence of output data signals;

said counting means being further coupled to said read only memory means and responsive to a third shift timing signal and said initialization signals for presetting said counting

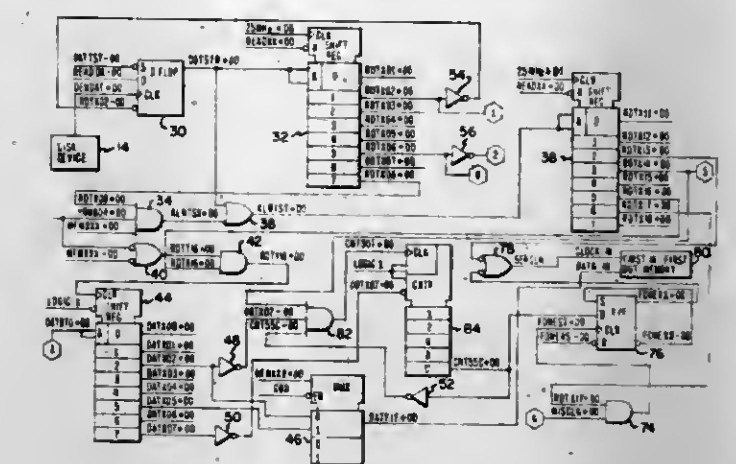

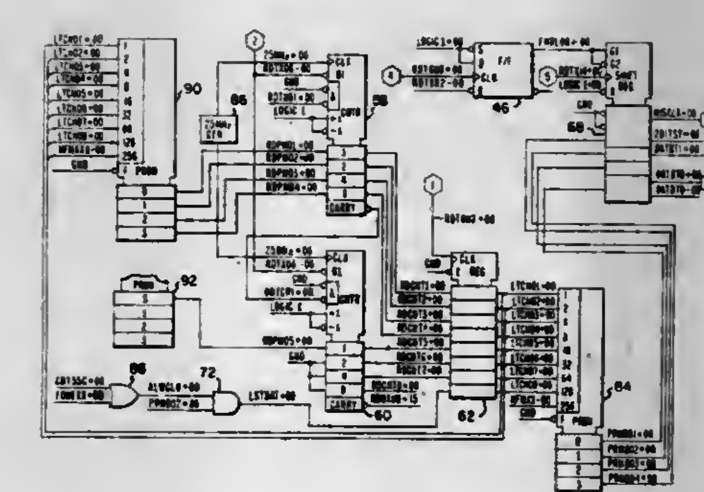

means for compensating for the difference between an expected time and an actual time between said each of said sequence of output data signals.

4,298,957

DATA PROCESSING SYSTEM WITH CHARACTER SORT APPARATUS

William S. Duvall, Portola Valley, Calif., and William K. English, Tokyo, Japan, assignors to Xerox Corporation, Stamford, Conn.

Filed Jun. 28, 1979, Ser. No. 52,993

Int. Cl.³ G06F *3/153, 3/12*

U.S. Cl. 364—900 **14 Claims**

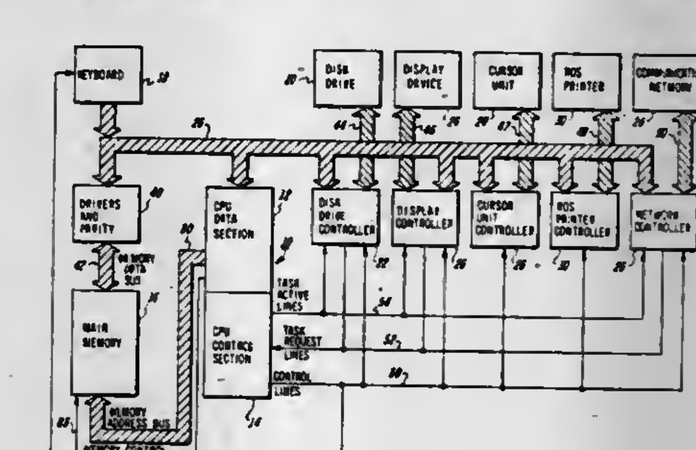

1. A data processing system comprising:

first storage means for storing character font data representative of a plurality of characters, each character being represented by said font data as a bit map of predetermined dimensions, said plurality of characters being stored in an ordered storage sequence;

image presentation means for visually presenting an image comprised of preselected ones of said characters on a predetermined background area;

second storage means for storing a bit map representation of said image;

visual control means for controlling said image presentation means to visually present said image in accordance with the character font data stored in said bit map representation of said image in said second storage means;

third storage means for storing a list of identification data for at least some of said preselected characters to be visually presented, said identification data identifying the type and style of each character as well as its desired location on said background area; and

data control means for controlling the processing and handling of character font data, said data control means comprising sorting means for sorting the identification data in said third storage means into said ordered storage sequence, accessing means responsive to said sorted identification data for accessing from said first storage means in said ordered storage sequence the character font data for each character identified in said list, and loading means for loading the character font data for each accessed character into said bit map representation in said second storage means at a location defined by the identification data for that character.

4,298,958

SEQUENCE CONTROL SYSTEM

Masaoki Takaki; Hirokazu Sawano; Kunio Yamanaka; Kazuyoshi Asada, all of Hitachi; Keiji Hideshima, Fujisawa, and Haruo Koyanagi, Ome, all of Japan, assignors to Hitachi, Ltd., Tokyo and Nissan Motor Co., Ltd., Yokohama, both of, Japan

Filed Sep. 7, 1979, Ser. No. 73,370

Claims priority, application Japan, Sep. 13, 1978, 53-111662; Sep. 13, 1978, 53-111663

Int. Cl.³ G05B *11/00;* G06F *9/06, 11/00*

U.S. Cl. 364—900 **3 Claims**

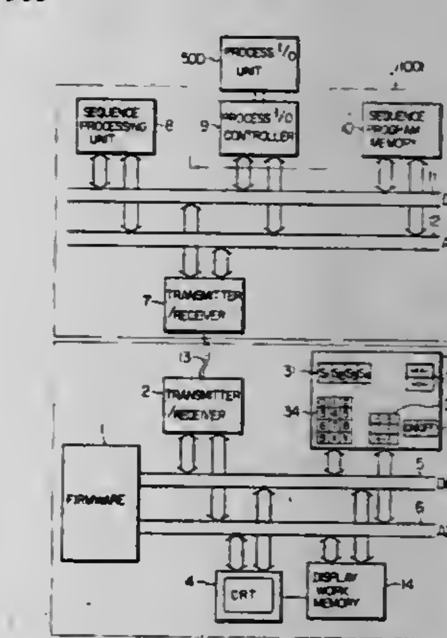

1. A sequence controller for effecting sequence control of a process to be controlled by sequentially accessing and reading a selected one of a plurality of sequence programs, said sequence controller comprising:

a sequence program memory for storing a plurality of sequence programs;

a process I/O unit including a scanner and switching means, said scanner including means for sequentially inputting signals indicative of conditions of the process to be controlled through said switching means and for sequentially

applying control signals to the process to be controlled through said switching means;

a buffer memory including an input memory portion for storing the signals indicative of the conditions of the process which are sequentially inputted from the process to be controlled through said process I/O unit, and an output memory portion for storing the control signals for the process which are sequentially obtained in accordance with a sequence program read out of said sequence program memory;

means for selectively connecting said buffer memory to said switching means in said process I/O unit for transmitting the signals indicative of the conditions of the process and the control signals for the process therebetween;

a sequence processing unit connected to said sequence program memory and said buffer memory for processing a sequence program selectively read out of said sequence program memory on the basis of data stored in said input memory portion of said buffer memory and applying results of the processing operation to said output memory portion as the control signals for the process;

setting means for manually selecting a sequence program in accordance with a sequence logic of the process to be controlled and for manually setting conditions of the process to be controlled, said setting means including means for outputting a first signal indicative of a selected sequence program and a second signal indicative of set conditions of the process;

control means connected to said setting means and coupled to said sequence program memory for selectively reading a corresponding sequence program from said sequence program memory in accordance with said first signal and for applying the selected sequence program to said sequence processing unit, and having means for setting the conditions of the process in said input memory portion in accordance with said second signal; and

display means for selectively displaying conditions of a sequence program stored in said input and output memory portions of said buffer memory; whereby, when the conditions of the process are sequentially applied to said input memory portion and the control signals for the process are applied from said output memory portion to the process through said process I/O unit and said connecting means in response to said control means, said display means displays operating conditions of a sequence program selected by said setting means in accordance with the conditions of the process set in said input memory portion through said process I/O unit, and when said connecting means disconnects said process I/O unit from said buffer memory, said display means displays operating conditions of a sequence program selected by said setting means in accordance with the signals indicative of conditions of the process which are set by said setting means and stored in said input memory portion.

4,298,959

DIGITAL INFORMATION TRANSFER SYSTEM (DITS) RECEIVER

Frank D. Sundermeyer, Middletown, Conn., and Richard W. Calcasola, Longmeadow, Mass., assignors to United Technologies Corporation, Hartford, Conn.

Filed Nov. 23, 1979, Ser. No. 96,969

Int. Cl.³ G06F *3/04*

U.S. Cl. 364—900 **9 Claims**

1. A digital information transfer system (DITS) receiver for storing in a direct memory access (DMA) for a signal processor, a desired number of data signals presented asynchronously at selected signal speeds to one or more DITS input channels as serial bit data words having an information field with a first byte data identification (ID) and one or more succeeding bytes of data intelligence, comprising:

data sampling means for sampling each input channel at least once within each succeeding signal speed period to provide a serial sample bit stream of sampled signal bits from each channel;

register means having a plurality of addressable locations therein for registering signal bits;

data memory means, having a plurality of identifiable signal storage locations therein, at least one associated with each of the desired number of data signals, each location providing storage therein of the signal bits of the associated data word; and

controller means, responsive to said serial sample bit stream,

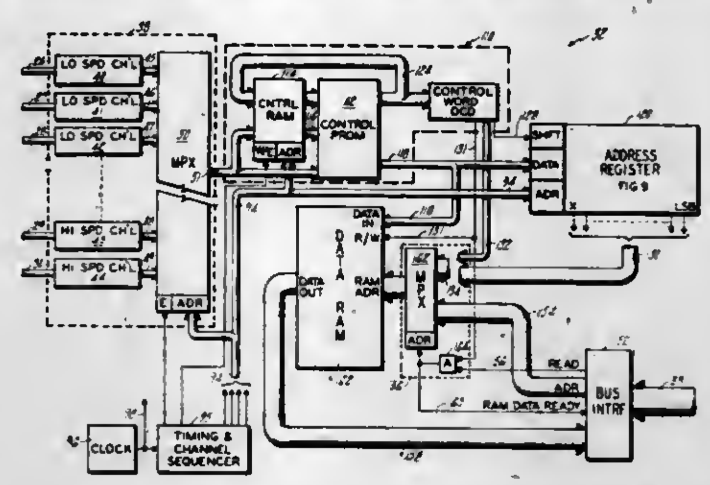

for presenting the first byte ID signal bits of each data word to said register means for accumulation therein of the full first byte ID of each data word at the one of said addressable locations associated with the data word, and for presenting simultaneously, in response to each accumulated first byte ID, each sampled data intelligence signal bit of said data word together with said accumulated first byte ID signal associated therewith to said data memory means for storage therein at the one of said signal storage locations identified by said accumulated first byte ID signal.

4,298,960

MEMORY INTEGRATED CIRCUIT

Kenjiro Mitake, and Osamu Kurakami, both of Tokyo, Japan, assignors to Nippon Electric Co., Ltd., Tokyo, Japan

Filed Sep. 28, 1979, Ser. No. 79,727

Claims priority, application Japan, Sep. 29, 1978, 53/120880

Int. Cl.³ G11C *11/40*

U.S. Cl. 365—210 **19 Claims**

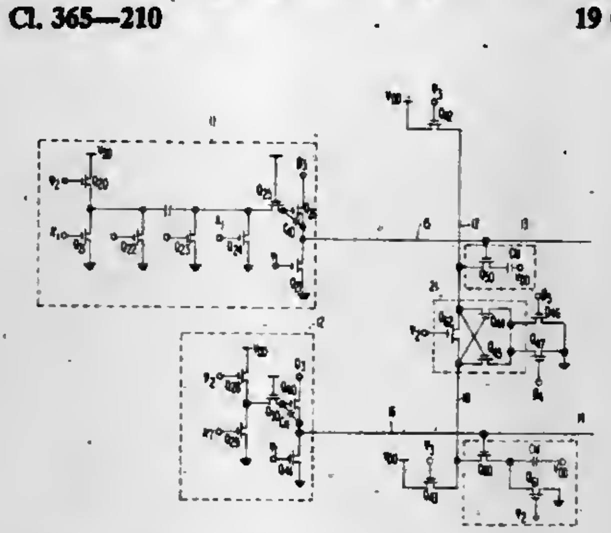

1. A memory circuit comprising:

a first digit line;

a second word line;

decoder means for operatively driving said first and second word lines, said decoder means being comprised of transistors having a first threshold voltage;

a memory cell including a first gate transistor having a gate coupled to said first word line and a drain coupled to said first digit line, and first capacitor means coupled between a source of said gate transistor and a potential source; and

a dummy cell including a second gate transistor having a gate coupled to said second word line and a drain coupled to said second digit line and a second capacitor means coupled between a source of said second gate transistor and said potential source;

wherein said first and second gate transistors are of the same channel type as that of said decoder transistors and have a second threshold voltage of the same polarity as that of said first threshold voltage, said second threshold voltage being smaller in absolute value than said first threshold voltage.

4,298,961

BIPOLAR MEMORY CIRCUIT

Atsuo Hotta, Higashiyamato, and Yukio Kato, Kodaira, both of Japan, assignors to Hitachi, Ltd., Tokyo, Japan

Filed Apr. 16, 1980, Ser. No. 140,839

Claims priority, application Japan, Apr. 25, 1979, 54-50294

Int. Cl.³ G11C *11/40*

U.S. Cl. 365—179 **3 Claims**

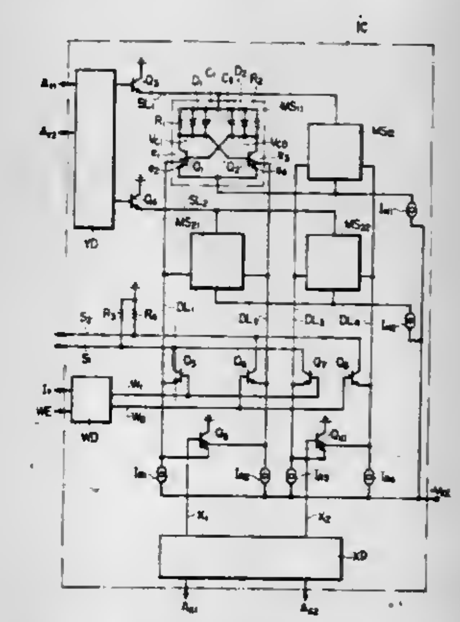

1. A memory circuit comprising: a matrix of memory cells arranged in rows and columns, each cell having a pair of multi-emitter transistors each of which having two emitters, collector and a base, the bases and collectors of said pair of multi-emitter transistors being cross-coupled to each other, one emitters of said pair of transistors being commonly connected to a stationary current source for providing a stationary current, whereas the other emitters of said pair of transistors being respectively connected to a pair of column lines, said collectors of said pair of transistors being connected to a row line through parallel circuits of a load resistance and a diode means, respectively; a pair of writing transistors being connected at their emitters to said pair of column lines respectively; and writing current source means connected to said pair of column lines for delivering a writing current; wherein, in the stationary state out of selection, the difference of collector voltages between said pair of multi-emitter transistors caused by the stationary current is set at a level higher than 0.6 V.

4,298,962

MEMORY

Kuniyuki Hamano, and Toshiyuki Ohta, both of Tokyo, Japan, assignors to Nippon Electric Co., Ltd., Tokyo, Japan

Filed Jan. 25, 1980, Ser. No. 115,323

Claims priority, application Japan, Jan. 25, 1979, 54-7988; Feb. 28, 1979, 54-22695

Int. Cl.³ G11C *11/40*

U.S. Cl. 365—182 **8 Claims**

8. A memory comprising a semiconductor substrate of one conductivity type, first and second regions of the opposite conductivity type provided in said semiconductor substrate, a channel region located between said first and second regions, a control electrode provided on said channel region via an insulating film, and means for extending depletion layers from said first and second regions so as to isolate said channel region from said semiconductor substrate, and means for selectively

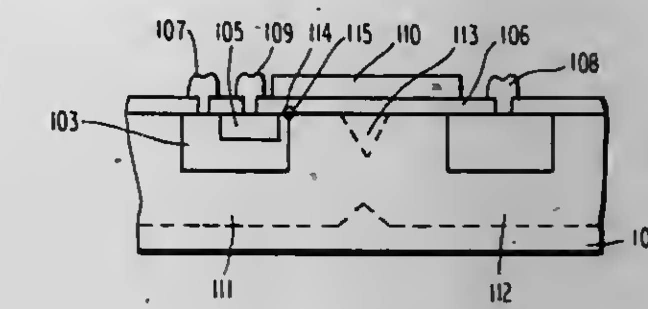

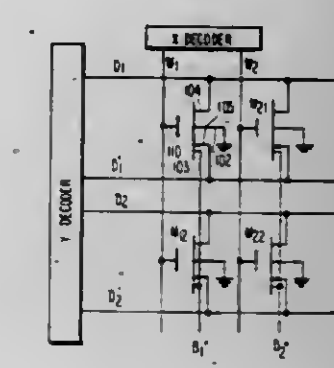

accumulating majority carriers of said semiconductor substrate in said channel region, the existence or non-existence of accumulation of said majority carriers in said channel region being made to correspond to the stored information.

4,298,963

JETTISONING AND FLOTATION DEVICE FOR A SUSPENDED LOAD, PARTICULARLY AN UNDERWATER LISTENING BODY

Roger M. Dejob, Verrieres-le-Buisson, and Marcel P. Tardivon, Fontenay aux Roses, both of France, assignors to Etat Francais represente par le Delegue Ministeriel pour l'Armement, Paris-Armees, France

Filed Nov. 28, 1975, Ser. No. 635,680

Claims priority, application France, Nov. 28, 1974, 74 38948; Sep. 11, 1975, 75 27818

Int. Cl.³ H04B *1/59*

U.S. Cl. 367—4 **14 Claims**

1. Apparatus for use in the jettisoning and flotation of a suspended load, particularly an underwater listening device, comprising a parachute for suspending the load during descent between jettisoning and flotation, and at least one inflatable float for maintaining the load at a predetermined depth in a body of water, said float comprising an inflatable ballonet fixed in the central portion of said parachute, an inflation sleeve coupled at one end to said ballonet and open for influx of air at its free other end for inflating said ballonet with superatmospheric air pressure generated by the descent of said parachute, and a tension member fixed at one end to said free end of said sleeve and adapted for coupling of its other end to the load so as to extend said sleeve downwardly during descent with its free end facing downwardly, wherein said parachute is cruciform and said ballonet comprises two generally square pieces of fabric which are secured edge-to-edge such that the ballonet viewed in plan is of generally square shape, one of the pieces of fabric which forms said float being coupled with said inflation sleeve and constituting the central portion of the parachute and the lower surface of said ballonet, the branches of which parachute are formed by rectangles of sheet-like material which are

secured to the lower piece of said ballonet at one of their smaller sides, and suspension lines extending from said para-

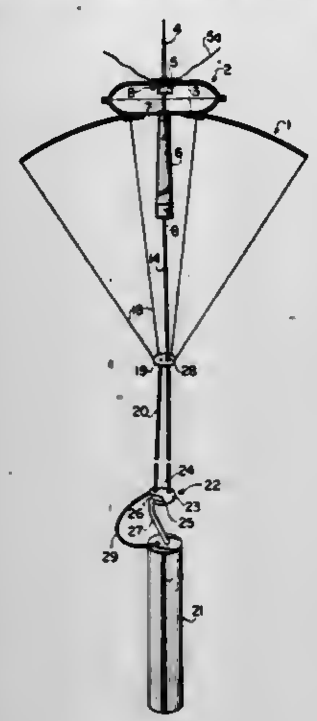

chute and connected to a connecting member adapted for connection to the load.

4,298,964

TOWED DEPLOYMENT OF ACOUSTIC ARRAYS

Paul L. Warnshuis, Jr., Rancho Santa Fe, and Peter V. Serrell, Solana Beach, both of Calif., assignors to The United States of America as represented by the Secretary of the Navy, Washington, D.C.

Filed Apr. 21, 1980, Ser. No. 142,322

Int. Cl.³ H04R ***1/44***

U.S. Cl. 367—4 **20 Claims**

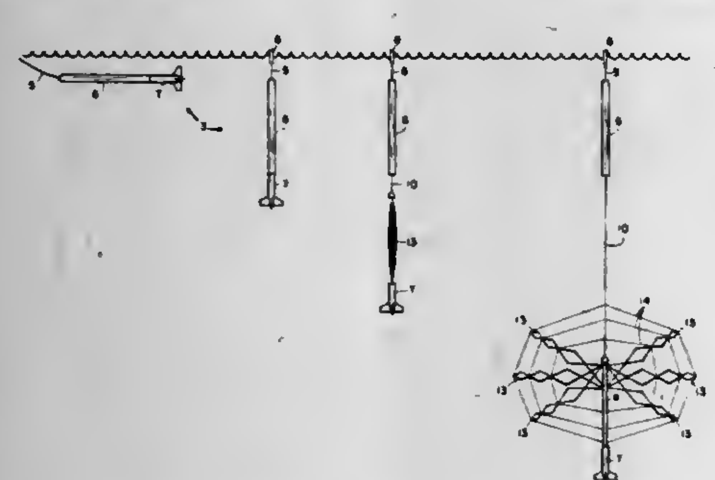

1. An instrumentation array support structure for use in a water medium, comprising:

a container means having a rounded nose and a bottom;

a separable tail portion fitted to said container means to close the bottom thereof;

an elongated support means joined to the top of said tail portion, said support means being slidable within said container means;

first reel and cable means connecting said support means with said container, whereby said support means can be moved into and out of said container on said cable means;

a plurality of scissor arms mounted on said support means by linkage means; and

driving means contained within said tail portion and connected to said linkage means for extending and retracting said scissor arms.

4,298,965

DIRECTIVITY DISPLAY DEVICE AND METHOD

Hiroshi Kogo, Ichikawa; Mamoru Tonooka, Ryugasaki; Teruhisa Aoki, Tokyo; Shigeo Ando, Minami-ashigara, and Raiji Tomiyama, Yokohama, all of Japan, assignors to Nissan Motor Company, Limited, Kanagawa, Japan

Filed Oct. 25, 1979, Ser. No. 88,127

Claims priority, application Japan, Nov. 1, 1978, 53-133743; Apr. 11, 1979, 54-46912[U]

Int. Cl.³ H04R ***29/00***

U.S. Cl. 367—13 **18 Claims**

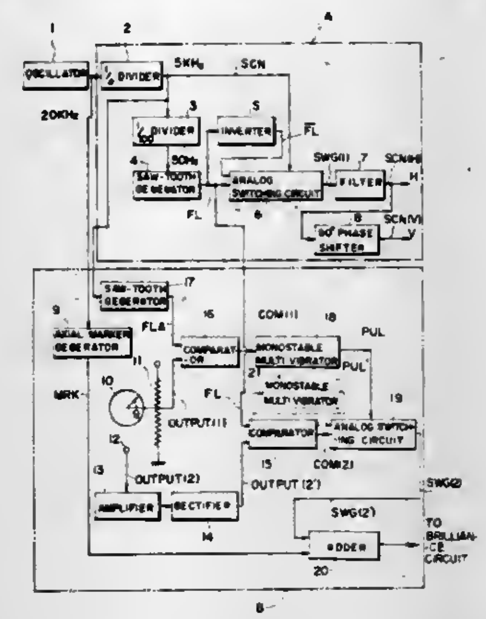

1. A device for displaying in graphic form a property of an object as a function of an attribute of that object, comprising a scanning circuit including a first saw-tooth generator producing a scan signal and means for measuring a directional property of the object and converting a measurement signal into a brilliance modulation signal, including:

(a) a first detector for generating a first signal proportional to the attribute of the object,

(b) a second detector for generating a second signal indicating the current value of the property of the object,

(c) a second saw-tooth generator for generating a saw-tooth wave signal,

(d) a first comparator which compares the output of said first detector with said saw-tooth wave signal generated by the second saw-tooth generator to produce an output when said saw-tooth wave signal of said second saw-tooth generator is above the signal generated by said first detector,

(e) a second comparator which produces a signal dependent on the output of said first saw-tooth generator and the output of said second detector,

(f) a first pulse generator responsive to the output of said first comparator to produce pulses, and

(g) a switching circuit for switching the output of said second comparator gated by the pulses output from said first pulse generator to produce an output serving as a brilliance modulated signal.

4,298,966

REMOVAL OF SURFACE LAYER ANOMALY EFFECTS

William H. Ruehle, Duncanville, Tex., assignor to Mobil Oil Corporation, New York, N.Y.

Filed Jan. 22, 1979, Ser. No. 5,652

Int. Cl.³ G01V ***1/32***

U.S. Cl. 367—50 **8 Claims**

1. In seismic exploration wherein seismic energy reflected from subsurface layers is detected to produce seismograms, the method of removing from the travel time of said seismograms the distortion caused by travel through a layer anomaly comprising:

converting said travel time of said seismograms to a depth section of said layers including said anomaly;

generating from said seismograms a depth section of said layers without said anomaly;

converting the depth sections to reflection times for each subsurface layer with said anomaly and without said anomaly;

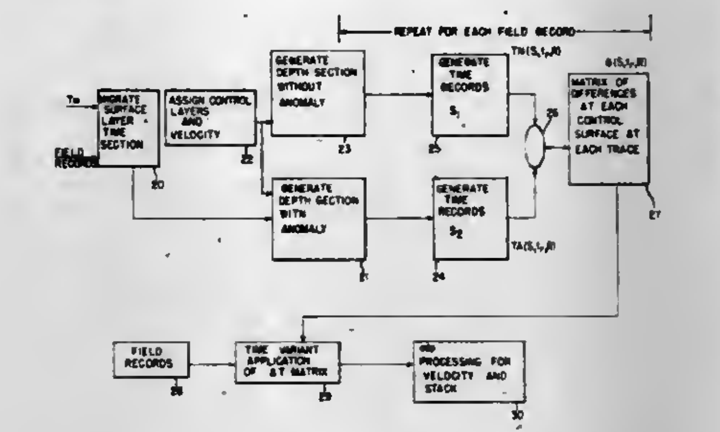

generating time corrections from said reflection times for each trace of said seismograms for each subsurface; and time correcting said traces with said time corrections at the time of reflection from each of said subsurface layers.

4,298,967

HIGH RESOLUTION DOWNHOLE-CROSSHOLE SEISMIC REFLECTION PROFILING TO RESOLVE DETAILED COAL SEAM STRUCTURE

Laric V. Hawkins, Cammeray, Australia, assignor to Unisearch Limited, Keusington, Australia

Filed Jun. 13, 1979, Ser. No. 48,541

Int. Cl.³ G01V ***1/20, 1/40***

U.S. Cl. 367—57 **6 Claims**

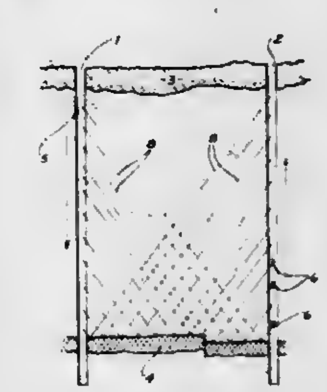

1. A method of seismic exploration and/or detecting seismic reflectors, including the steps of providing at least two adjacent drillholes extending below a surface weathered layer so that a seismic reflector extends between the drillholes; arranging a seismic source in one of the drillholes and a seismic receiver in at least the other drillhole and actuating the same so that seismic signals generated by the seismic source are reflected from the seismic reflector extending between the drillholes and then received by the seismic receiver; moving said seismic source and said seismic receiver relative to one another substantially vertically in mutually opposite directions, so that when one of said seismic source and seismic receiver is lowered, the other of said seismic source and seismic receiver is raised; and recording said seismic source and seismic receiver signals in conjunction with the relative movement between said seismic source and said seismic receiver.

4,298,968

DIGITAL REFLECTION SEARCHING AND SECTION PLOTTING

William H. Ruehle, Duncanville, and John D. Hodge, Dallas, both of Tex., assignors to Mobil Oil Corporation, New York, N.Y.

Continuation of Ser. No. 863,766, Oct. 2, 1969, abandoned, which is a continuation of Ser. No. 696,661, Jan. 9, 1968, abandoned, which is a continuation of Ser. No. 607,123, Dec. 13, 1966, abandoned, which is a continuation-in-part of Ser. No. 516,609, Dec. 27, 1965, abandoned. This application Mar. 15, 1977, Ser. No. 777,806

Int. Cl.³ G01V ***1/30***

U.S. Cl. 367—59 **18 Claims**

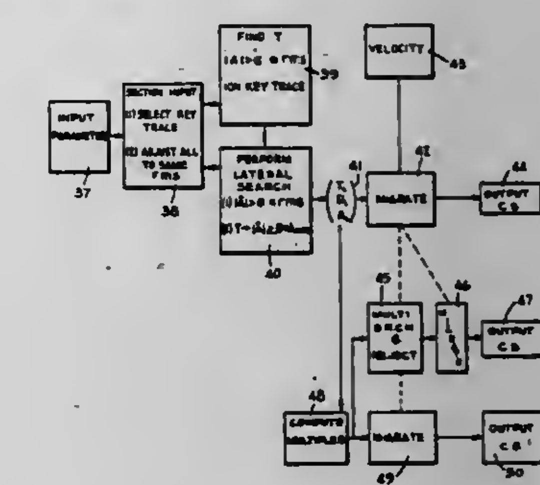

9. The new use of an automatic digital computer and automatic plotting means to produce a migrated seismic section from seismic data including a plurality of traces represented by digital values at periodic sampling times on each trace and representing the occurrence times of seismic energy from a plurality of spaced sources and reflected from subsurface interfaces comprising:

adjusting the amplitude of each trace in said digital computer so that the rms level of each trace is equal for all traces,

converting said seismic data in said digital computer to a first physical representation of the occurrence time of energy reflected from a particular subsurface interface and a second physical representation of the attitude of said particular subsurface interface,

migrating in said digital computer said first physical representation of occurrence time and said second physical representation of attitude to values representating actual depth and horizontal displacement with respect to said sources, and

plotting said particular subsurface interface at the attitude and actual depth and horizontal displacement of said particular subsurface interface.

4,298,969

METHOD AND APPARATUS FOR TESTING THE IMPEDANCES OF GEOPHONE CHANNELS

James E. Rickenbacker, Houston, Tex., assignor to Exxon Production Research Company, Houston, Tex.

Filed Sep. 26, 1979, Ser. No. 78,868

Int. Cl.³ G01V ***1/16, 1/00;*** **G01C** ***27/00***

U.S. Cl. 367—76 **6 Claims**

1. An apparatus for testing the impedances of a plurality of geophone channels of a seismic data gathering device, said apparatus comprising:

a plurality of current sources which feed test currents into the geophone channels to develop a test voltage across each channel that is proportional to that channel's impedance;

a comparator for each geophone channel, said comparator being connected to each channel to compare the test voltage for that channel with a high reference voltage that is propor-

tional to the maximum acceptable impedance for that channel and with a low reference voltage that is proportional to the minimum acceptable impedance for that channel; and

a simulator for developing the high and low reference voltages for each channel, said simulator being connected to each channel and comprising

a first voltage source providing a first voltage which is proportional to the lowest nominal impedance of the geophone channels;

a second voltage source providing a second voltage which is proportional to the highest nominal impedance of the geophone channels;

a first operational amplifier having a first gain setting and a second gain setting and receiving said first voltage at one of its input terminals;

a second operational amplifier having a first gain setting and

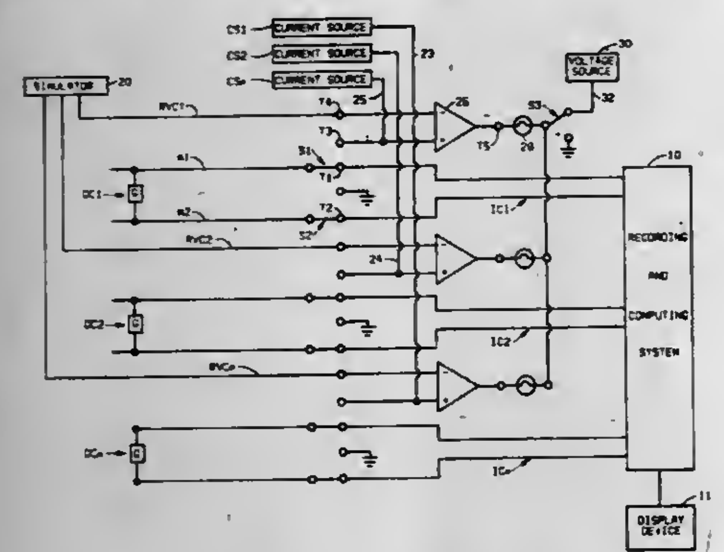

a second gain setting and receiving said second voltage at one of its input terminals, said first and second gain settings being substantially equal to those of the first operational amplifier;

a voltage divider coupled to the output terminals of the operational amplifiers, said voltage divider providing a series of high reference voltages proportional to the maximum acceptable impedances of the geophone channels when said amplifiers are on their first gain settings and said voltage divider providing a series of low reference voltages proportional to the minimum acceptable impedances of the geophone channels when said amplifiers are on their second settings; and

means connected to said amplifier for controlling the gain settings of the amplifiers,

whereby a measurement is made for each channel whether the impedance of that channel falls within acceptable limits.

4,298,970

BOREHOLE ACOUSTIC TELEMETRY SYSTEM SYNCHRONOUS DETECTOR

E. Neil Shawhan, West Chester, Pa.; Octavio A. Vela, and Miles A. Smither, both of Houston, Tex., assignors to Sperry-Sun, Inc., Sugar Land, Tex.

Filed Aug. 10, 1979, Ser. No. 65,475

Int. Cl.³ G01V *1/40;* H04B *1/16*

U.S. Cl. 367—82 **19 Claims**

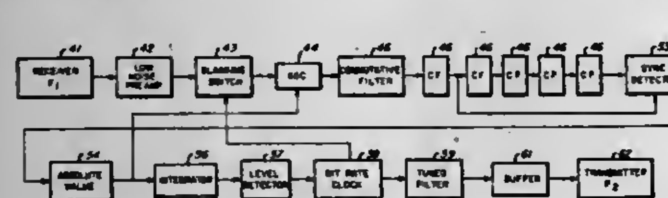

1. In a borehole telemetry system for passing acoustic signals in the form of a data stream over an elongated column acting as an acoustic path in the borehole, such acoustic signals having a data component embedded in a high level of noise, circuit means for filtering noise from the signal to provide a useable data component, which means comprises:

first commutative filter means for filtering noise components of the data stream which occur at frequencies outside a narrow frequency band;

second commutative filter means for sequentially measuring the amplitude of a discrete portion of the data stream after the frequency filtering, said first commutative filter means further providing means for phase shifting noise components of the data stream before passage of the data stream into the second commutative filter means;

means for operating the sequential measuring means in timed relation to the occurrence in the data stream of a switching signal occurring at a selected frequency; and

means for outputting the average value of discrete portions of the data stream.

4,298,971

ELECTRONIC TIMPIECE

Shigeru Morokawa, Higashiyamato, and Keiichiro Koga, Tokorozawa, both of Japan, assignors to Citizen Watch Company Limited, Tokyo, Japan

Filed Jan. 5, 1979, Ser. No. 1,260

Claims priority, application Japan, Jan. 11, 1978, 53/1751

Int. Cl.³ G04B *17/20, 1/00*

U.S. Cl. 368—204 **9 Claims**

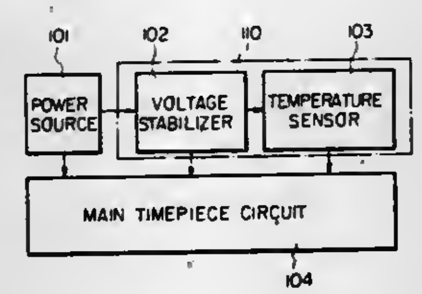

1. In an electronic timepiece powered by a battery and having an integrated circuit chip including a standard frequency signal source for providing a signal of relatively high frequency, frequency divider means responsive to said relatively high frequency signal for producing a relatively low frequency signal, drive signal generator means responsive to said relatively low frequency signal for producing drive signals, and display means responsive to said drive signals for providing a time information, the improvement comprising:

a voltage stabilizer circuit formed on said integrated circuit chip for producing a stabilized voltage, said voltage stabilizer circuit including at least one combination of a non-linear element and a current mirror circuit, in which said at least one combination of said non-linear element and said current mirror circuit provides a basic voltage to cause said stabilized voltage to be produced by said voltage stabilizer circuit; and

a temperature sensor formed on said integrated circuit chip and driven by said stabilized voltage.

4,298,972

ALARM SIGNALING TIME DETECTING DEVICE FOR LEAF TYPE DIGITAL CLOCK

Masuo Ogihara; Kozo Chimura; Nobuo Shinozaki, and Yoichi Seki, all of Yotsukaido, Japan, assignors to Seiko Koki Kabushiki Kaisha, Tokyo, Japan

Filed Dec. 27, 1979, Ser. No. 107,553

Claims priority, application Japan, Dec. 28, 1978, 53-163742

Int. Cl.³ G04B *19/02;* G04C *21/16*

U.S. Cl. 368—222 **3 Claims**

1. In an alarm time detecting device for a leaf type digital clock which includes an hour time wheel; minute leaves successively positioned for viewing to show the passage of minutes, wherein certain ones of said minute leaves have a respective projection extending therefrom and the remaining ones of said minute leaves lack a projection corresponding to said respective projections of said certain minute leaves; a first detecting member angularly positionable relative to said hour time wheel for engaging said hour time wheel at an alarm time corresponding to the angular position of said first detecting member and for producing a mechanical signal when said hour time wheel is engaged; a first detecting lever positionable by said first detecting member; a second detecting lever positionable by said first detecting lever and positionable to be unaffected by setting of the alarm time and cooperative with said minute leaves for producing a second mechanism signal; and an

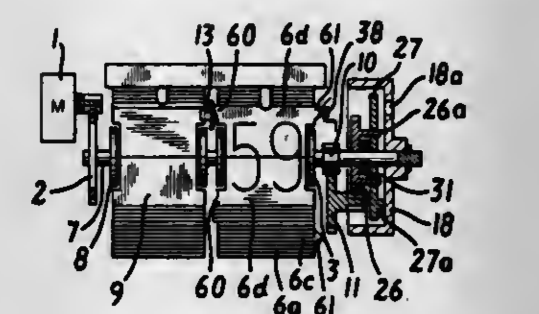

alarm device actuated when both the first and the second mechanical signals occur; the improvement comprising: said second detecting lever dimensioned to be positioned by said first detecting lever so as to be clear of said minute leaf projections before said first detecting member produces the first mechanical signal and for moving to be engaged by said minute leaf projections after said first detecting member has engaged said hour time wheel and produced the first mechanical signal; and said second detecting lever being released by said minute leaf projections as said minute leaves are successively positioned for viewing to release said second detecting lever for further movement which constitutes said second mechanical signal.

4,298,973

STRUCTURE FOR COUPLING BACK COVER WITH CASE BAND IN WRIST WATCH

Motoyuki Saito, Tanashi, Japan, assignor to Citizen Watch Co., Ltd., Tokyo, Japan

Filed Dec. 22, 1980, Ser. No. 218,703

Claims priority, application Japan, Dec. 26, 1979, 54-184679[U]

Int. Cl.³ G04B *37/00*

U.S. Cl. 368—276 **5 Claims**

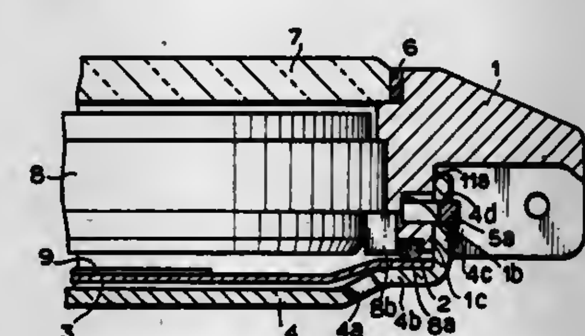

1. A structure for coupling a back cover with a case band in a wrist watch comprising a case band having a long groove on the outer wall of a band attaching portion, a spring member being fitted in said long groove of the case band so as to outwardly project a protruded portion of said spring member and a part thereof being fixed to said case band, a back cover having a side wall with a long hole bored at the position corresponding to that of said spring member, and an elastic member for energizing and engaging said back cover with said case band along the axial direction thereof so as to cover a module.

4,298,974

OPTICAL HEAD FOR A VIDEODISC PLAYER/RECORDER

Yoshito Tsunoda, Mitaka; Kimio Tatsuno, Kokubunji; Toshimitsu Miyauchi, Hachioji; Kunio Aiki, Hachioji, and Ryoichi Ito, Hachioji, all of Japan, assignors to Hitachi, Ltd., Tokyo, Japan

Filed May 10, 1979, Ser. No. 37,898

Claims priority, application Japan, May 10, 1978, 53-54502

Int. Cl.³ G11B *7/14*

U.S. Cl. 369—45 **8 Claims**

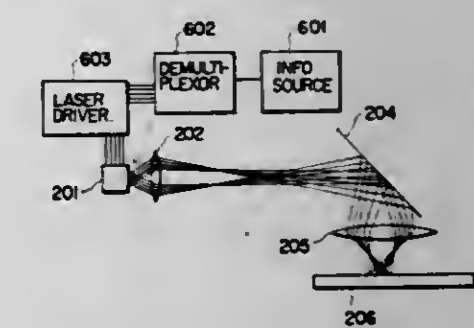

1. An optical head for an information recording system including a laser source and optical means for guiding a laser beam from the laser source to a predetermined information recording medium,

said optical head being characterized in that a semiconductor laser array of a plurality of lasing points formed on a common base plate is employed as said laser source, said optical means being arranged in common to receive the laser beams from the lasing points of said semiconductor laser array and to project said beams onto predetermined points of said information recording medium, first drive means for pulse modulating at least two of said plurality of lasing points in said semiconductor laser array including a source of multiplexed signals, a demultiplexer connected to said source and a driver circuit connecting the outputs from said demultiplexer to respective lasing points, and second driver means for continuously oscillating at least one of the remaining lasing points in said semiconductor laser array.

4,298,975

OPTICAL RECORDING MEDIUM AND METHOD OF OPTICALLY RECORDING INFORMATION THEREON

Jan van der Veen; Petrus J. Kivits, and Marinus R. J. de Bont, all of Eindhoven, Netherlands, assignors to U.S. Philips Corporation, New York, N.Y.

Filed Mar. 19, 1979, Ser. No. 21,397

Claims priority, application Netherlands, Jan. 15, 1979, 7900281

Int. Cl.³ G11B *3/74, 7/00;* G01G *15/34;* G01D *15/34*

U.S. Cl. 369—94 **12 Claims**

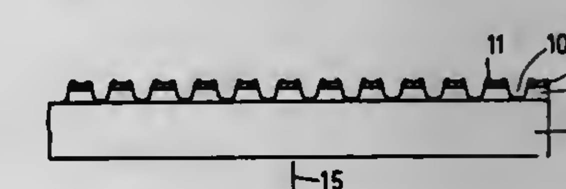

1. A recording system comprising a means for providing an information modulated laser beam and a recording medium positioned in the path of said laser beam, said recording medium comprising a substrate, transparent to said laser beam, provided on at least one side with a recording layer consisting at least substantially entirely of a compound of phthalocyanine and a metal, metal oxide or a metal halide.

4,298,976
MICROPHONOGRAPH RECORD

Ronald D. Irvin, 135 Belwood Gateway, Los Gatos, Calif. 95030; Steven R. Raayan, 4265 Ruthelma St., Palo Alto, Calif. 94307, and Hugh P. Sherlock, 1275 Dana Ave., Palo Alto, Calif. 94301
Continuation of Ser. No. 532,329, Dec. 13, 1974, abandoned. This application Jan. 31, 1977, Ser. No. 764,004
Int. Cl.³ G11B *3/68*
U.S. Cl. 369—282 **3 Claims**

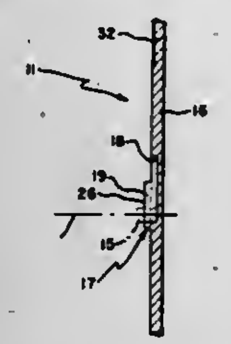

1. A stationary record having sound grooves on a sheet of plastic material, said record having a generally V-shaped locating means formed on one surface of said sheet of material and being accessible to a registration pin from the same side, said V-shaped locating means comprising a recess lying in a plane generally parallel to the plane of the sheet of material, said V-shaped locating means further comprising ribs extending above said sound grooves carried by the sheet of material being located on the same surface as the V-shaped locating means, said sound grooves being arranged in a generally spiral pattern, the pattern of said sound grooves having proximate their center a point which lies in close proximity to the apex of the V-shaped locating means.

4,298,977
BROADCAST AND ALTERNATE MESSAGE TIME SLOT INTERCHANGER

Robert P. Abbott, Freehold Township, Monmouth County; Ming-Chwan Chow, Holmdel; Anthony J. Cirillo, Cranford; Rudolph C. Drechsler, Freehold Township, Monmouth County, and Lee F. Horney, II, Fair Haven, all of N.J., assignors to Bell Telephone Laboratories, Incorporated, Murray Hill, N.J.
Filed Sep. 10, 1979, Ser. No. 73,849
Int. Cl.³ H04Q *11/04;* **H04M** *3/56*
U.S. Cl. 370—62 **5 Claims**

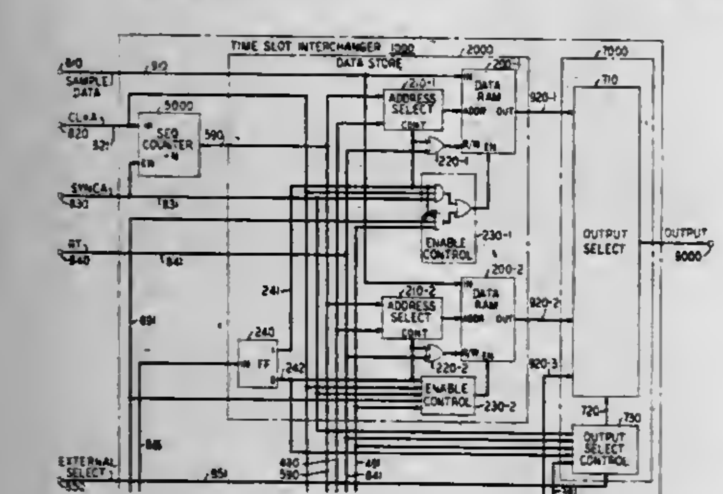

4. Apparatus for interchanging time slots (1000) said interchanging apparatus including an input terminal (810) adapted to receive an input frame, said input frame having a first plurality of input time slots, each input time slot for communicating a sample of information;

data storage means (2000) having a plurality of storage locations;

means for extending an input time slot sample from an input time slot through a storage location to an output time slot and thence to an output terminal (9000) for insertion in an output frame, said output frame having a second plurality of time slots and characterized in that said interchanging apparatus further comprises:

means (3000, 710, 730) for selectively substituting an alternate message in one or more output time slots in place of said input sample, said alternate message being different than said input sample, whereby said alternate message rather than said input sample may be broadcast through one or more output time slots to many locations.

4,298,978
DATA COMMUNICATION APPARATUS

Haruka Nakamura, Tokyo, Japan, assignor to Ricoh Company, Ltd., Tokyo, Japan
Filed Feb. 26, 1980, Ser. No. 124,996
Claims priority, application Japan, Mar. 6, 1979, 54-26444
Int. Cl.³ H04J *6/00*
U.S. Cl. 370—92 **6 Claims**

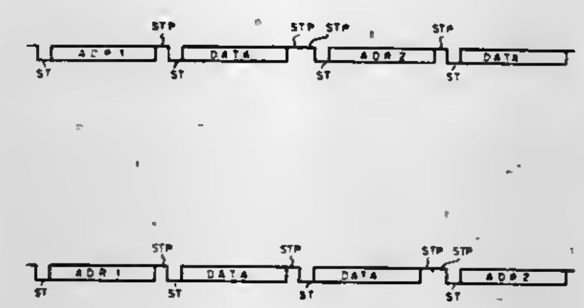

1. A data communication apparatus comprising:

transmission means for selectively transmitting groups of address signals and groups of data signals, each group of address signals comprising a start bit, a predetermined number of address bits and a stop bit, each group of data signals preceding another group of data signals comprising a start bit, said predetermined number of data bits and a stop bit, each group of data signals preceding a group of address signals comprising a start bit, said predetermined number of data bits and two stop bits; and

reception means for receiving groups of signals, the reception means comprising sensor means for sensing, in a group of signals, a bit following said predetermined number of bits plus two bits and processing a next group of signals as a group of address signals when said sensed bit is a stop bit and processing a next group of signals as a group of data signals when said sensed bit is a start bit.

4,298,979
DECODING TIM BUS STRUCTURE

Thomas R. Dobyns, Frederick; Richard R. Lindstrom, Brunswick, and Robert P. Ridings, Walkersville, all of Md., assignors to Communications Satellite Corporation, Washington, D.C.
Filed Sep. 27, 1979, Ser. No. 79,655
Int. Cl.³ H04J *3/06*
U.S. Cl. 370—104 **8 Claims**

2. In a data communications system having a plurality of stations, each of said stations transmitting a burst of data at a selected time, each burst having a plurality of channel portions, each station receiving selected channel portions of selected bursts of data, an apparatus for allocating said selected channel portions of selected bursts to said stations comprising:

(a) means for counting and tracking said bursts of data to provide an initialization signal;

(b) means receiving said initialization signal and a clock signal for counting said channel portions of data and for providing a portion count output;

(c) means receiving said portion count output for providing a selection signal;

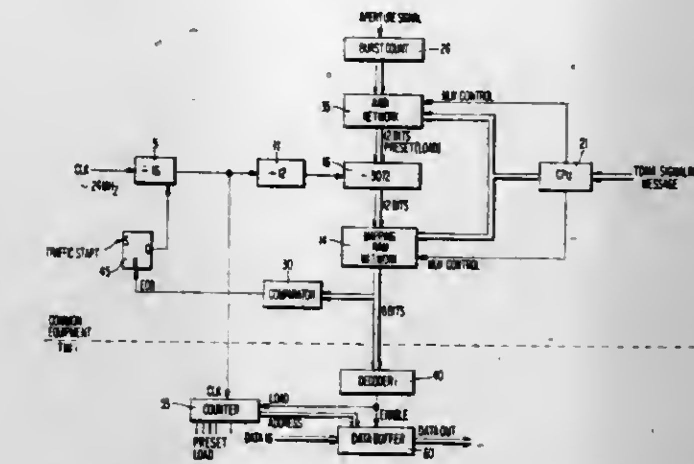

(d) wherein said means for counting said channel portions is preset in accordance with said initialization signal, said presetting occurring for each new burst of data.

4,298,980
LSI CIRCUITRY CONFORMING TO LEVEL SENSITIVE SCAN DESIGN (LSSD) RULES AND METHOD OF TESTING SAME

Johann Hajdu, and Guenter Knauft, both of, Boeblingen, Fed. Rep. of Germany, assignors to International Business Machines Corporation, Armonk, N.Y.
Filed Jul. 26, 1979, Ser. No. 60,932
Claims priority, application Fed. Rep. of Germany, Sep. 30, 1978, 2842750
Int. Cl.³ G01R *31/28;* **G06F** *11/00*
U.S. Cl. 371—25 **5 Claims**

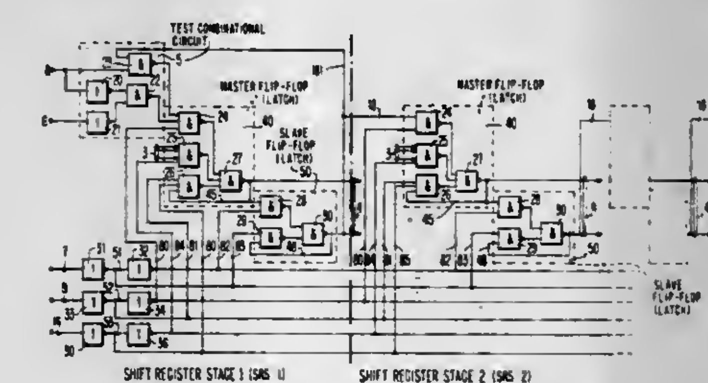

1. A method of testing an electronic system comprised of a plurality of interconnected minimum replaceable units, each of said minimum replaceable units includes a multi stage shift register having an input, an output, and shift contorls, and a test combinational circuit connected to said multi-stage shift register wherein each stage of each said shift register includes a master and a slave latch:

said method including the following steps:

(a) connecting said stages of each said multi-stage shift register of each said minimum replaceable unit to form a single large shift register having a input, an output, and shift controls;

(b) upon occurrence of a test pulse, utilizing said test combinational circuit of each said minimum replaceable unit to set a predetermined binary bit pattern in only a portion of each multi-stage shift register of each minimum replaceable unit;

(c) upon occurrence of a shift pulse utilizing said shift controls of said single large shift register to shift out the bit content of said single large shift register; and

(d) examining the shifted-out bit content of said single large shift register at the output of said single large shift register to determine whether or not said shifted-out bit content faithfully provides said predetermined bit pattern previously set in only a portion of each said multi-stage shift register of each minimum replaceable unit, whereby from examination of said shifted out bit pattern a minimum replaceable unit having a defective multi-stage shift register may be identified.

4,298,981
DECODING SHORTENED CYCLIC BLOCK CODES

Roger G. Byford, London, England, assignor to British Broadcasting Corporation, London, England
Filed Mar. 29, 1979, Ser. No. 25,169
Claims priority, application United Kingdom, Mar. 31, 1978, 12749/78
Int. Cl.³ G06F *11/10*
U.S. Cl. 371—37 **3 Claims**

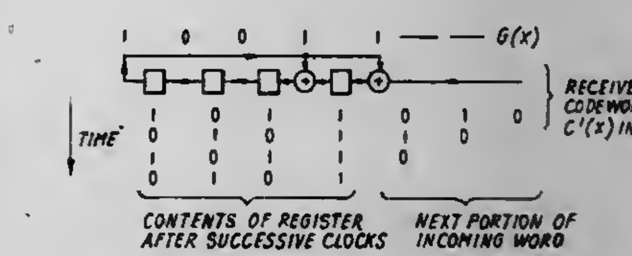

1. A method of decoding a shortened cyclic block code, comprising the steps of serially shifting a received codeword forwardly through a bidirectional syndrome register while so subtracting a generator word from the register content as to effect division of the received codeword, leaving the remainder in the register, and if the order of the remainder is not less than the number of bits in a maximum length correctable error, so reverse shifting the contents of the register as to reverse the division operation until the remainder is less than the number of bits in a maximum correctable error, and then combining the register contents with the received codeword to produce a corrected word.

4,298,982
FAULT-TOLERANT INTERFACE CIRCUIT FOR PARALLEL DIGITAL BUS

Victor Auerbach, Hamilton Square, N.J., assignor to RCA Corporation, New York, N.Y.
Filed Jun. 3, 1980, Ser. No. 156,264
Int. Cl.³ G06F *11/00*
U.S. Cl. 371—30 **10 Claims**

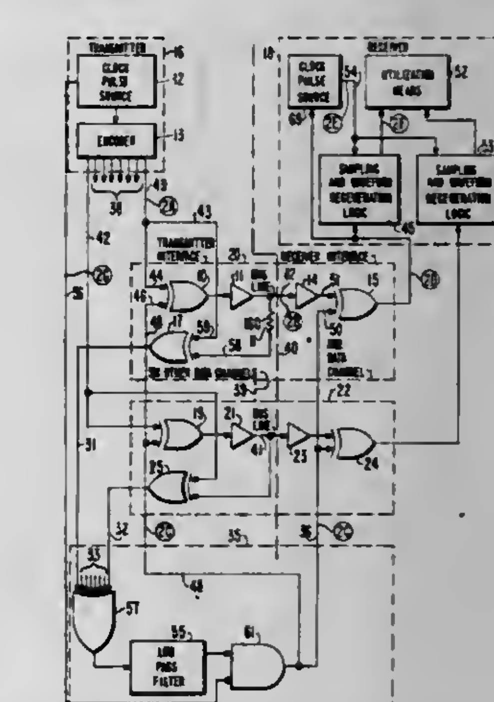

1. In a system comprising a transmitter for generating N data signals each having first and second logic levels, a receiver for receiving said N signals and N data channels each comprising

bus means for transmitting said N signals, a circuit means for detecting and correcting a stuck signal level condition on one of said bus means and comprising in each data channel;
first and second Exclusive OR gate means each having first and second input means and an output means;
means for supplying one of said data signals to said first input means of said first Exclusive OR gate means and for supplying the output of said second Exclusive OR gate means to said receiver; and
bus means connecting the output means of said first Exclusive OR gate means to the first input means of said second Exclusive OR gate means; and
logic means responsive to equal signal logic levels of said bus means and said data signals of all of said data channels to supply said first signal logic level to the second input terminals of said first and second Exclusive OR gate means and responsive to unequal signal levels of said bus means and said data signals of any of said data channels to supply said second signal logic level to said second input terminals of said first and second Exclusive OR gate means.

4,298,983

AUTOMATIC EQUALIZATION SYSTEM IN FM COMMUNICATION CIRCUIT

Kazuo Kawai, Yokohama; Hidetaka Yanagidaira, Omiya, and Michitoshi Tamori, Tokyo, all of Japan, assignors to Kokusai Denshin Denwa Kabushiki Kaisha, Tokyo, Japan

Filed Oct. 26, 1979, Ser. No. 88,521

Claims priority, application Japan, Oct. 27, 1978, 53/131708; Nov. 29, 1978, 53/146583

Int. Cl.³ H09B *15/00*

U.S. Cl. 375—12 **2 Claims**

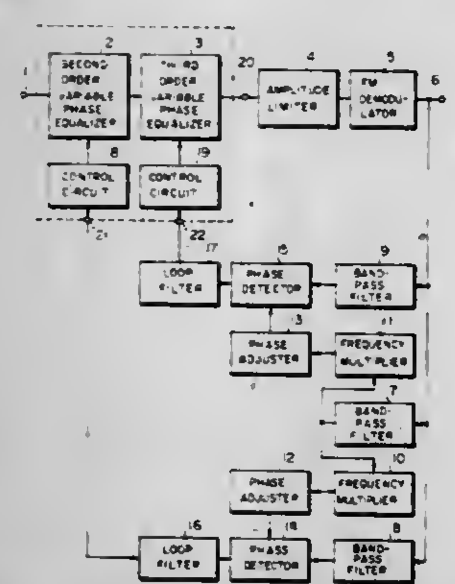

1. An automatic phase equalization system in an FM communication circuit comprising:
input terminal means for receiving a transmitted FM signal;
variable phase equalizer means connected to said input terminal means to develop an equalized output from said transmitted FM signal;
FM demodulator means connected to said variable phase equalizer means to provide an demodulated baseband output from said equalized output;
first filter means connected to said FM demodulator means for obtaining at least one harmonic wave of a pilot signal included in said demodulated baseband output;
second filter means connected to said FM demodulator means for obtaining said pilot signal;
frequency multiplying means connected to said second filter means to obtain at least one reference wave by frequency-multiplying said pilot signal from said second filter means;
phase detector means connected to said first filter means and said frequency multiplying means to phase-detect said harmonic wave by the use of said reference wave as a reference so as to develop at least one detected output;
control means connected to said phase detector means and said variable phase equalizer means for controlling said variable phase equalizer means by the detected output to reduce the level of said harmonic wave; and
output terminal means connected to said FM demodulator means for obtaining the demodulated baseband signal.

4,298,984

METHOD AND APPARATUS FOR IMPROVING ERROR RATE ON RADIO TELETYPE CIRCUITS

Charles L. Baker, Richardson, Tex., assignor to Her Majesty the Queen in right of Canada, as represented by the Minister of National Defence, Canada

Filed Oct. 6, 1976, Ser. No. 729,084

Int. Cl.³ H04B *7/06*

U.S. Cl. 375—40 **8 Claims**

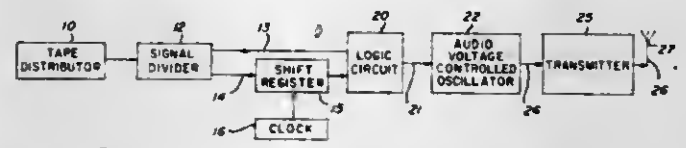

1. A time diversity method of transmitting binary coded data comprising dividing said data into first and second identical data streams, delaying the data in said second data stream by a predetermined number of frames, subsequently making a comparison of the data in said first and second data streams and producing one-of-four digital signals dependent on said comparison, using said one-of-four signals to produce corresponding audio tones, and transmitting a carrier modulated by said audio tones.

4,298,985

DIGITAL FILTER BANK DETECTOR

Arthur H. Ballard, Bethesda, Md., and Theodore J. Klein, Atlantic Highlands, N.J., assignors to The United States of America as represented by the Secretary of the Army, Washington, D.C.

Filed Dec. 31, 1979, Ser. No. 108,903

Int. Cl.³ H03D *7/00*

U.S. Cl. 375—82 **10 Claims**

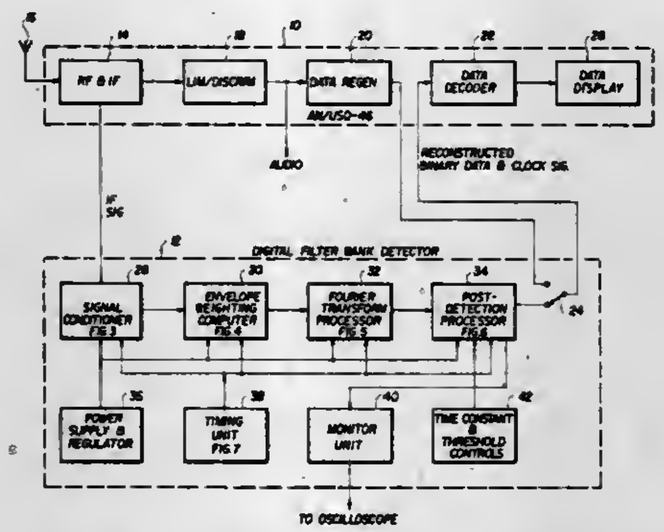

1. A digitally synthesized filter bank detector incorporated in a radio receiver for recovering a communications signal from a received radio signal including said communications signal, comprising in combination:
means for converting said received radio signal to a sequence of multi-bit digital words at a predetermined sampling rate;
first digital processor means coupled to said converting means, being responsive to said sequence of digital words, and operable to multiply the digital words by a desired envelope weighting function representing one of a plurality of substantially like filters sought to be simulated;

second digital processor means coupled to said first digital processor means, being responsive to the envelope-weighted sequence of digital words provided thereby, and operable to multiply the digital words of said envelope-weighted sequence by a constant amplitude center frequency weighting function for each of a plurality of substantially equally spaced center frequencies and to compute the envelope amplitudes of said digital words thereat;
said first and second digital processor digitally implementing thereby a bank of contiguous digital filters having substantially the same shape of frequency response and differing in center frequency over a predetermined frequency bandwidth; and
third digital processor means coupled to said second digital processor means, being responsive to the envelope and center frequency weighted sequence of digital words, and being operable to demodulate said sequence and provide a digital representation of said communications signal which is then adapted to be decoded and displayed by said radio receiver.

4,298,986

RECEIVER FOR PHASE-SHIFT MODULATED CARRIER SIGNALS

William C. Hughes, Scotia, N.Y., assignor to General Electric Company, Schenectady, N.Y.

Filed Dec. 26, 1979, Ser. No. 106,451

Int. Cl.³ H04L *27/22, 27/06;* **H03D** *3/22*

U.S. Cl. 375—84 **23 Claims**

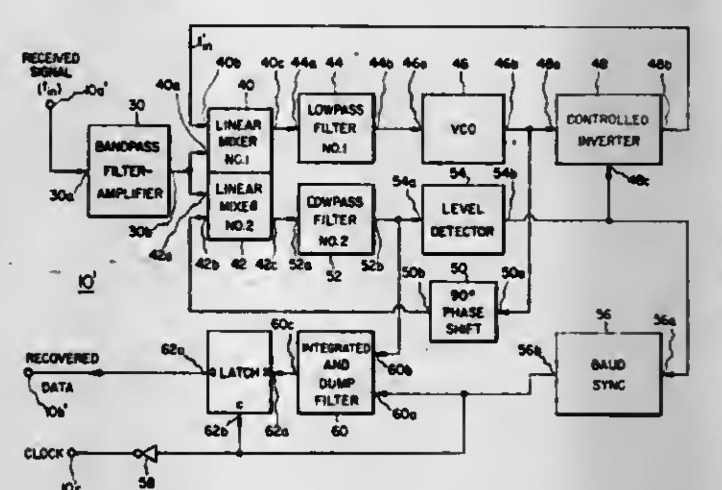

1. A receiver for recovering digital data modulated upon a carrier waveform in a digital communications system, comprising:
means for receiving said carrier modulated by daid digital data;
means for band-pass filtering the received modulated carrier;
loop means receiving the band-pass filtered modulated carrier for providing a loop signal having a frequency essentially locked to the frequency of the received modulated carrier;
means for mixing said loop signal with the bandpass-filtered modulated carrier to form a output signal responsive to the phase difference therebetween;
means for low-pass filtering said mixing means output signal to recover the digital data from said modulated carrer;
means receiving the low-pass-filtered output signal for recovering a baud synchronization signal therefrom, and including means for providing a pulse at each transition at the recovered digital data waveform received from said low-pass filtering means;
means for providing a local clock waveform at first and second frequencies respectively greater than and less than the nominal frequency of the transitions of the recovered digital data waveform;
means for detecting the magnitude of the timing difference between said transition pulses and the transitions of said local clock waveform; and
means for controlling the percentage of time during which each of said first and second frequencies is provided by said local clock waveform providing means responsive to the dectected transition timing difference information, to cause the local clock and digital data waveform transitions to occur essentially simultaneously; said local clock waveform being the local baud synchronizing signal.

4,298,987

MEMORY-BASED FRAME SYNCHRONIZER

Raymond J. Stattel, Lanham, and James K. Niswander, Silver Spring, both of Md., assignors to The United States of America as represented by the Administrator, National Aeronautics and Space Administration, Washington, D.C.

Filed Mar. 12, 1980, Ser. No. 129,779

Int. Cl.³ H04J *3/06, 6/00*

U.S. Cl. 375—106 **4 Claims**

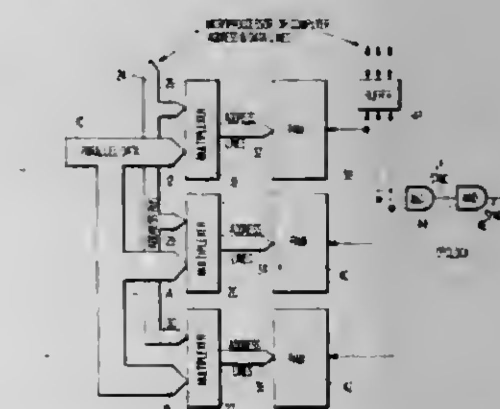

1. A frame synchronizer for use in a serial digital communications system, the frame synchronizer being of the type having a serial-to-parallel converter with a parallel data bus, at least one sync word comparator, a computer driven address bus, and counter and control logic circuits, wherein said sync word comparator comprises:
a multiplexer connected to and driving a random access memory by and through address lines,
said multiplexer having two sets of parallel inputs, one set being connected to said parallel data bus which may contain a desired sync word and the other set being connected to said address bus which transmits said desired sync word, said multiplexer periodically outputting said desired sync word and normally outputting data from said parallel data bus, and
said random access memory providing a unique logic output upon receiving the desired sync word from said multiplexer.

4,298,988

DIGITAL CHANNEL SELECTION AND FINE TUNING SYSTEM

Charles L. Dages, Colmar, Pa., assignor to Jerrold Electronics Corp., Hatboro, Pa.

Continuation-in-part of Ser. No. 10,408, Feb. 8, 1979. This application Aug. 10, 1979, Ser. No. 65,515

Int. Cl.³ H04B *1/26*

U.S. Cl. 455—182 **7 Claims**

1. A closed loop double heterodyne digital tuning system, the system comprising,
first local oscillator means responsive to a variable control voltage for generating an oscillation having a frequency dependent on the magnitude of said control voltage,
sampling means for sampling the actual output frequency of said oscillator means for a predetermined interval of time and for generating a first digital word representing the actual value of said frequency,
means responsive to incoming channel information for gen-

erating a selected one of plurality of address words, each address word representing a particular video operating channel,

storage means for storing a plurality of second digital words, each of the second digital words representing a desired nominal value of frequency for said oscillator means,

means responsive to the address words for retrieving from said storage means one of said second digital words, the particular location of said second digital word within said storage means being identified by said address word,

a second local oscillator,

second local oscillator drift correcting means including means for sensing the output frequency of said second local oscillator, and means connected to said sensing

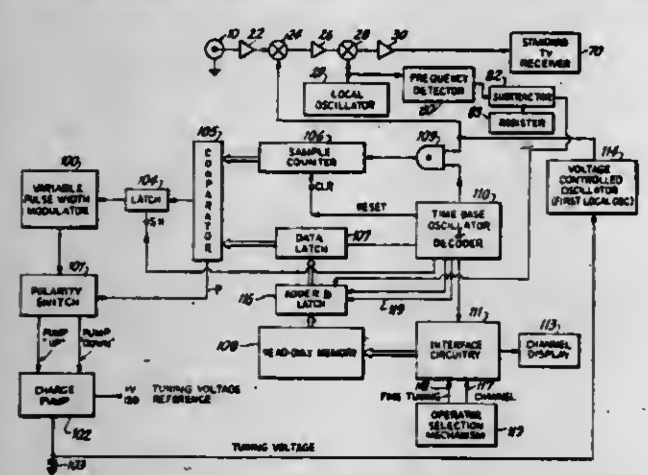

means for generating a third digital word representative of the frequency variation of said second local oscillator,

means for combining said third digital word with the second digital word retrieved from said storage means and for storing the results of such combination,

comparator means for comparing the values of said first digital word with the value of said stored combined second and third digital words, and

means responsive to a difference in value between said first digital word, and said stored second and third digital words determined by said comparator means for varying said control voltage for said oscillator means, whereby said actual frequency value is changed to the correct frequency value.

4,298,989
TUNING APPARATUS
Noboru Someno, Tokyo; Michimasa Komatsubara, Chiba, and Masakatsu Toyoshima, Tokyo, all of Japan, assignors to Sony Corporation, Tokyo, Japan
Filed Jan. 11, 1980, Ser. No. 111,188
Claims priority, application Japan, Jan. 17, 1979, 54-4294
Int. Cl.³ H04B *1/06*
U.S. Cl. 455—183 18 Claims

1. Tuning apparatus for a radio receiver, comprising an adjustable tuning section having a tuning condition which is adjustable over a frequency range to be tuned to selected broadcast frequencies; an IF section coupled to said tuning section to produce an IF signal; IF detecting means for detecting whether said IF signal corresponds to a signal received on a broadcast frequency to which said tuning section is tuned, said detecting means producing a tune indicating signal when said tuning section is tuned to a broadcast frequency and said received signal is either a relatively high or a relatively low level signal and said detecting means producing said tune indicating signal when said tuning section is tuned to a frequency within a predetermined amount of said broadcast frequency and said received signal is a relatively high level signal; adjusting means for changing the tuning condition of said tuning section in predetermined frequency steps selectively in an upward or downward direction; and sensing means for sensing that said tune indicating signal has been produced to enable said adjusting means to change the tuning condition of said tuning section by predetermined frequency step and then to (a) disable said adjusting means if said tune indicating signal is sensed following the change by said predetermined frequency step of said tuning condition so as to maintain the

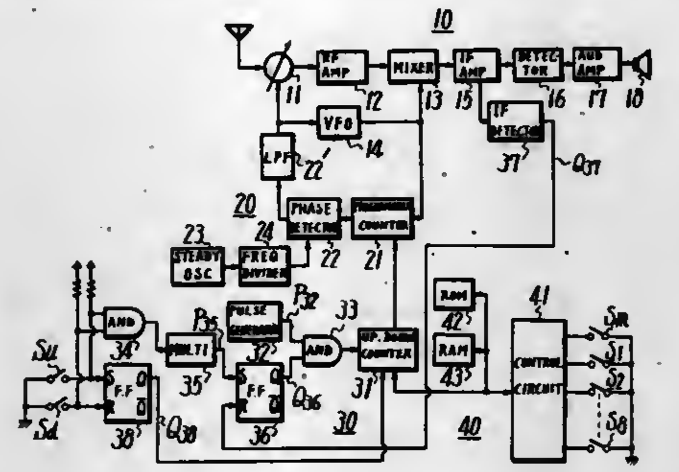

last-attained tuning condition thereof, or (b) return the tuning condition of said tuning section by said predetermined frequency step if said tune indicating signal is not sensed following said change by said predetermined frequency step of said tuning condition.

4,298,990
FREQUENCY CONVERTER OF ELECTROMAGNETIC RADIATION IN MILLIMETER AND SUBMILLIMETER WAVELENGTH RANGE
Halina Bielska-Lewandowska, Warsaw, Poland; Natalija Irisova, Moscow, U.S.S.R.; Grzegorz Jung; Stanislaw J. Lewandowski, both of Warsaw, Poland; Aleksandr Prohorov, Moscow, U.S.S.R.; Roman Sobolewski, Warsaw, Poland, and Eugenij Vinogradov, Moscow, U.S.S.R., assignors to Polska Akademia Nauk Instytut Fizyki, Warsaw, Poland
Filed Nov. 19, 1979, Ser. No. 95,879
Claims priority, application Poland, Nov. 4, 1978, 210702
Int. Cl.³ H04B *1/26;* H02M *5/00*
U.S. Cl. 455—325 4 Claims

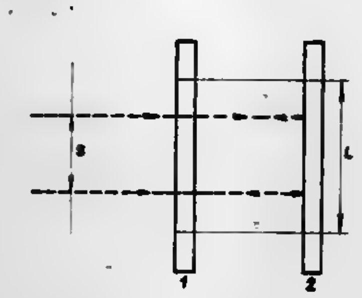

1. A microwave frequency converter for receiving an electromagnetic radiation beam propagating in a direction to be incident on said converter, said beam being of a given cross-sectional size and microwave frequency, said converter comprising an open resonator having at least two spaced reflectors lying one behind the other in substantially parallel planes substantially normal to said direction, whereby an axis through centers of said reflectors is substantially aligned with an axis through a center of said beam, said reflectors being of a size larger than said given cross-sectional size, at least one of said reflectors comprising a plurality of parallel metallic conductors mounted on a flat dielectric surface and equidistantly spaced from one another by a distance less than the wavelength of said given microwave frequency, each conductor incorporating at least one Josephson junction.

DESIGN PATENTS

GRANTED NOV. 3, 1981

ERRATA

For CLASS	See PATENT NO.
D32-050	261,601
D32-055	261,202
D34-024	261,634
D32-032	261,655

DESIGNS

NOVEMBER 3, 1981

261,570
CONTOURED SANDAL INNERSOLE
Andrew W. Gordon, Swampscott, and Carlman Fisher, Marblehead, both of Mass., assignors to Northern Shoe Bindings Co., Inc., Lynn, Mass.
Filed Jun. 25, 1979, Ser. No. 51,955
Term of patent 14 years
Int. Cl. D2—*04*
U.S. Cl. D2—318

261,571
TACKLE CADDY
George A. Hanson, 858 Crestview Dr., Palatine, Ill. 60067
Filed Apr. 13, 1979, Ser. No. 29,802
Term of patent 14 years
Int. Cl. D03—*02*
U.S. Cl. D3—38

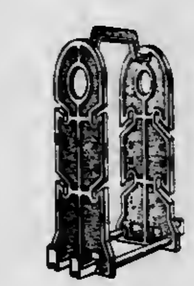

261,572
LUGGAGE BAG
Joseph Y. Pelavin, North Bergen, N.J., and Rene Locoste, Paris, France, assignors to Locoste Alligator S.A., Minneapolis, Minn.
Filed Mar. 7, 1980, Ser. No. 128,051
Term of patent 14 years
Int. Cl. D3—*01*
U.S. Cl. D3—71

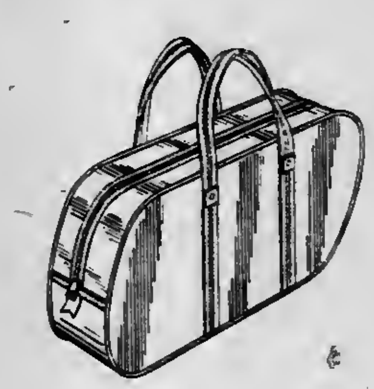

261,573
COMBINED ROOM DIVIDER, TELEVISION CABINET, STEREO CABINET, BAR AND AQUARIUM SUPPORT UNIT
Richard Lattimore, 504-B Saunders Pl., High Point, N.C. 27260
Filed Nov. 13, 1978, Ser. No. 960,583
Term of patent 14 years
Int. Cl. D06—*04*
U.S. Cl. D6—4

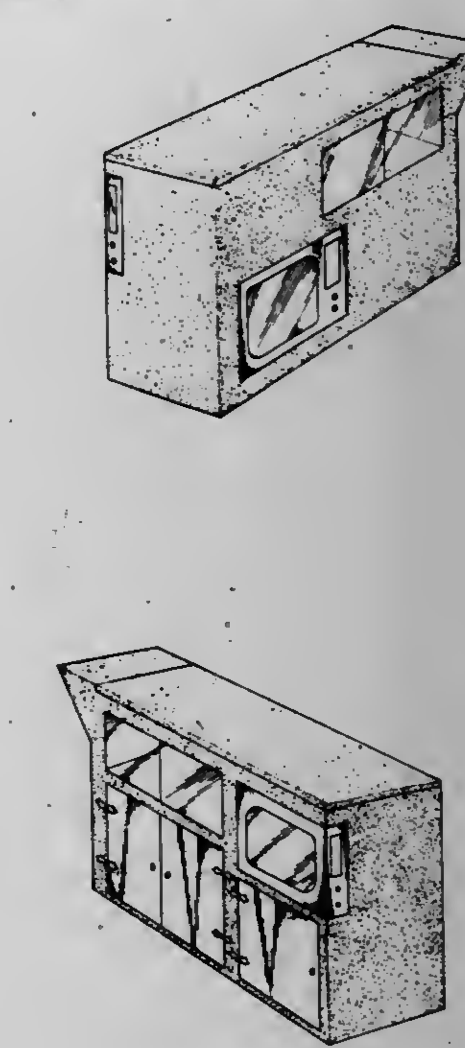

261,574
PORTABLE HEAD REST
Sharon A. Lovejoy, 75 Spring St., Burlington, Vt. 05401
Filed Oct. 3, 1979, Ser. No. 81,561
Term of patent 14 years
Int. Cl. D6—*99*
U.S. Cl. D6—29

261,575
COMBINED STOOL AND FOOTREST
Jeffrey R. Fear, 207 Queens Quay West, Toronto, Ontario, Canada
Filed May 10, 1978, Ser. No. 904,719
Term of patent 14 years
Int. Cl. D6—*01*
U.S. Cl. D6—35

261,576
CHAIR
Robert Heritage, London, England, assignor to Steelcase Inc., Grand Rapids, Mich.
Filed Jun. 22, 1978, Ser. No. 918,327
Term of patent 14 years
Int. Cl. D6—*01*
U.S. Cl. D6—41

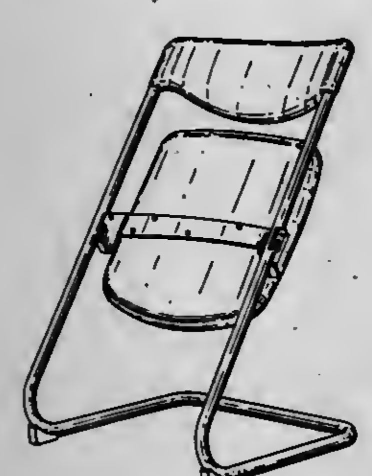

261,577
COMBINED CHAIR, TABLET ARM AND MAGAZINE RACK
Robert Heritage, London, England, assignor to Steelcase Inc., Grand Rapids, Mich.
Filed Jun. 22, 1978, Ser. No. 918,324
The portion of the term of this patent subsequent to Nov. 3, 1995, has been disclaimed.
Term of patent 14 years
Int. Cl. D6—*011*
U.S. Cl. D6—42

261,578
COMBINED CHAIR AND TABLET ARM
Robert Heritage, London, England, assignor to Steelcase Inc., Grand Rapids, Mich.
Filed Jun. 22, 1978, Ser. No. 918,325
The portion of the term of this patent subsequent to Nov. 3, 1995, has been disclaimed.
Term of patent 14 years
Int. Cl. D6—*05*
U.S. Cl. D6—42

261,579
COMBINED CHAIR, TABLET ARM, ASHTRAY AND MAGAZINE RACK
Robert Heritage, London, England, assignor to Steelcase Inc., Grand Rapids, Mich.
Filed Jun. 22, 1978, Ser. No. 918,328
The portion of the term of this patent subsequent to Nov. 3, 1995, has been disclaimed.
Term of patent 14 years
Int. Cl. D6—*05*
U.S. Cl. D6—42

261,580
CHAIR
Gae Aulenti, Milan, Italy, assignor to Knoll International, Inc., New York, N.Y.
Division of Ser. No. 827,609, Aug. 25, 1977. This application Mar. 24, 1980, Ser. No. 133,656
Term of patent 14 years
Int. Cl. D6—*01*
U.S. Cl. D6—66

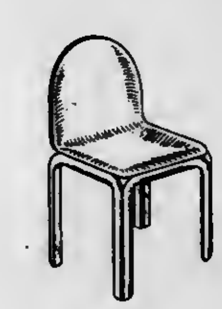

261,581
FISHING ROD HOLDER
Edward B. Buchanan, 15301 S. Bloomfield, Norwalk, Calif. 90650
Filed Nov. 23, 1979, Ser. No. 96,637
Term of patent 14 years
Int. Cl. D6—*04;* D8—*08;* D22—*05*
U.S. Cl. D6—125

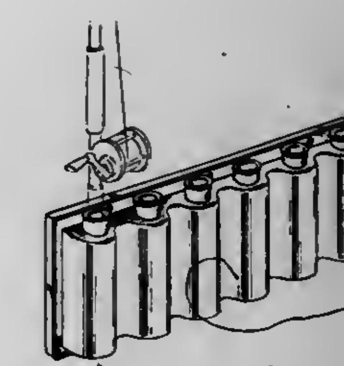

261,582
COMBINED TELEPHONE KIOSK AND SUPPORT THEREFOR
Donald M. Genaro, Bergen County, N.J.; John N. McGarvey, Delaware County, Pa., and Lajos Novak, Bergen County, N.J., assignors to Western Electric Company, Inc., New York, N.Y.
Filed Mar. 28, 1978, Ser. No. 891,102
Term of patent 14 years
Int. Cl. D25—*03*
U.S. Cl. D6—181

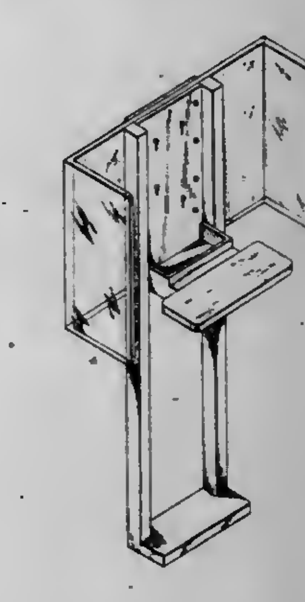

261,583
HOLDER FOR BAR ACCESSORIES
Manuel C. Labasan, 129 Kuhuoi St., Kahului, Hi. 96732
Filed Jun. 8, 1979, Ser. No. 46,687
Term of patent 14 years
Int. Cl. D06—*04*
U.S. Cl. D6—189

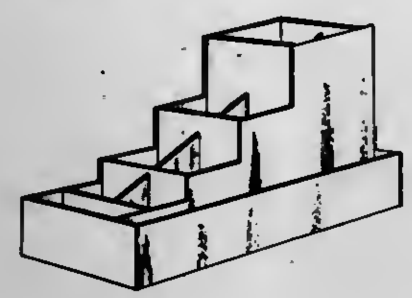

261,584
HIDE-A-BED MOVER CLAMP
Roy L. Enders, 978 N. 1st St., Banning, Calif. 92220
Filed Sep. 14, 1979, Ser. No. 75,597
Term of patent 14 years
Int. Cl. D6—*06*
U.S. Cl. D6—198

261,585
PICTURE DISPLAY FRAME
Donald B. Smith, R.R. #1, Mount Brydges, Ontario, Canada (N0L 1W0)
Filed Jun. 4, 1979, Ser. No. 44,844
Term of patent 14 years
Int. Cl. D6—*07*
U.S. Cl. D6—234

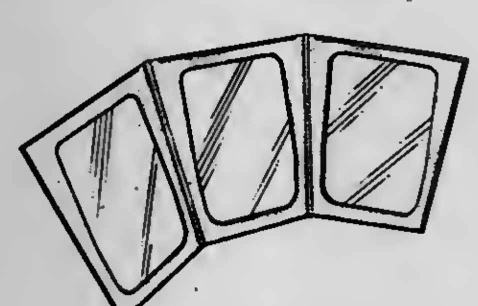

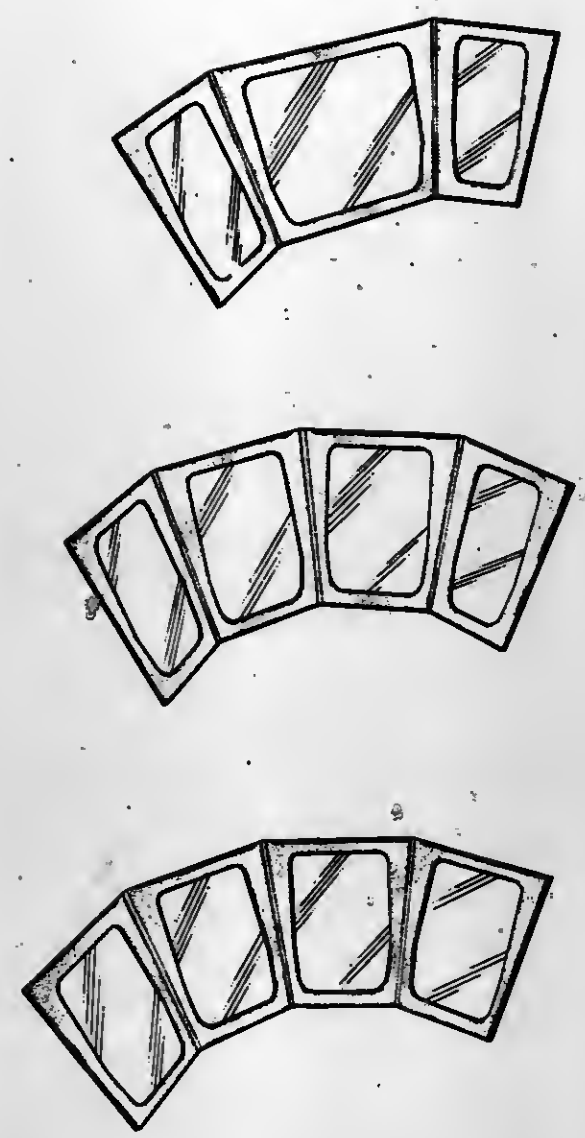

261,586
COVERED FOOD TRAY
Walter B. Herbst, Evanston, Ill., assignor to American Hospital Supply Corporation, Evanston, Ill.
Filed Sep. 17, 1979, Ser. No. 76,513
Term of patent 14 years
Int. Cl. D07—*99*
U.S. Cl. D7—16

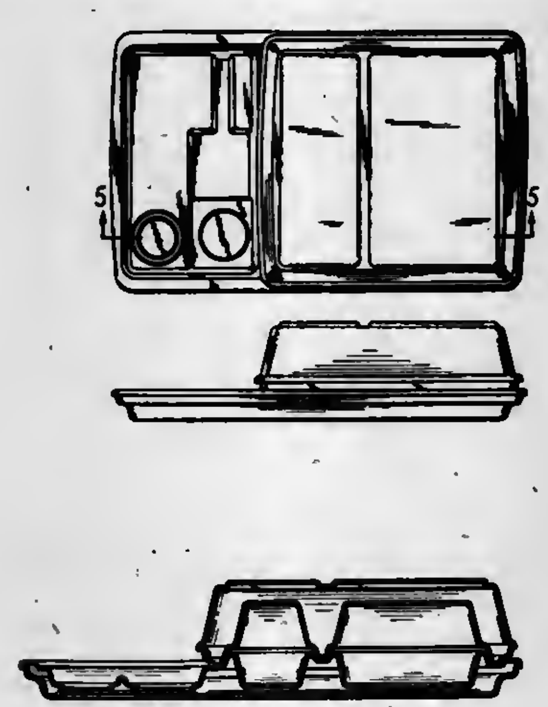

261,587
COVERED FOOD TRAY
Walter B. Herbst, Evanston, Ill., assignor to American Hospital Supply Corporation, Evanston, Ill.
Filed Sep. 17, 1979, Ser. No. 76,514
Term of patent 14 years
Int. Cl. D07—*99*
U.S. Cl. D7—16

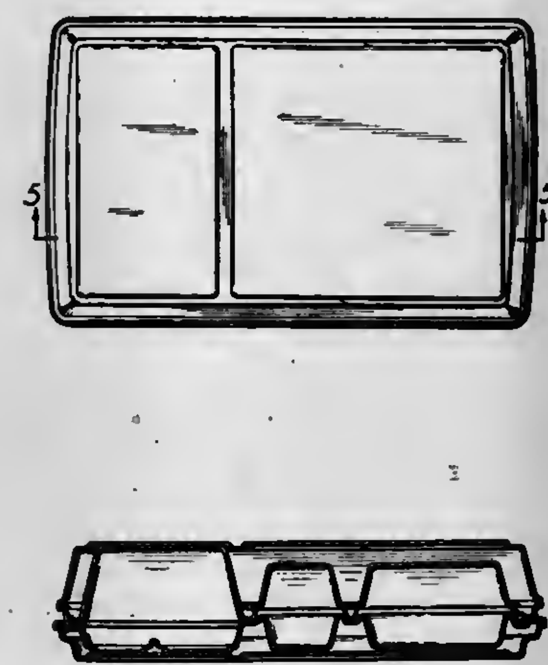

261,588
SERVING TRAY UNIT
Heinrich Fichte, Rotdornstrasse 5, 4005 Meerbusch, Fed. Rep. of Germany
Filed Aug. 24, 1979, Ser. No. 69,662
Claims priority, application Fed. Rep. of Germany, Feb. 24, 1979, 15MR397
Term of patent 14 years
Int. Cl. D07—*99*
U.S. Cl. D7—38

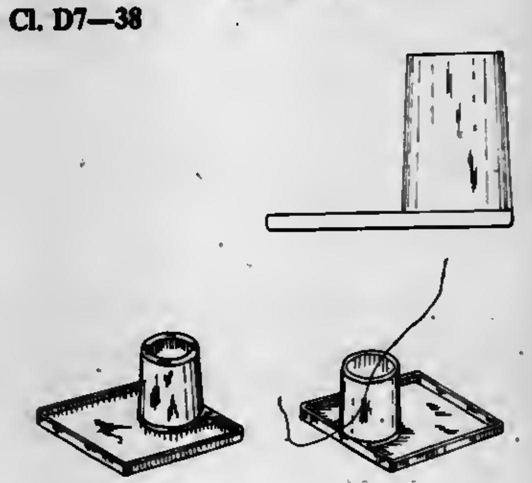

261,589
FOOD TRAY
Walter B. Herbst, Evanston, Ill., assignor to American Hospital Supply Corporation, Evanston, Ill.
Filed Sep. 17, 1979, Ser. No. 76,511
Term of patent 14 years
Int. Cl. D07—*99*
U.S. Cl. D7—38

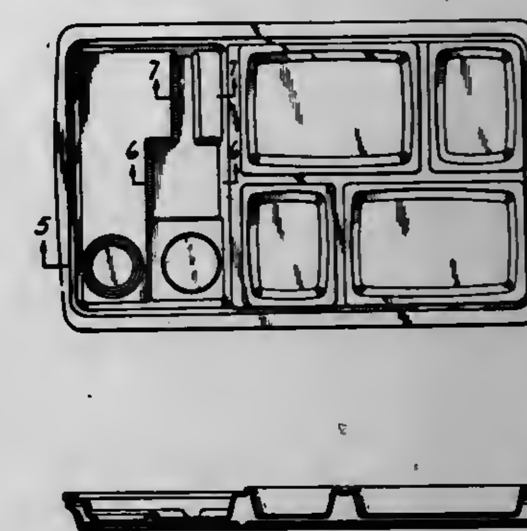

261,590
LID FOR A FOOD TRAY
Walter B. Herbst, Evanston, Ill., assignor to American Hospital Supply Corporation, Evanston, Ill.
Filed Sep. 17, 1979, Ser. No. 76,512
Term of patent 14 years
Int. Cl. D07—*99*
U.S. Cl. D7—40

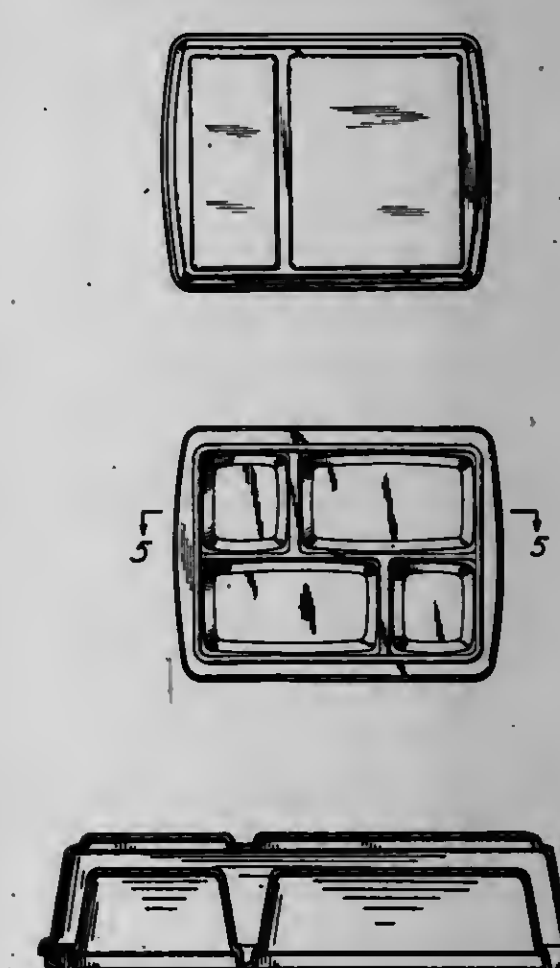

261,591
FOOD TRAY LID
Walter B. Herbst, Evanston, Ill., assignor to American Hospital Supply Corporation, Evanston, Ill.
Filed Sep. 17, 1979, Ser. No. 76,515
Term of patent 14 years
Int. Cl. D07—*99*
U.S. Cl. D7—40

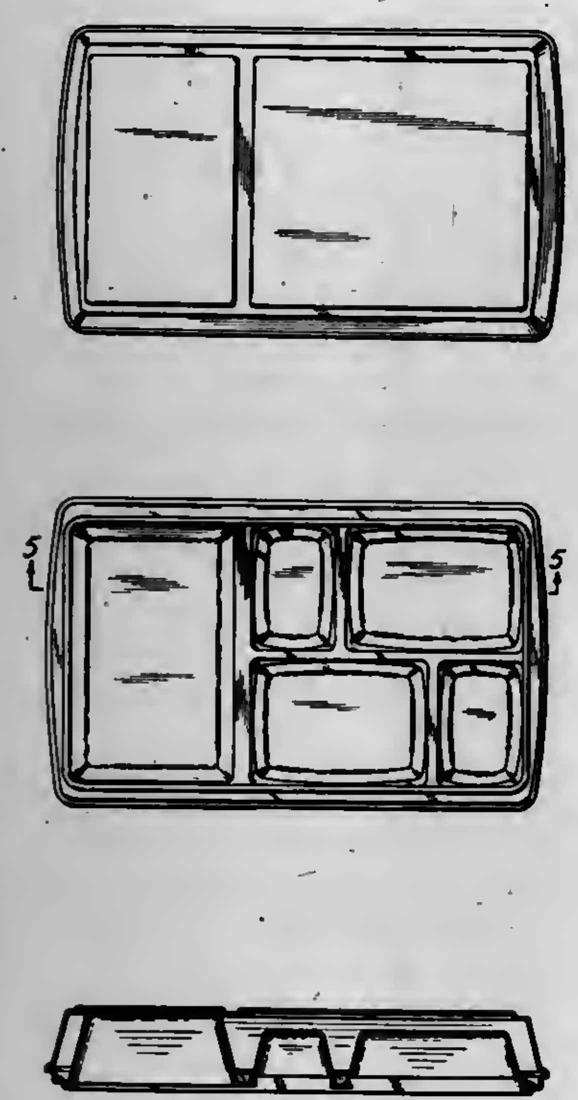

261,592
COASTER-HOLDER FOR A BEVERAGE CONTAINER
Michael C. Wilson, 164 Carleton, Glen Ellyn, Ill. 60137
Filed May 10, 1979, Ser. No. 37,735
Term of patent 14 years
Int. Cl. D07—*06*
U.S. Cl. D7—45

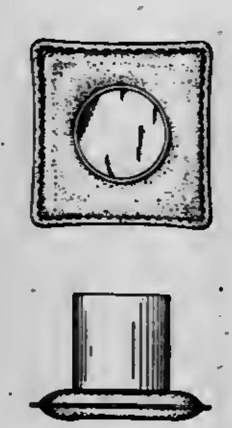

261,593
ICE PAIL
Toshio Miyazaki, Tsubame, Japan, assignor to Kabushiki Kaisha Miyazaki Seisakusho, Japan
Filed Jul. 30, 1979, Ser. No. 62,169
Claims priority, application Japan, Feb. 5, 1979, 54-4141
Term of patent 14 years
Int. Cl. D07—*01*
U.S. Cl. D7—78

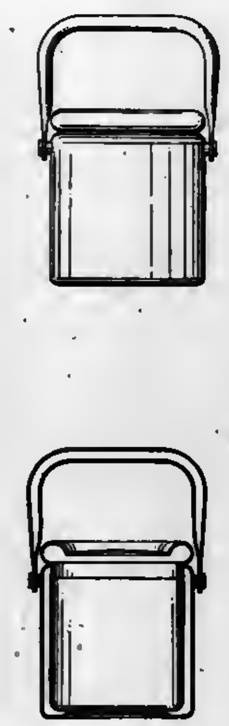

261,594
EGG COOKER
Melvin H. Boldt, Glenview; Thurber H. Morrison, Evanston, and Francis J. Greb, Palatine, all of Ill., assignors to National Presto Industries, Inc., Eau Claire, Wis.
Filed Mar. 5, 1979, Ser. No. 17,707
The portion of the term of this patent subsequent to Aug. 21, 1993, has been disclaimed.
Term of patent 14 years
Int. Cl. D07—*02*
U.S. Cl. D7—94

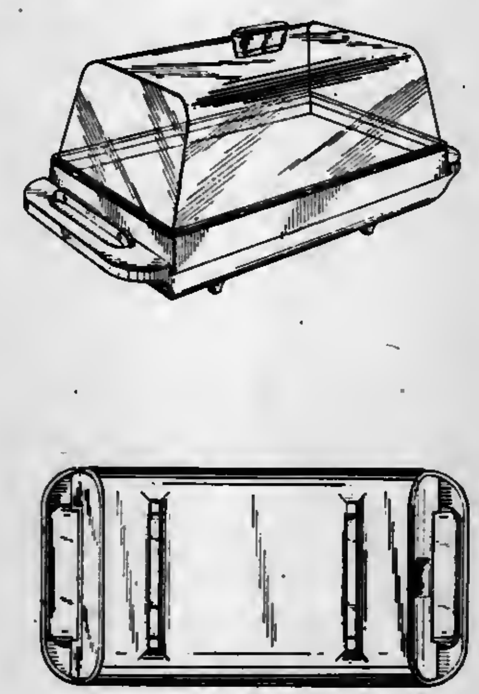

261,595
IMPLEMENT FOR SLIDING SHELVES
Bernard Yellin, Oak Brook, Ill., assignor to Bernard Industries Co., Chicago, Ill.
Filed Jul. 2, 1979, Ser. No. 54,374
Term of patent 14 years
Int. Cl. D7—*99*
U.S. Cl. D7—99

261,596
CAMPFIRE COOK STAND
Robert F. Beck, Jr., P.O. Box 0-14, R.R. #4, Delphi, Ind. 46923
Filed Dec. 17, 1979, Ser. No. 104,698
Term of patent 14 years
Int. Cl. D7—*02*
U.S. Cl. D7—109

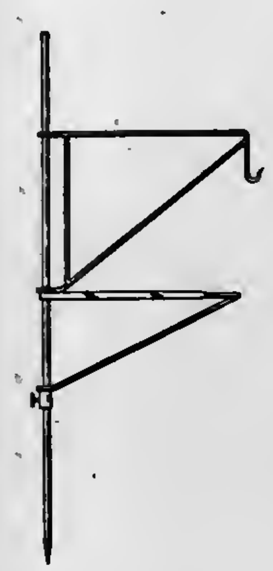

261,597
MICROWAVE OVEN
Yoshio Soganoya, and Takao Miyake, both of Osaka, Japan, assignors to Sharp Corporation, Osaka, Japan
Filed May 25, 1979, Ser. No. 42,282
Claims priority, application Japan, Dec. 4, 1978, 53-51516
Term of patent 14 years
Int. Cl. D7—*02*
U.S. Cl. D7—128

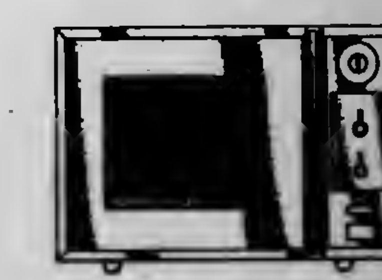

261,598
MICROWAVE OVEN
Yoichi Takahashi, Kouriyama; Masamichi Yamamura, Osaka; Toshio Harada, and Shigefumi Inoue, both of Nara, all of Japan, assignors to Matsushita Electric Industrial Co., Ltd., Kadoma, Japan
Filed Sep. 17, 1979, Ser. No. 75,875
Claims priority, application Japan, Mar. 16, 1979, 54-10691
Term of patent 14 years
Int. Cl. D7—*02*
U.S. Cl. D7—128

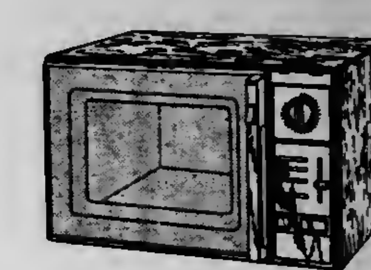

261,599
MICROWAVE OVEN
Yoichi Takahashi; Kenjiro Itsumi, both of Kouriyama; Toshio Harada, and Shigefumi Inoue, both of Nara, all of Japan, assignors to Matsushita Electric Industrial Co., Ltd., Kadoma, Japan
Filed Sep. 17, 1979, Ser. No. 75,879
Claims priority, application Japan, Mar. 16, 1979, 54-10689
Term of patent 14 years
Int. Cl. D7—*02*
U.S. Cl. D7—128

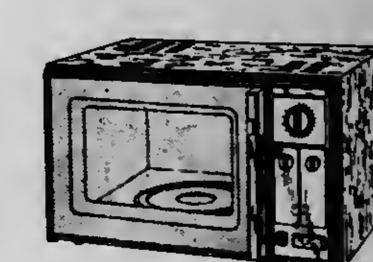

261,600
BARBECUE COWL
Robert S. Langtry, 17 W. Crescent St., McMahon's Point, New South Wales 2060, Australia
Filed Dec. 22, 1978, Ser. No. 972,371
Claims priority, application Australia, Jun. 23, 1978, 75133/78
Term of patent 14 years
Int. Cl. D7—*99*
U.S. Cl. D7—129

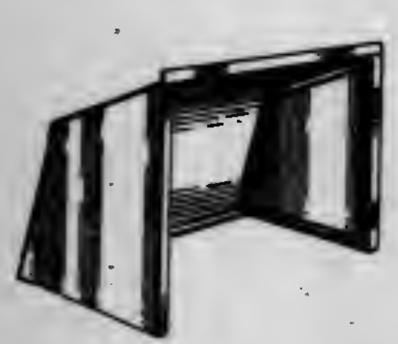

261,601
PAN CLEANER OR SIMILAR ARTICLE
John S. Kettlestrings, Wheaton, Ill., assignor to Enduro Corporation, Pella, Iowa
Filed Jul. 14, 1978, Ser. No. 924,871
Term of patent 14 years
Int. Cl. D7—*05*
U.S. Cl. D32—40

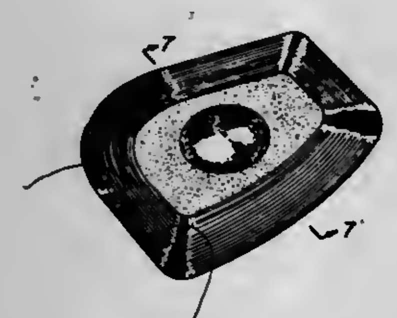

261,602
DISH PAN
Howard A. Anderson, Pittsburgh, Pa., assignor to Cities Service Company, Tulsa, Okla.
Filed Mar. 26, 1979, Ser. No. 24,239
Term of patent 14 years
Int. Cl. D7—*05*
U.S. Cl. D32—55

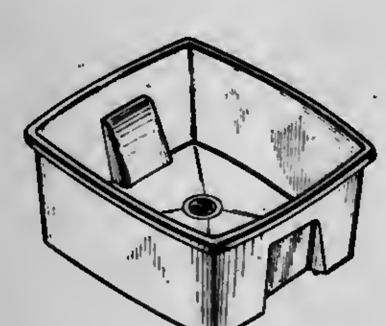

261,603
NEWSPAPER GRATE
Wilfred R. George, 16 Bonita Ave., Piedmont, Calif. 94611
Filed Jan. 9, 1980, Ser. No. 110,833
Term of patent 14 years
Int. Cl. D7—*08*
U.S. Cl. D7—207

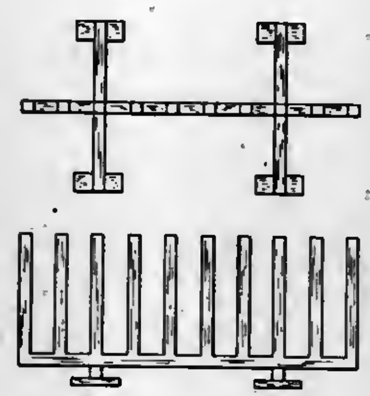

261,604
CHARCOAL SCUTTLE
Thomas E. Wright, 6340 Americana Dr., Clarendon Hills, Ill. 60514
Filed Aug. 13, 1979, Ser. No. 66,250
Term of patent 14 years
Int. Cl. D7—*08*
U.S. Cl. D7—212

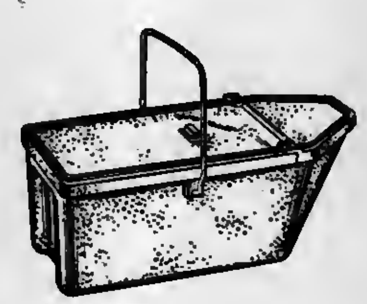

261,605
CHARCOAL SCUTTLE
Thomas E. Wright, 6340 Americana Dr., Clarendon Hills, Ill. 60514
Filed Feb. 11, 1980, Ser. No. 120,135
Term of patent 14 years
Int. Cl. D7—*08*
U.S. Cl. D7—212

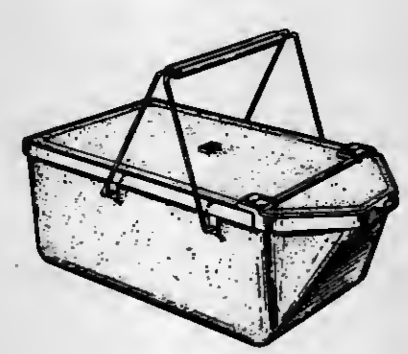

261,606
WHEEL HUB LOCKING TOOL
Mark J. La Fargo, 5127 Muscatel, and Robert V. Pomponio, 1040 E. Las Tunas Dr., both of San Gabriel, Calif. 91776
Filed Aug. 24, 1978, Ser. No. 919,391
Term of patent 14 years
Int. Cl. D8—*05*
U.S. Cl. D8—21

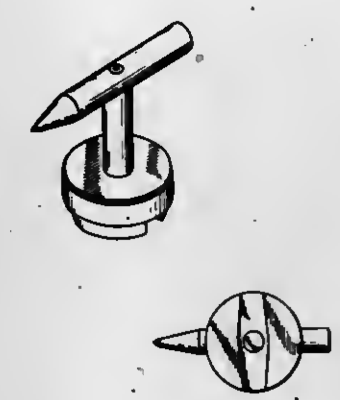

261,607
RATCHET WRENCH FULCRUM RING
Robert V. Albertson, 2100 Shadywood Rd., Wayzata, Minn. 55391
Filed Nov. 21, 1977, Ser. No. 853,642
Term of patent 14 years
Int. Cl. D8—*05*
U.S. Cl. D8—25

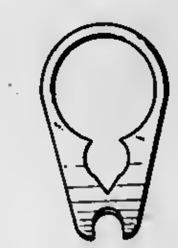

261,608
PUMP FLANGE TOOL
Carl F. Gunnell, III, 2965 Wilson Ave., Oakton, Va. 22124
Filed Dec. 6, 1978, Ser. No. 967,155
Term of patent 14 years
Int. Cl. D08—*05*
U.S. Cl. D8—27

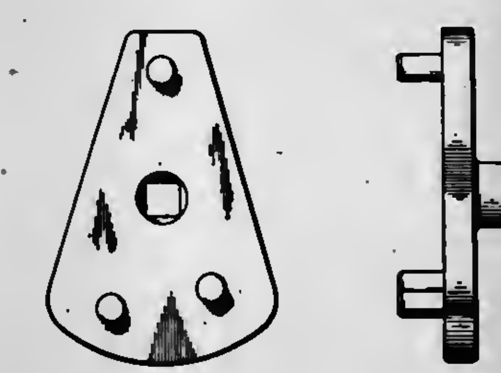

261,609
VISE
Pierre Roux, 43, Allee Du Mens, Villeurbane, France (69609)
Filed May 2, 1979, Ser. No. 35,400
Term of patent 14 years
Int. Cl. D8—*05*
U.S. Cl. D8—74

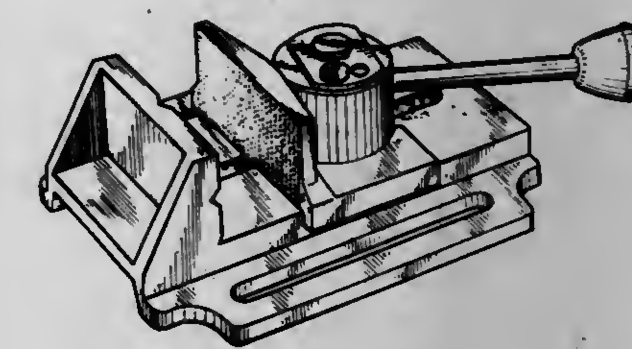

261,610
HAND IMPLEMENT
Robert W. Fee; Richard E. Ten Eyck, both of Wichita, and Lloyd T. Smith, Newton, all of Kans., assignors to S/V Tool Company, Inc., Newton, Kans.
Filed Oct. 18, 1979, Ser. No. 86,088
Term of patent 14 years
Int. Cl. D8—*04*
U.S. Cl. D8—82

261,611
LOAD BINDER RELEASE TOOL
Thomas L. Brannock, Rte. 9, Box 575-D, Avra Valley, Ariz. 85704
Filed Aug. 20, 1979, Ser. No. 67,833
Term of patent 14 years
Int. Cl. D8—*05*
U.S. Cl. D8—89

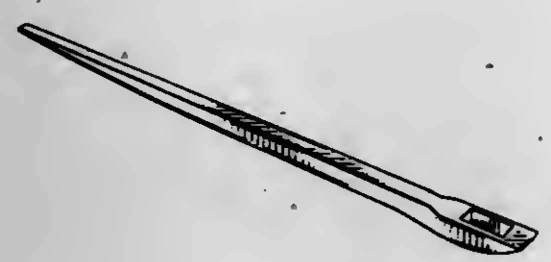

261,612
COMBINED RULER AND LETTER OPENER
Walter Henkels, Hoiunderweg 1, 5142 Hückelhoven, Fed. Rep. of Germany
Filed Aug. 13, 1979, Ser. No. 65,971
Claims priority, application Fed. Rep. of Germany, Mar. 2, 1979, MR 121
Term of patent 14 years
Int. Cl. D8—*03*
U.S. Cl. D8—104

261,613
BOTTLED ALCOHOLIC BEVERAGE CARTON
Hampton E. Forbes, Jr., Wilmington, Del., assignor to Westvaco Corporation, New York, N.Y.
Filed Jun. 20, 1978, Ser. No. 917,299
Term of patent 14 years
Int. Cl. D9—*03*
U.S. Cl. D9—418

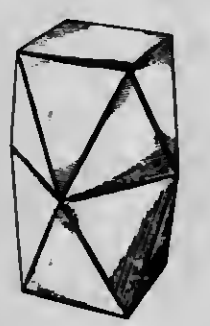

261,614
PLAYING CARD BOX
Gregory J. Vallone, 9950 Delco, Chatsworth, Calif. 91311
Filed Aug. 30, 1979, Ser. No. 70,963
Term of patent 14 years
Int. Cl. D9—*03*
U.S. Cl. D9—311

261,615
PERFUME BOTTLE
Albert Kaufmann, Geneva, Switzerland, assignor to Interdica S.A., Villars-sur-Glane, Switzerland
Filed Mar. 19, 1979, Ser. No. 22,076
Term of patent 14 years
Int. Cl. D9—*01*
U.S. Cl. D9—337

261,616
COMBINED DISPLAY AND PACKAGING CONTAINER
Robert J. Tesar, and Robert E. Gannon, both of Pineville, N.C., assignors to Rexham Corporation, Pineville, N.C.
Filed Sep. 10, 1979, Ser. No. 73,619
Term of patent 14 years
Int. Cl. D9—*03*
U.S. Cl. D9—415

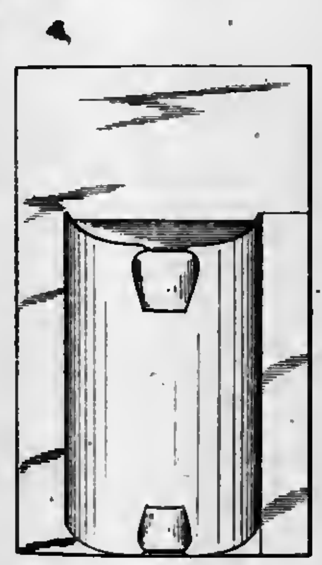

261,617
CARTON
John J. Austin, Jr., Hinsdale, Ill., assignor to Champion International Corporation, Stamford, Conn.
Filed Feb. 1, 1979, Ser. No. 8,800
Term of patent 14 years
Int. Cl. D9—*03*
U.S. Cl. D9—432

261,618
ARTICLE CARRIER BLANK
James R. Oliff, Austell, and Richard K. Watkins, Lithonia, both of Ga., assignors to The Mead Corporation, Dayton, Ohio
Filed Apr. 9, 1979, Ser. No. 28,540
Term of patent 14 years
Int. Cl. D9—*03*
U.S. Cl. D9—433

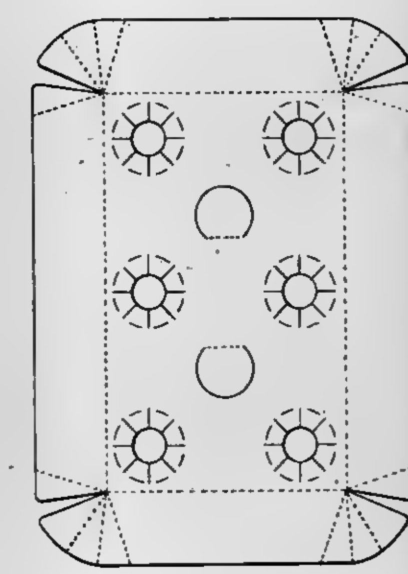

261,619
COMBINED BOTTLE CAP AND CAPSULE PIERCING DEVICE
Florence Borkan, South Orange, N.J., assignor to Pharmacaps, Inc., Elizabeth, N.J.
Division of Ser. No. 808,885, Jun. 22, 1977. This application Dec. 17, 1979, Ser. No. 104,378
Term of patent 14 years
Int. Cl. D09—*07*
U.S. Cl. D9—437

261,620
CONTAINER COVER
Raymond G. Scott, Oak Brook, and Lawrence S. Wysocki, Chicago, both of Ill., assignors to Champion International Corporation, Stamford, Conn.
Filed Dec. 21, 1978, Ser. No. 971,951
Term of patent 14 years
Int. Cl. D09—*99*
U.S. Cl. D9—438

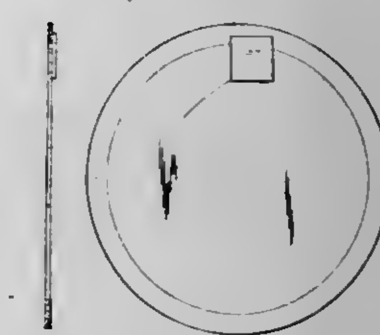

261,621
SUTURE PACKAGING ELEMENT
Luther A. Hoffman, Sinking Spring, Pa., assignor to Sharpoint Inc., Mohnton, Pa.
Filed Sep. 13, 1979, Ser. No. 75,224
Term of patent 14 years
Int. Cl. D9—*99*
U.S. Cl. D9—456

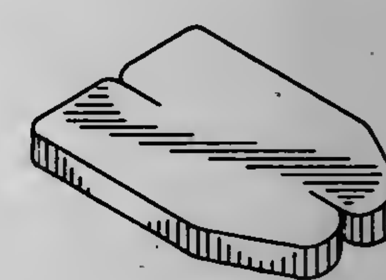

261,622
CLOCK
David A. Marquez, and Perfecto J. Marquez, both of 426 E. Main St., Stockton, Calif. 95202
Filed Nov. 23, 1979, Ser. No. 97,002
Term of patent 14 years
Int. Cl. D10—*01*
U.S. Cl. D10—6

261,623
REFLECTANCE COLORIMETER
Kenneth D. Collister, Elkhart; Michael A. Krou, South Bend, and Raymond M. Werner, Elkhart, all of Ind., assignors to Miles Laboratories, Inc., Elkhart, Ind.
Filed Aug. 3, 1979, Ser. No. 63,198
Term of patent 14 years
Int. Cl. D10—*04*
U.S. Cl. D10—46

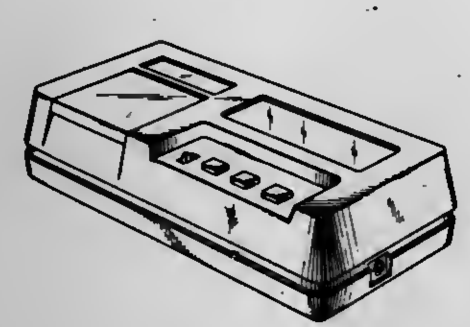

261,624
THREE-DIMENSIONAL COORDINATE MEASURING INSTRUMENT
Katsuhito Fukano, and Yukio Mawake, both of Tochigi, Japan, assignors to Mitutoyo Mfg., Co., Ltd., Tokyo, Japan
Filed Nov. 6, 1979, Ser. No. 92,059
Claims priority, application Japan, May 10, 1979, 54-19052
Term of patent 14 years
Int. Cl. D10—*04*
U.S. Cl. D10—46

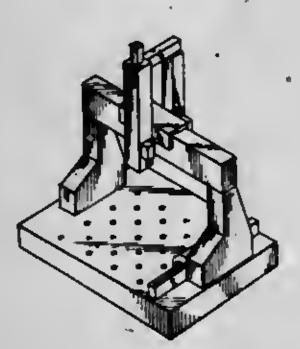

261,625
ANGLE CONVERTER
Robert J. Farino, R.D. #2, Box 152, Barnesboro, Pa. 15714
Filed Dec. 7, 1979, Ser. No. 101,161
Term of patent 14 years
Int. Cl. D10—*04*
U.S. Cl. D10—65

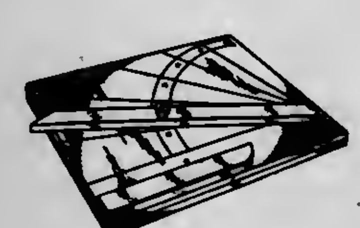

261,626
CORNER LEVEL
Robert H. VanderWerf, 1621 Livona La., P.O. Box 4333, Redding, Calif. 96001
Filed Oct. 24, 1979, Ser. No. 88,215
Term of patent 14 years
Int. Cl. D10—*04*
U.S. Cl. D10—69

261,627
VOLT-OHM-AMMETER OR THE LIKE
Takeo Kuramoto, Tokyo, Japan, assignor to Kyoritsu Electrical Instruments Works, Ltd., Tokyo, Japan
Filed Sep. 10, 1979, Ser. No. 73,957
Term of patent 14 years
Int. Cl. D10—*04*
U.S. Cl. D10—79

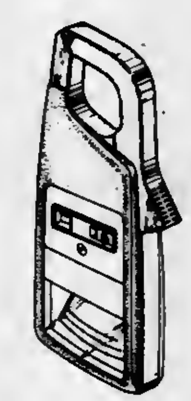

261,628
ALARM SYSTEM CONTROL UNIT
Daniel D. Schaeffer, 423A San Vincente Blvd., Santa Monica, Calif. 90402
Filed Aug. 16, 1978, Ser. No. 934,000
Term of patent 14 years
Int. Cl. D10—*05*
U.S. Cl. D10—106

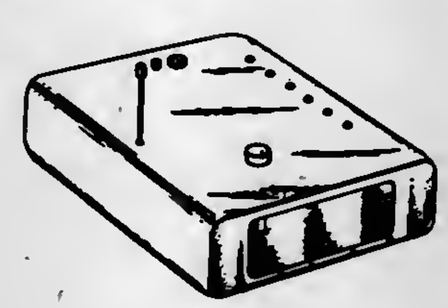

261,629
EMERGENCY BRAKE WARNING DEVICE
Kevin L. Doheny, Tustin, Calif., assignor to Docan Corporation, Beverly Hills, Calif.
Filed Jun. 1, 1979, Ser. No. 44,597
Term of patent 14 years
Int. Cl. D10—*05*
U.S. Cl. D10—106

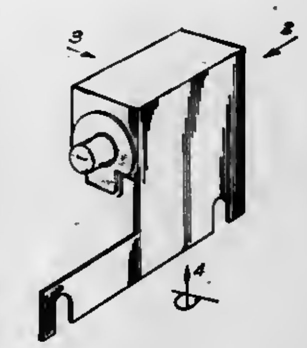

261,630
BELT MOUNTED REMOTE RADIO TRANSMITTER FOR SIGNALLING AN OPERATOR OF HEAVY EQUIPMENT
Bernd U. Luwe, Scarborough, Canada, assignor to Motorola, Inc., Schaumburg, Ill.
Filed Dec. 18, 1978, Ser. No. 970,422
Term of patent 14 years
Int. Cl. D10—*06*; D14—*03*
U.S. Cl. D10—121

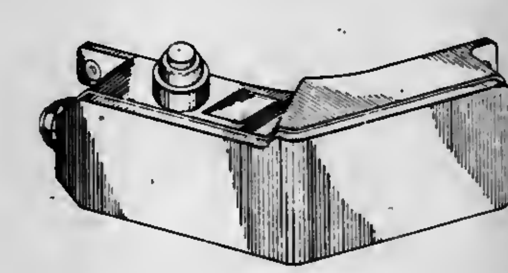

261,631
STATUETTE
David Immel, 4702 S. Ferdinand, Seattle, Wash. 98118
Filed Aug. 6, 1979, Ser. No. 63,913
Term of patent 14 years
Int. Cl. D11—*02*
U.S. Cl. D11—131

261,632
BOWLING TROPHY
Gerald E. Karkanen, 1099 Monroe St., Shakopee, Minn. 55379
Filed Apr. 26, 1979, Ser. No. 34,161
Term of patent 14 years
Int. Cl. D11—*02*
U.S. Cl. D11—157

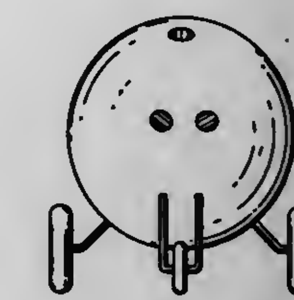

261,633
WINGED SCULPTURE
Stephen J. Gagliano, 35 Coral Ct., Malverne, N.Y. 11565
Filed Apr. 16, 1980, Ser. No. 140,952
Term of patent 14 years
Int. Cl. D11—*02*
U.S. Cl. D11—162

261,634
ROOFING ROLL DISPENSER
Terry W. Beshears, 516 Yolo St., Bryte, Calif. 95605
Filed Jun. 25, 1979, Ser. No. 51,738
Term of patent 14 years
Int. Cl. D12—*02*
U.S. Cl. D34—24

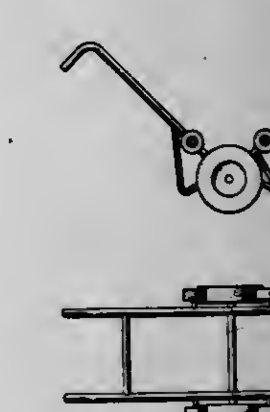

261,635
TIRE
Richard J. Skerl, Barberton, Ohio, assignor to The B. F. Goodrich Company, Akron, Ohio
Filed Nov. 27, 1978, Ser. No. 964,012
Term of patent 14 years
Int. Cl. D12—*15*
U.S. Cl. D12—147

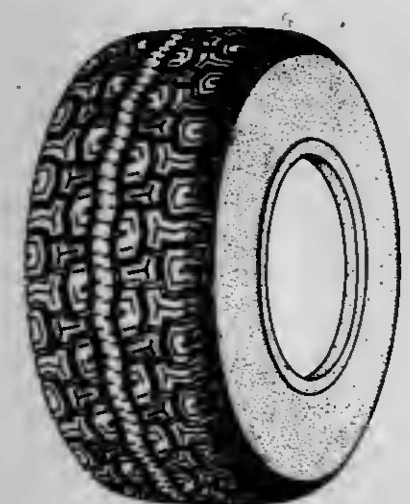

261,636
TIRE
Richard J. Skerl, Barberton, Ohio, assignor to The B. F. Goodrich Company, Akron, Ohio
Filed Feb. 4, 1980, Ser. No. 118,170
Term of patent 14 years
Int. Cl. D12—*15*
U.S. Cl. D12—147

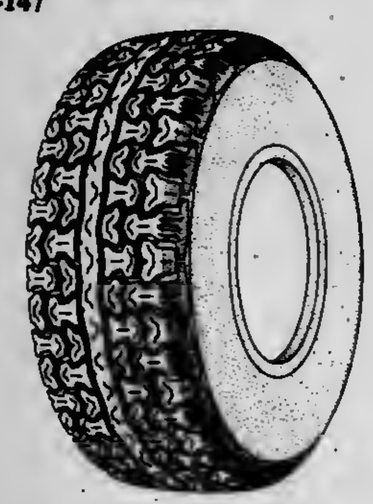

261,637
WHEEL
Russell O. Blanchard, Marshall; Joseph Guzek, Lansing, and Donald A. Matt, Bath, all of Mich., assignors to Motor Wheel Corporation, Lansing, Mich.
Filed Jan. 18, 1979, Ser. No. 4,315
Term of patent 14 years
Int. Cl. D12—*16*
U.S. Cl. D12—209

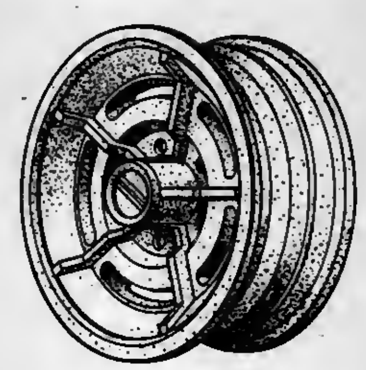

261,638
WHEEL
Russell O. Blanchard, Marshall; Joseph Guzek, Lansing, and Donald A. Matt, Bath, all of Mich., assignors to Motor Wheel Corporation, Lansing, Mich.
Filed Jan. 18, 1979, Ser. No. 4,349
Term of patent 14 years
Int. Cl. D12—*16*
U.S. Cl. D12—209

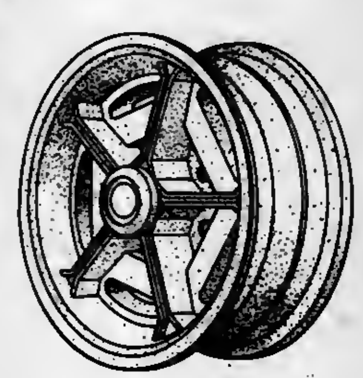

261,639
WATER-DRIVEN ELECTRICITY GENERATOR
Alan J. Robinson, 12 Trevi St., Jindalee, Queensland, 4074, Australia
Filed Jul. 13, 1979, Ser. No. 57,409
Claims priority, application Australia, May 31, 1979, 78007
Term of patent 14 years
Int. Cl. D13—*01*
U.S. Cl. D13—2

261,640
COUPLING TRANSFORMER
Friedrich Alber, Köngen; Gerhard Altmann, Kirchheim; Wolfgang Bendel, Leonberg; Rudolf Dedelmahr, Aich; Hermann Eyrich, Kirchheim; Rudolf Link, Bissingen, and Klaus Seeliger, Weilheim, all of Fed. Rep. of Germany, assignors to Transormatoren Union Aktiengesellschaft, Stuttgart, Fed. Rep. of Germany
Filed Jun. 6, 1979, Ser. No. 46,059
Claims priority, application Fed. Rep. of Germany, Dec. 8, 1978, MR4971
Term of patent 14 years
Int. Cl. D13—*02*
U.S. Cl. D13—4

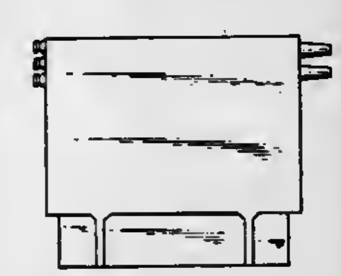

261,641
SWITCH OPERATED HAND SET FOR USE WITH TRAFFIC RADAR DEVICES OR THE LIKE
William D. Uzzell, Neosho County, Kans., assignor to Kustom Electronics, Inc., Shawnee Mission, Kans.
Filed Jan. 26, 1979, Ser. No. 6,841
Term of patent 14 years
Int. Cl. D13—*03*
U.S. Cl. D13—38

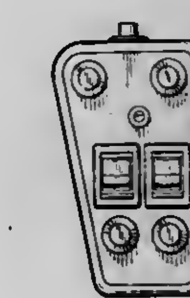

261,642
LOUDSPEAKER
Burtoo A. Babb, c/o Transrib Corp. 11562 Chairman Dr., Dallas, Tex. 75243
Filed Feb. 22, 1979, Ser. No. 14,064
Term of patent 14 years
Int. Cl. D14—*01*
U.S. Cl. D14—30

261,643
COMBINED CASSETTE RECORDER, RADIO AND TELEVISION
Yasusuke Seki, and Takeshi Abe, both of Tokyo, Japan, assignors to Hitachi, Ltd., Tokyo, Japan
Filed Dec. 5, 1979, Ser. No. 100,361
Claims priority, application Japan, Jun. 15, 1979, 54-24536
Term of patent 14 years
Int. Cl. D14—*018, 03*
U.S. Cl. D14—5

261,644
MEMORY MODULE HOUSING
Kevin P. McKinsey, Scotts Valley, and James C. Asher, San Jose, both of Calif., assignors to Atari, Inc., Sunnyvale, Calif.
Filed Mar. 22, 1979, Ser. No. 22,572
Term of patent 14 years
Int. Cl. D14—*01*; D16—*99*
U.S. Cl. D14—11

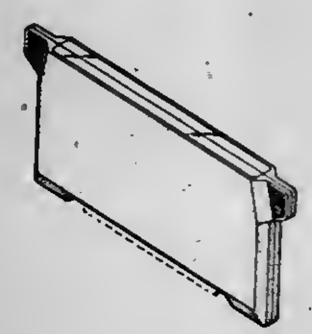

261,645
LOUDSPEAKER
Burton A. Babb, c/o Transrib Corp. 11562 Chairman Dr., Dallas, Tex. 75243
Filed Feb. 22, 1979, Ser. No. 14,033
Term of patent 14 years
Int. Cl. D14—*01*
U.S. Cl. D14—30

261,646
SHEET FEEDER
Loren D. Stirling, Pleasanton, Calif., assignor to Qume Corporation, San Jose, Calif.
Filed Apr. 18, 1978, Ser. No. 897,658
Term of patent 14 years
Int. Cl. D14—*02*
U.S. Cl. D14—114

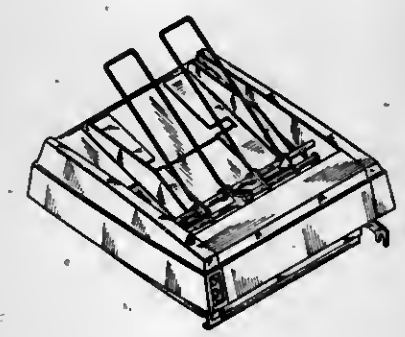

261,647
TELEPHONE
Wesley L. Thomas, 109 S. Catalina St., Los Angeles, Calif. 90004
Filed May 7, 1979, Ser. No. 36,586
Term of patent 14 years
Int. Cl. D14—*03*
U.S. Cl. D14—53

261,648
TELEPHONE
Wesley L. Thomas, 109 S. Catalina St., Los Angeles, Calif. 90004
Filed May 18, 1979, Ser. No. 40,196
Term of patent 14 years
Int. Cl. D14—*03*
U.S. Cl. D14—53

261,649
TELEPHONE
Wesley L. Thomas, 109 S. Catalina St., Los Angeles, Calif. 90004
Filed Jul. 13, 1979, Ser. No. 57,276
Term of patent 14 years
Int. Cl. D14—*03*
U.S. Cl. D14—53

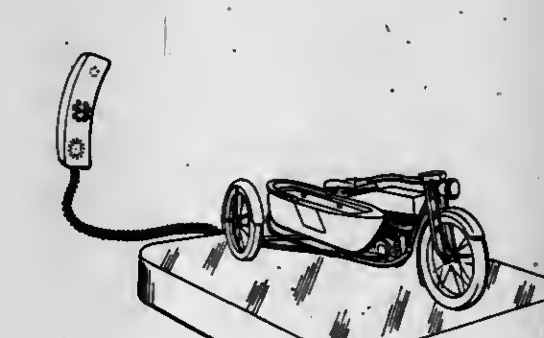

261,650
CLOCK RADIO RECEIVER
Peter H. J. van de Ven, Valkenswaard, Netherlands, assignor to U.S. Philips Corporation, New York, N.Y.
Filed Aug. 30, 1979, Ser. No. 71,219
Claims priority, application United Kingdom, Mar. 8, 1979, 988.924/79
Term of patent 14 years
Int. Cl. D14—*03*
U.S. Cl. D14—70

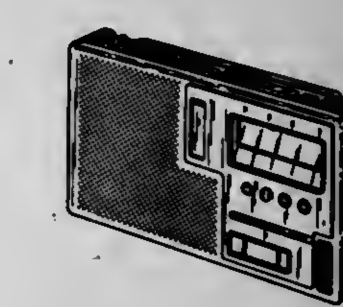

261,651
CLOCK RADIO OR SIMILAR ARTICLE
John S. Kolwaite, DeWitt, N.Y., assignor to General Electric Company, New York, N.Y.
Filed Jul. 25, 1979, Ser. No. 60,809
Term of patent 14 years
Int. Cl. D14—*03*; D10—*01*
U.S. Cl. D14—73

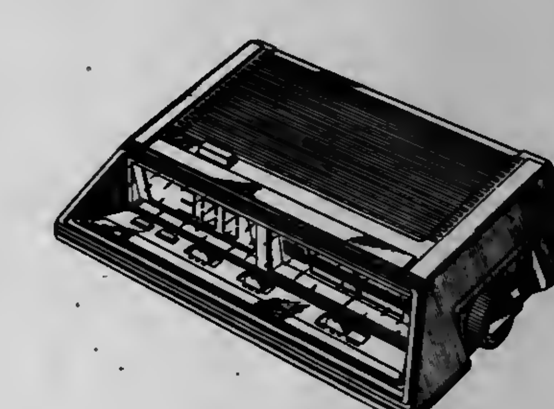

261,652
POWER CONSOLE
Robert L. Deschamps, Wheaton, Ill., assignor to Shure Brothers, Inc., Evanston, Ill.
Filed Aug. 17, 1979, Ser. No. 67,523
Term of patent 14 years
Int. Cl. D14—*03*
U.S. Cl. D14—96

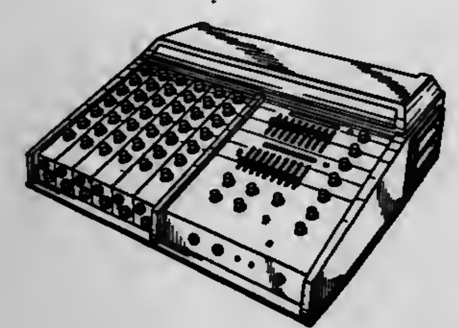

261,653
SORTING APPARATUS
Frederick J. Lawrence, Tustin, Calif., assignor to Nashua Corporation, Nashua, N.H.
Filed Sep. 18, 1978, Ser. No. 944,330
Term of patent 14 years
Int. Cl. D14—*02*
U.S. Cl. D14—110

261,654
MOUNTING STAND FOR ATTACHING AN ACCESSORY TO AN ENGINE
James J. Feuling, 686 Ash Ave., Chula Vista, Calif. 92010
Filed Nov. 9, 1978, Ser. No. 959,433
Term of patent 14 years
Int. Cl. D15—*01*
U.S. Cl. D15—5

261,655
HEAD FOR A SWIMMING POOL CLEANER
Andrew L. Pansini, 200 Golden Gate Ave., Belvedere, Calif. 94920
Filed Nov. 23, 1979, Ser. No. 96,627
Term of patent 14 years
Int. Cl. D15—*05*
U.S. Cl. D32—32

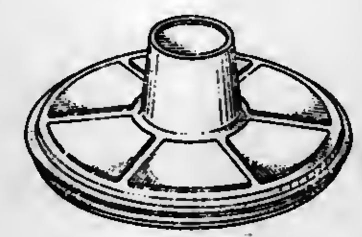

261,656
DISPENSER FOR LOZENGES
Thure Svensson, Habo, and Jan Brandstrom, Degeberga, both of Sweden, assignors to Aktiebolaget Cloetta, Ljungsbro, Sweden
Filed Oct. 15, 1979, Ser. No. 84,659
Claims priority, application Sweden, Apr. 20, 1979, 791013
Term of patent 14 years
Int. Cl. D15—*99*
U.S. Cl. D15—111

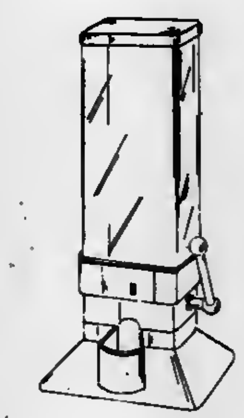

261,657
GLASS FILLER
Joseph N. Villa, Freehold, N.J., assignor to Standard-Keil Hardware Manufacturing Co., Del.
Filed Jan. 17, 1980, Ser. No. 112,889
Term of patent 14 years
Int. Cl. D23—*01*
U.S. Cl. D15—118

261,658
GARBAGE COMPACTOR
Hans Bachmann, Rigiweg 22, 4800 Zofingen, Switzerland
Filed Jul. 6, 1979, Ser. No. 55,421
Term of patent 14 years
Int. Cl. D15—*09*
U.S. Cl. D15—123

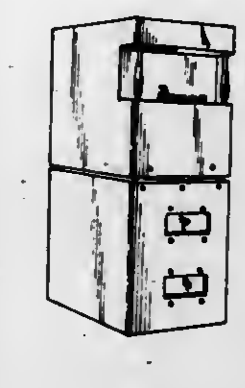

261,659
ELECTROPHOTOGRAPHIC COPIER
Michio Imada, Tokyo Kodaira, Japan, assignor to Olympus Optical Company Ltd., Tokyo, Japan
Filed Feb. 7, 1979, Ser. No. 10,078
Claims priority, application Japan, Sep. 18, 1978, 53-39559
Term of patent 14 years
Int. Cl. D16—*03*
U.S. Cl. D16—31

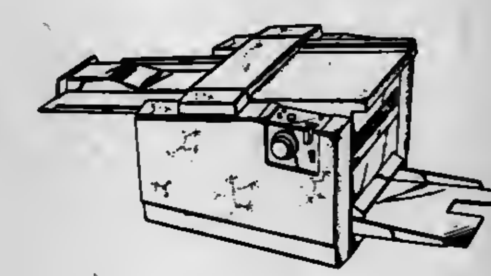

261,660
PHOTOPRINTING MACHINE
Jess Forrest, Bedford, and Carl D. Hardy, Medfield, both of Mass., assignors to Coulter Systems Corporation, Bedford, Mass.
Filed Aug. 10, 1979, Ser. No. 65,718
Term of patent 14 years
Int. Cl. D16—*03*
U.S. Cl. D16—31

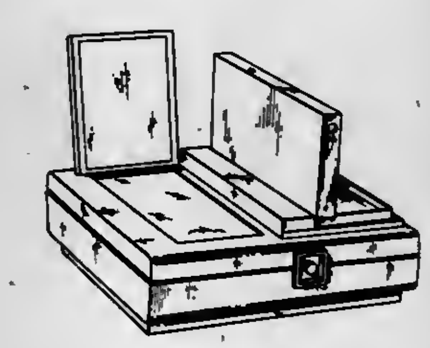

261,661
COPYING MACHINE
Terrence D. Charland, Pittsford; Dean R. Newcomb, Macedon, and Donald A. Robertson, Fairport, all of N.Y., assignors to Xerox Corporation, Stamford, Conn.
Filed Sep. 13, 1979, Ser. No. 75,388
Term of patent 14 years
Int. Cl. D16—*03*
U.S. Cl. D16—31

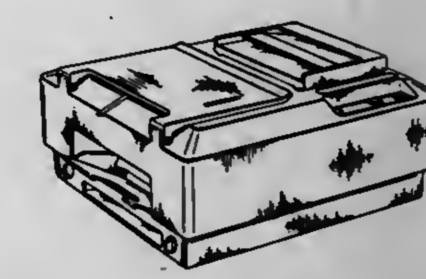

261,662
EYEGLASSES
Bernice Bedwell, Rte. 2, Box 321H, Midlothian, Tex. 76065
Filed Apr. 28, 1980, Ser. No. 144,239
Term of patent 14 years
Int. Cl. D16—*06*
U.S. Cl. D16—104

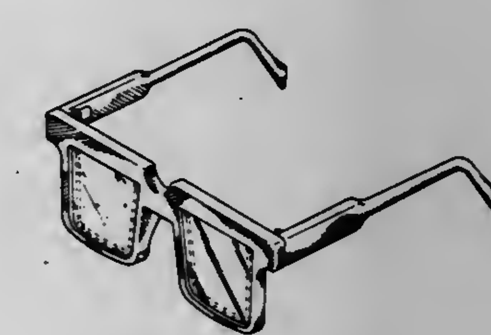

261,663
WIND INSTRUMENT
Frank H. Lawson, 1608 Trona Way, San Jose, Calif. 95125
Filed Mar. 24, 1980, Ser. No. 132,853
Term of patent 14 years
Int. Cl. D17—*02*
U.S. Cl. D17—10

261,664
COIN SEPARATOR ASSEMBLY
Rex M. Maloy, Broken Arrow, Okla., assignor to Orin W. Coburn, Muskogee, Okla.
Filed Jul. 7, 1980, Ser. No. 166,531
Term of patent 14 years
Int. Cl. D20—*99*
U.S. Cl. D18—3

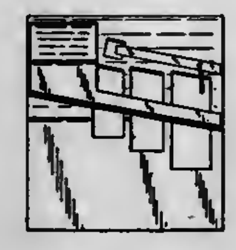

261,665
DESK PEN SET HOLDER
Elsa L. Delgado, 187 NW. 51 Ave., Miami, Fla. 33126, and Julia M. Pinera, 260 SW. 10 St., #3, Miami, Fla. 33130
Filed Nov. 13, 1978, Ser. No. 960,288
Term of patent 14 years
Int. Cl. D19—*02*
U.S. Cl. D19—77

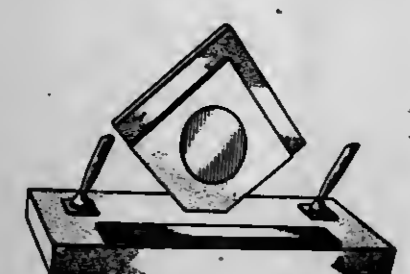

261,666
BACKGAMMON CALCULATOR
Andrei Sorin, Ste. 1107, 7 St. Denis Dr., North York (Don Mills), Ontario, Canada (M5C 1E5)
Filed Jul. 3, 1979, Ser. No. 54,586
Claims priority, application Canada, Mar. 14, 1979, 1403794
Term of patent 14 years
Int. Cl. D21—*01*
U.S. Cl. D21—13

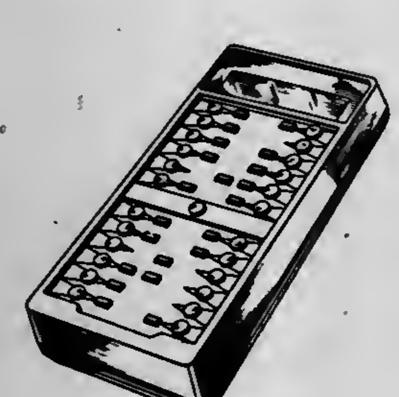

261,667
HOCKEY TARGET
Denis O. Griggs, 102 Spire Hillway, Willowdale, Ontario, Canada (M2H 3A6)
Filed Feb. 15, 1979, Ser. No. 12,541
Claims priority, application Canada, Aug. 15, 1978, 1508781
Term of patent 14 years
Int. Cl. D21—*01*
U.S. Cl. D21—6

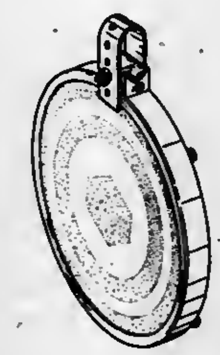

261,668
COMBINED HOLDER AND TRANSFER TRAY FOR BANK CHECKS
Elmer E. Ogg, Jr., and George F. Brun, Jr., both of Dayton, Ohio, assignors to New Balance Unlimited, Dayton, Ohio
Filed Feb. 13, 1980, Ser. No. 121,279
Term of patent 14 years
Int. Cl. D19—*02*
U.S. Cl. D19—92

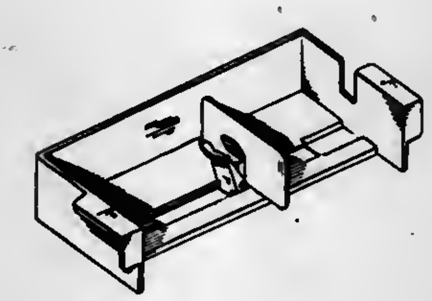

261,669
ELECTRONIC GAME HOUSING OR SIMILAR ARTICLE
Luan G. Tran, Redondo Beach, and Edward Mayer, Los Angeles, both of Calif., assignors to Mattel, Inc., Hawthorne, Calif.
Filed Jan. 21, 1980, Ser. No. 113,949
Term of patent 14 years
Int. Cl. D21—*01*
U.S. Cl. D21—13

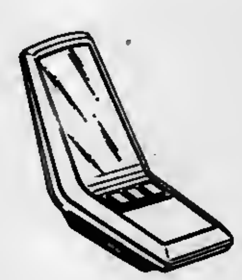

261,670
TOY CALLIOPE OR SIMILAR ARTICLE
John M. Melzian, Palos Verdes Estates; Aaron G. Cohen, Los Angeles, and Mike Nuttall, South Pasadena, all of Calif., assignors to Mattel, Inc., Hawthorne, Calif.
Filed Mar. 5, 1979, Ser. No. 17,225
Term of patent 14 years
Int. Cl. D21—*01*
U.S. Cl. D21—64

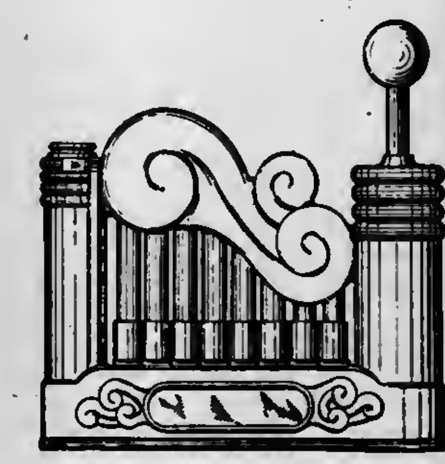

261,671
TOY PLAY CASE OR SIMILAR ARTICLE
James R. Livesey, Fountain Valley, Calif., assignor to Mattel, Inc., Hawthorne, Calif.
Filed May 21, 1979, Ser. No. 17,223
Term of patent 14 years
Int. Cl. D3—*01*; D21—*01*
U.S. Cl. D21—109

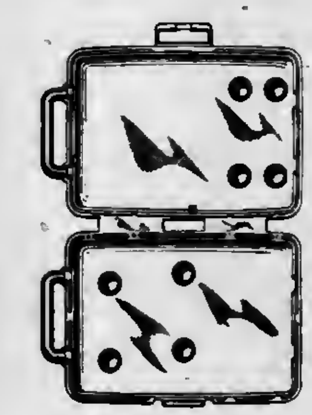

261,672
MODEL RACING CAR
Maurice P. Phillippe, Woking, England, assignor to Tyrrell Racing Organisation Limited, Surrey, England
Filed May 16, 1978, Ser. No. 906,765
Claims priority, application United Kingdom, Nov. 16, 1977, 982294/77
Term of patent 14 years
Int. Cl. D21—*01*
U.S. Cl. D21—137

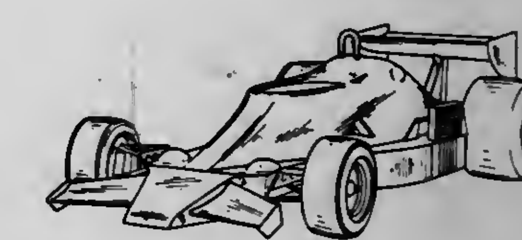

261,673
FISHING LURE
George S. Perrin, Fort Smith, Ark., assignor to Plastic Research & Development Corp., Fort Smith, Ark.
Filed Apr. 1, 1980, Ser. No. 136,282
Term of patent 14 years
Int. Cl. D22—*05*
U.S. Cl. D22—27

261,674
EXTENSION FOR GASOLINE DISPENSING NOZZLE
Gerald W. Nice, P.O. Box 57, Annabella, Utah 84711
Filed May 7, 1979, Ser. No. 36,599
Term of patent 14 years
Int. Cl. D23—*01*
U.S. Cl. D23—37

261,675
SPACE HEATING STOVE
John H. Bane, III, 403 N. Maple Ave., Brunswick, Md. 21716
Continuation of Ser. No. 956,079, Oct. 30, 1978. This application Jul. 25, 1980, Ser. No. 172,479
Term of patent 14 years
Int. Cl. D23—*03*
U.S. Cl. D23—97

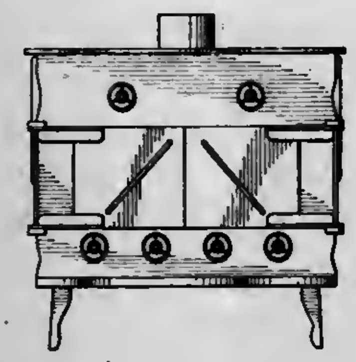

261,676
COMPACT OXYGEN CONCENTRATOR
Norman R. McCombs, Tonawanda, N.Y., assignor to Greene & Kellogg, Inc., Tonawanda, N.Y.
Filed May 14, 1979, Ser. No. 38,956
Term of patent 14 years
Int. Cl. D24—*02*
U.S. Cl. D24—8

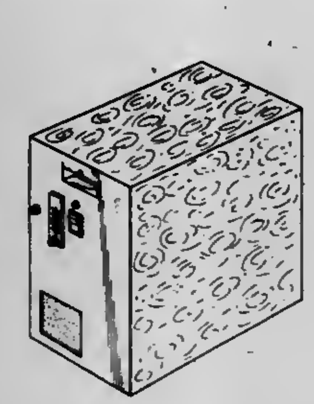

261,677
EVACUATOR TIP
Michael J. Neeley, 3065 Josey La., Ste. 6, Carrollton, Tex. 75006
Filed Jan. 8, 1979, Ser. No. 1,773
Term of patent 14 years
Int. Cl. D24—*02*
U.S. Cl. D24—10

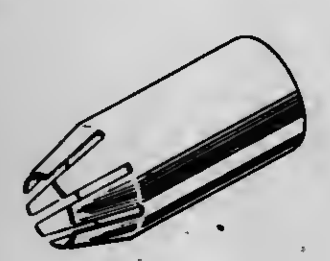

261,678
ELECTROLYSIS HAIR REMOVAL APPARATUS
Samuel J. Mann, Englewood, N.J., assignor to Inverness International, Englewood, N.J.
Filed Aug. 30, 1979, Ser. No. 70,768
Term of patent 14 years
Int. Cl. D24—*02*
U.S. Cl. D24—26

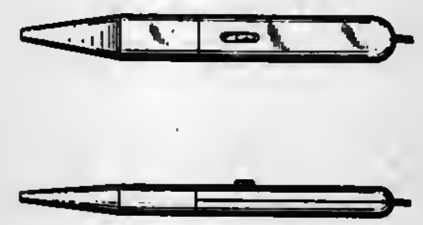

261,679
CASE FOR CHIROPRACTIC VIBRATOR
Edward D. Noble, 29 Havenbrook Blvd., Willowdale, Ontario, Canada (M2J 1A3)
Filed Oct. 20, 1978, Ser. No. 962,449
Term of patent 14 years
Int. Cl. D28—*03*
U.S. Cl. D24—41

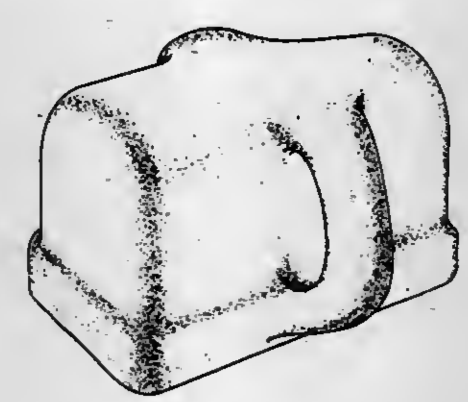

261,680
NASO-GASTRIC TUBE STABILIZER
Richard W. Hall, New Canaan, Conn., assignor to Technalytics, Inc., N.J.
Filed May 23, 1980, Ser. No. 152,686
Term of patent 14 years
Int. Cl. D24—*02*
U.S. Cl. D24—53

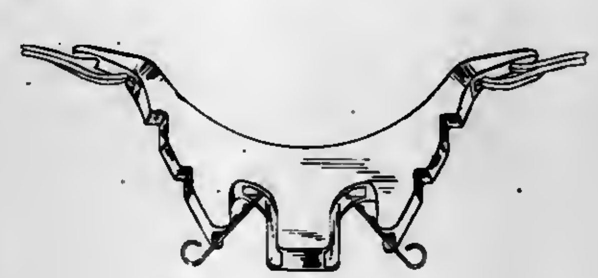

261,681
ORTHOPEDIC PILLOW
John W. Chandler, 3121 E. 25th St., Minneapolis, Minn. 55406
Filed Jun. 7, 1979, Ser. No. 46,471
Term of patent 14 years
Int. Cl. D24—*04*
U.S. Cl. D24—64

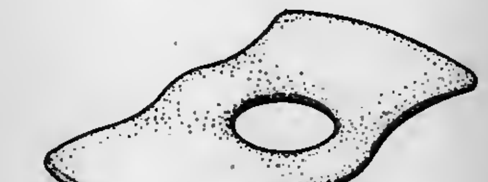

261,682
DENSITY MEASUREMENT ENCLOSURE FOR THE HUMAN BODY
Sidney H. Hoover, Woodside, Calif., assignor to Honex Corporation, Woodside, Calif.
Filed Sep. 13, 1979, Ser. No. 75,128
Term of patent 14 years
Int. Cl. D25—*04*
U.S. Cl. D25—16

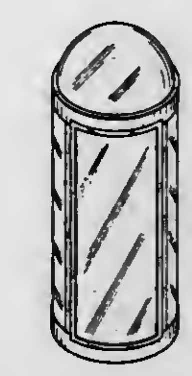

261,683
LINEAR MULTILAMP PHOTOFLASH UNIT
Emery G. Audesse, Beverly, Mass., and Donald W. Hartman, Williamsport, Pa., assignors to GTE Products Corporation, Stamford, Conn.
Filed Sep. 4, 1979, Ser. No. 72,400
Term of patent 14 years
Int. Cl. D16—*05*
U.S. Cl. D26—2

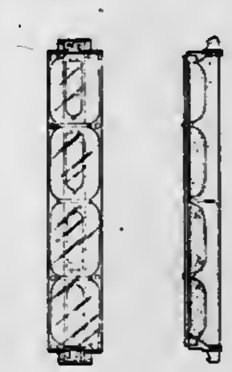

261,684
UTILITY LIGHT
Duane E. Westover, 113 E. Rhondda, Lot 18, Andover, Kans. 67002
Filed Jun. 18, 1979, Ser. No. 49,951
Term of patent 14 years
Int. Cl. D26—*05*
U.S. Cl. D26—63

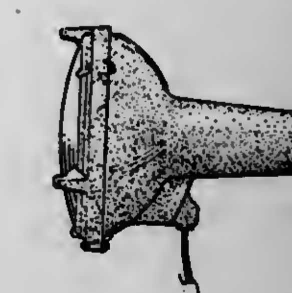

261,685
WALL LAMP
Donald A. Kvasnicka, 718 N. Logan, Colorado Springs, Colo. 80909
Filed Apr. 18, 1979, Ser. No. 31,123
Term of patent 14 years
Int. Cl. D26—*05*
U.S. Cl. D26—87

261,686
TABLE LAMP
Donald A. Kvasnicka, 718 N. Logan, Colorado Springs, Colo. 80909
Filed Apr. 18, 1979, Ser. No. 31,121
Term of patent 14 years
Int. Cl. D26—*05*
U.S. Cl. D26—93

261,687
TABLE LAMP
Donald A. Kvasnicka, 718 N. Logan, Colorado Springs, Colo. 80909
Filed Apr. 18, 1979, Ser. No. 31,124
Term of patent 14 years
Int. Cl. D26—*05*
U.S. Cl. D26—93

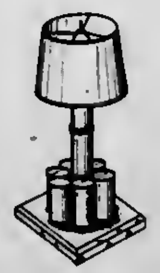

261,688
FLOOR LAMP
Donald A. Kvasnicka, 718 N. Logan, Colorado Springs, Colo. 80909
Filed Apr. 18, 1979, Ser. No. 31,117
Term of patent 14 years
Int. Cl. D26—*05*
U.S. Cl. D26—102

261,689
COMBINED PIPE AND STAND THEREFOR
Stephen Weglein, Los Angeles, Calif., assignor to Toke International, Inc., Marina Del Rey, Calif.
Filed Apr. 11, 1979, Ser. No. 29,701
Term of patent 7 years
Int. Cl. D27—*02*
U.S. Cl. D27—3

261,690
SMOKING PIPE
Joseph E. Murray, Jr., 27 Alpine St., #14, Malden, Mass. 02148
Filed May 14, 1979, Ser. No. 38,463
Term of patent 14 years
Int. Cl. D27—*02*
U.S. Cl. D27—3

261,691
SOAP OR DETERGENT TABLET
Anthony S. Abraham, Stanmore, England, assignor to Lever Brothers Company, New York, N.Y.
Filed Sep. 5, 1979, Ser. No. 72,853
Claims priority, application United Kingdom, Mar. 7, 1979, 988895/79
Term of patent 14 years
Int. Cl. D28—*03*
U.S. Cl. D28—8.1

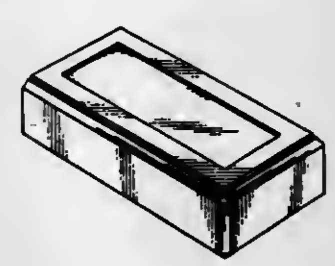

261,692
CURLING IRON
Josephine A. O'Brien, 147 S. 5th St., St. Charles, Mo. 63301
Filed Jan. 29, 1980, Ser. No. 116,483
Term of patent 14 years
Int. Cl. D28—*03*
U.S. Cl. D28—35

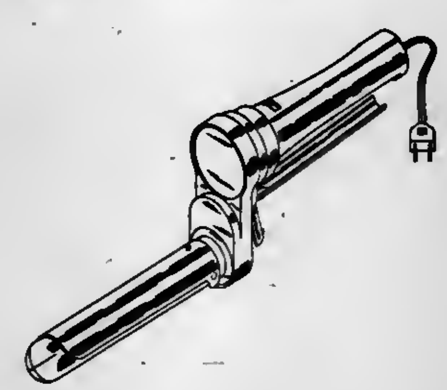

261,693
COMBINED BRUSH AND MIRROR
John deHaseth, Whittier, Calif., assignor to Jonee, Inc., Santa Fe Springs, Calif.
Filed Jul. 23, 1979, Ser. No. 59,603
Term of patent 14 years
Int. Cl. D28—*03*
U.S. Cl. D28—68

261,694
CURTAIN MATERIAL
Hans Stöcker, Wil, Switzerland, assignor to Gardisette International AG, Luzerne, Switzerland
Filed Jan. 9, 1980, Ser. No. 110,757
Claims priority, application Fed. Rep. of Germany, Jul. 10, 1979, 752
Term of patent 14 years
Int. Cl. D5—*05*
U.S. Cl. D47—6 E

LIST OF PATENTEES

TO WHOM

PATENTS WERE ISSUED ON THE 3RD DAY OF NOVEMBER, 1981

NOTE.—Arranged in accordance with the first significant character or word of the name (in accordance with city and telephone directory practice).

AB Asea Atom: *See—*
Kinnander, Bo; Landa, Torstein; and Mansson, Ragnar, 4,298,433, Cl. 376-286.000.
Abbott Laboratories: *See—*
Ling, Chung-Mei, 4,298,593, Cl. 424-1.000.
Abbott, Robert P.; Chow, Ming-Chwan; Cirillo, Anthony J.; Drechsler, Rudolph C.; and Horney, Lee F., II, to Bell Telephone Laboratories, Incorporated. Broadcast and alternate message time slot interchanger. 4,298,977, Cl. 370-62.000.
Abbott, Seth R., to Varian Associates, Inc. Mixed phase chromatographic compositions. 4,298,500, Cl. 252-428.000.
Abe, Soichiro: *See—*
Takamura, Yoshio; Abe, Soichiro; Nakamura, Noboru; and Suzuki, Hiroyuki, 4,298,894, Cl. 358-229.000.
Abrjutin, Vladimir N.: *See—*
Bochkarev, Ellin P.; Prokopov, Igor V.; Eljutin, Alexandr V.; Belsky, Arkady A.; Baryshnikova, Svetlana M.; Nasyrov, Nail Z.; Novikov, Nikolai A.; Khairulin, Edige R.; Zvyagin, Mikhail S.; Abrjutin, Vladimir N.; Konstantinova, Ljubov I.; Ljubimova, Nina A.; and Gorbacheva, Nadezhda S., 4,298,380, Cl. 75-101.0BE.
Acker, Robert H.; Wessling, William C.; Brand, Arnold J.; and Naydan, Bob N., to Singer Company, The. Digital motor speed controller. 4,298,832, Cl. 318-318.000.
Acme-Cleveland Corporation: *See—*
Ramunas, Valdas S., 4,298,141, Cl. 221-251.000.
Acres, Stephen D.; and Kapitany, Robert A., to University of Saskatchewan. Vaccine for diarrhea caused by *E. coli*. 4,298,597, Cl. 424-92.000.
Adamowski, Andrev, to Intercontrole S.A. Method of withdrawing a mobile sensor from a heat exchanger. 4,298,054, Cl. 165-1.000.
Adams, Kenneth D., to Singer Company, The. Hook drive train for a sewing machine. 4,297,958, Cl. 112-220.000.
Addicks, Guenther: *See—*
Distler, Dieter; Mueller, Margarete; Bubam, Hans-Georg; and Addicks, Guenther, 4,298,513, Cl. 260-29.70H.
Adolfsson, Rune F. R.; and Gellert, Dietrich W., to Thorn Svenska A.B. Appliance for making an aerated beverage. 4,298,551, Cl. 261-121.00R.
Adolphi, Heinrich: *See—*
Schwarz, Gerd-Ulrich; Kiehs, Karl; Boell, Walter; and Adolphi, Heinrich, 4,298,615, Cl. 424-285.000.
Agarwal, Suresh C.: *See—*
Lange, Burkhart; Agarwal, Suresh C.; Fringeli, Werner; and Gunter, Franz, 4,298,490, Cl. 252-91.000.
Agency of Industrial Science & Technology: *See—*
Kawase, Kaoru; and Hayakawa, Kiyoshi, 4,298,698, Cl. 521-27.000.
AGFA-Gevaert Aktiengesellschaft: *See—*
Becker, Manfred; Slabik, Angela; Mucke, Bruno; Moisar, Erik; and von Rintelen, Harald, 4,298,683, Cl. 430-569.000.
AGFA-Gevaert N.V.: *See—*
Stievenart, Emile F.; and Deconinck, Hugo F., 4,298,272, Cl. 355-28.000.
Aiki, Kunio: *See—*
Tsunoda, Yoshito; Tatsuno, Kimio; Miyauchi, Toshimitsu; Aiki, Kunio; and Ito, Ryoichi, 4,298,974, Cl. 369-45.000.
Air Industrie: *See—*
Buffet, Jean, 4,297,849, Cl. 62-3.000.
Air Preheater Company, Inc., The: *See—*
Ritter, Kent E., 4,298,055, Cl. 165-9.000.
Aisan Industry Co., Ltd.: *See—*
Hayashi, Kenji, 4,298,550, Cl. 261-69.00R.
Aisin Seiki Kabushiki Kaisha: *See—*
Hayashi, Masaharu, 4,298,111, Cl. 192-58.00B.
Inada, Masami; Kitamura, Kazuhiko; Ito, Shoji: Nonoyama, Takao; and Tsuji, Riichi, 4,298,020, Cl. 137-315.000.
Kawabata, Yasuhiro, 4,297,984, Cl. 123-587.000.
Aisin-Warner K.K.: *See—*
Moroto, Shuzo; and Kobayashi, Koji, 4,298,085, Cl. 180-247.000.
Aizawa, Shirou: *See—*
Fujimori, Kuniaki; Suzuka, Teruo; Inoue, Yukio; and Aizawa, Shirou, 4,298,460, Cl. 208-121.000.
Akamatsu, Masahiko; and Uchida, Ryohei, to Mitsubishi Denki Kabushiki Kaisha. Transformer device. 4,298,838, Cl. 324-117.00R.
Aki, Osami: *See—*
Ochiai, Michihiko; Okada, Taiiti; Aki, Osami; Morimoto, Akira; Kawakita, Kenji; and Matsushita, Yoshihiro, 4,298,606, Cl. 424-246.000.
Aktiebolaget IRO: *See—*
Hellstrom, Jerker, 4,298,172, Cl. 242-47.010.
Aktiebolaget SKF: *See—*
Norlander, Gosta; Vignotto, Angelo; and Micca, Mario, 4,298,079, Cl. 175-339.000.
Aktiebolaget Svenska Flaktfabriken: *See—*
Descolas, Jean, 4,298,367, Cl. 65-4.100.
Akzo N.V.: *See—*
Cordes, Johan H.; and Roes, Wilhelmus F. M., 4,298,519, Cl. 260-33.8UA.
Akzona Incorporated: *See—*
Isselmann, Piet H., 4,298,392, Cl. 106-98.000.
Alan I. Gerald Corporation: *See—*
Kahn, Harvey R., 4,297,801, Cl. 42-59.000.
Albany International Corp.: *See—*
Davis, Robert B.; Skelton, John; Clark, Richard E.; and Swanson, Wilbur M., 4,297,749, Cl. 3-1.500.
Albatex AG: *See—*
Genini, Graziano, 4,298,031, Cl. 139-55.100.
Aldrich-Borânes, Inc.: *See—*
Brown, Herbert C., 4,298,750, Cl. 549-4.000.
Aldridge, Clyde L.; and Bearden, Roby, Jr., to Exxon Research and Engineering Company. Hydroconversion of an oil-coal mixture. 4,298,454, Cl. 208-10.000.
Alfa-Laval Separation A/S: *See—*
Hohne, Per, 4,298,162, Cl. 233-7.000.
Alkem GmbH: *See—*
Kuhn, Karl-Dieter; and Koch, Karl-Heinz, 4,298,579, Cl. 423-11.000.
Allan, John L. H.; Finestone, Arnold B.; and Roderick, John J., to El Paso Polyolefins Company. Stabilized polyolefin compositions. 4,298,521, Cl. 260-45.90R.
Allen, Harold B.: *See—*
Anderson, Lyle K.; and Allen, Harold B., 4,298,623, Cl. 426-335.000.
Allied Chemical Corporation: *See—*
DeCristofaro, Nicholas J.; Freilich, Alfred; and Nathasingh, Davidson M., 4,298,409, Cl. 148-108.000.
Gregor, John A.; and Sellers, Gregory J., 4,298,862, Cl. 340-572.000.
Allied Corporation: *See—*
Cochran, Jerry R.; Insinger, Thomas H.; Hollenbach, Gerald E.; Piskorz, Ronald F.; and Smith, Addison M., 4,298,765, Cl. 568-754.000.
Ivory, Dawn M., 4,298,348, Cl. 23-230.00R.
Prevorsek, Dusan C.; and Kwon, Young D., 4,297,878, Cl. 73-146.000.
Stables, Wilbur L.; Pendlebury, David; and Weiss, William R., 4,298,153, Cl. 226-97.000.
Allievi, Alberto, to Amia di Adolfo e Alberto Allieve & C.S.N.C. Apparatus for taking out and feeding single V-shaped strips. 4,298,302, Cl. 414-126.000.
Allingham, Yael; and Vofsi, David, to Yeda Research and Development Company, Ltd. Antifouling paints for marine use. 4,298,384, Cl. 106-18.340.
Allisbaugh, John H., to HowAll Products, Inc. Solar collector. 4,297,990, Cl. 126-445.000.
Allison, William, to B. & R. Engineering Limited. Apparatus for treating waste material. 4,297,827, Cl. 53-282.000.
Almo Manifold and Tool Company: *See—*
Courson, Richard B., 4,298,297, Cl. 411-262.000.
Alper, Yekutiel; Elkin, Itzhak; Wolf, Itzhak; Mihai, Gabriel; and Antler, Aharon, to State of Israel Ministry of Agriculture. Apparatus and method for mechanical harvesting of fruit. 4,297,832, Cl. 56-328.00R.
Alsthom-Atlantique: *See—*
Damiron, Rene; Gillet, Roger; Heuillard, Jean-Francois; and Ruelle, Gilbert, 4,298,812, Cl. 310-61.000.
Altfather, Kenneth W., Jr.: *See—*
Rees, James D.; Altfather, Kenneth W., Jr.; Lama, William L.; and Ozern, Donna U., 4,298,274, Cl. 355-71.000.
Altman, Wilbur E.; and McQuay, William C., to Altman, Wilbur E. Fish scaler with water handle. 4,297,765, Cl. 17-66.000.
Aluminum Company of America: *See—*
Rumberger, Earl E.; and Kelly, Frank M., 4,297,778, Cl. 29-426.400.
ALZA Corporation: *See—*
Theeuwes, Felix; and Cortese, Richard, 4,298,003, Cl. 128-260.000.
Amana Refrigeration, Inc.: *See—*
Bushee, Lawrence C., 4,297,987, Cl. 126-351.000.
Amano, Hisao: *See—*
Onda, Kenichi; and Amano, Hisao, 4,298,809, Cl. 307-252.00C.
Amano, Shoichi; Miyadoh, Shinji; Takahashi, Saeko; Ezaki, Norio; Niwa, Tomizo; and Yamada, Yujiro, to Meiji Seika Kaisha, Ltd.

Novel antibiotic BN-235 substance, and process for the production thereof. 4,298,599, Cl. 424-119.000.
Ambers, Paul J., to Instrumentation Laboratory Inc. Spool valve. 4,298,026, Cl. 137-625.470.
Ambrose, Richard J.: *See—*
Hergenrother, William L.; Schwarz, Richard A.; Ambrose, Richard J.; and Hayes, Robert A., 4,298,707, Cl. 521-95.000.
Amelink, Joost, to Scheepswerf Stapel B.V. Quick-coupling ball-and-socket joint. 4,298,219, Cl. 285-24.000.
American Cyanamid Company: *See—*
Floyd, Middleton B., Jr., 4,298,754, Cl. 560-121.000.
American Home Products Corporation: *See—*
Hossom, Miles G., 4,298,035, Cl. 141-1.000.
American Industrial Research: *See—*
Johnson, Raynor A.; and Barrow, Ralph M., Jr., 4,298,083, Cl. 180-125.000.
American Industries Inc.: *See—*
Carstensen, Franklin E., 4,298,112, Cl. 192-70.290.
American Safety Equipment Corporation: *See—*
Mattchen, Terry M., 4,298,074, Cl. 173-129.000.
American Standard Inc.: *See—*
Gilcher, Heinz, 4,298,179, Cl. 246-34.00R.
Ameron, Inc.: *See—*
Law, Gabriel H.; and Gysegem, Albert P., 4,298,543, Cl. 260-429.700.
AMF Incorporated: *See—*
Weiss, Arnold A., 4,297,876, Cl. 73-146.000.
Amia di Adolfo e Alberto Allieve & C.S.N.C.: *See—*
Allievi, Alberto, 4,298,302, Cl. 414-126.000.
AMP Incorporated: *See—*
Swengel, Robert C., Jr.; Fortuna, Jon A.; and Defibaugh, George R., 4,298,243, Cl. 339-276.00F.
Analogic Corporation: *See—*
Shapiro, Gerald N., 4,298,936, Cl. 364-200.000.
Anders, Dietmar; and Dienst, Manfred, to Hermann Berstorff Maschinenbau GmbH. Venting means for screw extruders. 4,298,322, Cl. 425-147.000.
Andersen, James H. Combined switch and fuse holder. 4,298,854, Cl. 337-10.000.
Anderson, Jeffrey J. Self adjustable harness or sling. 4,298,091, Cl. 182-3.000.
Anderson, Lyle K.; and Allen, Harold B. Method of preserving fresh cherries. 4,298,623, Cl. 426-335.000.
Anderson Metal Products Corp.: *See—*
Anderson, William J., 4,297,818, Cl. 52-199.000.
Anderson, Ronald B.; Caneer, Clifford, Jr.; and Maki, Terrance C., to Longyear Company. Pivoting foot clamp and mounting frame. 4,297,771, Cl. 24-263.0DA.
Anderson, William J., to Anderson Metal Products Corp. Roof ventilating louver. 4,297,818, Cl. 52-199.000.
Ando, Masato; Yamamoto, Kenji; and Taniguchi, Kazuhiro, to Electroplating Engineers of Japan, Limited. Apparatus for plating. 4,298,446, Cl. 204-224.00R.
Ando, Motoyoshi: *See—*
Ikeda, Kyoichi; and Ando, Motoyoshi, 4,297,872, Cl. 73-32.00A.
Ando, Shigeo: *See—*
Kogo, Hiroshi; Tonooka, Mamoru; Aoki, Teruhisa; Ando, Shigeo; and Tomiyama, Raiji, 4,298,965, Cl. 367-13.000.
Angehrn, Jorg A.: *See—*
Howells, Anthony P.; Diederich, Ronald E.; and Angehrn, Jorg A., 4,297,879, Cl. 73-152.000.
Anikeev, Yakov F.; Panikov, Nikolai N.; and Ripny, Viktor N. Ultrasonic flaw detector for immersion testing of articles. 4,297,886, Cl. 73-642.000.
Anthony, Andrew J.; and Groves, Malcolm D., to Combustion Engineering, Inc. Bottom mounted fuel holddown mechanism. 4,298,434, Cl. 376-364.000.
Anthony Industries, Inc.: *See—*
Weisbrod, Alvin J., 4,298,288, Cl. 366-8.000.
Antler, Aharon: *See—*
Alper, Yekutiel; Elkin, Itzhak; Wolf, Itzhak; Mihai, Gabriel; and Antler, Aharon, 4,297,832, Cl. 56-328.00R.
Antos, George J., to UOP Inc. Hydrocarbon dehydrocyclization with an acidic multimetallic catalytic composite. 4,298,462, Cl. 208-139.000.
Antos, George J., to UOP Inc. Attenuated superactive multimetallic catalytic composite. 4,298,504, Cl. 252-441.000.
Anzai, Takanori: *See—*
Honda, Akira; Anzai, Takanori; Kitamura, Minoru; Ishikawa, Masaru; and Mizuoka, Seishi, 4,298,147, Cl. 222-601.000.
Aoki, Bunya: *See—*
Oi, Nobuhiro; Aoki, Bunya; Shinozaki, Teizo; Moro, Kanji; Matsunaga, Isao; Noto, Takao; Nebashi, Toshiyuki; Harada, Yusuke; Endo, Hisao; Kimura, Takao; Okazaki, Hiroshi; Ogawa, Haruki; and Shindo, Minoru, 4,298,605, Cl. 424-246.000.
Aoki, Harumi; and Sawada, Yoshio, to Asaki Kogaku Kogyo Kabushiki Kaisha. Focus detecting device for photographic camera. 4,298,259, Cl. 354-25.000.
Aoki, Katashi. Nozzle device for molding plastics. 4,298,332, Cl. 425-570.000.
Aoki, Katashi. Stretching and blow molding of synthetic resin bottles with base cups. 4,298,567, Cl. 264-516.000.
Aoki, Teruhisa: *See—*
Kogo, Hiroshi; Tonooka, Mamoru; Aoki, Teruhisa; Ando, Shigeo; and Tomiyama, Raiji, 4,298,965, Cl. 367-13.000.
Aoki, Yoshio: *See—*
Kudo, Mitsuhiro; Otomo, Shigekazu; Ogihara, Hirotomo; and Aoki, Yoshio, 4,298,381, Cl. 75-124.000.
Appliance Design Probe Inc.: *See—*
Barradas, George, 4,298,787, Cl. 219-222.000.
Applied Technologies Associates: *See—*
Van Steenwyk, Donald H.; Cash, John R.; and Ott, Paul W., 4,297,790, Cl. 33-313.000.
Arai, Yoshio; Kataoka, Hiroyuki; Suzuki, Isao; and Yokota, Shozo, to Fuji Xerox Co., Ltd. Visual image noise eliminating system. 4,298,895, Cl. 358-284.000.
Arakawa, Hideki: *See—*
Nozaki, Takao; Ito, Takashi; Arakawa, Hideki; Ishikawa, Hajime; and Shinoda, Masaichi, 4,298,629, Cl. 427-39.000.
Arco Industries Ltd.: *See—*
D'Andrade, Bruce M., 4,297,808, Cl. 46-52.000.
ARCO Polymers, Inc.: *See—*
DiGiulio, Adolph V.; and Bauer, Jack N., 4,298,703, Cl. 521-88.000.
DiGiulio, Adolph V.; and Bauer, Jack N., 4,298,704, Cl. 521-88.000.
DiGiulio, Adolph V., 4,298,705, Cl. 521-88.000.
Argumedo, Armando J.; Brock, George W.; and Losee, Paul D., to International Business Machines Corporation. Magnetic head assembly with ferrite core. 4,298,899, Cl. 360-122.000.
Argus Chemical Corp.: *See—*
Minagawa, Motonobu; Nakahara, Yutaka; and Takahashi, Masayuki, 4,298,520, Cl. 260-45.80R.
Arima, Heihachi: *See—*
Tsuda, Hiroshi; Miyashita, Kiyoshi; Kimura, Katsuhiko; Arima, Heihachi; and Ishimoto, Osamu, 4,298,276, Cl. 355-72.000.
Armbruster, Frederick C., to Grain Processing Corporation. Low D.E. starch conversion products. 4,298,400, Cl. 127-29.000.
Armco Inc.: *See—*
Lawson, John E., 4,298,064, Cl. 166-75.00A.
Lawson, John E., 4,298,067, Cl. 166-315.000.
Armour and Company: *See—*
Orlowski, Gerald J., 4,298,326, Cl. 425-219.000.
Arn. Kiekert Soehne and Daimler-Benz Aktiengesellschaft: *See—*
Raffelsiefer, Kurt; Kurth, Herman W.; and Haberle, Fritz, 4,298,223, Cl. 292-216.000.
Arndt, Heinrich: *See—*
Bauer, Erwin; Davids, Ralf; Gotz, Gerhard; Jussen, Hilmar; Arndt, Heinrich; Kummel, Louis; Morhart, Rudolf; and Pollak-Banda, Erich, 4,297,917, Cl. 74-665.00G.
Arneson, Steven H., to Motorola, Inc. Duall-passband surface acoustic wave filter. 4,298,849, Cl. 333-193.000.
Aros Electronics AB: *See—*
Hellstrom, Jerker, 4,298,172, Cl. 242-47.010.
Arp, George F., to Heldor Associates, Inc. Reinforced molded resin pool wall. 4,297,819, Cl. 52-293.000.
Arter, Nelson K.; Devore, Ernest W.; Wills, Arthur B.; and Zelenka, Leslie R., to International Business Machines Corporation. Buffered recording. 4,298,897, Cl. 360-39.000.
Arthur D. Little, Inc.: *See—*
Sears, Barry; and Yesair, David W., 4,298,594, Cl. 424-19.000.
Artopex Inc.: *See—*
Laroche, Robert N., 4,298,236, Cl. 312-215.000.
Artzer, Richard F., to Covington Brothers Techoologies. Composite structural panel with multilayered reflective core. 4,297,820, Cl. 52-309.110.
Asada, Kazuyoshi: *See—*
Takaki, Masaoki; Sawano, Hirokazu; Yamanaka, Kunio; Asada, Kazuyoshi; Hideshima, Keiji; and Koyanagi, Haruo, 4,298,958, Cl. 364-900.000.
Asahi Glass Company, Ltd.: *See—*
Asawa, Tatsuro; Miyake, Haruhisa; Yamashita, Masami; and Sugaya, Yoshio, 4,298,699, Cl. 521-31.000.
Asahi Kasei Kogyo Kabushiki Kaisha: *See—*
Shimizu, Kunitoshi; Takamura, Masakazu; and Iwasa, Toshio, 4,298,644, Cl. 428-91.000.
Asahi Kogaku Kogyo Kabushiki Kaisha: *See—*
Ishii, Haruo, 4,298,264, Cl. 354-242.000.
Asai, Mitsuko: *See—*
Higashide, Eiji; Tanida, Seiichi; Mnroi, Masayuki; and Asai, Mitsuko, 4,298,600, Cl. 424-120.000.
Asaki Kogaku Kogyo Kabushiki Kaisha: *See—*
Aoki, Harumi; and Sawada, Yoshio, 4,298,259, Cl. 354-25.000.
Asawa, Tatsuro; Miyake, Haruhisa; Yamashita, Masami; and Sugaya, Yoshio, to Asahi Glass Company, Ltd. Process for producing fluorinated polymer having ion-exchange groups. 4,298,699, Cl. 521-31.000.
Ashland Oil, Inc.: *See—*
Daniel, Chelliah; and Bursky, Phyllis L., 4,298,755, Cl. 560-214.000.
Ashtheimer, Ludwig; Schenk, Hans-Joachim; and Schwochau, Klaus, to Kernforschungsanlage Julich GmbH. Process for recovery of uranium from sea water. 4,298,577, Cl. 423-6.000.
Associated Engineering, Italy, S.p.A.: *See—*
Bruni, Ludovico; and Iguera, Pierantonio, 4,297,976, Cl. 123-193.0CP.
Atchisson, Maxwell G. Cartridge magazine for firearms. 4,297,800, Cl. 42-49.00A.
Ateliers des Charmilles, S.A.: *See—*
Wavre, Alain, 4,298,782, Cl. 219-69.00M.
Atkinson, Donald A.; and McCulloch, Colin F., to Davy McKee (Minerals & Metals) Limited. Mobile apparatus for containing molten metal. 4,298,191, Cl. 266-165.000.

Atlantic Richfield Company: *See—*
Kapur, Vijay K., 4,298,587, Cl. 423-350.000.
Pritchett, William C., 4,298,086, Cl. 181-113.000.
Atlas Copco Aktiebolag: *See—*
Hansson, Gunnar C., 4,298,317, Cl. 418-43.000.
Atwood Vacuum Machine Company: *See—*
Marx, Thomas O., 4,298,194, Cl. 267-64.110.
Auerbach, Victor, to RCA Corporation. Fault-tolerant interface circuit for parallel digital bus. 4,298,982, Cl. 371-30.000.
Aulich, Hubert; and Papp, Alfred, to Siemens Aktiengesellschaft. Waveguides with a low birefringence. 4,298,245, Cl. 350-96.290.
Austin Company, The: *See—*
Kuipers, Jack, 4,298,874, Cl. 343-112.00R.
Austin, Robert C., to Weld-Loc Systems, Inc. Accumulator for tenuous material. 4,298,152, Cl. 226-95.000.
Automatic Liquid Packaging, Inc.: *See—*
Weiler, Gerhard H.; and Komendowski, Henry, 4,298,045, Cl. 150-0.500.
Autotron Equipment Corporation: *See—*
Curchod, Donald B.; and Sherman, Donald R., 4,297,882, Cl. 73-460.000.
Avdeenko, Boris K.; Bronfman, Aron I.; Vitkin, Alexandr L.; Zelentsov, Boris N.; Kinevsky, Valery N.; and Rozet, Vladimir E. Overvoltage protective device. 4,298,900, Cl. 361-127.000.
AVX Corporation: *See—*
Galvagni, John L., 4,297,773, Cl. 29-25.420.
Ayata, Kenzo: *See—*
Narita, Kiichi; Mori, Takasuke; Ayata, Kenzo; and Makino, Takehisa, 4,298,376, Cl. 75-49.000.
Ayers, Maurice D., to Metal Innovations, Inc. Method of producing low oxide metal powders. 4,298,553, Cl. 264-11.000.
Ayusawa, Saburo: *See—*
Ikeno, Teruo; Kado, Satoshi; Ayusawa, Saburo; Kawasaki, Hironobu; and Watanabe, Takashi, 4,298,661, Cl. 428-623.000.
B. B. Greenberg Company: *See—*
DeFusco, Douglas F., 4,298,154, Cl. 228-49.00R.
B. F. Goodrich Company, The: *See—*
Lai, John T.; and Son, Pyong-Nae, 4,298,737, Cl. 544-360.000.
McCarty, John C.; and Wagner, Terrence E., 4,298,654, Cl. 428-407.000.
B. & R. Engineering Limited: *See—*
Allison, William, 4,297,827, Cl. 53-282.000.
Baba, Takaaki; Sagishima, Takayuki; Kitani, Teruo; and Sasaki, Reiichi, to Matsushita Electric Industrial Co., Ltd. Television receiver. 4,298,891, Cl. 358-183.000.
Babcock & Wilcox Company, The: *See—*
Bohl, Thomas L., 4,298,574, Cl. 422-97.000.
Babington, Robert S., to Owens-Illinois, Inc. Liquid fuel burners. 4,298,338, Cl. 431-352.000.
Baczek, Stanley K.; and McCain, G. Howard, to Diamond Shamrock Corporation. Method of making sheet or shaped cation exchange membrane. 4,298,697, Cl. 521-27.000.
Bailey, Alan C.; and Morrow, Alan J., to Corning Glass Works. Method of making a soot preform compositional profile. 4,298,365, Cl. 65-3.120.
Baker, Charles L., to Canada, Her Majesty the Queen in right of, as represented by the Minister of National Defence. Method and apparatus for improving error rate on radio teletype circuits. 4,298,984, Cl. 375-40.000.
Baker, Gordon P.; and Warman, Thomas E., to Senco Products, Inc. Control arrangement for electro-mechanical tool. 4,298,072, Cl. 173-13.000.
Baker, Thomas N.: *See—*
Hansel, Sydney; and Baker, Thomas N., 4,298,044, Cl. 144-176.000.
Balch, Duane C. Locking fluid valve. 4,298,182, Cl. 251-251.000.
Balkhanova, Galina F.: *See—*
Batalin, Oleg E.; Dykman, Arkady S.; Osadchenko, Alexandr I.; Balkhanova, Galina F.; Belgorodsky, Izrail M.; Nevstruev, Vladimir I.; Radionov, Valery A.; Tulchinsky, Eduard A.; Belyaev, Valentin M.; Smolin, Jury I.; Breiman, Mark I.; Orlyansky, Vitaly V.; Zhirnov, Nikolai Y.; Galibin, Nikolai V.; Troitsky, Adrian P.; and Kovalenko, Vladimir V., 4,298,503, Cl. 252-432.000.
Ballard, Arthur H.; and Klein, Theodore J., to United States of America, Army. Digital filter bank detector. 4,298,985, Cl. 375-82.000.
Baltimore Spice Company, The: *See—*
Ledford, Charles D., 4,298,435, Cl. 201-8.000.
Balwe, Thomas: *See—*
Thyret, Helmut; Balwe, Thomas; Hanzalik, Josef; Furst, Herbert; and Bauer, Johann, 4,298,576, Cl. 422-135.000.
Baney, Ronald H.; and Gaul, John H., Jr.; to Dow Corning Corporation. High yield silicon carbide pre-ceramic polymers. 4,298,558, Cl. 264-65.000.
Baney, Ronald H.; and Gaul, John H., Jr., to Dow Corning Corporation. High yield silicon carbide from alkylated or arylated preceramic polymers. 4,298,559, Cl. 264-65.000.
Banta, Frederick; Milstein, Donald; and Peters, Alan W., to Mobil Oil Corporation. Low pressure hydrotreating of residual fractions. 4,298,458, Cl. 208-112.000.
Barbakadze, Dzhondo F.; Mindeli, Mamuka S.; Macharashvili, Petr G.; Rusidze, Vazha V.; and Suladze, Otari N. Method of introducing powdered reagents into molten metals and apparatus for effecting same. 4,298,192, Cl. 266-218.000.
Barmag Barmer Maschinenfabrik Aktiengesellschaft: *See—*
Bauer, Karl; and Krenzer, Eberhard, 4,297,837, Cl. 57-350.000.
Barnes, Johnny G.; Hurley, Patrick J.; and Miller, Gary W., to International Business Machines Corporation. System and printer justification system. 4,298,290, Cl. 400-3.000.
Barradas, George, to Appliance Design Probe Inc. Apparatus for heating and setting hair. 4,298,787, Cl. 219-222.000.
Barrow, Ralph M., Jr.: *See—*
Johnson, Raynor A.; and Barrow, Ralph M., Jr., 4,298,083, Cl. 180-125.000.
Barton, Derek H. R.; Bronstein-Bonte, Irena Y.; and Taylor, Lloyd D., to Polaroid Corporation. Optical filter agents and photographic products and processes containing same. 4,298,676, Cl. 430-221.000.
Baryshnikova, Svetlana M.: *See—*
Bochkarev, Ellin P.; Prokopov, Igor V.; Eljutin, Alexandr V.; Belsky, Arkady A.; Baryshnikova, Svetlana M.; Nasyrov, Nail Z.; Novikov, Nikolai A.; Khairulin, Edige R.; Zvyagin, Mikhail S.; Abrjutin, Vladimir N.; Konstantinova, Ljubov I.; Ljubimova, Nina A.; and Gorbacheva, Nadezhda S., 4,298,380, Cl. 75-101.0BE.
BASF Aktiengesellschaft: *See—*
Broecker, Franz J.; Baur, Karl G.; Platz, Rolf; and Stabenow, Joachim, 4,298,766, Cl. 568-862.000.
Deguer, Dieter; Siegel, Hardo; and Hannebaum, Heinz, 4,298,438, Cl. 204-78.000.
Distler, Dieter; Mueller, Margarete; Bubam, Hans-Georg; and Addicks, Guenther, 4,298,513, Cl. 260-29.70H.
Dockner, Toni; Kempe, Uwe; Krug, Herbert; Magnussen, Peter; Praetorius, Werner; and Szymanski, Hans J., 4,298,748, Cl. 548-347.000.
Engelbach, Heinz; Krabetz, Richard; Duembgen, Gerd; Willersinn, Carl-Heinz; and Beitelschmidt, Walter, 4,298,763, Cl. 568-479.000.
Goetz, Norbert; Himmele, Walter; and Hupfer, Leopold, 4,298,733, Cl. 544-106.000.
Hahn, Klaus; Hinselmann, Klaus; Halbritter, Klaus; Rebafka, Walter; and Weber, Heinz, 4,298,702, Cl. 521-79.000.
Hamprecht, Gerhard; Stubenrauch, Gerd; Urbach, Hans; and Wuerzer, Bruno, 4,298,731, Cl. 544-11.000.
Hoch, Helmut; Hahn, Erwin; and Hiller, Heinrich, 4,298,534, Cl. 260-358.000.
Lechtken, Peter; Buethe, Ingolf; Jacobi, Manfred; and Trimborn, Werner, 4,298,738, Cl. 546-22.000.
Plath, Peter; Rohr, Wolfgang; Wuerzer, Bruno; and Becker, Rainer, 4,298,749, Cl. 548-377.000.
Sappok, Reinhard; Guellich, Fritz; Roth, Karl; and Wiesenberger, Alois, 4,298,526, Cl. 260-314.500.
Schwarz, Gerd-Ulrich; Kiehs, Karl; Boell, Walter; and Adolphi, Heinrich, 4,298,615, Cl. 424-285.000.
Staab, Heinz; and Ippen, Joachim, 4,298,751, Cl. 549-11.000.
Bashaw, Robert W. Cervical immobilizer. 4,297,994, Cl. 128-133.000.
Baski, Henry A. Pitless adapter. 4,298,065, Cl. 166-88.000.
Batalin, Oleg E.; Dykman, Arkady S.; Osadchenko, Alexandr I.; Balkhanova, Galina F.; Belgorodsky, Izrail M.; Nevstruev, Vladimir I.; Radionov, Valery A.; Tulchinsky, Eduard A.; Belyaev, Valentin M.; Smolin, Jury I.; Breiman, Mark I.; Orlyansky, Vitaly V.; Zhirnov, Nikolai Y.; Galibin, Nikolai V.; Troitsky, Adrian P.; and Kovalenko, Vladimir V. Method of preparing calcium boron phosphate catalyst. 4,298,503, Cl. 252-432.000.
Bath, Nigel A.: *See—*
Laws, Derek R. J.; Bath, Nigel A.; Ennis, Colin S.; Pickett, John A.; and Wheldon, Alfred G., 4,298,626, Cl. 426-600.000.
Baucom, Charlie J. Curb forming apparatus. 4,298,293, Cl. 404-98.000.
Bauer, Erwin; Davids, Ralf; Gotz, Gerhard; Jussen, Hilmar; Arndt, Heinrich; Kummel, Louis; Morhart, Rudolf; and Pollak-Banda, Erich, to Werner & Pfleiderer; and Zahnraderfabrik Renk Aktiengesellschaft. Power distribution gearing for double helix extruders. 4,297,917, Cl. 74-665.00G.
Bauer, Hans F., to Occidental Research Corporation. Method of embrittling waste. 4,298,350, Cl. 44-1.00C.
Bauer, Jack N.: *See—*
DiGiulio, Adolph V.; and Bauer, Jack N., 4,298,703, Cl. 521-88.000.
DiGiulio, Adolph V.; and Bauer, Jack N., 4,298,704, Cl. 521-88.000.
Bauer, Johann: *See—*
Thyret, Helmut; Balwe, Thomas; Hanzalik, Josef; Furst, Herbert; and Bauer, Johann, 4,298,576, Cl. 422-135.000.
Bauer, Karl; and Krenzer, Eberhard, to Barmag Barmer Maschinenfabrik Aktiengesellschaft. Method and apparatus for producing spun yarn characteristics in synthetic multifilament yarns. 4,297,837, Cl. 57-350.000.
Baur, Karl G.: *See—*
Broecker, Franz J.; Baur, Karl G.; Platz, Rolf; and Stabenow, Joachim, 4,298,766, Cl. 568-862.000.
Baxter Travenol Laboratories, Inc.: *See—*
Pernic, Stanley J., 4,298,357, Cl. 55-165.000.
Ruschke, Ricky R., 4,298,358, Cl. 55-185.000.
Wang, Cheng L.; Soodak, Charles; and Lohr, David, 4,298,938, Cl. 364-413.000.
Bayer Aktiengesellschaft: *See—*
Hagemann, Hermann; Klauke, Erich; and Petruck, Gerd-Michael, 4,298,761, Cl. 568-44.000.
Hildebrand, Dietrich; and Gribnau, Thomas, 4,298,395, Cl. 106-163.00R.
Knopf, Herbert; Spahrkas, Heinrich; and Luck, Wolfhard, 4,298,344, Cl. 8-94.260.
Lewalter, Jurgen; Rottmaier, Ludwig; Merten, Rudolf; Zecher, Wilfried; Dunwald, Willi; and Schulte, Bernhard, 4,298,515, Cl. 260-30.40N.

Meyborg, Holger; and Weber, Christian, 4,298,701, Cl. 521-51.000.
BBC Brown, Boveri & Company Limited: *See*—
Fried, Reinhard; Mayer, Andreas; and Perego, Ambrogio, 4,298,028, Cl. 137-868.000.
Gloor, Ernst; Kaufmann, Meinolph; and Kmetz, Allan R., 4,298,249, Cl. 350-338.000.
Keller, Jakob, 4,298,088, Cl. 181-211.000.
Melton, Keith; Mercier, Olivier; and Taiana, Peter, 4,297,779, Cl. 29-446.000.
Muller, Klaus; and Zimmermann, Andreas, 4,298,448, Cl. 204-299.00R.
Sittig, Roland, 4,298,880, Cl. 357-38.000.
Wochele, Jorg, 4,298,058, Cl. 165-161.000.
Beach, Ronald I.: *See*—
Hardman, Harley F.; and Beach, Ronald I., 4,298,354, Cl. 44-56.000.
Beacom, Keith I. Mooring device. 4,297,963, Cl. 114-230.000.
Beaird-Poulan Division: *See*—
Tuggle, Lloyd H., 4,297,786, Cl. 30-382.000.
Bearden, Roby, Jr.: *See*—
Aldridge, Clyde L.; and Bearden, Roby, Jr., 4,298,454, Cl. 208-10.000.
Becker, Manfred; Slabik, Angela; Mucke, Bruno; Moisar, Erik; and von Rintelen, Harald, to AGFA-Gevaert Aktiengesellschaft. Light-sensitive photographic material. 4,298,683, Cl. 430-569.000.
Becker, Rainer: *See*—
Plath, Peter; Rohr, Wolfgang; Wuerzer, Bruno; and Becker, Rainer, 4,298,749, Cl. 548-377.000.
Beckman Instruments, Inc.: *See*—
Buzza, Edmund E., 4,297,903, Cl. 73-864.220.
Lillig, John E.; and Meyer, Richard C., 4,298,570, Cl. 422-64.000.
Beecham Group Limited: *See*—
Wootton, Gordon; and Moore, Richard W., 4,298,745, Cl. 548-313.000.
Beier, Hanns W. Key holder. 4,297,864, Cl. 70-456.00B.
Beitecke, Bernd: *See*—
Geschka, Hugo-Werner; and Beitecke, Bernd, 4,297,859, Cl. 68-13.00R.
Beitelschmidt, Walter: *See*—
Engelbach, Heinz; Krabetz, Richard; Duembgen, Gerd; Willersinn, Carl-Heinz; and Beitelschmidt, Walter, 4,298,763, Cl. 568-479.000.
Bekaan, Alfred: *See*—
Krull, Walther; Bekaan, Alfred; and Schiller, Wolf-Dieter, 4,298,362, Cl. 55-304.000.
Bel Fuse, Inc.: *See*—
Bernstein, Elliot, 4,298,241, Cl. 339-147.00P.
Belgorodsky, Izrail M.: *See*—
Batalin, Oleg E.; Dykman, Arkady S.; Osadchenko, Alexandr I.; Balkhanova, Galina F.; Belgorodsky, Izrail M.; Nevstruev, Vladimir I.; Radionov, Valery A.; Tulchinsky, Eduard A.; Belyaev, Valentin M.; Smolin, Jury I.; Breiman, Mark I.; Orlyansky, Vitaly V.; Zhirnov, Nikolai Y.; Galibin, Nikolai V.; Troitsky, Adrian P.; and Kovalenko, Vladimir V., 4,298,503, Cl. 252-432.000.
Bell & Howell Company: *See*—
Hartmann, Rudolf, 4,298,251, Cl. 350-428.000.
Bell Telephone Laboratories, Incorporated: *See*—
Abbott, Robert P.; Chow, Ming-Chwan; Cirillo, Anthony J.; Drechsler, Rudolph C.; and Horney, Lee F., II, 4,298,977, Cl. 370-62.000.
Boyd, Gary D.; Mohapatra, Sarat K.; Tell, Benjamin; Wagner, Sigurd; and Wudl, Fred, 4,298,250, Cl. 350-357.000.
Casey, Horace C., Jr.; Cho, Alfred Y.; and Foy, Philip W., 4,297,783, Cl. 29-578.000.
Griffith, Gary L.; and Sherman, Charles J., 4,298,237, Cl. 339-17.00L.
Maydan, Dan, 4,298,443, Cl. 204-192.00E.
Montalto, Anthony R.; Scerbo, Louis J.; and Starace, Jeremia P., 4,298,239, Cl. 339-66.00M.
Bellis, Andrew G., to Ford Motor Company. Motor vehicle carburetor choke mechanism. 4,297,980, Cl. 123-438.000.
Beloit Corporation: *See*—
Hergert, Richard E.; and Bergstrom, Jan I., 4,298,429, Cl. 162-343.000.
Belsky, Arkady A.: *See*—
Bochkarev, Ellin P.; Prokopov, Igor V.; Eljutin, Alexandr V.; Belsky, Arkady A.; Baryshnikova, Svetlana M.; Nasyrov, Nail Z.; Novikov, Nikolai A.; Khairulin, Edige R.; Zvyagin, Mikhail S.; Abrjutin, Vladimir N.; Konstantinova, Ljubov I.; Ljubimova, Nina A.; and Gorbacheva, Nadezhda S., 4,298,380, Cl. 75-101.0BE.
Belyaev, Valentin M.: *See*—
Batalin, Oleg E.; Dykman, Arkady S.; Osadchenko, Alexandr I.; Balkhanova, Galina F.; Belgorodsky, Izrail M.; Nevstruev, Vladimir I.; Radionov, Valery A.; Tulchinsky, Eduard A.; Belyaev, Valentin M.; Smolin, Jury I.; Breiman, Mark I.; Orlyansky, Vitaly V.; Zhirnov, Nikolai Y.; Galibin, Nikolai V.; Troitsky, Adrian P.; and Kovalenko, Vladimir V., 4,298,503, Cl. 252-432.000.
Benditalia S.p.A.: *See*—
Cadeddu, Leonardo, 4,297,846, Cl. 60-585.000.
Benjamin, Milton L.; and Miles, Wilbur N., to Erickson Tool Company. Spring actuated chuck. 4,298,208, Cl. 279-91.000.
Benson, Clark K.; Caridis, Andrew A.; and Nilsen, Arthur A., to Heat and Control, Inc. Method and apparatus for flavoring and surface treatment of meat products. 4,297,942, Cl. 99-386.000.
Bentvelzen, Jozef M.; Meredith, Michael D.; Torregrossa, Louis O.; and Bepple, Henry, to Weyerhaeuser Company. Method and apparatus for intimately mixing oxygen and pulp while using an alkali to extract bleaching by-products. 4,298,427, Cl. 162-57.000.
Bentvelzen, Jozef M.: *See*—
Torregrossa, Louis O.; Bentvelzen, Jozef M.; Crosby, Gerald D.; Meredith, Michael D.; and Bepple, Henry, 4,298,426, Cl. 162-57.000.
Benuzzi, Gino, to Giben Impianti S.p.A. Guard for sawing machines. 4,297,928, Cl. 83-57.000.
Bepple, Henry: *See*—
Bentvelzen, Jozef M.; Meredith, Michael D.; Torregrossa, Louis O.; and Bepple, Henry, 4,298,427, Cl. 162-57.000.
Torregrossa, Louis O.; Bentvelzen, Jozef M.; Crosby, Gerald D.; Meredith, Michael D.; and Bepple, Henry, 4,298,426, Cl. 162-57.000.
Berenblut, Brian J.: *See*—
Munday, George; Slater, David H.; Tyley, Leonard R. T.; Berenblut, Brian J.; and Whitehouse, Harry B., 4,298,955, Cl. 364-900.000.
Beresford-Jones, Godric P. K. Waterproof seal for a push-button. 4,298,778, Cl. 200-302.000.
Berger, Eugene L., to General Electric Company. Downhole pressure measurements of drilling mud. 4,297,880, Cl. 73-155.000.
Berghahn, Walter G.; and Weinstein, Jack, to Bristol-Myers Company. Dial type child resistant dispenser. 4,298,125, Cl. 206-531.000.
Berglund, Erling, to LKB Clinicon Aktiebolag. Pipetting and dosing device. 4,298,575, Cl. 73-864.130.
Berglund, Neil C.; Kempke, William G.; and Richardson, William C., to International Business Machines Corporation. Computer instruction prefetch circuit. 4,298,927, Cl. 364-200.000.
Bergman, Raymond A. Air float power rotation system. 4,298,307, Cl. 414-676.000.
Bergstrom, Jan I.: *See*—
Hergert, Richard E.; and Bergstrom, Jan I., 4,298,429, Cl. 162-343.000.
Berkowitz, Sidney, to FMC Corporation. Preparation of alkyl glyceryl ether alcohols. 4,298,764, Cl. 568-618.000.
Berlongieri, John J. Aircraft safety apparatus. 4,298,177, Cl. 244-139.000.
Bernard, Claude R.; Daigne, Bernard; and Girard, Francois, to Office National d'Etudes et de Recherches Aerospaticles. Spectrograph usable in particular in the far ultraviolet. 4,298,797, Cl. 250-372.000.
Bernstein, Elliot, to Bel Fuse, Inc. Splicer fuse integrated in line cord plug. 4,298,241, Cl. 339-147.00P.
Berol Kemi AB: *See*—
Blysing, Ake, 4,298,352, Cl. 44-53.000.
Berthier, Marc A.; and Chauvel, Alain Y. Folding chair. 4,298,227, Cl. 297-58.000.
Bertolacini, Ralph J.: *See*—
Pellet, Regis J.; Oradassi, Michael J.; and Bertolacini, Ralph J., 4,298,461, Cl. 208-139.000.
Beth GmbH: *See*—
Krull, Walther; Bekaan, Alfred; and Schiller, Wolf-Dieter, 4,298,362, Cl. 55-304.000.
Beziac, Gilbert F. A.: *See*—
Euler, August H. L.; and Beziac, Gilbert F. A., 4,298,417, Cl. 156-228.000.
Bhardwaj, Chaman L.: *See*—
Galleymore, Harry R.; James, Kenneth; Jones, Haydn F.; Bhardwaj, Chaman L.; Plant, James S., deceased; and Plant, Aline P., administrator, 4,298,730, Cl. 536-119.000.
Biddle, Richard A.; Vriesen, Calvin W.; and Sutton, Ernest S., to Thiokol Corporation. Gas generator composition for producing cool effluent gases with reduced hydrogen cyanide content. 4,298,412, Cl. 149-19.500.
Bielska-Lewandowska, Halina; Irisova, Natalija; Jung, Grzegorz; Lewandowski, Stanislaw J.; Probornv, Aleksandr; Sobolewski, Roman; and Vinogradov, Eugenij, to Polska Akademia Nauk Instytut Fizyki. Frequency converter of electromagnetic radiation in millimeter and submillimeter wavelength range. 4,298,990, Cl. 455-325.000.
Bigelow, George A.; Rehage, Ted A.; and Shook, Frankie S., to International Business Machines Corporation. Alternating data buffers when one buffer is empty and another buffer is variably full of data. 4,298,954, Cl. 364-900.000.
Bilek, F. Thomas: *See*—
Hartsell, Glenn A.; and Bilek, F. Thomas, 4,298,946, Cl. 364-557.000.
Bingham, Robert M.: *See*—
LeBlanc, Ralph W.; and Bingham, Robert M., 4,298,469, Cl. 210-168.000.
Biphase Energy Systems: *See*—
Ritzi, Emil W., 4,298,311, Cl. 415-80.000.
Birch, Stanley F.; Lawler, John A.; and Paynter, Gerald C., to Boeing Company, The. Vortex generators for internal mixing in a turbofan engine. 4,298,089, Cl. 181-213.000.
Bischoff, Jurgen H.; and Sebulke, Joachim A., to Shell Internationale Research Maatschappij B.V. Plural electrode method and means for water bottom logging. 4,298,840, Cl. 324-365.000.
Bishop, John F., to Eastman Kodak Company. Photographic element having overcoating of ionic polyester in hydrophilic colloid. 4,298,682, Cl. 430-533.000.

Bizerba-Werke Wilhelm Kraut KG: *See*—
Kuhnle, Ernst; and Schwarz, Josef, 4,297,875, Cl. 73-862.620.
Black & Decker Inc.: *See*—
Jackson, Ronald A.; and Maruscak, John, 4,298,095, Cl. 182-184.000.
Jinkins, Danny R., 4,298,204, Cl. 277-165.000.
Pioch, Peter P., 4,297,831, Cl. 56-295.000.
Black, James M., to United States of America, National Aeronautics and Space Administration. Power converter. 4,298,926, Cl. 363-132.000.
Blaney, Peter G.; Conley, Dwain D.; and Zeigner, Willard L., to Zemco, Inc. Fluid flow sensor. 4,297,899, Cl. 73-861.580.
Blasberg, Helmar; and Wilkens, Christian, to Karl Mayer Textilmaschinenfabrik GmbH. High density pile ware and the process therefor. 4,297,858, Cl. 66-194.000.
Blaszyk, Paul E.; and Murphy, Susan F., to Corning Glass Works. Method of making optical fibers having improved core roundness. 4,298,364, Cl. 65-3.110.
Blessing, James E.: *See*—
Ross, David S.; and Blessing, James E., 4,298,450, Cl. 208-8.0LE.
Blodgett, Stewart B. Differential weighing system providing improved signal to noise ratio. 4,298,081, Cl. 177-187.000.
Blotenberg, Wilfried, to Gutehoffnungshutte Sterkrade AG. Process and apparatus for prevention of surging in turbocompressors. 4,298,310, Cl. 415-1.000.
Bluhm, Eugene A.: *See*—
Funk, Larry J.; and Bluhm, Eugene A., 4,297,950, Cl. 104-172.0BT.
Blysing, Ake, to Berol Kemi AB. Diesel fuel comprising methanol and a methanol-soluble polyoxyalkylene compound. 4,298,352, Cl. 44-53.000.
Bobard, Emile, to Bobard Jeune, S.A., a part interest. Ballasting and inflation apparatus. 4,298,047, Cl. 152-417.000.
Bobard Jeune, S.A.: *See*—
Bobard, Emile, 4,298,047, Cl. 152-417.000.
Bochkarev, Ellin P.; Prokopov, Igor V.; Eljutin, Alexandr V.; Belsky, Arkady A.; Baryshnikova, Svetlana M.; Nasyrov, Nail Z.; Novikov, Nikolai A.; Khairulin, Edige R.; Zvyagin, Mikhail S.; Abrjutin, Vladimir N.; Konstantinova, Ljubov I.; Ljubimova, Nina A.; and Gorbacheva, Nadezhda S. Process for purifying low-melting metals from impurities. 4,298,380, Cl. 75-101.0BE.
Boehringer Mannheim GmbH: *See*—
Rehner, Helmut; and Rittersdorf, Walter, 4,298,498, Cl. 252-408.000.
Boeing Company, The: *See*—
Birch, Stanley F.; Lawler, John A.; and Paynter, Gerald C., 4,298,089, Cl. 181-213.000.
Koenig, Philip C., 4,298,904, Cl. 361-386.000.
Boell, Walter: *See*—
Schwarz, Gerd-Ulrich; Kiehs, Karl; Boell, Walter; and Adolphi, Heinrich, 4,298,615, Cl. 424-285.000.
Boesiger, Dwight D.: *See*—
Coombs, Daniel M.; and Boesiger, Dwight D., 4,298,456, Cl. 208-86.000.
Boettcher, Bodo, to N.V. Raychem S.A. Heat recoverable article. 4,298,641, Cl. 428-36.000.
Bogoch, Samuel. Detection of malignant tumor cells. 4,298,590, Cl. 424-1.000.
Bohl, Thomas L., to Babcock & Wilcox Company, The. Hydrogen gas detector. 4,298,574, Cl. 422-97.000.
Bonamour du Tartre, Georges: *See*—
Germain, Alfred; and Bonamour du Tartre, Georges, 4,298,188, Cl. 266-114.000.
Bongers, Piet F.; van Tol, Maurits W.; and Robertson, John M., to U.S. Philips Corporation. Luminescent screen. 4,298,820, Cl. 313-463.000.
Borghi, Italo; Foschi, Sergio; and Galli, Paolo, to Montedison S.p.A. Thermoplastic rubbers and process for preparing same. 4,298,721, Cl. 526-348.000.
Bosler, Alan J.; and Nash, Larry E., to United States of America, Navy. Cooling apparatus for electronic modules. 4,298,905, Cl. 361-386.000.
Bossler, Robert B., Jr.; and Hardersen, Charles P., to Kaman Aerospace Corporation. Torque splitting gear drive. 4,297,907, Cl. 74-417.000.
Bouchard, Claude: *See*—
Carette, Jean-Denis; and Bouchard, Claude, 4,298,817, Cl. 313-362.100.
Bouldin, Eric W.; and Drexler, Jerome, to Drexler Technology Corporation. Reflective data storage medium made by silver diffusion transfer in silver-halide emulsion incorporating nuclei. 4,298,684, Cl. 430-616.000.
Bouvier, Alfred J.: *See*—
Naus, Hubert W.; and Bouvier, Alfred J., 4,298,566, Cl. 264-317.000.
Boyama, Kimihiro, to Kokusan Denki Co., Ltd. Ignition system for an internal combustion engine. 4,297,977, Cl. 123-320.000.
Boyd, Gary D.; Mohapatra, Sarat K.; Tell, Benjamin; Wagner, Sigurd; and Wudl, Fred, to Bell Telephone Laboratories, Incorporated. Solid electrochromic devices. 4,298,250, Cl. 350-357.000.
Bozeman, Milton R. Winterizing apparatus for recreational vehicles, vacation homes and the like. 4,298,021, Cl. 137-334.000.
Bozzo, Gian M.; Gava, Paolo; and Paruzzolo, Antonio, to Tecnomare S.p.A. Composite flexible conduit for sucking large volumes of sea water from deep water bodies. 4,298,295, Cl. 405-52.000.
BPB Industries Limited: *See*—
Leeming, Peter A.; Mitakidis, Dimitrios; and Woodrow, Peter F., 4,298,394, Cl. 106-111.000.
Brachthauser, Kunibert; and Herchenbach, Horst, to Klockner-Humboldt-Deutz AG. Method and system for burning fine-grained material, particularly for the manufacture of cement clinkers. 4,298,393, Cl. 106-100.000.
Bradford, Larry L.; Jordan, David R.; and Williams, Kenneth W., to Dow Chemical Company, The. Method and apparatus for the preparation of foamed structures. 4,298,557, Cl. 264-51.000.
Bradlee, Charles R., to Monarch Machine Tool Company, The. Method and apparatus for tensioning metallic strips on a slitting line. 4,298,633, Cl. 427-172.000.
Bradley, Lindell P.: *See*—
Bradley, Robert F.; and Bradley, Lindell P., 4,298,115, Cl. 194-4.00F.
Bradley, Robert F.; and Bradley, Lindell P., to Micro-Circuits Company. Time-lapse indicator. 4,298,115, Cl. 194-4.00F.
Brand, Arnold J.: *See*—
Acker, Robert H.; Wessling, William C.; Brand, Arnold J.; and Naydan, Bob N., 4,298,832, Cl. 318-318.000.
Brandt Industries, Inc.: *See*—
Brandt, Robert O., Jr., 4,297,900, Cl. 73-861.660.
Brandt, Robert O., Jr., to Brandt Industries, Inc. Averaging pitot primary system. 4,297,900, Cl. 73-861.660.
Branick Mfg., Inc.: *See*—
Severson, Larry A., 4,298,420, Cl. 156-394.00R.
Branson, Charles R. Chirping flying saucer. 4,297,809, Cl. 46-74.00D.
Bray, Geddes A., to Mather & Platt Limited. Heat sensitive release devices. 4,298,068, Cl. 169-39.000.
Brehm, Michael: *See*—
Rutsch, Peter W.; and Brehm, Michael, 4,298,556, Cl. 264-46.600.
Breiman, Mark I.: *See*—
Batalin, Oleg E.; Dykman, Arkady S.; Osadchenko, Alexandr I.; Balkhanova, Galina F.; Belgorodsky, Izrail M.; Nevstruev, Vladimir I.; Radionov, Valery A.; Tulchinsky, Eduard A.; Belyaev, Valentin M.; Smolin, Jury I.; Breiman, Mark I.; Orlyansky, Vitaly V.; Zhirnov, Nikolai Y.; Galibin, Nikolai V.; Troitsky, Adrian P.; and Kovalenko, Vladimir V., 4,298,503, Cl. 252-432.000.
Breslin, Michael D.; and Cosper, David R., to Nalco Chemical Company. Use of additives in pulp bleaching processes to preserve pulp strength. 4,298,428, Cl. 162-73.000.
Brewing Patents Limited: *See*—
Laws, Derek R. J.; Bath, Nigel A.; Ennis, Colin S.; Pickett, John A.; and Wheldon, Alfred G., 4,298,626, Cl. 426-600.000.
Brimec (U.K.) Limited: *See*—
Jones, Anthony E., 4,298,304, Cl. 414-492.000.
Brinkmnn En Niemeyer N.V.: *See*—
Poiesz, Gerardus W., 4,297,974, Cl. 119-51.00R.
Bristol-Myers Company: *See*—
Berghahn, Walter G.; and Weinstein, Jack, 4,298,125, Cl. 206-531.000.
Bristow, Ian T.; and Petts, Nigel J., to Hobourn-Eaton Limited. Positive displacement pump systems. 4,298,315, Cl. 417-300.000.
Britch, James A., to Standard Oil Company (Indiana). Latching assembly for riser pipe spacers. 4,298,218, Cl. 285-3.000.
British Aerospace Public Limited Company: *See*—
Morton, Donald F., 4,297,904, Cl. 74-5.00F.
British Broadcasting Corporation: *See*—
Byford, Roger G., 4,298,981, Cl. 371-37.000.
British Cellophane Limited: *See*—
Hood, John L. L., 4,298,440, Cl. 204-165.000.
British Steel Corporation: *See*—
Brownlee, Malcolm; and Harrison, Thomas C., 4,298,406, Cl. 148-12.00B.
Hill, Walter J., 4,298,808, Cl. 250-563.000.
Brock, George W.: *See*—
Argumedo, Armando J.; Brock, George W.; and Losee, Paul D., 4,298,899, Cl. 360-122.000.
Broecker, Franz J.; Baur, Karl G.; Platz, Rolf; and Stabenow, Joachim, to BASF Aktiengesellschaft. Preparation of 2-methyl-pentane-2,4-diol. 4,298,766, Cl. 568-862.000.
Bronfman, Aron I.: *See*—
Avdeenko, Boris K.; Bronfman, Aron I.; Vitkin, Alexandr L.; Zelentsov, Boris N.; Kinevsky, Valery N.; and Rozet, Vladimir E., 4,298,900, Cl. 361-127.000.
Bronstein-Bonte, Irena Y.: *See*—
Barton, Derek H. R.; Bronstein-Bonte, Irena Y.; and Taylor, Lloyd D., 4,298,676, Cl. 430-221.000.
Brooks, Robert B., to General Electric Company. Refrigerator defrost control with control of time interval between defrost cycles. 4,297,852, Cl. 62-153.000.
Brown, Herbert C., to Aldrich-Boranes, Inc. Borane-1,4-thioxane. 4,298,750, Cl. 549-4.000.
Brown, Joseph P.: *See*—
Parkinson, Thomas M.; Brown, Joseph P.; and Wingard, Robert E., Jr., 4,298,595, Cl. 424-78.000.
Brown, Keith E.: *See*—
Prior, William C.; and Brown, Keith E., 4,298,025, Cl. 137-624.140.
Brown, Milton F., Jr. Vehicle safety restraint device. 4,298,214, Cl. 280-735.000.
Brown, Richard E.; St. Georgiev, Vasil; and Loev, Bernard, to USV Pharmaceutical Corporation. Esters of benzoxa(thia)zole-2-carboxylic acids. 4,298,742, Cl. 548-152.000.
Brownlee, Malcolm; and Harrison, Thomas C., to British Steel Corporation. Manufacture of steel products. 4,298,406, Cl. 148-12.00B.
Bruker, Jacques: *See*—
Lotteau, Jacques; Bruker, Jacques; and Freche, Charles, 4,298,210, Cl. 280-259.000.

Bruni, Ludovico; and Iguera, Pierantonio, to Associated Engineering, Italy, S.p.A. Piston and cylinder assemblies. 4,297,976, Cl. 123-193.0CP.
Bruno, Vogel, to N.V. APR Europe S.A. Method and apparatus for manufacturing seamless printing roll. 4,298,680, Cl. 430-300.000.
Bryant, Clyde C. Distress gas generating signal balloon apparatus. 4,298,777, Cl. 200-61.45R.
BSG-Schalttechnik GmbH & Co., K.G.: *See—*
Granholm, Carl; and Faudi, Rudi, 4,298,792, Cl. 235-375.000.
Bubam, Hans-Georg: *See—*
Distler, Dieter; Mueller, Margarete; Bubam, Hans-Georg; and Addicks, Guenther, 4,298,513, Cl. 260-29.70H.
Bucaro, Joseph A., to United States of America, Navy. High-sensitivity, low-noise, remote optical fiber. 4,297,887, Cl. 73-655.000.
Buchanan, Steven O.; and Phillips, James W., to Dwyer Instruments, Inc. Roll-up type U-tube manometer. 4,297,889, Cl. 73-747.000.
Buck, Norman R.; and Hanson, David J., to Vital Signs, Inc. Microprocessor controlled telephone set. 4,298,775, Cl. 179-81.00R.
Bueno, Alejandro G.: *See—*
Stover, K. Lawrence; Bueno, Alejandro G.; Miller, James W.; and Shamp, Donald E., 4,298,372, Cl. 65-136.000.
Buethe, Ingolf: *See—*
Lechtken, Peter; Buethe, Ingolf; Jacobi, Manfred; and Trimborn, Werner, 4,298,738, Cl. 546-22.000.
Buettner, Larry H. Toy game bank. 4,297,807, Cl. 46-4.000.
Buffet, Jean, to Air Industrie. Heat exchangers for thermo-electric installations comprising thermo-elements. 4,297,849, Cl. 62-3.000.
Bulloch, David K.; and Kim, Hong Z., to Philip A. Hunt Chemical Corp. N,N Disubstituted p-phenylenediamine phosphates to form a color developer working solution, a color developer concentrate containing such a phosphate and a method of using said working solution for color development of color film. 4,298,681, Cl. 430-466.000.
Bullock, Ralph; and Skibinski, Orland E. Earthen-covered structure and panel used therein. 4,297,817, Cl. 52-169.600.
Bunker Ramo Corporation: *See—*
Hall, Stanley R., 4,298,951, Cl. 364-752.000.
Burianek, Rudolf; and Tschannen, Gottfried, to Siemenas-Albis AG. Synchronization circuit for video clock oscillators. 4,298,889, Cl. 358-148.000.
Burkart, Alan R.: *See—*
Langdon, C. Ray; and Burkart, Alan R., 4,298,408, Cl. 148-32.000.
Burlington Industries, Inc.: *See—*
Lilly, James R., 4,297,836, Cl. 57-291.000.
Burns, Dallas D.: *See—*
Glass, Cecil A.; and Burns, Dallas D., 4,297,949, Cl. 102-229.000.
Burris, Michael V. Asphalt-sulfur emulsion composition. 4,298,397, Cl. 106-274.000.
Burroughs Corporation: *See—*
McElligott, Michael J.; and Tkalenko, Victor J., Jr., 4,298,216, Cl. 203-6.000.
Burroughs, Elvin O. Chain tightener attachment. 4,297,916, Cl. 74-544.000.
Burroughs Wellcome Co.: *See—*
Parikh, Indu; and Cuatrecasas, Pedro, 4,298,685, Cl. 435-7.000.
Snary, David, 4,298,596, Cl. 424-88.000.
Bursky, Phyllis L.: *See—*
Daniel, Chelliah; and Bursky, Phyllis L., 4,298,755, Cl. 560-214.000.
Bush, Steven C.; and Smathers, Robert E., to Product Dynamics, Ltd. Game. 4,298,199, Cl. 273-1.0GD.
Bushee, Lawrence C., to Amana Refrigeration, Inc. Heat exchange system. 4,297,987, Cl. 126-351.000.
Bushtedt, Jury P.: *See—*
Paton, Boris E.; Kudinov, Vladimir M.; Volgin, Leonid A.; Petushkov, Vladimir G.; Bushtedt, Jury P.; Koroteev, Anatoly Y.; and Kotov, Viktor A., 4,297,946, Cl. 102-307.000.
Busi, Giovanni. Apparatus for knitting terry loops on a circular hosiery machine. 4,297,857, Cl. 66-9.00R.
Butler, G. Theodore; Porter, Travis G.; and Fisher, Harold E., to Mechtron International Corporation. Fuel burner having flame stabilization by internal recirculation. 4,298,337, Cl. 431-285.000.
Butt, Alan G.; and Whitehead, Abe G., to Trane Company, The. Method for joining two plate type heat exchanger core sections with an intermodular layer for improved heat transfer. 4,297,775, Cl. 29-157.30R.
Butter, Stephen A.; Chester, Arthur W.; and Schwartz, Albert B., to Mobil Oil Corporation. Conversion of synthesis gas with iron-containing catalyst. 4,298,695, Cl. 518-720.000.
Buzza, Edmund E., to Beckman Instruments, Inc. Liquid transfer valve. 4,297,903, Cl. 73-864.220.
Byford, Roger G., to British Broadcasting Corporation. Decoding shortened cyclic block codes. 4,298,981, Cl. 371-37.000.
C. L. Frost & Son, Inc.: *See—*
Frost, Charles C.; and Weis, Siegfried K., 4,297,959, Cl. 113-116.0HH.
Gurney, Gerald W., 4,297,839, Cl. 59-85.000.
Gurney, Gerald W.; and Lanham, William E., Jr., 4,297,840, Cl. 59-85.000.
C. Sherman Johnson Company, Inc.: *See—*
Johnson, Curtiss S., Jr., 4,297,962, Cl. 114-218.000.
Cabot Berylco Inc.: *See—*
Langdon, C. Ray; and Burkart, Alan R., 4,298,408, Cl. 148-32.000.
Cabot Corporation: *See—*
Douglas, Donald A.; Menashi, Jameel; and Rappas, Alkis S., 4,298,581, Cl. 423-58.000.
Menashi, Jameel; Rappas, Alkis S.; and Douglas, Donald A., 4,298,582, Cl. 423-58.000.
Cadeddu, Leonardo, to Benditalia S.p.A. Two-compartments fluid reservoir. 4,297,846, Cl. 60-585.000.
Calcagno, Giancarlo, to Ligurchim S.r.l. Preparation of thion- and thiol-carbamic esters. 4,298,524, Cl. 260-239.0BF.
Calcasola, Richard W.: *See—*
Sundermeyer, Frank D.; and Calcasola, Richard W., 4,298,959, Cl. 364-900.000.
California R & D Center: *See—*
Jones, Lawrence T.; Sims, Anson; Howden, Ashley G.; Knighton, Mark S.; and Kingsbury, LC James, 4,298,788, Cl. 219-386.000.
Campbell, Grover L.; and Hobbs, James W., to Phillips Petroleum Co. Fractionator feed tank pressure control. 4,298,363, Cl. 62-21.000.
Canada, Her Majesty the Queen in right of, as represented by the Minister of National Defence: *See—*
Baker, Charles L., 4,298,984, Cl. 375-40.000.
Cancio, Leopoldo V.; and Wu, Pai-Chuan, to Clopay Corporation. Cross-tearable decorative sheet material. 4,298,647, Cl. 428-167.000.
Caneer, Clifford, Jr.: *See—*
Anderson, Ronald B.; Caneer, Clifford, Jr.; and Maki, Terrance C., 4,297,771, Cl. 24-263.0DA.
Canon Kabushiki Kaisha: *See—*
Kawamura, Masaharu; Shigeta, Yoshihiro; Uchidoi, Masanori; Sugiura, Yoji; and Yamamoto, Hiroshi, 4,298,256, Cl. 354-23.00D.
Marushima, Giichi; Tanaka, Hiroshi; Tosaka, Umi; Takahashi, Shinkichi; and Komiyu, Takao, 4,298,669, Cl. 430-55.000.
Murai, Keiichi; and Matsuo, Takehiko, 4,298,670, Cl. 430-67.000.
Sugiura, Muneharu; Minoura, Kazuo; and Minami, Setsuo, 4,298,271, Cl. 355-8.000.
Tajima, Hatsuo; Hosono, Nagao; and Kanbe, Junichiro, 4,297,970, Cl. 118-652.000.
Togo, Shoichi; and Miyashita, Takeshi, 4,298,257, Cl. 354-23.00D.
Torigai, Akiyoshi, 4,297,969, Cl. 118-652.000.
Yoshimura, Shigeru; Nomura, Akihiro; and Hayakawa, Kimiaki, 4,298,279, Cl. 355-133.000.
Canron Corp.: *See—*
Pearson, Eugene W.; and Short, Wilbur O., 4,297,870, Cl. 72-443.000.
Capozzi, Anthony J., to International Business Machines Corporation. Integrated multilevel storage hierarchy for a data processing system with improved channel to memory write capability. 4,298,929, Cl. 364-200.000.
Cardiac Pacemakers, Inc.: *See—*
Wright, Thomas C.; Hudrlik, Terrence R.; Mills, Perry A.; Rust, Robert C.; and Wallner, Thomas G., 4,298,007, Cl. 128-419.0PG.
Cardot, Claude R., to Compagnie Internationale Pour l'Informatique CII Honeywell Bull. Method of and apparatus for reading data from reference zones of a memory. 4,298,898, Cl. 360-67.000.
Carette, Jean-Denis; and Bouchard, Claude. Ion-electron source with channel multiplier having a feedback region. 4,298,817, Cl. 313-362.100.
Cargill Incorporated: *See—*
Moulson, Thomas J.; and Greenzweig, John E., 4,298,711, Cl. 525-40.000.
Caridis, Andrew A.: *See—*
Benson, Clark K.; Caridis, Andrew A.; and Nilsen, Arthur A., 4,297,942, Cl. 99-386.000.
Carl Freudenberg, Firma: *See—*
Holzer, Helmut; and von Arndt, Ernst M., 4,298,203, Cl. 277-152.000.
Rutsch, Peter W.; and Brehm, Michael, 4,298,556, Cl. 264-46.600.
Carl Maxey Company, The: *See—*
Maxey, Carl W.; and Leyde, Warren, 4,298,286, Cl. 356-381.000.
Carlson, Curt T.: *See—*
Natitus, Donald P.; and Carlson, Curt T., 4,298,863, Cl. 340-573.000.
Carlson, David H. J., to UOP Inc. Catalytic composite particularly useful for the oxidation of mercaptans and the removal of gums contained in a sour petroleum distillate. 4,298,502, Cl. 252-431.00N.
Carney, Thomas B.: *See—*
Sullivan, Roger M., 4,298,875, Cl. 343-112.0CA.
Carrier Corporation: *See—*
Post, John E., 4,298,164, Cl. 236-49.000.
Carrupt, Pierre-Alain: *See—*
Vogel, Pierre; and Carrupt, Pierre-Alain, 4,298,535, Cl. 260-363.000.
Carstensen, Franklin E., to American Industries Inc. Six lever racing clutch. 4,298,112, Cl. 192-70.290.
Carter, Jackie L.; and Carter, Jerry D. Bale handling apparatus. 4,298,301, Cl. 414-24.600.
Carter, Jerry D.: *See—*
Carter, Jackie L.; and Carter, Jerry D., 4,298,301, Cl. 414-24.600.
Case, Edward M.: *See—*
Hopper, Chester S.; and Case, Edward M., 4,298,207, Cl. 277-230.000.
Casey, Horace C., Jr.; Cho, Alfred Y.; and Foy, Philip W., to Bell Telephone Laboratories, Incorporated. Method of fabricating GaAs devices utilizing a semi-insulating layer of AlGaAs in combination with an overlying masking layer. 4,297,783, Cl. 29-578.000.
Cash, John R.: *See—*
Van Steenwyk, Donald H.; Cash, John R.; and Ott, Paul W., 4,297,790, Cl. 33-313.000.

Casson, Harold V.; Crabtree, Grant O.; Kindl, Bruno; and Noonan, Edward B., to Huron Chemicals Limited. Protection of substrates against corrosion. 4,298,416, Cl. 156-87.000.
Castillo, Tomas R.; and Gardiner, Arthur L., to United States of America, Army. Ammunition feeder. 4,297,939, Cl. 89-33.00L.
Cegedur Societe de Transformation de l'Aluminium Pechiney: *See—*
Kucza, Jean-Claude; Mastrot, Albert; Perrot, Rene; and Wattier, Jean-Mary, 4,297,777, Cl. 29-420.000.
Celanese Corporation: *See—*
Taskier, Henry T., 4,298,666, Cl. 429-206.000.
Turnbull, John, 4,298,648, Cl. 428-195.000.
Cerankowski, Leon D.: *See—*
Land, Edwin H.; Cerankowski, Leon D.; and Mattucci, Neil, 4,298,674, Cl. 430-213.000.
Chahroudi, Day, to Heat Mirror Associates. Method for multilayer thin film deposition. 4,298,444, Cl. 204-192.00R.
Champion International Corporation: *See—*
Cottrell, Edward D., 4,298,118, Cl. 198-382.000.
Roccaforte, Harry I.; and Hanko, Jimmy J., 4,298,123, Cl. 206-396.000.
Chang, Ching-Te; and Su, Tsung-Tsan, to Industrial Technology Research Institute. O-Aminoalkylsalicylates. 4,298,603, Cl. 424-230.000.
Chapman, John F., to Rolls-Royce Limited. Multi-layer acoustic linings. 4,298,090, Cl. 181-286.000.
Chaudorge, Emile, to Chauronnerie Tolerie Industrielle d'Angerrville "CTIA". Apparatus for loading solid material into a container. 4,298,306, Cl. 414-525.00R.
Chauronnerie Tolerie Industrielle d'Angerrville "CTIA": *See—*
Chaudorge, Emile, 4,298,306, Cl. 414-525.00R.
Chauvel, Alain Y.: *See—*
Berthier, Marc A.; and Chauvel, Alain Y., 4,298,227, Cl. 297-58.000.
Chemed Corporation: *See—*
Haggard, William J., 4,298,018, Cl. 137-3.000.
Chemplex Company: *See—*
Machonis, John, Jr.; Schmukler, Seymour; Zeitlin, Robert J.; and Shida, Mitsuzo, 4,298,712, Cl. 525-74.000.
Cheng, Dah Y., to International Power Technology, Inc. Control system for Cheng dual-fluid cycle engine system. 4,297,841, Cl. 60-39.300.
Cheng, Hsiung; and Wintersdorff, Peter, to Merck & Co., Inc. Xanthan gum-modified starches. 4,298,729, Cl. 536-102.000.
Cheng, William J.; and Guthrie, David B., to Petrolite Corporation. Low temperature process of preparing $Mg(OH)_2$ suspensions. 4,298,482, Cl. 252-25.000.
Chesler, Ronald B.: *See—*
Dabby, Franklin W.; and Chesler, Ronald B., 4,298,366, Cl. 65-3.120.
Chester, Arthur W.: *See—*
Butter, Stephen A.; Chester, Arthur W.; and Schwartz, Albert B., 4,298,695, Cl. 518-720.000.
Chimura, Kozo: *See—*
Ogihara, Masuo; Chimura, Kozo; Shinozaki, Nobuo; and Seki, Yoichi, 4,298,972, Cl. 368-222.000.
Cho, Alfred Y.: *See—*
Casey, Horace C., Jr.; Cho, Alfred Y.; and Foy, Philip W., 4,297,783, Cl. 29-578.000.
Chow, Ming-Chwan: *See—*
Abbott, Robert P.; Chow, Ming-Chwan; Cirillo, Anthony J.; Drechsler, Rudolph C.; and Horney, Lee F., II, 4,298,977, Cl. 370-62.000.
Christensen, Burton G.; Guthikonda, Ravindra N.; and Ratcliffe, Ronald W., to Merck & Co., Inc. 6-Amido-3-substituted-1-azabicyclo[3.2.0]-hept-2-en-7-one-2-carboxylic acid. 4,298,741, Cl. 546-272.000.
Christenson, Roger M.: *See—*
Schimmel, Karl F.; Seiner, Jerome A.; Dowbenko, Rostyslaw; and Christenson, Roger M., 4,298,511, Cl. 260-29.2TN.
Christianson, Tony. Pilot controlled regulator second stage. 4,297,998, Cl. 128-204.260.
Christini, James N.: *See—*
Powers, John A.; and Christini, James N., 4,298,485, Cl. 252-49.700.
Christopher, Glenn B.: *See—*
Regalbuto, John A.; and Christopher, Glenn B., 4,298,063, Cl. 166-55.000.
Christou, Aristos: *See—*
Davey, John E.; and Christou, Aristos, 4,298,403, Cl. 148-1.500.
Chugai Seiyaku Kabushiki Kaisha: *See—*
Oi, Nobuhiro; Aoki, Bunya; Shinozaki, Teizo; Moro, Kanji; Matsunaga, Isao; Noto, Takao; Nebashi, Toshiyuki; Harada, Yusuke; Endo, Hisao; Kimura, Takao; Okazaki, Hiroshi; Ogawa, Haruki; and Shindo, Minoru, 4,298,605, Cl. 424-246.000.
Ciba-Geigy Ag: *See—*
Tzikas, Athanassios, 4,298,536, Cl. 260-378.000.
Ciba-Geigy Corporation: *See—*
Lange, Burkhart; Agarwal, Suresh C.; Fringeli, Werner; and Gunter, Franz, 4,298,490, Cl. 252-91.000.
Schupp, Thomas; Traxler, Peter; and Nuesch, Jakob, 4,298,692, Cl. 435-119.000.
Cillario, Renzo, to P. Ferrero & C. S.p.A. Sweet protein food product in the form of a foamed plastic mass. 4,298,625, Cl. 426-572.000.
Circello, Joseph C.: *See—*
Guenthner, Russell W.; Circello, Joseph C.; and Galcik, Anthony J., 4,298,952, Cl. 364-786.000.
Cirillo, Anthony J.: *See—*
Abbott, Robert P.; Chow, Ming-Chwan; Cirillo, Anthony J.; Drechsler, Rudolph C.; and Horney, Lee F., II, 4,298,977, Cl. 370-62.000.
Citizen Watch Company Limited: *See—*
Morokawa, Shigeru; and Koga, Keiichiro, 4,298,971, Cl. 368-204.000.
Nihira, Shohachi, 4,297,944, Cl. 101-93.310.
Saito, Motoyuki, 4,298,973, Cl. 368-276.000.
Watanabe, Minoru; Kume, Kazunari; Ohno, Hideshi; and Tamaru, Munetaka, 4,297,838, Cl. 368-76.000.
CKD Praha, obrovy podnik: *See—*
Homola, Jaroslav; Remajzl, Karel; and Prokes, Milan, 4,298,882, Cl. 357-38.000.
Clark, Mark L.: *See—*
DeFord, Henry S.; and Clark, Mark L., 4,298,496, Cl. 252-359.00A.
Clark, Richard E.: *See—*
Davis, Robert B.; Skelton, John; Clark, Richard E.; and Swanson, Wilbur M., 4,297,749, Cl. 3-1.500.
Clark, Rodney L.; Kidder, Kenneth B.; and Peterson, Gary A., to Honeywell Inc. Dynamically checked safety load switching circuit. 4,298,334, Cl. 431-24.000.
Clarke, David B., to Tenneco Chemicals, Inc. High temperature grease compositions. 4,298,481, Cl. 252-21.000.
Claussen, Nils; and Steeb, Jorg, to Max-Planck-Gesellschaft zur Forderung Wissenschaften e.V. High-strength ceramic bodies. 4,298,385, Cl. 501-105.000.
Clayton, Carl C., to PPG Industries, Inc. Conversion of geothermal energy from subterranean cavities. 4,297,847, Cl. 60-641.300.
Clayton, Kenneth H.; Denniston, Charles D.; Guetersloh, Donald G.; and Hallmann, Melvin H., to General Motors Corporation. Automatic belt tensioner. 4,298,342, Cl. 474-110.000.
Clayton, Ralph S. Method and device for retaining colon cleansing tube in place. 4,297,997, Cl. 128-169.000.
Clopay Corporation: *See—*
Cancio, Leopoldo V.; and Wu, Pai-Chuan, 4,298,647, Cl. 428-167.000.
Clover Mfg. Co., Ltd.: *See—*
Gakiya, Yoshiaki, 4,298,148, Cl. 223-37.000.
Coal Industry (Patents) Limited: *See—*
Randell, Arthur A., 4,298,339, Cl. 432-15.000.
Cochran, Jerry R.; Insinger, Thomas H.; Hollenbach, Gerald E.; Piskorz, Ronald F.; and Smith, Addison M., to Allied Corporation. Purification of phenol with reduced energy consumption. 4,298,765, Cl. 568-754.000.
Cogdill, William F., to Safetran Systems Corporation. Rail handling tongs. 4,298,225, Cl. 294-118.000.
Coin Acceptors, Inc.: *See—*
Niemeyer, John F., 4,298,116, Cl. 194-97.00R.
Colan, Laura P. Footwear system. 4,297,798, Cl. 36-101.000.
Colditz, Johannes K. E., to U.S. Philips Corporation. Neutron generator having a target. 4,298,804, Cl. 376-108.000.
Cole, Jack L., to Nalco Chemical Company. Regeneration of cation ion-exchange polishers. 4,298,477, Cl. 210-674.000.
Cole, Robert J. Die for the extrusion of material in tube form. 4,298,325, Cl. 425-192.00R.
Colgate-Palmolive Company: *See—*
Schreiber, Ronald S., 4,298,493, Cl. 252-135.000.
Wixon, Harold E., 4,298,480, Cl. 252-8.750.
Colles, Joseph H.; and Cooper, James E., Jr., to Hughes Aircraft Company. Non-interlaced to interlaced format video converter. 4,298,888, Cl. 358-140.000.
Collette, John W.; and Tullock, Charles W., to Du Pont de Nemours, E. I., and Company. Fractionable, elastomeric poly (1-butene). 4,298,722, Cl. 526-348.600.
Collins, William J. Sampler for molten material and a component thereof. 4,297,902, Cl. 73-863.330.
Colombo, Paul T., to Nalco Chemical Company. Composition for preventing cold end corrosion in boilers. 4,298,497, Cl. 252-387.000.
Colonna, Jean; Fitremann, Jean-Michel; Genin, Richard; and Sarda, Jean-Paul, to Institut Francais du Petrole. Process and device for injecting a liquid agent used for treating a geological formation in the vicinity of a well bore traversing this formation. 4,298,066, Cl. 166-300.000.
Colsher, James G.: *See—*
Stoub, Everett W.; Colsher, James G.; and Muehllehner, Gerd, 4,298,944, Cl. 364-515.000.
Columbia Machine, Inc.: *See—*
Neth, Walter, 4,298,305, Cl. 414-498.000.
Combustion Engineering, Inc.: *See—*
Anthony, Andrew J.; and Groves, Malcolm D., 4,298,434, Cl. 376-364.000.
Cominco Ltd.: *See—*
Sakauye, Randall T.; Marlow, John V.; Laurie, Gordon H.; and Seymour, Theodore J., 4,297,866, Cl. 72-186.000.
Commerciale de Materiel Aeronautique: *See—*
Marechal, Robert, 4,297,912, Cl. 74-501.00R.
Commissariat a l'Energie Atomique: *See—*
Depierre, Yves; Figuet, Jacques A.; and Lemercier, Guy, 4,298,431, Cl. 176-290.000.
Communications Satellite Corporation: *See—*
Dobyns, Thomas R.; Lindstrom, Richard R.; and Ridings, Robert P., 4,298,979, Cl. 370-104.000.
Compagnie Generale des Etablissements Michelin: *See—*
Herbelleau, Yves; and Flechtner, Charles, 4,298,046, Cl. 152-209.00R.

Compagnie Industrielle Radioelectrique: *See*—
Favre, Nicolas, 4,298,807, Cl. 250-562.000.
Compagnie Internationale Pour l'Informatique CII Honeywell Bull: *See*—
Cardot, Claude R., 4,298,898, Cl. 360-67.000.
Compagnie Internationale Pour l'Informatique Oil-Honeywell Bull (Societe Anonyme): *See*—
Phelps, Edwin H., 4,298,634, Cl. 427-183.000.
Computome Corporation: *See*—
Goldman, Arnold, 4,298,800, Cl. 250-445.00T.
ComSonics, Inc.: *See*—
Shimp, Richard L., 4,298,844, Cl. 330-124.00D.
Concast AG: *See*—
Knell, Bernhard; and Rohrig, Adalbert, 4,298,052, Cl. 164-416.000.
Condouris, George A.; Yelnosky, John; Riley, Richard L.; Won, Chong M.; Douglas, George H.; and Studt, William L., to William H. Rorer, Inc. Method for blocking high frequency nerve stimulation. 4,298,608, Cl. 424-249.000.
Congoleum Corporation: *See*—
Haemer, Laurence F.; and Kimak, Theodore, 4,298,646, Cl. 428-159.000.
Conley, Dwain D.: *See*—
Blaney, Peter O.; Conley, Dwain D.; and Zeigner, Willard L., 4,297,899, Cl. 73-861.580.
Coooco Inc.: *See*—
Hein, Norman W., Jr.; and Oertle, Donald H., 4,297,885, Cl. 73-587.000.
Conrad, Jens: *See*—
Gerhardt, Werner; Wehle, Volker; Syldatk, Andreas; Rogall, Gabriele; Reiffert, Jurgen; and Conrad, Jens, 4,298,568, Cl. 422-16.000.
Consortium fur Elektrochemische Industrie GmbH: *See*—
Kratel, Gunter; Katzer, Hans; Loskot, Stephan; Lang, Wilfried; and Weis, Klaus, 4,298,387, Cl. 501-92.000.
Consumers Glass Company Limited: *See*—
Mancini, Derek V.; and Wright, William J., 4,298,137, Cl. 221-11.000.
Control Data Corporation: *See*—
Norberg, Gayle R.; and Hartung, Lee R., 4,298,860, Cl. 340-825.040.
Cook, Frank T.; and Prier, Donald G., to Dow Chemical Company, The. Process for the production of propylene glycol esters from chloropropyl ethers. 4,298,758, Cl. 560-240.000.
Coombs, Daniel M.; and Boesiger, Dwight D., to Phillips Petroleum Company. Oil purification by deasphalting and magneto-filtration. 4,298,456, Cl. 208-86.000.
Cooper, James E., Jr.: *See*—
Colles, Joseph H.; and Cooper, James E., Jr., 4,298,888, Cl. 358-140.000.
Cooper, John, to Imperial Chemical Industries Limited. Hardenable resin compositions. 4,298,510, Cl. 260-29.20E.
Copeland, Terry M., to Du Pont de Nemours, E. I., and Company. Cathode and cell for lowering hydrogen overvoltage in a chlor-akali cell. 4,298,447, Cl. 204-252.000.
Cordes, Johan H.; and Roes, Wilhelmus F. M., to Akzo N.V. Plasticizer-containing thermocurable composition. 4,298,519, Cl. 260-33.8UA.
Cornell Research Foundation, Inc.: *See*—
Farrell, James J.; and Donohoe, Anthony J., 4,297,813, Cl. 52-2.000.
Corning Glass Works: *See*—
Bailey, Alan C.; and Morrow, Alan J., 4,298,365, Cl. 65-3.120.
Blaszyk, Paul E.; and Murphy, Susan F., 4,298,364, Cl. 65-3.110.
Dorfeld, William G.; and Settzo, Robert J., 4,298,505, Cl. 252-513.000.
Flannery, James E.; Stempin, John L.; and Wexell, Dale R., 4,298,390, Cl. 501-32.000.
Frost, Rodney I., 4,298,328, Cl. 425-376.00A.
Johnson, Lauren K.; and Thompson, David A., 4,298,389, Cl. 501-77.000.
Stempin, John L.; and Wexell, Dale R., 4,298,382, Cl. 75-202.000.
Corrado, Anthony P.; and Marchese, Vincent P., to EMX Controls, Inc. Electronic actuated bleed valve. 4,298,181, Cl. 251-129.000.
Cortese, Richard: *See*—
Theeuwes, Felix; and Cortese, Richard, 4,298,003, Cl. 128-260.000.
Cosper, David R.: *See*—
Breslin, Michael D.; and Cosper, David R., 4,298,428, Cl. 162-73.000.
Costello, Kenneth. Gear box. 4,297,906, Cl. 74-410.000.
Cottrell, Edward D., to Champion International Corporation. Stick separating apparatus with improved radiation counter. 4,298,118, Cl. 198-382.000.
Coules, Ronald A., to Unarco Industries, Inc. Locking stand off. 4,297,769, Cl. 174-138.00D.
Coulter Electronics, Inc.: *See*—
Groves, Michael R.; and Coulter, Wallace H., 4,298,836, Cl. 324-71.0CP.
Coulter, Wallace H.: *See*—
Groves, Michael R.; and Coulter, Wallace H., 4,298,836, Cl. 324-71.0CP.
Counselor, Gary D.; Gerst, Robert C.; and Pennington, Reginald A., to Westran Corporation. Method for assembling molds. 4,298,049, Cl. 164-30.000.
Courson, Richard B., to Almo Manifold and Tool Company. Lock nut. 4,298,297, Cl. 411-262.000.
Covington Brothers Technologies: *See*—
Artzer, Richard F., 4,297,820, Cl. 52-309.110.
Coxon, Andrew C.; Edge, David J.; and Lapper, Mark L. L., to Lever Brothers Company. Process for making detergent compositions. 4,298,491, Cl. 252-95.000.
Crabtree, Grant G.: *See*—
Casson, Harold V.; Crabtree, Grant G.; Kindl, Bruno; and Noonan, Edward B., 4,298,416, Cl. 156-87.000.
Cragoe, Edward J., Jr.; Rooney, Clarence S.; and Williams, Haydn W. R., to Merck & Co., Inc. 4-(Substituted phenyl thiazolyl)-3-hydroxy-3-pyrroline-2,5-diones. 4,298,743, Cl. 548-203.000.
Craig, Philip V. C., to System Concepts, Inc. Cathode ray tube character smoother. 4,298,867, Cl. 340-728.000.
Craig, Roderick I.: *See*—
Kyte, Derek J.; Hansen, Walter I.; and Craig, Roderick I., 4,298,945, Cl. 364-523.000.
Credelle, Thomas L.; and Gange, Robert A., to RCA Corporation. Beam Clean up structure for flat panel display devices. 4,298,819, Cl. 313-422.000.
Critchlow, James A.; and Ozern, Donna U., to Xerox Corporation. Radially varying transmission filter for wide angle copying device. 4,298,275, Cl. 355-71.000.
Crochet, Pierre, to Thomson-CSF. Polarizer for microwave antenna. 4,298,876, Cl. 343-756.000.
Crosby, Gerald D.: *See*—
Torregrossa, Louis O.; Bentvelzen, Jozef M.; Crosby, Gerald D.; Meredith, Michael D.; and Bepple, Henry, 4,298,426, Cl. 162-57.000.
Crouse, Stephen K., to Deere & Company. Transmission shift control linkage for controlling both speed and direction changes with one input motion. 4,297,909, Cl. 74-473.00R.
Crysdale, Donald T., to E Z Paintr Corporation. Paint tray and reservoir. 4,297,762, Cl. 15-257.060.
Cuatrecasas, Pedro: *See*—
Parikh, Indu; and Cuatrecasas, Pedro, 4,298,685, Cl. 435-7.000.
Cunha, Richard A.: *See*—
Riordan, William J.; and Cunha, Richard A., 4,298,335, Cl. 431-25.000.
Curchod, Donald B.; and Sherman, Donald R., to Autotron Equipment Corporation. Wheel balancer transducer mount with improved signal to noise ratio. 4,297,882, Cl. 73-460.000.
Currier Piano Company, Inc.: *See*—
Mayerjak, Robert J., 4,297,937, Cl. 84-430.000.
CX Corporation: *See*—
Putzke, Dwayne H., 4,297,930, Cl. 83-156.000.
Dabby, Franklin W.; and Chesler, Ronald B., to Times Fiber Communications, Inc. Graded start rods for the production of optical waveguides. 4,298,366, Cl. 65-3.120.
Dages, Charles L., to Jerrold Electronics Corp. Digital channel selection and fine tuning system. 4,298,988, Cl. 455-182.000.
Daichiku Company, Limited: *See*—
Oide, Kunimasa; and Ishii, Hideo, 4,298,121, Cl. 206-347.000.
Daigne, Bernard: *See*—
Bernard, Claude R.; Daigne, Bernard; and Girard, Francois, 4,298,797, Cl. 250-372.000.
Daikoku, Takahiro; and Oguro, Tomokatsu, to Hitachi, Ltd. Magnetron device. 4,298,825, Cl. 315-39.510.
Dailey Oil Tool, Inc.: *See*—
Lawrence, James D., 4,298,078, Cl. 175-72.000.
D'Alli, Sebastian J. Process for dry mining phosphate ore utilizing a supersonic gas. 4,298,229, Cl. 299-7.000.
Damiron, Rene; Gillet, Roger; Heuillard, Jean-Francois; and Ruelle, Gilbert, to Alsthom-Atlantique. Gas cooled rotor for an electric machine. 4,298,812, Cl. 310-61.000.
Damon Corporation: *See*—
Sodickson, Lester A.; and Lim, Franklin, 4,298,345, Cl. 23-230.00R.
D'Andrade, Bruce M., to Arco Industries Ltd. Tethered toy for orbital movement. 4,297,808, Cl. 46-52.000.
D'Andrea, Mark J.: *See*—
Ronel, Samuel H.; D'Andrea, Mark J.; Dobelle, William H.; Klomp, Gregory F.; and Hashiguchi, Hiroshi, 4,298,002, Cl. 128-260.000.
Danfoss A/S: *See*—
Kyster, Erik, 4,297,845, Cl. 60-384.000.
Daniel, Chelliah; and Bursky, Phyllis L., to Ashland Oil, Inc. Catalytic oxydehydrogenation process. 4,298,755, Cl. 560-214.000.
Daniel, Jean-Claude; Grossoleil, Jacques; and Roullet, Robert, to Rhone-Poulenc Industries. Method of applying a binder having less than 0.5% water soluble compounds to tufted floor coverings. 4,298,637, Cl. 427-372.200.
Danielsson, Knut O.: *See*—
Ranzen, Carl-Olov B.; and Danielsson, Knut O., 4,298,425, Cl. 162-18.000.
Dantzer, Elonne: *See*—
Goldfarb, Adolph E.; and Dantzer, Elonne, 4,298,915, Cl. 362-124.000.
Dantzig, Jonathan A.; and Tyler, Derek E., to Swiss Aluminium Ltd. Apparatus for inline degassing and filtration of molten metal. 4,298,187, Cl. 266-217.000.
Daransky, Thomas E.; and Dickinson, John D., to Westinghouse Electric Corp. Method and system for controlling the fluid level in a drain tank. 4,298,019, Cl. 137-9.000.
Dartmouth College: *See*—
Walsh, John E., 4,298,824, Cl. 315-4.000.
D'Atre, John D.: *See*—
Espelage, Paul M.; and D'Atre, John D., 4,298,831, Cl. 318-112.000.

Dauben, William G.; Kessel, Carl R.; and Takemura, Kazuo H., to University of California, Regents of the. Cycloadduct precursors of cantharidin and method. 4,298,752, Cl. 549-42.000.
Davey, John E.; and Christou, Aristos. Ion-implanted evaporated germanium layers as n^+ contacts to GaAs. 4,298,403, Cl. 148-1.500.
Davids, Ralf: *See*—
Bauer, Erwin; Davids, Ralf; Gotz, Gerhard; Jussen, Hilmar; Arndt, Heinrich; Kummel, Louis; Morhart, Rudolf; and Pollak-Banda, Erich, 4,297,917, Cl. 74-665.00G.
Davies, Irving W., to Jaco Manufacturing Company. Tube coupling. 4,298,222, Cl. 285-341.000.
Davis, Dean T., to IRD Mechanalysis, Inc. Method and apparatus for generating a digital representation of the instantaneous angular position of a rotating body and for generating rectangular coordinate equivalents thereof. 4,298,948, Cl. 364-603.000.
Davis, Paul, to Sweetheart Plastics, Inc. Integral tray and cover with snap lock. 4,298,133, Cl. 220-306.000.
Davis, Richard F., to Dayco Corporation. Curved mandrel for curing polymeric hose and method. 4,298,330, Cl. 425-392.000.
Davis, Robert B.; Skelton, John; Clark, Richard E.; and Swanson, Wilbur M., to Albany International Corp.; and Washington University. Heart valve prosthesis. 4,297,749, Cl. 3-1.500.
Davis, Robert H.; and Herd, Richard S., to Mobil Oil Corporation. Metal forming lubricants. 4,298,483, Cl. 252-32.7HC.
Davister, Armand L.; and Houghtaling, Samuel V., to Davy Powergas, Inc. Process for manufacturing phosphoric acid. 4,298,583, Cl. 423-167.000.
Davy McKee (Minerals & Metals) Limited: *See*—
Atkinson, Donald A.; and McCulloch, Colin F., 4,298,191, Cl. 266-165.000.
Davy Powergas, Inc.: *See*—
Davister, Armand L.; and Houghtaling, Samuel V., 4,298,583, Cl. 423-167.000.
Dayco Corporation: *See*—
Davis, Richard F., 4,298,330, Cl. 425-392.000.
Dearth, Miles B. Attachment for a vehicle dome light. 4,298,912, Cl. 362-66.000.
de Bont, Marinus R. J.: *See*—
van der Veen, Jan; Kivits, Petrus J.; and de Bont, Marinus R. J., 4,298,975, Cl. 369-94.000.
Decker, Forrest W.; and Peternel, Jacob R., to PPG Industries, Inc. Method of and apparatus for determining number of sheets in a stack. 4,298,790, Cl. 235-92.0SB.
Deconinck, Hugo F.: *See*—
Stievenart, Emile F.; and Deconinck, Hugo F., 4,298,272, Cl. 355-28.000.
DeCristofaro, Nicholas J.; Freilich, Alfred; and Nathasingh, Davidson M., to Allied Chemical Corporation. Method for making iron-metalloid amorphous alloys for electromagnetic devices. 4,298,409, Cl. 148-108.000.
Deemer, W. Robert: *See*—
McCarter, Louis N., III; Deemer, W. Robert; Meeker, Robert G.; Weaver, Harry B.; and Smith, John W., 4,298,287, Cl. 366-4.000.
Deep Oil Technology, Inc.: *See*—
Horton, Edward E.; and Walker, Raymond W., 4,297,965, Cl. 114-265.000.
Deere & Company: *See*—
Crouse, Stephen K., 4,297,909, Cl. 74-473.00R.
Hutchison, Wayne R., 4,298,108, Cl. 192-13.00R.
Defibaugh, George R.: *See*—
Swengel, Robert C., Jr.; Fortuna, Jon A.; and Defibaugh, George R., 4,298,243, Cl. 339-276.00F.
Defibrator Aktiebolag: *See*—
Ranzen, Carl-Olov B.; and Danielsson, Knut O., 4,298,425, Cl. 162-18.000.
DeFord, Henry S.; and Clark, Mark L., to United States of America, Energy. Highly stable aerosol generator. 4,298,496, Cl. 252-359.00A.
De Fries, Donald. Combination portable storage container and head rest. 4,298,103, Cl. 190-42.000.
DeFusco, Douglas F., to B. B. Greenberg Company. Automatic soldering machine. 4,298,134, Cl. 228-49.00R.
Degner, Dieter; Siegel, Hardo; and Hannebaum, Heinz, to BASF Aktiengesellschaft. Preparation of 4-tert.-butylbenzaldehyde. 4,298,438, Cl. 204-78.000.
Dehli, Diane M., to General Electric Company. Retractable handle for air valve heat pump. 4,297,853, Cl. 62-325.000.
Dejob, Roger M.; and Tardivon, Marcel P., to Etat Francais represente par le Delegue Ministeriel pour l'Armement. Jettisoning and flotation device for a suspended load, particularly an underwater listening body. 4,298,963, Cl. 367-4.000.
Dellinger, Bill: *See*—
Stirtz, Ronald H.; and Dellinger, Bill, 4,297,796, Cl. 36-28.000.
Dennis, Charles L., to Mobil Oil Corporation. Regulator for a pulsed neutron source. 4,298,805, Cl. 376-111.000.
Denniston, Charles D.: *See*—
Clayton, Kenneth H.; Denniston, Charles D.; Guetersloh, Donald G.; and Hallmann, Melvin H., 4,298,342, Cl. 474-110.000.
De Paulet, Andre C.: *See*—
Nicolas, Jean C.; Terouanne, Beatrice; Descomps, Bernard; and De Paulet, Andre C., 4,298,686, Cl. 435-7.000.
Depierre, Yves; Figuet, Jacques A.; and Lemercier, Guy, to Commissariat a l'Energie Atomique. Device for the thermal protection of an internal structure of a liquid metal cooled fast reactor. 4,298,431, Cl. 176-290.000.
de Rigal, Jean P.: *See*—
Leveque, Jean-Luc; Rasseneur, Laurent; de Rigal, Jean P.; and Gras, Gilbert, 4,297,884, Cl. 73-579.000.
Deroker Equipment Ltd.: *See*—
Djukastein, Klaus, 4,298,464, Cl. 209-310.000.
DeSantis, Raymond P.; and Puffer, Herbert J., Jr., to PTX-Pentronix, Inc. Apparatus and method for compacting prismatic or pyramidal articles from powder material. 4,298,563, Cl. 264-111.000.
Descoles, Jean, to Aktiebolaget Svenska Flaktfabriken. Method of and device for cleansing in a fibre blanket manufacturing plant. 4,298,367, Cl. 65-4.100.
Descomps, Bernard: *See*—
Nicoles, Jean C.; Terouanne, Beatrice; Descomps, Bernard; and De Paulet, Andre C., 4,298,686, Cl. 435-7.000.
Deutsche Industrieanlagen GmbH Werk Hermann Kolb Maschinenfabrik Koeln: *See*—
Russ, Peter; and Jansen, Heinz, 4,297,926, Cl. 82-9.000.
DeVierno, Richard A. Separator and storage box. 4,298,157, Cl. 229-35.000.
Devore, Ernest W.: *See*—
Arter, Nelson K.; Devore, Ernest W.; Wills, Arthur B.; and Zelenka, Leslie R., 4,298,897, Cl. 360-39.000.
Diab, Khaled M. Method and system for 5-bit encoding of complete Arabic-Farsi languages. 4,298,773, Cl. 178-30.000.
Diamond International Corporation: *See*—
Reifers, Richard F.; and Lord, Henry A., 4,298,156, Cl. 229-2.50R.
Diamond Shamrock Corporation: *See*—
Baczek, Stanley K.; and McCain, G. Howard, 4,298,697, Cl. 521-27.000.
Dick, Calvin; and Malone, Patrick C., to Dick, Calvin. Convertible furniture. 4,297,752, Cl. 5-52.000.
Dickinson, John D.: *See*—
Daransky, Thomas E.; and Dickinson, John D., 4,298,019, Cl. 137-9.000.
Dickinson, William B.: *See*—
Lesher, George Y.; and Dickinson, William B., 4,298,609, Cl. 424-250.000.
Di Drusco, Giovanni: *See*—
Mayr, Adolfo; Galli, Paolo; Susa, Ermanno; Di Drusco, Giovanni; and Giachetti, Ettore, 4,298,718, Cl. 526-125.000.
Diederich, Ronald E.: *See*—
Howells, Anthony P.; Diederich, Ronald E.; and Angehrn, Jorg A., 4,297,879, Cl. 73-152.000.
Dienst, Manfred: *See*—
Anders, Dietmar; and Dienst, Manfred, 4,298,322, Cl. 425-147.000.
DiFulvio, Anthony P.; and Smith, Michael R., to Eastman Kodak Company. Incubator including cover means for an analysis slide. 4,298,571, Cl. 422-65.000.
DiGiacomo, Peter M.; and Dines, Martin B., to Occidental Research Corporation. Layered or amorphous acyclic organometallic inorganic polymers. 4,298,723, Cl. 528-271.000.
DiGiulio, Adolph V.; and Bauer, Jack N., to ARCO Polymers, Inc. Fire-retardant imide copolymers. 4,298,703, Cl. 521-88.000.
DiGiulio, Adolph V.; and Bauer, Jack N., to ARCO Polymers, Inc. Fire-retardant monocarboxylic acid amide copolymers. 4,298,704, Cl. 521-88.000.
DiGiulio, Adolph V., to Arco Polymers, Inc. Rubber-modified fire-retardant imide copolymers. 4,298,705, Cl. 521-88.000.
Dines, Martin B.: *See*—
DiGiacomo, Peter M.; and Dines, Martin B., 4,298,723, Cl. 528-271.000.
Dinger, Edward H.; and Ritter, Allen M., to General Electric Company. Semiconductor device conduction state detection circuit. 4,298,810, Cl. 307-252.00N.
Dishal, Milton, to International Telephone and Telegraph Corporation. Signal envelope detecting system. 4,298,841, Cl. 328-117.000.
Distler, Dieter; Mueller, Margarete; Bubam, Hans-Georg; and Addicks, Guenther, to BASF Aktiengesellschaft. Binder for paper-coating compositions. 4,298,513, Cl. 260-29.70H.
Dixie-Narco, Inc.: *See*—
Oden, Kenneth W., 4,298,138, Cl. 221-115.000.
Djukastein, Klaus, to Deroker Equipment Ltd. Rock separator. 4,298,464, Cl. 209-310.000.
Dobelle, William H.: *See*—
Ronel, Samuel H.; D'Andrea, Mark J.; Dobelle, William H.; Klomp, Gregory F.; and Hashiguchi, Hiroshi, 4,298,002, Cl. 128-260.000.
Dobyns, Thomas R.; Lindstrom, Richard R.; and Ridings, Robert P., to Communications Satellite Corporation. Decoding TIM bus structure. 4,298,979, Cl. 370-104.000.
Dockner, Toni; Kempe, Uwe; Krug, Herbert; Magnussen, Peter; Praetorius, Werner; and Szymanski, Hans J., to BASF Aktiengesellschaft. Preparation of 2-imidazolines. 4,298,748, Cl. 548-347.000.
Dr. Ing. h.c.F. Porsche AG: *See*—
Soffge, Friedbelm; and Weigele, Hans, 4,297,759, Cl. 14-2.600.
Doi, Yoshikazu; Uchida, Takaaki; and Sakai, Yutaka, to Fuji Photo Optical Co., Ltd. Rear stop type lens system. 4,298,252, Cl. 350-470.000.
Dominion Engineering Works Limited: *See*—
Shaver, Marvin B.; Vadas, Robert M.; and Stock, Norman A., 4,298,113, Cl. 192-0.094.
Dompas, John; and Petry, Charles J., to Metallurgie Hoboken-Overpelt. Casting belts for machines for the continuous casting of metals. 4,298,053, Cl. 164-429.000.

Domtar Inc.: *See—*
Limonchik, Abe; and Richardson, Neil G., 4,298,396, Cl. 106-273.00R.
Donohoe, Anthony J.: *See—*
Farrell, James J.; and Donohoe, Anthony J., 4,297,813, Cl. 52-2.000.
Donovan, William F., to United States of America, Army. Projectile. 4,297,948, Cl. 102-473.000.
Dorawala, Tansukhlal G.; and Kerr, Edwin R., to Texaco Inc. Coal liquefaction. 4,298,452, Cl. 208-8.0LE.
Dorfeld, William G.; and Settzo, Robert J., to Corning Glass Works. Resistor composition and method of manufacture thereof. 4,298,505, Cl. 252-513.000.
Dorina Nahmaschinen GmbH: *See—*
Meier, Willi, 4,297,956, Cl. 112-158.00A.
Dorpmund, Heinz; and Oberpichler, Gerd, to Volkswagenwerk Aktiengesellschaft. Control system for an automatic vehicle transmission. 4,298,109, Cl. 192-0.044.
Douglas, Donald A.; Menashi, Jameel; and Rappas, Alkis S., to Cabot Corporation. Process for recovering chromium, vanadium, molybdenum and tungsten values from a feed material. 4,298,581, Cl. 423-58.000.
Douglas, Donald A.: *See—*
Menashi, Jameel; Rappas, Alkis S.; and Douglas, Donald A., 4,298,582, Cl. 423-58.000.
Douglas, George H.: *See—*
Condouris, George A.; Yelnosky, John; Riley, Richard L.; Won, Chong M.; Douglas, George H.; and Studt, William L., 4,298,608, Cl. 424-249.000.
Dow Chemical Company, The: *See—*
Bradford, Larry L.; Jordan, David R.; and Williams, Kenneth W., 4,298,557, Cl. 264-51.000.
Cook, Frank T.; and Prier, Donald G., 4,298,758, Cl. 560-240.000.
Ginter, Sally P.; Pawloski, Chester E.; and Stevens, Violete L., 4,298,709, Cl. 521-169.000.
Orillion, Michael T., 4,298,657, Cl. 428-416.000.
Pawloski, Chester E., 4,298,602, Cl. 424-200.000.
Dow Corning Corporation: *See—*
Baney, Ronald H.; and Gaul, John H., Jr., 4,298,558, Cl. 264-65.000.
Baney, Ronald H.; and Gaul, John H., Jr., 4,298,559, Cl. 264-65.000.
Dowbenko, Rostyslaw: *See—*
Schimmel, Karl F.; Seiner, Jerome A.; Dowbenko, Rostyslaw; and Christenson, Roger M., 4,298,511, Cl. 260-29.2TN.
Doyle, Ronald J.; Keller, Kenneth F.; and Schaefer, Robert L., to Research Corporation. Gonorrhea diagnostic test. 4,298,689, Cl. 435-34.000.
Dragerwerk Aktiengesellschaft: *See—*
Eckstein, Wolfgang; and Rabenecker, Horst, 4,298,010, Cl. 128-719.000.
Draloric Electronic GmbH: *See—*
Weigel, Helmut; and Wollenschlager, Werner, 4,298,902, Cl. 361-328.000.
Drechsler, Rudolph C.: *See—*
Abbott, Robert P.; Chow, Ming-Chwan; Cirillo, Anthony J.; Drechsler, Rudolph C.; and Horney, Lee F., II, 4,298,977, Cl. 370-62.000.
Dressell, Richard G., Jr.; and Heideman, Robert J., to Enertrols, Inc. Shock absorber. 4,298,101, Cl. 188-285.000.
Dresser Industries, Inc.: *See—*
Winsor, Jack O.; and Patrick, Dennis J., 4,298,076, Cl. 173-164.000.
Drexler, Jerome: *See—*
Bouldin, Eric W.; and Drexler, Jerome, 4,298,684, Cl. 430-616.000.
Drexler Technology Corporation: *See—*
Bouldin, Eric W.; and Drexler, Jerome, 4,298,684, Cl. 430-616.000.
Druffel, James B., to Racor Industries, Inc. Fuel filter and water separator apparatus. 4,298,465, Cl. 210-304.000.
Dudley, Robert H., to Reclamet, Inc. Air blade construction for chip wringer. 4,298,476, Cl. 210-373.000.
Duembgen, Gerd: *See—*
Engelbach, Heinz; Krabetz, Richard; Duembgen, Gerd; Willersinn, Carl-Heinz; and Beitelschmidt, Walter, 4,298,763, Cl. 568-479.000.
Dufner, Donald E. Bean harvester. 4,297,830, Cl. 56-13.600.
Dufour, Daniel L., to Monsanto Company. Styrenic tetrapolymer. 4,298,716, Cl. 526-65.000.
Duhaime, Michael L., to General Motors Corporation. Control valve mechanism for a power transmission. 4,298,105, Cl. 192-3.230.
Dunkers, Karl R. Apparatus for equalization of overflow water and urban runoff in receiving bodies of water. 4,298,471, Cl. 210-170.000.
Dunwald, Willi: *See—*
Lewalter, Jurgen; Rottmaier, Ludwig; Merten, Rudolf; Zecher, Wilfried; Dunwald, Willi; and Schulte, Bernhard, 4,298,515, Cl. 260-30.40N.
Du Pont de Nemours, E. I., and Company: *See—*
Collette, John W.; and Tullock, Charles W., 4,298,722, Cl. 526-348.600.
Copeland, Terry M., 4,298,447, Cl. 204-252.000.
Fitzgerald, Patrick H., 4,298,398, Cl. 106-288.00Q.
Keller, Charles T., 4,298,329, Cl. 425-382.00N.
Lepone, Gerald E., 4,298,613, Cl. 424-274.000.
Lindsey, Richard V., Jr.; and Prichard, William W., 4,298,531, Cl. 260-346.110.
McGill, Robert N., 4,298,546, Cl. 260-465.900.
McKeever, Mark R., 4,298,678, Cl. 430-281.000.
Seney, John S., 4,297,772, Cl. 28-257.000.
Sommerfeld, Eugene G.; and Noyes, Paul R., 4,298,724, Cl. 528-302.000.
Taylor, Barry E., 4,298,407, Cl. 148-24.000.
Yang, Hung H., 4,298,565, Cl. 264-181.000.
Dupont, Michel: *See—*
Malafosse, Jean; Girou, Andre; Olivier, Herve; and Dupont, Michel, 4,298,585, Cl. 423-279.000.
Dupressoir, Albert; and Salvat, Francois, to Thomson-CSF. Radiating source formed by a dipole excited by a waveguide and an electronically scanning antenna comprising such sources. 4,298,878, Cl. 343-795.000.
Duracell International Inc.: *See—*
Moses, Peter R., 4,298,663, Cl. 429-50.000.
Przybyla, Franciszek J.; and Rossler, Eleanor J., 4,298,506, Cl. 252-518.000.
Durand, Jean-Pierre; and Petroff, Nicole, to Institut Francais du Petrole. Process for manufacturing impregnated silicas and the use of these silicas for analysis or purification of industrial products. 4,298,472, Cl. 210-198.200.
Duvall, William S.; and English, William K., to Xerox Corporation. Data processing system with character sort apparatus. 4,298,957, Cl. 364-900.000.
Dwyer Instruments, Inc.: *See—*
Buchanan, Steven O.; and Phillips, James W., 4,297,889, Cl. 73-747.000.
Dykes, James R. Lock cover. 4,297,861, Cl. 70-55.000.
Dykman, Arkady S.: *See—*
Batalin, Oleg E.; Dykman, Arkady S.; Osadchenko, Alexandr I.; Balkhanova, Galina F.; Belgorodsky, Izrail M.; Nevstruev, Vladimir I.; Radionov, Valery A.; Tulchinsky, Eduard A.; Belyaev, Valentin M.; Smolin, Jury I.; Breiman, Mark I.; Orlyansky, Vitaly V.; Zhirnov, Nikolai Y.; Galibin, Nikolai V.; Troitsky, Adrian P.; and Kovalenko, Vladimir V., 4,298,503, Cl. 252-432.000.
Dynamics Research Corporation: *See—*
Thomas, Lowell E., 4,298,436, Cl. 204-15.000.
Dynapol: *See—*
Parkinson, Thomas M.; Brown, Joseph P.; and Wingard, Robert E., Jr., 4,298,595, Cl. 424-78.000.
Dynatech - UZ, Inc.: *See—*
Hoffman, Jerzy, 4,298,847, Cl. 333-105.000.
E Z Paintr Corporation: *See—*
Crysdale, Donald T., 4,297,762, Cl. 15-257.060.
Eagle-Picher Industries, Inc.: *See—*
Yates, George A., 4,298,073, Cl. 173-22.000.
Earl, T. Desmond, to Textron Inc. Airplane wing and undercarriage construction. 4,298,175, Cl. 244-13.000.
Earle, Roland D., to Prime Manufacturing Company. Methanol automotive fuel. 4,298,351, Cl. 44-53.000.
Eastman Kodak Company: *See—*
Bishop, John F., 4,298,682, Cl. 430-533.000.
DiFulvio, Anthony P.; and Smith, Michael R., 4,298,571, Cl. 422-65.000.
Lu, Chen-i, 4,298,650, Cl. 428-306.000.
Easton, Anthony, to National Solar Corporation. Solar collector device. 4,297,991, Cl. 126-448.000.
Eberst, Dale S.: *See—*
Stroup, John F.; Nypaver, Leonard P.; and Eberst, Dale S., 4,297,901, Cl. 73-862.530.
Eckstein, Wolfgang; and Rabenecker, Horst, to Dragerwerk Aktiengesellschaft. Breathing alcohol testing device. 4,298,010, Cl. 128-719.000.
Econ Scrap Shear Co.: *See—*
Lessard, Kenneth R., 4,297,931, Cl. 83-397.000.
Eder, Ulrich: *See—*
Neef, Gunter; Eder, Ulrich; Haffer, Gregor; and Sauer, Gerhard, 4,298,538, Cl. 260-397.400.
Edge, David J.: *See—*
Coxon, Andrew C.; Edge, David J.; and Lapper, Mark L. L., 4,298,491, Cl. 252-95.000.
Edo-Aire Mitchell: *See—*
Nixon, John M., 4,298,843, Cl. 330-9.000.
Edwards, John W.; and Smith, John W., to United States of America, National Aeronautics and Space Administration. Apparatus for damping operator induced oscillations of a controlled system. 4,298,833, Cl. 318-561.000.
Ehmann, William J.; and Johnson, Walter E., Jr., to SCM Corporation. Process for the oxidation of primary allylic and benzylic alcohols. 4,298,762, Cl. 568-433.000.
EIC Corporation: *See—*
Makrides, Alkis C., 4,298,584, Cl. 423-242.000.
Eichelberger, Charles W.; Thomas, Charles E.; and Wojnarowski, Robert J., to General Electric Company. Oven having a cavity heated by at least one monolithic integrated heat source. 4,298,789, Cl. 219-406.000.
Ekelund, Christer. Method and apparatus for applying warp threads to hand looms. 4,298,122, Cl. 206-389.000.
El Paso Polyolefins Company: *See—*
Allan, John L. H.; Finestone, Arnold B.; and Roderick, John J., 4,298,521, Cl. 260-45.90R.
Electroplating Engineers of Japan, Limited: *See—*
Ando, Masato; Yamamoto, Kenji; and Taniguchi, Kazuhiro, 4,298,446, Cl. 204-224.00R.
Elfgen, Gerd. Milling tool for a rotating milling cylinder. 4,298,233, Cl. 299-91.000.

Elias, William H., to Sangamo Weston, Inc. Capacitor and element therefor. 4,298,906, Cl. 361-433.000.
Elijah, Jerry D. Method and apparatus for braking torque amplifier. 4,298,106, Cl. 192-3.570.
Eljutin, Alexandr V.: *See—*
Bochkarev, Ellin P.; Prokopov, Igor V.; Eljutin, Alexandr V.; Belsky, Arkady A.; Baryshnikova, Svetlana M.; Nasyrov, Nail Z.; Novikov, Nikolai A.; Khairulin, Edige R.; Zvyagin, Mikhail S.; Abrjutin, Vladimir N.; Konstantinova, Ljubov I.; Ljubimova, Nina A.; and Gorbacheva, Nadezhda S., 4,298,380, Cl. 75-101.0BE.
Elkin, Itzhak: *See—*
Alper, Yekutiel; Elkin, Itzhak; Wolf, Itzhak; Mihai, Gabriel; and Antler, Aharon, 4,297,832, Cl. 56-328.00R.
Elliott Turbomachinery Limited: *See—*
Williams, Tecwyn L., 4,298,060, Cl. 165-169.000.
Ellis, Stafford M., to General Electric Company Limited, The. Electronic component cooling arrangements. 4,298,903, Cl. 361-386.000.
Elsie, Lawrence E.: *See—*
Krieger, Aaron J.; and Elsie, Lawrence E., 4,297,828, Cl. 53-282.000.
Eltra Corporation: *See—*
Kyte, Derek J.; Hansen, Walter I.; and Craig, Roderick I., 4,298,945, Cl. 364-523.000.
Emerson Electric Co.: *See—*
Gryn, Felix J., 4,297,895, Cl. 73-861.120.
May, George H., 4,297,896, Cl. 73-861.120.
Young, James E., 4,297,897, Cl. 73-861.120.
Emery, Maurice M., to Smith International, Inc. Circulation valve for in-hole motors. 4,298,077, Cl. 175-65.000.
EMI Limited: *See—*
Oliver, Colin C., 4,298,799, Cl. 250-445.00T.
Emmett, James R., to Northern Engineering Industries, Ltd. Regeneration of ion exchange materials. 4,298,696, Cl. 521-26.000.
EMX Controls, Inc.: *See—*
Corrado, Anthony P.; and Marchese, Vincent P., 4,298,181, Cl. 251-129.000.
Endo, Hisao: *See—*
Oi, Nobuhiro; Aoki, Bunya; Shinozaki, Teizo; Moro, Kanji; Matsunaga, Isao; Noto, Takao; Nebashi, Toshiyuki; Harada, Yusuke; Endo, Hisao; Kimura, Takao; Okazaki, Hiroshi; Ogawa, Haruki; and Shindo, Minoru, 4,298,605, Cl. 424-246.000.
Energy Detection Company: *See—*
Moffet, John N.; Moffet, John D.; and Ragsdill, David L., 4,298,572, Cl. 422-68.000.
Enertrols, Inc.: *See—*
Dressell, Richard G., Jr.; and Heideman, Robert J., 4,298,101, Cl. 188-285.000.
Engelbach, Heinz; Krabetz, Richard; Duembgen, Gerd; Willersinn, Carl-Heinz; and Beitelschmidt, Walter, to BASF Aktiengesellschaft. Preparation of α,β-olefinically unsaturated aldehydes of 3 or 4 carbon atoms. 4,298,763, Cl. 568-479.000.
Engelsberger, Georg: *See—*
Schinabeck, Anton; Zeller, Norbert; Lindner, Tassilo; Engelsberger, Georg; and Riedle, Rudolf, 4,298,753, Cl. 556-415.000.
English Clays Lovering Pochin & Co., Ltd.: *See—*
Watson, James H. P.; and Jones, James P. B., 4,298,478, Cl. 210-695.000.
English Electric Valve Company: *See—*
Hendry, Eric D., 4,298,821, Cl. 313-477.00R.
English, George J.; Levin, Robert E.; and Fohl, Timothy, to GTE Products Corporation. Flashlamp disk containing internal reflectors. 4,298,908, Cl. 362-14.000.
English, William K.: *See—*
Duvall, William S.; and English, William K., 4,298,957, Cl. 364-900.000.
Ennis, Colin S.: *See—*
Laws, Derek R. J.; Bath, Nigel A.; Ennis, Colin S.; Pickett, John A.; and Wheldon, Alfred G., 4,298,626, Cl. 426-600.000.
Envirotronics: *See—*
Richardson, John G.; and Soldat, Robert W., 4,298,163, Cl. 236-46.00R.
Ephithite, Henry J., to Wilkinson Rubber Linatex Limited. Centrifuge. 4,298,161, Cl. 233-7.000.
Epper, Wolfgang; and Heckman, Wolfgang, to Klockner-Humboldt-Deutz AG. Solid sleeve worm centrifuge. 4,298,159, Cl. 233-7.000.
Erickson Tool Company: *See—*
Benjamin, Milton L.; and Miles, Wilbur N., 4,298,208, Cl. 279-91.000.
Ericson Manufacturing Company, The: *See—*
Mahnke, Earl A.; and Zoller, Christopher J., 4,298,864, Cl. 340-657.000.
Eriksson, Carl L.: *See—*
Grahn, Sven-Ake; Roland, Magnus A.; and Eriksson, Carl L., 4,297,911, Cl. 280-777.000.
Eriksson, Lars O. Device at unfoldable escape-ladder. 4,298,092, Cl. 182-70.000.
Eriksson, Lars O. Escape-ladder. 4,298,097, Cl. 182-198.000.
ESPE Fabrik pharmazeutischer Praparate GmbH: *See—*
Herold, Wolf-Dietrich, 4,298,806, Cl. 250-504.00H.
Espelage, Paul M.; and D'Atre, John D., to General Electric Company. Method and apparatus for operating a plurality of parallel coupled, arbitrarily loaded induction machines from a single controlled current inverter. 4,298,831, Cl. 318-112.000.
Essilor International, "Cie Generale d'Optique": *See—*
Tagnon, Luc A., 4,298,253, Cl. 351-17.000.
Etat Francais represente par le Delegue Ministeriel pour l'Armement: *See—*
Dejob, Roger M.; and Tardivon, Marcel P., 4,298,963, Cl. 367-4.000.
Etoh, Kunihiko; Ishigaki, Tamotsu; and Niwa, Kuniyuki, to Toyoda-Koki Kabushiki-Kaisha. Data transfer system for data exchange between two operation processors. 4,298,928, Cl. 364-200.000.
Euler, August H. L.; and Beziac, Gilbert F. A., to Societe Nationale Industrielle Aerospatiale. Method of manufacturing a helicopter rotor blade. 4,298,417, Cl. 156-228.000.
Evans, William P.; and Leger, Violeta Z., to Union Carbide Corporation. Cathode comprising the reaction product of Bi_2O_3 and WO_3. 4,298,665, Cl. 429-197.000.
Evertz, Egon; and Seybold, R., to Evertz, Egon. Method of repairing steelworks ingot moulds and cast-iron steelworks ingot mould. 4,298,180, Cl. 249-135.000.
Extel Corp.: *See—*
Marciniec, Edmund T., 4,298,786, Cl. 219-216.000.
Exxon Production Research Company: *See—*
Rickenbacker, James E., 4,298,969, Cl. 367-76.000.
Exxon Research and Engineering Company: *See—*
Aldridge, Clyde L.; and Bearden, Roby, Jr., 4,298,454, Cl. 208-10.000.
Oswald, Alexis A.; Jermansen, Torris G.; Westner, Andrew A.; and Huang, I-Der, 4,298,541, Cl. 260-429.00R.
Ezaki, Norio: *See—*
Amano, Shoichi; Miyadoh, Shinji; Takahashi, Saeko; Ezaki, Norio; Niwa, Tomizo; and Yamada, Yujiro, 4,298,599, Cl. 424-119.000.
Fahmy, Mohamed A. H.; and Fukuto, Tetsuo R., to University of California, The Regents of the. N-Alkylthio- and N-arylthiosulfinylcarbamate esters. 4,298,527, Cl. 260-340.50R.
Fahmy, Mohamed A. H.; and Fukuto, Tetsuo R., to University of California, Regents of. Symmetrical and asymmetrical sulfinyl-dicarbamates. 4,298,617, Cl. 424-298.000.
Fairchild Camera & Instrument Corp.: *See—*
Hingarh, Hemraj K., 4,298,402, Cl. 148-1.500.
Falcon, Wayne J., to Halliburton Services. Apparatus and method for protecting a transducer. 4,297,891, Cl. 73-756.000.
Farina, Peter R.; and Grattan, James A., to Union Carbide Corporation. Folic acid derivatives. 4,298,735, Cl. 544-257.000.
Farmers Pride Cheese, Inc.: *See—*
Peterson, Harold J., 4,298,618, Cl. 426-36.000.
Farmos-Yhtma OY: *See—*
Koskenniska, Lasse A., 4,298,539, Cl. 260-397.250.
Farrell, James J.; and Donohoe, Anthony J., to Cornell Research Foundation, Inc. Multiple layer insulation cover. 4,297,813, Cl. 52-2.000.
Faudi, Rudi: *See—*
Granholm, Carl; and Faudi, Rudi, 4,298,792, Cl. 235-375.000.
Favre, Nicolas, to Compagnie Industrielle Radioelectrique. Process for inspecting the physical state of a printed document and an installatin for putting the process into operation. 4,298,807, Cl. 250-562.000.
Feilchenfeld, Michal M., to Westingbouse Electric Corp. Digital video line delay circuit. 4,298,859, Cl. 340-146.30Z.
Fend, Fritz: *See—*
Stahl, Karl-Heinz; Fend, Fritz; and Stahl, Werner, 4,298,167, Cl. 239-129.000.
Fernstrom, John D.; and Sved, Alan F., to Massachusetts Institute of Technology. Process for reducing blood pressure in animals. 4,298,611, Cl. 424-261.000.
Fierro Esponja, S.A.: *See—*
MacKay, Patrick W., 4,298,190, Cl. 266-156.000.
Figuet, Jacques A.: *See—*
Depierre, Yves; Figuet, Jacques A.; and Lemercier, Guy, 4,298,431, Cl. 176-290.000.
Filer and Stowell Company, The: *See—*
Hansel, Sydney; and Baker, Thomas N., 4,298,044, Cl. 144-176.000.
Filipowicz, Edwin A., to Griffith-Hope Company. Adjustable holder. 4,298,126, Cl. 211-50.000.
Finestone, Arnold B.: *See—*
Allan, John L. H.; Finestone, Arnold B.; and Roderick, John J., 4,298,521, Cl. 260-45.90R.
Firestone Tire & Rubber Company, The: *See—*
Hergenrother, William L.; Schwarz, Richard A.; Ambrose, Richard J.; and Hayes, Robert A., 4,298,707, Cl. 521-95.000.
Fischer, Carlin P. Insulated gauge rod and method of making the same. 4,297,787, Cl. 33-144.000.
Fischer & Porter Co.: *See—*
Herzl, Peter J., 4,297,898, Cl. 73-861.220.
Fischer, Reinhold S.: *See—*
MacKenzie, Michael C.; and Fischer, Reinhold S., 4,298,312, Cl. 415-118.000.
Fischer, Rudolf, to Siemens Aktiengesellschaft. Programmable memory protection logic for microprocessor systems. 4,298,934, Cl. 364-200.000.
Fisher, Harold E.: *See—*
Butler, G. Theodore; Porter, Travis G.; and Fisher, Harold E., 4,298,337, Cl. 431-285.000.
Fitremann, Jean-Michel: *See—*
Colonna, Jean; Fitremann, Jean-Michel; Genin, Richard; and Sarda, Jean-Paul, 4,298,066, Cl. 166-300.000.
Fitzgerald, Patrick H., to Du Pont de Nemours, E. I., and Company. Process for converting premilled crude quinacridone to pigmentary form. 4,298,398, Cl. 106-288.00Q.
Flagg, Rodger H. Balance assist for rotating recreational devices. 4,298,197, Cl. 272-115.000.

Flannery, James E.; Stempin, John L.; and Wexell, Dale R., to Corning Glass Works. Fluorophosphate opal glasses. 4,298,390, Cl. 501-32.000.
Flechtner, Charles: *See—*
  Herbelleau, Yves; and Flechtner, Charles, 4,298,046, Cl. 152-209.00R.
Floyd, Middleton B., Jr., to American Cyanamid Company. 15-Deoxy-16-hydroxy-16-(1'fluorovinyl) prostaglandins and derivatives. 4,298,754, Cl. 560-121.000.
Fluckiger, Peter; and Schefer, Kurt, to Rieter Machine Works, Ltd. Winding apparatus for endless filaments having an automatic bobbin tube changer. 4,298,171, Cl. 242-18.00A.
Fluegel, Dale A., to Phillips Petroleum Company. Method and apparatus for applying a regulated voltage. 4,298,939, Cl. 364-421.000.
FMC Corporation: *See—*
  Berkowitz, Sidney, 4,298,764, Cl. 568-618.000.
Fochesato, Antonio. Noninflammable olefin fibers and method of producing same. 4,298,509, Cl. 260-29.1SB.
Foerster, Siegfried: *See—*
  Krauth, Axel; Maier, Horst R.; Phlmann, Hans-Juergen; Foerster, Siegfried; and Kleeman, Manfred, 4,298,059, Cl. 165-166.000.
Fogg, James L., to Westinghouse Electric Corp. Leaf spring puller for nuclear fuel rods. 4,297,776, Cl. 29-252.000.
Fohl, Timothy: *See—*
  English, George J.; Levin, Robert E.; and Fohl, Timothy, 4,298,908, Cl. 362-14.000.
Fontaine Industries, Inc.: *See—*
  Tominaga, Hideo, 4,297,789, Cl. 33-298.000.
Ford, David M.: *See—*
  Hocutt, Hovan; and Ford, David M., 4,298,361, Cl. 55-290.000.
Ford Motor Company: *See—*
  Bellis, Andrew G., 4,297,980, Cl. 123-438.000.
  Mourray, Jack W., 4,298,193, Cl. 267-63.00R.
  Myers, Richard A., 4,297,910, Cl. 74-473.00R.
  Robins, Ronald F.; and Lindre, Jaan, 4,298,857, Cl. 340-52.00A.
  Strikis, Guntis V., 4,298,316, Cl. 417-310.000.
Ford, William D.: *See—*
  Tatterson, David F.; and Ford, William D., 4,298,459, Cl. 208-120.000.
Formica, Francis A.; and Izenberg, James B., to International Pigment Processing Corp. Process for salt grinding of pigments. 4,298,399, Cl. 106-309.000.
Fortuna, Jon A.: *See—*
  Swengel, Robert C., Jr.; Fortuna, Jon A.; and Defibaugh, George R., 4,298,243, Cl. 339-276.00F.
Foschi, Sergio: *See—*
  Borghi, Italo; Foschi, Sergio; and Galli, Paolo, 4,298,721, Cl. 526-348.000.
Fowler, Herbert H.: *See—*
  Israel, Allan D.; and Fowler, Herbert H., 4,298,768, Cl. 136-202.000.
Foy, Philip W.: *See—*
  Casey, Horace C., Jr.; Cho, Alfred Y.; and Foy, Philip W., 4,297,783, Cl. 29-578.000.
Frame, Robert R., to UOP Inc. Method of treating a sour petroleum distillate. 4,298,463, Cl. 208-189.000.
Francois, Daniel; and Glachet, Charles, to La Calhene. Master-slave mechanical manipulator with homothetic displacements. 4,298,300, Cl. 414-2.000.
Franklin Steel Company: *See—*
  Sweeney, Lawrence J., 4,298,075, Cl. 173-129.000.
  Sweeney, Lawrence J., 4,298,292, Cl. 404-10.000.
Franzen, Gustav, to Palitex Project Company GmbH. Yarn brake for a textile yarn processing machine. 4,297,834, Cl. 57-58.860.
Freche, Charles: *See—*
  Lotteau, Jacques; Bruker, Jacques; and Freche, Charles, 4,298,210, Cl. 280-259.000.
Freilich, Alfred: *See—*
  DeCristofaro, Nicholas J.; Freilich, Alfred; and Nathasingh, Davidson M., 4,298,409, Cl. 148-108.000.
Frick, John G., Jr.; and Harper, Robert J., Jr., to United States of America, Agriculture. Bis(dihydroxymethyloxoimidazolidinyl)alkanes. 4,298,747, Cl. 548-318.000.
Fried, Reinhard; Mayer, Andreas; and Perego, Ambrogio, to BBC Brown, Boveri & Company Limited. Starting valve and mounting therefor. 4,298,028, Cl. 137-868.000.
Friedman, Harvey S., to Polaroid Corporation. Processing roller cleaner. 4,298,267, Cl. 354-304.000.
Fringeli, Werner: *See—*
  Lange, Burkhart; Agarwal, Suresh C.; Fringeli, Werner; and Gunter, Franz, 4,298,490, Cl. 252-91.000.
Frischmann, Peter G.: *See—*
  Liebermann, Howard H.; Frischmann, Peter G.; and Rosenberry, George M., Jr., 4,298,659, Cl. 428-592.000.
Froberg, Magnus L.; and Schroeder, Charles F., to Owens-Corning Fiberglas Corporation. Glass manufacturing process having boron and fluorine pollution abating features. 4,298,369, Cl. 65-27.000.
Frost, Charles C.; and Weis, Siegfried K., to C. L. Frost & Son, Inc. Method for making chain bracket with strengthened chain supports. 4,297,959, Cl. 113-116.0HH.
Frost, Rodney I., to Corning Glass Works. Extrusion apparatus for preventing the distortion of peripheral cells in extruded honeycomb structures. 4,298,328, Cl. 425-376.00A.
Fuji Oil Company, Ltd.: *See—*
  Nagata, Toshiyuki; Terashima, Masahiko; and Mashima, Kazuto, 4,298,628, Cl. 426-656.000.
Fuji Photo Film Co., Ltd.: *See—*
  Kubotera, Kikuo; Mizuki, Eiichi; Satomura, Masato; Iwano, Haruhiko; and Fujiwara, Tadahiro, 4,298,673, Cl. 430-204.000.
  Shinozaki, Fumiaki; Washigawa, Yasuo; Ikeda, Tomoaki; Nakao, Sho; and Kondoh, Syunichi, 4,298,679, Cl. 430-281.000.
  Takagi, Yoshihiro; and Sakai, Masakado, 4,298,677, Cl. 430-244.000.
Fuji Photo Optical Co., Ltd.: *See—*
  Doi, Yoshikazu; Uchida, Takaaki; and Sakai, Yutaka, 4,298,252, Cl. 350-470.000.
Fuji Xerox Co., Ltd.: *See—*
  Arai, Yoshio; Kataoka, Hiroyuki; Suzuki, Isao; and Yokota, Shozo, 4,298,895, Cl. 358-284.000.
Fujii, Hiromu: *See—*
  Ohashi, Tetsro; Kitamura, Osamu; Fujii, Hiromu; Mineyuki, Seizo; and Takeuchi, Eiichi, 4,298,050, Cl. 164-468.000.
Fujiki, Yasuhiro: *See—*
  Suzuki, Kuzuhiko; Fujiki, Yasuhiro; Kitahori, Tojiro; and Takada, Akira, 4,298,652, Cl. 428-323.000.
Fujimori, Kuniaki; Suzuka, Teruo; Inoue, Yukio; and Aizawa, Shirou, to Nippon Mining Company, Limited. Process for processing sulfur-containing heavy oil. 4,298,460, Cl. 208-121.000.
Fujimori, Ryo: *See—*
  Ida, Hideaki; and Fujimori, Ryo, 4,298,449, Cl. 204-299.00R.
Fujisawa Pharmaceutical Co., Ltd.: *See—*
  Ueda, Ikuo; Takaya, Takao; Kobayashi, Masakazu; Masugi, Takashi; Takasugi, Hisashi; Kochi, Hiromu; and Kitaguchi, Tadashi, 4,298,529, Cl. 260-340.90R.
Fujishiro, Takeshi, to Nissan Motor Company, Limited. Device for detection of oxygen concentration in combustion gas. 4,298,573, Cl. 422-94.000.
Fujitsu Limited: *See—*
  Hirano, Yutaka; Fukuden, Nobutoshi; and Saito, Toshiaki, 4,298,846, Cl. 333-32.000.
  Hirano, Yutaka, 4,298,879, Cl. 357-22.000.
  Ito, Takashi, 4,297,782, Cl. 29-571.000.
  Nishihara, Mikio; Oda, Masahiro; and Tsuchimoto, Takamitsu, 4,298,770, Cl. 174-68.500.
  Nozaki, Takao; Ito, Takashi; Arakawa, Hideki; Ishikawa, Hajime; and Shinoda, Masaichi, 4,298,629, Cl. 427-39.000.
Fujiwara, Tadahiro: *See—*
  Kubotera, Kikuo; Mizuki, Eiichi; Satomura, Masato; Iwano, Haruhiko; and Fujiwara, Tadahiro, 4,298,673, Cl. 430-204.000.
Fukuda, Makoto, to Matsushita Electronics Corporation. Folded fluorescent lamp and socket. 4,298,822, Cl. 313-493.000.
Fukuda, Mitsuhisa: *See—*
  Kaneko, Yutaka; and Fukuda, Mitsuhisa, 4,298,244, Cl. 350-3.780.
Fukuden, Nobutoshi: *See—*
  Hirano, Yutaka; Fukuden, Nobutoshi; and Saito, Toshiaki, 4,298,846, Cl. 333-32.000.
Fukuto, Tetsuo R.: *See—*
  Fahmy, Mohamed A. H.; and Fukuto, Tetsuo R., 4,298,527, Cl. 260-340.50R.
  Fahmy, Mohamed A. H.; and Fukuto, Tetsuo R., 4,298,617, Cl. 424-298.000.
Funk, Larry J.; and Bluhm, Eugene A., to Nutting Truck and Caster Company. Tow truck. 4,297,950, Cl. 104-172.0BT.
Furst, Herbert: *See—*
  Thyret, Helmut; Balwe, Thomas; Hanzalik, Josef; Furst, Herbert; and Bauer, Johann, 4,298,576, Cl. 422-135.000.
Furuhashi, Toshio, to Hitachi, Ltd. Method for controlling an internal combustion engine. 4,298,941, Cl. 364-431.000.
Furuoya, Itsuo: *See—*
  Moriya, Koji; and Furuoya, Itsuo, 4,298,533, Cl. 260-346.750.
Futaba Denshi Kogyo K.K.: *See—*
  Kawasaki, Kishio; and Kishino, Takao, 4,298,823, Cl. 313-497.000.
Futamura, Shoji: *See—*
  Higuchi, Noboru; and Futamura, Shoji, 4,298,564, Cl. 264-177.00R.
Gabbay, Shlomo M., to Occidental Research Corporation. Use of aldehydes as embrittling agents for waste. 4,298,349, Cl. 44-1.00C.
Gaeddert, Melvin V., to Hesston Corporation. Crop pickup with outboard cam control. 4,297,833, Cl. 56-364.000.
Gafney, Harry D., to Research Foundation of the City University of New York. Producing long life disproportionation products from a photo redox agent useful as a reducing medium for water, and the like. 4,298,439, Cl. 204-157.10W.
Gakiya, Yoshiaki, to Clover Mfg. Co., Ltd. Hand device for making a bias tape. 4,298,148, Cl. 223-37.000.
Galcik, Anthony J.: *See—*
  Guenthner, Russell W.; Circello, Joseph C.; and Galcik, Anthony J., 4,298,952, Cl. 364-786.000.
Galer, Herbert W., to United States Steel Corporation. Child-proof lid and pail arrangement. 4,298,132, Cl. 220-288.000.
Galibin, Nikolai V.: *See—*
  Batalin, Oleg E.; Dykman, Arkady S.; Osadchenko, Alexandr I.; Balkhanova, Galina F.; Belgorodsky, Izrail M.; Nevstruev, Vladimir I.; Radionov, Valery A.; Tulchinsky, Eduard A.; Belyaev, Valentin M.; Smolin, Jury I.; Breiman, Mark I.; Orlyansky, Vitaly V.; Zhirnov, Nikolai Y.; Galibin, Nikolai V.; Troitsky, Adrian P.; and Kovalenko, Vladimir V., 4,298,503, Cl. 252-432.000.
Galleymore, Harry R.; James, Kenneth; Jones, Haydn F.; Bhardwaj, Chaman L.; Plant, James S., deceased; and by Plant, Aline P., administrator, to Talres Development (N.A.) N.V. Process for the production of a surfactant containing sucrose esters. 4,298,730, Cl. 536-119.000.

Galli, Ercole, to Mondial Piston - Dott. Galli Ercole & C. S.p.A. Device for improving the lubrication in a rotary coupling. 4,297,975, Cl. 123-193.00P.
Galli, Paolo: *See—*
  Borghi, Italo; Foschi, Sergio; and Galli, Paolo, 4,298,721, Cl. 526-348.000.
  Mayr, Adolfo; Galli, Paolo; Susa, Ermanno; Di Drusco, Giovanni; and Giachetti, Ettore, 4,298,718, Cl. 526-125.000.
Gallina, Denise. Multiple saucer sandwich cooking device. 4,297,941, Cl. 99-332.000.
Gallizia, Achille, to Societa' Pneumatici Pirelli. Equipment for the injection molding of motor vehicle tire treads. 4,298,321, Cl. 425-120.000.
Galvagni, John L., to AVX Corporation. Method of manufacturing a monolithic ceramic capacitor. 4,297,773, Cl. 29-25.420.
Gange, Robert A.: *See—*
  Credelle, Thomas L.; and Gange, Robert A., 4,298,819, Cl. 313-422.000.
GAO Gesellschaft fur Automation und Organisation mbH: *See—*
  Hoppe, Joachim; and Haghiri-Tehrani, Yahya, 4,298,158, Cl. 229-69.000.
Garbo, Paul W. Remote control having push-pull blade with captive rolling elements. 4,297,913, Cl. 74-501.00R.
Gardineer, Bayard: *See—*
  Mezrich, Reuben S.; Vilkomerson, David H. R.; and Gardineer, Bayard, 4,298,009, Cl. 128-660.000.
Gardiner, Arthur L.: *See—*
  Castillo, Tomas R.; and Gardiner, Arthur L., 4,297,939, Cl. 89-33.00L.
Garelick, Herbert J., to Garelick Mfg. Co. Locking mechanism for foldable walker. 4,298,016, Cl. 135-67.000.
Garelick Mfg. Co.: *See—*
  Garelick, Herbert J., 4,298,016, Cl. 135-67.000.
Gartner, William J.; and Henke, Harry R.; to Panlmatic Company. Water treatment system. 4,298,467, Cl. 210-96.100.
Gartner, William J. Water purification system. 4,298,475, Cl. 210-266.000.
Garza, Antonio M. Dishwasher. 4,298,015, Cl. 134-100.000.
Gates Rubber Company, The: *See—*
  Redmond, John D., Jr., 4,298,343, Cl. 474-255.000.
Gattu, Narahari, to Harnischfeger Corporation. Movable support for rotatable extend/retract screw in telescopic crane boom. 4,298,128, Cl. 212-267.000.
Gaul, John H., Jr.: *See—*
  Baney, Ronald H.; and Gaul, John H., Jr., 4,298,558, Cl. 264-65.000.
  Baney, Ronald H.; and Gaul, John H., Jr., 4,298,559, Cl. 264-65.000.
Gauthier, Henry J., to Scovill Inc. Apparatus for attaching slide fastener elements to fabric. 4,297,954, Cl. 112-104.000.
Gava, Paolo: *See—*
  Bozzo, Gian M.; Gava, Paolo; and Paruzzolo, Antonio, 4,298,295, Cl. 405-52.000.
Gellert, Dietrich W.: *See—*
  Adolfsson, Rune F. R.; and Gellert, Dietrich W., 4,298,551, Cl. 261-121.00R.
General Dynamics: *See—*
  Hujsak, Edward J., 4,298,178, Cl. 244-158.00R.
General Electric Company: *See—*
  Berger, Eugene L., 4,297,880, Cl. 73-155.000.
  Brooks, Robert B., 4,297,852, Cl. 62-153.000.
  Dehli, Diane M., 4,297,853, Cl. 62-325.000.
  Dinger, Edward H.; and Ritter, Allen M., 4,298,810, Cl. 307-252.00N.
  Eichelberger, Charles W.; Thomas, Charles E.; and Wojnarowski, Robert J., 4,298,789, Cl. 219-406.000.
  Espelage, Paul M.; and D'Atre, John D., 4,298,831, Cl. 318-112.000.
  Gerhold, Bruce W.; and Wilkes, Colin, 4,297,842, Cl. 60-39.060.
  Heitman, Christopher J.; and Schwehr, Gregory D., 4,298,801, Cl. 250-447.000.
  Hirsch, Harold H.; and Jackson, Melvin R., 4,298,816, Cl. 313-330.000.
  Hughes, William C., 4,298,986, Cl. 375-84.000.
  Johnson, Peter D., 4,298,813, Cl. 313-229.000.
  Kray, William D., 4,298,655, Cl. 428-412.000.
  Lee, Gim F., Jr., 4,298,514, Cl. 260-29.1SB.
  Liebermann, Howard H.; Frischmann, Peter G.; and Rosenberry, George M., Jr., 4,298,659, Cl. 428-592.000.
  McCarty, William J.; and Ruark, Bruce L., 4,297,854, Cl. 62-325.000.
  McCarty, William J.; and Ruark, Bruce L., 4,297,855, Cl. 62-325.000.
  Olashaw, William F., 4,298,771, Cl. 174-71.00B.
  Philp, Sanborn F., 4,298,853, Cl. 336-83.000.
  Rampel, Guy, 4,298,667, Cl. 429-248.000.
  Schroeter, Siegfried H.; and Olson, Daniel R., 4,298,632, Cl. 427-160.000.
  Sugalski, Raymond K.; Hooke, John W.; and Pate, Paul E., 4,298,662, Cl. 429-50.000.
  Toma, John W., 4,298,110, Cl. 192-48.400.
General Electric Company Limited, The: *See—*
  Ellis, Stafford M., 4,298,903, Cl. 361-386.000.
General Foods Corporation: *See—*
  Katz, Saul N.; and Proscia, George E., 4,298,736, Cl. 544-274.000.
  Mehring, Jeffrey S.; Sayen, Ronald J.; Schara, Robert E.; Stocker, Charles T.; and Rodriguez, Juan G., 4,298,624, Cl. 426-532.000.
General Motors Corporation: *See—*
  Clayton, Kenneth H.; Denniston, Charles D.; Guetersloh, Donald G.; and Hallmann, Melvin H., 4,298,342, Cl. 474-110.000.
  Duhaime, Michael L., 4,298,105, Cl. 192-3.230.
General Signal Corporation: *See—*
  Glidden, James L., 4,298,319, Cl. 418-132.000.
Genin, Richard: *See—*
  Colonna, Jean; Fitremann, Jean-Michel; Genin, Richard; and Sarda, Jean-Paul, 4,298,066, Cl. 166-300.000.
Geninl, Graziano, to Albatex AG. Shed forming device for looms. 4,298,031, Cl. 139-55.100.
Genjida, Fumihide; Kawakatsu, Kunio; and Ii, Motohiko, to Sanyo Chemical Industries, Ltd. Hydraulic fluid compositions comprising borate esters of oxyalkylated heterocyclic or alicyclic amines. 4,298,487, Cl. 252-75.000.
Genuit, Luther L., to Honeywell Information Systems Inc. Switching regulator circuit with phase shift subtraction. 4,298,924, Cl. 363-46.000.
Gerber Products Company: *See—*
  Harter, Elton H., 4,297,792, Cl. 34-12.000.
Gerhardt, Werner; Wehle, Volker; Syldatk, Andreas; Rogall, Gabriele; Reiffert, Jurgen; and Conrad, Jens, to Henkel Kommanditgesellschaft auf Aktien. Method and composition for inhibiting corrosion of nonferrous metals in contact with water. 4,298,568, Cl. 422-16.000.
Gerhold, Bruce W.; and Wilkes, Colin, to General Electric Company. NOx suppressant stationary gas turbine combustor. 4,297,842, Cl. 60-39.060.
Germain, Alfred; and Bonamour du Tartre, Georges, to Union Siderurgique du nord et de l'est de la France ("USINOR"). Machines for cooling metal sheets or like products. 4,298,188, Cl. 266-114.000.
Gerst, Robert C.: *See—*
  Counselor, Gary D.; Gerst, Robert C.; and Pennington, Reginald A., 4,298,049, Cl. 164-30.000.
Gervais, Michel: *See—*
  Kapuscinski, Marek; and Gervais, Michel, 4,298,630, Cl. 427-44.000.
Geschka, Hugo-Werner; and Beitecke, Bernd, to LuK Lamellen und Kupplungsbau GmbH. Automatic towel dispenser. 4,297,859, Cl. 68-13.00R.
Giachetti, Ettore: *See—*
  Mayr, Adolfo; Galli, Paolo; Susa, Ermanno; Di Drusco, Giovanni; and Giachetti, Ettore, 4,298,718, Cl. 526-125.000.
Giben Impianti S.p.A.: *See—*
  Benuzzi, Gino, 4,297,928, Cl. 83-57.000.
Gilcher, Heinz, to American Standard Inc. Vital cross field transformer circuit arrangement for railroad signaling systems. 4,298,179, Cl. 246-34.00R.
Gillet, Roger: *See—*
  Damiron, Rene; Gillet, Roger; Heuillard, Jean-Francois; and Ruelle, Gilbert, 4,298,812, Cl. 310-61.000.
Gimler, John R., to Hercules Incorporated. Solventless extrusion of double base propellant prepared by a slurry process. 4,298,552, Cl. 264-3.00B.
Ginter, Sally P.; Pawloski, Chester E.; and Stevens, Violete L., to Dow Chemical Company, The. Polyhydroxyl polyether compounds containing phosphorus and polymeric resins prepared therefrom. 4,298,709, Cl. 521-169.000.
Girard, Francois: *See—*
  Bernard, Claude R.; Daigne, Bernard; and Girard, Francois, 4,298,797, Cl. 250-372.000.
Girou, Andre: *See—*
  Malafosse, Jean; Girou, Andre; Olivier, Herve; and Dupont, Michel, 4,298,585, Cl. 423-279.000.
Giuffrida, Anthony J., to Ionics, Incorporated. Electrodialysis process for silica removal. 4,298,442, Cl. 204-180.00P.
Glachet, Charles: *See—*
  Francois, Daniel; and Glachet, Charles, 4,298,300, Cl. 414-2.000.
Glass, Cecil A.; and Burns, Dallas D., to United States of America, Navy. Cloud detonator in surface-launched fuel-air explosive minefield clearance round. 4,297,949, Cl. 102-229.000.
Glass, Geoffrey M. Hollow plastic barricade. 4,298,186, Cl. 256-64.000.
Glatthorn, Raymond H.: *See—*
  Schneider, Urban A.; Monley, Robert E.; Nelson, Robert L.; and Glatthorn, Raymond H., 4,298,783, Cl. 219-75.000.
Glaxo Group Limited: *See—*
  Stables, Harry C., 4,298,732, Cl. 544-20.000.
Glidden, James L., to General Signal Corporation. Hydraulic gear pump or motor with floating wear plates, balance assembly, and unitary load bearing and alignment means. 4,298,319, Cl. 418-132.000.
Glock, Wilfried. Antilock-freezing device. 4,297,863, Cl. 70-395.000.
Gloor, Ernst; Kaufmann, Meinolph; and Kmetz, Allan R., to BBC Brown, Boveri & Company, Ltd. Electro-optical display having an improved reflector and method of making. 4,298,249, Cl. 350-338.000.
Gluck, Lewis; and Tannenbaum, Robin M. Automatic gel changer for a spotlight. 4,298,920, Cl. 362-281.000.
Godsey, James H., to Hercules Incorporated. Crosslinked smokeless propellants. 4,298,411, Cl. 149-19.400.
Goetz, Norbert; Himmele, Walter; and Hupfer, Leopold, to BASF Aktiengesellschaft. Preparation of cis-2,6-dimethylmorpholine. 4,298,733, Cl. 544-106.000.
Goff, James R.: *See—*
  Spence, Adam M.; and Goff, James R., 4,298,231, Cl. 299-50.000.
Goh, Atsushi: *See—*
  Konno, Kazuhiko; Goh, Atsushi; and Sugaya, Kiyoshi, 4,298,740, Cl. 546-226.000.

Goldfarb, Adolph E.; and Dantzer, Elonne, to Goldfarb, Adolph E. Night light apparatus. 4,298,915, Cl. 362-124.000.

Goldman, Arnold, to Computome Corporation. Tomographic apparatus and method for obtaining three-dimensional information by radiation scanning. 4,298,800, Cl. 250-445.00T.

Golub, Allyn L., to Key Pharmaceuticals, Inc. Bandage containing attachment post. 4,297,995, Cl. 128-156.000.

Goodwin, Richard A.: *See*—
Upshaw, Clarence W.; and Goodwin, Richard A., 4,298,127, Cl. 211-126.000.

Gorbacheva, Nadezhda S.: *See*—
Bochkarev, Ellin P.; Prokopov, Igor V.; Eljutin, Alexandr V.; Belsky, Arkady A.; Baryshnikova, Svetlana M.; Nasyrov, Nail Z.; Novikov, Nikolai A.; Khairulin, Edige R.; Zvyagin, Mikhail S.; Abrjutin, Vladimir N.; Konstantinova, Ljubov I.; Ljubimova, Nina A.; and Gorbacheva, Nadezhda S., 4,298,380, Cl. 75-101.0BE.

Gorog, Sandor: *See*—
Jovanovics, Karola; and Gorog, Sandor, 4,298,525, Cl. 260-244.400.

Gottschalk, Robert E.; and Navarro, Felipe, to Panavision, Incorporated. Body harness for cinematographer. 4,298,149, Cl. 224-201.000.

Gottschalk, Robert E., to Panavision, Incorporated. Apparatus for preflashing motion picture film. 4,298,255, Cl. 352-85.000.

Gotz, Gerhard: *See*—
Bauer, Erwin; Davids, Ralf; Gotz, Gerhard; Jussen, Hilmar; Arndt, Heinrich; Kummel, Louis; Morhart, Rudolf; and Pollak-Banda, Erich, 4,297,917, Cl. 74-665.00G.

Gradassi, Michael J.: *See*—
Pellet, Regis J.; Gradassi, Michael J.; and Bertolacini, Ralph J., 4,298,461, Cl. 208-139.000.

Grahn, Sven-Ake; Roland, Magnus A.; and Eriksson, Carl L., to Saab-Scania Aktiebolag. Steering equipment arrangement for motor vehicles. 4,297,911, Cl. 280-777.000.

Grain Processing Corporation: *See*—
Armbruster, Frederick C., 4,298,400, Cl. 127-29.000.

Granholm, Carl; and Faudi, Rudi, to BSG-Schalttechnik GmbH & Co., K.G. Locking apparatus for preventing unauthorized access. 4,298,792, Cl. 235-375.000.

Graphic Technology, Inc.: *See*—
McCurdy, Frederic, 4,298,124, Cl. 206-455.000.

Gras, Gilbert: *See*—
Leveque, Jean-Luc; Rasseneur, Laurent; de Rigal, Jean P.; and Gras, Gilbert, 4,297,884, Cl. 73-579.000.

Grattan, James A.: *See*—
Farina, Peter R.; and Grattan, James A., 4,298,735, Cl. 544-257.000

Greene, Joseph L., to Richardson Chemical Company. Chromium-free or low-chromium metal surface passivation. 4,298,404, Cl. 148-6.14A.

Greenzweig, John E.: *See*—
Moulson, Thomas J.; and Greenzweig, John E., 4,298,711, Cl. 525-40.000.

Greer Hydraulics, Incorporated: *See*—
Zahid, Abduz, 4,298,029, Cl. 138-30.000.

Gregor, John A.; and Sellers, Gregory J., to Allied Chemical Corporation. Amorphous antipilferage marker. 4,298,862, Cl. 340-572.000.

Grib, James J.: *See*—
Lin, Wayne H. T.; Grib, James J.; and Mosier, Larry D., 4,298,592, Cl. 424-1.000.

Gribnau, Thomas: *See*—
Hildebrand, Dietrich; and Gribnau, Thomas, 4,298,395, Cl. 106-163.00R.

Grier, John D.: *See*—
Taylor, Lynn J.; and Grier, John D., 4,298,516, Cl. 260-31.80R.

Griffith, Gary L.; and Sherman, Charles J., to Bell Telephone Laboratories, Incorporated. Printed wiring board interconnection apparatus. 4,298,237, Cl. 339-17.00L.

Griffith-Hope Company: *See*—
Filipowicz, Edwin A., 4,298,126, Cl. 211-50.000.

Grillet, Jacques. Cable connector. 4,298,240, Cl. 339-109.000.

Gross, Jerome A.: *See*—
Hohenemser, Kurt H.; and Gross, Jerome A., 4,298,313, Cl. 416-98.000.

Grossoleil, Jacques: *See*—
Daniel, Jean-Claude; Grossoleil, Jacques; and Roullet, Robert, 4,298,637, Cl. 427-372.200.

Grovag Grossventiltechnik A.G.: *See*—
Squirrell, Anton F., 4,298,235, Cl. 308-26.000.

Groves, Malcolm D.: *See*—
Anthony, Andrew J.; and Groves, Malcolm D., 4,298,434, Cl. 376-364.000.

Groves, Michael R.; and Coulter, Wallace H., to Coulter Electronics, Inc. Particle shape determination. 4,298,836, Cl. 324-71.0CP.

Gruner, Garrett: *See*—
Tompson, Clement R.; and Gruner, Garrett, 4,298,943, Cl. 364-505.000.

Grunert, Wolfgang; Huber, Johann; and Rheindt, Kurt, to Knorr-Bremse GmbH. Valve seal for a pressure medium controlling valve. 4,298,184, Cl. 251-357.000.

Gryn, Felix J., to Emerson Electric Co. Field replaceable electrode assembly for magnetic flowmeter. 4,297,895, Cl. 73-861.120.

GTE Automatic Electric Labs Inc.: *See*—
Jusinskas, Julius, Jr., 4,298,774, Cl. 179-18.0BG.

GTE Products Corporation: *See*—
English, George J.; Levin, Robert E.; and Fohl, Timothy, 4,298,908, Cl. 362-14.000.
Powers, John A.; and Christini, James N., 4,298,485, Cl. 252-49.700.
Rowe, Don H., 4,298,835, Cl. 323-281.000.

Guellich, Fritz: *See*—
Sappok, Reinhard; Guellich, Fritz; Roth, Karl; and Wiesenberger, Alois, 4,298,526, Cl. 260-314.500.

Guenthner, Russell W.; Circello, Joseph C.; and Galcik, Anthony J., to Honeywell Information Systems Inc. One's complement adder. 4,298,952, Cl. 364-786.000.

Guetersloh, Donald G.: *See*—
Clayton, Kenneth H.; Denniston, Charles D.; Guetersloh, Donald G.; and Hallmann, Melvin H., 4,298,342, Cl. 474-110.000.

Gunter, Franz: *See*—
Lange, Burkhart; Agarwal, Suresh C.; Fringeli, Werner; and Gunter, Franz, 4,298,490, Cl. 252-91.000.

Gurney, Gerald W., to C. L. Frost & Son, Inc. Chain link and chain assembly including same. 4,297,839, Cl. 59-85.000.

Gurney, Gerald W.; and Lanham, William E., Jr., to C. L. Frost & Son, Inc. Chain link and chain assembly including same. 4,297,840, Cl. 59-85.000.

Gutehoffnungshutte Sterkrade AG: *See*—
Blotenberg, Wilfried, 4,298,310, Cl. 415-1.000.

Guthikonda, Ravindra N.: *See*—
Christensen, Burton G.; Guthikonda, Ravindra N.; and Ratcliffe, Ronald W., 4,298,741, Cl. 546-272.000.

Guthrie, David B.: *See*—
Cheng, William J.; and Guthrie, David B., 4,298,482, Cl. 252-25.000.

Gysegem, Albert P.: *See*—
Law, Gabriel H.; and Gysegem, Albert P., 4,298,543, Cl. 260-429.700.

H. Jack Flanders Co.: *See*—
Seffens, David E., 4,298,043, Cl. 144-136.00R.

Haberle, Fritz: *See*—
Raffelsiefer, Kurt; Kurth, Herman W.; and Haberle, Fritz, 4,298,223, Cl. 292-216.000.

Hadekel, Ruben. Gyroscopic vertical reference system. 4,297,905, Cl. 74-5.430.

Haemer, Laurence F.; and Kimak, Theodore, to Congoleum Corporation. Differential gloss products and methods of making the same. 4,298,646, Cl. 428-159.000.

Haffer, Gregor: *See*—
Neef, Gunter; Eder, Ulrich; Haffer, Gregor; and Sauer, Gerhard, 4,298,538, Cl. 260-397.400.

Hagemann, Hermann; Klauke, Erich; and Petruck, Gerd-Michael, to Bayer Aktiengesellschaft. Preparation of 4-nitrothioanisole. 4,298,761, Cl. 568-44.000.

Haggard, William J., to Chemed Corporation. Pumping process. 4,298,018, Cl. 137-3.000.

Haghiri-Tehrani, Yahya: *See*—
Hoppe, Joachim; and Haghiri-Tehrani, Yahya, 4,298,158, Cl. 229-69.000.

Hagiwara, Yoshihide, to Japan Natural Food Co. Ltd. Tear grass fermentation product, and process. 4,298,620, Cl. 426-44.000.

Hahn, Erwin: *See*—
Hoch, Helmut; Hahn, Erwin; and Hiller, Heinrich, 4,298,534, Cl. 260-358.000.

Hahn, Klaus; Hinselmann, Klaus; Halbritter, Klaus; Rebafka, Walter; and Weber, Heinz, to BASF Aktiengesellschaft. Process for the manufacture of flame retardant polystyrene foams. 4,298,702, Cl. 521-79.000.

Hainline, Truman D., to Tellus Machinery Corporation. Protective workplace and system. 4,297,940, Cl. 98-33.00R.

Hajdu, Johann; and Knauft, Guenter, to International Business Machines Corporation. LSI Circuitry conforming to level sensitive scan design (LSSD) rules and method of testing same. 4,298,980, Cl. 371-25.000.

Halbritter, Klaus: *See*—
Hahn, Klaus; Hinselmann, Klaus; Halbritter, Klaus; Rebafka, Walter; and Weber, Heinz, 4,298,702, Cl. 521-79.000.

Haldor Topsoe A/S: *See*—
Skov, Allan, 4,298,694, Cl. 518-704.000.

Halin, Yves R.; and LeLandais, Jacques R. A., to Societe Nationale d'etude et de Construction de Moteurs d'Aviation. Device for hydraulic control of thrust reversal for jet engine. 4,297,844, Cl. 60-226.00A.

Hall, Stanley R., to Bunker Ramo Corporation. Nth Root processing apparatus. 4,298,951, Cl. 364-752.000.

Halliburton Services: *See*—
Falcon, Wayne J., 4,297,891, Cl. 73-756.000.

Hallmann, Melvin H.: *See*—
Clayton, Kenneth H.; Denniston, Charles D.; Guetersloh, Donald G.; and Hallmann, Melvin H., 4,298,342, Cl. 474-110.000.

Hamano, Kuniyuki; and Ohta, Toshiyuki, to Nippon Electric Co., Ltd. Memory. 4,298,962, Cl. 365-182.000.

Hamano, Shin: *See*—
Hirai, Hiromu; and Hamano, Shin, 4,297,888, Cl. 73-664.000.

Hammel, Joseph J., to PPG Industries, Inc. Method of improving glass melting by ablation enhancement. 4,298,370, Cl. 65-27.000.

Hammell, Susan B., to Schering Corporation. Clotrimazole-betamethasone dipropionate combination. 4,298,604, Cl. 424-240.000.

Hamprecht, Gerhard; Stubenrauch, Gerd; Urbach, Hans; and Wuerzer, Bruno, to BASF Aktiengesellschaft. Benzothiadiazine compounds. 4,298,731, Cl. 544-11.000.

Hanko, Jimmy J.: *See*—
Roccaforte, Harry I.; and Hanko, Jimmy J., 4,298,123, Cl. 206-396.000.

Hanna Mining Company, The: *See*—
Zambrano, Adolfo R., 4,298,379, Cl. 75-82.000.

Hannebaum, Heinz: *See*—
Degner, Dieter; Siegel, Hardo; and Hannebaum, Heinz, 4,298,438, Cl. 204-78.000.

Hansel, Sydney; and Baker, Thomas N., to Filer and Stowell Company, The. Wood chipper. 4,298,044, Cl. 144-176.000.

Hansen, Edna C.: *See*—
Hansen, Ralph D.; and Hansen, Edna C., 4,298,224, Cl. 294-19.00R.

Hansen, Ralph D.; and Hansen, Edna C. Eaves cleaning implement. 4,298,224, Cl. 294-19.00R.

Hansen, Walter I.: *See*—
Kyte, Derek J.; Hansen, Walter I.; and Craig, Roderick I., 4,298,945, Cl. 364-523.000.

Hansford, William B. Sprayable hydromulch. 4,297,810, Cl. 47-9.000.

Hanson, David J.: *See*—
Buck, Norman R.; and Hanson, David J., 4,298,775, Cl. 179-81.00R.

Hanson, Raymond A. Form handling system. 4,298,296, Cl. 405-146.000.

Hanson, Wallace O. Solar energy collector. 4,297,988, Cl. 126-439.000.

Hansson, Gunnar C., to Atlas Copco Aktiebolag. Overspeed safety device. 4,298,317, Cl. 418-43.000.

Hanzalik, Josef: *See*—
Thyret, Helmut; Balwe, Thomas; Hanzalik, Josef; Furst, Herbert; and Bauer, Johann, 4,298,576, Cl. 422-135.000.

Harada, Yusuke: *See*—
Oi, Nobuhiro; Aoki, Bunya; Shinozaki, Teizo; Moro, Kanji; Matsunaga, Isao; Noto, Takao; Nebashi, Toshiyuki; Harada, Yusuke; Eodo, Hisao; Kimura, Takao; Okazaki, Hiroshi; Ogawa, Haruki; and Shindo, Minoru, 4,298,605, Cl. 424-246.000.

Hard, Robert A., to Occidental Research Corporation. Method for producing magnesium metal from molten salt. 4,298,437, Cl. 204-70.000.

Hardersen, Charles P.: *See*—
Bossler, Robert B., Jr.; and Hardersen, Charles P., 4,297,907, Cl. 74-417.000.

Hardman, Harley F.; and Beach, Ronald I., to Standard Oil Company. Preparation of alcohols from synthesis gas. 4,298,354, Cl. 44-56.000.

Hardwick, Cret E. Rotatably adjustable trouble lamp shield. 4,298,922, Cl. 362-376.000.

Hardy, Terence: *See*—
Litchfield, Leon G.; and Hardy, Terence, 4,298,234, Cl. 308-3.600.

Hargest, Thomas S., III; and Ryan, William C., Jr. Fluid flow connector unit and method. 4,298,001, Cl. 128-247.000.

Harle, Anton, to Howmedica International, Inc.-Zweigniederlassung, Kiel. Aid for osteosynthesis. 4,297,993, Cl. 128-92.00D.

Harney, Robert C., to Massachusetts Institute of Technology. Infrared radar system. 4,298,280, Cl. 356-5.000.

Harnischfeger Corporation: *See*—
Gatto, Narahari, 4,298,128, Cl. 212-267.000.

Harper, George C., Jr., to Pittsburgh-Des Moines Corporation. Strut for space frames. 4,297,825, Cl. 52-729.000.

Harper, Jon J.; and Pietsch, Stephen J., to Standard Oil Company (Indiana). Separation of cobalt and manganese from trimellitic acid process residue by precipitating as carbonates, redissolving as halides and removing cobalt by magnetic means. 4,298,580, Cl. 423-40.000.

Harper, Jon J.; and Pietsch, Stephen J., to Standard Oil Company (Indiana). Separation of cobalt and manganese from trimellitic acid process residue by flame extraction, ion exchanger and magnet. 4,298,759, Cl. 562-485.000.

Harper, Robert J., Jr.: *See*—
Frick, John G., Jr.; and Harper, Robert J., Jr., 4,298,747, Cl. 548-318.000.

Harrison, Thomas C.: *See*—
Browolee, Malcolm; and Harrison, Thomas C., 4,298,406, Cl. 148-12.00B.

Harter, Elton H., to Gerber Products Company. Modified jar dryer. 4,297,792, Cl. 34-12.000.

Hartmann, Rudolf, to Bell & Howell Company. Dual macro zoom optical system. 4,298,251, Cl. 350-428.000.

Hartsell, Glenn A.; and Bilek, F. Thomas, to Texas Instruments Incorporated. Electronically controlled programmable digital thermostat. 4,298,946, Cl. 364-557.000.

Hartung, Lee R.: *See*—
Norberg, Gayle R.; and Hartung, Lee R., 4,298,860, Cl. 340-825.040.

Hasegawa, Hiroshi, to Nippon Kogaku K.K. Electromagnetic release device in a camera. 4,298,263, Cl. 354-234.000.

Hashiguchi, Hiroshi: *See*—
Ronel, Samuel H.; D'Andrea, Mark J.; Dobelle, William H.; Klomp, Gregory F.; and Hashiguchi, Hiroshi, 4,298,002, Cl. 128-260.000.

Hata, Tsuneyuki: *See*—
Sato, Isao; Kato, Fumio; Uchiyama, Yoshihiro; Iizuka, Nobuyuki; and Hata, Tsuneyuki, 4,297,843, Cl. 60-39.320.

Haubner, Georg; Wesemeyer, Jurgen; and Schrumpf, Hans, to Robert Bosch GmbH. Apparatus for data transfer to microprocessors. 4,298,930, Cl. 364-200.000.

Hauni-Werke Korber & Co. KG.: *See*—
Wochnowski, Waldemar, 4,298,012, Cl. 131-296.000.

Hawkins, Laric V., to Unisearch Limited. High resolution downhole-crosshole seismic reflection profiling to resolve detailed coal seam structure. 4,298,967, Cl. 367-57.000.

Hawley, Elton G.: *See*—
White, Joe I.; and Hawley, Elton G., 4,298,166, Cl. 239-24.000.

Hayakawa, Kimiaki: *See*—
Yoshimura, Shigeru; Nomura, Akihiro; and Hayakawa, Kimiaki, 4,298,279, Cl. 355-133.000.

Hayakawa, Kiyoshi: *See*—
Kawase, Kaoru; and Hayakawa, Kiyoshi, 4,298,698, Cl. 521-27.000.

Hayase, Masahiro; Sugimoto, Hiroyuki; and Takemoto, Mitsuteru, to Shinagawa Refractories Co., Ltd. Hot repair gun refractory mix for a lining refractory. 4,298,391, Cl. 501-89.000.

Hayashi, Kenji, to Aisan Industry Co., Ltd. Carburetor. 4,298,550, Cl. 261-69.00R.

Hayashi, Masaharu, to Aisin Seiki Kabushiki Kaisha. Viscous fluid coupling device. 4,298,111, Cl. 192-58.00B.

Haydt, Leo A., Jr., to Precision Tool & Machine, Inc. Apparatus for molding laminated foam-body panels. 4,298,323, Cl. 425-162.000.

Hayes, Derek. Multi-pin electrical plugs. 4,298,238, Cl. 339-63.00M.

Hayes, Robert A.: *See*—
Hergenrother, William L.; Schwarz, Richard A.; Ambrose, Richard J.; and Hayes, Robert A., 4,298,707, Cl. 521-95.000.

Headrick, Richard T., to Picbel Industries, Inc. Lighting device for creating public attraction. 4,298,911, Cl. 362-35.000.

Heat and Control, Inc.: *See*—
Benson, Clark K.; Caridis, Andrew A.; and Nilsen, Arthur A., 4,297,942, Cl. 99-386.000.

Heat Mirror Associates: *See*—
Chahroudi, Day, 4,298,444, Cl. 204-192.00R.

Heavner, George, to Ortho Pharmaceutical Corporation. Methods and compositions for preparation of H-ARG-X-Z-Y-TYR-R. 4,298,523, Cl. 260-112.50R.

Heckman, Wolfgang: *See*—
Epper, Wolfgang; and Heckman, Wolfgang, 4,298,159, Cl. 233-7.000.

Heideman, Robert J.: *See*—
Dressell, Richard G., Jr.; and Heideman, Robert J., 4,298,101, Cl. 188-285.000.

Hein, Norman W., Jr.; and Oertle, Donald H., to Conoco Inc. Acoustic emission for detection and monitoring of crack initiation and propagation in materials. 4,297,885, Cl. 73-587.000.

Heitman, Christopher J.; and Schwehr, Gregory D., to General Electric Company. L-U Arm handle assembly. 4,298,801, Cl. 250-447.000.

Heitmann, Jurgen, to Robert Bosch GmbH. Flicker-free reproduction of television pictures from recordings of only alternate picture lines. 4,298,896, Cl. 360-11.000.

Heldor Associates, Inc.: *See*—
Arp, George F., 4,297,819, Cl. 52-293.000.

Hellstrom, Jerker, to Aktiebolaget IRO; and Aros Electronics AB. Method and apparatus for controlling a thread storage and feeder device. 4,298,172, Cl. 242-47.010.

Hendry, Eric D., to English Electric Valve Company. Electron tube with particle trap integral with envelope wall. 4,298,821, Cl. 313-477.00R.

Henery, Vern A., to PPG Industries, Inc. Apparatus for vaporizing solid coating reactants. 4,297,971, Cl. 118-719.000.

Henke, Harry R.: *See*—
Gartner, William J.; and Henke, Harry R., 4,298,467, Cl. 210-96.100.

Henkel Kommanditgesellschaft auf Aktien: *See*—
Gerhardt, Werner; Wehle, Volker; Syldatk, Andreas; Rogall, Gabriele; Reiffert, Jurgen; and Conrad, Jens, 4,298,568, Cl. 422-16.000.

Hennenfent, Douglas J.; Johnson, Robert A.; and Holmstrand, Allan L., to Magnetic Peripherals Inc. Method of aligning a precision grinding wheel assembly. 4,297,781, Cl. 29-467.000.

Hensolt, Theodor, to Kraftwerk Union Aktiengesellschaft. Device for holding gas-cooled fuel assemblies of nuclear reactors. 4,298,432, Cl. 376-365.000.

Herbelleau, Yves; and Flechtner, Charles, to Compagnie Generale des Etablissements Michelin. Winter tire. 4,298,046, Cl. 152-209.00R.

Herchenbach, Horst; and Lechner, Bartl, to Klockner-Humboldt-Deutz AG. Method and apparatus for producing a hydraulic binder. 4,298,340, Cl. 432-58.000.

Herchenbach, Horst: *See*—
Brachthauser, Kunibert; and Herchenbach, Horst, 4,298,393, Cl. 106-100.000.

Hercules Incorporated: *See*—
Gimler, John R., 4,298,552, Cl. 264-3.00B.
Godsey, James H., 4,298,411, Cl. 149-19.400.
Majewicz, Thomas G.; and Ropp, Walter S., 4,298,728, Cl. 536-96.000.

Herd, Richard S.: *See*—
Davis, Robert H.; and Herd, Richard S., 4,298,483, Cl. 252-32.7HC.

Hergenrother, William L.; Schwarz, Richard A.; Ambrose, Richard J.; and Hayes, Robert A., to Firestone Tire & Rubber Company, The. Amine terminated polymers and the formation of block copolymers. 4,298,707, Cl. 521-95.000.

Hergert, Richard E.; and Bergstrom, Jan I., to Beloit Corporation. Means for effecting cross direction fiber orientation in a papermaking machine headbox. 4,298,429, Cl. 162-343.000.

Hermann Berstorff Maschinenbau GmbH: *See*—
Anders, Dietmar; and Dienst, Manfred, 4,298,322, Cl. 425-147.000.

Herold, Wolf-Dietrich, to ESPE Fabrik pharmazeutischer Praparate GmbH. Apparatus for irradiating substances curable by radiation. 4,298,806, Cl. 250-504.00H.

Herrmann, Lother: *See*—
Muller, Helmuth; and Herrmann, Lother, 4,298,791, Cl. 235-132.00R.

Herzl, Peter J., to Fischer & Porter Co. Stabilized vortex-shedding flowmeter. 4,297,898, Cl. 73-861.220.

Heskett, Don E. Fluid treating apparatus. 4,298,468, Cl. 210-136.000.

Hesse, Wolfgang: *See—*
Teschner, Eckart; Sattelmeyer, Richard; and Hesse, Wolfgang, 4,298,356, Cl. 51-297.000.
Hesston Corporation: *See—*
Gaeddert, Melvin V., 4,297,833, Cl. 56-364.000.
Hetberington, Robert D., to Poly-Glas Systems. Automatic fluid component shut off system. 4,298,017, Cl. 137-1.000.
Heuillard, Jean-Francois: *See—*
Damiron, Rene; Gillet, Roger; Heuillard, Jean-Francois; and Ruelle, Gilbert, 4,298,812, Cl. 310-61.000.
Hidaka, Ryoji: *See—*
Ohmura, Yasuhiro; Murakami, Yukinobu; and Hidaka, Ryoji, 4,298,518, Cl. 260-32.6NA.
Hideshima, Keiji: *See—*
Takaki, Masaoki; Sawano, Hirokazu; Yamanaka, Kunio; Asada, Kazuyoshi; Hideshima, Keiji; and Koyanagi, Haruo, 4,298,958, Cl. 364-900.000.
Higashi, Hidekazu: *See—*
Nagai, Shunichi; and Higashi, Hidekazu, 4,298,114, Cl. 192-129.00A.
Higashide, Eiji; Tanida, Seiichi; Muroi, Masayuki; and Asai, Mitsuko, to Takeda Chemical Industries, Ltd. Antibiotic C-14482 A₁ and method for producing same. 4,298,600, Cl. 424-120.000.
Higdon, Charles O. Jaw support for a power tongs. 4,297,922, Cl. 81-57.180.
Hignett, Henry J., to United Kingdom of Great Britain and Northern Ireland, Secretary of State for Transport in Her Britannic Majesty's Government of the. Rock cutting tools. 4,298,080, Cl. 175-373.000.
Higuchi, Noboru; and Futamura, Shoji, to NGK Insulators, Ltd.; and Institute of Technology Precision Electrical Discharge Works. Die for extruding a honeycomb structural body and a method of extruding the same. 4,298,564, Cl. 264-177.00R.
Higuchi, Toshiharu: *See—*
Takanashi, Yukio; and Higuchi, Toshiharu, 4,298,814, Cl. 313-302.000.
Hildebrand, Dietrich; and Gribnau, Thomas, to Bayer Aktiengesellschaft. Activated polymeric carriers. 4,298,395, Cl. 106-163.00R.
Hill, Walter J., to British Steel Corporation. Defect detection. 4,298,808, Cl. 250-563.000.
Hiller, Heinrich: *See—*
Hoch, Helmut; Hahn, Erwin; and Hiller, Heinrich, 4,298,534, Cl. 260-358.000.
Himmele, Walter: *See—*
Goetz, Norbert; Himmele, Walter; and Hupfer, Leopold, 4,298,733, Cl. 544-106.000.
Hingarh, Hemraj K., to Fairchild Camera & Instrument Corp. Method of fabricating self-aligned lateral bipolar transistor utilizing special masking techniques. 4,298,402, Cl. 148-1.500.
Hinselmann, Klaus: *See—*
Hahn, Klaus; Hinselmann, Klaus; Halbritter, Klaus; Rebafka, Walter; and Weber, Heinz, 4,298,702, Cl. 521-79.000.
Hintsch, Otto: *See—*
Schmitz, Gerd; and Hintsch, Otto, 4,298,107, Cl. 192-12.00D.
Hirahata, Shigeru: *See—*
Tachiuchi, Tsuguji; Hirahata, Shigeru; and Takezawa, Teruhiro, 4,298,931, Cl. 364-200.000.
Hirai, Hiromu; and Hamano, Shin, to Hitachi, Ltd. Stability control system for vibration test device. 4,297,888, Cl. 73-664.000.
Hirano, Yutaka; Fukuden, Nobutoshi; and Saito, Toshiaki, to Fujitsu Limited. Semiconductor device. 4,298,846, Cl. 333-32.000.
Hirano, Yutaka, to Fujitsu Limited. Field effect transistor. 4,298,879, Cl. 357-22.000.
Hiraoka & Co., Ltd.: *See—*
Obayashi, Tsutomu; and Hiraoka, Hideyuki, 4,298,645, Cl. 428-110.000.
Hiraoka, Hideyuki: *See—*
Obayashi, Tsutomu; and Hiraoka, Hideyuki, 4,298,645, Cl. 428-110.000.
Hirata, Yukio: *See—*
Takeuchi, Tsugio; Tsuge, Shin; Hirata, Yukio; and Mochizuki, Koichi, 4,298,795, Cl. 250-282.000.
Hirsch, Harold H.; and Jackson, Melvin R., to General Electric Company. Molybdenum substrate for high power density tungsten focal track X-ray targets. 4,298,816, Cl. 313-330.000.
Hitachi Denshi Kabushiki Kaisha: *See—*
Kudo, Mitsuhiro; Otomo, Shigekazu; Ogihara, Hirotomo; and Aoki, Yoshio, 4,298,381, Cl. 75-124.000.
Hitachi, Ltd.: *See—*
Daikoku, Takahiro; and Oguro, Tomokatsu, 4,298,825, Cl. 315-39.510.
Furuhashi, Toshio, 4,298,941, Cl. 364-431.000.
Hirai, Hiromu; and Hamano, Shin, 4,297,888, Cl. 73-664.000.
Hotta, Atsuo; and Kato, Yukio, 4,298,961, Cl. 365-179.000.
Nishizuka, Hiroshi; Komoriya, Susumu; Morita, Koyo; and Osakaya, Takayoshi, 4,298,273, Cl. 355-61.000.
Onda, Kenichi; and Amano, Hisao, 4,298,809, Cl. 307-252.00C.
Sakurada, Shuroku; Nakashima, Yoichi; Kojima, Isao; Yagi, Hideyuki; Kariya, Tadaaki; and Sugiyama, Masayoshi, 4,298,881, Cl. 357-38.000.
Sasayama, Takao; Nishimura, Yutaka; Sakamoto, Shinichi; and Miki, Masayuki, 4,297,881, Cl. 73-204.000.
Sato, Isao; Kato, Fumio; Uchiyama, Yoshihiro; Iizuka, Nobuyuki; and Hata, Tsuneyuki, 4,297,843, Cl. 60-39.320.
Suzuki, Keizo; Okudaira, Sadayuki; Nishimatsu, Shigeru; and Kanomata, Ichiro, 4,298,419, Cl. 156-345.000.
Tachiuchi, Tsuguji; Hirahata, Shigeru; and Takezawa, Teruhiro, 4,298,931, Cl. 364-200.000.
Tadokoro, Tomio; and Horie, Tatsuro, 4,298,940, Cl. 364-426.000.
Takaki, Masaoki; Sawano, Hirokazu; Yamanaka, Kunio; Asada, Kazuyoshi; Hideshima, Keiji; and Koyanagi, Haruo, 4,298,958, Cl. 364-900.000.
Tsunoda, Yoshito; Tatsuno, Kimio; Miyauchi, Toshimitsu; Aiki, Kunio; and Ito, Ryoichi, 4,298,974, Cl. 369-45.000.
Yamamoto, Manabu; Murayama, Seiichi; Ito, Masaru; and Oishi, Kounosuke, 4,298,284, Cl. 356-368.000.
Hobbs, James W.: *See—*
Campbell, Grover L.; and Hobbs, James W., 4,298,363, Cl. 62-21.000.
Hobourn-Eaton Limited: *See—*
Bristow, Ian T.; and Petts, Nigel J., 4,298,315, Cl. 417-300.000.
Hoch, Helmut; Hahn, Erwin; and Hiller, Heinrich, to BASF Aktiengesellschaft. Preparation of brilliant, transparent pigmentary bromoisoviolanthrone of high tinctorial strength. 4,298,534, Cl. 260-358.000.
Hocutt, Hovan; and Ford, David M., to Pneumafil Corporation. Rotary drum filter stripper nozzle mounting. 4,298,361, Cl. 55-290.000.
Hodemaekers, Andreas M. L., to U.S. Philips Corporation. Liquid crystal display device having capacitance compensation. 4,298,866, Cl. 340-713.000.
Hodge, John D.: *See—*
Ruehle, William H.; and Hodge, John D., 4,298,968, Cl. 367-59.000.
Hoechst Aktiengesellschaft: *See—*
Moraw, Roland; and Walter, Helmut, 4,298,217, Cl. 283-7.000.
Teschner, Eckart; Sattelmeyer, Richard; and Hesse, Wolfgang, 4,298,356, Cl. 51-297.000.
Hoeffken, Russell W., to Singer Company, The. Heat exchanger with crimped flange seam. 4,298,061, Cl. 165-170.000.
Hoesch Werke Aktiengesellschaft: *See—*
Krenzer, Paul; Peters, Franz-Josef; Schlusnus, Karl-Heinz; and Wahl, Hans J., 4,298,785, Cl. 219-124.340.
Hoff, Stephen J., to Hoffco, Inc. Lawn mower blade rotation warning device. 4,297,829, Cl. 56-11.300.
Hoffco, Inc.: *See—*
Hoff, Stephen J., 4,297,829, Cl. 56-11.300.
Hoffman, Jerzy, to Dynatech - UZ, Inc. Multiposition microwave switch with independent termination. 4,298,847, Cl. 333-105.000.
Hoffmann-La Roche Inc.: *See—*
Vogel, Pierre; and Carrupt, Pierre-Alain, 4,298,535, Cl. 260-365.000.
Hohenemser, Kurt H.; and Gross, Jerome A. Horizontal axis wind generator having adaptive cyclic pitch control. 4,298,313, Cl. 416-98.000.
Hohne, Per, to Alfa-Laval Separation A/S. Decanter centrifuge. 4,298,162, Cl. 233-7.000.
Hok, Bertil, to Siemens Aktiengesellschaft. Pressure transducer. 4,297,890, Cl. 73-753.000.
Hollenbach, Gerald E.: *See—*
Cochran, Jerry R.; Insinger, Thomas H.; Hollenbach, Gerald E.; Piskorz, Ronald F.; and Smith, Addison M., 4,298,765, Cl. 568-754.000.
Hollenbeck, Arthur; and Petro, James, to Westinghouse Electric Corp. Method and apparatus for supplying filament coils to a mount machine. 4,298,136, Cl. 221-1.000.
Hollingsworth GmbH: *See—*
Loffler, Walter, 4,297,768, Cl. 19-113.000.
Holmes, James H. T.V. Energized by exercise cycle. 4,298,893, Cl. 358-190.000.
Holmstrand, Allan L.: *See—*
Hennenfent, Douglas J.; Johnson, Robert A.; and Holmstrand, Allan L., 4,297,781, Cl. 29-467.000.
Holstein and Kappert GmbH: *See—*
Knabe, Uwe; Sindermann, Siegmar; and Jordan, Heinrich, 4,298,039, Cl. 141-90.000.
Holt, Raymond B., Jr. Flash attachment with extendable head. 4,298,907, Cl. 362-4.000.
Holzer, Helmut; and von Arndt, Ernst M., to Carl Freudenberg, Firma. Two part shaft sealing ring. 4,298,203, Cl. 277-152.000.
Homola, Jaroslav; Remajzl, Karel; and Prokes, Milan, to CKD Praha, obrovy podnik. Multilayer semiconductor element. 4,298,882, Cl. 357-38.000.
Honda, Akira; Anzai, Takanori; Kitamura, Minoru; Ishikawa, Masaru; and Mizuoka, Seishi, to Nippon Kokan Kabushiki Kaisha. Discharging mechanism for molten metal and slag remaining in tundish for continuous casting machine. 4,298,147, Cl. 222-601.000.
Honda Giken Kogyo Kabushiki Kaisha: *See—*
Nishikawa, Masao; and Yamamoto, Hitoshi, 4,298,102, Cl. 188-319.000.
Honeywell Inc.: *See—*
Clark, Rodney L.; Kidder, Kenneth B.; and Peterson, Gary A., 4,298,334, Cl. 431-24.000.
Mills, Frank S., 4,298,855, Cl. 338-35.000.
Nelson, Lorne W., 4,298,056, Cl. 165-12.000.
Honeywell Information Systems Inc.: *See—*
Genuit, Luther L., 4,298,924, Cl. 363-46.000.
Guenthner, Russell W.; Circello, Joseph C.; and Galcik, Anthony J., 4,298,952, Cl. 364-786.000.
Lange, Ronald E.; and Koegel, Robert J., 4,298,935, Cl. 364-200.000.
Rathbun, Donald J.; and O'Keefe, David B., 4,298,956, Cl. 364-900.000.

Hood, John L. L., to British Cellophane Limited. Method and apparatus for the corona discharge treatment of webs, and webs treated therewith. 4,298,440, Cl. 204-165.000.
Hooke, John W.: *See—*
Sugalski, Raymond K.; Hooke, John W.; and Pate, Paul E., 4,298,662, Cl. 429-50.000.
Hoppe, Joachim; and Haghiri-Tehrani, Yahya, to GAO Gesellschaft fur Automation und Organisation mbH. Packaging element for packaging sheet material. 4,298,158, Cl. 229-69.000.
Hopper, Chester S.; and Case, Edward M., to Marlo Company, Inc., The. Resilient gasket material. 4,298,207, Cl. 277-230.000.
Horie, Tatsuro: *See—*
Tadokoro, Tomio; and Horie, Tatsuro, 4,298,940, Cl. 364-426.000.
Horikawa, Yuji: *See—*
Nei, Hiromichi; Ohtani, Ryoichi; Ohshima, Iwao; and Horikawa, Yuji, 4,297,873, Cl. 73-61.0LM.
Horney, Lee F., II: *See—*
Abbott, Robert P.; Chow, Ming-Chwan; Cirillo, Anthony J.; Drechsler, Rodolph C.; and Horney, Lee F., II, 4,298,977, Cl. 370-62.000.
Horodysky, Andrew G.; and Kaminski, Joan M., to Mobil Oil Corporation. Nitrogen-containing products of phosphosulfurized esters and lubricants containing same. 4,298,484, Cl. 252-46.700.
Horodysky, Andrew G.; and Kaminski, Joan M., to Mobil Oil Corporation. Friction reducing additives and compositions thereof. 4,298,486, Cl. 252-49.600.
Horton, Edward E.; and Walker, Raymond W., to Deep Oil Technology, Inc. Tension leg structure for tension leg platform. 4,297,965, Cl. 114-265.000.
Horvath, William, to Plastic Research Products, Inc. Dispenser for stick solids. 4,298,036, Cl. 141-1.000.
Hosokawa, Motoyuki: *See—*
Saito, Masao; Hosokawa, Motoyuki; Kawakami, Takamasa; and Murayama, Yuko, 4,298,545, Cl. 260-465.00H.
Hosono, Nagao: *See—*
Tajima, Hatsuo; Hosono, Nagao; and Kanbe, Junichiro, 4,297,970, Cl. 118-652.000.
Hossom, Miles G., to American Home Products Corporation. Method for measuring and dispensing fractionary volumes of liquid samples. 4,298,035, Cl. 141-1.000.
Hotta, Atsuo; and Kato, Yukio, to Hitachi, Ltd. Bipolar memory circuit. 4,298,961, Cl. 365-179.000.
Houghtaling, Samuel V.: *See—*
Davister, Armand L.; and Houghtaling, Samuel V., 4,298,583, Cl. 423-167.000.
HowAll Products, Inc.: *See—*
Allisbaugh, John H., 4,297,990, Cl. 126-445.000.
Howard, Alan N., to Technutra, S.A. Method and formulations for the treatment of obesity. 4,298,601, Cl. 424-128.000.
Howden, Ashley G.: *See—*
Jones, Lawrence T.; Sims, Anson; Howden, Ashley G.; Knighton, Mark S.; and Kingsbury, LC James, 4,298,788, Cl. 219-386.000.
Howe, Robert K.; and Lee, Len F., to Monsanto Company. 2-Substituted-5-phenyl-4-thiazolecarboxylic acids and their derivatives as safening agents. 4,298,375, Cl. 71-90.000.
Howells, Anthony P.; Diederich, Ronald E.; and Angehrn, Jorg A. Well logging correlation method and apparatus. 4,297,879, Cl. 73-152.000.
Howmedica International, Inc.-Zweigniederlassung, Kiel: *See—*
Harle, Anton, 4,297,993, Cl. 128-92.00D.
Huang, I-Der: *See—*
Oswald, Alexis A.; Jermansen, Torris G.; Westner, Andrew A.; and Huang, I-Der, 4,298,541, Cl. 260-429.00R.
Huang, Thomas L.; and Ling-Huang, Ling. Electronic game apparatus for a single player or opposing players. 4,298,198, Cl. 273-1.0GC.
Huang, Wann-Sheng, to Texaco Inc. Viscosity reduction process. 4,298,455, Cl. 208-48.0AA.
Huber, Johann: *See—*
Grunert, Wolfgang; Huber, Johann; and Rheindt, Kurt, 4,298,184, Cl. 251-357.000.
Hudrlik, Terrence R.: *See—*
Wright, Thomas C.; Hudrlik, Terrence R.; Mills, Perry A.; Rust, Robert C.; and Wallner, Thomas O., 4,298,007, Cl. 128-419.0PG.
Huffman, Fred N., to Thermo Electron Corporation. Method and apparatus for producing negative ions. 4,298,798, Cl. 250-423.00R.
Huggles & Meurer: *See—*
Vossen, Franz, 4,298,135, Cl. 220-371.000.
Hughes Aircraft Company: *See—*
Colles, Joseph H.; and Cooper, James E., Jr., 4,298,888, Cl. 358-140.000.
Rodgers, William E., 4,298,872, Cl. 343-100.0LE.
Hughes, William C., to General Electric Company. Receiver for phase-shift modulated carrier signals. 4,298,986, Cl. 375-84.000.
Hujii, Kunizo: *See—*
Terada, Sachio; Suhara, Akito; Shimada, Toshiro; Nakamura, Takashi; Hujii, Kunizo; and Nakahira, Nobuichi, 4,298,424, Cl. 156-668.000.
Hujsak, Edward J., to General Dynamics. Roving geosynchronous orbit satellite maintenance system. 4,298,178, Cl. 244-158.00R.
Hung, William M.: *See—*
Schmidt, Paul J.; and Hung, William M., 4,298,215, Cl. 282-27.500.
Hunsucker, Jerry H., to International Minerals & Chemical Corp. Coating composition of a polyamide and 2-nitro-2-hydroxymethyl-1,3-propanediol. 4,298,638, Cl. 427-385.500.
Hunter Douglas International, N.V.: *See—*
Rijnders, Willem, 4,297,822, Cl. 52-484.000.
Hunter, John J. Pipe sizing and grooving apparatus. 4,297,868, Cl. 72-402.000.
Hunter, Walter D., to Texaco Development Corporation. Secondary recovery process utilizing thickened water. 4,298,479, Cl. 252-8.55D.
Hunting Oilfield Services (U.K.) Limited: *See—*
McGugan, John D., 4,298,221, Cl. 285-328.000.
Hupf, Homer B.: *See—*
O'Brien, Harold A., Jr.; Hupf, Homer B.; and Wanek, Philip M., 4,298,591, Cl. 424-1.000.
Hupfer, Leopold: *See—*
Goetz, Norbert; Himmele, Walter; and Hupfer, Leopold, 4,298,733, Cl. 544-106.000.
Hurley, Patrick J.: *See—*
Barnes, Johnny G.; Hurley, Patrick J.; and Miller, Gary W., 4,298,290, Cl. 400-3.000.
Huron Chemicals Limited: *See—*
Casson, Harold V.; Crabtree, Grant G.; Kindl, Bruno; and Noonan, Edward B., 4,298,416, Cl. 156-87.000.
Hutchison, Wayne R., to Deere & Company. Brake-clutch interlock. 4,298,108, Cl. 192-13.00R.
Hwa, Stephen C. P., to Xerox Corporation. Development system. 4,297,972, Cl. 118-658.000.
Ida, Hideaki; and Fujimori, Ryo, to Olympus Optical Co., Ltd. Sample tray feeding apparatus. 4,298,449, Cl. 204-299.00R.
Ifrach, Abraham. Anti-theft motor fuel tank. 4,298,130, Cl. 220-20.000.
Iguera, Pierantonio: *See—*
Bruni, Ludovico; and Iguera, Pierantonio, 4,297,976, Cl. 123-193.0CP.
Ii, Motohiko: *See—*
Genjida, Fumihide; Kawakatsu, Kunio; and Ii, Motohiko, 4,298,487, Cl. 252-75.000.
Iida, Motoyori. Adapter for a container. 4,298,145, Cl. 222-478.000.
Iida, Takao; Shirahata, Kunikatsu; Ishii, Shinzo; Okachi, Ryo; and Nara, Takashi, to Kyowa Hakko Kogyo Co., Ltd. Antibiotics XK-62-3 and XK-62-4 and process for production thereof. 4,298,690, Cl. 435-80.000.
Iizuka, Nobuyuki: *See—*
Sato, Isao; Kato, Fumio; Uchiyama, Yoshihiro; Iizuka, Nobuyuki; and Hata, Tsuneyuki, 4,297,843, Cl. 60-39.320.
Ikeda, Kyoichi; and Ando, Motoyoshi, to Yokogawa Electric Works, Ltd. Vibration type transducer. 4,297,872, Cl. 73-32.00A.
Ikeda, Tomoaki: *See—*
Shinozaki, Fumiaki; Washigawa, Yasuo; Ikeda, Tomoaki; Nakao, Sho; and Kondoh, Syunichi, 4,298,679, Cl. 430-281.000.
Ikeno, Teruo; Kado, Satoshi; Ayusawa, Saburo; Kawasaki, Hironobu; and Watanabe, Takashi, to Nippon Steel Corporation. Surface treated steel materials. 4,298,661, Cl. 428-623.000.
Ilkcagla, Edward A. Dancing doll. 4,297,806, Cl. 46-1.00C.
Imai, Tamotsu, to UOP Inc. Recovery of catalysts. 4,298,499, Cl. 252-414.000.
Imamura, Akio; and Oya, Akiyoshi, to Nippon Gakki Seizo Kabushiki Kaisha. Display device for automatic rhythm performance apparatus. 4,297,934, Cl. 84-1.030.
Immuno Aktiengesellschaft fur chemisch-medizinische Produkte: *See—*
Schwarz, Otto; Linnau, Yendra; Loblich, Franz; and Seelich, Thomas, 4,298,598, Cl. 424-101.000.
Seidel, Dietrich; Wieland, Heinrich; and Molinari, Ewald, 4,298,441, Cl. 204-180.00G.
Imperial Chemical Industries Limited: *See—*
Cooper, John, 4,298,510, Cl. 260-29.20E.
Jones, Eirwyn; and Mitchell, Michael I., 4,297,947, Cl. 361-248.000.
Pinto, Alwyn, 4,298,588, Cl. 423-359.000.
Punja, Nazim; and Rathmell, William G., 4,298,616, Cl. 424-285.000.
Robinson, Graham E., 4,298,544, Cl. 260-453.0RW.
Inada, Masami; Kitamura, Kazuhiko; Ito, Shoji; Nonoyama, Takao; and Tsuji, Riichi, to Aisin Seiki Kabushiki Kaisha; and Toyota Jidosha Kogyo Kabushiki Kaisha. Integrated valve device. 4,298,020, Cl. 137-315.000.
INCA Limited: *See—*
Tutty, Geoffrey C., 4,298,651, Cl. 428-307.000.
Industrial Technology Research Institute: *See—*
Chang, Ching-Te; and Su, Tsung-Tsan, 4,298,603, Cl. 424-230.000.
Industrie Pirelli S.p.A.: *See—*
Pirovano, Dante, 4,298,421, Cl. 156-460.000.
Industrie-Werke Karlsruhe Augsburg Aktiengesellschaft: *See—*
Zimmer, Ernst, 4,297,908, Cl. 74-469.000.
Ingersoll-Rand Company: *See—*
Luthi, Oscar, 4,297,794, Cl. 34-122.000.
Inoue, Akihiko: *See—*
Masaki, Masaru; Ito, Yoshinori; Inoue, Akihiko; and Toda, Munetaka, 4,297,867, Cl. 72-347.000.
Inoue Gomu Kogyo Kabushiki Kaisha: *See—*
Katoh, Hisanori, 4,298,640, Cl. 428-31.000.
Inoue-Japax Research Incorporated: *See—*
Inoue, Kiyoshi, 4,298,781, Cl. 219-69.00W.
Inoue, Kiyoshi, to Inoue-Japax Research Incorporated. Wire-cut electroerosion machine and method of operating same. 4,298,781, Cl. 219-69.00W.
Inoue, Tadanori: *See—*
Sano, Takezo; Inoue, Tadanori; and Uemura, Yukikazu, 4,297,945, Cl. 101-395.000.
Inoue, Yukio: *See—*
Fujimori, Kuniaki; Suzuka, Teruo; Inoue, Yukio; and Aizawa, Shiroo, 4,298,460, Cl. 208-121.000.

Insinger, Thomas H.: *See*—
Cochran, Jerry R.; Insinger, Thomas H.; Hollenbach, Gerald E.; Piskorz, Ronald F.; and Smith, Addison M., 4,298,765, Cl. 568-754.000.
Institut Francais du Petrole: *See*—
Colonna, Jean; Fitremann, Jean-Michel; Genin, Richard; and Sarda, Jean-Paul, 4,298,066, Cl. 166-300.000.
Durand, Jean-Pierre; and Petroff, Nicole, 4,298,472, Cl. 210-198.200.
Institut National de la Sante et de la Recherche Medicale (INSERM): *See*—
Nicolas, Jean C.; Terouanne, Beatrice; Descomps, Bernard; and De Paulet, Andre C., 4,298,686, Cl. 435-7.000.
Institute of Technology Precision Electrical Discharge Works: *See*—
Higuchi, Noboru; and Futamura, Shoji, 4,298,564, Cl. 264-177.00R.
Instrumentation Laboratory Inc.: *See*—
Ambers, Paul J., 4,298,026, Cl. 137-625.470.
Instruments S.A.: *See*—
Laude, Jean-Pierre, 4,298,845, Cl. 331-94.50C.
Insurance Technical Bureau, The: *See*—
Munday, George; Slater, David H.; Tyley, Leonard R. T.; Berenblut, Brian J.; and Whitehouse, Harry B., 4,298,955, Cl. 364-900.000.
Intercontrole S.A.: *See*—
Adamowski, Andrev, 4,298,054, Cl. 165-1.000.
International Business Machines Corporation: *See*—
Argumedo, Armando J.; Brock, George W.; and Losee, Paul D., 4,298,899, Cl. 360-122.000.
Arter, Nelson K.; Devore, Ernest W.; Wills, Arthur B.; and Zelenka, Leslie R., 4,298,897, Cl. 360-39.000.
Barnes, Johnny G.; Hurley, Patrick J.; and Miller, Gary W., 4,298,290, Cl. 400-3.000.
Berglund, Neil C.; Kempke, William G.; and Richardson, William C., 4,298,927, Cl. 364-200.000.
Bigelow, George A.; Rehage, Ted A.; and Shook, Frankie S., 4,298,954, Cl. 364-900.000.
Capozzi, Anthony J., 4,298,929, Cl. 364-200.000.
Hajdu, Johann; and Knauft, Guenter, 4,298,980, Cl. 371-25.000.
Makosch, Geunter; and Solf, Bernhard, 4,298,283, Cl. 356-351.000.
Nuez, Jean-Paul; and Lebesnerais, Gerard, 4,298,401, Cl. 148-1.500.
Sams, Jack G., 4,298,932, Cl. 364-200.000.
International Flavors & Fragrances Inc.: *See*—
Yoshida, Takao, 4,298,542, Cl. 260-429.00R.
International Harvester Company: *See*—
Klem, John E.; and Nelson, Daniel E., 4,297,914, Cl. 74-532.000.
Klem, John E., 4,297,915, Cl. 74-532.000.
International Minerals & Chemical Corp.: *See*—
Hunsucker, Jerry H., 4,298,638, Cl. 427-385.500.
International Pigment Processing Corp.: *See*—
Formica, Francis A.; and Izenberg, James B., 4,298,399, Cl. 106-309.000.
International Power Technology, Inc.: *See*—
Cheng, Dah Y., 4,297,841, Cl. 60-39.300.
International Telephone and Telegraph Corporation: *See*—
Dishal, Milton, 4,298,841, Cl. 328-117.000.
Naus, Hubert W.; and Bouvier, Alfred J., 4,298,566, Cl. 264-317.000.
Intex Products, Inc.: *See*—
Saus, J. Arthur; and McCartney, Larry P., 4,298,405, Cl. 148-6.15R.
Inventio AG: *See*—
Suss, Hans G.; and Kiml, Jiri, 4,298,100, Cl. 187-29.00R.
Ionics, Incorporated: *See*—
Giuffrida, Anthony J., 4,298,442, Cl. 204-180.00P.
Ippen, Joachim: *See*—
Staab, Heinz; and Ippen, Joachim, 4,298,751, Cl. 549-11.000.
IRD Mechanalysis, Inc.: *See*—
Davis, Dean T., 4,298,948, Cl. 364-603.000.
Irisova, Natalija: *See*—
Bielska-Lewandowska, Halina; Irisova, Natalija; Jung, Grzegorz; Lewandowski, Stanislaw J.; Prohorov, Aleksandr; Sobolewski, Roman; and Vinogradov, Eugenij, 4,298,990, Cl. 455-325.000.
Irvin, Ronald D.; Runyan, Steven R.; and Sherlock, Hugh P. Microphonograph record. 4,298,976, Cl. 369-282.000.
Isaacs, Harold. Merchandise order picking system and work table. 4,298,099, Cl. 186-58.000.
Ishibashi, Kazuhisa: *See*—
Ohmi, Hidehiko; and Ishibashi, Kazuhisa, 4,298,320, Cl. 425-110.000.
Ishigaki, Tamotsu: *See*—
Etoh, Kunihiko; Ishigaki, Tamotsu; and Niwa, Kuniyuki, 4,298,928, Cl. 364-200.000.
Ishihara, Theodore M.; and Kulkens, John F., to Zenith Radio Corporation. Cathode ray tube socket with controlled spark gaps. 4,298,815, Cl. 313-325.000.
Ishii, Haruo, to Asahi Kogaku Kogyo Kabushiki Kaisha. Single-pivot type focal-plane shutter drum mechanism. 4,298,264, Cl. 354-242.000.
Ishii, Hideo: *See*—
Oide, Kunimasa; and Ishii, Hideo, 4,298,121, Cl. 206-347.000.
Ishii, Shinzo: *See*—
Iida, Takao; Shirahata, Kunikatsu; Ishii, Shinzo; Okachi, Ryo; and Nara, Takashi, 4,298,690, Cl. 435-80.000.
Ishikawa, Hajime: *See*—
Nozaki, Takao; Ito, Takashi; Arakawa, Hideki; Ishikawa, Hajime; and Shinoda, Masaichi, 4,298,629, Cl. 427-39.000.
Ishikawa, Masaru: *See*—
Honda, Akira; Anzai, Takanori; Kitamura, Minoru; Ishikawa, Masaru; and Mizooka, Seishi, 4,298,147, Cl. 222-601.000.
Ishimaru, Kenji: *See*—
Nishikawa, Osamu; Ishimaru, Kenji; Takeshita, Toru; and Tsuruta, Hideki, 4,298,537, Cl. 260-397.200.
Ishimoto, Osamu: *See*—
Tsuda, Hiroshi; Miyashita, Kiyoshi; Kimura, Katsuhiko; Arima, Heihachi; and Ishimoto, Osamu, 4,298,276, Cl. 355-72.000.
Ishioka, Yozo: *See*—
Saiki, Yukihiro; Kumazawa, Eitaro; and Ishioka, Yozo, 4,297,793, Cl. 34-56.000.
Ishizuka, Shinichi; and Sugimoto, Kenji. Turret head for a lathe. 4,297,925, Cl. 82-2.00R.
Isobox-Barbier: *See*—
Soulier, Joel, 4,298,324, Cl. 425-174.80E.
Isowa, Eiichi, to Isowa Industry Co., Ltd. Device for spreading paste on paperboard in a corrugated board manufacturing apparatus. 4,297,968, Cl. 118-249.000.
Isowa Industry Co., Ltd.: *See*—
Isowa, Eiichi, 4,297,968, Cl. 118-249.000.
Israel, Allan D.; and Fowler, Herbert H. Cesium vapor thermionic current generator. 4,298,768, Cl. 136-202.000.
Isselmann, Piet H., to Akzona Incorporated. Accelerator for setting of cements. 4,298,392, Cl. 106-98.000.
Ito, Homu, to Takeda Chemical Industries, Ltd. Virus hemagglutination-inhibition reaction. 4,298,346, Cl. 23-230.00B.
Ito, Isao, to NGK Insulators, Ltd. Apparatus for measuring contour configuration of articles. 4,298,285, Cl. 356-376.000.
Ito, Masaru: *See*—
Yamamoto, Manabu; Murayama, Seiichi; Ito, Masaru; and Oishi, Kounosuke, 4,298,284, Cl. 356-368.000.
Ito, Ryoichi: *See*—
Tsunoda, Yoshito; Tatsuno, Kimio; Miyauchi, Toshimitsu; Aiki, Kunio; and Ito, Ryoichi, 4,298,974, Cl. 369-45.000.
Ito, Shoji: *See*—
Inada, Masami; Kitamura, Kazuhiko; Ito, Shoji; Nonoyama, Takao; and Tsuji, Riichi, 4,298,020, Cl. 137-315.000.
Ito, Takashi, to Fujitsu Limited. Method of manufacturing semiconductor devices. 4,297,782, Cl. 29-571.000.
Ito, Takashi: *See*—
Nozaki, Takao; Ito, Takashi; Arakawa, Hideki; Ishikawa, Hajime; and Shinoda, Masaichi, 4,298,629, Cl. 427-39.000.
Ito, Yoshinori: *See*—
Masaki, Masaru; Ito, Yoshinori; Inoue, Akihiko; and Toda, Munetaka, 4,297,867, Cl. 72-347.000.
ITT Industries, Inc.: *See*—
Vagman, Selmer, 4,297,784, Cl. 29-596.000.
Ivory, Dawn M., to Allied Corporation. Time-temperature indicator composition. 4,298,348, Cl. 23-230.00R.
Iwamura, Seishiro, to Mitsubishi Denki Kabushiki Kaisha. Reflection type screen. 4,298,246, Cl. 350-122.000.
Iwano, Haruhiko: *See*—
Kubotera, Kikuo; Mizuki, Eiichi; Satomura, Masato; Iwano, Haruhiko; and Fujiwara, Tadahiro, 4,298,673, Cl. 430-204.000.
Iwasa, Toshio: *See*—
Shimizu, Kunitoshi; Takamura, Masakazu; and Iwasa, Toshio, 4,298,644, Cl. 428-91.000.
Iwasaki, Hirokazu; and Takahashi, Hideo, to Showa Denko K.K. Process for production of 3-hydroxy-3-methylphthalide or the nuclearly substituted derivatives thereof. 4,298,530, Cl. 260-343.30R.
Iwasaki, Iwao, to University of Minnesota, The Regents of the. Selective flocculation, magnetic separation, and flotation of ores. 4,298,169, Cl. 241-16.000.
Izenberg, James B.: *See*—
Formica, Francis A.; and Izenberg, James B., 4,298,399, Cl. 106-309.000.
Izumi, Kaichi: *See*—
Ohba, Kenjiro; Izumi, Kaichi; and Yasuda, Shinichiro, 4,298,489, Cl. 252-78.500.
J. Aichelin: *See*—
Wunning, Joachim, 4,298,333, Cl. 431-11.000.
J. C. Schumacher Co.: *See*—
Schumacher, John C.; and Lagendijk, Andre, 4,298,037, Cl. 141-1.000.
J.G.L. Chemicals Ltd.: *See*—
Thankachan, Chacko; Ritchie, John G.; Sahayada, Eugene; and Sengupta, Asok, 4,298,658, Cl. 428-425.100.
Jac. Jacobsen A/S: *See*—
Krogsrud, Jens C.; and Soerensen, Kai O., 4,298,921, Cl. 362-346.000.
Jackson, Joseph F., to Thomas Broadbent & Sons Limited. Solid bowl decanter centrifuges. 4,298,160, Cl. 233-7.000.
Jackson, Melvin R.: *See*—
Hirsch, Harold H.; and Jackson, Melvin R., 4,298,816, Cl. 313-330.000.
Jackson, Ronald A.; and Maruscak, John, to Black & Decker Inc. Work support frame. 4,298,095, Cl. 182-184.000.
Jaco Manufacturing Company: *See*—
Davies, Irving W., 4,298,222, Cl. 285-341.000.
Jacobi, Manfred: *See*—
Lechtken, Peter; Buethe, Ingolf; Jacobi, Manfred; and Trimborn, Werner, 4,298,738, Cl. 546-22.000.
Jagenberg-Werke AG: *See*—
Zodrow, Rudolf, 4,298,422, Cl. 156-568.000.

James, Kenneth: *See*—
Galleymore, Harry R.; James, Kenneth; Jones, Haydn F.; Bhardwaj, Chaman L.; Plant, James S., deceased; and Plant, Aline P., administrator, 4,298,730, Cl. 536-119.000.
James, Robin H.; and Spooner, James A., to United Kingdom Atomic Energy Authority. Processes for reducing the oxygen content of metal oxides. 4,298,495, Cl. 252-643.000.
James, Ronald D.: *See*—
Samis, James M.; Waechter, Walter C.; and James, Ronald D., 4,298,621, Cl. 426-55.000.
Jamison, Merle A. Hitch pin. 4,298,212, Cl. 280-515.000.
Jansen, Heinz: *See*—
Russ, Peter; and Jansen, Heinz, 4,297,926, Cl. 82-9.000.
Janssen, Paul H. Fencing device. 4,298,185, Cl. 256-41.000.
Japan Natural Food Co. Ltd.: *See*—
Hagiwara, Yoshihide, 4,298,620, Cl. 426-44.000.
Japan Spectroscopic Co. Ltd: *See*—
Takeuchi, Tsugio; Tsuge, Shin; Hirata, Yukio; and Mochizuki, Koichi, 4,298,795, Cl. 250-282.000.
Jatkar, Arun D.: *See*—
Joshi, Ashok V.; Jatkar, Arun D.; and Sholette, William P., 4,298,664, Cl. 429-191.000.
Jelmax Co., Ltd.: *See*—
Kurose, Hideo, 4,298,848, Cl. 333-181.000.
Jenaer Glaswerk Schott & Gen.: *See*—
Sack, Werner, 4,298,388, Cl. 501-15.000.
Jennings, J. Thomas. Technique and device for measuring fluids including finger valve and filler mechanism. 4,298,038, Cl. 141-2.000.
Jermansen, Torris G.: *See*—
Oswald, Alexis A.; Jermansen, Torris G.; Westner, Andrew A.; and Huang, I-Der, 4,298,541, Cl. 260-429.00R.
Jerrold Electronics Corp.: *See*—
Dages, Charles L., 4,298,988, Cl. 455-182.000.
Jet Research Center, Inc.: *See*—
Regalbuto, John A.; and Christopher, Glenn B., 4,298,063, Cl. 166-55.000.
Jikahara, Tomo: *See*—
Umezawa, Hamao; Umezawa, Sumio; Tsuchiya, Tsutomu; Jikahara, Tomo; and Miyake, Toshiaki, 4,298,727, Cl. 536-10.000.
Jinkins, Danny R., to Black & Decker Inc. Seal. 4,298,204, Cl. 277-165.000.
Johansson, Kjell A. I. Apparatus for unwinding of a material web. 4,298,173, Cl. 242-58.000.
Johns-Manville Corporation: *See*—
Weinstein, Larry J., 4,297,893, Cl. 73-861.000.
Johnson, Curtiss S., Jr., to C. Sherman Johnson Company, Inc. Hinged deck cleat assembly. 4,297,962, Cl. 114-218.000.
Johnson, Fontain M., Jr., to Weaver Shipyard and Drydock, Inc. Outrigger-stabilized floating crane system. 4,297,961, Cl. 114-123.000.
Johnson, Lauren K.; and Thompson, David A., to Corning Glass Works. High transmission glasses for solar applications. 4,298,389, Cl. 501-77.000.
Johnson, Peter D., to General Electric Company. High intensity discharge lamps with uniform color. 4,298,813, Cl. 313-229.000.
Johnson, Raynor A.; and Barrow, Ralph M., Jr., to American Industrial Research. Flexible film air pallet for material movement. 4,298,083, Cl. 180-125.000.
Johnson, Robert A.: *See*—
Hennenfent, Douglas J.; Johnson, Robert A.; and Holmstrand, Allan L., 4,297,781, Cl. 29-467.000.
Johnson, Walter E., Jr.: *See*—
Ehmann, William J.; and Johnson, Walter E., Jr., 4,298,762, Cl. 568-433.000.
Johnston, Paul M., to Westinghouse Electric Corp. Programmable AC electric energy meter having radiation responsive external data interface. 4,298,839, Cl. 324-157.000.
Jones, Anthony E., to Brimec (U.K.) Limited. Vehicles with demountable bodies. 4,298,304, Cl. 414-492.000.
Jones, Eirwyn; and Mitchell, Michael I., to Imperial Chemical Industries Limited. Electric igniter. 4,297,947, Cl. 361-248.000.
Jones, Haydn F.: *See*—
Galleymore, Harry R.; James, Kenneth; Jones, Haydn F.; Bhardwaj, Chaman L.; Plant, James S., deceased; and Plant, Aline P., administrator, 4,298,730, Cl. 536-119.000.
Jones, James P. B.: *See*—
Watson, James H. P.; and Jones, James P. B., 4,298,478, Cl. 210-695.000.
Jones, Lawrence T.; Sims, Anson; Howden, Ashley G.; Knighton, Mark S.; and Kingsbury, LC James, to California R & D Center. Toy oven assembly. 4,298,788, Cl. 219-386.000.
Jones, Thomas P.: *See*—
Wright, Basil M.; and Jones, Thomas P., 4,297,871, Cl. 73-23.000.
Jordan, David R.: *See*—
Bradford, Larry L.; Jordan, David R.; and Williams, Kenneth W., 4,298,557, Cl. 264-51.000.
Jordan, Heinrich: *See*—
Knabe, Uwe; Sindermann, Siegmar; and Jordan, Heinrich, 4,298,039, Cl. 141-90.000.
Joshi, Ashok V.; Jatkar, Arun D.; and Sholette, William P., to Ray-O-Vac Corporation. Phosphorus-containing solid state electrolyte. 4,298,664, Cl. 429-191.000.
Jovanovics, Karola; and Gorog, Sandor, to Richter Gedeon Vegyeszeti Gyar RT. Bis-indole-alkaloid. 4,298,525, Cl. 260-244.400.
Joyce, John F., to National-Standard Company. Low viscosity composition for forming shaped bodies. 4,298,383, Cl. 75-211.000.
Jung, Grzegorz: *See*—
Bielska-Lewandowska, Halina; Irisova, Natalija; Jung, Grzegorz; Lewandowski, Stanislaw J.; Prohorov, Aleksandr; Sobolewski, Roman; and Vinogradov, Eugenij, 4,298,990, Cl. 455-325.000.
Jusinskas, Julius, Jr., to GTE Automatic Electric Labs Inc. Call waiting signal arrangement. 4,298,774, Cl. 179-18.0BG.
Jussen, Hilmar: *See*—
Bauer, Erwin; Davids, Ralf; Gotz, Gerhard; Jussen, Hilmar; Arndt, Heinrich; Kummel, Louis; Morhart, Rudolf; and Pollak-Banda, Erich, 4,297,917, Cl. 74-665.00G.
Justice, James W. H.; and Nahemow, Martin D., to Westinghouse Electric Corp. High frequency electrodeless lamp having a gapped magnetic core and method. 4,298,828, Cl. 315-248.000.
Kabushiki Kaisha Komatsu Seisakusho: *See*—
Nagai, Shunichi; and Higashi, Hidekazu, 4,298,114, Cl. 192-129.00A.
Kabushiki Kaisha Osaka Packing Seizosho: *See*—
Kubo, Kazuhiko; Takahashi, Akira; and Oohashi, Kenichi, 4,298,386, Cl. 501-80.000.
Kabushiki Kaisha Yakult Honsha: *See*—
Mutai, Masahiko; Mada, Mitsuo; and Shimada, Kiyohiro, 4,298,619, Cl. 426-43.000.
Kado, Satoshi: *See*—
Ikeno, Teruo; Kado, Satoshi; Ayusawa, Saburo; Kawasaki, Hironobu; and Watanabe, Takashi, 4,298,661, Cl. 428-623.000.
Kahn, Harvey R., to Alan I. Gerald Corporation. Firearm with interchangeable barrels and ammunition cylinders. 4,297,801, Cl. 42-59.000.
Kallies, Karl-Heinz, to Veb Arzneimittelwerk Dresden. Test device for the detection and determination of glucose. 4,298,688, Cl. 435-14.000.
Kaman Aerospace Corporation: *See*—
Bossler, Robert B., Jr.; and Hardersen, Charles P., 4,297,907, Cl. 74-417.000.
Kamibayashi, Tetsusaburo: *See*—
Kobayashi, Toshihiko; and Kamibayashi, Tetsusaburo, 4,298,772, Cl. 178-18.000.
Kaminski, Joan M.: *See*—
Horodysky, Andrew G.; and Kaminski, Joan M., 4,298,484, Cl. 252-46.700.
Horodysky, Andrew G.; and Kaminski, Joan M., 4,298,486, Cl. 252-49.600.
Kamleitner, Ewald, to Motoren- und Turbinen-Union Friedrichshafen GmbH. Split control rack. 4,297,979, Cl. 123-372.000.
Kanbar, Maurice S. Tangram game assembly. 4,298,200, Cl. 273-157.00R.
Kanbe, Junichiro: *See*—
Tajima, Hatsuo; Hosono, Nagao; and Kanbe, Junichiro, 4,297,970, Cl. 118-652.000.
Kanegafuchi Kagaku Kogyo Kabushiki Kaisha: *See*—
Ueno, Takashi; and Nakamura, Kyoichi, 4,298,706, Cl. 521-92.000.
Kaneko, Fumihiko; Nitta, Koichi; and Saito, Kouichi, to Murata Manufacturing Co., Ltd. Chip-like electronic component series and method for supplying chip-like electronic components. 4,298,120, Cl. 206-329.000.
Kaneko, Yutaka; and Fukuda, Mitsuhisa, to Ricoh Company, Ltd. Information recording method and apparatus. 4,298,244, Cl. 350-3.780.
Kang, Kenneth S.: *See*—
Veeder, George T.; and Kang, Kenneth S., 4,298,691, Cl. 435-101.000.
Kanomata, Ichiro: *See*—
Suzuki, Keizo; Okudaira, Sadayuki; Nishimatsu, Shigeru; and Kanomata, Ichiro, 4,298,419, Cl. 156-345.000.
Kanzaki Paper Mfg. Co., Ltd.: *See*—
Suzuki, Kuzuhiko; Fujiki, Yasuhiro; Kitahori, Tojiro; and Takada, Akira, 4,298,652, Cl. 428-323.000.
Kao Soap Co., Ltd.: *See*—
Ohba, Kenjiro; Izumi, Kaichi; and Yasuda, Shinichiro, 4,298,489, Cl. 252-78.500.
Kapitany, Robert A.: *See*—
Acres, Stephen D.; and Kapitany, Robert A., 4,298,597, Cl. 424-92.000.
Kapur, Vijay K., to Atlantic Richfield Company. Silicon purification. 4,298,587, Cl. 423-350.000.
Kapuscinski, Marek; and Gervais, Michel, to Northern Telecom Ltd. Method of manufacturing electrically insulated conductors with ultra-violet cured coatings. 4,298,630, Cl. 427-44.000.
Karasawa, Yukinori, to Tokyo Kogaku Kikai Kabushiki Kaisha. Lamp house structure for illumination devices. 4,298,919, Cl. 362-226.000.
Kariya, Tadaaki: *See*—
Sakurada, Shuroku; Nakashima, Yoichi; Kojima, Isao; Yagi, Hideyuki; Kariya, Tadaaki; and Sugiyama, Masayoshi, 4,298,881, Cl. 357-38.000.
Karl Lautenschlager KG: *See*—
Lautenschlager, Reinhard, 4,297,763, Cl. 16-164.000.
Karl Mayer Textilmaschinenfabrik GmbH: *See*—
Blasberg, Helmar; and Wilkens, Christian, 4,297,858, Cl. 66-194.000.
Kashiwa, Norio: *See*—
Morita, Yoshinori; Toyota, Akinori; and Kashiwa, Norio, 4,298,713, Cl. 525-323.000.
Kassel, Karl-Heinz; Lutz, Manfred; Stuke, Josef; and Walsdorfer, Hubert, to Licentia Patent-Verwaltung-G.m.b.H. Tellurium layer allows vapor deposition of crystalline selenium thereon in making double layer electrophotographic record material. 4,298,671, Cl. 430-128.000.

Kasuga, Muneo: *See—*
Tsuda, Hiroshi; Miyashita, Kiyoshi; Nishikawa, Masaji; Shimizu, Akira; and Kasuga, Muneo, 4,298,270, Cl. 355-3.0SH.
Katakura, Hiroshi; and Tamura, Takashi, to Konishiroku Photo Industry Co., Ltd. Device for detachably attaching a master sheet to a drum. 4,298,278, Cl. 355-85.000.
Kataoka, Hiroyuki: *See—*
Arai, Yoshio; Kataoka, Hiroyuki; Suzuki, Isao; and Yokota, Shozo, 4,298,895, Cl. 358-284.000.
Kato, Fumio: *See—*
Sato, Isao; Kato, Fumio; Uchiyama, Yoshihiro; Iizuka, Nobuyuki; and Hata, Tsuneyuki, 4,297,843, Cl. 60-39.320.
Kato, Hironobu: *See—*
Tanaka, Etsuo; and Kato, Hironobu, 4,298,265, Cl. 354-246.000.
Kato, Yukio: *See—*
Hotta, Atsuo; and Kato, Yukio, 4,298,961, Cl. 365-179.000.
Katoh, Hisanori, to Inoue Gomu Kogyo Kabushiki Kaisha. Holdings for automobiles. 4,298,640, Cl. 428-31.000.
Katz, Saul N.; and Proscia, George E., to General Foods Corporation. Carbon-caffeine separation. 4,298,736, Cl. 544-274.000.
Katzer, Hans: *See—*
Kratel, Gunter; Katzer, Hans; Loskot, Stephan; Lang, Wilfried; and Weis, Klaus, 4,298,387, Cl. 501-92.000.
Kaufman, Kurt D., to Thomas C. Elder, Inc. 5'-Aminoalkyl-4',4-dialkylpsoralens. 4,298,614, Cl. 424-279.000.
Kaufmann, Frank H.; and Kramer, Charles F., to Steel Heddle Manufacturing Co. Shuttle grip. 4,298,032, Cl. 139-207.000.
Kaufmann, Meinolph: *See—*
Gloor, Ernst; Kaufmann, Meinolph; and Kmetz, Allan R., 4,298,249, Cl. 350-338.000.
Kawabata, Yasuhiro, to Aisin Seiki Kabushiki Kaisha. Air-fuel mixture control valve assembly. 4,297,984, Cl. 123-587.000.
Kawahara, Tsukasa: *See—*
Uchida, Mitsuo; Oguri, Yasuo; Saito, Junji; and Kawahara, Tsukasa, 4,298,561, Cl. 264-86.000.
Kawai, Kazuo; Yanagidaira, Hidetaka; and Tamori, Michitoshi, to Kokusai Denshin Denwa Kabushiki Kaisha. Automatic equalization system in FM communication circuit. 4,298,983, Cl. 375-12.000.
Kawakami, Takamasa: *See—*
Saito, Masao; Hosokawa, Motoyuki; Kawakami, Takamasa; and Murayama, Yuko, 4,298,545, Cl. 260-465.00H.
Kawakami, Youichi, to Mizue Kawakami. Water tap. 4,298,183, Cl. 251-263.000.
Kawakatsu, Kunio: *See—*
Genjida, Fumihide; Kawakatsu, Kunio; and Ii, Motohiko, 4,298,487, Cl. 252-75.000.
Kawakita, Kenji: *See—*
Ochiai, Michihiko; Okada, Taiiti; Aki, Osami; Morimoto, Akira; Kawakita, Kenji; and Matsushita, Yoshihiro, 4,298,606, Cl. 424-246.000.
Kawamura, Masaharu; Shigeta, Yoshihiro; Uchidoi, Masanori; Sugiura, Yoji; and Yamamoto, Hiroshi, to Canon Kabushiki Kaisha. Exposure control device for camera. 4,298,256, Cl. 354-23.00D.
Kawasaki, Hironobu: *See—*
Ikeno, Teruo; Kado, Satoshi; Ayusawa, Saburo; Kawasaki, Hironobu; and Watanabe, Takashi, 4,298,661, Cl. 428-623.000.
Kawasaki Jukogyo Kabushiki Kaisha: *See—*
Murakami, Keikichi, 4,298,378, Cl. 75-60.000.
Shitamori, Mamoru, 4,298,211, Cl. 280-297.000.
Kawasaki, Kishio; and Kishino, Takao, to Futaba Denshi Kogyo K.K. Fluorescent display device. 4,298,823, Cl. 313-497.000.
Kawase, Kaoru; and Hayakawa, Kiyoshi, to Agency of Industrial Science & Technology; and Ministry of International Trade & Industry. Method for manufacture of ion-exchange graft membrane. 4,298,698, Cl. 521-27.000.
Keene Corporation: *See—*
Metcalf, Paul T., II, 4,298,918, Cl. 362-217.000.
Keinosuke Aida: *See—*
Nakagawa, Takeo, 4,298,660, Cl. 428-599.000.
Keisler, Carl E. Hollow wall repair device. 4,297,823, Cl. 52-514.000.
Kelderman, Hendrik C.: *See—*
Van Berkel, Johannes; and Kelderman, Hendrik C., 4,298,757, Cl. 560-231.000.
Kella, George; and Kella, Michael D. Interlocking construction block. 4,297,816, Cl. 52-125.000.
Kella, Michael D.: *See—*
Kella, George; and Kella, Michael D., 4,297,816, Cl. 52-125.000.
Keller, Charles T., to Du Pont de Nemours, E. I., and Company. Sizing mandrel for thermoplastic netting. 4,298,329, Cl. 425-382.00N.
Keller, Egon; and Kreutz, Peter, to Passavant-Werke Michelbacher Huette. Centrifugal separator having heat transfer means. 4,298,359, Cl. 55-269.000.
Keller, Jakob, to BBC Brown, Boveri & Company, Limited. Diffuser resonances. 4,298,088, Cl. 181-211.000.
Keller, Kenneth F.: *See—*
Doyle, Ronald J.; Keller, Kenneth F.; and Schaefer, Robert L., 4,298,689, Cl. 435-34.000.
Kelley Manufacturing Co.: *See—*
Whitfield, Carroll J.; and Lastinger, Anthony W., 4,298,071, Cl. 172-624.000.
Kelly, Frank M.: *See—*
Rumberger, Earl E.; and Kelly, Frank M., 4,297,778, Cl. 29-426.400.
Kelly, Robert C.; and Wierenga, Wendell, to Upjohn Company, The. Method for preparing (αS,5S)-α-amino-3-chloro-2-isoxazoline-5-acetic acid (AT-125) and analogs thereof. 4,298,744, Cl. 548-240.000.
Kelsey-Hayes Company: *See—*
Rozmus, Walter J., 4,298,168, Cl. 239-659.000.
Kempe, Uwe: *See—*
Dockner, Toni; Kempe, Uwe; Krug, Herbert; Magnussen, Peter; Praetorius, Werner; and Szymanski, Hans J., 4,298,748, Cl. 548-347.000.
Kempke, William G.: *See—*
Berglund, Neil C.; Kempke, William G.; and Richardson, William C., 4,298,927, Cl. 364-200.000.
Kendall, John H., to McDonnell Douglas Corporation. Remote refueling station. 4,298,176, Cl. 244-135.00A.
Kennedy, Peter D.; and Piesinger, Gregory H., to Motorola Inc. Desired signal estimator for null steerer FM reception using FSK modulation. 4,298,871, Cl. 343-100.0SA.
Keritsis, Gus D.: *See—*
Semp, Bernard A.; Teng, Daniel M.; and Keritsis, Gus D., 4,298,013, Cl. 131-308.000.
Kernforschungsanlage Juelich GmbH: *See—*
Krauth, Axel; Maier, Horst R.; Phlmann, Hans-Juergen; Foerster, Siegfried; and Kleeman, Manfred, 4,298,059, Cl. 165-166.000.
Kernforschungsanlage Julich GmbH: *See—*
Ashtheimer, Ludwig; Schenk, Hans-Joachim; and Schwochau, Klaus, 4,298,577, Cl. 423-6.000.
Kerr, Edwin R.: *See—*
Dorawala, Tansukhlal G.; and Kerr, Edwin R., 4,298,452, Cl. 208-8.0LE.
Kessel, Carl R.: *See—*
Dauben, William G.; Kessel, Carl R.; and Takemura, Kazuo H., 4,298,752, Cl. 549-42.000.
Ketterer, Stanley J., to Singer Company, The. Anti-haloing throat plate. 4,297,957, Cl. 112-184.000.
Key Pharmaceuticals, Inc.: *See—*
Golub, Allyn L., 4,297,995, Cl. 128-156.000.
Khairulin, Edige R.: *See—*
Bochkarev, Ellin P.; Prokopov, Igor V.; Eljutin, Alexandr V.; Belsky, Arkady A.; Baryshnikova, Svetlana M.; Nasyrov, Nail Z.; Novikov, Nikolai A.; Khairulin, Edige R.; Zvyagin, Mikhail S.; Abrjutin, Vladimir N.; Konstantinova, Ljubov I.; Ljubimova, Nina A.; and Gorbacheva, Nadezhda S., 4,298,380, Cl. 75-101.0BE.
Kidder, Kenneth B.: *See—*
Clark, Rodney L.; Kidder, Kenneth B.; and Peterson, Gary A., 4,298,334, Cl. 431-24.000.
Kiehs, Karl: *See—*
Schwarz, Gerd-Ulrich; Kiehs, Karl; Boelf, Walter; and Adolphi, Heinrich, 4,298,615, Cl. 424-285.000.
Kienzle Apparate GmbH: *See—*
Muller, Helmuth; and Herrmann, Lother, 4,298,791, Cl. 235-132.00R.
Kihlberg, Yngve R.; and Sjoholm, Johan E. P., to Kommanditbolaget United Stirling AB & CO. Tubular heat-exchanger. 4,298,057, Cl. 165-159.000.
Kim, Hong Z.: *See—*
Bulloch, David K.; and Kim, Hong Z., 4,298,681, Cl. 430-466.000.
Kimak, Theodore: *See—*
Haemer, Laurence F.; and Kimak, Theodore, 4,298,646, Cl. 428-159.000.
Kimata, Kei; Yasuda, Yoshinobu; Yoshida, Isamu; and Saruta, Masahiro, to NTN Toyo Bearing Company, Limited. Fuel flow rate measuring device. 4,297,981, Cl. 123-454.000.
Kimberly-Clark Corporation: *See—*
Meitner, Gary H., 4,298,649, Cl. 428-198.000.
Schmidt, George F.; and Weber, Robert E., 4,298,668, Cl. 429-250.000.
Kiml, Jiri: *See—*
Suss, Hans G.; and Kiml, Jiri, 4,298,100, Cl. 187-29.00R.
Kimura, Katsuhiko: *See—*
Tsuda, Hiroshi; Miyashita, Kiyoshi; Kimura, Katsuhiko; Arima, Heihachi; and Ishimoto, Osamu, 4,298,276, Cl. 355-72.000.
Kimura, Takao: *See—*
Oi, Nobuhiro; Aoki, Bunya; Shinozaki, Teizo; Moro, Kanji; Matsunaga, Isao; Noto, Takao; Nebashi, Toshiyuki; Harada, Yusuke; Endo, Hisao; Kimura, Takao; Okazaki, Hiroshi; Ogawa, Haruki; and Shindo, Minoru, 4,298,605, Cl. 424-246.000.
Kindl, Bruno: *See—*
Casson, Harold V.; Crabtree, Grant G.; Kindl, Bruno; and Noonan, Edward B., 4,298,416, Cl. 156-87.000.
Kinetico, Inc.: *See—*
Prior, William C.; and Brown, Keith E., 4,298,025, Cl. 137-624.140.
Kinevsky, Valery N.: *See—*
Avdeenko, Boris K.; Bronfman, Aron I.; Vitkin, Alexandr L.; Zelentsov, Boris N.; Kinevsky, Valery N.; and Rozet, Vladimir E., 4,298,900, Cl. 361-127.000.
Kingsbury, LC James: *See—*
Jones, Lawrence T.; Sims, Anson; Howden, Ashley G.; Knighton, Mark S.; and Kingsbury, LC James, 4,298,788, Cl. 219-386.000.
Kinnander, Bo; Landa, Torstein; and Mansson, Ragnar, to AB Asea Atom. Means for supplying feed water to a substantially cylindrical, vertical reactor tank. 4,298,433, Cl. 376-286.000.
Kirby, Archie D. Electronic tuning aid with digital readout. 4,297,938, Cl. 84-455.000.
Kircher, Morton S.: *See—*
Specht, Steven J.; and Kircher, Morton S., 4,297,923, Cl. 81-57.410.
Kishino, Takao: *See—*
Kawasaki, Kishio; and Kishino, Takao, 4,298,823, Cl. 313-497.000.

Kita, Toru: *See—*
Nagaishi, Hatsuo; and Kita, Toru, 4,297,894, Cl. 73-861.030.
Kitagawa, Masahiro, to Olympus Optical Company Ltd. Camera automatically synchronized with an electronic flash. 4,298,261, Cl. 354-139.000.
Kitaguchi, Tadashi: *See—*
Ueda, Ikuo; Takaya, Takao; Kobayashi, Masakazu; Masugi, Takashi; Takasugi, Hisashi; Kochi, Hiromu; and Kitaguchi, Tadashi, 4,298,529, Cl. 260-340.90R.
Kitahori, Tojiro: *See—*
Suzuki, Kuzuhiko; Fujiki, Yasuhiro; Kitahori, Tojiro; and Takada, Akira, 4,298,652, Cl. 428-323.000.
Kitamura, Kazuhiko: *See—*
Inada, Masami; Kitamura, Kazuhiko; Ito, Shoji; Nonoyama, Takao; and Tsuji, Riichi, 4,298,020, Cl. 137-315.000.
Kitamura, Minoru: *See—*
Honda, Akira; Anzai, Takanori; Kitamura, Minoru; Ishikawa, Masaru; and Mizuoka, Seishi, 4,298,147, Cl. 222-601.000.
Kitamura, Osamu: *See—*
Ohashi, Tetsro; Kitamura, Osamu; Fujii, Hiromu; Mineyuki, Seizo; and Takeuchi, Eiichi, 4,298,050, Cl. 164-468.000.
Kitani, Teruo: *See—*
Baba, Takaaki; Sagishima, Takayuki; Kitani, Teruo; and Sasaki, Reiichi, 4,298,891, Cl. 358-183.000.
Kitrell, John V. Portable resuscitation apparatus. 4,297,999, Cl. 128-205.160.
Kivits, Petrus J.: *See—*
van der Veen, Jan; Kivits, Petrus J.; and de Bont, Marinus R. J., 4,298,975, Cl. 369-94.000.
Klauke, Erich: *See—*
Hagemann, Hermann; Klauke, Erich; and Petruck, Gerd-Michael, 4,298,761, Cl. 568-44.000.
Kleeman, Manfred: *See—*
Krauth, Axel; Maier, Horst R.; Phlmann, Hans-Juergen; Foerster, Siegfried; and Kleeman, Manfred, 4,298,059, Cl. 165-166.000.
Klein, Theodore J.: *See—*
Ballard, Arthur H.; and Klein, Theodore J., 4,298,985, Cl. 375-82.000.
Kleine, Donald R.: *See—*
Wells, John J., Jr.; and Kleine, Donald R., 4,297,932, Cl. 83-581.100.
Klem, John E.; and Nelson, Daniel E., to International Harvester Company. Control lever gate with lever restraint. 4,297,914, Cl. 74-532.000.
Klem, John E., to International Harvester Company. Positive lever location maintenance trap. 4,297,915, Cl. 74-532.000.
Klockner-Humboldt-Deutz AG: *See—*
Brachthauser, Kunibert; and Herchenbach, Horst, 4,298,393, Cl. 106-100.000.
Epper, Wolfgang; and Heckman, Wolfgang, 4,298,159, Cl. 233-7.000.
Herchenbach, Horst; and Lechner, Bartl, 4,298,340, Cl. 432-58.000.
Klomp, Gregory F.: *See—*
Ronel, Samuel H.; D'Andrea, Mark J.; Dobelle, William H.; Klomp, Gregory F.; and Hashiguchi, Hiroshi, 4,298,002, Cl. 128-260.000.
Kmetz, Allan R.: *See—*
Gloor, Ernst; Kaufmann, Meinolph; and Kmetz, Allan R., 4,298,249, Cl. 350-338.000.
Knabe, Uwe; Sindermann, Siegmar; and Jordan, Heinrich, to Holstein and Kappert GmbH. Revolving container processing plant. 4,298,039, Cl. 141-90.000.
Knauft, Guenter: *See—*
Hajdu, Johann; and Knauft, Guenter, 4,298,980, Cl. 371-25.000.
Knell, Bernhard; and Rohrig, Adalbert, to Concast AG. Continuous casting installation containing open-ended mold. 4,298,052, Cl. 164-416.000.
Kness, Arnold A.: *See—*
Kness, Lester E.; Kness, Marvin E.; and Kness, Arnold A., 4,297,805, Cl. 43-83.500.
Kness, Lester E.; Kness, Marvin E.; and Kness, Arnold A., to Kness Manufacturing Co., Inc. Animal trap. 4,297,805, Cl. 43-83.500.
Kness Manufacturing Co., Inc.: *See—*
Kness, Lester E.; Kness, Marvin E.; and Kness, Arnold A., 4,297,805, Cl. 43-83.500.
Kness, Marvin E.: *See—*
Kness, Lester E.; Kness, Marvin E.; and Kness, Arnold A., 4,297,805, Cl. 43-83.500.
Knight, Peter R., to RCA Corporation. Horizontal deflection generator and driver circuit. 4,298,830, Cl. 315-411.000.
Knighton, Mark S.: *See—*
Jones, Lawrence T.; Sims, Anson; Howden, Ashley G.; Knighton, Mark S.; and Kingsbury, LC James, 4,298,788, Cl. 219-386.000.
Knopf, Herbert; Spahrkas, Heinrich; and Luck, Wolfhard, to Bayer Aktiengesellschaft. Age resistant chrome tanning agents. 4,298,344, Cl. 8-94.260.
Knorr-Bremse GmbH: *See—*
Grunert, Wolfgang; Huber, Johann; and Rheindt, Kurt, 4,298,184, Cl. 251-357.000.
Knoth, Werner D.; and Munker, Helmut. Process and apparatus for making hollow glassware. 4,298,371, Cl. 65-79.000.
Knowles, Albert H. Process and apparatus for increasing the utilization of fish feed in fish farming ponds and the like. 4,297,973, Cl. 119-3.000.
Knowles, Richard P., to Lucas Industries Limited. Electric starting aids for internal combustion engines. 4,297,785, Cl. 29-611.000.
Kobayashi, Akio: *See—*
Ohya, Masaki; Kobayashi, Akio; Ogiwara, Takeo; and Satake, Yoshikatsu, 4,298,710, Cl. 525-5.000.
Kobayashi, Koji: *See—*
Moroto, Shuzo; and Kobayashi, Koji, 4,298,085, Cl. 180-247.000.
Kobayashi, Masakazu: *See—*
Ueda, Ikuo; Takaya, Takao; Kobayashi, Masakazu; Masugi, Takashi; Takasugi, Hisashi; Kochi, Hiromu; and Kitaguchi, Tadashi, 4,298,529, Cl. 260-340.90R.
Kobayashi, Takuo; and Takashima, Yasuyuki, to Sandvik Conveyor GmbH. Apparatus for discharging articles from conveyor belts. 4,298,117, Cl. 198-367.000.
Kobayashi, Toshihiko; and Kamibayashi, Tetsusaburo, to Kokusai Denshin Denwa Kabushiki Kaisha. Coordinate reader using adjustable magnetostrictive oscillations. 4,298,772, Cl. 178-18.000.
Kobe Steel, Ltd.: *See—*
Narita, Kiichi; Mori, Takasuke; Ayata, Kenzo; and Makino, Takehisa, 4,298,376, Cl. 75-49.000.
Koch, Karl-Heinz: *See—*
Kuhn, Karl-Dieter; and Koch, Karl-Heinz, 4,298,579, Cl. 423-11.000.
Kochi, Hiromu: *See—*
Ueda, Ikuo; Takaya, Takao; Kobayashi, Masakazu; Masugi, Takashi; Takasugi, Hisashi; Kochi, Hiromu; and Kitaguchi, Tadashi, 4,298,529, Cl. 260-340.90R.
Koegel, Robert 3.: *See—*
Lange, Ronald E.; and Koegel, Robert J., 4,298,935, Cl. 364-200.000.
Koenig, Philip C., to Boeing Company, The. Electronic conduction cooling clamp. 4,298,904, Cl. 361-386.000.
Koga, Keiichiro: *See—*
Morokawa, Shigeru; and Koga, Keiichiro, 4,298,971, Cl. 368-204.000.
Kogo, Hiroshi; Tonooka, Mamoru; Aoki, Teruhisa; Ando, Shigeo; and Tomiyama, Raiji, to Nissan Motor Company, Limited. Directivity display device and method. 4,298,965, Cl. 367-13.000.
Kojima, Isao: *See—*
Sakurada, Shuroku; Nakashima, Yoichi; Kojima, Isao; Yagi, Hideyuki; Kariya, Tadaaki; and Sugiyama, Masayoshi, 4,298,881, Cl. 357-38.000.
Kojima, Noriatsu. Flexible packing for sealing pipeline joints. 4,298,206, Cl. 277-205.000.
Kokusai Denshin Denwa Kabushiki Kaisha: *See—*
Kawai, Kazuo; Yanagidaira, Hidetaka; and Tamori, Michitoshi, 4,298,983, Cl. 375-12.000.
Kobayashi, Toshihiko; and Kamibayashi, Tetsusaburo, 4,298,772, Cl. 178-18.000.
Kokusan Denki Co., Ltd.: *See—*
Boyama, Kimihiro, 4,297,977, Cl. 123-320.000.
Komatsu, Shigeru; Takahashi, Satoshi; and Wakatsuki, Masao, to Tokyo Shibaura Electric Co., Ltd. Plastic material package semiconductor device having a mechanically stable mounting unit for a semiconductor pellet. 4,298,883, Cl. 357-72.000.
Komatsubara, Michimasa: *See—*
Someno, Noboru; Komatsubara, Michimasa; and Toyoshima, Masakatsu, 4,298,989, Cl. 455-183.000.
Komendowski, Henry: *See—*
Weiler, Gerhard H.; and Komendowski, Henry, 4,298,045, Cl. 150-0.500.
Komiyu, Takao: *See—*
Marushima, Giichi; Tanaka, Hiroshi; Tosaka, Umi; Takahashi, Shinkichi; and Komiyu, Takao, 4,298,669, Cl. 430-55.000.
Kommanditbolaget United Stirling AB & CO: *See—*
Kihlberg, Yngve R.; and Sjoholm, Johan E. P., 4,298,057, Cl. 165-159.000.
Komoriya, Susumu: *See—*
Nishizuka, Hiroshi; Komoriya, Susumu; Morita, Koyo; and Osakaya, Takayoshi, 4,298,273, Cl. 355-61.000.
Kondoh, Syunichi: *See—*
Shinozaki, Fumiaki; Washigawa, Yasuo; Ikeda, Tomoaki; Nakao, Sho; and Kondoh, Syunichi, 4,298,679, Cl. 430-281.000.
Konishi, Fumiya: *See—*
Matsuura, Shizuya; and Konishi, Fumiya, 4,298,803, Cl. 250-492.200.
Konishiroku Photo Industry Co., Ltd.: *See—*
Katakura, Hiroshi; and Tamura, Takashi, 4,298,278, Cl. 355-85.000.
Konno, Kazuhiko; Goh, Atsushi; and Sugaya, Kiyoshi, to Mitsubishi Petrochemical Co., Ltd. Process for the production of thiolcarbamate compounds. 4,298,740, Cl. 546-226.000.
Konstantinova, Ljubov I.: *See—*
Bochkarev, Ellin P.; Prokopov, Igor V.; Eljutin, Alexandr V.; Belsky, Arkady A.; Baryshnikova, Svetlana M.; Nasyrov, Nail Z.; Novikov, Nikolai A.; Khairulin, Edige R.; Zvyagin, Mikhail S.; Abrjutin, Vladimir N.; Konstantinova, Ljubov I.; Ljubimova, Nina A.; and Gorbacheva, Nadezhda S., 4,298,380, Cl. 75-101.0BE.
Koolatron Industries, Inc.: *See—*
Reed, Kingstone L. H., 4,297,850, Cl. 62-3.000.
Koomen, Joannes J. M.: *See—*
Salters, Roelof H. W.; and Koomen, Joannes J. M., 4,298,811, Cl. 307-296.00R.
Koppens Machinefabriek B.V.: *See—*
Koppens, Wilhelmus F. A., 4,298,327, Cl. 425-344.000.
Koppens, Wilhelmus F. A., to Koppens Machinefabriek B.V. Device for the manufacture of rod-shaped objects of dough-like, particularly edible, material. 4,298,327, Cl. 425-344.000.

Kor Incorporated: *See—*
Walsh, Fraser M., 4,298,347, Cl. 23-230.00B.
Koroteev, Anatoly Y.: *See—*
Paton, Boris E.; Kudinov, Vladimir M.; Volgin, Leonid A.; Petushkov, Vladimir G.; Bushtedt, Jury P.; Koroteev, Anatoly Y.; and Kotov, Viktor A., 4,297,946, Cl. 102-307.000.
Korpas, Thor-Harrald: *See—*
Rolstad, Erik; Korpas, Thor-Harrald; Leyse, Robert H.; and Smith, Robert D., 4,298,430, Cl. 376-247.000.
Koskenniska, Lasse A., to Farmos-Yhtma OY. Process for the isolation of β-sitosterol. 4,298,539, Cl. 260-397.250.
Koslar, Manfred, to Siemens Aktiengesellschaft. Hand held testing device for measuring different electrical quantities. 4,298,837, Cl. 324-72.500.
Kotov, Viktor A.: *See—*
Paton, Boris E.; Kudinov, Vladimir M.; Volgin, Leonid A.; Petushkov, Vladimir G.; Bushtedt, Jury P.; Koroteev, Anatoly Y.; and Kotov, Viktor A., 4,297,946, Cl. 102-307.000.
Kovalenko, Vladimir V.: *See—*
Batalin, Oleg E.; Dykman, Arkady S.; Osadchenko, Alexandr I.; Balkhanova, Galina F.; Belgorodsky, Izrail M., Nevstruev, Vladimir I.; Radionov, Valery A.; Tulchinsky, Eduard A.; Belyaev, Valentin M.; Smolin, Jury I.; Breiman, Mark I.; Orlyansky, Vitaly V.; Zhirnov, Nikolai Y.; Galibin, Nikolai V.; Troitsky, Adrian P.; and Kovalenko, Vladimir V., 4,298,503, Cl. 252-432.000.
Kovaleski, Joseph J., to Wyrepak Industries, Inc. Wire take-off device. 4,298,174, Cl. 242-128.000.
Koyanagi, Haruo: *See—*
Takaki, Masaoki; Sawano, Hirokazu; Yamanaka, Kunio; Asada, Kazuyoshi; Hideshima, Keiji; and Koyanagi, Haruo, 4,298,958, Cl. 364-900.000.
Krabbe, Wilfried, to Philipp Holzmann Aktiengesellschaft. Tunnelling apparatus. 4,298,230, Cl. 299-33.000.
Krabetz, Richard: *See—*
Engelbach, Heinz; Krabetz, Richard; Duembgen, Gerd; Willersinn, Carl-Heinz; and Beitelschmidt, Walter, 4,298,763, Cl. 568-479.000.
Kraftwerk Union Aktiengesellschaft: *See—*
Hensolt, Theodor, 4,298,432, Cl. 376-365.000.
Kramer, Charles F.: *See—*
Kaufmann, Frank H.; and Kramer, Charles F., 4,298,032, Cl. 139-207.000.
Kramer, Petrus A.: *See—*
Verbrugge, Pieter A.; and Kramer, Petrus A., 4,298,756, Cl. 560-231.000.
Kratel, Gunter; Katzer, Hans; Loskot, Stephan; Lang, Wilfried; and Weis, Klaus, to Consortium fur Elektrochemische Industrie GmbH. Agglomerated mixtures of highly dispersed metal oxides and opacifiers. 4,298,387, Cl. 501-92.000.
Krauth, Axel; Maier, Horst R.; Pohlmann, Hans-Juergen; Foerster, Siegfried; and Kleeman, Manfred, to Rosenthal Technik AG; and Kernforschungsanlage Juelich GmbH. Heat exchanger and process for its manufacture. 4,298,059, Cl. 165-166.000.
Kray, William D., to General Electric Company. Aqueous silicone resin coating composition and solid substrate coated therewith. 4,298,655, Cl. 428-412.000.
Krenzer, Eberhard: *See—*
Bauer, Karl; and Krenzer, Eberhard, 4,297,837, Cl. 57-350.000.
Krenzer, Paul; Peters, Franz-Josef; Schlusnus, Karl-Heinz; and Wahl, Hans J., to Hoesch Werke Aktiengesellschaft. Method and device for automatically tracking systems to the center of weld gaps, weld joints and weld reinforcements. 4,298,785, Cl. 219-124.340.
Kreutz, Peter: *See—*
Keller, Egon; and Kreutz, Peter, 4,298,359, Cl. 55-269.000.
Krieg, Rudolf, to Patent-Treuhand-Gesellschaft fur elektrische Gluhlampen mbH. Photoflash reflector configuration. 4,298,909, Cl. 362-18.000.
Krieger, Aaron J.; and Elsie, Lawrence E. Automated liquid container filling apparatus. 4,297,828, Cl. 53-282.000.
Krogsrud, Jens C.; and Soerensen, Kai O., to Jac. Jacobsen A/S. Lamp. 4,298,921, Cl. 362-346.000.
Krug, Herbert: *See—*
Dockner, Toni; Kempe, Uwe; Krug, Herbert; Magnussen, Peter; Praetorius, Werner; and Szymanski, Hans J., 4,298,748, Cl. 548-347.000.
Krull, Walther; Bekaan, Alfred; and Schiller, Wolf-Dieter, to Beth GmbH. Filter cleaning device. 4,298,362, Cl. 55-304.000.
Kubo, Kazuhiko; Takahashi, Akira; and Oohashi, Kenichi, to Kabushiki Kaisha Osaka Packing Seizosho. Calcium silicate and process for producing same. 4,298,386, Cl. 501-80.000.
Kubotera, Kikuo; Mizuki, Eiichi; Satomura, Masato; Iwano, Haruhiko; and Fujiwara, Tadahiro, to Fuji Photo Film Co., Ltd. Lithographic type diffusion transfer developing composition. 4,298,673, Cl. 430-204.000.
Kucza, Jean-Claude; Mastrot, Albert; Perrot, Rene; and Wattier, Jean-Mary, to Cegedur Societe de Transformation de l'Aluminium Pechiney. Method for the production of a composite hollow body. 4,297,777, Cl. 29-420.000.
Kudinov, Vladimir M.: *See—*
Paton, Boris E.; Kudinov, Vladimir M.; Volgin, Leonid A.; Petushkov, Vladimir G.; Bushtedt, Jury P.; Koroteev, Anatoly Y.; and Kotov, Viktor A., 4,297,946, Cl. 102-307.000.
Kudo, Mitsuhiro; Otomo, Shigekazu; Ogihara, Hirotomo; and Aoki, Yoshio, to Hitachi Denshi Kabushiki Kaisha. Abrasion-resistive high permeability magnetic alloy. 4,298,381, Cl. 75-124.000.
Kuehnle, Manfred R. Mechanical power transmission method and means. 4,297,919, Cl. 74-750.00R.
Kuhn, Karl-Dieter; and Koch, Karl-Heinz, to Alkem GmbH. Method of producing PuO_2 by calcination of Pu oxalate produced by discontinuous precipitation from solutions contaminated with americium. 4,298,579, Cl. 423-11.000.
Kuhnle, Ernst; and Schwarz, Josef, to Bizerba-Werke Wilhelm Kraut KG. Apparatus for introducing a force to be measured into a bending rod. 4,297,875, Cl. 73-862.620.
Kuipers, Jack, to Austin Company, The. Method and apparatus for tracking objects. 4,298,874, Cl. 343-112.00R.
Kukuminato, Tetsuo, to Shoketsu Kinzoku Kogyo Kabushiki Kaisha. Pipe joint. 4,298,220, Cl. 285-178.000.
Kulkens, John F.: *See—*
Ishihara, Theodore M.; and Kulkens, John F., 4,298,815, Cl. 313-325.000.
Kulprathipanja, Santi, to UOP Inc. Technique to reduce the zeolite molecular sieve solubility in an aqueous system. 4,298,501, Cl. 252-430.000.
Kumazawa, Eitaro: *See—*
Saiki, Yukihiro; Kumazawa, Eitaro; and Ishioka, Yozo, 4,297,793, Cl. 34-56.000.
Kume, Kazunari: *See—*
Watanabe, Minoru; Kume, Kazunari; Ohno, Hideshi; and Tamaru, Munetaka, 4,297,838, Cl. 368-76.000.
Kummel, Louis: *See—*
Bauer, Erwin; Davids, Ralf; Gotz, Gerhard; Jussen, Hilmar; Arndt, Heinrich; Kummel, Louis; Morhart, Rudolf; and Pollak-Banda, Erich, 4,297,917, Cl. 74-665.00G.
Kunzig, Herbert, to Licentia Patent-Verwaltungs-G.m.b.H. Process for activating plastic surfaces for metallization thereof by treatment with a complex forming solution. 4,298,636, Cl. 427-304.000.
Kurakami, Osamu: *See—*
Mitake, Kenjiro; and Kurakami, Osamu, 4,298,960, Cl. 365-210.000.
Kureha Kagaku Kogyo Kabushiki Kaisha: *See—*
Mizuno, Toshiya; Ohta, Mitsuru; and Segawa, Masahiro, 4,298,719, Cl. 526-255.000.
Ohya, Masaki; Kobayashi, Akio; Ogiwara, Takeo; and Satake, Yoshikatsu, 4,298,710, Cl. 525-5.000.
Kuroda, Naoki, to Warner & Swasey Company, The. Sheet metal positioning and gripping apparatus and method. 4,297,927, Cl. 83-36.000.
Kurose, Hideo, to Jelmax Co., Ltd. Feeding device for printed circuit board and feeding element. 4,298,848, Cl. 333-181.000.
Kurth, Herman W.: *See—*
Raffelsiefer, Kurt; Kurth, Herman W.; and Haberle, Fritz, 4,298,223, Cl. 292-216.000.
Kwon, Young D.: *See—*
Prevorsek, Dusan C.; and Kwon, Young D., 4,297,878, Cl. 73-146.000.
Kylberg, Nadia M. Device for brassieres. 4,298,008, Cl. 128-477.000.
Kyowa Hakko Kogyo Co., Ltd.: *See—*
Iida, Takao; Shirahata, Kunikatsu; Ishii, Shinzo; Okachi, Ryo; and Nara, Takashi, 4,298,690, Cl. 435-80.000.
Kyster, Erik, to Danfoss A/S. Metering type hydrostatic steering unit with planetary gearing type input and feedback means. 4,297,845, Cl. 60-384.000.
Kyte, Derek J.; Hansen, Walter I.; and Craig, Roderick I., to Eltra Corporation. Character generating method and apparatus. 4,298,945, Cl. 364-523.000.
L.B. (Plastics) Limited: *See—*
Litchfield, Leon G.; and Hardy, Terence, 4,298,234, Cl. 308-3.600.
La Calhene: *See—*
Francois, Daniel; and Glachet, Charles, 4,298,300, Cl. 414-2.000.
Lagana', Vincenzo; and Pasero, Riccardo, to Snamprogetti S.p.A. Apparatus for dispensing film-like liquid into vertical pipes. 4,298,041, Cl. 141-392.000.
Lagendijk, Andre: *See—*
Schumacher, John C.; and Lagendijk, Andre, 4,298,037, Cl. 141-1.000.
Lai, John T.; and Son, Pyong-Nae, to B. F. Goodrich Company, The. Piperdinyl substituted 1,4-diaza-2-cycloalkanones and derivatives thereof. 4,298,737, Cl. 544-360.000.
Lai, Stephen; and Srivastava, Gopal K., to Zenith Radio Corporation. Digital vertical synchronization system for a television receiver. 4,298,890, Cl. 358-158.000.
L'Air Liquide, Societe Anonyme pour l'Etude et l'Exploitation des Procedes Georges Claude: *See—*
Malafosse, Jean; Girou, Andre; Olivier, Herve; and Dupont, Michel, 4,298,585, Cl. 423-279.000.
Lakra, Paul, to Lucas Industries Limited. Fuel injection pumping apparatus. 4,297,982, Cl. 123-502.000.
Lama, William L.: *See—*
Rees, James D.; Altfather, Kenneth W., Jr.; Lama, William L.; and Ozero, Donna U., 4,298,274, Cl. 355-71.000.
Lamb, Charles M., III, to Phillips Petroleum Company. Polymer curing system, air-curable composition and method of preparing the composition. 4,298,508, Cl. 260-18.00R.
Lance, Bruce J. Locking wrench tool with auxiliary mechanical output. 4,297,756, Cl. 7-127.000
Land, Edwin H.; Cerankowski, Leon D.; and Mattucci, Neil, to Polaroid Corporation. Color transfer film and process. 4,298,674, Cl. 430-213.000.
Landa, Torstein: *See—*
Kinnander, Bo; Landa, Torstein; and Mansson, Ragnar, 4,298,433, Cl. 376-286.000.

Lane, Perry M.: *See—*
Stephens, Leonard W., 4,297,924, Cl. 81-59.100.
Lang, Wilfried: *See—*
Kratel, Gunter; Katzer, Hans; Loskot, Stephan; Lang, Wilfried; and Weis, Klaus, 4,298,387, Cl. 501-92.000.
Langdon, C. Ray; and Burkart, Alan R., to Cabot Berylco Inc. Aluminum-titanium-boron master alloy. 4,298,408, Cl. 148-32.000.
Lange, Burkhart; Agarwal, Suresh C.; Fringeli, Werner; and Gunter, Franz, to Ciba-Geigy Corporation. Process for the production of washing powders of stabilized or enhanced appearance which contain fluorescent whitening agents. 4,298,490, Cl. 252-91.000.
Lange, Ronald E.; and Koegel, Robert J., to Honeywell Information Systems Inc. Interface circuit for coupling an automated maintenance system to a CPU. 4,298,935, Cl. 364-200.000.
Langren, Robert J., to Warner-Lambert Company. Patient transfer device. 4,297,753, Cl. 5-81.00C.
Lanham, William E., Jr.: *See—*
Gurney, Gerald W.; and Lanham, William E., Jr., 4,297,840, Cl. 59-85.000.
Lapp, Roger H., to United States of America, Navy. Pivotal support with independent adjusting elements and locking means. 4,298,248, Cl. 350-310.000.
Lapper, Mark L. L.: *See—*
Coxon, Andrew G.; Edge, David J.; and Lapper, Mark L. L., 4,298,491, Cl. 252-95.000.
Laroche, Robert N., to Artopex Inc. Safety lock system for vertically stacked storage elements. 4,298,236, Cl. 312-215.000.
Larsen, Richard R.: *See—*
LaRue, Maureen L.; and Larsen, Richard R., 4,297,992, Cl. 128-77.000.
LaRue, Maureen L.; and Larsen, Richard R. Distal joint finger splint. 4,297,992, Cl. 128-77.000.
Lastinger, Anthony W.: *See—*
Whitfield, Carroll J.; and Lastinger, Anthony W., 4,298,071, Cl. 172-624.000.
Latapie, Jean M.; and Pizzolitto, Georges. Method of forming three dimensional relief maps. 4,298,414, Cl. 156-59.000.
Latty, Cyril X. Method for manufacturing sealing rings. 4,298,562, Cl. 264-103.000.
Laude, Jean-Pierre, to Instruments S.A. Dye lasers. 4,298,845, Cl. 331-94.50C.
Launay, Dominique. Unidirectional speaker enclosure. 4,298,087, Cl. 181-153.000.
Laurent, Roger, to Pomagalski S.A. Detachable grip for coupling a carriage. 4,297,951, Cl. 104-209.000.
Laurich-Trost, Victor R. Cage assembly for press assembly. 4,297,943, Cl. 100-129.000.
Laurie, Gordon H.: *See—*
Sakauye, Randall T.; Marlow, John V.; Laurie, Gordon H.; and Seymour, Theodore J., 4,297,866, Cl. 72-186.000.
Lautenschlager, Reinhard, to Karl Lautenschlager KG. Furniture hinge. 4,297,763, Cl. 16-164.000.
Law, Gabriel H.; and Gysegem, Albert P., to Ameron, Inc. Siloxane-tin coatings. 4,298,543, Cl. 260-429.700.
Lawler, John A.: *See—*
Birch, Stanley F.; Lawler, John A.; and Paynter, Gerald C., 4,298,089, Cl. 181-213.000.
Lawrence, James D., to Dailey Oil Tool, Inc. Method of inhibiting sticking of well string. 4,298,078, Cl. 175-72.000.
Laws, Derek R. J.; Bath, Nigel A.; Ennis, Colin S.; Pickett, John A.; and Wheldon, Alfred G., to Brewing Patents Limited. Production of an iso-α-acid preparation from hops. 4,298,626, Cl. 426-600.000.
Lawson, Christopher J.: *See—*
Williams, Alan G.; Lawson, Christopher J.; and Wimpenny, Julian W. T., 4,298,725, Cl. 536-1.000.
Lawson, John E., to Armco Inc. Remotely operated coupling and well devices employing same. 4,298,064, Cl. 166-75.00A.
Lawson, John E., to Armco Inc. Method and apparatus for installing multiple pipe strings in underwater wells. 4,298,067, Cl. 166-315.000.
Lebanon Steel Foundry: *See—*
Vogel, Edward G.; and Westlund, Rodney C., 4,298,554, Cl. 264-25.000.
Lebesnerais, Gerard: *See—*
Nuez, Jean-Paul; and Lebesnerais, Gerard, 4,298,401, Cl. 148-1.500.
LeBlanc, Joseph R.; and Peterson, Robert B., to M. W. Kellogg Company, The. Split axial flow converter in ammonia synthesis. 4,298,589, Cl. 423-359.000.
LeBlanc, Ralph W.; and Bingham, Robert M. Manifolding system for oil purifiers. 4,298,469, Cl. 210-168.000.
Lechner, Bartl: *See—*
Herchenbach, Horst; and Lechner, Bartl, 4,298,340, Cl. 432-58.000.
Lechtken, Peter; Buethe, Ingolf; Jacobi, Manfred; and Trimborn, Werner, to BASF Aktiengesellschaft. Acylphosphine oxide compounds their preparation and use. 4,298,738, Cl. 546-22.000.
Ledford, Charles D., to Baltimore Spice Company, The. Liquid smoke and its production. 4,298,435, Cl. 201-8.000.
Lee, Gim F., Jr., to General Electric Company. Flame retardant thermoplastic polyphenylene ether resin compositions. 4,298,514, Cl. 260-29.1SB.
Lee, Henry E., to United States of America, Air Force. Nonlinear amplitude detector. 4,298,942, Cl. 364-483.000.
Lee, Len F.: *See—*
Howe, Robert K.; and Lee, Len F., 4,298,375, Cl. 71-90.000.
Lee, Shy-Fuh, to Zoecon Corporation. Process for preparing 1-aminocyclopropane-1-carboxylic acid. 4,298,760, Cl. 562-506.000.
Leeming, Peter A.; Mitakidis, Dimitrios; and Woodrow, Peter F., to BPB Industries Limited. Organic gypsum set accelerators. 4,298,394, Cl. 106-111.000.
Leger, Violeta Z.: *See—*
Evans, William P.; and Leger, Violeta Z., 4,298,665, Cl. 429-197.000.
Lehrer, Joseph E. Forced air fireplace heating system. 4,297,986, Cl. 126-121.000.
Leifeld, Ferdinand, to Trutzschler GmbH & Co. KG. Apparatus for opening textile fiber bales. 4,297,767, Cl. 19-80.00R.
LeLandais, Jacques R. A.: *See—*
Halin, Yves R.; and LeLandais, Jacques R. A., 4,297,844, Cl. 60-226.00A.
Le Mair, Willem: *See—*
Melis, Johannes H. A. M.; and Le Mair, Willem, 4,298,793, Cl. 235-487.000.
Lemercier, Guy: *See—*
Depierre, Yves; Figuet, Jacques A.; and Lemercier, Guy, 4,298,431, Cl. 176-290.000.
Leon, Roque O. L. Flexible marking composition for pencils. 4,298,507, Cl. 260-4.0AR.
Leong, Henry. Luggage handle having releasable locking assembly. 4,298,104, Cl. 190-48.000.
Lepone, Gerald E., to Du Pont de Nemours, E. I., and Company. Agricultural heterocyclic sulfenamides. 4,298,613, Cl. 424-274.000.
Lerch, Adolph F.: *See—*
Tomassetti, Jerome, Jr.; and Lerch, Adolph F., 4,297,814, Cl. 52-81.000.
Lesher, George Y.; and Dickinson, William B., to Sterling Drug Inc. 4,5-Dihydro-6-(4-pyridinyl)-3-pyridazinol and salts, their preparation and use as blood pressure lowering agents. 4,298,609, Cl. 424-250.000.
Lessard, Kenneth R., to Econ Scrap Shear Co. Double ended metal cleaning shear. 4,297,931, Cl. 83-397.000.
Leveque, Jean-Luc; Rasseneur, Laurent; de Rigal, Jean P.; and Gras, Gilbert, to L'Oreal. Method of and apparatus for the measurement of at least one mechanical property of an elastic material. 4,297,884, Cl. 73-579.000.
Lever Brothers Company: *See—*
Coxon, Andrew C.; Edge, David J.; and Lapper, Mark L. L., 4,298,491, Cl. 252-95.000.
Parslow, Michael W.; and Sime, Stuart J., 4,298,494, Cl. 252-174.160.
van den Brom, Guido C., 4,298,492, Cl. 252-97.000.
Levin, Gideon; and Vofsi, David, to Yeda Research & Development Co. Ltd. Modified polyvinylchloride. 4,298,714, Cl. 525-330.000.
Levin, Robert E.: *See—*
English, George J.; Levin, Robert E.; and Fohl, Timothy, 4,298,908, Cl. 362-14.000.
Levy, Norman S.: *See—*
Schachar, Ronald A.; and Levy, Norman S., 4,298,004, Cl. 128-305.000.
Lewalter, Jurgen; Rottmaier, Ludwig; Merten, Rudolf; Zecher, Wilfried; Dunwald, Willi; and Schulte, Bernhard, to Bayer Aktiengesellschaft. Process for the preparation of polymers containing hydantoin groups. 4,298,515, Cl. 260-30.40N.
Lewandowski, Stanislaw J.: *See—*
Bielska-Lewandowska, Halina; Irisova, Natalija; Jung, Grzegorz; Lewandowski, Stanislaw J.; Prohorov, Aleksandr; Sobolewski, Roman; and Vinogradov, Eugenij, 4,298,990, Cl. 455-325.000.
Lewis, Herman L., Jr. System for reusing paint cans. 4,298,134, Cl. 220-307.000.
Leybold-Heraeus GmbH: *See—*
Pohan, Kurt, 4,298,040, Cl. 141-115.000.
Leyde, Warren: *See—*
Maxey, Carl W.; and Leyde, Warren, 4,298,286, Cl. 356-381.000.
Leyse, Robert H.: *See—*
Rolstad, Erik; Korpas, Thor-Harrald; Leyse, Robert H.; and Smith, Robert D., 4,298,430, Cl. 376-247.000.
Libbey-Owens-Ford Company: *See—*
Schave, Richard D., 4,298,281, Cl. 356-138.000.
Stover, K. Lawrence; Bueno, Alejandro G.; Miller, James W.; and Shamp, Donald E., 4,298,372, Cl. 65-136.000.
Liberman, Richard. Valve indicator post. 4,297,966, Cl. 116-277.000.
Licari, Vito. Portable drying rack. 4,297,795, Cl. 34-239.000.
Licentia Patent-Verwaltung-G.m.b.H.: *See—*
Kassel, Karl-Heinz; Lutz, Manfred; Stuke, Josef; and Walsdorfer, Hubert, 4,298,671, Cl. 430-128.000.
Licentia Patent-Verwaltungs-G.m.b.H.: *See—*
Kunzig, Herbert, 4,298,636, Cl. 427-304.000.
Liebermann, Howard H.; Frischmann, Peter G.; and Rosenberry, George M., Jr., to General Electric Company. Helical metallic ribbon for continuous edge winding applications. 4,298,659, Cl. 428-592.000.
Ligurchim S.r.l.: *See—*
Calcagno, Giancarlo, 4,298,524, Cl. 260-239.0BF.
Lillig, John E.; and Meyer, Richard C., to Beckman Instruments, Inc. Tray section for automated sample handling apparatus. 4,298,570, Cl. 422-64.000.
Lilly, James R., to Burlington Industries, Inc. Guard for yarn texturing machine. 4,297,836, Cl. 57-291.000.
Lim, Franklin: *See—*
Sodickson, Lester A.; and Lim, Franklin, 4,298,345, Cl. 23-230.00R.
Limoochik, Abe; and Richardson, Neil G., to Domtar Inc. Pitch compositions. 4,298,396, Cl. 106-273.00R.
Lin, Shong D. Assembled fuse lampholder of light set. 4,298,923, Cl. 362-392.000.

Lin, Wayne H. T.; Grib, James J.; and Mosier, Larry D., to Mallinckrodt, Inc. Double antibody separation method. 4,298,592, Cl. 424-1.000.
Lindmayer, Joseph, to Semix Incorporated. Method of purifying silicon. 4,298,423, Cl. 156-616.00R.
Lindner, Tassilo: *See—*
Schinabeck, Anton; Zeller, Norbert; Lindner, Tassilo; Engelsberger, Georg; and Riedle, Rudolf, 4,298,753, Cl. 556-415.000.
Lindre, Jaan: *See—*
Robins, Ronald F.; and Lindre, Jaan, 4,298,857, Cl. 340-52.00A.
Lindsey, Richard V., Jr.; and Prichard, William W., to Du Pont de Nemours, E. I., and Company. Oxidation of butadiene to furan. 4,298,531, Cl. 260-346.110.
Lindstrom, Richard R.: *See—*
Dobyns, Thomas R.; Lindstrom, Richard R.; and Ridings, Robert P., 4,298,979, Cl. 370-104.000.
Ling, Chung-Mei, to Abbott Laboratories. Reagents and methods utilizing labeled Fab bound to antigens. 4,298,593, Cl. 424-1.000.
Ling-Huang, Ling: *See—*
Huang, Thomas L.; and Ling-Huang, Ling, 4,298,198, Cl. 273-1.0GC.
Linnau, Yendra: *See—*
Schwarz, Otto; Linnau, Yendra; Loblich, Franz; and Seelich, Thomas, 4,298,598, Cl. 424-101.000.
Liqui-Box Corporation: *See—*
Schieser, Warren J.; and Vickers, Stanley E., 4,297,929, Cl. 83-110.000.
Litchfield, Leon G.; and Hardy, Terence, to L.B. (Plastics) Limited. Drawers and drawer components. 4,298,234, Cl. 308-3.600.
Little Giant Industries, Inc.: *See—*
Wing, Harold R., 4,298,093, Cl. 182-153.000.
Ljubimova, Nina A.: *See—*
Bochkarev, Ellin P.; Prokopov, Igor V.; Eljutin, Alexandr V.; Belsky, Arkady A.; Baryshnikova, Svetlana M.; Nasyrov, Nail Z.; Novikov, Nikolai A.; Khairulin, Edige R.; Zvyagin, Mikhail S.; Abrjutin, Vladimir N.; Konstantinova, Ljubov L; Ljubimova, Nina A.; and Gorbacheva, Nadezhda S., 4,298,380, Cl. 75-101.0BE.
LKB Clinicon Aktiebolag: *See—*
Berglund, Erling, 4,298,575, Cl. 73-864.130.
Loblich, Franz: *See—*
Schwarz, Otto; Linnau, Yendra; Loblich, Franz; and Seelich, Thomas, 4,298,598, Cl. 424-101.000.
Loev, Bernard: *See—*
Brown, Richard E.; St. Georgiev, Vasil; and Loev, Bernard, 4,298,742, Cl. 548-152.000.
Loffler, Walter, to Hollingsworth GmbH. Carding plate. 4,297,768, Cl. 19-113.000.
Lohr, David: *See—*
Wang, Cheng L.; Soodak, Charles; and Lohr, David, 4,298,938, Cl. 364-413.000.
Long, Alvin L. Electric firing device. 4,298,914, Cl. 362-112.000.
Longyear Company: *See—*
Anderson, Ronald B.; Caneer, Clifford, Jr.; and Maki, Terrance C., 4,297,771, Cl. 24-263.0DA.
Loos, Evelyn J., to Weir, Stanley M. Garbage disposal utensil. 4,297,761, Cl. 15-105.000.
Lord, Henry A.: *See—*
Reifers, Richard F.; and Lord, Henry A., 4,298,156, Cl. 229-2.50R.
L'Oreal: *See—*
Leveque, Jean-Luc; Rasseneur, Laurent; de Rigal, Jean P.; and Gras, Gilbert, 4,297,884, Cl. 73-579.000.
Losee, Paul D.: *See—*
Argumedo, Armando J.; Brock, George W.; and Losee, Paul D., 4,298,899, Cl. 360-122.000.
Loskot, Stephan: *See—*
Kratel, Gunter; Katzer, Hans; Loskot, Stephan; Lang, Wilfried; and Weis, Klaus, 4,298,387, Cl. 501-92.000.
Lotteau, Jacques; Bruker, Jacques; and Freche, Charles. Device allowing a safety connection between the pedal of a bicycle and the shoe worn by the cyclist. 4,298,210, Cl. 280-259.000.
Lovell, Roger. Corrosion protection method. 4,298,635, Cl. 427-247.000.
Lozano, Raymond L.: *See—*
Yan, Tsoung-yuan; and Lozano, Raymond L., 4,298,578, Cl. 423-7.000.
Lozar, Michael J. Illuminating apparatus. 4,298,913, Cl. 362-103.000.
Lu, Chen-i, to Eastman Kodak Company. Phosphorescent screens. 4,298,650, Cl. 428-306.000.
Lu, Chin H., to Xerox Corporation. Toners containing alkyl pyridinium compounds and their hydrates. 4,298,672, Cl. 430-108.000.
Lucas Industries Limited: *See—*
Knowles, Richard P., 4,297,785, Cl. 29-611.000.
Lakra, Paul, 4,297,982, Cl. 123-502.000.
Luck, Wolfhard: *See—*
Knopf, Herbert; Spahrkas, Heinrich; and Luck, Wolfhard, 4,298,344, Cl. 8-94.260.
Ludwig, Christian. Interchangeable lens for cameras, such as reflex cameras. 4,298,266, Cl. 354-286.000.
LuK Lamellen und Kupplungsbau GmbH: *See—*
Geschka, Hugo-Werner; and Beitecke, Bernd, 4,297,859, Cl. 68-13.00R.
Luthi, Oscar, to Ingersoll-Rand Company. Paper sheet dryer. 4,297,794, Cl. 34-122.000.
Lutz, Manfred: *See—*
Kassel, Karl-Heinz; Lutz, Manfred; Stuke, Josef; and Walsdorfer, Hubert, 4,298,671, Cl. 430-128.000.
Lutz, Rainer M. Toilet and cover. 4,297,750, Cl. 4-247.000.
Luz, David W., to RCA Corporation. Power supply and deflection circuit with raster size compensation. 4,298,829, Cl. 315-408.000.
M. W. Kellogg Company, The: *See—*
LeBlanc, Joseph R.; and Peterson, Robert B., 4,298,589, Cl. 423-359.000.
Maag- Zahnrader & Maschinen AG: *See—*
Sterki, Armin; and Sommer, Gerd R., 4,297,788, Cl. 33-179.50R.
Maaghul, John, to PPG Industries, Inc. Method for producing an improved bundle of a plurality of fiber glass strands. 4,298,653, Cl. 428-378.000.
Mac Valves, Inc.: *See—*
Neff, James A., 4,298,027, Cl. 137-625.650.
Macharashvili, Petr G.: *See—*
Barbakadze, Dzhondo F.; Mindeli, Mamuka S.; Macharashvili, Petr G.; Rusidze, Vazha V.; and Suladze, Otari N., 4,298,192, Cl. 266-218.000.
Machon, Jean-Pierre, to Societe Chimique des Charbonnages-CdF Chimie. Ethylene polymerization process. 4,298,717, Cl. 526-124.000.
Machonis, John, Jr.; Schmukler, Seymour; Zeitlin, Robert J.; and Shida, Mitsuzo, to Chemplex Company. Adhesive blends of elastomer, polyolefin, and graft of polyethylene with unsaturated fused ring anhydrides. 4,298,712, Cl. 525-74.000.
MacKay, Patrick W., to Fierro Esponja, S.A. Apparatus for gaseous reduction of metal ores with cooling loop. 4,298,190, Cl. 266-156.000.
MacKenzie, Michael C.; and Fischer, Reinhold S., to Purex Corporation. Damaged vane locating method and apparatus. 4,298,312, Cl. 415-118.000.
MacLennan, Jean. Hair processing shield. 4,298,014, Cl. 132-9.000.
Mada, Mitsuo: *See—*
Mutai, Masahiko; Mada, Mitsuo; and Shimada, Kiyohiro, 4,298,619, Cl. 426-43.000.
Maes, Roland. Process for the determination of compounds showing among themselves specific binding affinities by the use of a solid phase. 4,298,687, Cl. 435-7.000.
Magnetic Peripherals Inc.: *See—*
Hennenfent, Douglas J.; Johnson, Robert A.; and Holmstrand, Allan L., 4,297,781, Cl. 29-467.000.
Magnussen, Peter: *See—*
Dockner, Toni; Kempe, Uwe; Krug, Herbert; Magnussen, Peter; Praetorius, Werner; and Szymanski, Hans J., 4,298,748, Cl. 548-347.000.
Magyar Aluminiumipari Troszt: *See—*
Nagy, Ferenc; Szabo, Ferenc; and Szucs, Zoltan F., 4,297,892, Cl. 73-826.000.
Mahnke, Earl A.; and Zoller, Christopher J., to Ericson Manufacturing Company, The. Power line fault detector circuit. 4,298,864, Cl. 340-657.000.
Maier, Alfred E.; Shimp, Alan B.; and Uram, David J., to Westinghouse Electric Corp. Circuit breaker with interchangeable rating adjuster and interlock means. 4,298,852, Cl. 335-6.000.
Maier, Horst R.: *See—*
Krauth, Axel; Maier, Horst R.; Pihlmann, Hans-Juergen; Foerster, Siegfried; and Kleeman, Manfred, 4,298,059, Cl. 165-166.000.
Majewicz, Thomas G.; and Ropp, Walter S., to Hercules Incorporated. Method of preparing hydroxyethyl ethers of cellulose. 4,298,728, Cl. 536-96.000.
Maki, Terrance C.: *See—*
Anderson, Ronald B.; Caneer, Clifford, Jr.; and Maki, Terrance C., 4,297,771, Cl. 24-263.0DA.
Makino, Takehisa: *See—*
Narita, Kiichi; Mori, Takasuke; Ayata, Kenzo; and Makino, Takehisa, 4,298,376, Cl. 75-49.000.
Makosch, Geunter; and Solf, Bernhard, to International Business Machines Corporation. Interferometric measuring method. 4,298,283, Cl. 356-351.000.
Makrides, Alkis C., to EIC Corporation. Removing carbon oxysulfide from gas streams. 4,298,584, Cl. 423-242.000.
Malafosse, Jean; Girou, Andre; Olivier, Herve; and Dupont, Michel, to L'Air Liquide, Societe Anonyme pour l'Etude et l'Exploitation des Procedes Georges Claude. Process of making sodium perborate. 4,298,585, Cl. 423-279.000.
Mallinckrodt, Inc.: *See—*
Lin, Wayne H. T.; Grib, James J.; and Mosier, Larry D., 4,298,592, Cl. 424-1.000.
Malone, Patrick C.: *See—*
Dick, Calvin; and Malone, Patrick C., 4,297,752, Cl. 5-52.000.
Mancini, Derek V.; and Wright, William J., to Consumers Glass Company Limited. Automatic container feed for container handling device. 4,298,137, Cl. 221-11.000.
Mangurten, Henry H.; and Vanek, Chester F. Blood sample collector. 4,298,011, Cl. 128-763.000.
Mansson, Ragnar: *See—*
Kinnander, Bo; Landa, Torstein; and Mansson, Ragnar, 4,298,433, Cl. 376-286.000.
Marchese, Vincent P.: *See—*
Corrado, Anthony P.; and Marchese, Vincent P., 4,298,181, Cl. 251-129.000.
Marciniec, Edmund T., to Extel Corp. Thin film thermal print head. 4,298,786, Cl. 219-216.000.
Marechal, Robert, to Societe Anonyme SICMA - Societe Industrielle; and Commerciale de Materiel Aeronautique. Control devices for use with a sheathed wire or cable. 4,297,912, Cl. 74-501.00R.

Marlo Company, Inc., The: *See—*
Hopper, Chester S.; and Case, Edward M., 4,298,207, Cl. 277-230.000.
Marlow, John V.: *See—*
Sakauye, Randall T.; Marlow, John V.; Laurie, Gordon H.; and Seymour, Theodore J., 4,297,866, Cl. 72-186.000.
Marmon Company: *See—*
Schrecongost, Ray B., 4,297,935, Cl. 84-1.010.
Marshall and Williams Company: *See—*
Wyman, Floyd H., 4,298,473, Cl. 210-213.000.
Marston Excelsior Limited: *See—*
Warne, Michael A., 4,298,445, Cl. 204-196.000.
Maruscak, John: *See—*
Jackson, Ronald A.; and Maruscak, John, 4,298,095, Cl. 182-184.000.
Marushima, Giichi; Tanaka, Hiroshi; Tosaka, Umi; Takahashi, Shinkichi; and Komiyu, Takao, to Canon Kabushiki Kaisha. Electrophotographic process and apparatus. 4,298,669, Cl. 430-55.000.
Marx, Thomas O., to Atwood Vacuum Machine Company. Gas spring with improved terminal connector and mounting means. 4,298,194, Cl. 267-64.110.
Masaki, Masaru; Ito, Yoshinori; Inoue, Akihiko; and Toda, Munetaka, to Toyota Jidosha Kogyo Kabushiki Kaisha. Pipe end expanding or contracting process utilizing ironing. 4,297,867, Cl. 72-347.000.
Mashima, Kazuto: *See—*
Nagata, Toshiyuki; Terashima, Masahiko; and Mashima, Kazuto, 4,298,628, Cl. 426-656.000.
Massachusetts Institute of Technology: *See—*
Fernstrom, John D.; and Sved, Alan F., 4,298,611, Cl. 424-261.000.
Harney, Robert C., 4,298,280, Cl. 356-5.000.
Monroe, Scott C., 4,298,953, Cl. 364-825.000.
Mastrot, Albert: *See—*
Kucza, Jean-Claude; Mastrot, Albert; Perrot, Rene; and Wattier, Jean-Mary, 4,297,777, Cl. 29-420.000.
Masugi, Takashi: *See—*
Ueda, Ikuo; Takaya, Takao; Kobayashi, Masakazu; Masugi, Takashi; Takasugi, Hisashi; Kochi, Hiromu; and Kitaguchi, Tadashi, 4,298,529, Cl. 260-340.90R.
Masuzawa, Sigeaki; Saiji, Mituhiro; and Tanimoto, Akira, to Sharp Kabushiki Kaisha. Display device for electronic calculator or the like. 4,298,865, Cl. 340-706.000.
Mather & Platt Limited: *See—*
Bray, Geddes A., 4,298,068, Cl. 169-39.000.
Matsuda, Motonobu; Matsui, Tohru; and Tanaka, Yoshihiro, to Minolta Camera Kabushiki Kaisha. Distance measuring device. 4,298,258, Cl. 354-25.000.
Matsui, Katsuhiko, to Nissan Motor Company, Limited. Idling rotational speed control system for a diesel engine. 4,297,978, Cl. 123-339.000.
Matsui, Tohru: *See—*
Matsuda, Motonobu; Matsui, Tohru; and Tanaka, Yoshihiro, 4,298,258, Cl. 354-25.000.
Matsunaga, Isao: *See—*
Oi, Nobuhiro; Aoki, Bunya; Shinozaki, Teizo; Moro, Kanji; Matsunaga, Isao; Noto, Takao; Nebashi, Toshiyuki; Harada, Yusuke; Endo, Hisao; Kimura, Takao; Okazaki, Hiroshi; Ogawa, Haruki; and Shindo, Minoru, 4,298,605, Cl. 424-246.000.
Matsuo, Takehiko: *See—*
Murai, Keiichi; and Matsuo, Takehiko, 4,298,670, Cl. 430-67.000.
Matsushita Electric Industrial Co., Ltd.: *See—*
Baba, Takaaki; Sagishima, Takayuki; Kitani, Teruo; and Sasaki, Reiichi, 4,298,891, Cl. 358-183.000.
Matsuura, Shizuya; and Konishi, Fumiya, 4,298,803, Cl. 250-492.200.
Matsushita Electric Works, Ltd.: *See—*
Mihara, Haruhiko, 4,298,779, Cl. 200-335.000.
Matsushita Electronics Corporation: *See—*
Fukuda, Makoto, 4,298,822, Cl. 313-493.000.
Matsushita, Yoshihiro: *See—*
Ochiai, Michihiko; Okada, Taiiti; Aki, Osami; Morimoto, Akira; Kawakita, Kenji; and Matsushita, Yoshihiro, 4,298,606, Cl. 424-246.000.
Matsuura, Shizuya; and Konishi, Fumiya, to Matsushita Electric Industrial Co., Ltd. Process and apparatus for making fine-scale patterns. 4,298,803, Cl. 250-492.200.
Mattchen, Terry M., to American Safety Equipment Corporation. Surgical device using impulse motor. 4,298,074, Cl. 173-129.000.
Mattucci, Neil: *See—*
Land, Edwin H.; Cerankowski, Leon D.; and Mattucci, Neil, 4,298,674, Cl. 430-213.000.
Max-Planck-Gesellschaft zur Forderung Wissenschaften e.V.: *See—*
Claussen, Nils; and Steeb, Jorg, 4,298,385, Cl. 501-105.000.
Maxey, Carl W.; and Leyde, Warren, to Carl Maxey Company, The. Measuring apparatus. 4,298,286, Cl. 356-381.000.
May, George H., to Emerson Electric Co. Field replaceable electrode assembly for magnetic flowmeter. 4,297,896, Cl. 73-861.120.
Maydan, Dan, to Bell Telephone Laboratories, Incorporated. High capacity etching apparatus and method. 4,298,443, Cl. 204-192.00E.
Mayer, Andreas: *See—*
Fried, Reinhard; Mayer, Andreas; and Perego, Ambrogio, 4,298,028, Cl. 137-868.000.
Mayerjak, Robert J., to Currier Piano Company, Inc. Arm and key bed assembly for a piano and the like. 4,297,937, Cl. 84-430.000.
Mayr, Adolfo; Galli, Paolo; Susa, Ermanno; Di Drusco, Giovanni; and Giachetti, Ettore, to Montecatini Edison S.p.A. Catalysts for the polymerization of olefins. 4,298,718, Cl. 526-125.000.
McCain, G. Howard: *See—*
Baczek, Stanley K.; and McCain, G. Howard, 4,298,697, Cl. 521-27.000.
McCandless, Harry E., to RCA Corporation. Electron gun. 4,298,818, Cl. 313-417.000.
McCarter Corporation, The: *See—*
McCarter, Louis N., III; Deemer, W. Robert; Meeker, Robert G.; Weaver, Harry B.; and Smith, John W., 4,298,287, Cl. 366-4.000.
McCarter, Louis N., III; Deemer, W. Robert; Meeker, Robert G.; Weaver, Harry B.; and Smith, John W., to McCarter Corporation, The. Center draft asphaltic concrete drum mixer. 4,298,287, Cl. 366-4.000.
McCartney, Larry P.: *See—*
Saus, J. Arthur; and McCartney, Larry P., 4,298,405, Cl. 148-6.15R.
McCarty, John C.; and Wagner, Terrence E., to B. F. Goodrich Company, The. Powdered elastomers and process therefor. 4,298,654, Cl. 428-407.000.
McCarty, William J.; and Ruark, Bruce L., to General Electric Company. Air valve heat pump. 4,297,854, Cl. 62-325.000.
McCarty, William J.; and Ruark, Bruce L., to General Electric Company. Air valve heat pump. 4,297,855, Cl. 62-325.000.
McCulloch, Colin F.: *See—*
Atkinson, Donald A.; and McCulloch, Colin F., 4,298,191, Cl. 266-165.000.
McCurdy, Frederic, to Graphic Technology, Inc. Slide programming device. 4,298,124, Cl. 206-455.000.
McDonnell Douglas Corporation: *See—*
Kendall, John H., 4,298,176, Cl. 244-135.00A.
McDougal, Thomas F. Quick set hydraulically actuated clamping table. 4,298,195, Cl. 269-32.000.
McElligott, Michael J.; and Tkalenko, Victor J., Jr., to Burroughs Corporation. Protection system for documents. 4,298,216, Cl. 203-6.000.
McGill, Robert N., to Du Pont de Nemours, E. I., and Company. Isomerization of 2-methyl-3-butenenitrile. 4,298,546, Cl. 260-465.900.
McGinnis, Gerald E. Spring loaded exhalation valve. 4,298,023, Cl. 137-529.000.
McGovern, Terrence P.; and Schreck, Carl E., to United States of America, Agriculture. Insect repellents. 4,298,612, Cl. 424-267.000.
McGugan, John D., to Hunting Oilfield Services (U.K.) Limited. Pipe connectors. 4,298,221, Cl. 285-328.000.
McKee, William H., to TRW Inc. Electrical socket contact. 4,298,242, Cl. 339-258.00R.
McKeever, Mark R., to Du Pont de Nemours, E. I., and Company. Photosensitive compositions and elements containing substituted hydroxylamine. 4,298,678, Cl. 430-281.000.
McKinley, Milton A., to Surgeonics Limited. Controls for heating system. 4,298,165, Cl. 237-8.00R.
McLeod, Jesse C. Valve timer devices. 4,298,024, Cl. 137-624.110.
McNeilab, Inc.: *See—*
Rasmussen, Chris R., 4,298,746, Cl. 548-315.000.
McPhail, Shelvey C. Storm door assembly. 4,297,812, Cl. 49-386.000.
McQuay, William C.: *See—*
Altman, Wilbur E.; and McQuay, William C., 4,297,765, Cl. 17-66.000.
Mead Johnson & Company: *See—*
Temple, Davis L., Jr., 4,298,734, Cl. 544-251.000.
Mechtron International Corporation: *See—*
Butler, G. Theodore; Porter, Travis G.; and Fisher, Harold E., 4,298,337, Cl. 431-285.000.
Medlock, Alfred A. Method for modifying a fluid fuel metering jet orifice. 4,297,774, Cl. 29-157.00C.
Meeker, Robert G.: *See—*
McCarter, Louis N., III; Deemer, W. Robert; Meeker, Robert G.; Weaver, Harry B.; and Smith, John W., 4,298,287, Cl. 366-4.000.
Mehring, Jeffrey S.; Sayen, Ronald J.; Schara, Robert E.; Stocker, Charles T.; and Rodriguez, Juan G., to General Foods Corp. Protection against mite contamination. 4,298,624, Cl. 426-532.000.
Meier, Willi, to Dorina Nahmaschinen GmbH. Zigzag sewing machine having base-mounted operating elements for controlling sewing. 4,297,956, Cl. 112-158.00A.
Meiji Seika Kaisha, Ltd.: *See—*
Amano, Shoichi; Miyadoh, Shinji; Takahashi, Saeko; Ezaki, Norio; Niwa, Tomizo; and Yamada, Yujiro, 4,298,599, Cl. 424-119.000.
Meitner, Gary H., to Kimberly-Clark Corporation. Nonwoven disposable wiper. 4,298,649, Cl. 428-198.000.
Melis, Johannes H. A. M.; and Le Mair, Willem, to U.S. Philips Corporation. Portable element for receiving, storing, displaying and outputting digital data, and a reservation device for use in a reservation system. 4,298,793, Cl. 235-487.000.
Melling, John R., to Plessey Handel und Investments AG. Transistorized invertor. 4,298,925, Cl. 363-131.000.
Melton, Keith; Mercier, Olivier; and Taiana, Peter, to BBC Brown, Boveri & Company, Limited. Method of joining structural elements. 4,297,779, Cl. 29-446.000.
Meltz, Gerald: *See—*
Snitzer, Elias; and Meltz, Gerald, 4,298,794, Cl. 250-227.000.
Menashi, Jameel; Rappas, Alkis S.; and Douglas, Donald A., to Cabot Corporation. Vanadium recovery from scrap alloys. 4,298,582, Cl. 423-58.000.
Menashi, Jameel: *See—*
Douglas, Donald A.; Menashi, Jameel; and Rappas, Alkis S., 4,298,581, Cl. 423-58.000.
Mende, Ernst W. Hose water leveling instrument. 4,297,791, Cl. 33-367.000.

- Mendelsohn, Morris A., to Westinghouse Electric Corp. Epoxy-elastomer low temperature curable, solventless, sprayable, stator winding adhesive-bracing compositions. 4,298,656, Cl. 428-414.000.
- Mendola, Charles F., to Simala, John J., a part interest. Mining machine. 4,298,232, Cl. 299-64.000.
- Mercier, Jacques H., to Normand Trust. Adjustable pulse dampener. 4,298,030, Cl. 138-30.000.
- Mercier, Olivier: *See—*
  - Melton, Keith; Mercier, Olivier; and Taiana, Peter, 4,297,779, Cl. 29-446.000.
- Merck & Co., Inc.: *See—*
  - Cheng, Hsiung; and Wintersdorff, Peter, 4,298,729, Cl. 536-102.000.
  - Christensen, Burton G.; Guthikonda, Ravindra N.; and Ratcliffe, Ronald W., 4,298,741, Cl. 546-272.000.
  - Cragoe, Edward J., Jr.; Rooney, Clarence S.; and Williams, Haydn W. R., 4,298,743, Cl. 548-203.000.
  - Veeder, George T.; and Kang, Kenneth S., 4,298,691, Cl. 435-101.000.
- Meredith, Michael D.: *See—*
  - Bentvelzen, Jozef M.; Meredith, Michael D.; Torregrossa, Louis O.; and Bepple, Henry, 4,298,427, Cl. 162-57.000.
  - Torregrossa, Louis O.; Bentvelzen, Jozef M.; Crosby, Gerald D.; Meredith, Michael D.; and Bepple, Henry, 4,298,426, Cl. 162-57.000.
- Merten, Rudolf: *See—*
  - Lewalter, Jurgen; Rottmaier, Ludwig; Merten, Rudolf; Zecher, Wilfried; Dunwald, Willi; and Schulte, Bernhard, 4,298,515, Cl. 260-30.40N.
- Metal Innovations, Inc.: *See—*
  - Ayers, Maurice D., 4,298,553, Cl. 264-11.000.
- Metallurgie Hoboken-Overpelt: *See—*
  - Dompas, John; and Petry, Charles J., 4,298,053, Cl. 164-429.000.
- Metcalf, Paul T., II, to Keene Corporation. Fluorescent fixture socket. 4,298,918, Cl. 362-217.000.
- Meyborg, Holger; and Weber, Christian, to Bayer Aktiengesellschaft. Process for the production of elastic shaped articles. 4,298,701, Cl. 521-51.000.
- Meyer, Richard C.: *See—*
  - Lillig, John E.; and Meyer, Richard C., 4,298,570, Cl. 422-64.000.
- Meyers, Stuart R. Therapeutic shoe. 4,297,797, Cl. 36-44.000.
- Mezrich, Reuben S.; Vilkomerson, David H. R.; and Gardineer, Bayard, to Technicare Corporation. Ultrasound mammary scanning apparatus. 4,298,009, Cl. 128-660.000.
- Micca, Mario: *See—*
  - Norlander, Gosta; Vignotto, Angelo; and Micca, Mario, 4,298,079, Cl. 175-339.000.
- Michelet, Guy; and Treton, Jean-Pierre, to Quantel S.A. Thick optical element having a variable curvature. 4,298,247, Cl. 350-295.000.
- Micro-Circuits Company: *See—*
  - Bradley, Robert F.; and Bradley, Lindell P., 4,298,115, Cl. 194-4.00F.
- Microwave Antenna Systems and Technology Inc.: *See—*
  - Pellerin, Andrew P.; and Theophile, Christ, 4,298,850, Cl. 333-257.000.
- Mihai, Gabriel: *See—*
  - Alper, Yekutiel; Elkin, Itzhak; Wolf, Itzhak; Mihai, Gabriel; and Antler, Aharon, 4,297,832, Cl. 56-328.00R.
- Mihara, Haruhiko, to Matsushita Electric Works, Ltd. Rotary type microswitch. 4,298,779, Cl. 200-335.000.
- Mikami, Iwao: *See—*
  - Natsugari, Hideaki; Mikami, Iwao; and Ochiai, Michihiko, 4,298,607, Cl. 424-246.000.
- Miki, Masayuki: *See—*
  - Sasayama, Takao; Nishimura, Yutaka; Sakamoto, Shinichi; and Miki, Masayuki, 4,297,881, Cl. 73-204.000.
- Mikura, Chiho; and Shibata, Fujio, to TDK Electronics Co., Ltd. Method for smoothing both magnetic coat layers of magnetic recording medium. 4,298,631, Cl. 427-130.000.
- Miles, Wilbur N.: *See—*
  - Benjamin, Milton L.; and Miles, Wilbur N., 4,298,208, Cl. 279-91.000.
- Miller, Gary W.: *See—*
  - Barnes, Johnny G.; Hurley, Patrick J.; and Miller, Gary W., 4,298,290, Cl. 400-3.000.
- Miller, James W.: *See—*
  - Stover, K. Lawrence; Bueno, Alejandro G.; Miller, James W.; and Shamp, Donald E., 4,298,372, Cl. 65-136.000.
- Mills, Frank S., to Honeywell Inc. Conductive polymer film humidity sensor. 4,298,855, Cl. 338-35.000.
- Mills, Perry A.: *See—*
  - Wright, Thomas C.; Hudrlik, Terrence R.; Mills, Perry A.; Rust, Robert C.; and Wallner, Thomas G., 4,298,007, Cl. 128-419.0PG.
- Milstein, Donald: *See—*
  - Banta, Frederick; Milstein, Donald; and Peters, Alan W., 4,298,458, Cl. 208-112.000.
- Minagawa, Kenichiro: *See—*
  - Tanizaki, Yoshiharu; Minagawa, Kenichiro; and Takano, Yoshinori, 4,298,488, Cl. 252-78.100.
- Minagawa, Motonobu; Nakahara, Yutaka; and Takahashi, Masayuki, to Argus Chemical Corp. Phenolic ester synthetic resin stabilizers. 4,298,520, Cl. 260-45.80R.
- Minami, Setsuo: *See—*
  - Sugiura, Muneharu; Minoura, Kazuo; and Minami, Setsuo, 4,298,271, Cl. 355-8.000.
- Mindeli, Mamuka S.: *See—*
  - Barbakadze, Dzhondo F.; Mindeli, Mamuka S.; Macharashvili, Petr G.; Rusidze, Vazha V.; and Suladze, Otari N., 4,298,192, Cl. 266-218.000.
- Mineyuki, Seizo: *See—*
  - Ohashi, Tetsro; Kitamura, Osamu; Fujii, Hiromu; Mineyuki, Seizo; and Takeuchi, Eiichi, 4,298,050, Cl. 164-468.000.
- Ministry of International Trade & Industry: *See—*
  - Kawase, Kaoru; and Hayakawa, Kiyoshi, 4,298,698, Cl. 521-27.000.
- Minnesota Mining and Manufacturing Company: *See—*
  - Read, David M., 4,298,569, Cl. 422-27.000.
  - Thill, Gary A.; and Strand, Jerome E., 4,298,000, Cl. 128-218.00A.
- Minolta Camera Kabushiki Kaisha: *See—*
  - Matsuda, Motonobu; Matsui, Tohru; and Tanaka, Yoshihiro, 4,298,258, Cl. 354-25.000.
- Minoura, Kazuo: *See—*
  - Sugiura, Muneharu; Minoura, Kazuo; and Minami, Setsuo, 4,298,271, Cl. 355-8.000.
- Mitake, Kenjiro; and Kurakami, Osamu, to Nippon Electric Co., Ltd. Memory integrated circuit. 4,298,960, Cl. 365-210.000.
- Mitakidis, Dimitrios: *See—*
  - Leeming, Peter A.; Mitakidis, Dimitrios; and Woodrow, Peter F., 4,298,394, Cl. 106-111.000.
- Mitchell, Michael I.: *See—*
  - Jones, Eirwyn; and Mitchell, Michael I., 4,297,947, Cl. 361-248.000.
- Mitomi, Takeshi: *See—*
  - Miyagawa, Yoshiaki; and Mitomi, Takeshi, 4,298,643, Cl. 428-85.000.
- Mitsubishi Chemical Industries, Ltd.: *See—*
  - Ohmura, Yasuhiro; Murakami, Yukinobu; and Hidaka, Ryoji, 4,298,518, Cl. 260-32.6NA.
  - Uchida, Mitsuo; Oguri, Yasuo; Saito, Junji; and Kawahara, Tsukasa, 4,298,561, Cl. 264-86.000.
- Mitsubishi Denki Kabushiki Kaisha: *See—*
  - Akamatsu, Masahiko; and Uchida, Ryohei, 4,298,838, Cl. 324-117.00R.
  - Iwamura, Seishiro, 4,298,246, Cl. 350-122.000.
- Mitsubishi Gas Chemical Company, Inc.: *See—*
  - Saito, Masao; Hosokawa, Motoyuki; Kawakami, Takamasa; and Murayama, Yuko, 4,298,545, Cl. 260-465.00H.
- Mitsubishi Petrochemical Co., Ltd.: *See—*
  - Konno, Kazuhiko; Goh, Atsushi; and Sugaya, Kiyoshi, 4,298,740, Cl. 546-226.000.
- Mitsubishi Yuka Pharmaceutical Co., Ltd.: *See—*
  - Morinaka, Yasuhiro; and Takahashi, Kazuo, 4,298,610, Cl. 424-256.000.
- Mitsui Petrochemical Industries, Ltd.: *See—*
  - Morita, Yoshinori; Toyota, Akinori; and Kashiwa, Norio, 4,298,713, Cl. 525-323.000.
- Mitsui Toatsu Chemicals Incorporated: *See—*
  - Yamazaki, Noboru; Takase, Tsutomu; Morimoto, Yoshio; and Yuasa, Teruo, 4,298,720, Cl. 526-262.000.
- Miyadoh, Shinji: *See—*
  - Amano, Shoichi; Miyadoh, Shinji; Takahashi, Saeko; Ezaki, Norio; Niwa, Tomizo; and Yamada, Yujiro, 4,298,599, Cl. 424-119.000.
- Miyagawa, Yoshiaki; and Mitomi, Takeshi, to Toyo Boseki Kabushiki Kaisha. Fiber sheet for forming. 4,298,643, Cl. 428-85.000.
- Miyake, Haruhisa: *See—*
  - Asawa, Tatsuro; Miyake, Haruhisa; Yamashita, Masami; and Sugaya, Yoshio, 4,298,699, Cl. 521-31.000.
- Miyake, Toshiaki: *See—*
  - Umezawa, Hamao; Umezawa, Sumio; Tsuchiya, Tsutomu; Jikahara, Tomo; and Miyake, Toshiaki, 4,298,727, Cl. 536-10.000.
- Miyashita, Kiyoshi: *See—*
  - Tsuda, Hiroshi; Miyashita, Kiyoshi; Nishikawa, Masaji; Shimizu, Akira; and Kasuga, Muneo, 4,298,270, Cl. 355-3.0SH.
  - Tsuda, Hiroshi; Miyashita, Kiyoshi; Kimura, Katsuhiko; Arima, Heihachi; and Ishimoto, Osamu, 4,298,276, Cl. 355-72.000.
- Miyashita, Takeshi: *See—*
  - Togo, Shoichi; and Miyashita, Takeshi, 4,298,257, Cl. 354-23.00D.
- Miyauchi, Toshimitsu: *See—*
  - Tsunoda, Yoshito; Tatsuno, Kimio; Miyauchi, Toshimitsu; Aiki, Kunio; and Ito, Ryoichi, 4,298,974, Cl. 369-45.000.
- Mizue Kawakami: *See—*
  - Kawakami, Youichi, 4,298,183, Cl. 251-263.000.
- Mizuki, Eiichi: *See—*
  - Kubotera, Kikuo; Mizuki, Eiichi; Satomura, Masato; Iwano, Haruhiko; and Fujiwara, Tadahiro, 4,298,673, Cl. 430-204.000.
- Mizuma, Takashi, to Toyo Kogyo Co., Ltd. Sun-roof structure for automobile bodies. 4,298,226, Cl. 296-216.000.
- Mizuno, Toshiya; Ohta, Mitsuru; and Segawa, Masahiro, to Kureha Kagaku Kogyo Kabushiki Kaisha. Doubly oriented film of polyvinylidene fluoride. 4,298,719, Cl. 526-255.000.
- Mizuoka, Seishi: *See—*
  - Honda, Akira; Anzai, Takanori; Kitamura, Minoru; Ishikawa, Masaru; and Mizuoka, Seishi, 4,298,147, Cl. 222-601.000.
- Mobil Oil Corporation: *See—*
  - Banta, Frederick; Milstein, Donald; and Peters, Alan W., 4,298,458, Cl. 208-112.000.
  - Butter, Stephen A.; Chester, Arthur W.; and Schwartz, Albert B., 4,298,695, Cl. 518-720.000.
  - Davis, Robert H.; and Herd, Richard S., 4,298,483, Cl. 252-32.7HC.
  - Dennis, Charles L., 4,298,805, Cl. 376-111.000.
  - Horodysky, Andrew G.; and Kaminski, Joan M., 4,298,484, Cl. 252-46.700.

  - Horodysky, Andrew G.; and Kaminski, Joan M., 4,298,486, Cl. 252-49.600.
  - Ruehle, William H., 4,298,966, Cl. 367-50.000.
  - Ruehle, William H.; and Hodge, John D., 4,298,968, Cl. 367-59.000.
  - Schoennagel, Hans-Juergen; and Zahner, John C., 4,298,453, Cl. 208-10.000.
  - Yan, Tsoung-yuan; and Lozano, Raymond L., 4,298,578, Cl. 423-7.000.
  - Young, Lewis B., 4,298,547, Cl. 260-505.00A.
- Mochizuki, Koichi: *See—*
  - Takeuchi, Tsugio; Tsuge, Shin; Hirata, Yukio; and Mochizuki, Koichi, 4,298,795, Cl. 250-282.000.
- Moffet, John D.: *See—*
  - Moffet, John N.; Moffet, John D.; and Ragsdill, David L., 4,298,572, Cl. 422-68.000.
- Moffet, John N.; Moffet, John D.; and Ragsdill, David L., to Energy Detection Company. Mud logging system. 4,298,572, Cl. 422-68.000.
- Mohapatra, Sarat K.: *See—*
  - Boyd, Gary D.; Mohapatra, Sarat K.; Tell, Benjamin; Wagner, Sigurd; and Wudl, Fred, 4,298,250, Cl. 350-357.000.
- Moisar, Erik: *See—*
  - Becker, Manfred; Slabik, Angela; Mucke, Bruno; Moisar, Erik; and von Rintelen, Harald, 4,298,683, Cl. 430-569.000.
- Molinari, Ewald: *See—*
  - Seidel, Dietrich; Wieland, Heinrich; and Molinari, Ewald, 4,298,441, Cl. 204-180.00G.
- Mollura, Carlos A. Non-planar waterbed. 4,297,755, Cl. 5-455.000.
- Moloy, Peter J. Middle ear balloon. 4,297,748, Cl. 3-1.000.
- Monarch Machine Tool Company, The: *See—*
  - Bradlee, Charles R., 4,298,633, Cl. 427-172.000.
- Mondial Piston - Dott. Galli Ercole & C. S.p.A.: *See—*
  - Galli, Ercole, 4,297,975, Cl. 123-193.00P.
- Monley, Robert E.: *See—*
  - Schneider, Urban A.; Monley, Robert E.; Nelson, Robert L.; and Glatthorn, Raymond H., 4,298,783, Cl. 219-75.000.
- Monroe, Scott C., to Massachusetts Institute of Technology. Programmable zero-bias floating gate tapping method and apparatus. 4,298,953, Cl. 364-825.000.
- Monsanto Company: *See—*
  - Dufour, Daniel L., 4,298,716, Cl. 526-65.000.
  - Howe, Robert K.; and Lee, Len F., 4,298,375, Cl. 71-90.000.
  - Van Eenam, Donald N., 4,298,639, Cl. 427-386.000.
  - Van Eenam, Donald N., 4,298,715, Cl. 525-340.000.
- Montalto, Anthony R.; Scerbo, Louis J.; and Starace, Jeremia P., to Bell Telephone Laboratories, Incorporated. Test access apparatus. 4,298,239, Cl. 339-66.00M.
- Montecatini Edison S.p.A.: *See—*
  - Mayr, Adolfo; Galli, Paolo; Susa, Ermanno; Di Drusco, Giovanni; and Giachetti, Ettore, 4,298,718, Cl. 526-125.000.
- Montedison S.p.A.: *See—*
  - Borghi, Italo; Foschi, Sergio; and Galli, Paolo, 4,298,721, Cl. 526-348.000.
- Montgomery, Gary V., to Sunbeam Plastics Corporation. One-piece dispensing closure. 4,298,146, Cl. 222-536.000.
- Moore, Richard W.: *See—*
  - Wootton, Gordon; and Moore, Richard W., 4,298,745, Cl. 548-313.000.
- Moran, Harold J., to Switlik Parachute Company, Inc. Life preserver of the encapsulated type. 4,297,758, Cl. 9-340.000.
- Moraw, Roland; and Walter, Helmut, to Hoechst Aktiengesellschaft. Identity card. 4,298,217, Cl. 283-7.000.
- Morhart, Rudolf: *See—*
  - Bauer, Erwin; Davids, Ralf; Gotz, Gerhard; Jussen, Hilmar; Arndt, Heinrich; Kummel, Louis; Morhart, Rudolf; and Pollak-Banda, Erich, 4,297,917, Cl. 74-665.00G.
- Mori, Takasuke: *See—*
  - Narita, Kiichi; Mori, Takasuke; Ayata, Kenzo; and Makino, Takehisa, 4,298,376, Cl. 75-49.000.
- Morimoto, Akira: *See—*
  - Ochiai, Michihiko; Okada, Taiiti; Aki, Osami; Morimoto, Akira; Kawakita, Kenji; and Matsushita, Yoshihiro, 4,298,606, Cl. 424-246.000.
- Morimoto, Yoshio: *See—*
  - Yamazaki, Noboru; Takase, Tsutomu; Morimoto, Yoshio; and Yuasa, Teruo, 4,298,720, Cl. 526-262.000.
- Morinaka, Yasuhiro; and Takahashi, Kazuo, to Mitsubishi Yuka Pharmaceutical Co., Ltd. Ester derivatives of quinolopyran-4-one-2-carboxylic acids and antiallergic antasthmatics. 4,298,610, Cl. 424-256.000.
- Morita, Koyo: *See—*
  - Nishizuka, Hiroshi; Komoriya, Susumu; Morita, Koyo; and Osakaya, Takayoshi, 4,298,273, Cl. 355-61.000.
- Morita, Yoshinori; Toyota, Akinori; and Kashiwa, Norio, to Mitsui Petrochemical Industries, Ltd. Process for preparing low density ethylene copolymers. 4,298,713, Cl. 525-323.000.
- Moriya, Koji; and Furuoya, Itsuo, to Takeda Chemical Industries, Ltd. Production of maleic anhydride. 4,298,533, Cl. 260-346.750.
- Moro, Christian D.; and Ranini, Daniel G., to Poclain. Power arm fitted with coupling devices for a member provided to control its position. 4,297,815, Cl. 52-115.000.
- Moro, Kanji: *See—*
  - Oi, Nobuhiro; Aoki, Bunya; Shinozaki, Teizo; Moro, Kanji; Matsunaga, Isao; Noto, Takao; Nebashi, Toshiyuki; Harada, Yusuke; Endo, Hisao; Kimura, Takao; Okazaki, Hiroshi; Ogawa, Haruki; and Shindo, Minoru, 4,298,605, Cl. 424-246.000.
- Morokawa, Shigeru; and Koga, Keiichiro, to Citizen Watch Company Limited. Electronic timpiece. 4,298,971, Cl. 368-204.000.
- Moroto, Shuzo; and Kobayashi, Koji, to Aisin-Warner K.K. Automatic four-wheel drive transfer case. 4,298,085, Cl. 180-247.000.
- Morris Photo Ind. Co. Ltd.: *See—*
  - Nakayama, Yasuo, 4,298,826, Cl. 315-151.000.
- Morrow, Alan J.: *See—*
  - Bailey, Alan C.; and Morrow, Alan J., 4,298,365, Cl. 65-3.120.
- Morton, Donald F., to British Aerospace Public Limited Company. Gimbals. 4,297,904, Cl. 74-5.00F.
- Moses, Peter R., to Duracell International Inc. Predischarged nonaqueous cell. 4,298,663, Cl. 429-50.000.
- Mosier, Larry D.: *See—*
  - Lin, Wayne H. T.; Grib, James J.; and Mosier, Larry D., 4,298,592, Cl. 424-1.000.
- Moss Rosenberg Verft A.S.: *See—*
  - Tonnessen, Arne, 4,297,960, Cl. 114-74.00A.
- Motoren- und Turbinen-Union Friedrichshafen GmbH: *See—*
  - Kamleitner, Ewald, 4,297,979, Cl. 123-372.000.
- Motorola, Inc.: *See—*
  - Arneson, Steven H., 4,298,849, Cl. 333-193.000.
  - Kennedy, Peter D.; and Piesinger, Gregory H., 4,298,871, Cl. 343-100.0SA.
  - Perkins, Geoffrey W., 4,298,886, Cl. 358-74.000.
- Moulson, Thomas J.; and Greenzweig, John E., to Cargill Incorporated. Low shrink unsaturated polyester resinous composition. 4,298,711, Cl. 525-40.000.
- Mourray, Jack W., to Ford Motor Company. Upper mounting unit for MacPherson strut assembly. 4,298,193, Cl. 267-63.00R.
- Mouton, Martin J. Retractable fret system for stringed instruments. 4,297,936, Cl. 84-314.00R.
- Mucke, Bruno: *See—*
  - Becker, Manfred; Slabik, Angela; Mucke, Bruno; Moisar, Erik; and von Rintelen, Harald, 4,298,683, Cl. 430-569.000.
- Muehllehner, Gerd: *See—*
  - Stoub, Everett W.; Colsher, James G.; and Muehllehner, Gerd, 4,298,944, Cl. 364-515.000.
- Mueller, Margarete: *See—*
  - Distler, Dieter; Mueller, Margarete; Bubam, Hans-Georg; and Addicks, Guenther, 4,298,513, Cl. 260-29.70H.
- Mueller, Martin, to Owens-Illinois, Inc. Container fabricating machine. 4,298,331, Cl. 425-393.000.
- Muller, Helmuth; and Herrmann, Lother, to Kienzle Apparate GmbH. Scanning device for preselector counter mechanism. 4,298,791, Cl. 235-132.00R.
- Muller, Klaus; and Zimmermann, Andreas, to BBC Brown, Boveri & Company, Limited. Electrophoretic display. 4,298,448, Cl. 204-299.00R.
- Mumford, Eustace H.; and Perry, Jack I., to Owens-Illinois, Inc. Apparatus for cushioning the motion of reciprocating members. 4,298,373, Cl. 65-260.000.
- Munday, George; Slater, David H.; Tyley, Leonard R. T.; Berenblut, Brian J.; and Whitehouse, Harry B., to Insurance Technical Bureau, The. Method of and apparatus for the detection and analysis of hazards. 4,298,955, Cl. 364-900.000.
- Munker, Helmut: *See—*
  - Knoth, Werner D.; and Munker, Helmut, 4,298,371, Cl. 65-79.000.
- Murai, Keiichi; and Matsuo, Takehiko, to Canon Kabushiki Kaisha. Photosensitive element for electrophotography. 4,298,670, Cl. 430-67.000.
- Murakami, Keikichi, to Kawasaki Jukogyo Kabushiki Kaisha. Rotary steel converter, method of making steel there-with and method of applying refractory lining to converter. 4,298,378, Cl. 75-60.000.
- Murakami, Yukinobu: *See—*
  - Ohmura, Yasuhiro; Murakami, Yukinobu; and Hidaka, Ryoji, 4,298,518, Cl. 260-32.6NA.
- Murata Manufacturing Co., Ltd.: *See—*
  - Kaneko, Fumihiko; Nitta, Koichi; and Saito, Kouichi, 4,298,120, Cl. 206-329.000.
- Murayama, Seiichi: *See—*
  - Yamamoto, Manabu; Murayama, Seiichi; Ito, Masaru; and Oishi, Kounosuke, 4,298,284, Cl. 356-368.000.
- Murayama, Yuko: *See—*
  - Saito, Masao; Hosokawa, Motoyuki; Kawakami, Takamasa; and Murayama, Yuko, 4,298,545, Cl. 260-465.00H.
- Muroi, Masayuki: *See—*
  - Higashide, Eiji; Tanida, Seiichi; Muroi, Masayuki; and Asai, Mitsuko, 4,298,600, Cl. 424-120.000.
- Murphy, Susan F.: *See—*
  - Blaszyk, Paul E.; and Murphy, Susan F., 4,298,364, Cl. 65-3.110.
- Murray, Michael L. Multiple compartment containers. 4,298,119, Cl. 206-219.000.
- Mutai, Masahiko; Mada, Mitsuo; and Shimada, Kiyohiro, to Kabushiki Kaisha Yakult Honsha. Production of foods and drinks containing bifidobacteria. 4,298,619, Cl. 426-43.000.
- Mutzhas, Maxim F. Radiation apparatus. 4,298,005, Cl. 128-396.000.
- Myers, Richard A., to Ford Motor Company. Transmission gear selector control. 4,297,910, Cl. 74-473.00R.
- Nagai, Shunichi; and Higashi, Hidekazu, to Kabushiki Kaisha Komatsu Seisakusho. Control circuit for a press. 4,298,114, Cl. 192-129.00A.
- Nagaishi, Hatsuo; and Kita, Toru, to Nissan Motor Co., Ltd. Mass flow sensor. 4,297,894, Cl. 73-861.030.
- Nagashima, Mitsuo: *See—*
  - Saito, Shoji; and Nagashima, Mitsuo, 4,298,131, Cl. 220-231.000.

Nagata, Toshiyuki; Terashima, Masahiko; and Mashima, Kazuto, to Fuji Oil Company, Ltd. Method for manufacturing fried tofu products. 4,298,628, Cl. 426-656.000.
Nagy, Ferenc; Szabo, Ferenc; and Szucs, Zoltan F., to Magyar Aluminiumipari Troszt. Process and apparatus for the measurement of the anisotropy value of form changes in normal direction in sheet metals. 4,297,892, Cl. 73-826.000.
Nahemow, Martin D.: *See—*
Justice, James W. H.; and Nahemow, Martin D., 4,298,828, Cl. 315-248.000.
Naito, Hideshi: *See—*
Nozawa, Hideyo; and Naito, Hideshi, 4,298,262, Cl. 354-139.000.
Nakada, Kiyoshi: *See—*
Takahashi, Kihei; Terada, Seiko; and Nakada, Kiyoshi, 4,298,033, Cl. 139-450.000.
Nakagawa, Kazuyuki: *See—*
Nishi, Takao; Ueda, Hiraki; and Nakagawa, Kazuyuki, 4,298,739, Cl. 546-158.000.
Nakagawa, Takeo, to Keinosuke Aida. Steel fiber for reinforced concrete. 4,298,660, Cl. 428-599.000.
Nakahara, Yutaka: *See—*
Minagawa, Motonobu; Nakahara, Yutaka; and Takahashi, Masayuki, 4,298,520, Cl. 260-45.80R.
Nakahira, Nobuichi: *See—*
Terada, Sachio; Suhara, Akito; Shimada, Toshiro; Nakamura, Takashi; Hujii, Kunizo; and Nakahira, Nobuichi, 4,298,424, Cl. 156-668.000.
Nakaie, Yutaka: *See—*
Tamura, Hiroshi; and Nakaie, Yutaka, 4,298,947, Cl. 364-557.000.
Nakajima, Koichiro; and Watanabe, Masaharu, to Tokyo Shibaura Denki Kabushiki Kaisha. Method for growing a liquid phase epitaxial layer on a semiconductor substrate. 4,298,410, Cl. 148-172.000.
Nakajima, Yahei, to Ushio Denki Kabushikikaisha. Power source circuit for a flash discharge lamp. 4,298,827, Cl. 315-241.00R.
Nakamura, Haruka, to Ricoh Company, Ltd. Data communication apparatus. 4,298,978, Cl. 370-92.000.
Nakamura, Kyoichi: *See—*
Ueno, Takashi; and Nakamura, Kyoichi, 4,298,706, Cl. 521-92.000.
Nakamura, Noboru: *See—*
Takamura, Yoshio; Abe, Soichiro; Nakamura, Noboru; and Suzuki, Hiroyuki, 4,298,894, Cl. 358-229.000.
Nakamura, Takashi: *See—*
Terada, Sachio; Suhara, Akito; Shimada, Toshiro; Nakamura, Takashi; Hujii, Kunizo; and Nakahira, Nobuichi, 4,298,424, Cl. 156-668.000.
Nakao, Sho: *See—*
Shinozaki, Fumiaki; Washigawa, Yasuo; Ikeda, Tomoaki; Nakao, Sho; and Kondoh, Syunichi, 4,298,679, Cl. 430-281.000.
Nakashima, Yoichi: *See—*
Sakurada, Shuroku; Nakashima, Yoichi; Kojima, Isao; Yagi, Hideyuki; Kariya, Tadaaki; and Sugiyama, Masayoshi, 4,298,881, Cl. 357-38.000.
Nakayama, Yasuo, to Morris Photo Ind. Co. Ltd. Automatic flash unit. 4,298,826, Cl. 315-151.000.
Nakazawa, Kenichi: *See—*
Shichijo, Hajime; Yamamoto, Kenji; and Nakazawa, Kenichi, 4,298,851, Cl. 334-11.000.
Nalco Chemical Company: *See—*
Breslin, Michael D.; and Cosper, David R., 4,298,428, Cl. 162-73.000.
Cole, Jack L., 4,298,477, Cl. 210-674.000.
Colombo, Paul T., 4,298,497, Cl. 252-387.000.
Nara, Takashi: *See—*
Iida, Takao; Shirahata, Kunikatsu; Ishii, Shinzo; Okachi, Ryo; and Nara, Takashi, 4,298,690, Cl. 435-80.000.
Narita, Kiichi; Mori, Takasuke; Ayata, Kenzo; and Makino, Takehisa, to Kobe Steel, Ltd. Method for treating molten steel and apparatus therefor. 4,298,376, Cl. 75-49.000.
Nash, Larry E.: *See—*
Bosler, Alan J.; and Nash, Larry E., 4,298,905, Cl. 361-386.000.
Nasyrov, Nail Z.: *See—*
Bochkarev, Ellin P.; Prokopov, Igor V.; Eljutin, Alexandr V.; Belsky, Arkady A.; Baryshnikova, Svetlana M.; Nasyrov, Nail Z.; Novikov, Nikolai A.; Khairulin, Edige R.; Zvyagin, Mikhail S.; Abrjutin, Vladimir N.; Konstantinova, Ljubov I.; Ljubimova, Nina A.; and Gorbacheva, Nadezhda S., 4,298,380, Cl. 75-101.0BE.
Nathasingh, Davidson M.: *See—*
DeCristofaro, Nicholas J.; Freilich, Alfred; and Nathasingh, Davidson M., 4,298,409, Cl. 148-108.000.
National Patent Development Corporation: *See—*
Ronel, Samuel H.; D'Andrea, Mark J.; Dobelle, William H.; Klomp, Gregory F.; and Hashiguchi, Hiroshi, 4,298,002, Cl. 128-260.000.
National Research Development Corporation: *See—*
Perry, Forbes G. deB., 4,297,918, Cl. 74-690.000.
National Solar Corporation: *See—*
Easton, Anthony, 4,297,991, Cl. 126-448.000.
National-Standard Company: *See—*
Joyce, John F., 4,298,383, Cl. 75-211.000.
Natjitus, Donald P.; and Carlson, Curt T., to St. Anthony Hospital Systems. Portable patient call. 4,298,863, Cl. 340-573.000.
Natsugari, Hideaki; Mikami, Iwao; and Ochiai, Michihiko, to Takeda Chemical Industries, Ltd. Crystalline salt of 7β-[2-(2-aminothiazol-4-yl)-(Z)-2-methoxyiminoacetamido]-3-[(1-methyl-1H-tetrazol-5-yl)thiomethyl]ceph-3-em-4-carboxylic acid and HCl or HBr. 4,298,607, Cl. 424-246.000.
Naus, Hubert W.; and Bouvier, Alfred J., to International Telephone and Telegraph Corporation. Method of molding electrical connector insulator. 4,298,566, Cl. 264-317.000.
Nava, Pier L. Device to actuate helmet visors, particularly for motorcyclists. 4,297,747, Cl. 2-424.000.
Navarro, Felipe: *See—*
Gottschalk, Robert E.; and Navarro, Felipe, 4,298,149, Cl. 224-201.000.
Navire Cargo Gear International AB: *See—*
Oleborg, Said, 4,297,964, Cl. 114-263.000.
Naydan, Bob N.: *See—*
Acker, Robert H.; Wessling, William C.; Brand, Arnold J.; and Naydan, Bob N., 4,298,832, Cl. 318-318.000.
Naylor, Carter G.: *See—*
Schulze, Heinz; Zimmerman, Robert L.; and Naylor, Carter G., 4,298,708, Cl. 521-115.000.
Nebashi, Toshiyuki: *See—*
Oi, Nobuhiro; Aoki, Bunya; Shinozaki, Teizo; Moro, Kanji; Matsunaga, Isao; Noto, Takao; Nebashi, Toshiyuki; Harada, Yusuke; Endo, Hisao; Kimura, Takao; Okazaki, Hiroshi; Ogawa, Haruki; and Shindo, Minoru, 4,298,605, Cl. 424-246.000.
Neef, Gunter; Eder, Ulrich; Haffer, Gregor; and Sauer, Gerhard, to Schering, Aktiengesellschaft. 16-Dimethylaminomethylene-3-methoxy-1,3,5-(10)-estratrien-17-one, a process for the preparation thereof and its use as a preparative intermediate. 4,298,538, Cl. 260-397.400.
Neff, James A., to Mac Valves, Inc. Three-way normally closed pilot valve. 4,298,027, Cl. 137-625.650.
Nei, Hiromichi; Ohtani, Ryoichi; Ohshima, Iwao; and Horikawa, Yuji, to Tokyo Shibaura Denki Kabushiki Kaisha. Plugging device. 4,297,873, Cl. 73-61.0LM.
Nelson, Daniel E.: *See—*
Klem, John E.; and Nelson, Daniel E., 4,297,914, Cl. 74-532.000.
Nelson, Lorne W., to Honeywell Inc. Heat pump setback temperature control with cold weather override. 4,298,056, Cl. 165-12.000.
Nelson, Robert L.: *See—*
Schneider, Urban A.; Monley, Robert E.; Nelson, Robert L.; and Glatthorn, Raymond H., 4,298,783, Cl. 219-75.000.
Neth, Walter, to Columbia Machine, Inc. Method and apparatus for transferring loads. 4,298,305, Cl. 414-498.000.
Neuworth, Martin B., to United States of America, Energy. Two stage liquefaction of coal. 4,298,451, Cl. 208-8.0LE.
Nevstruev, Vladimir I.: *See—*
Batalin, Oleg E.; Dykman, Arkady S.; Osadchenko, Alexandr I.; Balkhanova, Galina F.; Belgorodsky, Izrail M.; Nevstruev, Vladimir I.; Radionov, Valery A.; Tulchinsky, Eduard A.; Belyaev, Valentin M.; Smolin, Jury I.; Breiman, Mark J.; Orlyansky, Vitaly V.; Zhirnov, Nikolai Y.; Galibin, Nikolai V.; Troitsky, Adrian P.; and Kovalenko, Vladimir V., 4,298,503, Cl. 252-432.000.
Newell, Marvin H. Guidance system for tracklaying tractors. 4,298,084, Cl. 180-131.000.
NGK Insulators, Ltd.: *See—*
Higuchi, Noboru; and Futamura, Shoji, 4,298,564, Cl. 264-177.00R.
Ito, Isao, 4,298,285, Cl. 356-376.000.
Nicolas, Jean C.; Terouanne, Beatrice; Descomps, Bernard; and De Paulet, Andre C., to Institut National de la Sante et de la Recherche Medicale (INSERM). Method of immunoenzymatic assay utilizing Δ5,3-keto-steroid isomerase. 4,298,686, Cl. 435-7.000.
Niemeyer, John F., to Coin Acceptors, Inc. String detector for a coin-selecting device. 4,298,116, Cl. 194-97.00R.
Nihira, Shohachi, to Citizen Watch Co., Ltd. Print hammer driving means for impact printers. 4,297,944, Cl. 101-93.310.
Nilsen, Arthur A.: *See—*
Benson, Clark K.; Caridis, Andrew A.; and Nilsen, Arthur A., 4,297,942, Cl. 99-386.000.
Nippon Electric Co., Ltd.: *See—*
Hamano, Kuniyuki; and Ohta, Toshiyuki, 4,298,962, Cl. 365-182.000.
Mitake, Kenjiro; and Kurakami, Osamu, 4,298,960, Cl. 365-210.000.
Nippon Gakki Seizo Kabushiki Kaisha: *See—*
Imamura, Akio; and Oya, Akiyoshi, 4,297,934, Cl. 84-1.030.
Nishimoto, Tetsuo, 4,297,933, Cl. 84-1.010.
Nippon Kogaku K.K.: *See—*
Hasegawa, Hiroshi, 4,298,263, Cl. 354-234.000.
Nozawa, Hideyo; and Naito, Hideshi, 4,298,262, Cl. 354-139.000.
Saegusa, Takashi, 4,298,870, Cl. 340-785.000.
Tanaka, Etsuo; and Kato, Hironobu, 4,298,265, Cl. 354-246.000.
Nippon Kokan Kabushiki Kaisha: *See—*
Honda, Akira; Anzai, Takanori; Kitamura, Minoru; Ishikawa, Masaru; and Mizuoka, Seishi, 4,298,147, Cl. 222-601.000.
Nippon Mining Company, Limited: *See—*
Fujimori, Kuniaki; Suzuka, Teruo; Inoue, Yukio; and Aizawa, Shirou, 4,298,460, Cl. 208-121.000.
Nippon Oil and Fats Co., Ltd.: *See—*
Tanizaki, Yoshiharu; Minagawa, Kenichiro; and Takano, Yoshinori, 4,298,488, Cl. 252-78.100.
Nippon Steel Corporation: *See—*
Ikeno, Teruo; Kado, Satoshi; Ayusawa, Saburo; Kawasaki, Hironobu; and Watanabe, Takashi, 4,298,661, Cl. 428-623.000.
Ohashi, Tetsro; Kitamura, Osamu; Fujii, Hiromu; Mineyuki, Seizo; and Takeuchi, Eiichi, 4,298,050, Cl. 164-468.000.

Nippon Zeon Co. Ltd.: *See—*
Tamura, Mitsuhiro; Ohishi, Tetsuo; and Sakurai, Hiroshi, 4,298,522, Cl. 260-45.9QB.
Nishi, Takao; Ueda, Hiraki; and Nakagawa, Kazuyuki, to Otsuka Pharmaceutical Co., Ltd. Novel carbostyril derivatives. 4,298,739, Cl. 546-158.000.
Nishihara, Mikio; Oda, Masahiro; and Tsuchimoto, Takamitsu, to Fujitsu Limited. Printed board. 4,298,770, Cl. 174-68.500.
Nishikawa, Masaji: *See—*
Tsuda, Hiroshi; Miyashita, Kiyoshi; Nishikawa, Masaji; Shimizu, Akira; and Kasuga, Muneo, 4,298,270, Cl. 355-3.0SH.
Nishikawa, Masao; and Yamamoto, Hitoshi, to Honda Giken Kogyo Kabushiki Kaisha. Shock absorber for vehicle use. 4,298,102, Cl. 188-319.000.
Nishikawa, Osamu; Ishimaru, Kenji; Takeshita, Toru; and Tsuruta, Hideki, to Teijin Limited. Process for producing steroid compounds having an oxo group in the side chain. 4,298,537, Cl. 260-397.200.
Nishimatsu, Shigeru: *See—*
Suzuki, Keizo; Okudaira, Sadayuki; Nishimatsu, Shigeru; and Kanomata, Ichiro, 4,298,419, Cl. 156-345.000.
Nishimoto, Tetsuo, to Nippon Oakki Seizo Kabushiki Kaisha. Electronic musical instrument for tone formation by selectable tone synthesis computations. 4,297,933, Cl. 84-1.010.
Nishimura, Yutaka: *See—*
Sasayama, Takao; Nishimora, Yutaka; Sakamoto, Shinichi; and Miki, Masayuki, 4,297,881, Cl. 73-204.000.
Nishizuka, Hiroshi; Komoriya, Susumu; Morita, Koyo; and Osakaya, Takayoshi, to Hitachi, Ltd. Projection aligner and method of positioning a wafer. 4,298,273, Cl. 355-61.000.
Nissan Motor Company, Limited: *See—*
Fujishiro, Takeshi, 4,298,573, Cl. 422-94.000.
Kogo, Hiroshi; Tonooka, Mamoru; Aoki, Teruhisa; Ando, Shigeo; and Tomiyama, Raiji, 4,298,965, Cl. 367-13.000.
Matsul, Katsuhiko, 4,297,978, Cl. 123-339.000.
Nagaishi, Hatsuo; and Kita, Toru, 4,297,894, Cl. 73-861.030.
Takaki, Masaoki; Sawano, Hirokazu; Yamanaka, Kunio; Asada, Kazuyoshi; Hideshima, Keiji; and Koyanagi, Haruo, 4,298,958, Cl. 364-900.000.
Niswander, James K.: *See—*
Stattel, Raymond J.; and Niswander, James K., 4,298,987, Cl. 375-106.000.
Nitta, Koichi: *See—*
Kaneko, Fumihiko; Nitta, Koichi; and Saito, Kouichi, 4,298,120, Cl. 206-329.000.
Niwa, Kuniyuki: *See—*
Etoh, Kunihiko; Ishigaki, Tamotsu; and Niwa, Kuniyuki, 4,298,928, Cl. 364-200.000.
Niwa, Tomizo: *See—*
Amano, Sboichi; Miyadoh, Shinji; Takahashi, Saeko; Ezaki, Norio; Niwa, Tomizo; and Yamada, Yujiro, 4,298,599, Cl. 424-119.000.
Nixon, John M., to Edo-Aire Mitchell. Stabilized DC amplifier. 4,298,843, Cl. 330-9.000.
NL Industries, Inc.: *See—*
Page, Enno H., 4,298,051, Cl. 164-72.000.
Nolf, Jean-Marie E., to N.V. Raychem S.A. Branch-off method. 4,298,415, Cl. 156-85.000.
Nomura, Akihiro: *See—*
Yoshimura, Shigeru; Nomura, Akihiro; and Hayakawa, Kimiaki, 4,298,279, Cl. 355-133.000.
Nonoyama, Takao: *See—*
Inada, Masami; Kitamura, Kazuhiko; Ito, Shoji; Nonoyama, Takao; and Tsuji, Riichi, 4,298,020, Cl. 137-315.000.
Noonan, Edward B.: *See—*
Cassoo, Harold V.; Crabtree, Grant G.; Kindi, Bruno; and Noonan, Edward B., 4,298,416, Cl. 156-87.000.
Norberg, Gayle R.; and Hartung, Lee R., to Control Data Corporation. Monitor and control apparatus. 4,298,860, Cl. 340-825.040.
Norlander, Gosta; Vignotto, Angelo; and Micca, Mario, to Sandvik Aktiebolag; and Aktiebolaget SKF. Rotary drill bit. 4,298,079, Cl. 175-339.000.
Normand Trust: *See—*
Mercier, Jacques H., 4,298,030, Cl. 138-30.000.
Normann, Carl N. Line routing and storing device. 4,297,802, Cl. 43-4.000.
Northern Engineering Industries, Ltd.: *See—*
Emmett, James R., 4,298,696, Cl. 521-26.000.
Northern Telecom Ltd.: *See—*
Kapuscinski, Marek; and Gervais, Michel, 4,298,630, Cl. 427-44.000.
Noto, Takao: *See—*
Oi, Nobuhiro; Aoki, Bunya; Shinozaki, Teizo; Moro, Kanji; Matsunaga, Isao; Noto, Takao; Nebashi, Toshiyuki; Harada, Yusuke; Endo, Hisao; Kimura, Takao; Okazaki, Hiroshi; Ogawa, Haruki; and Shindo, Minoru, 4,298,605, Cl. 424-246.000.
Novikov, Nikolai A.: *See—*
Bochkarev, Ellin P.; Prokopov, Igor V.; Eljutin, Alexandr V.; Belsky, Arkady A.; Baryshnikova, Svetlana M.; Nasyrov, Nail Z.; Novikov, Nikolai A.; Khairulin, Edige R.; Zvyagin, Mikhail S.; Abrjutin, Vladimir N.; Konstantioova, Ljubov I.; Ljubimova, Nina A.; and Gorbacheva, Nadezhda S., 4,298,380, Cl. 75-101.0BE.
Nowack, William C. Indnstrial oven having air recirculating means for minimizing heat loss. 4,298,341, Cl. 432-64.000.
Noyes, Paul R.: *See—*
Sommerfeld, Eugene G.; and Noyes, Paul R., 4,298,724, Cl. 528-302.000.
Nozaki, Takao; Ito, Takashi; Arakawa, Hideki; Ishikawa, Hajime; and Shinoda, Masaichi, to Fujitsu Limited. Method for forming a nitride insulating film on a silicon semiconductor substrate surface by direct nitridation. 4,298,629, Cl. 427-39.000.
Nozawa, Hideyo; and Naito, Hideshi, to Nippon Kogaku K.K. Aperture device of a lens capable of close proximity flash photography. 4,298,262, Cl. 354-139.000.
NTN Toyo Bearing Company, Limited: *See—*
Kimata, Kei; Yasuda, Yoshinobu; Yoshida, Isamu; and Saruta, Masahiro, 4,297,981, Cl. 123-454.000.
Nuesch, Jakob: *See—*
Schupp, Thomas; Traxler, Peter; and Nuesch, Jakob, 4,298,692, Cl. 435-119.000.
Nuez, Jean-Paul; and Lebesnerais, Gerard, to International Business Machines Corp. Breakdown voltage resistor obtained through a double ion-implantation into a semiconductor substrate, and manufacturing process of tbe same. 4,298,401, Cl. 148-1.500.
Nutting Truck and Caster Company: *See—*
Funk, Larry J.; and Bluhm, Eugene A., 4,297,950, Cl. 104-172.0BT.
N.V. APR Europe S.A.: *See—*
Bruno, Vogel, 4,298,680, Cl. 430-300.000.
N.V. Raychem S.A.: *See—*
Boettcher, Bodo, 4,298,641, Cl. 428-36.000.
Nolf, Jean-Marie E., 4,298,415, Cl. 156-85.000.
Nypaver, Leonard P.: *See—*
Stroup, John F.; Nypaver, Leonard P.; and Eberst, Dale S., 4,297,901, Cl. 73-862.530.
Obayashi, Tsutomu; and Hiraoka, Hideyuki, to Hiraoka & Co., Ltd. Tarpaulins having great tearing strength. 4,298,645, Cl. 428-110.000.
Oberpichler, Gerd: *See—*
Dorpmund, Heinz; and Oberpichler, Gerd, 4,298,109, Cl. 192-0.044.
Oblad, Alex G.; Shabtai, Joseph; and Ramakrishnan, Rasmasamy, to University of Utah. Hydropyrolysis process for upgrading heavy oils and solids into light liquid products. 4,298,457, Cl. 208-107.000.
Oblinger, Fred: *See—*
Weintraub, Marvin H.; and Oblinger, Fred, 4,298,901, Cl. 361-178.000.
O'Brien, Harold A., Jr.; Hupf, Homer B.; and Wanek, Philip M., to United States of America, Energy. Instantaneous radioiodination of rose bengal at room temperature and a cold kit therefor. 4,298,591, Cl. 424-1.000.
O'Brien, Leo K.: *See—*
Sullivan, Roger M., 4,298,875, Cl. 343-112.0CA.
Occidental Research Corporation: *See—*
Beuer, Hans F., 4,298,350, Cl. 44-1.00C.
DiGiacomo, Peter M.; and Dines, Martin B., 4,298,723, Cl. 528-271.000.
Gabbay, Shlomo M., 4,298,349, Cl. 44-1.00C.
Hard, Robert A., 4,298,437, Cl. 204-70.000.
Sikdar, Subhas K., 4,298,586, Cl. 423-339.000.
Ochiai, Michihiko; Okada, Taiiti; Aki, Osami; Morimoto, Akira; Kawakita, Kenji; and Matsushita, Yoshihiro, to Takeda Chemical Industries, Ltd. Thiazolylacetamido compounds. 4,298,606, Cl. 424-246.000.
Ochiai, Michihiko: *See—*
Natsugari, Hideaki; Mikami, Iwao; and Ochiai, Michihiko, 4,298,607, Cl. 424-246.000.
O'Connor, Brian J. Carrier rack. 4,298,151, Cl. 224-329.000.
Oda, Masahiro: *See—*
Nishihara, Mikio; Oda, Masahiro; and Tsuchimoto, Takamitsu, 4,298,770, Cl. 174-68.500.
Oden, Kenneth W., to Dixie-Narco, Inc. Tandem column vender apparatus. 4,298,138, Cl. 221-115.000.
Oertle, Donald H.: *See—*
Hein, Norman W., Jr.; and Oertle, Donald H., 4,297,885, Cl. 73-587.000.
Office National d'Etudes et de Recherches Aerospaticles: *See—*
Bernard, Claude R.; Daigne, Bernard; and Girard, Francois, 4,298,797, Cl. 250-372.000.
Ogawa, Haruki: *See—*
Oi, Nobuhiro; Aoki, Bunya; Shinozaki, Teizo; Moro, Kanji; Matsunaga, Isao; Noto, Takao; Nebashi, Toshiyuki; Harada, Yusuke; Endo, Hisao; Kimura, Takao; Okazaki, Hiroshi; Ogawa, Haruki; and Shindo, Minoru, 4,298,605, Cl. 424-246.000.
Ogihara, Hirotomo: *See—*
Kudo, Mitsuhiro; Otomo, Shigekazu; Ogihara, Hirotomo; and Aoki, Yoshio, 4,298,381, Cl. 75-124.000.
Ogihara, Masuo; Chimura, Kozo; Shinozaki, Nobuo; and Seki, Yoichi, to Seiko Koki Kabushiki Kaisha. Alarm signaling time detecting device for leaf type digital clock. 4,298,972, Cl. 368-222.000.
Ogiwara, Takeo: *See—*
Ohya, Masaki; Kobayashi, Akio; Ogiwara, Takeo; and Satake, Yoshikatsu, 4,298,710, Cl. 525-5.000.
Oguri, Yasuo: *See—*
Uchida, Mitsuo; Oguri, Yasuo; Saito, Junji; and Kawahara, Taukasa, 4,298,561, Cl. 264-86.000.
Oguro, Tomokatsu: *See—*
Daikoku, Takahiro; and Oguro, Tomokatsu, 4,298,825, Cl. 315-39.510.
Ohashi, Tetsro; Kitamura, Osamu; Fujii, Hiromu; Mineyuki, Seizo; and Takeuchi, Eiichi, to Nippon Steel Corporation. Process for continuous casting of a slightly deoxidized steel slab. 4,298,050, Cl. 164-468.000.
Ohba, Kenjiro; Izumi, Kaichi; and Yasuda, Shinichiro, to Kao Soap Co., Ltd. Phosphate ester-based fire resistant hydraulic fluid containing an aliphatic polyester. 4,298,489, Cl. 252-78.500.

Ohishi, Tetsuo: *See—*
Tamura, Mitsuhiro; Ohishi, Tetsuo; and Sakurai, Hiroshi, 4,298,522, Cl. 260-45.9QB.
Ohmi, Hidehiko; and Ishibashi, Kazuhisa, to Toyo Seikan Kaisha, Ltd. Apparatus for dispensing and molding lining material into metallic cap shells. 4,298,320, Cl. 425-110.000.
Ohmura, Yasuhiro; Murakami, Yukinobu; and Hidaka, Ryoji, to Mitsubishi Chemical Industries, Ltd. Polyamide resin composition. 4,298,518, Cl. 260-32.6NA.
Ohno, Hideshi: *See—*
Watanabe, Minoru; Kume, Kazunari; Ohno, Hideshi; and Tamaru, Munetaka, 4,297,838, Cl. 368-76.000.
Ohshima, Iwao: *See—*
Nei, Hiromichi; Ohtani, Ryoichi; Ohshima, Iwao; and Horikawa, Yuji, 4,297,873, Cl. 73-61.0LM.
Ohta, Mitsuru: *See—*
Mizuno, Toshiya; Ohta, Mitsuru; and Segawa, Masahiro, 4,298,719, Cl. 526-255.000.
Ohta, Toshiyuki: *See—*
Hamano, Kuniyuki; and Ohta, Toshiyuki, 4,298,962, Cl. 365-182.000.
Ohtani, Ryoichi: *See—*
Nei, Hiromichi; Ohtani, Ryoichi; Ohshima, Iwao; and Horikawa, Yuji, 4,297,873, Cl. 73-61.0LM.
Ohya, Masaki; Kobayashi, Akio; Ogiwara, Takeo; and Satake, Yoshikatsu, to Kureha Kagaku Kogyo Kabushiki Kaisha. Antistatic resin composition. 4,298,710, Cl. 525-5.000.
Oi, Nobuhiro; Aoki, Bunya; Shinozaki, Teizo; Moro, Kanji; Matsunaga, Isao; Noto, Takao; Nebashi, Toshiyuki; Harada, Yusuke; Endo, Hisao; Kimura, Takao; Okazaki, Hiroshi; Ogawa, Haruki; and Shindo, Minoru, to Chugai Seiyaku Kabushiki Kaisha. Cephalosporin derivatives. 4,298,605, Cl. 424-246.000.
Oide, Kunimasa; and Ishii, Hideo, to Daichiku Company, Limited. Connected temporary fastening nails for use in the adhesive installation of ornamental plywood. 4,298,121, Cl. 206-347.000.
Oishi, Kounosuke: *See—*
Yamamoto, Manabu; Murayama, Seiichi; Ito, Masaru; and Oishi, Kounosuke, 4,298,284, Cl. 356-368.000.
Okachi, Ryo: *See—*
Iida, Takao; Shirahata, Kunikatsu; Ishii, Shinzo; Okachi, Ryo; and Nara, Takashi, 4,298,690, Cl. 435-80.000.
Okada, Taiiti: *See—*
Ochiai, Michihiko; Okada, Taiiti; Aki, Osami; Morimoto, Akira; Kawakita, Kenji; and Matsushita, Yoshihiro, 4,298,606, Cl. 424-246.000.
Okada, Takashi, to Sony Corporation. Luminance control circuit for a television receiver. 4,298,885, Cl. 358-39.000.
Okazaki, Hiroshi: *See—*
Oi, Nobuhiro; Aoki, Bunya; Shinozaki, Teizo; Moro, Kanji; Matsunaga, Isao; Noto, Takao; Nebashi, Toshiyuki; Harada, Yusuke; Endo, Hisao; Kimura, Takao; Okazaki, Hiroshi; Ogawa, Haruki; and Shindo, Minoru, 4,298,605, Cl. 424-246.000.
O'Keefe, David B.: *See—*
Rathbun, Donald J.; and O'Keefe, David B., 4,298,956, Cl. 364-900.000.
Okudaira, Sadayuki: *See—*
Suzuki, Keizo; Okudaira, Sadayuki; Nishimatsu, Shigeru; and Kanomata, Ichiro, 4,298,419, Cl. 156-345.000.
Okuno, Yasuo, to Zaidan Hojin Handotai Kenkyu Shinkokai. Light-emitting diode display. 4,298,869, Cl. 340-782.000.
Olashaw, William F., to General Electric Company. Bolted/welded joint and method of perfecting same. 4,298,771, Cl. 174-71.00B.
Oldford, William G., to U.S. Industries, Inc. Apparatus for fabricating pulley rims. 4,297,869, Cl. 72-405.000.
Oleborg, Said, to Navire Cargo Gear International AB. Mobile caisson structure. 4,297,964, Cl. 114-263.000.
Olin Corporation: *See—*
Specht, Steven J.; and Kircher, Morton S., 4,297,923, Cl. 81-57.410.
Olin, Henry; Tallberg, Nils; and Varis, Martti, to Oy Wartsila AB. Sewer system. 4,297,751, Cl. 4-431.000.
Olivari, Humbert. Debris picker and bagger. 4,297,760, Cl. 15-79.00R.
Oliver, Colin C., to EMI Limited. Radiography. 4,298,799, Cl. 250-445.00T.
Olivier, Herve: *See—*
Malafosse, Jean; Girou, Andre; Olivier, Herve; and Dupont, Michel, 4,298,585, Cl. 423-279.000.
Olson, Daniel R.: *See—*
Schroeter, Siegfried H.; and Olson, Daniel R., 4,298,632, Cl. 427-160.000.
Olympus Optical Co., Ltd.: *See—*
Ida, Hideaki; and Fujimori, Ryo, 4,298,449, Cl. 204-299.00R.
Kitagawa, Masahiro, 4,298,261, Cl. 354-139.000.
Takayama, Syuichi, 4,298,260, Cl. 354-50.000.
Tsuda, Hiroshi; Miyashita, Kiyoshi; Nishikawa, Masaji; Shimizu, Akira; and Kasuga, Muneo, 4,298,270, Cl. 355-3.0SH.
Tsuda, Hiroshi; Miyashita, Kiyoshi; Kimura, Katsuhiko; Arima, Heihachi; and Ishimoto, Osamu, 4,298,276, Cl. 355-72.000.
O'Mahony, Gerard. Heteropolar machine for demodulating polyphase voltages interfering among themselves. 4,298,842, Cl. 329-50.000.
Onda, Kenichi; and Amano, Hisao, to Hitachi, Ltd. Gate circuit for gate turn-off thyristor. 4,298,809, Cl. 307-252.00C.
Oohashi, Kenichi: *See—*
Kubo, Kazuhiko; Takahashi, Akira; and Oohashi, Kenichi, 4,298,386, Cl. 501-80.000.
Opfer, Gerald D. Power dissipation regulating circuit for induction motor by supply voltage control in function of phase angle. 4,298,834, Cl. 318-729.000.
Optilon W. Erich Heilmann GmbH: *See—*
Wulz, Helmut, 4,297,770, Cl. 24-205.16R.
Orillion, Michael T., to Dow Chemical Company, The. Corrosion protection for metal surfaces. 4,298,657, Cl. 428-416.000.
Orlowski, Gerald J., to Armour and Company. Molding apparatus. 4,298,326, Cl. 425-219.000.
Orlyansky, Vitaly V.: *See—*
Batalin, Oleg E.; Dykman, Arkady S.; Osadchenko, Alexandr I.; Balkhanova, Galina F.; Belgorodsky, Izrail M.; Nevstruev, Vladimir I.; Radionov, Valery A.; Tulchinsky, Eduard A.; Belyaev, Valentin M.; Smolin, Jury I.; Breiman, Mark I.; Orlyansky, Vitaly V.; Zhirnov, Nikolai Y.; Galibin, Nikolai V.; Troitsky, Adrian P.; and Kovalenko, Vladimir V., 4,298,503, Cl. 252-432.000.
Ortho Pharmaceutical Corporation: *See—*
Heavner, George, 4,298,523, Cl. 260-112.50R.
Osadchenko, Alexandr I.: *See—*
Batalin, Oleg E.; Dykman, Arkady S.; Osadchenko, Alexandr I.; Balkhanova, Galina F.; Belgorodsky, Izrail M.; Nevstruev, Vladimir I.; Radionov, Valery A.; Tulchiosky, Eduard A.; Belyaev, Valentin M.; Smolin, Jury I.; Breiman, Mark I.; Orlyansky, Vitaly V.; Zhirnov, Nikolai Y.; Galibin, Nikolai V.; Troitsky, Adrian P.; and Kovalenko, Vladimir V., 4,298,503, Cl. 252-432.000.
Osakaya, Takayoshi: *See—*
Nishizuka, Hiroshi; Komoriya, Susumu; Morita, Koyo; and Osakaya, Takayoshi, 4,298,273, Cl. 355-61.000.
Osta, Francesco. Device for applying an operating pressure to a roller. 4,297,967, Cl. 118-117.000.
Ostling, Ingemar K., to Sandvik Aktiebolag. Sealing element. 4,298,205, Cl. 277-197.000.
Oswald, Alexis A.; Jermansen, Torris G.; Westner, Andrew A.; and Huang, I-Der, to Exxon Research & Engineering Co. Trihydrocarbyl silyl-substituted alkyl diaryl phosphine transition metal complexes and their use as homogeneous catalysts. 4,298,541, Cl. 260-429.00R.
Otomo, Shigekazu: *See—*
Kudo, Mitsuhiro; Otomo, Shigekazu; Ogihara, Hirotomo; and Aoki, Yoshio, 4,298,381, Cl. 75-124.000.
Otsuka Pharmaceutical Co., Ltd.: *See—*
Nishi, Takao; Ueda, Hiraki; and Nakagawa, Kazuyuki, 4,298,739, Cl. 546-158.000.
Ott, Paul W.: *See—*
Van Steenwyk, Donald H.; Cash, John R.; and Ott, Paul W., 4,297,790, Cl. 33-313.000.
Owens-Corning Fiberglas Corporation: *See—*
Froberg, Magnus L.; and Schroeder, Charles F., 4,298,369, Cl. 65-27.000.
Owens-Illinois, Inc.: *See—*
Babington, Robert S., 4,298,338, Cl. 431-352.000.
Mueller, Martin, 4,298,331, Cl. 425-393.000.
Mumford, Eustace H.; and Perry, Jack I., 4,298,373, Cl. 65-260.000.
Taylor, Lynn J.; and Grier, John D., 4,298,516, Cl. 260-31.80R.
Owens, Walter K. Newspaper and magazine vending machine. 4,298,140, Cl. 221-232.000.
Oy Wartsila AB: *See—*
Olin, Henry; Tallberg, Nils; and Varis, Martti, 4,297,751, Cl. 4-431.000.
Oya, Akiyoshi: *See—*
Imamura, Akio; and Oya, Akiyoshi, 4,297,934, Cl. 84-1.030.
Ozero, Donna U.: *See—*
Critchlow, James A.; and Ozero, Donna U., 4,298,275, Cl. 355-71.000.
Rees, James D.; Altfather, Kenneth W., Jr.; Lama, William L.; and Ozero, Donna U., 4,298,274, Cl. 355-71.000.
P. Ferrero & C. S.p.A.: *See—*
Cillario, Renzo, 4,298,625, Cl. 426-572.000.
Pacifici, Joseph A.; and White, Jerry L., to West Point Pepperell, Inc. Device for applying foam to textiles. 4,297,860, Cl. 68-200.000.
Paddock, Stephen W.; and Tershak, Andrew T., to Whirlpool Corporation. Temperature sensing circuit with high noise immunity. 4,297,851, Cl. 62-126.000.
Page, Enno H., to NL Industries, Inc. Method of die casting utilizing expendable sand cores. 4,298,051, Cl. 164-72.000.
Palemon Camu, Oscar M. Marine rescue capsule. 4,297,757, Cl. 9-4.00R.
Palinkas, Bernard. Golf alignment device. 4,298,201, Cl. 273-183.00B.
Palitex Project Company GmbH: *See—*
Franzen, Gustav, 4,297,834, Cl. 57-58.860.
Palovcik, John, to Rockwell International Corporation. Method for making an axle spindle. 4,298,155, Cl. 228-114.000.
Panavision, Incorporated: *See—*
Gottschalk, Robert E.; and Navarro, Felipe, 4,298,149, Cl. 224-201.000.
Gottschalk, Robert E., 4,298,255, Cl. 352-85.000.
Panikov, Nikolai N.: *See—*
Anikeev, Yakov F.; Panikov, Nikolai N.; and Ripny, Viktor N., 4,297,886, Cl. 73-642.000.
Panlmatic Company: *See—*
Gartner, William J.; and Henke, Harry R., 4,298,467, Cl. 210-96.100.
Pape, Heinz: *See—*
Quella, Ferdinand; and Pape, Heinz, 4,298,802, Cl. 250-484.000.
Papp, Alfred: *See—*
Aulich, Hubert; and Papp, Alfred, 4,298,245, Cl. 350-96.290.

Parikh, Indu; and Cuatrecasas, Pedro, to Burroughs Wellcome Co. Diagnostic reagent. 4,298,685, Cl. 435-7.000.
Parkinson, Thomas M.; Brown, Joseph P.; and Wingard, Robert E., Jr., to Dynapol. Pharmaceutical preparations containing a polymeric agent for releasing 5-aminosalicylic acid or its salts into the gastrointestinal tract. 4,298,595, Cl. 424-78.000.
Parks, Leon C., to Research Against Cancer, Inc. Systemic hyperthermia with improved temperature sensing apparatus and method. 4,298,006, Cl. 128-399.000.
Parslow, Michael W.; and Sime, Stuart J., to Lever Brothers Company. Shampoo. 4,298,494, Cl. 252-174.160.
Paruzzolo, Antonio: *See—*
Bozzo, Gian M.; Gava, Paolo; and Paruzzolo, Antonio, 4,298,295, Cl. 405-52.000.
Pasero, Riccardo: *See—*
Lagana', Vincenzo; and Pasero, Riccardo, 4,298,041, Cl. 141-392.000.
Passavant-Werke Michelbacher Huette: *See—*
Keller, Egon; and Kreutz, Peter, 4,298,359, Cl. 55-269.000.
Pasternak, Stephen F., to Peerless of America, Inc. Heat exchangers and method of making same. 4,298,062, Cl. 165-181.000.
Pate, Paul E.: *See—*
Sugalski, Raymond K.; Hooke, John W.; and Pate, Paul E., 4,298,662, Cl. 429-50.000.
Patent-Treuhand-Gesellschaft fur elektrische Gluhlampen mbH: *See—*
Krieg, Rudolf, 4,298,909, Cl. 362-18.000.
Paton, Boris E.; Kudinov, Vladimir M.; Volgin, Leonid A.; Petushkov, Vladimir G.; Bushtedt, Jury P.; Koroteev, Anatoly Y.; and Kotov, Viktor A. Extended shaped charge and method of making same. 4,297,946, Cl. 102-307.000.
Patrick, Dennis J.: *See—*
Winsor, Jack O.; and Patrick, Dennis J., 4,298,076, Cl. 173-164.000.
Pawloski, Chester E., to Dow Chemical Company, The. Heterocyclic substituted triazolyl phosphorous compounds and their use as insecticides. 4,298,602, Cl. 424-200.000.
Pawloski, Chester E.: *See—*
Ginter, Sally P.; Pawloski, Chester E.; and Stevens, Violete L., 4,298,709, Cl. 521-169.000.
Paynter, Gerald C.: *See—*
Birch, Stanley F.; Lawler, John A.; and Paynter, Gerald C., 4,298,089, Cl. 181-213.000.
Pearson, Eugene W.; and Short, Wilbur G., to Canron Corp. Hydraulic press with integral knockout and stroke control. 4,297,870, Cl. 72-443.000.
Peerless Manufacturing Company: *See—*
Sillers, Donald A., Jr., 4,298,474, Cl. 210-238.000.
Peerless of America, Inc.: *See—*
Pasternak, Stephen F., 4,298,062, Cl. 165-181.000.
Pellerin, Andrew P.; and Theophile, Christ, to Microwave Antenna Systems and Technology Inc. Double ridge waveguide rotary joint. 4,298,850, Cl. 333-257.000.
Pellet, Regis J.; Gradassi, Michael J.; and Bertolacini, Ralph J., to Standard Oil Company (Indiana). Catalyst and process. 4,298,461, Cl. 208-139.000.
Peltola, Waino. Rotary delimber for timber harvester. 4,298,042, Cl. 144-2.00Z.
Pendlebury, David: *See—*
Stables, Wilbur L.; Pendlebury, David; and Weiss, William R., 4,298,153, Cl. 226-97.000.
Pennington, Reginald A.: *See—*
Counselor, Gary D.; Gerst, Robert C.; and Pennington, Reginald A., 4,298,049, Cl. 164-30.000.
Pennwalt Corporation: *See—*
Sandler, Stanley R., 4,298,517, Cl. 260-31.8HA.
Perego, Ambrogio: *See—*
Fried, Reinhard; Mayer, Andreas; and Perego, Ambrogio, 4,298,028, Cl. 137-868.000.
Perkins, Geoffrey W., to Motorola Inc. Automatic peak beam current leveler system. 4,298,886, Cl. 358-74.000.
Pernic, Stanley J., to Baxter Travenol Laboratories, Inc. Degassing system. 4,298,357, Cl. 55-165.000.
Perrot, Rene: *See—*
Kucza, Jean-Claude; Mastrot, Albert; Perrot, Rene; and Wattier, Jean-Mary, 4,297,777, Cl. 29-420.000.
Perry, Forbes G. deB., to National Research Development Corporation. Control systems for steplessly-variable ratio transmissions. 4,297,918, Cl. 74-690.000.
Perry, Jack I.: *See—*
Mumford, Eustace H.; and Perry, Jack I., 4,298,373, Cl. 65-260.000.
Peternel, Jacob R.: *See—*
Decker, Forrest W.; and Peternel, Jacob R., 4,298,790, Cl. 235-92.0SB.
Peters, Alan W.: *See—*
Banta, Frederick; Milstein, Donald; and Peters, Alan W., 4,298,458, Cl. 208-112.000.
Peters, Franz-Josef: *See—*
Krenzer, Paul; Peters, Franz-Josef; Schlusnus, Karl-Heinz; and Wahl, Hans J., 4,298,785, Cl. 219-124.340.
Peters, John. Detachable roller skate with rear brake. 4,298,209, Cl. 280-11.200.
Peters, Lyle R. Building structures having improved fire resistant properties. 4,297,821, Cl. 52-317.000.
Peterson, Charles J. Time-controlled device for preventing pouring of stale coffee from flasks. 4,298,143, Cl. 222-70.000.
Peterson, Gary A.: *See—*
Clark, Rodney L.; Kidder, Kenneth B.; and Peterson, Gary A., 4,298,334, Cl. 431-24.000.
Peterson, Harold J., to Farmers Pride Cheese, Inc. Method of making cheese having zones of different characteristics. 4,298,618, Cl. 426-36.000.
Peterson, Robert B.: *See—*
LeBlanc, Joseph R.; and Peterson, Robert B., 4,298,589, Cl. 423-359.000.
Petro, James: *See—*
Hollenbeck, Arthur; and Petro, James, 4,298,136, Cl. 221-1.000.
Petroff, Nicole: *See—*
Durand, Jean-Pierre; and Petroff, Nicole, 4,298,472, Cl. 210-198.200.
Petrolite Corporation: *See—*
Cheng, William J.; and Guthrie, David B., 4,298,482, Cl. 252-25.000.
Petruck, Gerd-Michael: *See—*
Hagemann, Hermann; Klauke, Erich; and Petruck, Gerd-Michael, 4,298,761, Cl. 568-44.000.
Petry, Charles J.: *See—*
Dompas, John; and Petry, Charles J., 4,298,053, Cl. 164-429.000.
Petts, Nigel J.: *See—*
Bristow, Ian T.; and Petts, Nigel J., 4,298,315, Cl. 417-300.000.
Petushkov, Vladimir G.: *See—*
Paton, Boris E.; Kudinov, Vladimir M.; Volgin, Leonid A.; Petushkov, Vladimir G.; Bushtedt, Jury P.; Koroteev, Anatoly Y.; and Kotov, Viktor A., 4,297,946, Cl. 102-307.000.
Phelps Dodge Corporation: *See—*
Satchell, Donald P., Jr., 4,298,466, Cl. 210-94.000.
Phelps, Edwin H., to Compagnie Internationale Pour l'Informatique Oil-Honeywell Bull (Societe Anonyme). Method for coating cylindrical surfaces. 4,298,634, Cl. 427-183.000.
Philip A. Hunt Chemical Corp.: *See—*
Bulloch, David K.; and Kim, Hong Z., 4,298,681, Cl. 430-466.000.
Philip Morris, Inc.: *See—*
Semp, Bernard A.; Teng, Daniel M.; and Keritsis, Gus D., 4,298,013, Cl. 131-308.000.
Philipp Holzmann Aktiengesellschaft: *See—*
Krabbe, Wilfried, 4,298,230, Cl. 299-33.000.
Phillips, James W.: *See—*
Buchanan, Steven O.; and Phillips, James W., 4,297,889, Cl. 73-747.000.
Phillips Petroleum Co.: *See—*
Campbell, Grover L.; and Hobbs, James W., 4,298,363, Cl. 62-21.000.
Coombs, Daniel M.; and Boesiger, Dwight D., 4,298,456, Cl. 208-86.000.
Fluegel, Dale A., 4,298,939, Cl. 364-421.000.
Lamb, Charles M., III, 4,298,508, Cl. 260-18.00R.
Philp, Sanborn F., to General Electric Company. Compact high voltage shunt reactor. 4,298,853, Cl. 336-83.000.
Phlmann, Hans-Juergen: *See—*
Krauth, Axel; Maier, Horst R.; Phlmann, Hans-Juergen; Foerster, Siegfried; and Kleeman, Manfred, 4,298,059, Cl. 165-166.000.
Pichel Industries, Inc.: *See—*
Headrick, Richard T., 4,298,911, Cl. 362-35.000.
Pickett, John A.: *See—*
Laws, Derek R. J.; Bath, Nigel A.; Ennis, Colin S.; Pickett, John A.; and Wheldon, Alfred G., 4,298,626, Cl. 426-600.000.
Piesinger, Gregory H.: *See—*
Kennedy, Peter D.; and Piesinger, Gregory H., 4,298,871, Cl. 343-100.0SA.
Pietsch, Stephen J.: *See—*
Harper, Jon J.; and Pietsch, Stephen J., 4,298,580, Cl. 423-40.000.
Harper, Jon J.; and Pietsch, Stephen J., 4,298,759, Cl. 562-485.000.
Pinto, Alwyn, to Imperial Chemical Industries Limited. Ammonia production process. 4,298,588, Cl. 423-359.000.
Pioch, Peter P., to Black & Decker Inc. Cutting blade for a rotary lawnmower. 4,297,831, Cl. 56-295.000.
Pirovano, Dante, to Industrie Pirelli S.p.A. Device for applying the elastomeric filler to the bead core of a tire. 4,298,421, Cl. 156-460.000.
Piskorz, Ronald F.: *See—*
Cochran, Jerry R.; Insinger, Thomas H.; Hollenbach, Gerald E.; Piskorz, Ronald F.; and Smith, Addison M., 4,298,765, Cl. 568-754.000.
Pittsburgh-Des Moines Corporation: *See—*
Harper, George C., Jr., 4,297,825, Cl. 52-729.000.
Pizzolitto, Georges: *See—*
Latapie, Jean M.; and Pizzolitto, Georges, 4,298,414, Cl. 156-59.000.
Plant, Aline P., administrator: *See—*
Galleymore, Harry R.; James, Kenneth; Jones, Haydn F.; Bhardwaj, Chaman L.; Plant, James S., deceased; and Plant, Aline P., administrator, 4,298,730, Cl. 536-119.000.
Plant, James S., deceased: *See—*
Galleymore, Harry R.; James, Kenneth; Jones, Haydn F.; Bhardwaj, Chaman L.; Plant, James S., deceased; and Plant, Aline P., administrator, 4,298,730, Cl. 536-119.000.
Plass, Vernon F. Method of manufacturing a grate. 4,298,560, Cl. 264-66.000.
Plastic Research Products, Inc.: *See—*
Horvath, William, 4,298,036, Cl. 141-1.000.
Plath, Peter; Rohr, Wolfgang; Wuerzer, Bruno; and Becker, Rainer, to BASF Aktiengesellschaft. Pyrazole ether derivatives. 4,298,749, Cl. 548-377.000.

Platz, Rolf: *See—*
Broecker, Franz J.; Baur, Karl G.; Platz, Rolf; and Stabenow, Joachim, 4,298,766, Cl. 568-862.000.
Plessey Handel und Investments AG: *See—*
Melling, John R., 4,298,925, Cl. 363-131.000.
Pneumafil Corporation: *See—*
Hocutt, Hovan; and Ford, David M., 4,298,361, Cl. 55-290.000.
Poclain: *See—*
Moro, Christian D.; and Ranini, Daniel G., 4,297,815, Cl. 52-115.000.
Pohan, Kurt, to Leybold-Heraeus GmbH. Fill device. 4,298,040, Cl. 141-115.000.
Poiesz, Gerardus W., to Brinkmnn Eu Niemeyer N.V. Automatic feeding apparatus. 4,297,974, Cl. 119-51.00R.
Poland, Sydney W., to Texas Instruments Incorporated. Electronic calculator system having high order math capability. 4,298,949, Cl. 364-706.000.
Polaroid Corporation: *See—*
Barton, Derek H. R.; Bronstein-Bonte, Irena Y.; and Taylor, Lloyd D., 4,298,676, Cl. 430-221.000.
Friedman, Harvey S., 4,298,267, Cl. 354-304.000.
Land, Edwin H.; Cerankowski, Leon D.; and Mattucci, Neil, 4,298,674, Cl. 430-213.000.
Taylor, Lloyd D., 4,298,675, Cl. 430-213.000.
Poll, Leif W. Pulsed air filter cleaning system. 4,298,360, Cl. 55-273.000.
Pollak-Banda, Erich: *See—*
Bauer, Erwin; Davids, Ralf; Gotz, Gerhard; Jussen, Hilmar; Arndt, Heinrich; Kummel, Louis; Morhart, Rudolf; and Pollak-Banda, Erich, 4,297,917, Cl. 74-665.00G.
Polska Akademia Nauk Instytut Fizyki: *See—*
Bielska-Lewandowska, Halina; Irisova, Natalija; Jung, Grzegorz; Lewandowski, Stanislaw J.; Prohorov, Aleksandr; Sobolewski, Roman; and Vinogradov, Eugenij, 4,298,990, Cl. 455-325.000.
Poly-Glas Systems: *See—*
Hetherington, Robert D., 4,298,017, Cl. 137-1.000.
Pomagalski S.A.: *See—*
Laurent, Roger, 4,297,951, Cl. 104-209.000.
Pontone, Louis J. Reusable wall fastener. 4,298,298, Cl. 411-342.000.
Pontoppidan, Michael, to S.I.B.E. Societe Industrielle de Brevets et d'Etudes. Carburetors for internal combustion engines. 4,298,548, Cl. 261-34.00R.
Porter, Travis G.: *See—*
Butler, G. Theodore; Porter, Travis G.; and Fisher, Harold E., 4,298,337, Cl. 431-285.000.
Post, John E., to Carrier Corporation. Air conditioning system and control therefor. 4,298,164, Cl. 236-49.000.
Potter, Colin G.: *See—*
Warner, Gerald T.; and Potter, Colin G., 4,298,796, Cl. 250-328.000.
Powers, John A.; and Christini, James N., to GTE Products Corporation. Process of preparing lubricating oil additive containing tungsten. 4,298,485, Cl. 252-49.700.
PPG Industries, Inc.: *See—*
Clayton, Carl C., 4,297,847, Cl. 60-641.300.
Decker, Forrest W.; and Peternel, Jacob R., 4,298,790, Cl. 235-92.0SB.
Hammel, Joseph J., 4,298,370, Cl. 65-27.000.
Henery, Vern A., 4,297,971, Cl. 118-719.000.
Maaghul, John, 4,298,653, Cl. 428-378.000.
Savolskis, Edward P.; and Scott, Walter W., 4,298,374, Cl. 65-335.000.
Schimmel, Karl F.; Seiner, Jerome A.; Dowbenko, Rostyslaw; and Christenson, Roger M., 4,298,511, Cl. 260-29.2TN.
Seymour, Samuel L., 4,298,368, Cl. 65-25.200.
Praetorius, Werner: *See—*
Dockner, Toni; Kempe, Uwe; Krug, Herbert; Magnussen, Peter; Praetorius, Werner; and Szymanski, Hans J., 4,298,748, Cl. 548-347.000.
Precision Tool & Machine, Inc.: *See—*
Haydt, Leo A., Jr., 4,298,323, Cl. 425-162.000.
Pressl, Klaus A., to Sohne, Jakob Pressl. Grease gun. 4,298,144, Cl. 222-256.000.
Prevorsek, Dusan C.; and Kwon, Young D., to Allied Corporation. Measuring coefficient of radial damping of tire wall segment. 4,297,878, Cl. 73-146.000.
Price, Robert T., to RJM Industries, Inc. Roller skate wheel with self-contained generator. 4,298,910, Cl. 362-35.000.
Prichard, William W.: *See—*
Lindsey, Richard V., Jr.; and Prichard, William W., 4,298,531, Cl. 260-346.110.
Prier, Donald G.: *See—*
Cook, Frank T.; and Prier, Donald G., 4,298,758, Cl. 560-240.000.
Prime Manufacturing Company: *See—*
Earle, Roland D., 4,298,351, Cl. 44-53.000.
Prior, Herbert E. Convertible trestle leg assembly. 4,298,096, Cl. 182-186.000.
Prior, William C.; and Brown, Keith E., to Kinetico, Inc. Control valve for water softeners. 4,298,025, Cl. 137-624.140.
Pritchett, William C., to Atlantic Richfield Company. Coupling means for horizontal vibrator. 4,298,086, Cl. 181-113.000.
Product Dynamics, Ltd.: *See—*
Bush, Steven C.; and Smathers, Robert E., 4,298,199, Cl. 273-1.0GD.
Prohorov, Aleksandr: *See—*
Bielska-Lewandowska, Halina; Irisova, Natalija; Jung, Grzegorz; Lewandowski, Stanislaw J.; Prohorov, Aleksandr; Sobolewski, Roman; and Vinogradov, Eugenij, 4,298,990, Cl. 455-325.000.
Prokes, Milan: *See—*
Homola, Jaroslav; Remajzl, Karel; and Prokes, Milan, 4,298,882, Cl. 357-38.000.
Prokopov, Igor V.: *See—*
Bochkarev, Ellin P.; Prokopov, Igor V.; Eljutin, Alexandr V.; Belsky, Arkady A.; Baryshnikova, Svetlana M.; Nasyrov, Nail Z.; Novikov, Nikolai A.; Khairulin, Edige R.; Zvyagin, Mikhail S.; Abrjutin, Vladimir N.; Konstantinova, Ljubov I.; Ljubimova, Nina A.; and Gorbacheva, Nedezhda S., 4,298,380, Cl. 75-101.0BE.
Proscia, George E.: *See—*
Katz, Saul N.; and Proscia, George E., 4,298,736, Cl. 544-274.000.
Przybyla, Franciszek J.; and Rossler, Eleanor J., to Duracell International Inc. Method of treating silver oxide powder and the product formed therefrom. 4,298,506, Cl. 252-518.000.
PTX-Pentronix, Inc.: *See—*
DeSantis, Raymond P.; and Puffer, Herbert J., Jr., 4,298,563, Cl. 264-111.000.
Puffer, Herbert J., Jr.: *See—*
DeSantis, Raymond P.; and Puffer, Herbert J., Jr., 4,298,563, Cl. 264-111.000.
Punja, Nazim; and Rathmell, William G., to Imperial Chemical Industries Limited. Fungicidal acylanilide compounds. 4,298,616, Cl. 424-285.000.
Purdue University: *See—*
Whistler, Roy L., 4,298,726, Cl. 536-4.000.
Purea Corporation: *See—*
MacKenzie, Michael C.; and Fischer, Reinhold S., 4,298,312, Cl. 415-118.000.
Putzke, Dwayne H., to CX Corporation. Strip cutter having rotatable cutting blade and strip deflecting means. 4,297,930, Cl. 83-156.000.
Quantel S.A.: *See—*
Michelet, Guy; and Treton, Jean-Pierre, 4,298,247, Cl. 350-295.000.
Quarles, James R. Hairpin cotter key. 4,298,299, Cl. 411-514.000.
Quella, Ferdinand; and Pape, Heinz, to Siemens Aktiengesellschaft. Method and device for collecting light utilizing a light trap. 4,298,802, Cl. 250-484.000.
Rabenecker, Horst: *See—*
Eckstein, Wolfgang; and Rabenecker, Horst, 4,298,010, Cl. 128-719.000.
Racor Industries, Inc.: *See—*
Druffel, James B., 4,298,465, Cl. 210-304.000.
Radek, John R., to Ready Metal Manufacturing Company. Cup dispenser. 4,298,139, Cl. 221-198.000.
Radionov, Valery A.: *See—*
Batalin, Oleg E.; Dykman, Arkady S.; Osadchenko, Alexandr I.; Balkhanova, Galina F.; Belgorodsky, Izrail M.; Nevstruev, Vladimir I.; Radionov, Valery A.; Tulchinsky, Eduard A.; Belyaev, Valentin M.; Smolin, Jury I.; Breiman, Mark I.; Orlyansky, Vitaly V.; Zhirnov, Nikolai Y.; Galibin, Nikolai V.; Troitsky, Adrian P.; and Kovalenko, Vladimir V., 4,298,503, Cl. 252-432.000.
Raffelsiefer, Kurt; Kurth, Herman W.; and Haberle, Fritz, to Arn. Kiekert Soehne and Daimler-Benz Aktiengesellschaft. Door lock, especially for motor vehicle doors. 4,298,223, Cl. 292-216.000.
Ragsdill, David L.: *See—*
Moffet, John N.; Moffet, John D.; and Ragsdill, David L., 4,298,572, Cl. 422-68.000.
Rains, Hettie L. Potato treats. 4,298,627, Cl. 426-637.000.
Ramakrishnan, Rasmasamy: *See—*
Ohlad, Alex G.; Shabtai, Joseph; and Ramakrishnan, Rasmasamy, 4,298,457, Cl. 208-107.000.
Ramos, Joseph A. Electric propulsion system for wheeled vehicles. 4,298,082, Cl. 180-65.00R.
Rampel, Guy, to General Electric Company. Electrode coating composed of copolymers derived from diacetone acrylamide. 4,298,667, Cl. 429-248.000.
Ramunas, Valdas S., to Acme-Cleveland Corporation. Object separator. 4,298,141, Cl. 221-251.000.
Randell, Arthur A., to Coal Industry (Patents) Limited. Method of heat treating a material. 4,298,339, Cl. 432-15.000.
Ranini, Daniel G.: *See—*
Moro, Christian D.; and Ranini, Daniel G., 4,297,815, Cl. 52-115.000.
Ranzen, Carl-Olov B.; and Danielsson, Knut O., to Defibrator Aktiebolag. Method and apparatus for refining lignocellulose-containing material to produce fiber pulp. 4,298,425, Cl. 162-18.000.
Rappas, Alkis S.: *See—*
Douglas, Donald A.; Menashi, Jameel; and Rappas, Alkis S., 4,298,581, Cl. 423-58.000.
Menashi, Jameel; Rappas, Alkis S.; and Douglas, Donald A., 4,298,582, Cl. 423-58.000.
Rasmussen, Chris R., to McNeilab, Inc. N-(Substituted phenyl)-N'-(2-imidazolidinylidene)ureas. 4,298,746, Cl. 548-315.000.
Rasseneur, Laurent: *See—*
Leveque, Jean-Luc; Rasseneur, Laurent; de Rigal, Jean P.; and Gras, Gilbert, 4,297,884, Cl. 73-579.000.
Ratcliffe, Ronald W.: *See—*
Christensen, Burton G.; Guthikonda, Ravindra N.; and Ratcliffe, Ronald W., 4,298,741, Cl. 546-272.000.

Rathbun, Donald J.; and O'Keefe, David B., to Honeywell Information Systems Inc. Digital read recovery with variable frequency compensation using read only memories. 4,298,956, Cl. 364-900.000.
Rathmell, William G.: *See—*
Punja, Nazim; and Rathmell, William G., 4,298,616, Cl. 424-285.000.
Ray-O-Vac Corporation: *See—*
Joshi, Ashok V.; Jatkar, Arun D.; and Sholette, William P., 4,298,664, Cl. 429-191.000.
RCA Corporation: *See—*
Auerbach, Victor, 4,298,982, Cl. 371-30.000.
Credelle, Thomas L.; and Gange, Robert A., 4,298,819, Cl. 313-422.000.
Knight, Peter R., 4,298,830, Cl. 315-411.000.
Luz, David W., 4,298,829, Cl. 315-408.000.
McCandless, Harry E., 4,298,818, Cl. 313-417.000.
Scott, Howard M., 4,298,892, Cl. 358-190.000.
Read, David M., to Minnesota Mining and Manufacturing Company. Steam-formaldehyde sterilization indicator. 4,298,569, Cl. 422-27.000.
Ready Metal Manufacturing Company: *See—*
Radek, John R., 4,298,139, Cl. 221-198.000.
Rebafka, Walter: *See—*
Hahn, Klaus; Hinselmann, Klaus; Halbritter, Klaus; Rebafka, Walter; and Weber, Heinz, 4,298,702, Cl. 521-79.000.
Reclamet, Inc.: *See—*
Dudley, Robert H., 4,298,476, Cl. 210-373.000.
Reddick, Cornelius. Device for rear view vision for spectacles. 4,298,254, Cl. 351-50.000.
Redmond, John D., Jr., to Gates Rubber Company, The. Reinforced belt splice. 4,298,343, Cl. 474-255.000.
Reed, Kingstone L. H., to Koolatron Industries, Inc. Wall mounted thermoelectric refrigerator. 4,297,850, Cl. 62-3.000.
Rees, James D.; Altfather, Kenneth W., Jr.; Lama, William L.; and Ozern, Donna U. Variable density filter for a multi-magnification copying device. 4,298,274, Cl. 355-71.000.
Regalbuto, John A.; and Christopher, Glenn B., to Jet Research Center, Inc. Methods and apparatus for severing conduits. 4,298,063, Cl. 166-55.000.
Rehage, Ted A.: *See—*
Bigelow, George A.; Rehage, Ted A.; and Shook, Frankie S., 4,298,954, Cl. 364-900.000.
Rehner, Helmut; and Rittersdorf, Walter, to Boehringer Mannheim GmbH. Control reagent for test strips for determining urobilinogen in urine. 4,298,498, Cl. 252-408.000.
Reifers, Richard F.; and Lord, Henry A., to Diamond International Corporation. Nestable and denestable molded egg cartons. 4,298,156, Cl. 229-2.50R.
Reiffert, Jurgen: *See—*
Gerhardt, Werner; Wehle, Volker; Syldatk, Andreas; Rogall, Gabriele; Reiffert, Jurgen; and Conrad, Jens, 4,298,568, Cl. 422-16.000.
Remajzl, Karel: *See—*
Homola, Jaroslav; Remajzl, Karel; and Prokes, Milan, 4,298,882, Cl. 357-38.000.
Reneau, Daniel L., to Zenith Radio Corporation. Chroma amplifier and color killer. 4,298,884, Cl. 358-26.000.
Research Against Cancer, Inc.: *See—*
Parks, Leon C., 4,298,006, Cl. 128-399.000.
Research Corporation: *See—*
Doyle, Ronald J.; Keller, Kenneth F.; and Schaefer, Robert L., 4,298,689, Cl. 435-34.000.
Research Foundation of the City University of New York: *See—*
Gafney, Harry D., 4,298,439, Cl. 204-157.10W.
Rheindt, Kurt: *See—*
Grunert, Wolfgang; Huber, Johann; and Rheindt, Kurt, 4,298,184, Cl. 251-357.000.
Rhodia AG: *See—*
Ritschel, Josef, 4,298,303, Cl. 414-401.000.
Rhone-Poulenc Industries: *See—*
Daniel, Jean-Claude; Grossoleil, Jacques; and Roullet, Robert, 4,298,637, Cl. 427-372.200.
Ricci, Giovanni B. Modular prefabricated semi-panels to build inside or bearing walls by means of auxiliary connecting spacers. 4,297,824, Cl. 52-568.000.
Rice, Wayne K.: *See—*
Singh, Laxman; and Rice, Wayne K., 4,298,622, Cl. 426-254.000.
Richardson Chemical Company: *See—*
Greene, Joseph L., 4,298,404, Cl. 148-6.14A.
Richardson, John G.; and Soldat, Robert W., to Envirotronics. Electronic multi-zone timed temperature control apparatus. 4,298,163, Cl. 236-46.00R.
Richardson, Neil G.: *See—*
Limonchik, Abe; and Richardson, Neil G., 4,298,396, Cl. 106-273.00R.
Richardson, William C.: *See—*
Berglund, Neil C.; Kempke, William G.; and Richardson, William C., 4,298,927, Cl. 364-200.000.
Richman, Paul, to Standard Microsystems Corp. Hermetic plastic dual-in-line package for a semiconductor integrated circuit. 4,298,769, Cl. 174-52.0FP.
Richter Gedeon Vegyeszeti Gyar RT: *See—*
Jovanovics, Karola; and Gorog, Sandor, 4,298,525, Cl. 260-244.400.
Richter, Hans. Cycloidic gear. 4,297,920, Cl. 74-804.000.
Richter, Hans. Apparatus for detecting forces directing the movement of a manipulating instrument. 4,298,308, Cl. 414-730.000.
Rickenbacker, James E., to Exxon Production Research Company. Method and apparatus for testing the impedances of geophone channels. 4,298,969, Cl. 367-76.000.
Ricoh Company, Ltd.: *See—*
Kaneko, Yutaka; and Fukuda, Mitsuhisa, 4,298,244, Cl. 350-3.780.
Nakamura, Haruka, 4,298,978, Cl. 370-92.000.
Ridings, Robert P.: *See—*
Dobyns, Thomas R.; Lindstrom, Richard R.; and Ridings, Robert P., 4,298,979, Cl. 370-104.000.
Riedle, Rudolf: *See—*
Schinabeck, Anton; Zeller, Norbert; Lindner, Tassilo; Engelsberger, Georg; and Riedle, Rudolf, 4,298,753, Cl. 556-415.000.
Riehl, Fred, to Robertshaw Controls Company. Pilot burner ignition means and method of making the same. 4,298,336, Cl. 431-264.000.
Rieter Machine Works, Ltd.: *See—*
Fluckiger, Peter; and Schefer, Kurt, 4,298,171, Cl. 242-18.00A.
Rijnders, Willem, to Hunter Douglas International, N.V. Panelled ceiling. 4,297,822, Cl. 52-484.000.
Riker Laboratories, Inc.: *See—*
Scherrer, Robert A.; and Stern, Richard M., 4,298,532, Cl. 260-346.220.
Riley, Richard L.: *See—*
Condouris, George A.; Yelnosky, John; Riley, Richard L.; Won, Chong M.; Douglas, George H.; and Studt, William L., 4,298,608, Cl. 424-249.000.
Riordan, William J.; and Cunha, Richard A., to Walter Kidde and Company, Inc. Fuel burner control apparatus. 4,298,335, Cl. 431-25.000.
Ripny, Viktor N.: *See—*
Anikeev, Yakov F.; Panikov, Nikolai N.; and Ripny, Viktor N., 4,297,886, Cl. 73-642.000.
Ritchie, John G.: *See—*
Thankachan, Chacko; Ritchie, John G.; Sahayada, Eugene; and Sengupta, Asok, 4,298,658, Cl. 428-425.100.
Ritschel, Josef, to Rhodia AG. Device for transporting and storing spools and particularly yarn spools. 4,298,303, Cl. 414-401.000.
Ritter, Allen M.: *See—*
Dinger, Edward H.; and Ritter, Allen M., 4,298,810, Cl. 307-252.00N.
Ritter, Kent E., to Air Preheater Company, Inc., The. Actuated sector plate. 4,298,055, Cl. 165-9.000.
Rittersdorf, Walter: *See—*
Rehner, Helmut; and Rittersdorf, Walter, 4,298,498, Cl. 252-408.000.
Ritzi, Emil W., to Biphase Energy Systems. Two-phase reaction turbine. 4,298,311, Cl. 415-80.000.
RJM Industries, Inc.: *See—*
Price, Robert T., 4,298,910, Cl. 362-35.000.
Robert Bosch GmbH: *See—*
Haubner, Georg; Wesemeyer, Jurgen; and Schrumpf, Hans, 4,298,930, Cl. 364-200.000.
Heitmann, Jurgen, 4,298,896, Cl. 360-11.000.
Roberts, Eugene L., to United States of America, Army. Adaptive steerable null antenna processor. 4,298,873, Cl. 343-100.0SA.
Robertshaw Controls Company: *See—*
Riehl, Fred, 4,298,336, Cl. 431-264.000.
Robertson, John M.: *See—*
Bongers, Piet F.; van Tol, Maurits W.; and Robertson, John M., 4,298,820, Cl. 313-463.000.
Robins, Ronald F.; and Lindre, Jaan, to Ford Motor Company. Brake wear indicator system. 4,298,857, Cl. 340-52.00A.
Robinson, Graham E., to Imperial Chemical Industries Limited. Manufacturing process for preparing disubstituted (N-cyanoimido) carbonates. 4,298,544, Cl. 260-453.0RW.
Roccaforte, Harry I.; and Hanko, Jimmy J., to Champion International Corporation. Carton core retainers. 4,298,123, Cl. 206-396.000.
Rockwell International Corporation: *See—*
Palovcik, John, 4,298,155, Cl. 228-114.000.
Rode, Jonathan P., 4,298,887, Cl. 358-113.000.
Rode, Jonathan P., to Rockwell International Corporation. Nonuniformity correction in a multielement detector array. 4,298,887, Cl. 358-113.000.
Roderick, John J.: *See—*
Allan, John L. H.; Finestone, Arnold B.; and Roderick, John J., 4,298,521, Cl. 260-45.90R.
Rodgers, William E., to Hughes Aircraft Company. Sidelobe blanking system. 4,298,872, Cl. 343-100.0LE.
Rodriguez, Juan G.: *See—*
Mehring, Jeffrey S.; Sayen, Ronald J.; Schara, Robert E.; Stocker, Charles T.; and Rodriguez, Juan G., 4,298,624, Cl. 426-532.000.
Rodriguez, Rudolph. Catapult device and projectile therefore. 4,297,985, Cl. 124-22.000.
Roes, Wilhelmus F. M.: *See—*
Cordes, Johan H.; and Roes, Wilhelmus F. M., 4,298,519, Cl. 260-33.8UA.
Rogall, Gabriele: *See—*
Gerhardt, Werner; Wehle, Volker; Syldatk, Andreas; Rogall, Gabriele; Reiffert, Jurgen; and Conrad, Jens, 4,298,568, Cl. 422-16.000.
Rohm and Haas Company: *See—*
Takase, Kunio, 4,298,700, Cl. 521-32.000.
Rohr, Wolfgang: *See—*
Plath, Peter; Rohr, Wolfgang; Wuerzer, Bruno; and Becker, Rainer, 4,298,749, Cl. 548-377.000.
Rohrig, Adalbert: *See—*
Knell, Bernhard; and Rohrig, Adalbert, 4,298,052, Cl. 164-416.000.

Roland, Magnus A.: *See*—
Grahn, Sven-Ake; Roland, Magnus A.; and Eriksson, Carl L., 4,297,911, Cl. 280-777.000.
Roller, Max F. Roll-up divider. 4,298,048, Cl. 160-243.000.
Rolls-Royce Limited: *See*—
Chapman, John F., 4,298,090, Cl. 181-286.000.
Rolstad, Erik; Korpas, Thor-Harrald; Leyse, Robert H.; and Smith, Robert D., to Scandpower A/S. Apparatus for determining the local power generation rate in a nuclear reactor fuel assembly. 4,298,430, Cl. 376-247.000.
Romanski, John G., to United States of America, Air Force. Method and apparatus for augmenting binary patterns. 4,298,858, Cl. 340-146.3MA.
Ronel, Samuel H.; D'Andrea, Mark J.; Dobelle, William H.; Klomp, Gregory F.; and Hashiguchi, Hiroshi, to National Patent Development Corporation. Porous hydrophilic materials, chambers therefrom, and devices comprising such chambers and biologically active tissue and methods of preparation. 4,298,002, Cl. 128-260.000.
Rooney, Clarence S.: *See*—
Cragoe, Edward J., Jr.; Rooney, Clarence S.; and Williams, Haydn W. R., 4,298,743, Cl. 548-203.000.
Ropp, Walter S.: *See*—
Majewicz, Thomas G.; and Ropp, Walter S., 4,298,728, Cl. 536-96.000.
Rosenberry, George M., Jr.: *See*—
Liebermann, Howard H.; Frischmann, Peter G.; and Rosenberry, George M., Jr., 4,298,659, Cl. 428-592.000.
Rosenthal Technik AG: *See*—
Krauth, Axel; Maier, Horst R.; Phlmann, Hans-Juergen; Foerster, Siegfried; and Kleeman, Manfred, 4,298,059, Cl. 165-166.000.
Ross, David S.; and Blessing, James E., to United States of America, Energy. Alcohols as hydrogen-donor solvents for treatment of coal. 4,298,450, Cl. 208-8.0LE.
Rossler, Eleanor J.: *See*—
Przybyla, Franciszek J.; and Rossler, Eleanor J., 4,298,506, Cl. 252-518.000.
Roth, Karl: *See*—
Sappok, Reinhard; Guellich, Fritz; Roth, Karl; and Wiesenberger, Alois, 4,298,526, Cl. 260-314.500.
Rottmaier, Ludwig: *See*—
Lewalter, Jurgen; Rottmaier, Ludwig; Merten, Rudolf; Zecher, Wilfried; Dunwald, Willi; and Schulte, Bernhard, 4,298,515, Cl. 260-30.40N.
Roullet, Robert: *See*—
Daniel, Jean-Claude; Grossoleil, Jacques; and Roullet, Robert, 4,298,637, Cl. 427-372.200.
Rowe, Don H., to GTE Products Corporation. Voltage regulator with temperature dependent output. 4,298,835, Cl. 323-281.000.
Rozet, Vladimir E.: *See*—
Avdeenko, Boris K.; Bronfman, Aron I.; Vitkin, Alexandr L.; Zelentsov, Boris N.; Kinevsky, Valery N.; and Rozet, Vladimir E., 4,298,900, Cl. 361-127.000.
Rozmus, Walter J., to Kelsey-Hayes Company. Powder dispensing assembly. 4,298,168, Cl. 239-659.000.
Ruark, Bruce L.: *See*—
McCarty, William J.; and Ruark, Bruce L., 4,297,854, Cl. 62-325.000.
McCarty, William J.; and Ruark, Bruce L., 4,297,855, Cl. 62-325.000.
Ruehle, William H., to Mobil Oil Corporation. Removal of surface layer anomaly effects. 4,298,966, Cl. 367-50.000.
Ruehle, William H.; and Hodge, John D., to Mobil Oil Corporation. Digital reflection searching and section plotting. 4,298,968, Cl. 367-59.000.
Ruelle, Gilbert: *See*—
Damiron, Rene; Gillet, Roger; Heuillard, Jean-Francois; and Ruelle, Gilbert, 4,298,812, Cl. 310-61.000.
Rumberger, Earl E.; and Kelly, Frank M., to Aluminum Company of America. Method and apparatus for removing liners from metal closures. 4,297,778, Cl. 29-426.400.
Runyan, Steven R.: *See*—
Irvin, Ronald D.; Runyan, Steven R.; and Sherlock, Hugh P., 4,298,976, Cl. 369-282.000.
Ruschke, Ricky R., to Baxter Travenol Laboratories, Inc. Gas separating and venting filter. 4,298,358, Cl. 55-185.000.
Rusidze, Vazha V.: *See*—
Barbakadze, Dzhondo F.; Mindeli, Mamuka S.; Macharashvili, Petr G.; Rusidze, Vazha V.; and Suladze, Otari N., 4,298,192, Cl. 266-218.000.
Russ, Peter; and Jansen, Heinz, to Deutsche Industrieanlagen GmbH Werk Hermann Kolb Maschinenfabrik Koeln. Machine tool with offset compensation. 4,297,926, Cl. 82-9.000.
Rust, Robert C.: *See*—
Wright, Thomas C.; Hudrlik, Terrence R.; Mills, Perry A.; Rust, Robert C.; and Wallner, Thomas G., 4,298,007, Cl. 128-419.0PG.
Rutsch, Peter W.; and Brehm, Michael, to Carl Freudenberg, Firma. Method for matched die molding a fiber reinforced polyurethane foam molded product. 4,298,556, Cl. 264-46.600.
Ryan, William C., Jr.: *See*—
Hargest, Thomas S., III; and Ryan, William C., Jr., 4,298,001, Cl. 128-247.000.
S.I.B.E. Societe Industrielle de Brevets et d'Etudes: *See*—
Pontoppidan, Michael, 4,298,548, Cl. 261-34.00R.
Saab-Scania Aktiebolag: *See*—
Grahn, Sven-Ake; Roland, Magnus A.; and Eriksson, Carl L., 4,297,911, Cl. 280-777.000.
Sack, Werner, to Jenaer Glaswerk Schott & Gen. Alkali-free sealing glasses for molybdenum. 4,298,388, Cl. 501-15.000.
Saegusa, Takashi, to Nippon Kogaku K.K. Device for driving a display element having a memorizing property. 4,298,870, Cl. 340-785.000.
Safe-T Pacific Company: *See*—
Stanley, Lorne R., 4,298,142, Cl. 221-304.000.
Safetran Systems Corporation: *See*—
Cogdill, William F., 4,298,225, Cl. 294-118.000.
Sagishima, Takayuki: *See*—
Baba, Takaaki; Sagishima, Takayuki; Kitani, Teruo; and Sasaki, Reiichi, 4,298,891, Cl. 358-183.000.
Sahayada, Eugene: *See*—
Thankachan, Chacko; Ritchie, John G.; Sahayada, Eugene; and Sengupta, Asok, 4,298,658, Cl. 428-425.100.
Saiji, Mituhiro: *See*—
Masuzawa, Sigeaki; Saiji, Mituhiro; and Tanimoto, Akira, 4,298,865, Cl. 340-706.000.
Saiki, Yukihiro; Kumazawa, Eitaro; and Ishioka, Yozo, to Snow Brand Milk Products Co., Ltd. Apparatus for supplying materials to belt type continuous vacuum dryer. 4,297,793, Cl. 34-56.000.
St. Anthony Hospital Systems: *See*—
Natitus, Donald P.; and Carlson, Curt T., 4,298,863, Cl. 340-573.000.
St. Georgiev, Vasil: *See*—
Brown, Richard E.; St. Georgiev, Vasil; and Loev, Bernard, 4,298,742, Cl. 548-152.000.
Saito, Junji: *See*—
Uchida, Mitsuo; Oguri, Yasuo; Saito, Junji; and Kawahara, Tsukasa, 4,298,561, Cl. 264-86.000.
Saito, Kouichi: *See*—
Kaneko, Fumihiko; Nitta, Koichi; and Saito, Kouichi, 4,298,120, Cl. 206-329.000.
Saito, Masao; Hosokawa, Motoyuki; Kawakami, Takamasa; and Murayama, Yuko, to Mitsubishi Gas Chemical Company, Inc. Process for producing phthalonitrile. 4,298,545, Cl. 260-465.00H.
Saito, Motoyuki, to Citizen Watch Co., Ltd. Structure for coupling back cover with case band in wrist watch. 4,298,973, Cl. 368-276.000.
Saito, Norio. Composition useful for inhibiting adhesion and propagation of undesirable algae and/or shellfish on articles. 4,297,803, Cl. 43-7.000.
Saito, Shoji; and Nagashima, Mitsuo. Pot lid. 4,298,131, Cl. 220-231.000.
Saito, Toshiaki: *See*—
Hirano, Yutaka; Fukuden, Nobutoshi; and Saito, Toshiaki, 4,298,846, Cl. 333-32.000.
Sakai, Masakado: *See*—
Takagi, Yoshihiro; and Sakai, Masakado, 4,298,677, Cl. 430-244.000.
Sakai, Yutaka: *See*—
Doi, Yoshikazu; Uchida, Takaaki; and Sakai, Yutaka, 4,298,252, Cl. 350-470.000.
Sakamoto, Shinichi: *See*—
Sasayama, Takao; Nishimura, Yutaka; Sakamoto, Shinichi; and Miki, Masayuki, 4,297,881, Cl. 73-204.000.
Sakauye, Randall T.; Marlow, John V.; Laurie, Gordon H.; and Seymour, Theodore J., to Cominco Ltd. Asymmetrical shaping of slit segments of meshes formed in deformable strip. 4,297,866, Cl. 72-186.000.
Sakurada, Shuroku; Nakashima, Yoichi; Kojima, Isao; Yagi, Hideyuki; Kariya, Tadaaki; and Sugiyama, Masayoshi, to Hitachi, Ltd. Semiconductor device with double moat and double channel stoppers. 4,298,881, Cl. 357-38.000.
Sakurai, Hiroshi: *See*—
Tamura, Mitsuhiro; Ohishi, Tetsuo; and Sakurai, Hiroshi, 4,298,522, Cl. 260-45.9QB.
Salters, Roelof H. W.; and Koomen, Joannes J. M., to Signetics Corporation. MOS Voltage divider. 4,298,811, Cl. 307-296.00R.
Salvat, Francois: *See*—
Dupressoir, Albert; and Salvat, Francois, 4,298,878, Cl. 343-795.000.
Samis, James M.; Waechter, Walter C.; and James, Ronald D., to Thermonetics, Inc. Converting animal wastes to useful products. 4,298,621, Cl. 426-55.000.
Sams, Jack G., to International Business Machines Corporation. Serial storage subsystem for a data processor. 4,298,932, Cl. 364-200.000.
Sandler, Stanley R., to Pennwalt Corporation. Tetrahalophthalates as flame retardant plasticizers for halogenated resins. 4,298,517, Cl. 260-31.8HA.
Sandvik Aktiebolag: *See*—
Norlander, Gosta; Vignotto, Angelo; and Micca, Mario, 4,298,079, Cl. 175-339.000.
Ostling, Ingemar K., 4,298,205, Cl. 277-197.000.
Sandvik Conveyor GmbH: *See*—
Kobayashi, Takuo; and Takashima, Yasuyuki, 4,298,117, Cl. 198-367.000.
Sangamo Weston, Inc.: *See*—
Elias, William H., 4,298,906, Cl. 361-433.000.
Sano, Takezo; Inoue, Tadanori; and Uemura, Yukikazu, to Sumitomo Chemical Company, Ltd. Resin original pattern plate and method for transferring relieved pattern thereof to thermoplastic resin material. 4,297,945, Cl. 101-395.000.
Sanyo Chemical Industries, Ltd.: *See*—
Genjida, Fumihide; Kawakatsu, Kunio; and Ii, Motohiko, 4,298,487, Cl. 252-75.000.
Sappok, Reinhard; Guellich, Fritz; Roth, Karl; and Wiesenberger, Alois, to BASF Aktiengesellschaft. Preparation of easily dispersible and deeply colored pigmentary forms. 4,298,526, Cl. 260-314.500.

Sarda, Jean-Paul: *See*—
Colonna, Jean; Fitremann, Jean-Michel; Genin, Richard; and Sarda, Jean-Paul, 4,298,066, Cl. 166-300.000.
Sartoretto, Paul; and Tan, Kak-Yuen, to W. A. Cleary Chemical Corporation. Urea formaldehyde dispersions modified with higher aldehydes. 4,298,512, Cl. 260-29.40R.
Saruta, Masahiro: *See*—
Kimata, Kei; Yasuda, Yoshinobu; Yoshida, Isamu; and Saruta, Masahiro, 4,297,981, Cl. 123-454.000.
Sasaki, Reiichi: *See*—
Baba, Takaaki; Sagishima, Takayuki; Kitani, Teruo; and Sasaki, Reiichi, 4,298,891, Cl. 358-183.000.
Sasaki, Shinichi. Apparatus for measuring a percentage of moisture and weighing of a sheet-like object. 4,297,874, Cl. 73-73.000.
Sasayama, Takao; Nishimura, Yutaka; Sakamoto, Shinichi; and Miki, Masayuki, to Hitachi, Ltd. Hot-wire flow rate measuring apparatus. 4,297,881, Cl. 73-204.000.
Satake, Yoshikatsu: *See*—
Ohya, Masaki; Kobayashi, Akio; Ogiwara, Takeo; and Satake, Yoshikatsu, 4,298,710, Cl. 525-5.000.
Satchell, Donald P., Jr., to Phelps Dodge Corporation. Apparatus and method for visually monitoring an ion exchange fluidized bed. 4,298,466, Cl. 210-94.000.
Sato, Isao; Kato, Fumio; Uchiyama, Yoshihiro; Iizuka, Nobuyuki; and Hata, Tsuneyuki, to Hitachi, Ltd. Combustor of gas turbine with features for vibration reduction and increased cooling. 4,297,843, Cl. 60-39.320.
Sato, Tadashi; and Tanaka, Keiji. Method and device for cleaning photosensitive screen in an image forming apparatus. 4,298,268, Cl. 355-3.0SC.
Sato, Yasuhiro: *See*—
Yoshimaru, Tomohisa; Sato, Yasuhiro; and Yamashita, Mitsuo, 4,298,269, Cl. 355-3.00R.
Satomura, Masato: *See*—
Kubotera, Kikuo; Mizuki, Eiichi; Satomura, Masato; Iwano, Haruhiko; and Fujiwara, Tadahiro, 4,298,673, Cl. 430-204.000.
Sattelmeyer, Richard: *See*—
Teschner, Eckart; Sattelmeyer, Richard; and Hesse, Wolfgang, 4,298,356, Cl. 51-297.000.
Sauer, Gerhard: *See*—
Neef, Gunter; Eder, Ulrich; Haffer, Gregor; and Sauer, Gerhard, 4,298,538, Cl. 260-397.400.
Saus, J. Arthur; and McCartney, Larry P., to Intex Products, Inc. Process for producing iron phosphate coatings at ambient temperature. 4,298,405, Cl. 148-6.15R.
Savolskis, Edward P.; and Scott, Walter W., to PPG Industries, Inc. Apparatus for improving glass melting by perforating batch layer. 4,298,374, Cl. 65-335.000.
Sawada, Yoshio: *See*—
Aoki, Harumi; and Sawada, Yoshio, 4,298,259, Cl. 354-25.000.
Sawano, Hirokazu: *See*—
Takaki, Masaoki; Sawano, Hirokazu; Yamanaka, Kunio; Asada, Kazuyoshi; Hideshima, Keiji; and Koyanagi, Haruo, 4,298,958, Cl. 364-900.000.
Sayen, Ronald J.: *See*—
Mehring, Jeffrey S.; Sayen, Ronald J.; Schara, Robert E.; Stocker, Charles T.; and Rodriguez, Juan G., 4,298,624, Cl. 426-532.000.
Scandpower A/S: *See*—
Rolstad, Erik; Korpas, Thor-Harrald; Leyse, Robert H.; and Smith, Robert D., 4,298,430, Cl. 376-247.000.
Scerbo, Louis J.: *See*—
Montalto, Anthony R.; Scerbo, Louis J.; and Starace, Jeremia P., 4,298,239, Cl. 339-66.00M.
Schachar, Ronald A.; and Levy, Norman S. Surgical method for altering the curvature of the cornea of rabbits. 4,298,004, Cl. 128-305.000.
Schaefer, Robert L.: *See*—
Doyle, Ronald J.; Keller, Kenneth F.; and Schaefer, Robert L., 4,298,689, Cl. 435-34.000.
Schara, Robert E.: *See*—
Mehring, Jeffrey S.; Sayen, Ronald J.; Schara, Robert E.; Stocker, Charles T.; and Rodriguez, Juan G., 4,298,624, Cl. 426-532.000.
Schave, Richard D., to Libbey-Owens-Ford Company. Laser system for aligning conveyor rolls. 4,298,281, Cl. 356-138.000.
Scheepswerf Stapel B.V.: *See*—
Amelink, Joost, 4,298,219, Cl. 285-24.000.
Schefer, Kurt: *See*—
Fluckiger, Peter; and Schefer, Kurt, 4,298,171, Cl. 242-18.00A.
Schenk, Hans-Joachim: *See*—
Ashtheimer, Ludwig; Schenk, Hans-Joachim; and Schwochau, Klaus, 4,298,577, Cl. 423-6.000.
Schering, Aktiengesellschaft: *See*—
Neef, Gunter; Eder, Ulrich; Haffer, Gregor; and Sauer, Gerhard, 4,298,538, Cl. 260-397.400.
Schering Corporation: *See*—
Hammell, Susan B., 4,298,604, Cl. 424-240.000.
Scherrer, Robert A.; and Stern, Richard M., to Riker Laboratories, Inc. 3-Naphthyl benzofurans. 4,298,532, Cl. 260-346.220.
Schieser, Warren J.; and Vickers, Stanley E., to Liqui-Box Corporation. Separator and feeder for a strip of flexible bags. 4,297,929, Cl. 83-110.000.
Schiller, Wolf-Dieter: *See*—
Krull, Walther; Bekaan, Alfred; and Schiller, Wolf-Dieter, 4,298,362, Cl. 55-304.000.
Schimmel, Karl F.; Seiner, Jerome A.; Dowbenko, Rostyslaw; and Christenson, Roger M., to PPG Industries, Inc. Urethane rheology modifiers and compositions containing same. 4,298,511, Cl. 260-29.2TN.
Schinabeck, Anton; Zeller, Norbert; Lindner, Tassilo; Engelsberger, Georg; and Riedle, Rudolf, to Wacker-Chemie GmbH. Continuous process for preparing silanes and siloxanes having SiOC groups. 4,298,753, Cl. 556-415.000.
Schlusnus, Karl-Heinz: *See*—
Krenzer, Paul; Peters, Franz-Josef; Schlusnus, Karl-Heinz; and Wahl, Hans J., 4,298,785, Cl. 219-124.340.
Schmall, Karl-Heinz. Arrangement for measuring the distance between a metallic workpiece and a processing tool. 4,298,784, Cl. 219-124.020.
Schmidt, George F.; and Weber, Robert E., to Kimberly-Clark Corporation. Alkaline battery, electrolyte absorber therefor. 4,298,668, Cl. 429-250.000.
Schmidt, Paul J.; and Hung, William M., to Sterling Drug Inc. Carbonless duplicating and marking systems. 4,298,215, Cl. 282-27.500.
Schmitz, Gerd; and Hintsch, Otto, to Sulzer Brothers Limited. Brake system for a textile machine. 4,298,107, Cl. 192-12.00D.
Schmukler, Seymour: *See*—
Machonis, John, Jr.; Schmukler, Seymour; Zeitlin, Robert J.; and Shida, Mitsuzo, 4,298,712, Cl. 525-74.000.
Schneider, Urban A.; Monley, Robert E.; Nelson, Robert L.; and Glatthorn, Raymond H., to Westinghouse Electric Corp. Deep narrow groove tungsten inert gas shielded welding process. 4,298,783, Cl. 219-75.000.
Schoennagel, Hans-Juergen; and Zahner, John C., to Mobil Oil Corporation. Coal conversion. 4,298,453, Cl. 208-10.000.
Schreck, Carl E.: *See*—
McGovern, Terrence P.; and Schreck, Carl E., 4,298,612, Cl. 424-267.000.
Schrecongost, Ray B., to Marmon Company. Divider keyer circuit for synthesis organ. 4,297,935, Cl. 84-1.010.
Schreiber, Ronald S., to Colgate-Palmolive Company. Method for retarding gelation of bicarbonate-carbonate-silicate crutcher slurries. 4,298,493, Cl. 252-135.000.
Schroeder, Charles F.: *See*—
Froberg, Magnus L.; and Schroeder, Charles F., 4,298,369, Cl. 65-27.000.
Schroeter, Siegfried H.; and Olson, Daniel R., to General Electric Company. Silicone coated abrasion resistant polycarbonate article. 4,298,632, Cl. 427-160.000.
Schrumpf, Hans: *See*—
Haubner, Georg; Wesemeyer, Jurgen; and Schrumpf, Hans, 4,298,930, Cl. 364-200.000.
Schuchardt, Donald W., to Western Electric Company, Incorporated. Metallized resistor and methods of manufacturing and adjusting the resistance of same. 4,298,856, Cl. 338-195.000.
Schulte, Bernhard: *See*—
Lewalter, Jurgen; Rottmaier, Ludwig; Merten, Rudolf; Zecher, Wilfried; Dunwald, Willi; and Schulte, Bernhard, 4,298,515, Cl. 260-30.40N.
Schulze, Heinz; Zimmerman, Robert L.; and Naylor, Carter G., to Texaco Development Corp. Aminated alkoxylated aliphatic alcohol salts as polyisocyanurate catalysts. 4,298,708, Cl. 521-115.000.
Schumacher, John C.; and Lagendijk, Andre, to J. C. Schumacher Co. Method of shipping and using semiconductor liquid source materials. 4,298,037, Cl. 141-1.000.
Schupp, Thomas; Traxler, Peter; and Nuesch, Jakob, to Ciba-Geigy Corporation. Fermentation process for producing a rifamycin derivative. 4,298,692, Cl. 435-119.000.
Schwartz, Albert B.: *See*—
Butter, Stephen A.; Chester, Arthur W.; and Schwartz, Albert B., 4,298,695, Cl. 518-720.000.
Schwarz, Gerd-Ulrich; Kiehs, Karl; Boell, Walter; and Adolphi, Heinrich, to BASF Aktiengesellschaft. Substituted 2,3-dihydrobenzofurylmethyl esters, their use in pest control, and pest control agents containing these compounds. 4,298,615, Cl. 424-285.000.
Schwarz, Josef: *See*—
Kuhnle, Ernst; and Schwarz, Josef, 4,297,875, Cl. 73-862.620.
Schwarz, Otto; Linnau, Yendra; Loblich, Franz; and Seelich, Thomas, to Immuno Aktiengesellschaft fur chemisch-medizinische Produkte. Tissue adhesive. 4,298,598, Cl. 424-101.000.
Schwarz, Richard A.: *See*—
Hergenrother, William L.; Schwarz, Richard A.; Ambrose, Richard J.; and Hayes, Robert A., 4,298,707, Cl. 521-95.000.
Schwehr, Gregory D.: *See*—
Heitman, Christopher J.; and Schwehr, Gregory D., 4,298,801, Cl. 250-447.000.
Schwochau, Klaus: *See*—
Ashtheimer, Ludwig; Schenk, Hans-Joachim; and Schwochau, Klaus, 4,298,577, Cl. 423-6.000.
SCM Corporation: *See*—
Ehmann, William J.; and Johnson, Walter E., Jr., 4,298,762, Cl. 568-433.000.
Scott, Howard M., to RCA Corporation. Switching regulator with independent feedback path filter. 4,298,892, Cl. 358-190.000.
Scott, Walter W.: *See*—
Savolskis, Edward P.; and Scott, Walter W., 4,298,374, Cl. 65-335.000.
Scovill Inc.: *See*—
Gauthier, Henry J., 4,297,954, Cl. 112-104.000.
Sears, Barry; and Yesair, David W., to Arthur D. Little, Inc. Xenobiotic delivery vehicles, method of forming them and method of using them. 4,298,594, Cl. 424-19.000.

Sebulke, Joachim A.: *See*—
Bischoff, Jurgen H.; and Sebulke, Joachim A., 4,298,840, Cl. 324-365.000.
Seelich, Thomas: *See*—
Schwarz, Otto; Linnau, Yendra; Loblich, Franz; and Seelich, Thomas, 4,298,598, Cl. 424-101.000.
Seffens, David E., to H. Jack Flanders Co. Log transport system. 4,298,043, Cl. 144-136.00R.
Segawa, Masahiro: *See*—
Mizuno, Toshiya; Ohta, Mitsuru; and Segawa, Masahiro, 4,298,719, Cl. 526-255.000.
Seidel, Dietrich; Wieland, Heinrich; and Molinari, Ewald, to Immuno Aktiengesellschaft fur chemisch-medizinische Produkte. Method of preserving the electrophoretic properties of lipoproteins. 4,298,441, Cl. 204-180.00G.
Seiko Koki Kabushiki Kaisha: *See*—
Ogihara, Masuo; Chimura, Kozo; Shinozaki, Nobuo; and Seki, Yoichi, 4,298,972, Cl. 368-222.000.
Seiner, Jerome A.: *See*—
Schimmel, Karl F.; Seiner, Jerome A.; Dowbenko, Rostyslaw; and Christenson, Roger M., 4,298,511, Cl. 260-29.2TN.
Seki, Yoichi: *See*—
Ogihara, Masuo; Chimura, Kozo; Shinozaki, Nobuo; and Seki, Yoichi, 4,298,972, Cl. 368-222.000.
Seldeen, Richard. Pistol charging holster. 4,298,150, Cl. 224-243.000.
Sellers, Gregory J.: *See*—
Gregor, John A.; and Sellers, Gregory J., 4,298,862, Cl. 340-572.000.
Semix Incorporated: *See*—
Lindmayer, Joseph, 4,298,423, Cl. 156-616.00R.
Semp, Bernard A.; Teng, Daniel M.; and Keritsis, Gus D., to Philip Morris, Inc. Method for recycling cellulosic waster materials from tobacco product manufacture. 4,298,013, Cl. 131-308.000.
Senco Products, Inc.: *See*—
Baker, Gordon P.; and Warman, Thomas E., 4,298,072, Cl. 173-13.000.
Seney, John S., to Du Pont de Nemours, E. I., and Company. Automatic cover for yarn bulking jet apparatus. 4,297,772, Cl. 28-257.000.
Sengupta, Asok: *See*—
Thankachan, Chacko; Ritchie, John G.; Sahayada, Eugene; and Sengupta, Asok, 4,298,658, Cl. 428-425.100.
Serrell, Peter V.: *See*—
Warnshuis, Paul L., Jr.; and Serrell, Peter V., 4,298,964, Cl. 367-4.000.
Sethofer, Nicholas L., to Timex Corporation. Cyclohexyl-dioxane liquid crystalline compounds. 4,298,528, Cl. 260-340.700.
Settzo, Robert J.: *See*—
Dorfeld, William G.; and Settzo, Robert J., 4,298,505, Cl. 252-513.000.
Seven W Enterprises, Inc.: *See*—
Weder, Donald E., 4,297,811, Cl. 47-72.000.
Severijns, Adrianus P.: *See*—
Staas, Frans A.; van Haeringen, Willem; and Severijns, Adrianus P., 4,297,856, Cl. 62-514.00R.
Severson, Larry A., to Branick Mfg., Inc. Lucking device for curing rims. 4,298,420, Cl. 156-394.00R.
Seybold, R.: *See*—
Evertz, Egon; and Seybold, R., 4,298,180, Cl. 249-135.000.
Seymour, Samuel L., to PPG Industries, Inc. Delivering and aligning glass sheets in a bending station. 4,298,368, Cl. 65-25.200.
Seymour, Theodore J.: *See*—
Sakauye, Randall T.; Marlow, John V.; Laùrie, Gordon H.; and Seymour, Theodore J., 4,297,866, Cl. 72-186.000.
Shabtai, Joseph: *See*—
Oblad, Alex G.; Shabtai, Joseph; and Ramakrishnan, Rasmasamy, 4,298,457, Cl. 208-107.000.
Shamp, Donald E.: *See*—
Stover, K. Lawrence; Bueno, Alejandro G.; Miller, James W.; and Shamp, Donald E., 4,298,372, Cl. 65-136.000.
Shannon, E. Paul. Rate of turn indicator. 4,297,883, Cl. 73-504.000.
Shapiro, Gerald N., to Analogic Corporation. Array Processor. 4,298,936, Cl. 364-200.000.
Sharp Kabushiki Kaisha: *See*—
Masuzawa, Sigeaki; Saiji, Mituhiro; and Tanimoto, Akira, 4,298,865, Cl. 340-706.000.
Shaver, Marvin B.; Vadas, Robert M.; and Stock, Norman A., to Dominion Engineering Works Limited. Drive system for grinding mills. 4,298,113, Cl. 192-0.094.
Shaw, Edward W. Sewing apparatus. 4,297,955, Cl. 112-121.150.
Shawhan, E. Neil; Vela, Octavio A.; and Smither, Miles A., to Sperry-Sun, Inc. Borehole acoustic telemetry system synchronous detector. 4,298,970, Cl. 367-82.000.
Shell Internationale Research Maatschappij B.V.: *See*—
Bischoff, Jurgen H.; and Sebulke, Joachim A., 4,298,840, Cl. 324-365.000.
Shell Oil Company: *See*—
Van Berkel, Johannes; and Kelderman, Hendrik C., 4,298,757, Cl. 560-231.000.
Verbrugge, Pieter A.; and Kramer, Petrus A., 4,298,756, Cl. 560-231.000.
Youn, Kun C.; and Wilpers, Dale J., 4,298,540, Cl. 260-412.400.
Shemitz, Sylvan R. Lighting system with baffle. 4,298,916, Cl. 362-127.000.
Sherlock, Hugh P.: *See*—
Irvin, Ronald D.; Runyan, Steven R.; and Sherlock, Hugh P., 4,298,976, Cl. 369-282.000.
Sherman, Charles J.: *See*—
Griffith, Gary L.; and Sherman, Charles J., 4,298,237, Cl. 339-17.00L.
Sherman, Donald R.: *See*—
Curchod, Donald B.; and Sherman, Donald R., 4,297,882, Cl. 73-460.000.
Shibata, Fujio: *See*—
Mikura, Chiho; and Shibata, Fujio, 4,298,631, Cl. 427-130.000.
Shichijo, Hajime; Yamamoto, Kenji; and Nakazawa, Kenichi, to Sony Corporation. Presettable tuning apparatus. 4,298,851, Cl. 334-11.000.
Shida, Mitsuzo: *See*—
Machonis, John, Jr.; Schmukler, Seymour; Zeitlin, Robert J.; and Shida, Mitsuzo, 4,298,712, Cl. 525-74.000.
Shigeta, Yoshihiro: *See*—
Kawamura, Masaharu; Shigeta, Yoshihiro; Uchidoi, Masanori; Sugiura, Yoji; and Yamamoto, Hiroshi, 4,298,256, Cl. 354-23.00D.
Shimada, Kiyohiro: *See*—
Mutai, Masahiko; Mada, Mitsuo; and Shimada, Kiyohiro, 4,298,619, Cl. 426-43.000.
Shimada, Toshiro: *See*—
Terada, Sachio; Suhara, Akito; Shimada, Toshiro; Nakamura, Takashi; Hujii, Kunizo; and Nakahira, Nobuichi, 4,298,424, Cl. 156-668.000.
Shimizu, Akira: *See*—
Tsuda, Hiroshi; Miyashita, Kiyoshi; Nishikawa, Masaji; Shimizu, Akira; and Kasuga, Muneo, 4,298,270, Cl. 355-3.0SH.
Shimizu, Kunitoshi; Takamura, Masakazu; and Iwasa, Toshio, to Asahi Kasei Kogyo Kabushiki Kaisha. Extremely fine acrylic polymer fiber pile fabric and process for producing the same. 4,298,644, Cl. 428-91.000.
Shimizu, Mituo. Synthetic strings. 4,297,835, Cl. 57-251.000.
Shimokawa, Yoshiyuki; and Tanimoto, Itaru, to Tokyo Shibaura Denki Kabushiki Kaisha. Data-processing device including means to suppress the execution of unnecessary instructions. 4,298,933, Cl. 364-200.000.
Shimp, Alan B.: *See*—
Maier, Alfred E.; Shimp, Alan B.; and Uram, David J., 4,298,852, Cl. 335-6.000.
Shimp, Richard L., to ComSonics, Inc. Split-band redundant amplifier system. 4,298,844, Cl. 330-124.00D.
Shinagawa Refractories Co., Ltd.: *See*—
Hayase, Masahiro; Sugimoto, Hiroyuki; and Takemoto, Mitsuteru, 4,298,391, Cl. 501-89.000.
Shindo, Minoru: *See*—
Oi, Nobuhiro; Aoki, Bunya; Shinozaki, Teizo; Moro, Kanji; Matsunaga, Isao; Noto, Takao; Nebashi, Toshiyuki; Harada, Yusuke; Endo, Hisao; Kimura, Takao; Okazaki, Hiroshi; Ogawa, Haruki; and Shindo, Minoru, 4,298,605, Cl. 424-246.000.
Shinoda, Masaichi: *See*—
Nozaki, Takao; Ito, Takashi; Arakawa, Hideki; Ishikawa, Hajime; and Shinoda, Masaichi, 4,298,629, Cl. 427-39.000.
Shinozaki, Fumiaki; Washigawa, Yasuo; Ikeda, Tomoaki; Nakao, Sho; and Kondoh, Syunichi, to Fuji Photo Film Co., Ltd. Light-sensitive composition. 4,298,679, Cl. 430-281.000.
Shinozaki, Nobuo: *See*—
Ogihara, Masuo; Chimura, Kozo; Shinozaki, Nobuo; and Seki, Yoichi, 4,298,972, Cl. 368-222.000.
Shinozaki, Teizo: *See*—
Oi, Nobuhiro; Aoki, Bunya; Shinozaki, Teizo; Moro, Kanji; Matsunaga, Isao; Noto, Takao; Nebashi, Toshiyuki; Harada, Yusuke; Endo, Hisao; Kimura, Takao; Okazaki, Hiroshi; Ogawa, Haruki; and Shindo, Minoru, 4,298,605, Cl. 424-246.000.
Shirahata, Kunikatsu: *See*—
Iida, Takao; Shirahata, Kunikatsu; Ishii, Shinzo; Okachi, Ryo; and Nara, Takashi, 4,298,690, Cl. 435-80.000.
Shitamori, Mamoru, to Kawasaki Jukogyo Kabushiki Kaisha. Lock for a stand of a two-wheeled vehicle. 4,298,211, Cl. 280-297.000.
Shoketsu Kinzoku Kogyo Kabushiki Kaisha: *See*—
Kukuminato, Tetsuo, 4,298,220, Cl. 285-178.000.
Sholette, William P.: *See*—
Joshi, Ashok V.; Jatkar, Arun D.; and Sholette, William P., 4,298,664, Cl. 429-191.000.
Shook, Frankie S.: *See*—
Bigelow, George A.; Rehage, Ted A.; and Shook, Frankie S., 4,298,934, Cl. 364-900.000.
Short, Wilbur G.: *See*—
Pearson, Eugene W.; and Short, Wilbur G., 4,297,870, Cl. 72-443.000.
Showa Denko K.K.: *See*—
Iwasaki, Hirokazu; and Takahashi, Hideo, 4,298,530, Cl. 260-343.30R.
Shy, Min C. Easily foldaway stand. 4,297,953, Cl. 108-131.000.
Siegel, Hardo: *See*—
Degner, Dieter; Siegel, Hardo; and Hannebaum, Heinz, 4,298,438, Cl. 204-78.000.
Siemenas-Albis AG: *See*—
Burianek, Rudolf; and Tschannen, Gottfried, 4,298,889, Cl. 358-148.000.
Siemens Aktiengesellschaft: *See*—
Aulich, Hubert; and Papp, Alfred, 4,298,245, Cl. 350-96.290.
Fischer, Rudolf, 4,298,934, Cl. 364-200.000.
Hok, Bertil, 4,297,890, Cl. 73-753.000.
Koslar, Manfred, 4,298,837, Cl. 324-72.500.
Quella, Ferdinand; and Pape, Heinz, 4,298,802, Cl. 250-484.000.

Siemens Gammasonics, Inc.: *See*—
Stoub, Everett W.; Colsher, James G.; and Muehllehner, Gerd, 4,298,944, Cl. 364-515.000.
Signetics Corporation: *See*—
Salters, Roelof H. W.; and Koomen, Joannes J. M., 4,298,811, Cl. 307-296.00R.
Sikdar, Subhas K., to Occidental Research Corp. Recovery of hydrofluoric acid from fluosilicic acid. 4,298,586, Cl. 423-339.000.
Siller, Vinzenz. Apparatus for the continuous hardening of pump casings. 4,298,189, Cl. 266-123.000.
Sillers, Donald A., Jr., to Peerless Manufacturing Company. Multiple filter vessel. 4,298,474, Cl. 210-238.000.
Silver, Elizabeth J. Rocking toy. 4,298,196, Cl. 272-52.000.
Silverberg, Morton, to Xerox Corporation. Grooved vacuum belt document handling system. 4,298,277, Cl. 355-76.000.
Silvestri, George J., Jr., to Westinghouse Electric Corp. Method of optimizing the efficiency of a steam turbine power plant. 4,297,848, Cl. 60-660.000.
Simala, John J.: *See*—
Mendola, Charles F., 4,298,232, Cl. 299-64.000.
Sime, Stuart J.: *See*—
Parslow, Michael W.; and Sime, Stuart J., 4,298,494, Cl. 252-174.160.
Sims, Anson: *See*—
Jones, Lawrence T.; Sims, Anson; Howden, Ashley G.; Knighton, Mark S.; and Kingsbury, LC James, 4,298,788, Cl. 219-386.000.
Sindermann, Siegmar: *See*—
Knabe, Uwe; Sindermann, Siegmar; and Jordan, Heinrich, 4,298,039, Cl. 141-90.000.
Singer Company, The: *See*—
Acker, Robert H.; Wessling, William C.; Brand, Arnold J.; and Naydan, Bob N., 4,298,832, Cl. 318-318.000.
Adams, Kenneth D., 4,297,958, Cl. 112-220.000.
Hoeffken, Russell W., 4,298,061, Cl. 163-170.000.
Ketterer, Stanley J., 4,297,957, Cl. 112-184.000.
Singer, Gilbert L. Board game using movable transparent overlay. 4,298,202, Cl. 273-247.000.
Singh, Laxman; and Rice, Wayne K., to Vitamins, Inc. Method for producing wheat germ lipid products. 4,298,622, Cl. 426-254.000.
Sittig, Roland, to BBC, Brown, Boveri & Co., Ltd. Power thyristor and method of fabrication therefore utilizing control, generating, and firing gates. 4,298,880, Cl. 357-38.000.
Sjoholm, Johan E. P.: *See*—
Kihlberg, Yngve R.; and Sjoholm, Johan E. P., 4,298,057, Cl. 165-159.000.
Skelton, John: *See*—
Davis, Robert B.; Skelton, John; Clark, Richard E.; and Swanson, Wilbur M., 4,297,749, Cl. 3-1.500.
Skibinski, Orland E.: *See*—
Bullock, Ralph; and Skibinski, Orland E., 4,297,817, Cl. 52-169.600.
Skov, Allan, to Haldor Topsoe A/S. Process and a plant for preparing a gas rich in methane. 4,298,694, Cl. 518-704.000.
Slabik, Angela: *See*—
Becker, Manfred; Slabik, Angela; Mucke, Bruno; Moisar, Erik; and von Rintelen, Harald, 4,298,683, Cl. 430-569.000.
Slater, David H.: *See*—
Munday, George; Slater, David H.; Tyley, Leonard R. T.; Berenblut, Brian J.; and Whitehouse, Harry B., 4,298,955, Cl. 364-900.000.
Sletten, Carlyle J., to Solar Energy Technology, Inc. Offset-fed multibeam tracking antenna system utilizing especially shaped reflector surfaces. 4,298,877, Cl. 343-781.0CA.
Smathers, Robert E.: *See*—
Bush, Steven C.; and Smathers, Robert E., 4,298,199, Cl. 273-1.0GD.
Smith, Addison M.: *See*—
Cochran, Jerry R.; Insinger, Thomas H.; Hollenbach, Gerald E.; Piskorz, Ronald F.; and Smith, Addison M., 4,298,765, Cl. 568-734.000.
Smith International, Inc.: *See*—
Emery, Maurice M., 4,298,077, Cl. 175-65.000.
Smith, John W.: *See*—
Edwards, John W.; and Smith, John W., 4,298,833, Cl. 318-561.000.
McCarter, Louis N., III; Deemer, W. Robert; Meeker, Robert G.; Weaver, Harry B.; and Smith, John W., 4,298,287, Cl. 366-4.000.
Smith, Michael R.: *See*—
DiFulvio, Anthony P.; and Smith, Michael R., 4,298,571, Cl. 422-65.000.
Smith, Robert D.: *See*—
Rolstad, Erik; Korpas, Thor-Harrald; Leyse, Robert H.; and Smith, Robert D., 4,298,430, Cl. 376-247.000.
Smith, William, to Steel Company of Canada, Ltd., The. Metal strip downcoilers. 4,297,865, Cl. 72-146.000.
Smith, Winthrop W., Jr., to Westinghouse Electric Corp. Multipoint pipeline processor for computing the discrete fourier transform. 4,298,950, Cl. 364-726.000.
Smither, Miles A.: *See*—
Shawhan, E. Neil; Vela, Octavio A.; and Smither, Miles A., 4,298,970, Cl. 367-82.000.
Smolin, Jury I.: *See*—
Batalin, Oleg E.; Dykman, Arkady S.; Osadchenko, Alexandr I.; Balkhanova, Galina F.; Belgorodsky, Izrail M.; Nevstruev, Vladimir I.; Radionov, Valery A.; Tulchinsky, Eduard A.; Belyaev, Valentin M.; Smolin, Jury I.; Breiman, Mark I.; Orlyansky, Vitaly V.; Zhirnov, Nikolai Y.; Galibin, Nikolai V.; Troitsky, Adrian P.; and Kovalenko, Vladimir V., 4,298,503, Cl. 252-432.000.
Snamprogetti S.p.A.: *See*—
Lagana', Vincenzo; and Pasero, Riccardo, 4,298,041, Cl. 141-392.000.
Snary, David, to Burroughs Wellcome Co. *Trypanosoma cruzi* glycoprotein vaccine for inducing immunity to Chagas' disease. 4,298,596, Cl. 424-88.000.
Snavely, Benjamin H., to Sperry Corporation. Shear bar for forage harvesters or the like. 4,298,170, Cl. 241-222.000.
Snitzer, Elias; and Meltz, Gerald, to United Technologies Corporation. Fiber optic hot spot detector. 4,298,794, Cl. 250-227.000.
Snow Brand Milk Products Co., Ltd.: *See*—
Saiki, Yokihiro; Kumazawa, Eitaro; and Ishioka, Yozo, 4,297,793, Cl. 34-56.000.
Sobolewski, Roman: *See*—
Bielska-Lewandowska, Halina; Irisova, Natalija; Jung, Grzegorz; Lewandowski, Stanislaw J.; Prohorov, Aleksandr; Sobolewski, Roman; and Vinogradov, Eugenij, 4,298,990, Cl. 455-325.000.
Societa' Pneumatici Pirelli: *See*—
Gallizia, Achille, 4,298,321, Cl. 425-120.000.
Societe Anonyme SICMA - Societe Industrielle: *See*—
Marechal, Robert, 4,297,912, Cl. 74-501.00R.
Societe Chimique des Charbonnages-CdF Chimie: *See*—
Machon, Jean-Pierre, 4,298,717, Cl. 526-124.000.
Societe Nationale d'etude et de Construction de Moteurs d'Aviation: *See*—
Halin, Yves R.; and LeLandais, Jacques R. A., 4,297,844, Cl. 60-226.00A.
Societe Nationale Industrielle Aerospatiale: *See*—
Euler, August H. L.; and Beziac, Gilbert F. A., 4,298,417, Cl. 156-228.000.
Sodickson, Lester A.; and Lim, Franklin, to Damon Corporation. Method and apparatus for chemical spot test analysis. 4,298,345, Cl. 23-230.00R.
Soerensen, Kai O.: *See*—
Krogsrud, Jens C.; and Soerensen, Kai O., 4,298,921, Cl. 362-346.000.
Soffge, Friedhelm; and Weigele, Hans, to Dr. Ing. h.c.F. Porsche AG. Floating bridge. 4,297,759, Cl. 14-2.600.
Sohne, Jakob Pressl: *See*—
Pressl, Klaus A., 4,298,144, Cl. 222-256.000.
Solar Energy Technology, Inc.: *See*—
Sletten, Carlyle J., 4,298,877, Cl. 343-781.0CA.
Soldat, Robert W.: *See*—
Richardson, John G.; and Soldat, Robert W., 4,298,163, Cl. 236-46.00R.
Solf, Bernhard: *See*—
Makosch, Geunter; and Solf, Bernhard, 4,298,283, Cl. 356-351.000.
Solovieff, Paul G. Lock mechanism with removable cylinder bolder. 4,297,862, Cl. 70-129.000.
Someno, Noboru; Komatsubara, Michimasa; and Toyoshima, Masakatsu, to Sony Corporation. Tuning apparatus. 4,298,989, Cl. 455-183.000.
Somet Societa Meccanica Tessile S.p.A.: *See*—
Viscardi, Ettore, 4,298,034, Cl. 139-453.000.
Sommer, Gerd R.: *See*—
Sterki, Armin; and Sommer, Gerd R., 4,297,788, Cl. 33-179.50R.
Sommerfeld, Eugene G.; and Noyes, Paul R., to Du Pont de Nemours, E. I., and Company. Branched polyesters for adhesives and coating compositions. 4,298,724, Cl. 528-302.000.
Son, Pyong-Nae: *See*—
Lai, John T.; and Son, Pyong-Nae, 4,298,737, Cl. 544-360.000.
Sondermann, Siegfried. Motor vehicle ignition-starter switch. 4,298,776, Cl. 200-11.00C.
Sonerud, John T., to Soneruds Maskin Aktiebolag. Apparatus for digging post holes and erecting posts. 4,297,799, Cl. 37-2.00R.
Soneruds Maskin Aktiebolag: *See*—
Sonerud, John T., 4,297,799, Cl. 37-2.00R.
Sony Corporation: *See*—
Okada, Takashi, 4,298,885, Cl. 358-39.000.
Shichijo, Hajime; Yamamoto, Kenji; and Nakazawa, Kenichi, 4,298,851, Cl. 334-11.000.
Someno, Noboru; Komatsubara, Michimasa; and Toyoshima, Masakatsu, 4,298,989, Cl. 455-183.000.
Soodak, Charles: *See*—
Weng, Cheng L.; Soodak, Charles; and Lohr, David, 4,298,938, Cl. 364-413.000.
Soulier, Joel, to Isobox-Barbier. Apparatus for molding particulate expandable thermoplastic resin material using microwave heating. 4,298,324, Cl. 425-174.80E.
Spahrkas, Heinrich: *See*—
Knopf, Herbert; Spahrkas, Heinrich; and Luck, Wolfhard, 4,298,344, Cl. 8-94.260.
Specht, Steven J.; and Kircher, Morton S., to Olin Corporation. Automatic tightener/loosener for intercell electrical connectors. 4,297,923, Cl. 81-57.410.
Spence, Adam M.; and Goff, James R. Apparatus for use in underground long wall mine workings. 4,298,231, Cl. 299-50.000.
Spence, James R., to Standard Oil Company (Indiana). Anti-static additives. 4,298,353, Cl. 44-71.000.
Sperry Corporation: *See*—
Snavely, Benjamin H., 4,298,170, Cl. 241-222.000.
Sperry-Sun, Inc.: *See*—
Shawhan, E. Neil; Vela, Octavio A.; and Smither, Miles A., 4,298,970, Cl. 367-82.000.

Spooner, James A.: *See—*
James, Robin H.; and Spooner, James A., 4,298,495, Cl. 252-643.000.
Spurgeon, John R. Electronic display apparatus. 4,298,868, Cl. 340-755.000.
Squirrell, Anton F., to Grovag Grossventiltechnik A.G. Bearing system for isolators. 4,298,235, Cl. 308-26.000.
Srivastava, Gopal K.: *See—*
Lai, Stephen; and Srivastava, Gopal K., 4,298,890, Cl. 358-158.000.
Staab, Heinz; and Ippen, Joachim, to Basf Aktiengesellschaft. Cyclically substituted fulvalenophanes. 4,298,751, Cl. 549-11.000.
Staas, Frans A.; van Haeringen, Willem; and Severijns, Adrianus P., to U.S. Philips Corporation. ^{3}He-^{4}He Dilution refrigerator. 4,297,856, Cl. 62-514.00R.
Stabenow, Joachim: *See—*
Broecker, Franz J.; Baur, Karl G.; Platz, Rolf; and Stabenow, Joachim, 4,298,766, Cl. 568-862.000.
Stables, Harry C., to Glaxo Group Limited. Crystallization process. 4,298,732, Cl. 544-20.000.
Stables, Wilbur L.; Pendlebury, David; and Weiss, William R., to Allied Corporation. Interfloor tube aspirator inlet muffler. 4,298,153, Cl. 226-97.000.
Stahl, Karl-Heinz; Fend, Fritz; and Stahl, Werner, to Stahl, Karl-Heinz. Mist generator. 4,298,167, Cl. 239-129.000.
Stahl, Reinhard, to Volkswagenwerk AG. Force measuring hub. 4,297,877, Cl. 73-146.000.
Stahl, Werner: *See—*
Stahl, Karl-Heinz; Fend, Fritz; and Stahl, Werner, 4,298,167, Cl. 239-129.000.
Stallings, Billy G. Sewage septic system with liquid flow drainage control. 4,298,470, Cl. 210-170.000.
Standard Microsystems Corp.: *See—*
Richman, Paul, 4,298,769, Cl. 174-52.0FP.
Standard Oil Company: *See—*
Hardman, Harley F.; and Beach, Ronald I., 4,298,354, Cl. 44-56.000.
Standard Oil Company (Indiana): *See—*
Britch, James A., 4,298,218, Cl. 285-3.000.
Harper, Jon J.; and Pietsch, Stephen J., 4,298,580, Cl. 423-40.000.
Harper, Jon J.; and Pietsch, Stephen J., 4,298,759, Cl. 562-485.000.
Pellet, Regis J.; Gradassi, Michael J.; and Bertolacini, Ralph J., 4,298,461, Cl. 208-139.000.
Spence, James R., 4,298,353, Cl. 44-71.000.
Tatterson, David F.; and Ford, William D., 4,298,459, Cl. 208-120.000.
Stanley, Lorne R., to Safe-T Pacific Company. Article holder and dispenser including adjustable dispensing means and one-way discharge opening. 4,298,142, Cl. 221-304.000.
Starace, Jeremia P.: *See—*
Montalto, Anthony R.; Scerbo, Louis J.; and Starace, Jeremia P., 4,298,239, Cl. 339-66.00M.
State of Israel Ministry of Agriculture: *See—*
Alper, Yekutiel; Elkin, Itzhak; Wolf, Itzhak; Mihai, Gabriel; and Antler, Aharon, 4,297,832, Cl. 56-328.00R.
Stattel, Raymond J.; and Niswander, James K., to United States of America, Administrator, National Aeronautics and Space Administration. Memory-based frame synchronizer. 4,298,987, Cl. 375-106.000.
Staudinger, Gernot, to Voest-Alpine AG. Method for the gasification of coal. 4,298,355, Cl. 48-206.000.
Steeb, Jorg: *See—*
Claussen, Nils; and Steeb, Jorg, 4,298,385, Cl. 501-105.000.
Steel Company of Canada, Ltd., The: *See—*
Smith, William, 4,297,865, Cl. 72-146.000.
Steel Heddle Manufacturing Co.: *See—*
Kaufmann, Frank H.; and Kramer, Charles F., 4,298,032, Cl. 139-207.000.
Stella, Leo, to Torrington Company, The. Lube plug. 4,298,098, Cl. 184-105.00B.
Stempin, John L.; and Wexell, Dale R., to Corning Glass Works. Method for producing large metallic glass bodies. 4,298,382, Cl. 75-202.000.
Stempin, John L.: *See—*
Flannery, James E.; Stempin, John L.; and Wexell, Dale R., 4,298,390, Cl. 501-32.000.
Stephens, Leonard W., to Lane, Perry M. Ratchet wrench. 4,297,924, Cl. 81-59.100.
Sterki, Armin; and Sommer, Gerd R., to Maag- Zahnrader & Maschinen AG. Gear testing machine. 4,297,788, Cl. 33-179.50R.
Sterling Drug Inc.: *See—*
Lesher, George Y.; and Dickinson, William B., 4,298,609, Cl. 424-250.000.
Schmidt, Paul J.; and Hung, William M., 4,298,215, Cl. 282-27.500.
Stern, Richard M.: *See—*
Scherrer, Robert A.; and Stern, Richard M., 4,298,532, Cl. 260-346.220.
Stevens, Violete L.: *See—*
Ginter, Sally P.; Pawloski, Chester E.; and Stevens, Violete L., 4,298,709, Cl. 521-169.000.
Stievenart, Emile F.; and Deconinck, Hugo F., to AGFA-Gevaert N.V. Daylight reprographic camera. 4,298,272, Cl. 355-28.000.
Stirtz, Ronald H.; and Dellinger, Bill. Shoe with three-dimensionally transmitting shock-absorbing mechanism. 4,297,796, Cl. 36-28.000.
Stock, Norman A.: *See—*
Shaver, Marvin B.; Vadas, Robert M.; and Stock, Norman A., 4,298,113, Cl. 392-0.094.
Stocker, Charles T.: *See—*
Mehring, Jeffrey S.; Sayen, Ronald J.; Schara, Robert E.; Stocker, Charles T.; and Rodriguez, Juan G., 4,298,624, Cl. 426-532.000.
Stoltz, Woodrow W. Pipe carrying carts. 4,298,309, Cl. 414-745.000.
Storandt, Ralf, to Vereinigte Baubeschlagfabriken Gretsch & Co. GmbH. Ski safety binding of the diagonal release type. 4,298,213, Cl. 280-628.000.
Stoub, Everett W.; Colsher, James G.; and Muehllehner, Gerd, to Siemens Gammasonics, Inc. Distortion correction method and apparatus for scintillation cameras. 4,298,944, Cl. 364-515.000.
Stover, K. Lawrence; Bueno, Alejandro G.; Miller, James W.; and Shamp, Donald E., to Libbey-Owens-Ford Company. Combustion air flow control for regenerators. 4,298,372, Cl. 65-136.000.
Strand, Jerome E.: *See—*
Thill, Gary A.; and Strand, Jerome E., 4,298,000, Cl. 128-218.00A.
Strikis, Guntis V., to Ford Motor Company. Power steering pump. 4,298,316, Cl. 417-310.000.
Strong, Munro L. Collapsible sawhorse. 4,298,094, Cl. 182-155.000.
Stroup, John F.; Nypaver, Leonard P.; and Eberst, Dale S., to Van Dorn Company. Tonnage indicator for toggle press. 4,297,901, Cl. 73-862.530.
Stubenrauch, Gerd: *See—*
Hamprecht, Gerhard; Stubenrauch, Gerd; Urbach, Hans; and Wuerzer, Bruno, 4,298,731, Cl. 544-11.000.
Studt, William L.: *See—*
Coudouris, George A.; Yelnosky, John; Riley, Richard L.; Won, Chong M.; Douglas, George H.; and Studt, William L., 4,298,608, Cl. 424-249.000.
Stuke, Josef: *See—*
Kassel, Karl-Heinz; Lutz, Manfred; Stuke, Josef; and Walsdorfer, Hubert, 4,298,671, Cl. 430-128.000.
Stull, Morton. Childproof, snap-on, twist-off safety cap and container. 4,298,129, Cl. 215-224.000.
Su, Tsung-Tsan: *See—*
Chang, Ching-Te; and Su, Tsung-Tsan, 4,298,603, Cl. 424-230.000.
Sugalski, Raymond K.; Hooke, John W.; and Pate, Paul E., to General Electric Company. Resealable vent valve for containers such as batteries. 4,298,662, Cl. 429-50.000.
Sugaya, Kiyoshi: *See—*
Konno, Kazuhiko; Goh, Atsushi; and Sugaya, Kiyoshi, 4,298,740, Cl. 546-226.000.
Sugaya, Yoshio: *See—*
Asawa, Tatsuro; Miyake, Haruhisa; Yamashita, Masami; and Sugaya, Yoshio, 4,298,699, Cl. 521-31.000.
Sugimoto, Hiroyuki: *See—*
Hayase, Masahiro; Sugimoto, Hiroyuki; and Takemoto, Mitsuteru, 4,298,391, Cl. 501-89.000.
Sugimoto, Kenji: *See—*
Ishizuka, Shinichi; and Sugimoto, Kenji, 4,297,925, Cl. 82-2.00R.
Sugiura, Muneharu; Minoura, Kazuo; and Minami, Setsuo, to Canon Kabushiki Kaisha. Scanning and projecting device. 4,298,271, Cl. 355-8.000.
Sugiura, Yoji: *See—*
Kawamura, Masaharu; Shigeta, Yoshihiro; Uchidoi, Masanori; Sugiura, Yoji; and Yamamoto, Hiroshi, 4,298,256, Cl. 354-23.00D.
Sugiyama, Masayoshi: *See—*
Sakurada, Shuroku; Nakashima, Yoichi; Kojima, Isao; Yagi, Hideyuki; Kariya, Tadaaki; and Sugiyama, Masayoshi, 4,298,881, Cl. 357-38.000.
Suhara, Akito: *See—*
Terada, Sachio; Suhara, Akito; Shimada, Toshiro; Nakamura, Takashi; Hujii, Kunizo; and Nakahira, Nobuichi, 4,298,424, Cl. 156-668.000.
Suladze, Otari N.: *See—*
Barbakadze, Dzhondo F.; Mindeli, Mamuka S.; Macharashvili, Petr G.; Rusidze, Vazha V.; and Suladze, Otari N., 4,298,192, Cl. 266-218.000.
Sullivan, Roger M., to O'Brien, Leo K.; and Carney, Thomas B. Aircraft collison avoidance system. 4,298,875, Cl. 343-112.0CA.
Sulzer Brothers Limited: *See—*
Schmitz, Gerd; and Hintsch, Otto, 4,298,107, Cl. 192-12.00D.
Sumitomo Chemical Company, Ltd.: *See—*
Sano, Takezo; Inoue, Tadanori; and Uemura, Yukikazu, 4,297,945, Cl. 101-395.000.
Sunbeam Plastics Corporation: *See—*
Montgomery, Gary V., 4,298,146, Cl. 222-536.000.
Sundermeyer, Frank D.; and Calcasola, Richard W., to United Technologies Corporation. Digital information transfer system (DITS) receiver. 4,298,959, Cl. 364-900.000.
Surgeonics Limited: *See—*
McKinley, Milton A., 4,298,165, Cl. 237-8.00R.
Susa, Ermanno: *See—*
Mayr, Adolfo; Galli, Paolo; Susa, Ermanno; Di Drusco, Giovanni; and Giachetti, Ettore, 4,298,718, Cl. 526-125.000.
Suss, Hans G.; and Kiml, Jiri, to Inventio AG. Switching apparatus for a group of elevators or the like. 4,298,100, Cl. 187-29.00R.
Sutton, Ernest S.: *See—*
Biddle, Richard A.; Vriesen, Calvin W.; and Sutton, Ernest S., 4,298,412, Cl. 149-19.500.
Suzuka, Teruo: *See—*
Fujimori, Kuniaki; Suzuka, Teruo; Inoue, Yukio; and Aizawa, Shirou, 4,298,460, Cl. 208-121.000.
Suzuki, Hiroyuki: *See—*
Takamura, Yoshio; Abe, Soichiro; Nakamura, Noboru; and Suzuki, Hiroyuki, 4,298,894, Cl. 358-229.000.

Suzuki, Isao: *See—*
Arai, Yoshio; Kataoka, Hiroyuki; Suzuki, Isao; and Yokota, Shozo, 4,298,895, Cl. 358-284.000.
Suzuki, Keizo; Okudaira, Sadayuki; Nishimatsu, Shigeru; and Kanomata, Ichiro, to Hitachi, Ltd. Dry etching apparatus. 4,298,419, Cl. 156-345.000.
Suzuki, Kuzuhiko; Fujiki, Yasuhiro; Kitahori, Tojiro; and Takada, Akira, to Kanzaki Paper Mfg. Co., Ltd. Method of producing medium-grade coated paper for rotogravure printing. 4,298,652, Cl. 428-323.000.
Suzuki, Yukio, to Tokyo Shibaura Denki Kabushiki Kaisha. Microwave heating apparatus with resistive heaters. 4,298,780, Cl. 219-10.55B.
Sved, Alan F.: *See—*
Fernstrom, John D.; and Sved, Alan F., 4,298,611, Cl. 424-261.000.
Swanson, Wilbur M.: *See—*
Davis, Robert B.; Skelton, John; Clark, Richard E.; and Swanson, Wilbur M., 4,297,749, Cl. 3-1.500.
Sweeney, Lawrence J., to Franklin Steel Company. Drive means for traffic delineator. 4,298,075, Cl. 173-129.000.
Sweeney, Lawrence J., to Franklin Steel Company. Traffic delineator. 4,298,292, Cl. 404-10.000.
Sweetheart Plastics, Inc.: *See—*
Davis, Paul, 4,298,133, Cl. 220-306.000.
Swengel, Robert C., Jr.; Fortuna, Jon A.; and Defibaugh, George R., to AMP Incorporated. Pre-insulated flag-type terminal. 4,298,243, Cl. 339-276.00F.
Swiss Aluminium Ltd.: *See—*
Dantzig, Jonathan A.; and Tyler, Derek E., 4,298,187, Cl. 266-217.000.
Switlik Parachute Company, Inc.: *See—*
Moran, Harold J., 4,297,758, Cl. 9-340.000.
Syldatk, Andreas: *See—*
Gerhardt, Werner; Weble, Volker; Syldatk, Andreas; Rogall, Gabriele; Reiffert, Jurgen; and Conrad, Jens, 4,298,568, Cl. 422-16.000.
System Concepts, Inc.: *See—*
Craig, Philip V. C., 4,298,867, Cl. 340-728.000.
Szabo, Ferenc: *See—*
Nagy, Ferenc; Szabo, Ferenc; and Szucs, Zoltan F., 4,297,892, Cl. 73-826.000.
Szekely, Andrew G., to Union Carbide Corporation. Vortex reactor and method for adding solids to molten metal therewith. 4,298,377, Cl. 75-53.000.
Szucs, Zoltan F.: *See—*
Nagy, Ferenc; Szabo, Ferenc; and Szucs, Zoltan F., 4,297,892, Cl. 73-826.000.
Szymanski, Hans J.: *See—*
Dockner, Toni; Kempe, Uwe; Krug, Herbert; Magnussen, Peter; Praetorius, Werner; and Szymanski, Hans J., 4,298,748, Cl. 548-347.000.
Tachiuchi, Tsuguji; Hirahata, Shigeru; and Takezawa, Teruhiro, to Hitachi, Ltd. Character pattern display system. 4,298,931, Cl. 364-200.000.
Tadokoro, Tomio; and Horie, Tatsuro, to Hitachi, Ltd. Slipping detector system for vehicles. 4,298,940, Cl. 364-426.000.
Tagnon, Luc A., to Essilor International, "Cie Generale d'Optique". Method and apparatus for presenting test images at different distances from a subject. 4,298,253, Cl. 351-17.000.
Taiana, Peter: *See—*
Melton, Keith; Mercier, Olivier; and Taiana, Peter, 4,297,779, Cl. 29-446.000.
Tajima, Hatsuo; Hosono, Nagao; and Kanbe, Junichiro, to Canon Kabushiki Kaisha. Developing apparatus. 4,297,970, Cl. 118-652.000.
Takada, Akira: *See—*
Suzuki, Kuzuhiko; Fujiki, Yasuhiro; Kitahori, Tojiro; and Takada, Akira, 4,298,652, Cl. 428-323.000.
Takagi, Sadaaki. Method and apparatus for the manufacture of a locked material of filament. 4,298,418, Cl. 156-296.000.
Takagi, Yoshihiro; and Sakai, Masakado, to Fuji Photo Film Co., Ltd. Diffusion transfer photographic process. 4,298,677, Cl. 430-244.000.
Takahashi, Akira: *See—*
Kubo, Kazuhiko; Takahashi, Akira; and Oohashi, Kenichi, 4,298,386, Cl. 501-80.000.
Takahashi, Hideo: *See—*
Iwasaki, Hirokazu; and Takahashi, Hideo, 4,298,530, Cl. 260-343.30R.
Takahashi, Kazuo: *See—*
Morinaka, Yasuhiro; and Takahashi, Kazuo, 4,298,610, Cl. 424-256.000.
Takahashi, Kihei; Terada, Seiko; and Nakada, Kiyoshi, to Yoshida Kogyo, K.K. Weft tensioning device. 4,298,033, Cl. 139-450.000.
Takahashi, Masayuki: *See—*
Minagawa, Motonobu; Nakahara, Yutaka; and Takahashi, Masayuki, 4,298,520, Cl. 260-45.80R.
Takahashi, Saeko: *See—*
Amano, Shoichi; Miyadoh, Shinji; Takahashi, Saeko; Ezaki, Norio; Niwa, Tomizo; and Yamada, Yujiro, 4,298,599, Cl. 424-119.000.
Takahashi, Satoshi: *See—*
Komatsu, Shigeru; Takahashi, Satoshi; and Wakatsuki, Masao, 4,298,883, Cl. 357-72.000.
Takahashi, Shinkichi: *See—*
Marushima, Giichi; Tanaka, Hiroshi; Tosaka, Umi; Takahashi, Shinkichi; and Komiyu, Takao, 4,298,669, Cl. 430-55.000.
Takaki, Masaoki; Sawano, Hirokazu; Yamanaka, Kunio; Asada, Kazuyoshi; Hideshima, Keiji; and Koyanagi, Haruo, to Hitachi, Ltd.; and Nissan Motor Co., Ltd. Sequence control system. 4,298,958, Cl. 364-900.000.
Takamatsu, Takashi: *See—*
Tsuchiya, Shunji; and Takamatsu, Takashi, 4,298,318, Cl. 418-61.00B.
Takamura, Masakazu: *See—*
Shimizu, Kunitoshi; Takamura, Masakazu; and Iwasa, Toshio, 4,298,644, Cl. 428-91.000.
Takamura, Yoshio; Abe, Soichiro; Nakamura, Noboru; and Suzuki, Hiroyuki, to Tokyo Shibaura Denki Kabushiki Kaisha. Image pick-up tube. 4,298,894, Cl. 358-229.000.
Takanashi, Yukio; and Higuchi, Toshiharu, to Tokyo Shibaura Denki Kabushiki Kaisha. Directly heated type cathode assembly. 4,298,814, Cl. 313-302.000.
Takano, Yoshinori: *See—*
Tanizaki, Yoshiharu; Minagawa, Kenichiro; and Takano, Yoshinori, 4,298,488, Cl. 252-78.100.
Takase, Kunio, to Rohm and Haas Company. Crosslinked basic polymer and preparation thereof. 4,298,700, Cl. 521-32.000.
Takase, Tsutomu: *See—*
Yamazaki, Noboru; Takase, Tsutomu; Morimoto, Yoshio; and Yuasa, Teruo, 4,298,720, Cl. 526-262.000.
Takashima, Yasuyuki: *See—*
Kobayashi, Takuo; and Takashima, Yasuyuki, 4,298,117, Cl. 198-367.000.
Takasugi, Hisashi: *See—*
Ueda, Ikuo; Takaya, Takao; Kobayashi, Masakazu; Masugi, Takashi; Takasugi, Hisashi; Kochi, Hiromu; and Kitaguchi, Tadashi, 4,298,529, Cl. 260-340.90R.
Takaya, Takao: *See—*
Ueda, Ikuo; Takaya, Takao; Kobayashi, Masakazu; Masugi, Takashi; Takasugi, Hisashi; Kochi, Hiromu; and Kitaguchi, Tadashi, 4,298,529, Cl. 260-340.90R.
Takayama, Syuichi, to Olympus Optical Company Ltd. Apparatus for endoscopic photography. 4,298,260, Cl. 354-50.000.
Takeda Chemical Industries, Ltd.: *See—*
Higashide, Eiji; Tanida, Seiichi; Muroi, Masayuki; and Asai, Mitsuko, 4,298,600, Cl. 424-120.000.
Ito, Homu, 4,298,346, Cl. 23-230.00B.
Moriya, Koji; and Furuoya, Itsuo, 4,298,533, Cl. 260-346.750.
Natsugari, Hideaki; Mikami, Iwao; and Ochiai, Michihiko, 4,298,607, Cl. 424-246.000.
Ochiai, Michihiko; Okada, Taiiti; Aki, Osami; Morimoto, Akira; Kawakita, Kenji; and Matsushita, Yoshihiro, 4,298,606, Cl. 424-246.000.
Takemoto, Mitsuteru: *See—*
Hayase, Masahiro; Sugimoto, Hiroyuki; and Takemoto, Mitsuteru, 4,298,391, Cl. 501-89.000.
Takemura, Kazuo H.: *See—*
Dauben, William G.; Kessel, Carl R.; and Takemura, Kazuo H., 4,298,752, Cl. 549-42.000.
Takeshita, Toru: *See—*
Nishikawa, Osamu; Ishimaru, Kenji; Takeshita, Toru; and Tsuruta, Hideki, 4,298,537, Cl. 260-397.200.
Takeuchi, Eiichi: *See—*
Ohashi, Tetsro; Kitamura, Osamu; Fujii, Hiromu; Mineyuki, Seizo; and Takeuchi, Eiichi, 4,298,050, Cl. 164-468.000.
Takeuchi, Tsugio; Tsuge, Shitu; Hirata, Yukio; and Mochizuki, Koichi, to Japan Spectroscopic Co. Ltd. Method and apparatus for introducing samples to a mass spectrometer. 4,298,795, Cl. 250-282.000.
Takezawa, Teruhiro: *See—*
Tachiuchi, Tsuguji; Hirahata, Shigeru; and Takezawa, Teruhiro, 4,298,931, Cl. 364-200.000.
Taki Industries Co., Ltd.: *See—*
Takigawa, Seiichi, 4,298,767, Cl. 13-25.000.
Takigawa, Seiichi, to Taki Industries Co., Ltd. Support for a heating element in an electric furnace. 4,298,767, Cl. 13-25.000.
Tallberg, Nils: *See—*
Olin, Henry; Tallberg, Nils; and Varis, Martti, 4,297,751, Cl. 4-431.000.
Talres Development (N.A.) N.V.: *See—*
Galleymore, Harry R.; James, Kenneth; Jones, Haydn F.; Bhardwaj, Chaman L.; Plant, James S., deceased; and Plant, Aline P., administrator, 4,298,730, Cl. 536-119.000.
Tamaru, Munetaka: *See—*
Watanabe, Minoru; Kume, Kazunari; Ohno, Hideshi; and Tamaru, Munetaka, 4,297,838, Cl. 368-76.000.
Tamori, Michitoshi: *See—*
Kawai, Kazuo; Yanagidaira, Hidetaka; and Tamori, Michitoshi, 4,298,983, Cl. 375-12.000.
Tamura, Hiroshi; and Nakaie, Yutaka, to Tokyo Shibaura Denki Kabushiki Kaisha. Intrabox temperature display device. 4,298,947, Cl. 364-557.000.
Tamura, Mitsuhiro; Ohishi, Tetsuo; and Sakurai, Hiroshi, to Nippon Zeon Co. Ltd. Diphenylamine derivatives and degradation inhibitors for rubber polymers. 4,298,522, Cl. 260-45.9QB.
Tamura, Takashi: *See—*
Katakura, Hiroshi; and Tamura, Takashi, 4,298,278, Cl. 355-85.000.
Tanaka, Etsuo; and Kato, Hirouobu, to Nippon Kogaku K.K. Light-intercepting device in a camera. 4,298,265, Cl. 354-246.000.
Tanaka, Hiroshi: *See—*
Marushima, Giichi; Tanaka, Hiroshi; Tosaka, Umi; Takahashi, Shinkichi; and Komiyu, Takao, 4,298,669, Cl. 430-55.000.
Tanaka, Keiji: *See—*
Sato, Tadashi; and Tanaka, Keiji, 4,298,268, Cl. 355-3.0SC.

Tanaka, Yoshihiro: *See*—

Matsuda, Motonobu; Matsui, Tohru; and Tanaka, Yoshihiro, 4,298,258, Cl. 354-25.000.

Tanida, Seiichi: *See*—

Higashide, Eiji; Tanida, Seiichi; Muroi, Masayuki; and Asai, Mitsuko, 4,298,600, Cl. 424-120.000.

Taniguchi, Kazuhiro: *See*—

Ando, Masato; Yamamoto, Kenji; and Taniguchi, Kazuhiro, 4,298,446, Cl. 204-224.00R.

Tanimoto, Akira: *See*—

Masuzawa, Sigeaki; Saiji, Mituhiro; and Tanimoto, Akira, 4,298,865, Cl. 340-706.000.

Tanimoto, Itaru: *See*—

Shimokawa, Yoshiyuki; and Tanimoto, Itaru, 4,298,933, Cl. 364-200.000.

Tanizaki, Yoshiharu; Minagawa, Kenichiro; and Takano, Yoshinori, to Nippon Oil and Fats Co., Ltd. Hydraulic fluid composition containing glycol ethers and borate ester. 4,298,488, Cl. 252-78.100.

Tannenbaum, Robin M.: *See*—

Gluck, Lewis; and Tannenbaum, Robin M., 4,298,920, Cl. 362-281.000.

Tao, Kak-Yuen: *See*—

Sartoretto, Paul; and Tao, Kak-Yuen, 4,298,512, Cl. 260-29.40R.

Tardivon, Marcel P.: *See*—

Dejob, Roger M.; and Tardivon, Marcel P., 4,298,963, Cl. 367-4.000.

Taskier, Henry T., to Celanese Corporation. Coated open-celled microporous membranes. 4,298,666, Cl. 429-206.000.

Tate & Lyle Limited: *See*—

Williams, Alan G.; Lawson, Christopher J.; and Wimpenny, Julian W. T., 4,298,725, Cl. 536-1.000.

Tatsuno, Kimio: *See*—

Tsunoda, Yoshito; Tatsuno, Kimio; Miyauchi, Toshimitsu; Aiki, Kunio; and Ito, Ryoichi, 4,298,974, Cl. 369-45.000.

Tatterson, David F.; and Ford, William D., to Standard Oil Company (Indiana). Fluid catalytic cracking of heavy petroleum fractions. 4,298,459, Cl. 208-120.000.

Taylor, Barry E., to Du Pont de Nemours, E. I., and Company. Flux treated solder powder composition. 4,298,407, Cl. 148-24.000.

Taylor, Lloyd D., to Polaroid Corporation. Novel polymeric mordants for photographic dyes. 4,298,675, Cl. 430-213.000.

Taylor, Lloyd D.: *See*—

Barton, Derek H. R.; Bronstein-Bonte, Irena Y.; and Taylor, Lloyd D., 4,298,676, Cl. 430-221.000.

Taylor, Lynn J.; and Grier, John D., to Owens-Illinois, Inc. Composition of matter. 4,298,516, Cl. 260-31.80R.

TDK Electronics Co., Ltd.: *See*—

Mikura, Chiho; and Shibata, Fujio, 4,298,631, Cl. 427-130.000.

Teare, John W. Method and apparatus for producing concrete panels. 4,298,413, Cl. 156-42.000.

Technicare Corporation: *See*—

Mezrich, Reuben S.; Vilkomerson, David H. R.; and Gardineer, Bayard, 4,298,009, Cl. 128-660.000.

Technutra, S.A.: *See*—

Howard, Alan N., 4,298,601, Cl. 424-128.000.

Tecnomare S.p.A.: *See*—

Bozzo, Gian M.; Gava, Paolo; and Paruzzolo, Antonio, 4,298,295, Cl. 405-52.000.

Teijin Limited: *See*—

Nishikawa, Osamu; Ishimaru, Kenji; Takeshita, Toru; and Tsuruta, Hideki, 4,298,537, Cl. 260-397.200.

Tell, Benjamin: *See*—

Boyd, Gary D.; Mohapatra, Sarat K.; Tell, Benjamin; Wagner, Sigurd; and Wudl, Fred, 4,298,250, Cl. 330-357.000.

Tellerman, Jacob, to Temposonics, Incorporated. Integrated ultrasonic magnetic encoder. 4,298,861, Cl. 340-365.00L.

Tellus Machinery Corporation: *See*—

Hainline, Truman D., 4,297,940, Cl. 98-33.00R.

Temple, Davis L., Jr., to Mead Johnson & Company. Diazaheterocyclopurines and triazolopyrimidines. 4,298,734, Cl. 544-251.000.

Temple, Lowell D. Method for connecting sewer pipes to manholes or other pipes. 4,297,780, Cl. 29-451.000.

Temposonics, Incorporated: *See*—

Tellerman, Jacob, 4,298,861, Cl. 340-365.00L.

Teng, Daniel M.: *See*—

Semp, Bernard A.; Teng, Daniel M.; and Keritsis, Gus D., 4,298,013, Cl. 131-308.000.

Tenneco Chemicals, Inc.: *See*—

Clarke, David B., 4,298,481, Cl. 252-21.000.

Terada, Sachio; Suhara, Akito; Shimada, Toshiro; Nakamura, Takashi; Hujii, Kunizo; and Nakahira, Nobuichi, to VBE Industries, Ltd. Method for etching polyamide shaped articles. 4,298,424, Cl. 156-668.000.

Terada, Seiko: *See*—

Takahashi, Kihei; Terada, Seiko; and Nakada, Kiyoshi, 4,298,033, Cl. 139-450.000.

Terashima, Masahiko: *See*—

Nagata, Toshiyuki; Terashima, Masahiko; and Mashima, Kazuto, 4,298,628, Cl. 426-656.000.

Terouanne, Beatrice: *See*—

Nicolas, Jean C.; Terouanne, Beatrice; Descomps, Bernard; and De Paulet, Andre C., 4,298,686, Cl. 435-7.000.

Tershak, Andrew T.: *See*—

Paddock, Stephen W.; and Tershak, Andrew T., 4,297,851, Cl. 62-126.000.

Teschner, Eckart; Sattelmeyer, Richard; and Hesse, Wolfgang, to Hoechst Aktiengesellschaft. Process for the manufacture of abrasives. 4,298,356, Cl. 51-297.000.

Texaco Development Corporation: *See*—

Hunter, Walter D., 4,298,479, Cl. 252-8.55D.

Schulze, Heinz; Zimmerman, Robert L.; and Naylor, Carter G., 4,298,708, Cl. 521-115.000.

Texaco Inc.: *See*—

Dorawala, Tansukhlal G.; and Kerr, Edwin R., 4,298,452, Cl. 208-8.0LE.

Huang, Wann-Sheng, 4,298,455, Cl. 208-48.0AA.

Texas Instruments Incorporated: *See*—

Hartsell, Glenn A.; and Bilek, F. Thomas, 4,298,946, Cl. 364-557.000.

Poland, Sydney W., 4,298,949, Cl. 364-706.000.

Textron Inc.: *See*—

Earl, T. Desmond, 4,298,175, Cl. 244-13.000.

Thankachan, Chacko; Ritchie, John O.; Sahayada, Eugene; and Sengupta, Asok, to J.G.L. Chemicals Ltd. Vapor permeation curable coatings based on alkyd resins. 4,298,658, Cl. 428-425.100.

Thayer, Paul G., to Westinghouse Electric Corp. Hermetic compressor having a valve to drain liquid accumulations from its cylinder head. 4,298,314, Cl. 417-299.000.

Theeuwes, Felix; and Cortese, Richard, to ALZA Corporation. System for delivering agent at zero order rate with emerging agent below saturation. 4,298,003, Cl. 128-260.000.

Theophile, Christ: *See*—

Pellerin, Andrew P.; and Theophile, Christ, 4,298,850, Cl. 333-257.000.

Thermo Electron Corporation: *See*—

Huffman, Fred N., 4,298,798, Cl. 250-423.00R.

Thermonetics, Inc.: *See*—

Samis, James M.; Waechter, Walter C.; and James, Ronald D., 4,298,621, Cl. 426-55.000.

Thill, Gary A.; and Strand, Jerome E., to Minnesota Mining and Manufacturing Company. Fluid dispensing device. 4,298,000, Cl. 128-218.00A.

Thiokol Corporation: *See*—

Biddle, Richard A.; Vriesen, Calvin W.; and Sutton, Ernest S., 4,298,412, Cl. 149-19.500.

Thomas Broadbent & Sons Limited: *See*—

Jackson, Joseph F., 4,298,160, Cl. 233-7.000.

Thomas C. Elder, Inc.: *See*—

Kaufman, Kurt D., 4,298,614, Cl. 424-279.000.

Thomas, Charles E.: *See*—

Eichelberger, Charles W.; Thomas, Charles E.; and Wojnarowski, Robert J., 4,298,789, Cl. 219-406.000.

Thomas, Lowell E., to Dynamics Research Corporation. Method of forming insulated conductors in a conductive medium and article thus formed. 4,298,436, Cl. 204-15.000.

Thompson, David A.: *See*—

Johnson, Lauren K.; and Thompson, David A., 4,298,389, Cl. 501-77.000.

Thomson-CSF: *See*—

Crochet, Pierre, 4,298,876, Cl. 343-756.000.

Dupressoir, Albert; and Salvat, Francois, 4,298,878, Cl. 343-795.000.

Thorn Svenska A.B.: *See*—

Adolfsson, Rune F. R.; and Gellert, Dietrich W., 4,298,551, Cl. 261-121.00R.

Thyret, Helmut; Balwe, Thomas; Hanzalik, Josef; Furst, Herbert; and Bauer, Johann, to Wacker-Chemie GmbH. Polymerization autoclave. 4,298,576, Cl. 422-135.000.

Times Fiber Communications, Inc.: *See*—

Dabby, Franklin W.; and Chesler, Ronald B., 4,298,366, Cl. 65-3.120.

Timex Corporation: *See*—

Sethofer, Nicholas L., 4,298,528, Cl. 260-340.700.

Tkalenko, Victor J., Jr.: *See*—

McElligott, Michael J.; and Tkalenko, Victor J., Jr., 4,298,216, Cl. 203-6.000.

Toda, Munetaka: *See*—

Masaki, Masaru; Ito, Yoshinori; Inoue, Akihiko; and Toda, Munetaka, 4,297,867, Cl. 72-347.000.

Togo, Shoichi; and Miyashita, Takeshi, to Canon Kabushiki Kaisha. Display device for camera. 4,298,257, Cl. 354-23.00D.

Tokyo Keiki Company Limited: *See*—

Tsuchiya, Shunji; and Takamatsu, Takashi, 4,298,318, Cl. 418-61.00B.

Tokyo Kogaku Kikai Kabushiki Kaisha: *See*—

Karasawa, Yukinori, 4,298,919, Cl. 362-226.000.

Tokyo Shibaura Denki Kabushiki Kaisha: *See*—

Nakajima, Koichiro; and Watanabe, Masaharu, 4,298,410, Cl. 148-172.000.

Nei, Hiromichi; Ohtani, Ryoichi; Ohshima, Iwao; and Horikawa, Yuji, 4,297,873, Cl. 73-61.0LM.

Shimokawa, Yoshiyuki; and Tanimoto, Itaru, 4,298,933, Cl. 364-200.000.

Suzuki, Yukio, 4,298,780, Cl. 219-10.55B.

Takamura, Yoshio; Abe, Soichiro; Nakamura, Noboru; and Suzuki, Hiroyuki, 4,298,894, Cl. 358-229.000.

Takanashi, Yukio; and Higuchi, Toshiharu, 4,298,814, Cl. 313-302.000.

Tamura, Hiroshi; and Nakaie, Yutaka, 4,298,947, Cl. 364-557.000.

Yoshimaru, Tomohisa; Sato, Yasuhiro; and Yamashita, Mitsuo, 4,298,269, Cl. 355-3.00R.

Tokyo Shibaura Electric Co., Ltd.: *See*—

Komatsu, Shigeru; Takahashi, Satoshi; and Wakatsuki, Masao, 4,298,883, Cl. 357-72.000.

Toma, John W., to General Electric Company. Two-speed clutch with neutral. 4,298,110, Cl. 192-48.400.

Tomassetti, Jerome, Jr.; and Lerch, Adolph F. Dome structure. 4,297,814, Cl. 52-81.000.

Tominaga, Hideo, to Fontaine Industries, Inc. Lens-free sighting device. 4,297,789, Cl. 33-298.000.

Tomiyama, Raiji: *See*—

Kogo, Hiroshi; Tonooka, Mamoru; Aoki, Teruhisa; Ando, Shigeo; and Tomiyama, Raiji, 4,298,965, Cl. 367-13.000.

Tompson, Clement R.; and Gruner, Garrett. Heating system. 4,298,943, Cl. 364-505.000.

Tonnessen, Arne, to Moss Rosenberg Verft A.S. Tank with a dome onboard ships. 4,297,960, Cl. 114-74.00A.

Tonooka, Mamoru: *See*—

Kogo, Hiroshi; Tonooka, Mamoru; Aoki, Teruhisa; Ando, Shigeo; and Tomiyama, Raiji, 4,298,965, Cl. 367-13.000.

Torigai, Akiyoshi, to Canon Kabushiki Kaisha. Magnetic powder transporting device. 4,297,969, Cl. 118-652.000.

Torregrossa, Louis O.; Bentvelzen, Jozef M.; Crosby, Gerald D.; Meredith, Michael D.; and Bepple, Henry, to Weyerhaeuser Company. Method and apparatus for treating pulp with oxygen in a multi-stage bleaching sequence. 4,298,426, Cl. 162-57.000.

Torregrossa, Louis O.: *See*—

Bentvelzen, Jozef M.; Meredith, Michael D.; Torregrossa, Louis O.; and Bepple, Henry, 4,298,427, Cl. 162-57.000.

Torrington Company; The: *See*—

Stella, Leo, 4,298,098, Cl. 184-105.00B.

Tosaka, Umi: *See*—

Marushima, Giichi; Tanaka, Hiroshi; Tosaka, Umi; Takahashi, Shinkichi; and Komiyu, Takao, 4,298,669, Cl. 430-55.000.

Tournier, Claude. Method and installation for processing bovine feet. 4,297,764, Cl. 17-46.000.

Toyo Boseki Kabushiki Kaisha: *See*—

Miyagawa, Yoshiaki; and Mitomi, Takeshi, 4,298,643, Cl. 428-85.000.

Toyo Kogyo Co., Ltd.: *See*—

Mizuma, Takashi, 4,298,226, Cl. 296-216.000.

Toyo Seikan Kaisha, Ltd.: *See*—

Ohmi, Hidehiko; and Ishibashi, Kazuhisa, 4,298,320, Cl. 425-110.000.

Toyoda-Koki Kabushiki-Kaisha: *See*—

Etoh, Kunihiko; Ishigaki, Tamotsu; and Niwa, Kuniyuki, 4,298,928, Cl. 364-200.000.

Toyoshima, Masakatsu: *See*—

Someno, Noboru; Komatsubara, Michimasa; and Toyoshima, Masakatsu, 4,298,989, Cl. 455-183.000.

Toyota, Akinori: *See*—

Morita, Yoshinori; Toyota, Akinori; and Kashiwa, Norio, 4,298,713, Cl. 525-323.000.

Toyota Jidosha Kogyo Kabushiki Kaisha: *See*—

Inada, Masami; Kitamura, Kazuhiko; Ito, Shoji; Nonoyama, Takao; and Tsuji, Riichi, 4,298,020, Cl. 137-315.000.

Masaki, Masaru; Ito, Yoshinori; Inoue, Akihiko; and Toda, Munetaka, 4,297,867, Cl. 72-347.000.

Trane Company, The: *See*—

Butt, Alan G.; and Whitehead, Abe G., 4,297,775, Cl. 29-157.30R.

Traxler, Peter: *See*—

Schupp, Thomas; Traxler, Peter; and Nuesch, Jakob, 4,298,692, Cl. 435-119.000.

Treton, Jean-Pierre: *See*—

Michelet, Guy; and Treton, Jean-Pierre, 4,298,247, Cl. 350-295.000.

Trimborn, Werner: *See*—

Lechtken, Peter; Buethe, Ingolf; Jacobi, Manfred; and Trimborn, Werner, 4,298,738, Cl. 546-22.000.

Troitsky, Adrian P.: *See*—

Batalin, Oleg E.; Dykman, Arkady S.; Osadchenko, Alexandr I.; Balkhanova, Galina F.; Belgorodsky, Izrail M.; Nevstruev, Vladimir I.; Radionov, Valery A.; Tulchinsky, Eduard A.; Belyaev, Valentin M.; Smolin, Jury I.; Breiman, Mark I.; Orlyansky, Vitaly V.; Zhirnov, Nikolai Y.; Galibin, Nikolai V.; Troitsky, Adrian P.; and Kovalenko, Vladimir V., 4,298,503, Cl. 252-432.000.

Trutzschler GmbH & Co. KG: *See*—

Leifeld, Ferdinand, 4,297,767, Cl. 19-80.00R.

Trutzschler, Hermann, 4,297,766, Cl. 19-80.00R.

Trutzschler, Hermann, to Trutzschler GmbH & Co. KG. Method and apparatus for forming fiber mixtures. 4,297,766, Cl. 19-80.00R.

TRW Inc.: *See*—

McKee, William H., 4,298,242, Cl. 339-258.00R.

Tschannen, Gottfried: *See*—

Burianek, Rudolf; and Tschannen, Gottfried, 4,298,889, Cl. 358-148.000.

Tsuchimoto, Takamitsu: *See*—

Nishihara, Mikio; Oda, Masahiro; and Tsuchimoto, Takamitsu, 4,298,770, Cl. 174-68.500.

Tsuchiya, Shunji; and Takamatsu, Takashi, to Tokyo Keiki Company Limited. Rotary valve for fluid motor or pump. 4,298,318, Cl. 418-61.00B.

Tsuchiya, Tsutomu: *See*—

Umezawa, Hamao; Umezawa, Sumio; Tsuchiya, Tsutomu; Jikahara, Tomo; and Miyake, Toshiaki, 4,298,727, Cl. 536-10.000.

Tsuda, Hiroshi; Miyashita, Kiyoshi; Nishikawa, Masaji; Shimizu, Akira; and Kasuga, Muneo, to Olympus Optical Company Limited. Electrographic apparatus. 4,298,270, Cl. 355-3.0SH.

Tsuda, Hiroshi; Miyashita, Kiyoshi; Kimura, Katsuhiko; Arima, Heihachi; and Ishimoto, Osamu, to Olympus Optical Company Limited. Feeding apparatus cassette type roll sheet. 4,298,276, Cl. 355-72.000.

Tsuge, Shin: *See*—

Takeuchi, Tsugio; Tsuge, Shin; Hirata, Yukio; and Mochizuki, Koichi, 4,298,795, Cl. 250-282.000.

Tsuji, Riichi: *See*—

Inada, Masami; Kitamura, Kazuhiko; Ito, Shoji; Nonoyama, Takao; and Tsuji, Riichi, 4,298,020, Cl. 137-315.000.

Tsunoda, Yoshito; Tatsuno, Kimio; Miyauchi, Toshimitsu; Aiki, Kunio; and Ito, Ryoichi, to Hitachi, Ltd. Optical head for a videodisc player/recorder. 4,298,974, Cl. 369-45.000.

Tsuruta, Hideki: *See*—

Nishikawa, Osamu; Ishimaru, Kenji; Takeshita, Toru; and Tsuruta, Hideki, 4,298,537, Cl. 260-397.200.

Tuggle, Lloyd H., to Beaird-Poulan Division. Chain saw nose guard. 4,297,786, Cl. 30-382.000.

Tulchinsky, Eduard A.: *See*—

Batalin, Oleg E.; Dykman, Arkady S.; Osadchenko, Alexandr I.; Balkhanova, Galina F.; Belgorodsky, Izrail M.; Nevstruev, Vladimir I.; Radionov, Valery A.; Tulchinsky, Eduard A.; Belyaev, Valentin M.; Smolin, Jury I.; Breiman, Mark I.; Orlyansky, Vitaly V.; Zhirnov, Nikolai Y.; Galibin, Nikolai V.; Troitsky, Adrian P.; and Kovalenko, Vladimir V., 4,298,503, Cl. 252-432.000.

Tullock, Charles W.: *See*—

Collette, John W.; and Tullock, Charles W., 4,298,722, Cl. 526-348.600.

Turnbull, John, to Celanese Corporation. Belting fabric. 4,298,648, Cl. 428-195.000.

Tutty, Geoffrey C., to INCA Limited. Image wise developable sheet. 4,298,651, Cl. 428-307.000.

Tyler, Derek E.: *See*—

Dantzig, Jonathan A.; and Tyler, Derek E., 4,298,187, Cl. 266-217.000.

Tyley, Leonard R. T.: *See*—

Munday, George; Slater, David H.; Tyley, Leonard R. T.; Berenblut, Brian J.; and Whitehouse, Harry B., 4,298,955, Cl. 364-900.000.

Tzikas, Athanassios, to Ciba-Geigy Ag. Process for the manufacture of 1,2-diaminoanthraquinone. 4,298,536, Cl. 260-378.000.

Uchida, Mitsuo; Oguri, Yasuo; Saito, Junji; and Kawahara, Tsukasa, to Mitsubishi Chemical Industries, Ltd. Process for preparing calcium silicate shaped product. 4,298,561, Cl. 264-86.000.

Uchida, Ryohei: *See*—

Akamatsu, Masahiko; and Uchida, Ryohei, 4,298,838, Cl. 324-117.00R.

Uchida, Takaaki: *See*—

Doi, Yoshikazu; Uchida, Takaaki; and Sakai, Yutaka, 4,298,252, Cl. 350-470.000.

Uchidoi, Masanori: *See*—

Kawamura, Masaharu; Shigeta, Yoshihiro; Uchidoi, Masanori; Sugiura, Yoji; and Yamamoto, Hiroshi, 4,298,256, Cl. 354-23.00D.

Uchiyama, Yoshihiro: *See*—

Sato, Isao; Kato, Fumio; Uchiyama, Yoshihiro; Iizuka, Nobuyuki; and Hata, Tsuneyuki, 4,297,843, Cl. 60-39.320.

Ueda, Hiraki: *See*—

Nishi, Takao; Ueda, Hiraki; and Nakagawa, Kazuyuki, 4,298,739, Cl. 546-158.000.

Ueda, Ikuo; Takaya, Takao; Kobayashi, Masakazu; Masugi, Takashi; Takasugi, Hisashi; Kochi, Hiromu; and Kitaguchi, Tadashi, to Fujisawa Pharmaceutical Co., Ltd. Alkoxyimino dioxy butyric acid derivatives. 4,298,529, Cl. 260-340.90R.

Uemura, Yukikazu: *See*—

Sano, Takezo; Inoue, Tadanori; and Uemura, Yukikazu, 4,297,945, Cl. 101-395.000.

Ueno, Takashi; and Nakamura, Kyoichi, to Kanegafuchi Kagaku Kogyo Kabushiki Kaisha. Foams prepared from polypropylene resin composition and process for producing same. 4,298,706, Cl. 521-92.000.

Umezawa, Hamao; Umezawa, Sumio; Tsuchiya, Tsutomu; Jikahara, Tomo; and Miyake, Toshiaki, to Zaidan Hojin Biseibutsu Kagaku KenkyuKai. 3',4'-Dideoxykanamycin A and 1-N-(S)-α-hydroxy-ω-aminoalkanoyl) derivatives thereof. 4,298,727, Cl. 536-10.000.

Umezawa, Sumio: *See*—

Umezawa, Hamao; Umezawa, Sumio; Tsuchiya, Tsutomu; Jikahara, Tomo; and Miyake, Toshiaki, 4,298,727, Cl. 536-10.000.

Unarco Industries, Inc.: *See*—

Coules, Ronald A., 4,297,769, Cl. 174-138.00D.

Upshaw, Clarence W.; and Goodwin, Richard A., 4,298,127, Cl. 211-126.000.

Union Carbide Corporation: *See*—

Evans, William P.; and Leger, Violeta Z., 4,298,665, Cl. 429-197.000.

Farina, Peter R.; and Grattan, James A., 4,298,735, Cl. 544-257.000.

Szekely, Andrew G., 4,298,377, Cl. 75-53.000.

Union Siderurgique du nord et de l'est de la France ("USINOR"): *See*—

Germain, Alfred; and Bonamour du Tartre, Georges, 4,298,188, Cl. 266-114.000.

Unisearch Limited: *See*—

Hawkins, Laric V., 4,298,967, Cl. 367-57.000.

United Kingdom Atomic Energy Authority: *See—*
James, Robin H.; and Spooner, James A., 4,298,495, Cl. 252-643.000.
United Kingdom of Great Britain and Northern Ireland, Secretary of State for Transport in Her Britannic Majesty's Government of the: *See—*
Higrett, Henry J., 4,298,080, Cl. 175-373.000.
U.S. Industries, Inc.: *See—*
Oldford, William G., 4,297,869, Cl. 72-405.000.
United States of America
Administrator, National Aeronautics and Space Administration: *See—*
Stattel, Raymond J.; and Niswander, James K., 4,298,987, Cl. 375-106.000.
Agriculture: *See—*
Frick, John G., Jr.; and Harper, Robert J., Jr., 4,298,747, Cl. 548-318.000.
McGovern, Terrence P.; and Schreck, Carl E., 4,298,612, Cl. 424-267.000.
Air Force: *See—*
Lee, Henry E., 4,298,942, Cl. 364-483.000.
Romanski, John O., 4,298,858, Cl. 340-146.3MA.
Army: *See—*
Ballard, Arthur H.; and Klein, Theodore J., 4,298,985, Cl. 375-82.000.
Castillo, Tomas R.; and Gardiner, Arthur L., 4,297,939, Cl. 89-33.00L.
Donovan, William F., 4,297,948, Cl. 102-473.000.
Roberts, Eugene L., 4,298,873, Cl. 343-100.0SA.
Energy: *See—*
DeFord, Henry S.; and Clark, Mark L., 4,298,496, Cl. 252-359.00A.
Neuworth, Martin B., 4,298,451, Cl. 208-8.0LE.
O'Brien, Harold A., Jr.; Hopf, Homer B.; and Wanek, Philip M., 4,298,591. Cl. 424-1.000.
Ross, David S.; and Blessing, James E., 4,298,450, Cl. 208-8.0LE.
National Aeronautics and Space Administration: *See—*
Black, James M., 4,298,926, Cl. 363-132.000.
Edwards, John W.; and Smith, John W., 4,298,833, Cl. 318-561.000.
Navy: *See—*
Bosler, Alan J.; and Nash, Larry E., 4,298,905, Cl. 361-386.000.
Bucaro, Joseph A., 4,297,887, Cl. 73-655.000.
Glass, Cecil A.; and Burns, Dallas D., 4,297,949, Cl. 102-229.000.
Lapp, Roger H., 4,298,248, Cl. 350-310.000.
Warnshuis, Paul L., Jr.; and Serrell, Peter V., 4,298,964, Cl. 367-4.000.
U.S. Philips Corporation: *See—*
Bongers, Piet F.; van Tol, Maurits W.; and Robertson, John M., 4,298,820, Cl. 313-463.000.
Colditz, Johannes K. E., 4,298,804, Cl. 376-108.000.
Hodemaekers, Andreas M. L., 4,298,866, Cl. 340-713.000.
Melis, Johannes H. A. M.; and Le Mair, Willem, 4,298,793, Cl. 235-487.000.
Staas, Frans A.; van Haeringen, Willem; and Severijns, Adrianus P., 4,297,856, Cl. 62-514.00R.
van der Veen, Jan; Kivits, Petrus J.; and de Bont, Marinus R. J., 4,298,975, Cl. 369-94.000.
United States Steel Corporation: *See—*
Oaler, Herbert W., 4,298,132, Cl. 220-288.000.
United Technologies Corporation: *See—*
Snitzer, Elias; and Meltz, Gerald, 4,298,794, Cl. 250-227.000.
Sundermeyer, Frank D.; and Calcasola, Richard W., 4,298,959, Cl. 364-900.000.
University of California, Regents of the: *See—*
Dauben, William G.; Kessel, Carl R.; and Takemura, Kazuo H., 4,298,752, Cl. 549-42.000.
Fahmy, Mohamed A. H.; and Fukuto, Tetsuo R., 4,298,527, Cl. 260-340.50R.
Fahmy, Mohamed A. H.; and Fukuto, Tetsuo R., 4,298,617, Cl. 424-298.000.
University of Minnesota, The Regents of the: *See—*
Iwasaki, Iwao, 4,298,169, Cl. 241-16.000.
University of Saskatchewan: *See—*
Acres, Stephen D.; and Kapitany, Robert A., 4,298,597, Cl. 424-92.000.
University of Utah: *See—*
Oblad, Alex G.; Shabtai, Joseph; and Ramakrishnan, Rasmasamy, 4,298,457, Cl. 208-107.000.
UOP Inc.: *See—*
Antos, George J., 4,298,462, Cl. 208-139.000.
Antos, George J., 4,298,504, Cl. 252-441.000.
Carlson, David H. J., 4,298,502, Cl. 252-431.00N.
Frame, Robert R., 4,298,463, Cl. 208-189.000.
Imai, Tamotsu, 4,298,499, Cl. 252-414.000.
Kulprathipanja, Santi, 4,298,501, Cl. 252-430.000.
Upjohn Company, The: *See—*
Kelly, Robert C.; and Wierenga, Wendell, 4,298,744, Cl. 548-240.000.
Upshaw, Clarence W.; and Goodwin, Richard A., to Unarco Industries, Inc. Stacking basket assembly. 4,298,127, Cl. 211-126.000.
Uram, David J.: *See—*
Maier, Alfred E.; Shimp, Alan B.; and Uram, David J., 4,298,852, Cl. 335-6.000.
Urbach, Hans: *See—*
Hamprecht, Gerhard; Stubenrauch, Gerd; Urbach, Hans; and Wuerzer, Bruno, 4,298,731, Cl. 544-11.000.
Uriza, Eduardo C. Sterile bandage and tourniquet. 4,297,996, Cl. 128-169.000.
Ushio Denki Kabushikikaisha: *See—*
Nakajima, Yahei, 4,298,827, Cl. 315-241.00R.
USV Pharmaceutical Corporation: *See—*
Brown, Richard E.; St. Georgiev, Vasil; and Loev, Bernard, 4,298,742, Cl. 548-152.000.
Vadas, Robert M.: *See—*
Shaver, Marvin B.; Vadas, Robert M.; and Stock, Norman A., 4,298,113, Cl. 192-0.094.
Vagman, Selmer, to ITT Industries, Inc. Method for mounting motor stators. 4,297,784, Cl. 29-596.000.
Van Dorn Company: *See—*
Stroup, John F.; Nypaver, Leonard P.; and Eberst, Dale S., 4,297,901, Cl. 73-862.530.
Van Berkel, Johannes; and Kelderman, Hendrik C., to Shell Oil Company. 2-[2-(2,2-Dihalovinyl)-3,3-dimethylcyclopropyl]vinyl alkanoates. 4,298,757, Cl. 560-231.000.
van den Brom, Guido C., to Lever Brothers Company. Built liquid detergent composition. 4,298,492, Cl. 252-97.000.
van der Lely, Cornelis. Soil cultivating implements. 4,298,069, Cl. 172-59.000.
van der Lely, Cornelis. Soil cultivating machines. 4,298,070, Cl. 172-123.000.
van der Veen, Jan; Kivits, Petrus J.; and de Bont, Marinus R. J., to U.S. Philips Corporation. Optical recording medium and method of optically recording information thereon. 4,298,975, Cl. 369-94.000.
Van Eenam, Donald N., to Monsanto Company. Wet strength polymers. 4,298,639, Cl. 427-386.000.
Van Eenam, Donald N., to Monsanto Company. Polyamine/epihalohydrin reaction products. 4,298,715, Cl. 525-340.000.
Vanek, Chester F.: *See—*
Mangurten, Henry H.; and Vanek, Chester F., 4,298,011, Cl. 128-763.000.
van Haeringen, Willem: *See—*
Staas, Frans A.; van Haeringen, Willem; and Severijns, Adrianus P., 4,297,856, Cl. 62-514.00R.
Van Steenwyk, Donald H.; Cash, John R.; and Ott, Paul W., to Applied Technologies Associates. Survey apparatus and method employing rate-of-turn and free gyroscopes. 4,297,790, Cl. 33-313.000.
van Tol, Maurits W.: *See—*
Bongers, Piet F.; van Tol, Maurits W.; and Robertson, John M., 4,298,820, Cl. 313-463.000.
Varian Associates, Inc.: *See—*
Abbott, Seth R., 4,298,500, Cl. 252-428.000.
Varis, Martti: *See—*
Olin, Henry; Tallberg, Nils; and Varis, Martti, 4,297,751, Cl. 4-431.000.
VBE Industries, Ltd.: *See—*
Terada, Sachio; Suhara, Akito; Shimada, Toshiro; Nakamura, Takashi; Hujii, Kunizo; and Nakahira, Nobuichi, 4,298,424, Cl. 156-668.000.
Veb Arzneimittelwerk Dresden: *See—*
Kallies, Karl-Heinz, 4,298,688, Cl. 435-14.000.
Veeder, George T.; and Kang, Kenneth S., to Merck & Co., Inc. Preparation of heteropolysaccharide S-156. 4,298,691, Cl. 435-101.000.
Vela, Octavio A.: *See—*
Shawhan, E. Neil; Vela, Octavio A.; and Smither, Miles A., 4,298,970, Cl. 367-82.000.
Verbrugge, Pieter A.; and Kramer, Petrus A., to Shell Oil Company. 1R, Cis 2,2-dihalovinyl-3,3-dimethylcyclopropylmethanol and ester derivatives. 4,298,756, Cl. 560-231.000.
Vereinigte Baubeschlagfabriken Gretsch & Co. GmbH: *See—*
Storandt, Ralf, 4,298,213, Cl. 280-628.000.
Vickers, Stanley E.: *See—*
Schieser, Warren J.; and Vickers, Stanley E., 4,297,929, Cl. 83-110.000.
Vignotto, Angelo: *See—*
Norlander, Gosta; Vignotto, Angelo; and Micca, Mario, 4,298,079, Cl. 175-339.000.
Vilkomerson, David H. R.: *See—*
Mezrich, Reuben S.; Vilkomerson, David H. R.; and Gardineer, Bayard, 4,298,009, Cl. 128-660.000.
Vinogradov, Eugenij: *See—*
Bielska-Lewandowska, Halina; Irisova, Natalija; Jung, Grzegorz; Lewandowski, Stanislaw J.; Prohorov, Aleksandr; Sobolewski, Roman; and Vinogradov, Eugenij, 4,298,990, Cl. 455-325.000.
Viscardi, Ettore, to Somet Societa Meccanica Tessile S.p.A. Weft presenting device for weaving looms. 4,298,034, Cl. 139-453.000.
Vital Signs, Inc.: *See—*
Buck, Norman R.; and Hanson, David J., 4,298,775, Cl. 179-81.00R.
Vitamins, Inc.: *See—*
Singh, Laxman; and Rice, Wayne K., 4,298,622, Cl. 426-254.000.
Vitkin, Alexandr L.: *See—*
Avdeenko, Boris K.; Bronfman, Aron I.; Vitkin, Alexandr L.; Zelentsov, Boris N.; Kinevsky, Valery N.; and Rozet, Vladimir E., 4,298,900, Cl. 361-127.000.
Voest-Alpine AG: *See—*
Staudinger, Gernot, 4,298,355, Cl. 48-206.000.
Vofsi, David: *See—*
Allingham, Yael; and Vofsi, David, 4,298,384, Cl. 106-18.340.
Levin, Gideon; and Vofsi, David, 4,298,714, Cl. 525-330.000.

Vogel, Edward G.; and Westlund, Rodney C., to Lebanon Steel Foundry. Coherent rigid solid material. 4,298,554, Cl. 264-25.000.
Vogel, Pierre; and Carrupt, Pierre-Alain, to Hoffmann-La Roche Inc. Anthracyclinones. 4,298,535, Cl. 260-365.000.
Volgin, Leonid A.: *See—*
Paton, Boris E.; Kudinov, Vladimir M.; Volgin, Leonid A.; Petushkov, Vladimir G.; Bushtedt, Jury P.; Koroteev, Anatoly Y.; and Kotov, Viktor A., 4,297,946, Cl. 102-307.000.
Volkswagenwerk AG: *See—*
Stahl, Reinhard, 4,297,877, Cl. 73-146.000.
Volkswagenwerk Aktiengesellschaft: *See—*
Dorpmund, Heinz; and Oberpichler, Oerd, 4,298,109, Cl. 192-0.044.
von Arndt, Ernst M.: *See—*
Holzer, Helmut; and von Arndt, Ernst M., 4,298,203, Cl. 277-152.000.
von Rintelen, Harald: *See—*
Becker, Manfred; Slabik, Angela; Mucke, Bruno; Moisar, Erik; and von Rintelen, Harald, 4,298,683, Cl. 430-569.000.
Vossen, Franz, to Huggles & Meurer. Cover for frying pans or similar vessels. 4,298,135, Cl. 220-371.000.
Vriesen, Calvin W.: *See—*
Biddle, Richard A.; Vriesen, Calvin W.; and Sutton, Ernest S., 4,298,412, Cl. 149-19.500.
W. A. Cleary Chemical Corporation: *See—*
Sartoretto, Paul; and Tao, Kak-Yuen, 4,298,512, Cl. 260-29.40R.
Wacker-Chemie GmbH: *See—*
Schinabeck, Anton; Zeller, Norbert; Lindner, Tassilo; Engelsberger, Georg; and Riedle, Rudolf, 4,298,753, Cl. 556-415.000.
Thyret, Helmut; Balwe, Thomas; Hanzalik, Josef; Furst, Herbert; and Bauer, Johann, 4,298,576, Cl. 422-135.000.
Waechter, Walter C.: *See—*
Samis, James M.; Waechter, Walter C.; and James, Ronald D., 4,298,621, Cl. 426-55.000.
Wagner, Sigurd: *See—*
Boyd, Gary D.; Mohapatra, Sarat K.; Tell, Benjamin; Wagner, Sigurd; and Wudl, Fred, 4,298,250, Cl. 350-357.000.
Wagner, Terrence E.: *See—*
McCarty, John C.; and Wagner, Terrence E., 4,298,654, Cl. 428-407.000.
Wahl, Hans J.: *See—*
Krenzer, Paul; Peters, Franz-Josef; Schlusnus, Karl-Heinz; and Wahl, Hans J., 4,298,785, Cl. 219-124.340.
Wakatsuki, Masao: *See—*
Komatsu, Shigeru; Takahashi, Satoshi; and Wakatsuki, Masao, 4,298,883, Cl. 357-72.000.
Walker, Raymond W.: *See—*
Horton, Edward E.; and Walker, Raymond W., 4,297,965, Cl. 114-265.000.
Wallace, Michael W. Fermentation apparatus. 4,298,693, Cl. 435-305.000.
Walley, Charles E. Mixing device. 4,298,289, Cl. 366-196.000.
Wallner, Thomas G.: *See—*
Wright, Thomas C.; Hudrlik, Terrence R.; Mills, Perry A.; Rust, Robert C.; and Wallner, Thomas G., 4,298,007, Cl. 128-419.0PG.
Walsdorfer, Hubert: *See—*
Kassel, Karl-Heinz; Lutz, Manfred; Stuke, Josef; and Walsdorfer, Hubert, 4,298,671, Cl. 430-128.000.
Walsh, Fraser M., to Kor Incorporated. $^{13}CO_2$ Breath test. 4,298,347, Cl. 23-230.00B.
Walsh, John E., to Dartmouth College; and Walsh, John E., a part interest. Millimeter and sub-millimeter radiation source. 4,298,824, Cl. 315-4.000.
Walter, Helmut: *See—*
Moraw, Roland; and Walter, Helmut, 4,298,217, Cl. 283-7.000.
Walter, John W. Self-adhesive crossover foil of metal and polyester. 4,298,642, Cl. 428-40.000.
Walter Kidde and Company, Inc.: *See—*
Riordan, William J.; and Cunha, Richard A., 4,298,335, Cl. 431-25.000.
Walters, William R. Energy saver control for outdoor water heater. 4,298,022, Cl. 137-341.000.
Wanek, Philip M.: *See—*
O'Brien, Harold A., Jr.; Hopf, Homer B.; and Wanek, Philip M., 4,298,591, Cl. 424-1.000.
Wang, Cheng L.; Soodak, Charles; and Lohr, David, to Baxter Travenol Laboratories, Inc. Backup control circuit for kidney dialysis machine. 4,298,938, Cl. 364-413.000.
Ward, Daniel L., Jr. Connector clamp. 4,298,291, Cl. 403-205.000.
Ward, Michael A. V. Spherical reentrant chamber. 4,297,983, Cl. 123-536.000.
Ware, Donna L. Motion light device. 4,298,917, Cl. 362-157.000.
Warman, Thomas E.: *See—*
Baker, Gordon P.; and Warman, Thomas E., 4,298,072, Cl. 173-13.000.
Warne, Michael A., to Marston Excelsior Limited. Anode for cathodic protection system. 4,298,445, Cl. 204-196.000.
Warner, Gerald T.; and Potter, Colin G. Method of, and apparatus for, monitoring radioactivity. 4,298,796, Cl. 250-328.000.
Warner-Lambert Company: *See—*
Langren, Robert J., 4,297,753, Cl. 5-81.00C.
Warner & Swasey Company, The: *See—*
Kuroda, Naoki, 4,297,927, Cl. 83-36.000.
Warnshuis, Paul L., Jr.; and Serrell, Peter V., to United States of America, Navy. Towed deployment of acoustic arrays. 4,298,964, Cl. 367-4.000.
Washigawa, Yasuo: *See—*
Shinozaki, Fumiaki; Washigawa, Yasuo; Ikeda, Tomoaki; Nakao, Sho; and Kondoh, Syunichi, 4,298,679, Cl. 430-281.000.
Washington University: *See—*
Davis, Robert B.; Skelton, John; Clark, Richard E.; and Swanson, Wilbur M., 4,297,749, Cl. 3-1.500.
Watanabe, Masaharu: *See—*
Nakajima, Koichiro; and Watanabe, Masaharu, 4,298,410, Cl. 148-172.000.
Watanabe, Minoru; Kume, Kazunari; Ohno, Hideshi; and Tamaru, Munetaka, to Citizen Watch Co. Ltd. Electronic timepiece. 4,297,838, Cl. 368-76.000.
Watanabe, Takashi: *See—*
Ikeno, Teruo; Kado, Satoshi; Ayusawa, Saburo; Kawasaki, Hironobu; and Watanabe, Takashi, 4,298,661, Cl. 428-623.000.
Watson, James H. P.; and Jones, James P. B., to English Clays Lovering Pochin & Co., Ltd. Method of, and a magnetic separator for, separating magnetizable particles from a fluid. 4,298,478, Cl. 210-695.000.
Wattier, Jean-Mary: *See—*
Kucza, Jean-Claude; Mastrot, Albert; Perrot, Rene; and Wattier, Jean-Mary, 4,297,777, Cl. 29-420.000.
Wavre, Alain, to Ateliers des Charmilles, S.A. Method and apparatus for straightening the wire electrode of an electrical discharge machining apparatus. 4,298,782, Cl. 219-69.00M.
Weaver, Harry B.: *See—*
McCarter, Louis N., III; Deemer, W. Robert; Meeker, Robert G.; Weaver, Harry B.; and Smith, John W., 4,298,287, Cl. 366-4.000.
Weaver Shipyard and Drydock, Inc.: *See—*
Johnson, Fontain M., Jr., 4,297,961, Cl. 114-123.000.
Weber, Christian: *See—*
Meyborg, Holger; and Weber, Christian, 4,298,701, Cl. 521-51.000.
Weber, Heinz: *See—*
Hahn, Klaus; Hinselmann, Klaus; Halbritter, Klaus; Rebafka, Walter; and Weber, Heinz, 4,298,702, Cl. 521-79.000.
Weber, Robert E.: *See—*
Schmidt, George F.; and Weber, Robert E., 4,298,668, Cl. 429-250.000.
Weder, Donald E., to Seven W Enterprises, Inc. Laminated printed foil flower pot wrap with multicolor appearance. 4,297,811, Cl. 47-72.000.
Wehle, Volker: *See—*
Gerhardt, Werner; Wehle, Volker; Syldatk, Andreas; Rogall, Gabriele; Reiffert, Jurgen; and Conrad, Jens, 4,298,568, Cl. 422-16.000.
Weigel, Helmut; and Wollenschlager, Werner, to Draloric Electronic GmbH. Capacitor cascade. 4,298,902, Cl. 361-328.000.
Weigele, Hans: *See—*
Soffge, Friedhelm; and Weigele, Hans, 4,297,759, Cl. 14-2.600.
Weiler, Gerhard H.; and Komendowski, Henry, to Automatic Liquid Packaging, Inc. Dispensing container with plural removable closure means unitary therewith. 4,298,045, Cl. 150-0.500.
Weinstein, Jack: *See—*
Berghahn, Walter G.; and Weinstein, Jack, 4,298,125, Cl. 206-531.000.
Weinstein, Larry J., to Johns-Manville Corporation. Method and apparatus for measuring flow characteristics of moving fluid stream. 4,297,893, Cl. 73-861.000.
Weintraub, Marvin H.; and Oblinger, Fred. Resistive controller. 4,298,901, Cl. 361-178.000.
Weir, Stanley M.: *See—*
Loos, Evelyn J., 4,297,761, Cl. 15-105.000.
Weis, Klaus: *See—*
Kratel, Gunter; Katzer, Hans; Loskot, Stephan; Lang, Wilfried; and Weis, Klaus, 4,298,387, Cl. 501-92.000.
Weis, Siegfried K.: *See—*
Frost, Charles C.; and Weis, Siegfried K., 4,297,959, Cl. 113-116.0HH.
Weisbrod, Alvin J., to Anthony Industries, Inc. Mobile concreting apparatus and method. 4,298,288, Cl. 366-8.000.
Weiss, Arnold A., to AMF Incorporated. Ultrasonic tire testing apparatus. 4,297,876, Cl. 73-146.000.
Weiss, William R.: *See—*
Stables, Wilbur L.; Pendlebury, David; and Weiss, William R., 4,298,153, Cl. 226-97.000.
Weld, David B. Chumate. 4,297,804, Cl. 43-55.000.
Weld-Loc Systems, Inc.: *See—*
Austin, Robert C., 4,298,152, Cl. 226-95.000.
Wells, John J., Jr.; and Kleine, Donald R., to Wells, John J., Jr. Cheesecake cutting machine. 4,297,932, Cl. 83-581.100.
Weltmer, John T. Mechanized trowel for finishing concrete slabs. 4,298,555, Cl. 264-31.000.
Werner & Pfleiderer: *See—*
Bauer, Erwin; Davids, Ralf; Gotz, Gerhard; Jussen, Hilmar; Arndt, Heinrich; Kummel, Louis; Morhart, Rudolf; and Pollak-Banda, Erich, 4,297,917, Cl. 74-665.00G.
Wesemeyer, Jurgen: *See—*
Haubner, Georg; Wesemeyer, Jurgen; and Schrumpf, Hans, 4,298,930, Cl. 364-200.000.
Wessling, William C.: *See—*
Acker, Robert H.; Wessling, William C.; Brand, Arnold J.; and Naydan, Bob N., 4,298,832, Cl. 318-318.000.
West Point Pepperell, Inc.: *See—*
Pacifici, Joseph A.; and White, Jerry L., 4,297,860, Cl. 68-200.000.
Western Electric Company, Incorporated: *See—*
Schuchardt, Donald W., 4,298,856, Cl. 338-195.000.

Westinghouse Electric Corp.: *See—*
Daransky, Thomas E.; and Dickinson, John D., 4,298,019, Cl. 137-9.000.
Feilchenfeld, Michal M., 4,298,859, Cl. 340-146.30Z.
Fogg, James L., 4,297,776, Cl. 29-252.000.
Hollenbeck, Arthur; and Petro, James, 4,298,136, Cl. 221-1.000.
Johnston, Paul M., 4,298,839, Cl. 324-157.000.
Justice, James W. H.; and Nahemow, Martin D., 4,298,828, Cl. 315-248.000.
Maier, Alfred E.; Shimp, Alan B.; and Uram, David J., 4,298,852, Cl. 335-6.000.
Mendelsohn, Morris A., 4,298,656, Cl. 428-414.000.
Schneider, Urban A.; Monley, Robert E.; Nelson, Robert L.; and Glatthorn, Raymond H., 4,298,783, Cl. 219-75.000.
Silvestri, George J., Jr., 4,297,848, Cl. 60-660.000.
Smith, Winthrop W., Jr., 4,298,950, Cl. 364-726.000.
Thayer, Paul G., 4,298,314, Cl. 417-299.000.
Westlund, Rodney C.: *See—*
Vogel, Edward G.; and Westlund, Rodney C., 4,298,554, Cl. 264-25.000.
Westner, Andrew A.: *See—*
Oswald, Alexis A.; Jermansen, Torris G.; Westner, Andrew A.; and Huang, I-Der, 4,298,541, Cl. 260-429.00R.
Westran Corporation: *See—*
Counselor, Gary D.; Gerst, Robert C.; and Penningtoo, Reginald A., 4,298,049, Cl. 164-30.000.
Wexell, Dale R.: *See—*
Flannery, James E.; Stempin, John L.; and Wexell, Dale R., 4,298,390, Cl. 501-32.000.
Stempin, John L.; and Wexell, Dale R., 4,298,382, Cl. 75-202.000.
Weyerhaeuser Company: *See—*
Bentvelzen, Jozef M.; Meredith, Michael D.; Torregrossa, Louis O.; and Bepple, Henry, 4,298,427, Cl. 162-57.000.
Torregrossa, Louis O.; Bentvelzen, Jozef M.; Crosby, Gerald D.; Meredith, Michael D.; and Bepple, Henry, 4,298,426, Cl. 162-57.000.
Wheldon, Alfred G.: *See—*
Laws, Derek R. J.; Bath, Nigel A.; Ennis, Colin S.; Pickett, John A.; and Wheldon, Alfred G., 4,298,626, Cl. 426-600.000.
Whirlpool Corporation: *See—*
Paddock, Stephen W.; and Tershak, Andrew T., 4,297,851, Cl. 62-126.000.
Whistler, Roy L., to Purdoe University. Synthesis of N-benzoyl-L-ristosamine and intermediates used in its preparation. 4,298,726, Cl. 536-4.000.
White, Jerry L.: *See—*
Pacifici, Joseph A.; and White, Jerry L., 4,297,860, Cl. 68-200.000.
White, Joe I.; and Hawley, Elton G. Portable water drinking fountain. 4,298,166, Cl. 239-24.000.
Whitehead, Abe G.: *See—*
Butt, Alan G.; and Whitehead, Abe G., 4,297,775, Cl. 29-157.30R.
Whitehouse, Harry B.: *See—*
Munday, George; Slater, David H.; Tyley, Leonard R. T.; Berenblut, Brian J.; and Whitehouse, Harry B., 4,298,955, Cl. 364-900.000.
Whitfield, Carroll J.; and Lastinger, Anthony W., to Kelley Manufacturing Co. Cultivator with parallel quadrant plates for positioning cultivating element. 4,298,071, Cl. 172-624.000.
Wieland, Heinrich: *See—*
Seidel, Dietrich; Wieland, Heinrich; and Molinari, Ewald, 4,298,441, Cl. 204-180.00G.
Wierenga, Wendell: *See—*
Kelly, Robert C.; and Wierenga, Wendell, 4,298,744, Cl. 548-240.000.
Wiesenberger, Alois: *See—*
Sappok, Reinhard; Guellich, Fritz; Roth, Karl; and Wiesenberger, Alois, 4,298,526, Cl. 260-314.500.
Wilkens, Christian: *See—*
Blasberg, Helmar; and Wilkens, Christian, 4,297,858, Cl. 66-194.000.
Wilkes, Colin: *See—*
Gerhold, Bruce W.; and Wilkes, Colin, 4,297,842, Cl. 60-39.060.
Wilkinson Rubber Linatex Limited: *See—*
Ephithite, Henry J., 4,298,161, Cl. 233-7.000.
Willersinn, Carl-Heinz: *See—*
Engelbach, Heinz; Krabetz, Richard; Duembgen, Gerd; Willersinn, Carl-Heinz; and Beitelschmidt, Walter, 4,298,763, Cl. 568-479.000.
William H. Rorer, Inc.: *See—*
Condouris, George A.; Yelnosky, John; Riley, Richard L.; Won, Chong M.; Douglas, George H.; and Studt, William L., 4,298,608, Cl. 424-249.000.
Williams, Alan G.; Lawson, Christopher J.; and Wimpenny, Julian W. T., to Tate & Lyle Limited. Process for the preparation of polysaccharide 9. 4,298,725, Cl. 536-1.000.
Williams, Haydn W. R.: *See—*
Cragoe, Edward J., Jr.; Rooney, Clarence S.; and Williams, Haydn W. R., 4,298,743, Cl. 548-203.000.
Williams, Keith. Gauge for measuring carpet soiling. 4,298,282, Cl. 356-237.000.
Williams, Kenneth W.: *See—*
Bradford, Larry L.; Jordan, David R.; and Williams, Kenneth W., 4,298,557, Cl. 264-51.000.
Williams, Tecwyn L., to Elliott Turbomachinery Limited. Fluid jacket for a vessel. 4,298,060, Cl. 165-169.000.
Wills, Arthur B.: *See—*
Arter, Nelson K.; Devore, Ernest W.; Wills, Arthur B.; and Zelenka, Leslie R., 4,298,897, Cl. 360-39.000.
Wilpers, Dale J.: *See—*
Youn, Kun C.; and Wilpers, Dale J., 4,298,540, Cl. 260-412.400.
Wimpenny, Julian W. T.: *See—*
Williams, Alan G.; Lawson, Christopher J.; and Wimpenny, Julian W. T., 4,298,725, Cl. 536-1.000.
Wing, Harold R., to Little Giant Industries, Inc. Sawhorse. 4,298,093, Cl. 182-153.000.
Wingard, Robert E., Jr.: *See—*
Parkinson, Thomas M.; Brown, Joseph P.; and Wingard, Robert E., Jr., 4,298,595, Cl. 424-78.000.
Winsor, Jack O.; and Patrick, Dennis J., to Dresser Industries, Inc. Chuck and wrench assembly for raise drill apparatus. 4,298,076, Cl. 173-164.000.
Wintersdorff, Peter: *See—*
Cheng, Hsiung; and Wintersdorff, Peter, 4,298,729, Cl. 536-102.000.
Wixon, Harold E., to Colgate Palmolive Co. Detergent softener compositions. 4,298,480, Cl. 252-8.750.
Wochele, Jorg, to BBC, Brown, Boveri & Company Limited. Tube bundle heat exchanger. 4,298,058, Cl. 165-161.000.
Wochnowski, Waldemar, to Hauni-Werke Korber & Co. KG. Method of increasing the specific volume of tobacco ribs. 4,298,012, Cl. 131-296.000.
Woertche, Helmuth. Apparatus for packaging tape cassettes. 4,297,826, Cl. 53-157.000.
Wojnarowski, Robert J.: *See—*
Eichelberger, Charles W.; Thomas, Charles E.; and Wojnarowski, Robert J., 4,298,789, Cl. 219-406.000.
Wolf, Itzhak: *See—*
Alper, Yekutiel; Elkin, Itzhak; Wolf, Itzhak; Mihai, Gabriel; and Antler, Aharon, 4,297,832, Cl. 56-328.00R.
Wollenschlager, Werner: *See—*
Weigel, Helmut; and Wollenschlager, Werner, 4,298,902, Cl. 361-328.000.
Won, Chong M.: *See—*
Condouris, George A.; Yelnosky, John; Riley, Richard L.; Won, Chong M.; Douglas, George H.; and Studt, William L., 4,298,608, Cl. 424-249.000.
Woodrow, Peter F.: *See—*
Leeming, Peter A.; Mitakidis, Dimitrios; and Woodrow, Peter F., 4,298,394, Cl. 106-111.000.
Woodworth, Albert H., to Woodworth Carburetor Corp. of Nevada. Carburetor. 4,298,549, Cl. 261-39.00B.
Woodworth Carburetor Corp. of Nevada: *See—*
Woodworth, Albert H., 4,298,549, Cl. 261-39.00B.
Wootton, Gordon; and Moore, Richard W., to Beecham Group Limited. Hydantoin derivatives. 4,298,745, Cl. 548-313.000.
Wozny, Jerome L.: *See—*
Wozny, Philip A.; and Wozny, Jerome L., 4,297,989, Cl. 126-441.000.
Wozny, Philip A.; and Wozny, Jerome L. Solar heat collector. 4,297,989, Cl. 126-441.000.
Wright, Basil M.; and Jones, Thomas P. Gas sampling devices. 4,297,871, Cl. 73-23.000.
Wright, Thomas C.; Hudrlik, Terrence R.; Mills, Perry A.; Rust, Robert C.; and Wallner, Thomas G., to Cardiac Pacemakers, Inc. Atrial rate sensitive cardiac pacer circuit. 4,298,007, Cl. 128-419.0PG.
Wright, William J.: *See—*
Mancini, Derek V.; and Wright, William J., 4,298,137, Cl. 221-11.000.
Wu, Pai-Chuan: *See—*
Cancio, Leopoldo V.; and Wu, Pai-Chuan, 4,298,647, Cl. 428-167.000.
Wudl, Fred: *See—*
Boyd, Gary D.; Mohapatra, Sarat K.; Tell, Benjamin; Wagner, Sigurd; and Wudl, Fred, 4,298,250, Cl. 350-357.000.
Wuerzer, Bruno: *See—*
Hamprecht, Gerhard; Stobenrauch, Gerd; Urbach, Hans; and Wuerzer, Bruno, 4,298,731, Cl. 544-11.000.
Plath, Peter; Rohr, Wolfgang; Wuerzer, Bruno; and Becker, Rainer, 4,298,749, Cl. 548-377.000.
Wulz, Helmut, to Optilon W. Erich Heilmann GmbH. Slide fastener and method of making same. 4,297,770, Cl. 24-205.16R.
Wunning, Joachim, to J. Aichelin. Industrial heating installation and method of operation. 4,298,333, Cl. 431-11.000.
Wydra, Wally. Circular saw blade removing combination. 4,297,921, Cl. 81-3.00R.
Wyman, Floyd H., to Marshall and Williams Company. Drum filter apparatus. 4,298,473, Cl. 210-213.000.
Wyrepak Industries, Inc.: *See—*
Kovaleski, Joseph J., 4,298,174, Cl. 242-128.000.
Xerox Corporation: *See—*
Critchlow, James A.; and Ozern, Douna U., 4,298,275, Cl. 355-71.000.
Duvall, William S.; and English, William K., 4,298,957, Cl. 364-900.000.
Hwa, Stephen C. P., 4,297,972, Cl. 118-658.000.
Lu, Chin H., 4,298,672, Cl. 430-108.000.
Silverberg, Morton, 4,298,277, Cl. 355-76.000.
Yagi, Hideyuki: *See—*
Sakurada, Shuroku; Nakashima, Yoichi; Kojima, Isao; Yagi, Hideyuki; Kariya, Tadaaki; and Sugiyama, Masayoshi, 4,298,881, Cl. 357-38.000.

Yamada, Yujiro: *See—*
Amano, Shoichi; Miyadoh, Shinji; Takahashi, Saeko; Ezaki, Norio; Niwa, Tomizo; and Yamada, Yujiro, 4,298,599, Cl. 424-119.000.
Yamamoto, Hiroshi: *See—*
Kawamura, Masaharu; Shigeta, Yoshihiro; Uchidoi, Masanori; Sugiura, Yoji; and Yamamoto, Hiroshi, 4,298,256, Cl. 354-23.00D.
Yamamoto, Hitoshi: *See—*
Nishikawa, Masao; and Yamamoto, Hitoshi, 4,298,102, Cl. 188-319.000.
Yamamoto, Kenji: *See—*
Ando, Masato; Yamamoto, Kenji; and Taniguchi, Kazuhiro, 4,298,446, Cl. 204-224.00R.
Shichijo, Hajime; Yamamoto, Kenji; and Nakazawa, Kenichi, 4,298,851, Cl. 334-11.000.
Yamamoto, Manabu; Murayama, Seiichi; Ito, Masaru; and Oishi, Kounosuke, to Hitachi, Ltd. Method and apparatus for measuring magnetooptic anisotropy. 4,298,284, Cl. 356-368.000.
Yamanaka, Kunio: *See—*
Takaki, Masaoki; Sawano, Hirokazu; Yamanaka, Kunio; Asada, Kazuyoshi; Hideshima, Keiji; and Koyanagi, Haruo, 4,298,958, Cl. 364-900.000.
Yamashita, Masami: *See—*
Asawa, Tatsuro; Miyake, Haruhisa; Yamashita, Masami; and Sugaya, Yoshio, 4,298,699, Cl. 521-31.000.
Yamashita, Mitsuo: *See—*
Yoshimaru, Tomohisa; Sato, Yasuhiro; and Yamashita, Mitsuo, 4,298,269, Cl. 355-3.00R.
Yamazaki, Noboru; Takase, Tsutomu; Morimoto, Yoshio; and Yuasa, Teruo, to Mitsui Toatsu Chemicals Incorporated. Thermosetting resin composition from maleimide compound and alkenyl phenol. 4,298,720, Cl. 526-262.000.
Yan, Tsoung-yuan; and Lozano, Raymond L., to Mobil Oil Corporation. Leach method including means to protect ion exchange resin. 4,298,578, Cl. 423-7.000.
Yanagidaira, Hidetaka: *See—*
Kawai, Kazuo; Yanagidaira, Hidetaka; and Tamori, Michitoshi, 4,298,983, Cl. 375-12.000.
Yang, Hung H., to Du Pont de Nemours, E. I., and Company. Spinning process. 4,298,565, Cl. 264-181.000.
Yasuda, Shinichiro: *See—*
Ghba, Kenjiro; Izumi, Kaichi; and Yasuda, Shinichiro, 4,298,489, Cl. 252-78.500.
Yasuda, Yoshinobu: *See—*
Kimata, Kei; Yasuda, Yoshinobu; Yoshida, Isamu; and Saruta, Masahiro, 4,297,981, Cl. 123-454.000.
Yates, George A., to Eagle-Picher Industries, Inc. Drill head. 4,298,073, Cl. 173-22.000.
Yeda Research and Development Company, Ltd.: *See—*
Allingham, Yael; and Vofsi, David, 4,298,384, Cl. 106-18.340.
Levin, Gideon; and Vofsi, David, 4,298,714, Cl. 525-330.000.
Yelnosky, John: *See—*
Condouris, George A.; Yelnosky, John; Riley, Richard L.; Won, Chong M.; Douglas, George H.; and Studt, William L., 4,298,608, Cl. 424-249.000.
Yesair, David W.: *See—*
Sears, Barry; and Yesair, David W., 4,298,594, Cl. 424-19.000.
Yokogawa Electric Works, Ltd.: *See—*
Ikeda, Kyoichi; and Ando, Motoyoshi, 4,297,872, Cl. 73-32.00A.
Yokota, Shozo: *See—*
Arai, Yoshio; Kataoka, Hiroyuki; Suzuki, Isao; and Yokota, Shozo, 4,298,895, Cl. 358-284.000.
Yoshida, Isamu: *See—*
Kimata, Kei; Yasuda, Yoshinobu; Yoshida, Isamu; and Saruta, Masahiro, 4,297,981, Cl. 123-454.000.
Yoshida Kogyo, K.K.: *See—*
Takahashi, Kihei; Terada, Seiko; and Nakada, Kiyoshi, 4,298,033, Cl. 139-450.000.
Yoshida, Takao, to International Flavors & Fragrances Inc. Neophyl manganese chloride. 4,298,542, Cl. 260-429.00R.
Yoshimaru, Tomohisa; Sato, Yasuhiro; and Yamashita, Mitsuo, to Tokyo Shibaura Denki Kabushiki Kaisha. Recordable reader printer and electrostatic copier. 4,298,269, Cl. 355-3.00R.
Yoshimura, Shigeru; Nomura, Akihiro; and Hayakawa, Kimiaki, to Canon Kabushiki Kaisha. Copying apparatus having an original feeding mechanism. 4,298,279, Cl. 355-133.000.
Youn, Kun C.; and Wilpers, Dale J., to Shell Oil Company. Process for oilseed extraction with an isopropanol-based solvent. 4,298,540, Cl. 260-412.400.
Young, James E., to Emerson Electric Co. Field replaceable electrode assembly for magnetic flowmeter. 4,297,897, Cl. 73-861.120.
Young, Lewis B., to Mobil Oil Corporation. Preparation of improved alkylphenylsulfonates. 4,298,547, Cl. 260-505.00A.
Yuasa, Teruo: *See—*
Yamazaki, Noboru; Takase, Tsutomu; Morimoto, Yoshio; and Yuasa, Teruo, 4,298,720, Cl. 526-262.000.
Zagaroli & Company: *See—*
Zagaroli, David, 4,297,952, Cl. 108-83.000.
Zagaroli, David, to Zagaroli & Company. Expandable table. 4,297,952, Cl. 108-83.000.
Zahid, Abduz, to Greer Hydraulics, Incorporated. Pressure pulse dampener device. 4,298,029, Cl. 138-30.000.
Zahner, John C.: *See—*
Schoennagel, Hans-Juergen; and Zahoer, John C., 4,298,453, Cl. 208-10.000.
Zahnraderfabrik Renk Aktiengesellschaft: *See—*
Bauer, Erwin; Davida, Ralf; Gotz, Gerhard; Jussen, Hilmar; Arndt, Heinrich; Kummel, Louis; Morhart, Rudolf; and Pollak-Banda, Erich, 4,297,917, Cl. 74-665.00G.
Zaidan Hojin Biseibutsu Kagaku KenkyuKai: *See—*
Umezawa, Hamao; Umezawa, Sumio; Tsuchiya, Tsutomu; Jikahara, Tomo; and Miyake, Toshiaki, 4,298,727, Cl. 536-10.000.
Zaidan Hojin Handotai Kenkyu Shinkokai: *See—*
Okuno, Yasuo, 4,298,869, Cl. 340-782.000.
Zambrano, Adolfo R., to Hanna Mining Company, The. Production of high purity and high surface area magnesium oxide. 4,298,379, Cl. 75-82.000.
Zampino, Arthur T.; and Zampino, Dolores V. Combination feeding tray and play table. 4,298,228, Cl. 297-182.000.
Zampino, Dolores V.: *See—*
Zampino, Arthur T.; and Zampino, Dolores V., 4,298,228, Cl. 297-182.000.
Zarbos, Catherine. Torso garment incorporating removable hand coverings. 4,297,746, Cl. 2-108.000.
Zecher, Wilfried: *See—*
Lewalter, Jurgen; Rottmaier, Ludwig; Merten, Rudolf; Zecher, Wilfried; Dunwald, Willi; and Schulte, Bernhard, 4,298,515, Cl. 260-30.40N.
Zeigner, Willard L.: *See—*
Blaney, Peter G.; Conley, Dwain D.; and Zeigner, Willard L., 4,297,899, Cl. 73-861.580.
Zeitlin, Robert J.: *See—*
Machonis, John, Jr.; Schmukler, Seymour; Zeitlin, Robert J.; and Shida, Mitsuzo, 4,298,712, Cl. 525-74.000.
Zelenka, Leslie R.: *See—*
Arter, Nelson K.; Devore, Ernest W.; Wills, Arthur B.; and Zelenka, Leslie R., 4,298,897, Cl. 360-39.000.
Zelentsov, Boris N.: *See—*
Avdeenko, Boris K.; Bronfman, Aron I.; Vitkin, Alexandr L.; Zelentsov, Boris N.; Kinevsky, Valery N.; and Rozet, Vladimir E., 4,298,900, Cl. 361-127.000.
Zeller, Norbert: *See—*
Schinabeck, Anton; Zeller, Norbert; Lindner, Tassilo; Engelsberger, Georg; and Riedle, Rudolf, 4,298,753, Cl. 556-415.000.
Zemco, Inc.: *See—*
Blaney, Peter G.; Conley, Dwain D.; and Zeigner, Willard L., 4,297,899, Cl. 73-861.580.
Zenith Radio Corporation: *See—*
Ishihara, Theodore M.; and Kulkens, John P., 4,298,815, Cl. 313-325.000.
Lai, Stephen; and Srivastava, Gopal K., 4,298,890, Cl. 358-158.000.
Reneau, Daniel L., 4,298,884, Cl. 358-26.000.
Zhirnov, Nikolai Y.: *See—*
Batalin, Oleg E.; Dykman, Arkady S.; Osadchenko, Alexandr I.; Balkhanova, Galina F.; Belgorodsky, Izrail M.; Nevstruev, Vladimir I.; Radionov, Valery A.; Tulchinsky, Eduard A.; Belyaev, Valentin M.; Smolin, Jury I.; Breiman, Mark I.; Orlyansky, Vitaly V.; Zhirnov, Nikolai Y.; Galibin, Nikolai V.; Troitsky, Adrian P.; and Kovalenko, Vladimir V., 4,298,503, Cl. 252-432.000.
Zimmer, Ernst, to Industrie-Werke Karlsruhe Augsburg Aktiengesellschaft. Leverage system. 4,297,908, Cl. 74-469.000.
Zimmerman, C. Lyle. Basement dewatering system. 4,298,294, Cl. 405-37.000.
Zimmerman, Robert L.: *See—*
Schulze, Heinz; Zimmerman, Robert L.; and Naylor, Carter G., 4,298,708, Cl. 521-115.000.
Zimmermann, Andreas: *See—*
Muller, Klaus; and Zimmermann, Andreas, 4,298,448, Cl. 204-299.00R.
Zodrow, Rudolf, to Jagenberg-Werke AG. Labelling machine. 4,298,422, Cl. 156-568.000.
Zoecon Corporation: *See—*
Lee, Shy-Fuh, 4,298,760, Cl. 562-506.000.
Zoller, Christopher J.: *See—*
Mahnke, Earl A.; and Zoller, Christopher J., 4,298,864, Cl. 340-657.000.
Zuniga, Julio A. Box spring and mattress support device. 4,297,754, Cl. 5-411.000.
Zvyagin, Mikhail S.: *See—*
Bochkarev, Ellin P.; Prokopov, Igor V.; Eljutin, Alexandr V.; Belsky, Arkady A.; Baryshnikova, Svetlana M.; Nasyrov, Nail Z.; Novikov, Nikolai A.; Khairulin, Edige R.; Zvyagin, Mikhail S.; Abrjutin, Vladimir N.; Konstantinova, Ljubov I.; Ljubimova, Nina A.; and Gorbacheva, Nadezhda S., 4,298,380, Cl. 75-101.0BE.

LIST OF REISSUE PATENTEES

TO WHOM

PATENTS WERE ISSUED ON THE 3RD DAY OF NOVEMBER, 1981

NOTE.—Arranged in accordance with the first significant character or word of the name (in accordance with city and telephone directory practice).

Du Pont de Nemours, E. I., and Company: *See—*
  Pilgrim, James F.; and Hunter, Ronald A., Re. 30,789, Cl. 427-358.000.
Hunter, Ronald A.: *See—*
  Pilgrim, James F.; and Hunter, Ronald A., Re. 30,789, Cl. 427-358.000.
Pilgrim, James F.; and Hunter, Ronald A., to Du Pont de Nemours, E. I., and Company. Process for coating sheet substrates with thermoplastic polymer. Re. 30,789, Cl. 427-358.000.
Pool, Danny L.; and Pool, Robert R. Hand held masking machine. Re. 30,787, Cl. 156-527.000.
Pool, Robert R.: *See—*
  Pool, Danny L.; and Pool, Robert R., Re. 30,787, Cl. 156-527.000.
Wiebe, Gerald L. Disposable identification band blank. Re. 30,786, Cl. 40-21.00C.

LIST OF DESIGN PATENTEES

Abe, Takeshi: *See—*
  Seki, Yasusuke; and Abe, Takeshi, 261,643, Cl. D14-5.000.
Abraham, Anthony S., to Lever Brothers Company. Soap or detergent tablet. 261,691, 11-3-81, Cl. D28-8.100.
Aktiebolaget Cloetta: *See—*
  Svensson, Thure; and Brandstrom, Jan, 261,656, Cl. D15-111.000.
Alber, Friedrich; Altmann, Gerhard; Bendel, Wolfgang; Dedelmahr, Rudolf; Eyrich, Hermann; Link, Rudolf; and Seeliger, Klaus, to Transormatoren Union Aktiengesellschaft. Coupling transformer. 261,640, 11-3-81, Cl. D13-4.000.
Albertson, Robert V. Ratchet wrench fulcrum ring. 261,607, 11-3-81, Cl. D8-25.000.
Altmann, Gerhard: *See—*
  Alber, Friedrich; Altmann, Gerhard; Bendel, Wolfgang; Dedelmahr, Rudolf; Eyrich, Hermann; Link, Rudolf; and Seeliger, Klaus, 261,640, Cl. D13-4.000.
American Hospital Supply Corporation: *See—*
  Herbst, Walter B., 261,586, Cl. D7-16.000.
  Herbst, Walter B., 261,587, Cl. D7-16.000.
  Herbst, Walter B., 261,589, Cl. D7-38.000.
  Herbst, Walter B., 261,590, Cl. D7-40.000.
  Herbst, Walter B., 261,591, Cl. D7-40.000.
Anderson, Howard A., to Cities Service Company. Dish pan. 261,602, 11-3-81, Cl. D32-55.000.
Asher, James C.: *See—*
  McKinsey, Kevin P.; and Asher, James C., 261,644, Cl. D14-11.000.
Atari, Inc.: *See—*
  McKinsey, Kevin P.; and Asher, James C., 261,644, Cl. D14-11.000.
Audesse, Emery G.; and Hartman, Donald W., to GTE Products Corporation. Linear mnltilamp photoflash unit. 261,683, 11-3-81, Cl. D26-2.000.
Aulenti, Gae, to Knoll International, Inc. Chair. 261,580, 11-3-81, Cl. D6-66.000.
Austin, John J., Jr., to Champion International Corporation. Carton. 261,617, 11-3-81, Cl. D9-432.000.
B. F. Goodrich Company, The: *See—*
  Skerl, Richard J., 261,635, Cl. D12-147.000.
  Skerl, Richard J., 261,636, Cl. D12-147.000.
Babb, Burton A. Loudspeaker. 261,642, 11-3-81, Cl. D14-30.000.
Babb, Burton A. Loudspeaker. 261,645, 11-3-81, Cl. D14-30.000.
Bachmann, Hans. Garbage compactor. 261,658, 11-3-81, Cl. D15-123.000.
Bane, John H., III. Space heating stove. 261,675, 11-3-81, Cl. D23-97.000.
Beck, Robert F., Jr. Campfire cook stand. 261,596, 11-3-81, Cl. D7-109.000.
Bedwell, Bernice. Eyeglasses. 261,662, 11-3-81, Cl. D16-104.000.
Bendel, Wolfgang: *See—*
  Alber, Friedrich; Altmann, Gerhard; Bendel, Wolfgang; Dedelmahr, Rudolf; Eyrich, Hermann; Link, Rudolf; and Seeliger, Klaus, 261,640, Cl. D13-4.000.
Bernard Industries Co.: *See—*
  Yellin, Bernard, 261,595, Cl. D7-99.000.
Beshears, Terry W. Roofing roll dispenser. 261,634, 11-3-81, Cl. D34-24.000.
Blanchard, Russell O.; Guzek, Joseph; and Matt, Donald A., to Motor Wheel Corporation. Wheel. 261,637, 11-3-81, Cl. D12-209.000.
Blanchard, Russell O.; Guzek, Joseph; and Matt, Donald A., to Motor Wheel Corporation. Wheel. 261,638, 11-3-81, Cl. D12-209.000.
Boldt, Melvin H.; Morrison, Thurber H.; and Greb, Francis J., to National Presto Industries, Inc. Egg cooker. 261,594, 11-3-81, Cl. D7-94.000.
Borkan, Florence, to Pharmacaps, Inc. Combined bottle cap and capsule piercing device. 261,619, 11-3-81, Cl. D9-437.000.
Brandstrom, Jan: *See—*
  Svensson, Thure; and Brandstrom, Jan, 261,656, Cl. D15-111.000.
Brannock, Thomas L. Load binder release tool. 261,611, 11-3-81, Cl. D8-89.000.
Brun, George F., Jr.: *See—*
  Ogg, Elmer E., Jr.; and Brun, George F., Jr., 261,668, Cl. D19-92.000.
Buchanan, Edward B. Fishing rod holder. 261,581, 11-3-81, Cl. D6-125.000.
Champion International Corporation: *See—*
  Austin, John J., Jr., 261,617, Cl. D9-432.000.
  Scott, Raymond G.; and Wysocki, Lawrence S., 261,620, Cl. D9-438.000.
Chandler, John W. Orthopedic pillow. 261,681, 11-3-81, Cl. D24-64.000.
Charland, Terrence D.; Newcomh, Dean R.; and Robertson, Donald A., to Xerox Corporation. Copying machine. 261,661, 11-3-81, Cl. D16-31.000.
Cities Service Company: *See—*
  Anderson, Howard A., 261,602, Cl. D32-55.000.
Coburn, Orin W.: *See—*
  Maloy, Rex M., 261,664, Cl. D18-3.000.
Cohen, Aaron G.: *See—*
  Melzian, John M.; Cohen, Aaron G.; and Nuttall, Mike, 261,670, Cl. D21-64.000.
Collister, Kenneth D.; Krou, Michael A.; and Werner, Raymond M., to Miles Laboratories, Inc. Reflectance colorimeter. 261,623, 11-3-81, Cl. D10-46.000.
Coulter Systems Corporation: *See—*
  Forrest, Jess; and Hardy, Carl D., 261,660, Cl. D16-31.000.
Dedelmahr, Rudolf: *See—*
  Alber, Friedrich; Altmann, Gerhard; Bendel, Wolfgang; Dedelmahr, Rudolf; Eyrich, Hermann; Link, Rudolf; and Seeliger, Klaus, 261,640, Cl. D13-4.000.
deHaseth, John, to Jonee, Inc. Combined brush and mirror. 261,693, 11-3-81, Cl. D28-68.000.
Delgado, Elsa L.; and Pinera, Julia M. Desk pen set holder. 261,665, 11-3-81, Cl. D19-77.000.
Deschamps, Robert L., to Shure Brothers, Inc. Power console. 261,652, 11-3-81, Cl. D14-96.000.
Docan Corporatinn: *See—*
  Doheny, Kevin L., 261,629, Cl. D10-106.000.
Doheny, Kevin L., to Docan Corporation. Emergency brake warning device. 261,629, 11-3-81, Cl. D10-106.000.
Enders, Roy L. Hide-a-bed mover clamp. 261,584, 11-3-81, Cl. D6-198.000.
Enduro Corporation: *See—*
  Kettlestrings, John S., 261,601, Cl. D32-40.000.

Eyrich, Hermann: *See—*
  Alber, Friedrich; Altmann, Gerhard; Bendel, Wolfgang; Dedelmahr, Rudolf; Eyrich, Hermann; Link, Rudolf; and Seeliger, Klaus, 261,640, Cl. D13-4.000.
Farino, Robert J. Angle converter. 261,625, 11-3-81, Cl. D10-65.000.
Fear, Jeffrey R. Combined stool and footrest. 261,575, 11-3-81, Cl. D6-35.000.
Fee, Robert W.; Ten Eyck, Richard E.; and Smith, Lloyd T., to S/V Tool Company, Inc. Hand implement. 261,610, 11-3-81, Cl. D8-82.000.
Feuling, James J. Mounting stand for attaching an accessory to an engine. 261,654, 11-3-81, Cl. D15-5.000.
Fichte, Heinrich. Serving tray unit. 261,588, 11-3-81, Cl. D7-38.000.
Fisher, Carlman: *See—*
  Gordon, Andrew W.; and Fisher, Carlman, 261,570, Cl. D2-318.000.
Forbes, Hampton E., Jr., to Westvaco Corporation. Bottled alcoholic beverage carton. 261,613, 11-3-81, Cl. D9-418.000.
Forrest, Jess; and Hardy, Carl D., to Coultet Systems Corporation. Photoprinting machine. 261,660, 11-3-81, Cl. D16-31.000.
Fukano, Katsuhito; and Mawake, Yukio, to Mitutoyo Mfg., Co., Ltd. Three-dimensional coordinate measuring instrument. 261,624, 11-3-81, Cl. D10-46.000.
Gagliano, Stephen J. Winged sculpture. 261,633, 11-3-81, Cl. D11-162.000.
Gannon, Robert E.: *See—*
  Tesar, Robert J.; and Gannon, Robert E., 261,616, Cl. D9-415.000.
Gardisette International AG: *See—*
  Stocker, Hans, 261,694, Cl. D47-6.00E.
Genaro, Donald M.; McGarvey, John N.; and Novak, Lajos, to Western Electric Company, Inc. Combined telephone kiosk and support therefor. 261,582, 11-3-81, Cl. D6-181.000.
General Electric Company: *See—*
  Kolwaite, John S., 261,651, Cl. D14-73.000.
George, Wilfred R. Newspaper grate. 261,603, 11-3-81, Cl. D7-207.000.
Gordon, Andrew W.; and Fisher, Carlman, to Northern Shoe Bindings Co., Inc. Contoured sandal innersole. 261,570, 11-3-81, Cl. D2-318.000.
Greb, Francis J.: *See—*
  Boldt, Melvin H.; Morrison, Thurber H.; and Greb, Francis J., 261,594, Cl. D7-94.000.
Greene & Kellogg, Inc.: *See—*
  McCombs, Norman R., 261,676, Cl. D24-8.000.
Griggs, Denis O. Hockey target. 261,667, 11-3-81, Cl. D21-6.000.
GTE Products Corporation: *See—*
  Audesse, Emery G.; and Hartman, Donald W., 261,683, Cl. D26-2.000.
Gunnell, Carl F., III. Pump flange tool. 261,608, 11-3-81, Cl. D8-27.000.
Guzek, Joseph: *See—*
  Blanchard, Russell O.; Guzek, Joseph; and Matt, Donald A., 261,637, Cl. D12-209.000.
  Blanchard, Russell O.; Guzek, Joseph; and Matt, Donald A., 261,638, Cl. D12-209.000.
Hall, Richard, to Technalytics, Inc. Naso-gastric tube stabilizer. 261,680, 11-3-81, Cl. D24-53.000.
Hanson, George A. Tackle caddy. 261,571, 11-3-81, Cl. D3-38.000.
Harada, Toshio: *See—*
  Takahashi, Yoichi; Yamamura, Masamichi; Harada, Toshio; and Inoue, Shigefumi, 261,598, Cl. D7-128.000.
  Takahashi, Yoichi; Itsumi, Kenjiro; Harada, Toshio; and Inoue, Shigefumi, 261,599, Cl. D7-128.000.
Hardy, Carl D.: *See—*
  Forrest, Jess; and Hardy, Carl D., 261,660, Cl. D16-31.000.
Hartman, Donald W.: *See—*
  Audesse, Emery G.; and Hartman, Donald W., 261,683, Cl. D26-2.000.
Henkels, Walter. Combined ruler and letter opener. 261,612, 11-3-81, Cl. D8-104.000.
Herbst, Walter B., to American Hospital Supply Corporation. Covered food tray. 261,586, 11-3-81, Cl. D7-16.000.
Herbst, Walter B., to American Hospital Supply Corporation. Covered food tray. 261,587, 11-3-81, Cl. D7-16.000.
Herbst, Walter B., to American Hospital Supply Corporation. Food tray. 261,589, 11-3-81, Cl. D7-38.000.
Herbst, Walter B., to American Hospital Supply Corporation. Lid for a food tray. 261,590, 11-3-81, Cl. D7-40.000.
Herbst, Walter B., to American Hospital Supply Corporation. Food tray lid. 261,591, 11-3-81, Cl. D7-40.000.
Heritage, Robert, to Steelcase Inc. Chair. 261,576, 11-3-81, Cl. D6-41.000.
Heritage, Robert, to Steelcase Inc. Combined chair, tablet arm and magazine rack. 261,577, 11-3-81, Cl. D6-42.000.
Heritage, Robert, to Steelcase Inc. Combined chair and tablet arm. 261,578, 11-3-81, Cl. D6-42.000.
Heritage, Robert, to Steelcase Inc. Combined chair, tablet arm, ashtray and magazine rack. 261,579, 11-3-81, Cl. D6-42.000.
Hitachi, Ltd.: *See—*
  Seki, Yasusuke; and Abe, Takeshi, 261,643, Cl. D14-5.000.
Hoffman, Luther A., to Sharpoint Inc. Suture packaging element. 261,621, 11-3-81, Cl. D9-456.000.
Honex Corporation: *See—*
  Hoover, Sidney H., 261,682, Cl. D25-16.000.
Hoover, Sidney H., to Honex Corporation. Density measurement enclosure for the human body. 261,682, 11-3-81, Cl. D25-16.000.
Imada, Michio, to Olympus Optical Company Ltd. Electrophotographic copier. 261,659, 11-3-81, Cl. D16-31.000.
Immel, David. Statuette. 261,631, 11-3-81, Cl. D11-131.000.
Inoue, Shigefumi: *See—*
  Takahashi, Yoichi; Yamamura, Masamichi; Harada, Toshio; and Inoue, Shigefumi, 261,598, Cl. D7-128.000.
  Takahashi, Yoichi; Itsumi, Kenjiro; Harada, Toshio; and Inoue, Shigefumi, 261,599, Cl. D7-128.000.
Interdica S.A.: *See—*
  Kaufmann, Albert, 261,615, Cl. D9-337.000.
Inverness International: *See—*
  Mann, Samuel J., 261,678, Cl. D24-26.000.
Itsumi, Kenjiro: *See—*
  Takahashi, Yoichi; Itsumi, Kenjiro; Harada, Toshio; and Inoue, Shigefumi, 261,599, Cl. D7-128.000.
Jonee, Inc.: *See—*
  deHaseth, John, 261,693, Cl. D28-68.000.
Kabushiki Kaisha Miyazaki Seisakusho: *See—*
  Miyazaki, Toshio, 261,593, Cl. D7-78.000.
Karkanen, Gerald E. Bowling trophy. 261,632, 11-3-81, Cl. D11-157.000.
Kaufmann, Albert, to Interdica S.A. Perfume bottle. 261,615, 11-3-81, Cl. D9-337.000.
Kettlestrings, John S., to Enduro Corporation. Pan cleaner or similar article. 261,601, 11-3-81, Cl. D32-40.000.
Knoll International, Inc.: *See—*
  Aulenti, Gae, 261,580, Cl. D6-66.000.
Kolwaite, John S., to General Electric Company. Clock radio or similar article. 261,651, 11-3-81, Cl. D14-73.000.
Krou, Michael A.: *See—*
  Collister, Kenneth D.; Krou, Michael A.; and Werner, Raymond M., 261,623, Cl. D10-46.000.
Kuramoto, Takeo, to Kyoritsu Electrical Instruments Works, Ltd. Volt-ohm-ammeter or the like. 261,627, 11-3-81, Cl. D10-79.000.
Kustom Electronics, Inc.: *See—*
  Uzzell, William D., 261,641, Cl. D13-38.000.
Kvasnicka, Donald A. Wall lamp. 261,685, 11-3-81, Cl. D26-87.000.
Kvasnicka, Donald A. Table lamp. 261,686, 11-3-81, Cl. D26-93.000.
Kvasnicka, Donald A. Table lamp. 261,687, 11-3-81, Cl. D26-93.000.
Kvasnicka, Donald A. Floor lamp. 261,688, 11-3-81, Cl. D26-102.000.
Kyoritsu Electrical Instruments Works, Ltd.: *See—*
  Kuramoto, Takeo, 261,627, Cl. D10-79.000.
Labasan, Manuel C. Holder for bar accessories. 261,583, 11-3-81, Cl. D6-189.000.
La Fargo, Mark J.; and Pomponio, Robert V. Wheel hub locking tool. 261,606, 11-3-81, Cl. D8-21.000.
Langtry, Robert S. Barbecue cowl. 261,600, 11-3-81, Cl. D7-129.000.
Lattimore, Richard. Combined room divider, television cabinet, stereo cabinet, bar and aquarium support unit. 261,573, 11-3-81, Cl. D6-4.000.
Lawrence, Frederick J., to Nashua Corporation. Sorting apparatus. 261,653, 11-3-81, Cl. D14-110.000.
Lawson, Frank H. Wind instrument. 261,663, 11-3-81, Cl. D17-10.000.
Lever Brothers Company: *See—*
  Abraham, Anthony S., 261,691, Cl. D28-8.100.
Link, Rudolf: *See—*
  Alber, Friedrich; Altmann, Gerhard; Bendel, Wolfgang; Dedelmahr, Rudolf; Eyrich, Hermann; Link, Rudolf; and Seeliger, Klaus, 261,640, Cl. D13-4.000.
Livesey, James R., to Mattel, Inc. Toy play case or similar article. 261,671, 11-3-81, Cl. D21-109.000.
Locoste Alligator S.A.: *See—*
  Pelavin, Joseph Y.; and Locoste, Rene, 261,572, Cl. D3-71.000.
Locoste, Rene: *See—*
  Pelavin, Joseph Y.; and Locoste, Rene, 261,572, Cl. D3-71.000.
Lovejoy, Sharon A. Portable head rest. 261,574, 11-3-81, Cl. D6-29.000.
Luwe, Bernd U., to Motorola, Inc. Belt mounted remote radio transmitter for signalling an operator of heavy equipment. 261,630, 11-3-81, Cl. D10-121.000.
Maloy, Rex M., to Coburn, Orin W. Coin separator assembly. 261,664, 11-3-81, Cl. D18-3.000.
Mann, Samuel J., to Inverness International. Electrolysis hair removal apparatus. 261,678, 11-3-81, Cl. D24-26.000.
Marquez, David A.; and Marquez, Perfecto J. Clock. 261,622, 11-3-81, Cl. D10-6.000.
Marquez, Perfecto J.: *See—*
  Marquez, David A.; and Marquez, Perfecto J., 261,622, Cl. D10-6.000.
Matsushita Electric Industrial Co., Ltd.: *See—*
  Takahashi, Yoichi; Yamamura, Masamichi; Harada, Toshio; and Inoue, Shigefumi, 261,598, Cl. D7-128.000.
  Takahashi, Yoichi; Itsnmi, Kenjiro; Harada, Toshio; and Inoue, Shigefumi, 261,599, Cl. D7-128.000.
Matt, Donald A.: *See—*
  Blanchard, Russell O.; Guzek, Joseph; and Matt, Donald A., 261,637, Cl. D12-209.000.
  Blanchard, Russell O.; Gnzek, Joseph; and Matt, Donald A., 261,638, Cl. D12-209.000.
Mattel, Inc.: *See—*
  Livesey, James R., 261,671, Cl. D21-109.000.
  Melzian, John M.; Cohen, Aaron G.; and Nuttall, Mike, 261,670, Cl. D21-64.000.
  Tran, Luan G.; and Mayer, Edward, 261,669, Cl. D21-13.000.
Mawake, Yukio: *See—*
  Fukano, Katsuhito; and Mawake, Yukio, 261,624, Cl. D10-46.000.
Mayer, Edward: *See—*
  Tran, Luan G.; and Mayer, Edward, 261,669, Cl. D21-13.000.

McCombs, Norman R., to Greene & Kellogg, Inc. Compact oxygen concentrator. 261,676, 11-3-81, Cl. D24-8.000.
McGarvey, John N.: *See*—
Genaro, Donald M.; McGarvey, John N.; and Novak, Lajos, 261,582, Cl. D6-181.000.
McKinsey, Kevin P.; and Asher, James C., to Atari, Inc. Memory module housing. 261,644, 11-3-81, Cl. D14-11.000.
Mead Corporation, The: *See*—
Oliff, James R.; and Watkins, Richard K., 261,618, Cl. D9-433.000.
Melzian, John M.; Cohen, Aaron G.; and Nuttall, Mike, to Mattel, Inc. Toy calliope or similar article. 261,670, 11-3-81, Cl. D21-64.000.
Miles Laboratories, Inc.: *See*—
Collister, Kenneth D.; Krou, Michael A.; and Werner, Raymond M., 261,623, Cl. D10-46.000.
Mitutoyo Mfg., Co., Ltd.: *See*—
Fukano, Katsuhito; and Mawake, Yukio, 261,624, Cl. D10-46.000.
Miyake, Takao: *See*—
Suganoya, Yoshio; and Miyake, Takao, 261,597, Cl. D7-128.000.
Miyazaki, Toshio, to Kabushiki Kaisha Miyazaki Seisakusho. Ice pail. 261,593, 11-3-81, Cl. D7-78.000.
Morrison, Thurber H.: *See*—
Boldt, Melvin H.; Morrison, Thurber H.; and Greb, Francis J., 261,594, Cl. D7-94.000.
Motor Wheel Corporation: *See*—
Blanchard, Russell O.; Guzek, Joseph; and Matt, Donald A., 261,637, Cl. D12-209.000.
Blanchard, Russell O.; Guzek, Joseph; and Matt, Donald A., 261,638, Cl. D12-209.000.
Motorola, Inc.: *See*—
Luwe, Bernd U., 261,630, Cl. D10-121.000.
Murray, Joseph E., Jr. Smoking pipe. 261,690, 11-3-81, Cl. D27-3.000.
Nashua Corporation: *See*—
Lawrence, Frederick J., 261,653, Cl. D14-110.000.
National Presto Industries, Inc.: *See*—
Boldt, Melvin H.; Morrison, Thurber H.; and Greb, Francis J., 261,594, Cl. D7-94.000.
Neeley, Michael J. Evacuator tip. 261,677, 11-3-81, Cl. D24-10.000.
New Balance Unlimited: *See*—
Ogg, Elmer E., Jr.; and Brun, George F., Jr., 261,668, Cl. D19-92.000.
Newcomb, Dean R.: *See*—
Charland, Terrence D.; Newcomb, Dean R.; and Robertson, Donald A., 261,661, Cl. D16-31.000.
Nice, Gerald W. Extension for gasoline dispensing nozzle. 261,674, 11-3-81, Cl. D23-37.000.
Noble, Edward D. Case for chiropractic vibrator. 261,679, 11-3-81, Cl. D24-41.000.
Northern Shoe Bindings Co., Inc.: *See*—
Gordon, Andrew W.; and Fisher, Carlman, 261,570, Cl. D2-318.000.
Novak, Lajos: *See*—
Genaro, Donald M.; McGarvey, John N.; and Novak, Lajos, 261,582, Cl. D6-181.000.
Nuttall, Mike: *See*—
Melzian, John M.; Cohen, Aaron G.; and Nuttall, Mike, 261,670, Cl. D21-64.000.
O'Brien, Josephine A. Curling iron. 261,692, 11-3-81, Cl. D28-35.000.
Ogg, Elmer E., Jr.; and Brun, George F., Jr., to New Balance Unlimited. Combined holder and transfer tray for bank checks. 261,668, 11-3-81, Cl. D19-92.000.
Oliff, James R.; and Watkins, Richard K., to Mead Corporation, The. Article carrier blank. 261,618, 11-3-81, Cl. D9-433.000.
Olympus Optical Company Ltd.: *See*—
Imada, Michio, 261,659, Cl. D16-31.000.
Pansini, Andrew L. Head for a swimming pool cleaner. 261,655, 11-3-81, Cl. D32-32.000.
Pelavin, Joseph Y.; and Locoste, Rene, to Locoste Alligator S.A. Luggage bag. 261,572, 11-3-81, Cl. D3-71.000.
Perrin, George S., to Plastic Research & Development Corp. Fishing lure. 261,673, 11-3-81, Cl. D22-27.000.
Pharmacaps, Inc.: *See*—
Borkan, Florence, 261,619, Cl. D9-437.000.
Phillippe, Maurice P., to Tyrrell Racing Organisation Limited. Model racing car. 261,672, 11-3-81, Cl. D21-137.000.
Pinera, Julia M.: *See*—
Delgado, Elsa L.; and Pinera, Julia M., 261,665, Cl. D19-77.000.
Plastic Research & Development Corp.: *See*—
Perrin, George S., 261,673, Cl. D22-27.000.
Pomponio, Robert V.: *See*—
La Fargo, Mark J.; and Pomponio, Robert V., 261,606, Cl. D8-21.000.
Qume Corporation: *See*—
Stirling, Loren D., 261,646, Cl. D14-114.000.
Rexham Corporation: *See*—
Tesar, Robert J.; and Gannon, Robert E., 261,616, Cl. D9-415.000.
Robertson, Donald A.: *See*—
Charland, Terrence D.; Newcomb, Dean R.; and Robertson, Donald A., 261,661, Cl. D16-31.000.
Robinson, Alan J. Water-driven electricity generator. 261,639, 11-3-81, Cl. D13-2.000.
Roux, Pierre. Vise. 261,609, 11-3-81, Cl. D8-74.000.
S/V Tool Company, Inc.: *See*—
Fee, Robert W.; Ten Eyck, Richard E.; and Smith, Lloyd T., 261,610, Cl. D8-82.000.
Schaeffer, Daniel D. Alarm system control unit. 261,628, 11-3-81, Cl. D10-106.000.
Scott, Raymond G.; and Wysocki, Lawrence S., to Champion International Corporation. Container cover. 261,620, 11-3-81, Cl. D9-438.000.
Seeliger, Klaus: *See*—
Alber, Friedrich; Altmann, Gerhard; Bendel, Wolfgang; Dedelmahr, Rudolf; Eyrich, Hermann; Link, Rudolf; and Seeliger, Klaus, 261,640, Cl. D13-4.000.
Seki, Yasusuke; and Abe, Takeshi, to Hitachi, Ltd. Combined cassette recorder, radio and television. 261,643, 11-3-81, Cl. D14-5.000.
Sharp Corporation: *See*—
Suganoya, Yoshio; and Miyake, Takao, 261,597, Cl. D7-128.000.
Sharpoint Inc.: *See*—
Hoffman, Luther A., 261,621, Cl. D9-456.000.
Shure Brothers, Inc.: *See*—
Deschamps, Robert L., 261,652, Cl. D14-96.000.
Skerl, Richard J., to B. F. Goodrich Company, The. Tire. 261,635, 11-3-81, Cl. D12-147.000.
Skerl, Richard J., to B. F. Goodrich Company, The. Tire. 261,636, 11-3-81, Cl. D12-147.000.
Smith, Donald B. Picture display frame. 261,585, 11-3-81, Cl. D6-234.000.
Smith, Lloyd T.: *See*—
Fee, Robert W.; Ten Eyck, Richard E.; and Smith, Lloyd T., 261,610, Cl. D8-82.000.
Sorin, Andrei. Backgammon calculator. 261,666, 11-3-81, Cl. D21-13.000.
Standard-Keil Hardware Manufacturing Co.: *See*—
Villa, Joseph N., 261,657, Cl. D15-118.000.
Steelcase Inc.: *See*—
Heritage, Robert, 261,576, Cl. D6-41.000.
Heritage, Robert, 261,577, Cl. D6-42.000.
Heritage, Robert, 261,578, Cl. D6-42.000.
Heritage, Robert, 261,579, Cl. D6-42.000.
Stirling, Loren D., to Qume Corporation. Sheet feeder. 261,646, 11-3-81, Cl. D14-114.000.
Stocker, Hans, to Gardisette International AG. Curtain material. 261,694, 11-3-81, Cl. D47-6.00E.
Suganoya, Yoshio; and Miyake, Takao, to Sharp Corporation. Microwave oven. 261,597, 11-3-81, Cl. D7-128.000.
Svensson, Thure; and Brandstrom, Jan, to Aktiebolaget Cloetta. Dispenser for lozenges. 261,656, 11-3-81, Cl. D15-111.000.
Takahashi, Yoichi; Yamamura, Masamichi; Harada, Toshio; and Inoue, Shigefumi, to Matsushita Electric Industrial Co., Ltd. Microwave oven. 261,598, 11-3-81, Cl. D7-128.000.
Takahashi, Yoichi; Itsumi, Kenjiro; Harada, Toshio; and Inoue, Shigefumi, to Matsushita Electric Industrial Co., Ltd. Microwave oven. 261,599, 11-3-81, Cl. D7-128.000.
Technalytics, Inc.: *See*—
Hall, Richard, 261,680, Cl. D24-53.000.
Ten Eyck, Richard E.: *See*—
Fee, Robert W.; Ten Eyck, Richard E.; and Smith, Lloyd T., 261,610, Cl. D8-82.000.
Tesar, Robert J.; and Gannon, Robert E., to Rexham Corporation. Combined display and packaging container. 261,616, 11-3-81, Cl. D9-415.000.
Thomas, Wesley L. Telephone. 261,647, 11-3-81, Cl. D14-53.000.
Thomas, Wesley L. Telephone. 261,648, 11-3-81, Cl. D14-53.000.
Thomas, Wesley L. Telephone. 261,649, 11-3-81, Cl. D14-53.000.
Toke International, Inc.: *See*—
Weglein, Stephen, 261,689, Cl. D27-3.000.
Tran, Luan G.; and Mayer, Edward, to Mattel, Inc. Electronic game housing or similar article. 261,669, 11-3-81, Cl. D21-13.000.
Transormatoren Union Aktiengesellschaft: *See*—
Alber, Friedrich; Altmann, Gerhard; Bendel, Wolfgang; Dedelmahr, Rudolf; Eyrich, Hermann; Link, Rudolf; and Seeliger, Klaus, 261,640, Cl. D13-4.000.
Tyrrell Racing Organisation Limited: *See*—
Phillippe, Maurice P., 261,672, Cl. D21-137.000.
U.S. Philips Corporation: *See*—
van de Ven, Peter H. J., 261,650, Cl. D14-70.000.
Uzzell, William D., to Kustom Electronics, Inc. Switch operated hand set for use with traffic radar devices or the like. 261,641, 11-3-81, Cl. D13-38.000.
Vallone, Gregory J. Playing card box. 261,614, 11-3-81, Cl. D9-311.000.
VanderWerf, Robert H. Corner level. 261,626, 11-3-81, Cl. D10-69.000.
van de Ven, Peter H. J., to U.S. Philips Corporation. Clock radio receiver. 261,650, 11-3-81, Cl. D14-70.000.
Villa, Joseph N., to Standard-Keil Hardware Manufacturing Co. Glass filler. 261,657, 11-3-81, Cl. D15-118.000.
Watkins, Richard K.: *See*—
Oliff, James R.; and Watkins, Richard K., 261,618, Cl. D9-433.000.
Weglein, Stephen, to Toke International, Inc. Combined pipe and stand therefor. 261,689, 11-3-81, Cl. D27-3.000.
Werner, Raymond M.: *See*—
Collister, Kenneth D.; Krou, Michael A.; and Werner, Raymond M., 261,623, Cl. D10-46.000.
Western Electric Company, Inc.: *See*—
Genaro, Donald M.; McGarvey, John N.; and Novak, Lajos, 261,582, Cl. D6-181.000.
Westover, Duane E. Utility light. 261,684, 11-3-81, Cl. D26-63.000.
Westvaco Corporation: *See*—
Forbes, Hampton E., Jr., 261,613, Cl. D9-418.000.
Wilson, Michael C. Coaster-holder for a beverage container. 261,592, 11-3-81, Cl. D7-45.000.

Wright, Thomas E. Charcoal scuttle. 261,604, 11-3-81, Cl. D7-212.000.
Wright, Thomas E. Charcoal scuttle. 261,605, 11-3-81, Cl. D7-212.000.
Wysocki, Lawrence S.: *See*—
Scott, Raymond G.; and Wysocki, Lawrence S., 261,620, Cl. D9-438.000.
Xerox Corporation: *See*—
Charland, Terrence D.; Newcomb, Dean R.; and Robertson, Donald A., 261,661, Cl. D16-31.000.
Yamamura, Masamichi: *See*—
Takahashi, Yoichi; Yamamura, Masamichi; Harada, Toshio; and Inoue, Shigefumi, 261,598, Cl. D7-128.000.
Yellin, Bernard, to Bernard Industries Co. Implement for sliding shelves. 261,595, 11-3-81, Cl. D7-99.000.

LIST OF PLANT PATENTEES

Duffett, William E.: *See*—
Jessel, Walter H., Jr.; and Duffett, William E., 4,785, Cl. 68.000.
Jessel, Walter H., Jr.; and Duffett, William E., 4,786, Cl. 74.000.
Jessel, Walter H., Jr.; and Duffett, William E., to Yoder Brothers, Inc. Geranium plant. 4,785, 11-3-81, Cl. 68.000.
Jessel, Walter H., Jr.; and Duffett, William E., to Yoder Brothers, Inc. Chrysanthemum plant. 4,786, 11-3-81, Cl. 74.000.
Koyama, Albert T.: *See*—
Olmo, Harold P.; and Koyama, Albert T., 4,784, Cl. 47.000.
Olmo, Harold P.; and Koyama, Albert T. Table grape. 4,784, 11-3-81, Cl. 47.000.
Yoder Brothers, Inc.: *See*—
Jessel, Walter H., Jr.; and Duffett, William E., 4,785, Cl. 68.000.
Jessel, Walter H., Jr.; and Duffett, William E., 4,786, Cl. 74.000.

LIST OF DEFENSIVE PUBLICATIONS

APPLICANTS TO WHOM

DEFENSIVE PUBLICATIONS WERE ISSUED ON THE 3RD DAY OF NOVEMBER, 1981

Published at the request of the applicant or owner in accordance with the Notice of Dec. 16, 1969, 869 O. G. 687.

Anantha, Narasipur G.; and Bhatia, Harsaran S. Method for making stable nitride-defined Schottky barrier diodes. T101,201, 11-3-81, Cl. 156-643.000.
Bhatia, Harsaran S.: *See*—
Anantha, Narasipur G.; nnd Bhatia, Harsaran S., T101,201, Cl. 156-643.000.
Furbacher, John H.; Ratledge, Edwin K.; and Ullmann, Richard A. Carburetor idle system air/fuel ratio control. T101,202, 11-3-81, Cl. 261-41.00D.
Goulder, Gordon K.; and Hollander, Edward R., Jr. Molding process. T101,205, 11-3-81, Cl. 264-523.000.
Hampel, Viktor E. Compact fast nuclear reactor using heat pipes. T101,204, 11-3-81, Cl. 376-221.000.
Hollander, Edward R., Jr.: *See*—
Goulder, Gordon K.; and Hollander, Edward R., Jr., T101,205, Cl. 264-523.000.
Norton, Melvin M.: *See*—
Parker, Byron R.; and Norton, Melvin M., T101,203, Cl. 71-29.000.
Orsborn, Jesse H.: *See*—
Ralston, Horace E.; and Orsborn, Jesse H., T101,206, Cl. 56-15.600.
Parker, Byron R.; and Norton, Melvin M. Process for production of granular diammonium phosphate. T101,203, 11-3-81, Cl. 71-29.000.
Ralston, Horace E.; and Orsborn, Jesse H. Cotton harvester. T101,206, 11-3-81, Cl. 56-15.600.
Ratledge, Edwin K.: *See*—
Furbacher, John H.; Ratledge, Edwin K.; and Ullmann, Richard A., T101,202, Cl. 261-41.00D.
Ullmann, Richard A.: *See*—
Furbacher, John H.; Ratledge, Edwin K.; and Ullmann, Richard A., T101,202, Cl. 261-41.00D.

CLASSIFICATION OF PATENTS

ISSUED NOVEMBER 3, 1981

NOTE.—First number, class; second number, subclass; third number, patent number

CLASS 2

108	4,297,746
424	4,297,747

CLASS 3

1	4,297,748
1.5	4,297,749

CLASS 4

247	4,297,750
431	4,297,751

CLASS 5

32	4,297,752
81 C	4,297,753
411	4,297,754
455	4,297,755

CLASS 7

127	4,297,756

CLASS 8

94.26	4,298,344

CLASS 9

4 R	4,297,757
340	4,297,758

CLASS 13

25	4,298,767

CLASS 14

2.6	4,297,759

CLASS 15

79 R	4,297,760
105	4,297,761
257.06	4,297,762

CLASS 16

164	4,297,763

CLASS 17

46	4,297,764
66	4,297,765

CLASS 19

80 R	4,297,766
	4,297,767
113	4,297,768

CLASS 23

230 B	4,298,346
	4,298,347
230 R	4,298,345
	4,298,348

CLASS 24

205.16 R	4,297,770
263 DA	4,297,771

CLASS 28

257	4,297,772

CLASS 29

25.42	4,297,773
157 C	4,297,774
157.3 R	4,297,775
252	4,297,776
420	4,297,777
426.4	4,297,778
446	4,297,779
451	4,297,780
467	4,297,781
571	4,297,782
578	4,297,783
596	4,297,784
611	4,297,785

CLASS 30

382	4,297,786

CLASS 33

144	4,297,787
179.5 R	4,297,788
298	4,297,789
313	4,297,790
367	4,297,791

CLASS 34

12	4,297,792
56	4,297,793
122	4,297,794
239	4,297,795

CLASS 36

28	4,297,796
44	4,297,797
101	4,297,798

CLASS 37

2 R	4,297,799

CLASS 40

21 C	Re.30,786

CLASS 42

49 A	4,297,800
59	4,297,801

CLASS 43

4	4,297,802
7	4,297,803
55	4,297,804
83.5	4,297,805

CLASS 44

1 C	4,298,349
	4,298,350
53	4,298,351
	4,298,352
56	4,298,354
71	4,298,353

CLASS 46

1 C	4,297,806
4	4,297,807
52	4,297,808
74 D	4,297,809

CLASS 47

9	4,297,810
72	4,297,811

CLASS 48

206	4,298,355

CLASS 49

386	4,297,812

CLASS 51

297	4,298,356

CLASS 52

2	4,297,813
81	4,297,814
115	4,297,815
125	4,297,816
169.6	4,297,817
199	4,297,818
293	4,297,819
309.11	4,297,820
317	4,297,821
484	4,297,822
514	4,297,823
568	4,297,824
729	4,297,825

CLASS 53

157	4,297,826
282	4,297,827
	4,297,828

CLASS 55

165	4,298,357
185	4,298,358
269	4,298,359
273	4,298,360
290	4,298,361
304	4,298,362

CLASS 56

11.3	4,297,829
13.6	4,297,830
295	4,297,831
328 R	4,297,832
364	4,297,833

CLASS 57

58.86	4,297,834
251	4,297,835
291	4,297,836
350	4,297,837

CLASS 59

85	4,297,839
	4,297,840

CLASS 60

39.06	4,297,842
39.3	4,297,841
39.32	4,297,843
226 A	4,297,844
384	4,297,845
585	4,297,846
641.3	4,297,847
660	4,297,848

CLASS 62

3	4,297,849
	4,297,850
21	4,298,363
126	4,297,851
133	4,297,852
325	4,297,853
	4,297,854
	4,297,855
514 R	4,297,856

CLASS 65

3.11	4,298,364
3.12	4,298,365
	4,298,366
4.1	4,298,367
25.2	4,298,368
27	4,298,369
	4,298,370
79	4,298,371
136	4,298,372
260	4,298,373
335	4,298,374

CLASS 66

9 R	4,297,857
194	4,297,858

CLASS 68

13 R	4,297,859
200	4,297,860

CLASS 70

55	4,297,861
129	4,297,862
395	4,297,863
456 B	4,297,864

CLASS 71

90	4,298,375

CLASS 72

146	4,297,865
186	4,297,866
347	4,297,867
402	4,297,868
405	4,297,869
443	4,297,870

CLASS 73

23	4,297,871
32 A	4,297,872
61 LM	4,297,873
73	4,297,874
146	4,297,876
	4,297,877
	4,297,878
152	4,297,879
155	4,297,880
204	4,297,881
460	4,297,882
504	4,297,883
579	4,297,884
587	4,297,885
642	4,297,886
655	4,297,887
664	4,297,888
747	4,297,889
753	4,297,890
756	4,297,891
826	4,297,892
861	4,297,893
861.03	4,297,894
861.12	4,297,895
	4,297,896
	4,297,897
861.22	4,297,898
861.58	4,297,899
861.66	4,297,900
862.53	4,297,901
862.62	4,297,875
863.33	4,297,902
864.13	4,298,575
864.22	4,297,903

CLASS 74

5 F	4,297,904
5.43	4,297,905
410	4,297,906
417	4,297,907
469	4,297,908
473 R	4,297,909
	4,297,910
501 R	4,297,912
	4,297,913
532	4,297,914
	4,297,915
544	4,297,916
665 G	4,297,917
690	4,297,918
750 R	4,297,919
804	4,297,920

CLASS 75

49	4,298,376
53	4,298,377
60	4,298,378
82	4,298,379
101 BE	4,298,380
124	4,298,381
202	4,298,382
211	4,298,383

CLASS 81

3 R	4,297,921
57.18	4,297,922
57.41	4,297,923
59.1	4,297,924

CLASS 82

2 R	4,297,925
9	4,297,926

CLASS 83

36	4,297,927
57	4,297,928
110	4,297,929
156	4,297,930
397	4,297,931
581.1	4,297,932

CLASS 84

1.01	4,297,933
	4,297,935
1.03	4,297,934
314 R	4,297,936
430	4,297,937
435	4,297,938

CLASS 89

33 L	4,297,939

CLASS 98

33 R	4,297,940

CLASS 99

332	4,297,941
386	4,297,942

CLASS 100

129	4,297,943

CLASS 101

93.31	4,297,944
395	4,297,945

CLASS 102

229	4,297,949
307	4,297,946
473	4,297,948

CLASS 104

172 BT	4,297,950
209	4,297,951

CLASS 106

18.34	4,298,384
98	4,298,392
100	4,298,393
111	4,298,394
163 R	4,298,395
273 R	4,298,396
274	4,298,397
288 Q	4,298,398
309	4,298,399

CLASS 108

83	4,297,952
131	4,297,953

CLASS 112

104	4,297,954
121.15	4,297,955
158 A	4,297,956
184	4,297,957
220	4,297,958

CLASS 113

116 HH	4,297,959

CLASS 114

74 A	4,297,960
123	4,297,961
218	4,297,962
230	4,297,963
263	4,297,964
265	4,297,965

CLASS 116

277	4,297,966

CLASS 118

117	4,297,967
249	4,297,968
632	4,297,969
	4,297,970
658	4,297,972
719	4,297,971

CLASS 119

3	4,297,973
51 R	4,297,974

CLASS 123

193 CP	4,297,976
193 P	4,297,975
320	4,297,977
339	4,297,978
372	4,297,979
438	4,297,980
454	4,297,981
502	4,297,982
536	4,297,983
587	4,297,984

CLASS 124

22	4,297,985

CLASS 126

121	4,297,986
331	4,297,987
439	4,297,988
441	4,297,989
445	4,297,990
448	4,297,991

CLASS 127

29	4,298,400

CLASS 128

77	4,297,992
92 D	4,297,993
133	4,297,994
136	4,297,995
169	4,297,996
	4,297,997
204.26	4,297,998
205.16	4,297,999
218 A	4,298,000
247	4,298,001
260	4,298,002
	4,298,003
305	4,298,004
396	4,298,005
399	4,298,006
419 PG	4,298,007
477	4,298,008
660	4,298,009
719	4,298,010
763	4,298,011

CLASS 131

296	4,298,012
308	4,298,013

CLASS 132

9	4,298,014

CLASS 134

100	4,298,015

CLASS 135

67	4,298,016

CLASS 136

202	4,298,768

CLASS 137

1	4,298,017
3	4,298,018
9	4,298,019
315	4,298,020
334	4,298,021
341	4,298,022
529	4,298,023
624.11	4,298,024
624.14	4,298,025
625.47	4,298,026
625.65	4,298,027
868	4,298,028

CLASS 138

30	4,298,029
	4,298,030

CLASS 139

55.1	4,298,031
207	4,298,032
450	4,298,033
453	4,298,034

CLASS 141

1	4,298,035
	4,298,036
	4,298,037
2	4,298,038
90	4,298,039
115	4,298,040
392	4,298,041

CLASS 144

2 Z	4,298,042
136 R	4,298,043
176	4,298,044

CLASS 148

1.5	4,298,401
	4,298,402
	4,298,403
6.14 A	4,298,404
6.15 R	4,298,405
12 B	4,298,406
24	4,298,407
32	4,298,408
108	4,298,409
172	4,298,410

CLASS 149

19.4	4,298,411
19.5	4,298,412

CLASS 150

0.5	4,298,045

CLASS 152

209 R	4,298,046
417	4,298,047

CLASS 156

42	4,298,413
59	4,298,414
85	4,298,415
87	4,298,416
228	4,298,417
296	4,298,418
345	4,298,419
394 R	4,298,420
460	4,298,421
527	Re.30,787
568	4,298,422
616 R	4,298,423
668	4,298,424

CLASS 160

243	4,298,048

CLASS 162

18	4,298,425
57	4,298,426
	4,298,427
73	4,298,428
343	4,298,429

CLASS 164

30	4,298,049
72	4,298,051
416	4,298,052
429	4,298,053
468	4,298,050

CLASS 165
1 4,298,054
9 4,298,055
12 4,298,056
159 4,298,057
161 4,298,058
166 4,298,059
169 4,298,060
170 4,298,061
181 4,298,062

CLASS 166
55 4,298,063
75 A 4,298,064
88 4,298,065
300 4,298,066
315 4,298,067

CLASS 169
39 4,298,068

CLASS 172
39 4,298,069
123 4,298,070
624 4,298,071

CLASS 173
13 4,298,072
22 4,298,073
129 4,298,074
4,298,075
164 4,298,076

CLASS 174
52 FP 4,298,769
68.5 4,298,770
71 B 4,298,771
138 D 4,297,769

CLASS 175
63 4,298,077
72 4,298,078
339 4,298,079
373 4,298,080

CLASS 176
290 4,298,431

CLASS 177
187 4,298,081

CLASS 178
18 4,298,772
30 4,298,773

CLASS 179
18 BG 4,298,774
81 R 4,298,775

CLASS 180
65 R 4,298,082
125 4,298,083
131 4,298,084
247 4,298,085

CLASS 181
113 4,298,086
153 4,298,087
211 4,298,088
213 4,298,089
286 4,298,090

CLASS 182
3 4,298,091
70 4,298,092
153 4,298,093
155 4,298,094
184 4,298,095
188 4,298,096
198 4,298,097

CLASS 184
105 B 4,298,098

CLASS 186
58 4,298,099

CLASS 187
29 R 4,298,100

CLASS 188
283 4,298,101
319 4,298,102

CLASS 190
42 4,298,103
48 4,298,104

CLASS 192
0.044 4,298,109
0.094 4,298,113
3.23 4,298,105
3.57 4,298,106
12 D 4,298,107
13 R 4,298,108
48.4 4,298,110
58 B 4,298,111
70.29 4,298,112
129 A 4,298,114

CLASS 194
4 F 4,298,115
97 R 4,298,116

CLASS 198
367 4,298,117
382 4,298,118

CLASS 200
11 C 4,298,776
61.45 R 4,298,777
302 L 4,298,778
335 4,298,779

CLASS 201
6 4,298,435

CLASS 203
6 4,298,216

CLASS 204
15 4,298,434
70 4,298,437
78 4,298,438
157.1 W 4,298,439
165 4,298,440
180 G 4,298,441
180 P 4,298,442
192 E 4,298,443
192 R 4,298,444
196 4,298,445
224 R 4,298,446
252 4,298,447
299 R 4,298,448
4,298,449

CLASS 206
219 4,298,119
329 4,298,120
347 4,298,121
389 4,298,122
396 4,298,123
455 4,298,124
531 4,298,125

CLASS 208
8 LE 4,298,450
4,298,451
4,298,452
10 4,298,453
4,298,454
48 AA 4,298,455
88 4,298,456
107 4,298,457
112 4,298,458
120 4,298,459
121 4,298,460
139 4,298,461
4,298,462
189 4,298,463

CLASS 209
310 4,298,464

CLASS 210
94 4,298,466
96.1 4,298,467
136 4,298,468
168 4,298,469
170 4,298,470
4,298,471
198.2 4,298,472
213 4,298,473
238 4,298,474
266 4,298,475
304 4,298,465
373 4,298,476
674 4,298,477
695 4,298,478

CLASS 211
50 4,298,126
128 4,298,127

CLASS 212
267 4,298,128

CLASS 215
224 4,298,129

CLASS 219
10.55 B 4,298,780
69 M 4,298,782
69 W 4,298,781
73 4,298,783
124.02 4,298,784
124.34 4,298,785
216 4,298,786
222 4,298,787
386 4,298,788
406 4,298,789

CLASS 220
20 4,298,130
231 4,298,131
288 4,298,132
308 4,298,133
307 4,298,134
371 4,298,135

CLASS 221
1 4,298,136
11 4,298,137
115 4,298,138
198 4,298,139
232 4,298,140
251 4,298,141
304 4,298,142

CLASS 222
70 4,298,143
256 4,298,144
478 4,298,145
536 4,298,146
601 4,298,147

CLASS 223
37 4,298,148

CLASS 224
201 4,298,149
243 4,298,150
329 4,298,151

CLASS 226
95 4,298,152
97 4,298,153

CLASS 228
49 R 4,298,154
114 4,298,155

CLASS 229
2.5 R 4,298,156
35 4,298,157
69 4,298,158

CLASS 233
7 4,298,159
4,298,160
4,298,161
4,298,162

CLASS 235
92 SB 4,298,790
132 R 4,298,791
375 4,298,792
487 4,298,793

CLASS 236
46 R 4,298,163
49 4,298,164

CLASS 237
8 R 4,298,165

CLASS 239
24 4,298,166
129 4,298,167
659 4,298,168

CLASS 241
16 4,298,169
222 4,298,170

CLASS 242
18 A 4,298,171
47.01 4,298,172
58 4,298,173
128 4,298,174

CLASS 244
13 4,298,175
135 A 4,298,176
139 4,298,177
138 R 4,298,178

CLASS 246
34 R 4,298,179

CLASS 249
135 4,298,180

CLASS 250
227 4,298,794
282 4,298,795
328 4,298,796
372 4,298,797
423 R 4,298,798
445 T 4,298,799
4,298,800
447 4,298,801
484 4,298,802
492.2 4,298,803
504 H 4,298,806
562 4,298,807
563 4,298,808

CLASS 251
129 4,298,181
251 4,298,182
263 4,298,183
357 4,298,184

CLASS 252
8.55 D 4,298,479
8.73 4,298,480
21 4,298,481
25 4,298,482
32.7 HC 4,298,483
46.7 4,298,484
49.6 4,298,486
49.7 4,298,485
75 4,298,487
78.1 4,298,488
78.5 4,298,489
91 4,298,490
95 4,298,491
97 4,298,492
135 4,298,493
174.16 4,298,494
359 A 4,298,496
387 4,298,497
408 4,298,498
414 4,298,499
428 4,298,500
430 4,298,501
431 N 4,298,502
432 4,298,503
441 4,298,504
513 4,298,505
518 4,298,506
643 4,298,495

CLASS 256
41 4,298,185
64 4,298,186

CLASS 260
4 AR 4,298,507
18 R 4,298,508
29.1 SB 4,298,509
4,298,514
29.2 E 4,298,510
29.2 TN 4,298,511
29.4 R 4,298,512
29.7 H 4,298,513
30.4 N 4,298,515
31.8 HA 4,298,517
31.8 R 4,298,516
32.6 NA 4,298,518
33.8 UA 4,298,519
45.8 R 4,298,520
45.9 QB 4,298,522
45.9 R 4,298,521
112.5 R 4,298,523
239 BF 4,298,524
244.4 4,298,525
314.5 4,298,526
340.5 R 4,298,527
340.7 4,298,528
340.9 R 4,298,529
343.3 R 4,298,530
346.11 4,298,531
346.22 4,298,532
346.75 4,298,533
358 4,298,534
365 4,298,535
378 4,298,536
397.2 4,298,537
397.25 4,298,539
397.4 4,298,538
412.4 4,298,540
429 R 4,298,541
4,298,542
429.7 4,298,543
433 RW 4,298,544
465 H 4,298,545
465.9 4,298,546
505 A 4,298,547

CLASS 261
34 R 4,298,548
39 B 4,298,549
69 R 4,298,550
121 R 4,298,551

CLASS 264
3 B 4,298,552
11 4,298,553
25 4,298,554
31 4,298,555
46.6 4,298,556
51 4,298,557
65 4,298,558
4,298,559
66 4,298,560
86 4,298,561
103 4,298,562
111 4,298,563
177 R 4,298,564
181 4,298,565
317 4,298,566
516 4,298,567

CLASS 266
114 4,298,188
123 4,298,189
156 4,298,190
165 4,298,191
217 4,298,187
218 4,298,192

CLASS 267
63 R 4,298,193
64.11 4,298,194

CLASS 269
32 4,298,195

CLASS 272
52 4,298,196
115 4,298,197

CLASS 273
1 GC 4,298,198
1 GD 4,298,199
157 R 4,298,200
183 B 4,298,201
247 4,298,202

CLASS 277
152 4,298,203
165 4,298,204
197 4,298,205
205 4,298,206
230 4,298,207

CLASS 279
91 4,298,208

CLASS 280
11.2 4,298,209
259 4,298,210
297 4,298,211
515 4,298,212
628 4,298,213
735 4,298,214
777 4,297,911

CLASS 282
27.5 4,298,215

CLASS 283
7 4,298,217

CLASS 285
3 4,298,218
24 4,298,219
178 4,298,220
328 4,298,221
341 4,298,222

CLASS 292
216 4,298,223

CLASS 294
19 R 4,298,224
118 4,298,225

CLASS 296
216 4,298,226

CLASS 297
58 4,298,227
182 4,298,228

CLASS 299
7 4,298,229
33 4,298,230
50 4,298,231
64 4,298,232
91 4,298,233

CLASS 307
252 C 4,298,809
252 N 4,298,810
290 R 4,298,811

CLASS 308
3.6 4,298,234
26 4,298,235

CLASS 310
61 4,298,612

CLASS 312
215 4,298,236

CLASS 313
229 4,298,813
302 4,298,814
325 4,298,815
330 4,298,816
362.1 4,298,817
417 4,298,818
422 4,298,819
463 4,298,820
477 R 4,298,821
493 4,298,822
497 4,298,823

CLASS 315
4 4,298,824
39.51 4,298,825
151 4,298,826
241 R 4,298,827
248 4,298,828
408 4,298,829
411 4,298,830

CLASS 318
112 4,298,831
318 4,298,832
561 4,298,833
729 4,298,834

CLASS 323
281 4,298,835

CLASS 324
71 CP 4,298,836
72.5 4,298,837
117 R 4,298,838
137 4,298,839
363 4,298,840

CLASS 328
117 4,298,841

CLASS 329
50 4,298,842

CLASS 330
9 4,298,843
124 D 4,298,844

CLASS 331
94.5 C 4,298,845

CLASS 333
32 4,298,846
105 4,298,847
181 4,298,848
193 4,298,849
237 4,298,850

CLASS 334
11 4,298,851

CLASS 335
6 4,298,852

CLASS 336
83 4,298,853

CLASS 337
10 4,298,854

CLASS 338
35 4,298,855
193 4,298,856

CLASS 339
17 L 4,298,237
63 M 4,298,238
66 M 4,298,239
109 4,298,240
147 P 4,298,241
258 R 4,298,242
276 F 4,298,243

CLASS 340
52 A 4,298,857
146.3 MA 4,298,858
146.3 Z 4,298,859
365 L 4,298,861
572 4,298,862
573 4,298,863
637 4,298,864
706 4,298,865
713 4,298,866
728 4,298,867
753 4,298,868
782 4,298,869
785 4,298,870
825.04 4,298,860

CLASS 343
100 LE 4,298,872
100 SA 4,298,871
4,298,873
112 CA 4,298,875
112 R 4,298,874
758 4,298,876
781 CA 4,298,877
795 4,298,878

CLASS 350
3.79 4,298,244
96.29 4,298,245
122 4,298,246
295 4,298,247
310 4,298,248
338 4,298,249
357 4,298,250
428 4,298,251
470 4,298,252

CLASS 351
17 4,298,253
30 4,298,254

CLASS 352
85 4,298,255

CLASS 354
23 D 4,298,256
4,298,257
25 4,298,258

4,298,259
30 4,298,260
139 4,298,261
4,298,262
234 4,298,263
242 4,298,264
246 4,298,265
286 4,298,266
304 4,298,267

CLASS 355
3 R 4,298,269
3 SC 4,298,268
3 SH 4,298,270
8 4,298,271
28 4,298,272
61 4,298,273
71 4,298,274
4,298,275
72 4,298,276
76 4,298,277
85 4,298,278
133 4,298,279

CLASS 356
5 4,298,280
138 4,298,281
237 4,298,282
351 4,298,283
368 4,298,284
376 4,298,285
381 4,298,286

CLASS 357
22 4,298,879
38 4,298,880
4,298,881
4,298,882
72 4,298,883

CLASS 358
26 4,298,884
39 4,298,885
74 4,298,886
113 4,298,887
140 4,298,888
148 4,298,889
158 4,298,890
183 4,298,891
190 4,298,892
4,298,893
229 4,298,894
284 4,298,895

CLASS 360
11 4,298,896
39 4,298,897
67 4,298,898
122 4,298,899

CLASS 361
127 4,298,900
178 4,298,901
248 4,297,947
328 4,298,902
336 4,298,903
4,298,904
4,298,905
433 4,298,906

CLASS 362
4 4,298,907
14 4,298,908
18 4,298,909
33 4,298,910
4,298,911
66 4,298,912
103 4,298,913
112 4,298,914
124 4,298,915
127 4,298,916
157 4,298,917
217 4,298,918
226 4,298,919
281 4,298,920
346 4,298,921
376 4,298,922
392 4,298,923

CLASS 363
46 4,298,924
131 4,298,925
132 4,298,926

CLASS 364
200 4,298,927
4,298,928
4,298,929
4,298,930
4,298,931
4,298,932
4,298,933
4,298,934
4,298,935
4,298,936
413 4,298,938
421 4,298,939
426 4,298,940
431 4,298,941
483 4,298,942
505 4,298,943
515 4,298,944
523 4,298,945
557 4,298,946
4,298,947
603 4,298,948
706 4,298,949
726 4,298,950
752 4,298,951
786 4,298,952
825 4,298,953
900 4,298,954
4,298,955
4,298,956
4,298,957
4,298,958
4,298,959

CLASS 365
179 4,298,961
182 4,298,962
210 4,298,960

CLASS 366
4 4,298,287
8 4,298,288
196 4,298,289

CLASS 367
4 4,298,963
4,298,964
13 4,298,965
50 4,298,966
57 4,298,967
59 4,298,968
76 4,298,969
82 4,298,970

CLASS 368
76 4,297,838
204 4,298,971
222 4,298,972
276 4,298,973

CLASS 369
45 4,298,974
94 4,298,975
382 4,298,976

CLASS 370
62 4,298,977
92 4,298,978
104 4,298,979

CLASS 371
25 4,298,980
30 4,298,982
37 4,298,981

CLASS 375
12 4,298,983
40 4,298,984
82 4,298,985
84 4,298,986
106 4,298,987

CLASS 376
108 4,298,804
111 4,298,805
247 4,298,430
286 4,298,433
364 4,298,434
365 4,298,432

CLASS 400
3 4,298,290

CLASS 403
205 4,298,291

CLASS 404
10 4,298,292
98 4,298,293

CLASS 408
37 4,298,294
52 4,298,295
146 4,298,296

CLASS 411
262 4,298,297
342 4,298,298
514 4,298,299

CLASS 414
2 4,298,300
24.6 4,298,301
126 4,298,302
401 4,298,303
492 4,298,304
498 4,298,305
525 R 4,298,306
676 4,298,307
730 4,298,308
745 4,298,309

CLASS 415
1 4,298,310
80 4,298,311
118 4,298,312

CLASS 416
98 4,298,313

CLASS 417
299 4,298,314
300 4,298,315
310 4,298,316

CLASS 418
43 4,298,317
61 B 4,298,318
132 4,298,319

CLASS 422
16 4,298,568
27 4,298,569
64 4,298,570
65 4,298,571
68 4,298,572
94 4,298,573
97 4,298,574
135 4,298,576

CLASS 423
6 4,298,577
7 4,298,578
11 4,298,579
40 4,298,580
58 4,298,581
4,298,582
167 4,298,583
242 4,298,584
279 4,298,585
339 4,298,586
350 4,298,587
359 4,298,588
4,298,589

CLASS 424
1 4,298,590
4,298,591
4,298,592
4,298,593
19 4,298,594
78 4,298,595
88 4,298,596
92 4,298,597
101 4,298,598
119 4,298,599
120 4,298,600
128 4,298,601
200 4,298,602
230 4,298,603
240 4,298,604
246 4,298,605
4,298,606
4,298,607
249 4,298,608
250 4,298,609
256 4,298,610
261 4,298,611
267 4,298,612
274 4,298,613
279 4,298,614
285 4,298,615
4,298,616
298 4,298,617

CLASS 425
110 4,298,320
120 4,298,321
147 4,298,322
162 4,298,323
174.8 E 4,298,324
192 R 4,298,325
219 4,298,326
344 4,298,327
376 A 4,298,328
382 N 4,298,329
392 4,298,330
393 4,298,331
570 4,298,332

CLASS 426
36 4,298,618
43 4,298,619
44 4,298,620
55 4,298,621
254 4,298,622
335 4,298,623
532 4,298,624
572 4,298,625
600 4,298,626
637 4,298,627
656 4,298,628

CLASS 427
39 4,298,629
44 4,298,630
130 4,298,631
160 4,298,632
172 4,298,633
183 4,298,634
247 4,298,635
304 4,298,636
358 Re.30,789
372.2 4,298,637
385.5 4,298,638
386 4,298,639

CLASS 428
31 4,298,640
36 4,298,641
40 4,298,642
83 4,298,643
91 4,298,644
110 4,298,645
139 4,298,646
167 4,298,647
195 4,298,648
198 4,298,649
306 4,298,650
307 4,298,651
323 4,298,652
378 4,298,653
407 4,298,654
412 4,298,655
414 4,298,656
416 4,298,657
425.1 4,298,658
592 4,298,659
599 4,298,660
623 4,298,661

CLASS 429
30 4,298,662
4,298,663
191 4,298,664
197 4,298,665
206 4,298,666
248 4,298,667
250 4,298,668

CLASS 430
53 4,298,669
67 4,298,670
108 4,298,672
128 4,298,671
204 4,298,673
213 4,298,674
4,298,675
221 4,298,676
244 4,298,677
281 4,298,678
4,298,679
300 4,298,680
466 4,298,681
533 4,298,682
569 4,298,683
616 4,298,684

CLASS 431
11 4,298,333
24 4,298,334
25 4,298,335
264 4,298,336
285 4,298,337
352 4,298,338

CLASS 432
15 4,298,339
58 4,298,340
64 4,298,341

CLASS 435
7 4,298,685
4,298,686
4,298,687
14 4,298,688
34 4,298,689
80 4,298,690
101 4,298,691
119 4,298,692
305 4,298,693

CLASS 455
182 4,298,988
183 4,298,989
325 4,298,990

CLASS 474
110 4,298,342
235 4,298,343

CLASS 501
15 4,298,388
32 4,298,390
77 4,298,389
80 4,298,386
89 4,298,391
92 4,298,387
105 4,298,385

CLASS 518
704 4,298,694
720 4,298,695

CLASS 521
26 4,298,696
27 4,298,697
4,298,698
31 4,298,699
32 4,298,700
51 4,298,701
79 4,298,702
88 4,298,703
4,298,704
4,298,705
92 4,298,706
95 4,298,707
115 4,298,708
169 4,298,709

CLASS 525
5 4,298,710
40 4,298,711
74 4,298,712
323 4,298,713
330 4,298,714
340 4,298,715

CLASS 526
65 4,298,716
124 4,298,717
125 4,298,718
255 4,298,719
262 4,298,720
348 4,298,721
348.6 4,298,722

CLASS 528
271 4,298,723
302 4,298,724

CLASS 536
1 4,298,725
4 4,298,726
10 4,298,727
96 4,298,728
102 4,298,729
119 4,298,730

CLASS 544
11 4,298,731
20 4,298,732
106 4,298,733
251 4,298,734
257 4,298,735
274 4,298,736
360 4,298,737

CLASS 546
22 4,298,738
158 4,298,739
226 4,298,740
272 4,298,741

CLASS 548
152 4,298,742
203 4,298,743
240 4,298,744
313 4,298,745
315 4,298,746
318 4,298,747
347 4,298,748
377 4,298,749

CLASS 549
4 4,298,750
11 4,298,751
42 4,298,752

CLASS 556
415 4,298,753

CLASS 560
121 4,298,754
214 4,298,755
231 4,298,756
4,298,757
240 4,298,758

CLASS 562
485 4,298,759
506 4,298,760

CLASS 568
44 4,298,761
433 4,298,762
479 4,298,763
618 4,298,764
754 4,298,765
862 4,298,766

CLASSIFICATION OF DESIGNS

D2—	318	261,570			261,591		337	261,615			261,636		123	261,658		41	261,679
D3—	38	261,571		45	261,592		415	261,616		209	261,637	D16—	31	261,659		53	261,680
	71	261,572		78	261,593		418	261,613			261,638			261,660		64	261,681
D6—	4	261,573		94	261,594		432	261,617	D13—	2	261,639			261,661	D25—	16	261,682
	29	261,574		99	261,595		433	261,618		4	261,640		104	261,662	D26—	2	261,683
	35	261,575		109	261,596		437	261,619		38	261,641	D17—	10	261,663		63	261,684
	41	261,576		128	261,597		438	261,620	D14—	5	261,643	D18—	3	261,664		87	261,685
	42	261,577			261,598		456	261,621		11	261,644	D19—	77	261,665		93	261,686
		261,578			261,599	D10—	6	261,622		30	261,642		92	261,668			261,687
		261,579		129	261,600		46	261,623			261,645	D21—	6	261,667		102	261,688
	66	261,580		207	261,603			261,624		53	261,647		13	261,666	D27—	3	261,689
	125	261,581		212	261,604		65	261,625			261,648			261,669			261,690
	181	261,582			261,605		69	261,626			261,649		64	261,670	D28—	8.1	261,691
	189	261,583	D8—	21	261,606		79	261,627		70	261,650		109	261,671		35	261,692
	198	261,584		25	261,607		106	261,628		73	261,651		137	261,672		68	261,693
	234	261,585		27	261,608			261,629		96	261,652	D22—	27	261,673	D32—	32	261,655
D7—	16	261,586		74	261,609		121	261,630		110	261,653	D23—	37	261,674		40	261,601
		261,587		82	261,610	D11—	131	261,631		114	261,646		97	261,675		55	261,602
	38	261,588		89	261,611		157	261,632	D15—	5	261,654	D24—	8	261,676	D34—	24	261,634
		261,589		104	261,612		162	261,633		111	261,656		10	261,677	D47—	6 E	261,694
	40	261,590	D9—	311	261,614	D12—	147	261,635		118	261,657		26	261,678			

CLASSIFICATION OF PLANTS

P.—	47	4,784		68	4,785		74	4,786

DEFENSIVE PUBLICATIONS APPLICATIONS

[Notice of Dec. 16, 1969, 869 O.G. 6877]

56—	15.6	T101,206	71—	29	T101,203	156—	643	T101,201	261—	41 D	T101,202	264—	523	T101,205	376—	221	T101,204

GEOGRAPHICAL INDEX OF RESIDENCE OF INVENTORS

(U.S. States, Territories and Armed Forces, the Commonwealth of Puerto Rico, and the Canal Zone)

Alabama	1	Kentucky	21	Oregon	41
Alaska	2	Louisiana	22	Pennsylvania	42
American Samoa	3	Maine	23	Puerto Rico	43
Arizona	4	Maryland	24	Rhode Island	44
Arkansas	5	Massachusetts	25	South Carolina	45
California	6	Michigan	26	South Dakota	46
Canal Zone	7	Minnesota	27	Tennessee	47
Colorado	8	Mississippi	28	Texas	48
Connecticut	9	Missouri	29	Utah	49
Delaware	10	Montana	30	Vermont	50
District of Columbia	11	Nebraska	31	Virginia	51
Florida	12	Nevada	32	Virgin Islands	52
Georgia	13	New Hampshire	33	Washington	53
Guam	14	New Jersey	34	West Virginia	54
Hawaii	15	New Mexico	35	Wisconsin	55
Idaho	16	New York	36	Wyoming	56
Illinois	17	North Carolina	37	U.S. Air Force	57
Indiana	18	North Dakota	38	U.S. Army	58
Iowa	19	Ohio	39	U.S. Navy	59
Kansas	20	Oklahoma	40		

(First number in listing denotes location according to above key. Refer to patent number in body of the Official Gazette to obtain details as to inventor name, location, etc.)

PATENTS

6 :	4,297,862		4,298,130		4,298,926		4,298,667		4,298,475		4,298,689
	4,298,255		4,298,142		4,298,951		4,298,762		4,298,477		4,298,768
	4,298,691		4,298,149		4,298,957		4,298,773		4,298,497	22 :	4,297,786
01 :	4,297,883		4,298,150		4,298,964		4,298,783		4,298,499		4,297,936
	4,297,987		4,298,151		4,298,976		4,298,836		4,298,501		4,298,043
	4,298,634		4,298,176	08 :	4,297,893		4,298,873		4,298,502		4,298,218
	4,298,913		4,298,178		4,297,986		4,298,917		4,298,504		4,298,454
04 :	Re.30,787		4,298,182		4,298,065		4,298,932		4,298,580		4,298,469
	4,298,326		4,298,198		4,298,119		4,298,950		4,298,593		4,298,657
	4,298,466		4,298,209		4,298,237	13 :	4,297,860		4,298,622		4,298,747
	4,298,849		4,298,242		4,298,343		4,297,861		4,298,712		4,298,758
	4,298,871		4,298,282		4,298,863		4,297,931		4,298,759	24 :	4,297,746
	4,298,899		4,298,288		4,298,875		4,298,071		4,298,774		4,297,760
	4,298,924		4,298,311		4,298,897		4,298,132		4,298,786		4,297,948
	4,298,935		4,298,312		4,298,954		4,298,777		4,298,815		4,297,989
	4,298,952		4,298,349	09 :	4,297,907		4,298,907		4,298,856		4,298,157
06 :	4,297,748		4,298,350		4,297,937	16 :	4,298,163		4,298,884		4,298,204
	4,297,752		4,298,402		4,297,954		4,298,202		4,298,890		4,298,248
	4,297,753		4,298,437		4,297,962	17 :	Re.30,786		4,298,943		4,298,411
	4,297,754		4,298,444		4,297,991		4,297,769		4,298,944		4,298,423
	4,297,755		4,298,450		4,298,098		4,297,811	18 :	4,297,780		4,298,451
	4,297,756		4,298,465		4,298,156		4,297,817		4,297,829		4,298,612
	4,297,761		4,298,500		4,298,174		4,297,914		4,297,851		4,298,858
	4,297,773		4,298,527		4,298,187		4,297,915		4,297,853		4,298,938
	4,297,790		4,298,528		4,298,207		4,297,921		4,297,889		4,298,942
	4,297,802		4,298,543		4,298,366		4,297,935		4,297,902		4,298,979
	4,297,804		4,298,549		4,298,434		4,297,938		4,297,990		4,298,985
	4,297,806		4,298,555		4,298,553		4,297,940		4,298,146		4,298,987
	4,297,820		4,298,566		4,298,771		4,298,011		4,298,197	25 :	4,297,749
	4,297,841		4,298,570		4,298,787		4,298,045		4,298,232		4,297,919
	4,297,870		4,298,586		4,298,794		4,298,048		4,298,342		4,297,983
	4,297,882		4,298,587		4,298,916		4,298,061		4,298,383		4,298,026
	4,297,899		4,298,595		4,298,959		4,298,062		4,298,638		4,298,133
	4,297,903		4,298,617	10 :	4,297,772		4,298,103		4,298,726		4,298,254
	4,297,932		4,298,684		4,298,083		4,298,123		4,298,734		4,298,267
	4,297,939		4,298,723		4,298,412		4,298,139		4,298,750		4,298,280
	4,297,942		4,298,729		4,298,447		4,298,143		4,298,829		4,298,335
	4,297,949		4,298,752		4,298,531		4,298,177		4,298,830		4,298,345
	4,297,965		4,298,760		4,298,613		4,298,186		4,298,905		4,298,347
	4,297,966		4,298,788		4,298,722		4,298,194	19 :	4,297,805		4,298,436
	4,297,985		4,298,811	12 :	4,297,828		4,298,331		4,297,909		4,298,442
	4,297,998		4,298,833		4,297,992		4,298,353		4,298,106		4,298,582
	4,298,003		4,298,834		4,297,994		4,298,357		4,298,128		4,298,584
	4,298,017		4,298,835		4,297,995		4,298,358		4,298,294		4,298,594
	4,298,029		4,298,847		4,298,009		4,298,400	20 :	4,297,833		4,298,611
	4,298,037		4,298,872		4,298,134		4,298,428	21 :	4,297,810		4,298,674
	4,298,074		4,298,887		4,298,140		4,298,429		4,297,852		4,298,675
	4,298,077		4,298,888		4,298,229		4,298,459		4,297,854		4,298,716
	4,298,082		4,298,893		4,298,251		4,298,461		4,297,855		4,298,798
	4,298,084		4,298,910		4,298,291		4,298,462		4,298,024		4,298,853
	4,298,094		4,298,911		4,298,337		4,298,463		4,298,110		4,298,877
	4,298,096		4,298,914		4,298,351		4,298,467		4,298,225		4,298,898
	4,298,112		4,298,915		4,298,662		4,298,468		4,298,627		4,298,908

GEOGRAPHICAL INDEX OF RESIDENCE OF INVENTORS

	4,298,918		4,298,713		4,298,892		4,298,166		4,297,825		4,298,081
	4,298,936	30 :	4,298,021		4,298,977		4,298,330		4,297,848		4,298,086
	4,298,953	31 :	4,297,787		4,298,982		4,298,361		4,297,895		4,298,290
	4,298,956		4,297,999	35 :	4,298,391		4,298,470		4,297,896		4,298,363
26 :	4,297,807	32 :	4,298,397	36 :	4,297,797		4,298,648		4,297,897		4,298,455
	4,297,816	33 :	4,297,794		4,297,798		4,298,685		4,297,898		4,298,474
	4,297,839		4,298,014		4,297,801		4,298,839		4,297,924		4,298,479
	4,297,840		4,298,581		4,297,813	38 :	4,297,830		4,297,971		4,298,540
	4,297,869		4,298,663		4,297,819		4,298,420		4,298,019		4,298,546
	4,297,910		4,298,850		4,297,842	39 :	4,297,800		4,298,023		4,298,557
	4,297,959	34 :	4,297,738		4,297,864		4,297,821		4,298,075		4,298,572
	4,297,980		4,297,783		4,297,913		4,297,901		4,298,170		4,298,589
	4,298,027		4,297,795		4,297,972		4,297,923		4,298,179		4,298,635
	4,298,049		4,297,808		4,298,035		4,297,929		4,298,243		4,298,708
	4,298,101		4,297,878		4,298,053		4,297,943		4,298,287		4,298,800
	4,298,105		4,297,941		4,298,118		4,298,018		4,298,292		4,298,805
	4,298,115		4,297,957		4,298,124		4,298,025		4,298,323		4,298,843
	4,298,168		4,297,958		4,298,175		4,298,031		4,298,336		4,298,868
	4,298,193		4,298,002		4,298,200		4,298,072		4,298,368		4,298,946
	4,298,297		4,298,036		4,298,216		4,298,073		4,298,370		4,298,949
	4,298,316		4,298,038		4,298,228		4,298,099		4,298,374		4,298,966
	4,298,319		4,298,091		4,298,241		4,298,141		4,298,408		4,298,968
	4,298,373		4,298,104		4,298,274		4,298,152		4,298,483		4,298,969
	4,298,404		4,298,125		4,298,275		4,298,155		4,298,511		4,298,984
	4,298,476		4,298,129		4,298,277		4,298,164		4,298,517	49 :	4,298,093
	4,298,516		4,298,136		4,298,298		4,298,208		4,298,554		4,298,437
	4,298,558		4,298,165		4,298,328		4,298,215		4,298,578		4,298,867
	4,298,559		4,298,181		4,298,329		4,298,222		4,298,646	50 :	4,298,824
	4,298,563		4,298,199		4,298,364		4,298,281		4,298,653	51 :	4,297,823
	4,298,602		4,298,201		4,298,365		4,298,307		4,298,656		4,297,887
	4,298,614		4,298,239		4,298,377		4,298,354		4,298,678		4,298,013
	4,298,624		4,298,250		4,298,382		4,298,369		4,298,703		4,298,133
	4,298,709		4,298,348		4,298,389		4,298,372		4,298,704		4,298,212
	4,298,744		4,298,360		4,298,390		4,298,413		4,298,705		4,298,214
	4,298,874		4,298,398		4,298,407		4,298,574		4,298,724		4,298,314
	4,298,901		4,298,399		4,298,439		4,298,633		4,298,728		4,298,338
27 :	4,297,771		4,298,409		4,298,432		4,298,647		4,298,743		4,298,403
	4,297,781		4,298,443		4,298,505		4,298,654		4,298,746		4,298,565
	4,297,876		4,298,453		4,298,514		4,298,663		4,298,790		4,298,810
	4,297,950		4,298,458		4,298,571		4,298,697		4,298,818		4,298,831
	4,297,988		4,298,480		4,298,590		4,298,707		4,298,828		4,298,844
	4,298,000		4,298,481		4,298,609		4,298,737		4,298,832	53 :	4,297,809
	4,298,007		4,298,483		4,298,632		4,298,755		4,298,859		4,297,930
	4,298,016		4,298,484		4,298,642		4,298,864		4,298,970		4,298,044
	4,298,056		4,298,486		4,298,650		4,298,912		4,298,988		4,298,076
	4,298,169		4,298,493		4,298,655		4,298,948	44 :	4,298,154		4,298,089
	4,298,334		4,298,512		4,298,659	40	4,297,812	45 :	4,297,776		4,298,296
	4,298,379		4,298,521		4,298,664		4,297,883		4,298,001		4,298,305
	4,298,532		4,298,523		4,298,672		4,297,891		4,298,032		4,298,426
	4,298,711		4,298,541		4,298,682		4,297,922		4,298,405		4,298,427
	4,298,835		4,298,542		4,298,735		4,298,022		4,298,473		4,298,496
	4,298,860		4,298,547		4,298,736		4,298,127		4,298,906		4,298,854
	4,298,927		4,298,552		4,298,754		4,298,293	46 :	4,298,224		4,298,904
28 :	4,297,774		4,298,604		4,298,769		4,298,309		4,298,773	54 :	4,298,138
	4,297,818		4,298,608		4,298,789		4,298,456	47 :	4,298,299		4,298,193
	4,298,006		4,298,666		4,298,792		4,298,508		4,298,435	55 :	4,297,762
29 :	4,297,961		4,298,681		4,298,813		4,298,621		4,298,560		4,297,775
	4,298,116		4,298,695		4,298,816		4,298,693	48 :	4,297,847		4,298,042
	4,298,185		4,298,741		4,298,861		4,298,939		4,297,868		4,298,108
	4,298,196		4,298,742		4,298,920	41 :	4,297,796		4,297,879		4,298,126
	4,298,301		4,298,764		4,298,929		4,297,916		4,297,880		4,298,341
	4,298,313		4,298,765		4,298,986		4,298,286		4,297,997		4,298,618
	4,298,375		4,298,819	37 :	4,297,765		4,298,623		4,298,004		4,298,649
	4,298,482		4,298,832		4,297,836		4,298,932		4,298,063		4,298,668
	4,298,592		4,298,841		4,297,900	42 :	4,297,778		4,298,078	96 :	4,298,801
	4,298,639		4,298,862		4,297,952		4,297,814				

DESIGN PATENTS

6 :	261,647		261,648	10 :	261,613		261,617	27 :	261,607	39 :	261,633
	261,670		261,649	12 :	261,665		261,620		261,632		261,636
04 :	261,611		261,653	13 :	261,618		261,632		261,681		261,668
05 :	261,673		261,654	15 :	261,583	18 :	261,596	29 :	261,692	40 :	261,664
06 :	261,581		261,655	17 :	261,571		261,623	34 :	261,572	42 :	261,602
	261,584		261,663		261,586	20 :	261,610		261,582		261,621
	261,603		261,669		261,587		261,641		261,619		261,625
	261,606		261,671		261,589		261,684		261,657	48 :	261,642
	261,614		261,682		261,590	24 :	261,675		261,678		261,645
	261,622		261,689		261,591	25 :	261,570	36 :	261,633		261,662
	261,626		261,693		261,592		261,660		261,631		261,677
	261,628	08 :	261,685		261,594		261,683		261,661	49 :	261,674
	261,629		261,686		261,595		261,690		261,676	50 :	261,574
	261,634		261,687		261,601	26 :	261,637	37 :	261,573	51 :	261,608
	261,644		261,688		261,604		261,638		261,616	53 :	261,631
	261,646	09 :	261,680		261,605						

PLANT PATENTS

06 :	4,784		4,785		4,786						

DEFENSIVE PUBLICATIONS APPLICATIONS

[Notice of Dec. 16, 1969, 869 O.G. 687]

01 :	T101,203	06 :	T101,204	26 :	T101,202	36 :	T101,201	47 :	T101,205		T101,206

U.S. GOVERNMENT PRINTING OFFICE : O—1981

CHANGE OF ADDRESS FORM

NAME—FIRST, LAST

COMPANY NAME OR ADDITIONAL ADDRESS LINE

STREET ADDRESS

CITY | STATE | ZIP CODE

PLEASE PRINT OR TYPE | (or) COUNTRY

Mail this form to: NEW ADDRESS

Superintendent of Documents
Government Printing Office SSOM
Washington, D.C. 20402

Attach last subscription label here.

SUBSCRIPTION ORDER FORM

SUBSCRIPTION ORDER FORM

ENTER MY SUBSCRIPTION TO:

@ $ Domestic; @ $ Foreign.

NAME—FIRST, LAST

COMPANY NAME OR ADDITIONAL ADDRESS LINE

STREET ADDRESS

CITY | STATE | ZIP CODE

PLEASE PRINT OR TYPE | (or) COUNTRY

☐ Remittance Enclosed (Make checks payable to Superintendent of Documents)

☐ Charge to my Deposit Account No. .

MAIL ORDER FORM TO:
Superintendent of Documents
Government Printing Office
Washington, D.C. 20402

Vol. 1012 Number 2

OFFICIAL GAZETTE

of the

UNITED STATES PATENT AND TRADEMARK OFFICE

U.S.
DEPARTMENT
OF COMMERCE

Patent
and
Trademark
Office

OFFICIAL GAZETTE of the
UNITED STATES PATENT and TRADEMARK OFFICE

November 10, 1981 | Volume 1012 | Number 2

CONTENTS

The following are mailed under direction of the Superintendent of Documents, Government Printing Office, Washington, D.C., 20402, to whom all subscriptions should be made payable and all communications addressed:

THE OFFICIAL GAZETTE (PATENT SECTION), issued weekly, subscription $325.00 per annum for first-class mailing, also available as fourth-class mail at $225.00 domestic; $281.25 foreign; foreign first-class mailing rates will be furnished upon request; single copies each, $5.50 domestic, $6.90 foreign.

THE OFFICIAL GAZETTE (TRADEMARK SECTION), issued weekly, subscription $105.00 per annum, foreign mailing $131.25 per annum; single copies $2.75 each domestic, $3.45 foreign.

GENERAL INFORMATION concerning PATENTS, price $2.25 each.

GENERAL INFORMATION concerning TRADEMARKS, price $1.70 each.

PRINTED COPIES OF PATENTS are furnished by the Patent and Trademark Office at 50 cents each; PLANT PATENTS in color, $1.00 each; copies of TRADEMARKS AND DESIGN PATENTS at 20 cents each. Address orders to the Commissioner of Patents and Trademarks, Washington, D.C., 20231.

Printing authorized by Section 11(a)3 of Title 35, U.S. Code P.T.O.

PATENT AND TRADEMARK OFFICE NOTICES

Patent Cooperation Treaty Information

For information concerning the PCT, consult Chapter 1800 of the Manual of Patent Examining Procedure and notices 90–95 in the consolidated listing of notices appearing in the Official Gazette of Jan. 6, 1981.

The PCT fees in effect after May 19, 1981 are as follows:

Transmittal fee	$ 35.00
Search fee	300.00
International Basic Fee (for the first 30 sheets of an international application)	215.00
Basic Supplemental Fee (for each sheet over 30)	4.00
International Designation Fee (for each State for which a national patent is sought, or group of States for which the same regional patent is sought)	50.00

RENE D. TEGTMEYER,
Assistant Commissioner for Patents.

REISSUE APPLICATIONS FILED

Notice under 37 CFR 1.11(b). The reissue applications listed below are open to inspection by the general public in the indicated Examining Groups and copies may be obtained by paying the fee therefor (37 CFR 1.21(b)).

D. 258,772, Re. S.N. 284,716, Filed July 20, 1981, Cl. D2/309, SPORT SHOE, Edward J. Norton, et al., Owner of Record: *New Balance Athletic Shoe, Inc., Boston, Mass.*, Attorney or Agent: Herbert P. Kenway, et al., Ex. Gp.: 290

3,698,271, Re. S.N. 287,513, Filed July 27, 1981, Cl. 83/899, ADJUSTABLE AIR EJECT DIE-CUTTING SYSTEM, Martin Kesten, et al., Owner of Record: *Preston Engravers, Inc., Windsor, Conn.*, Attorney or Agent: Peter L. Costas, Ex. Gp.: 323

3,776,832, Re. S.N. 258,752, Filed Apr. 29, 1981, Cl. 204/195R, ELECTROCHEMICAL DETECTION CELL, Harry G. Oswin, et al., Owner of Record: *Becton Dickinson, Co., Paramus, N.J.*, Attorney or Agent: Roberts B. Larson, et al., Ex. Gp.: 114

3,784,635, Re. S.N. 277,470, Filed June 25, 1981, Cl. 560/21, SUBSTITUTED PHENOXYBENZOIC ACIDS AND ESTERS THEREOF, Robert J. Theissen, Owner of Record: *Mobil Oil Corp., New York, N.Y.*, Attorney or Agent: Charles A. Huggett, et al., Ex. Gp.: 126

3,824,167, Re. S.N. 258,753, Filed Apr. 29, 1981, Cl. 204/195R, GAS DETECTING AND MEASURING DEVICE, Harry G. Oswin, et al., Owner of Record: *Becton Dickinson, Co., Paramus, N.J.*, Attorney or Agent: Roberts B. Larson, et al., Ex. Gp.: 114

3,931,195, Re. S.N. 279,133, Filed June 30, 1981, Cl. 546/234, SUBSTITUTED PIPERIDINES, Stanley J. Dykstra, et al., Owner of Record: *Mead Johnson & Co., Evansville, Ind.*, Attorney or Agent: Robert H. Uloth, et al., Ex. Gp.: 121

3,992,267, Re. S.N. 258,879, Filed Apr. 29, 1981, Cl. 204/1T, ELECTROCHEMICAL GAS DETECTION METHOD, Harry G. Oswin, et al., Owner of Record: *Becton Dickinson, Co., Paramus, N.J.*, Attorney or Agent: Roberts B. Larson, et al., Ex. Gp.: 116

4,001,770, Re. S.N. 283,775, Filed July 16, 1981, Cl. 367/57, ROLL-A-LONG THREE-DIMENSIONAL COMMON DEPTH POINT EXPLORATION, Helmut H. Hofer, Owner of Record: *Texas Instruments, Inc., Dallas, Tex.*, Attorney or Agent: Melvin Sharp, et al., Ex. Gp.: 222

4,034,622, Re. S.N. 280,429, Filed July 6, 1981, Cl. 074/501R, INFINITELY ADJUSTABLE CABLE CONTROLLED APPARATUS AND METHOD, James R. Deck, Owner of Record: *Caterpillar Tractor Co.r, Peoria, Ill.*, Attorney or Agent: Paul S. Lempio, Ex. Gp.: 352

4,049,942, Re. S.N. 277,654, Filed June 26, 1981, Cl. 219/69M, ELECTRIC DISCHARGE MACHINING METHOD AND DEVICE WITH PRESET ELECTRODE FEED, Francois Balleys, et al., Owner of Record: *Ateliers des Charmilles, S.A., Geneva, Switzerland*, Attorney or Agent: Claude A. Patalidis, et al., Ex. Gp.: 213

4,052,204, Re. S.N. 280,539, Filed July 6, 1981, Cl. 75/154, QUATERNARY SPINODAL COPPER ALLOYS, John Travis Plewes, Owner of Record: *Bell Telephone Laboratories, Inc., Berkeley Hights, N.J.*, Attorney or Agent: S. E. Hollander, Ex. Gp.: 111

4,065,070, Re. S.N. 290,098, Filed Aug. 4, 1981, Cl. 242/107.4A, DUAL SPOOL RETRACTOR, Regis V. Pilarski, et al., Owner of Record: *The Firestone Tire & Rubber Co., Akron, Ohio*, Attorney or Agent: Jesse B. Grove, Jr., et al., Ex. Gp.: 242

4,090,632, Re. S.N. 280,519, Filed July 6, 1981, Cl. 220/4R, ADJUSTABLE INSTRUMENT CASE, Fred L. Katzmann, Owner of Record: *Ballantine Laboratories, Inc., Boonton, N.J.*, Attorney or Agent: Richard Whiting, Ex. Gp.: 241

4,094,801, Re. S.N. 291,149, Filed Aug. 7, 1981, Cl. 252/33, MAGNESIUM-CONTAINING COMPLEXES, METHOD FOR THEIR PREPARATION, AND COMPOSITIONS CONTAINING THE SAME, John Wesley Forsberg, Owner of Record: *The Lubrizol Corp., Wickliffe, Ohio*, Attorney or Agent: James W. Adams, Jr., et al., Ex. Gp.: 116

4,098,770, Re. S.N. 278,406, Filed June 29, 1981, Cl. 525/480, SPRAY-DRIED PHENOLIC ADHESIVES, Antoine Berchem, et al., Owner of Record: *Reichhold Ltd., Islington, Ontario, Canada*, Attorney or Agent: Eugene J. Kalil, Ex. Gp.: 143

4,161,782, Re. S.N. 284,086, Filed July 16, 1981, Cl. 364/571, MICROPROCESSOR COMPUTERIZED PRESSURE/TEMPERATURE/TIME (DOWN-HOLE) RECORDER, Oliver W. McCracken, Owner of Record: *Otis Engineering Co., Dallas, Tex.*, Attorney or Agent: M. H. Gay, et al., Ex. Gp.: 236

4,162,909, Re. S.N. 288,252, Filed July 30, 1981, Cl. 65/159, HOT GOB DETECTOR FOR A GLASSWARE FORMING MACHINE, Homer D. F. Peters, Owner of Record: *Owen-Illinois, Inc., Toledo, Ohio*, Attorney or Agent: David H. Wilson, et al., Ex. Gp.: 173

4,163,309, Re. S.N. 290,546, Filed Aug. 6, 1981, Cl. 029/407, ARRANGEMENT FOR MOUNTING COMPONENTS ON A CARRIER BOARD AND METHOD OF INDICATING MOUNTING LOCATIONS, Gerd Stuckler, Owner of Record: *Inventor*, Attorney or Agent: Warren T. Jessup, Ex. Gp.: 321

4,164,391, Re. S.N. 285,576, Filed July 21, 1981, Cl. 432/124, CONVEYOR FOR PROCESSING, David I. McDonald, et al., Owner of Record: *Cincinnati Milacron, Inc., Cincinnati, Ohio*, Attorney or Agent: Daniel P. Worth, et al., Ex. Gp.: 344

4,164,408, Re. S.N. 279,288, Filed June 25, 1981, Cl. 71/98, SALTS OF SUBSTITUTED PHENOXYBENZOIC ACIDS, COMPOSITIONS OF THE SAME AND HERBICIDAL USE THEREOF, Robert J. Theissen, Owner of Record: *Mobil Oil Corp., New York, N.Y.*, Attorney or Agent: Charles A. Huggett, et al., Ex. Gp.: 121

4,164,409, Re. S.N. 279,274, Filed June 25, 1981, Cl. 071/098, SUBSTITUTED PHENOXYBENZOIC ACIDS, COMPOSITIONS OF THE SAME AND HERBICIDAL USE THEREOF, Robert J. Theissen, Owner of Record: *Mobil Oil Corp., New York, N.Y.*, Attorney or Agent: Charles A. Huggett, et al., Ex. Gp.: 121

4,166,935, Re. S.N. 285,704, Filed July 22, 1981, Cl. 200/72R, ALTERNATELY-OPERABLE TWO-PUSH-BUTTON SWITCH, Thomas E. Norby, Owner of Record: *Eaton Corp., Cleveland, Ohio*, Attorney or Agent: Robert J. McCloskey, et al., Ex. Gp.: 243

4,171,607, Re. S.N. 284,238, Filed July 17, 1981, Cl. 56/275, TWO-ROW TOBACCO HARVESTER, Miller Taylor, et al., Owner of Record: *Taylor Tobacco Enterprises, Inc., Elizabethtown, N.C.*, Attorney or Agent: Eugene L. Bernard, et al., Ex. Gp.: 333

4,172,200, Re. S.N. 288,341, Filed July 30, 1981, Cl. 544/260, PROCESS FOR THE PREPARATION OF 10-DEAZAAMINOPTERIN AND RELATED COMPOUNDS, James R. Piper, et al., Owner of Record: *Southern Research Institute, Birmingham, Ala.*, Attorney or Agent: D. C. Roylance, et al., Ex. Gp.: 122

4,191,995, Re. S.N. 283,214, Filed July 14, 1981, Cl. 364/113, DIGITAL AUTOMATIC GAIN CONTROL CIRCUIT, Cecil W. Farrow, Owner of Record: *Bell Telephone Laboratories, Inc., Murray Hill, N.J.*, Attorney or Agent: S. E. Hollander, et al., Ex. Gp.: 236

4,204,377, Re. S.N. 279,200, Filed June 30, 1981, Cl. 53/399, PROCESS AND APPARATUS FOR WRAPPING NETTING MATERIAL AROUND A LOAD, William G. Lancaster, et al., Owner of Record: *Lantech, Inc., Louisville, Ky.*, Attorney or Agent: John S. Hale, et al., Ex. Gp.: 324

4,237,021, Re. S.N. 285,295, Filed July 20, 1981, Cl. 252/49.5, METAL WORKING EMULSION, Sune Andlid, et al., Owner of Record: *AB Karlshamns Oljefabriker, Karlshamn, Sweden*, Attorney or Agent: Cyrus S. Hapgood, et al., Ex. Gp.: 116

4,212,172, Re. S.N. 260,263, Filed May 4, 1981, Cl. 62/305, FIBERGLASS AIRCONDITIONER AIR PRECOOLER, Anthony C. Manno, Owner of Record: *Inventor*, Attorney or Agent: None, Ex. Gp.: 344

4,213,124, Re. S.N. 270,097, Filed June 3, 1981, Cl. 340/706, SYSTEM FOR DIGITALLY TRANSMITTING AND DISPLAYING TEXTS ON TELEVISION SCREEN, Jean Francis Barda, et al., Owner of Record: *Etablissement Public de Diffusion dit Telediffusion de France 1' Etal Francais, Represente par le Secretaire d' Etal aux Postes et Telecommunications Centre National d' Etudes des Telecommunications Issy*, Attorney or Agent: Charles A. Laff, et al., Ex. Gp.: 234

4,242,243, Re. S.N. 281,201, Filed July 7, 1981, Cl. 260/23AR, HIGH SOLIDS AMBIENT TEMPERATURE CURING COATINGS OF ACRYLICFATTY ACID DRYING OIL RESINS, J. A. Antonelli, et al., Owner of Record: *E. I. DuPont de Nemours and Co., Wilmington, Del.*, Attorney or Agent: Hilmar L. Fricke, Ex. Gp.: 144

4,252,590, Re. S.N. 291,061, Filed Aug. 3, 1981, Cl. 156/167, LOW DENSITY MATTING AND PROCESS, Alfred Rasen, et al., Owner of Record: *Akzona, Inc., Asheville, N.C.*, Attorney or Agent: John H. Shurtleff, Ex. Gp.: 161

REQUESTS FOR REEXAMINATION FILED

Notice under 37 CFR 1.11(c). The requests for reexamination listed below are open to inspection by the general public in the indicated Examining Groups. Copies of the requests and related papers may be obtained by paying the fee therefor established in the Rules (37 CFR 1.21(b)).

In the event correspondence to the patent owner is not received, this notice will be considered to be constructive notice to the patent owner and reexamination will proceed (37 CFR 1.248(a)(5) and 1.525(b).

3,512,495, Reexam. No. 90/000,082, Requested: Oct. 9, 1981, Cl. 114/248, SELECTIVELY CONNECTABLE BOAT & BARGE, Edwin H. Fletcher, Owner of Record: *United Freight Co., New York, N.Y.*, Attorney or Agent: Arthur G. Yeager, Ex. Gp.: 315, Requester: John W. Gilbert Associates, Inc., Boston, Mass.

4,209,261, Reexam. No. 90/000,081, Requested: Oct. 8, 1981, Cl. 400/196.1, RIBBON CASSETTE FOR OBLIQUE RIBBON FEEDING, David W. Bell, et al., Owner of Record: *NRC Corp., Dayton, Ohio*, Attorney or Agent: Wilbert Hawk, Jr., Ex. Gp.: 330, Requester: NRC Corp., Dayton, Ohio

4,209,280, Reexam. No. 90/000,084, Requested: Oct. 13, 1981, Cl. 414/620, LIFT TRUCK LOAD CLAMP HAVING NON-RESILIENT CONTACT PAD SURFACES TEXTURED FOR DIRECTIONALLY VARIABLE RESISTANCE TO SLIPPAGE, Edward D. Bittner, Owner of Record: *Cascade Corp., Portland, Oreg.*, Attorney or Agent: Chernoff & Vilhauer, Ex. Gp.: 314, Requester: Cascade Corp., Portland, Oreg.

4,255,962, Reexam. No. 90/000,083, Requested: Oct. 13, 1981, Cl. 73/15A, METHOD AND MEANS FOR RAPIDLY DISTINGUISHING A SIMULATED DIAMOND FROM A NATURAL DIAMOND, Leland E. Ashman, Owner of Record: *Ceres Corp., Waltham, Mass.*, Attorney or Agent: Hamilton, Brook, Smith & Reynolds, Ex. Gp.: 244, Requester: Hamilton, Brook, Smith & Reynolds, Lexington, Mass.

PATENT NOTICES

Certificates of Correction for the Week of Nov. 10, 1981

Re. 30,697	4,249,304	4,269,697	4,281,158
D. 256,114	4,250,002	4,269,933	4,281,166
D. 259,821	4,252,270	4,270,981	4,281,191
3,976,586	4,252,570	4,271,234	4,281,432
4,026,563	4,253,984	4,271,440	4,281,530
4,033,924	4,254,763	4,271,524	4,281,740
4,068,180	4,255,073	4,271,912	4,282,008
4,068,558	4,257,053	4,271,961	4,282,221
4,089,811	4,257,972	4,272,138	4,282,255
4,107,848	4,258,417	4,272,224	4,282,426
4,119,791	4,258,729	4,272,442	4,282,501
4,130,721	4,259,198	4,272,598	4,282,778
4,137,568	4,260,582	4,272,917	4,283,202
4,146,206	4,261,615	4,273,425	4,283,453
4,150,258	4,261,881	4,273,807	4,283,543
4,154,891	4,262,160	4,274,221	4,283,552
4,158,407	4,262,340	4,274,754	4,283,600
4,186,569	4,263,136	4,274,920	4,284,384
4,189,464	4,263,506	4,275,014	4,284,404
4,193,817	4,263,519	4,275,967	4,284,728
4,199,419	4,263,763	4,276,186	4,284,794
4,205,583	4,264,239	4,277,229	4,285,105
4,206,087	4,264,262	4,277,457	4,285,176
4,206,522	4,265,225	4,277,662	4,285,507
4,208,540	4,265,644	4,277,672	4,285,712
4,217,736	4,265,681	4,278,400	4,285,990
4,217,844	4,265,827	4,278,623	4,286,106
4,219,560	4,265,925	4,278,813	4,286,202
4,221,767	4,266,272	4,279,014	4,286,463
4,224,284	4,266,708	4,279,020	4,286,464
4,226,592	4,267,077	4,279,187	4,286,717
4,228,446	4,267,116	4,279,511	4,287,116
4,236,527	4,267,338	4,279,534	4,287,390
4,239,049	4,268,027	4,279,709	4,287,560
4,242,481	4,268,342	4,279,960	4,288,240
4,246,147	4,268,463	4,280,144	4,288,271
4,246,536	4,268,575	4,280,433	4,288,368
4,247,442	4,268,599	4,280,851	4,288,637
4,247,887	4,268,902	4,280,986	4,288,821
4,248,626	4,269,401	4,281,029	4,289,824
4,248,858	4,269,563	4,281,114	

Reference Collections of U.S. Patents Available for Public Use in Patent Depository Libraries

The libraries listed herein, designated as patent depository libraries, receive current issues of U.S. Patents and maintain collections of earlier issued patents. The scope of these collections varies from library to library, ranging from patents of only recent months or years in some libraries to all or most of the patents issued since 1870, or earlier, in other libraries.

These patent collections are open to public use and each of the patent depository libraries, in addition, offers the publications of the patent classification system (e.g. The Manual of Classification, Index to the U.S. Patent Classification, Classification Definitions, etc.) and provides technical staff assistance in their use to aid the public in gaining effective access to information contained in patents. With one exception, as noted in the table following, the collections are organized in patent number sequence.

Depending upon the library, the patents may be available in microfilm, in bound volumes of paper copies, or in some combination of both. Facilities for making paper copies from either microfilm in reader-printers or from the bound volumes in paper-to-paper copies are generally provided for a fee.

Owing to variations in the scope of patent collections among the patent depository libraries and in their hours of service to the public, anyone contemplating use of the patents at a particular library is advised to contact that library, in advance, about its collection and hours, so as to avert possible inconvenience.

State	*Name of Library*	*Telephone Contact*
Alabama	Birmingham Public Library	(205) 254-2555
Arizona	Tempe: Science Library, Arizona State University	(602) 965-7601
California	Los Angeles Public Library	(213) 626-7555 Ext. 273
	Sacramento: California State Library	(916) 322-4572
	Sunnyvale: Patent Information Clearinghouse*	(408) 738-5580
Colorado	Denver Public Library	(303) 573-5152 Ext. 222
Delaware	Newark: University of Delaware	(302) 738-2238
Georgia	Atlanta: Price Gilbert Memorial Library, Georgia Institute of Technology	(404) 894-4519
Illinois	Chicago Public Library	(312) 269-2814
Louisiana	Baton Rouge: Troy H. Middleton Library, Louisiana State University	(504) 388-2570
Massachusetts	Boston Public Library	(617) 536-5400 Ext. 265
Michigan	Detroit Public Library	(313) 833-1450
Minnesota	Minneapolis Public Library & Information Center	(612) 372-6552
Missouri	Kansas City: Linda Hall Library	(816) 363-4600
	St. Louis Public Library	(314) 241-2288 Ext. 214, 215
Nebraska	Lincoln: University of Nebraska-Lincoln, Engineering Library	(402) 472-3411
New Hampshire	Durham: University of New Hampshire Library	(603) 862-1777
New Jersey	Newark Public Library	(201) 733-7814
New York	Albany: New York State Library	(518) 474-5125
	Buffalo and Erie County Public Library	(716) 856-7525 Ext. 267
	New York Public Library (The Research Libraries)	(212) 790-6291
North Carolina	Raleigh: D. H. Hill Library, N.C. State University	(919) 737-3280
Ohio	Cincinnati & Hamilton County, Public Library of	(513) 369-6936
	Cleveland Public Library	(216) 623-2870
	Columbus: Ohio State University Libraries	(614) 422-6286
	Toledo/Lucas County Public Library	(419) 255-7055 Ext. 212
Oklahoma	Stillwater: Oklahoma State University Library	(405) 624-6546
Pennsylvania	Philadelphia: Franklin Institute Library	(215) 448-1321**
	Pittsburgh: Carnegie Library of Pittsburgh	(412) 622-3138
	University Park: Pattee Library, Pennsylvania State University	(814) 865-4861
Rhode Island	Providence Public Library	(401) 521-7722 Ext. 226
Tennessee	Memphis & Shelby County Public Library and Information Center	(901) 528-2957
Texas	Dallas Public Library	(214) 748-9071
	Houston: The Fondren Library, Rice University	(713) 527-8101 Ext. 2587
Washington	Seattle: Engineering Library, University of Washington	(206) 543-0740
Wisconsin	Madison: Kurt F. Wendt Engineering Library, University of Wisconsin	(608) 262-6845
	Milwaukee Public Library	(414) 278-3043

*Collection organized by subject matter.

**Call only between the hours of 10:00 a.m. and 5:00 p.m.

PATENT EXAMINING CORPS

RENE D. TEGTMEYER, Assistant Commissioner
WILLIAM FELDMAN, Deputy Assistant Commissioner

CONDITION OF PATENT APPLICATIONS AS OF September 5, 1981

PATENT EXAMINING GROUPS	Actual Filing Date of Oldest New Case Awaiting Action
CHEMICAL EXAMINING GROUPS	
GENERAL CHEMISTRY AND PETROLEUM CHEMISTRY, GROUP 110—D. E. TALBERT, Director. Inorganic Compounds; Inorganic Compositions; Organo-Metal and Organo-Metalloid Chemistry; Metallurgy; Metallurgical Apparatus; Metal Stock; Electro Chemistry; Batteries; Hydrocarbons; Mineral Oil Technology; Lubricating Compositions; Gaseous Compositions; Fuel and Igniting Devices.	5-12-80
GENERAL ORGANIC CHEMISTRY, GROUP 120—C. E. VAN HORN, Director. Heterocyclic Amides; Alkaloids; Azo; Sulfur; Misc. Esters; Carbohydrates; Herbicides; Poisons; Medicines; Cosmetics; Steroids; Oxo and Oxy; Quinones; Acids; Carboxylic Acid Esters; Acid Anhydrides; Acid Halides.	10-11-79
HIGH POLYMER CHEMISTRY, PLASTICS AND MOLDING, GROUP 140—J. O. THOMAS, JR., Director. Synthetic Resins; Rubber; Proteins; Macromolecular Carbohydrates; Mixed Synthetic Resin Compositions; Synthetic Resins With Natural Polymers and Resins; Reclaiming; Pore-Forming; Compositions (Part) e.g., Coating; Molding; Ink; Prosthdontics; Adhesive and Abrading Compositions; Molding, Shaping, Treating Process, and Apparatus Therefor; Irradiation (Part); Bleaching; Dyeing; Leather, Fur and Textile Treating Compositions.	7-09-80
COATING, LAMINATING AND PHOTOGRAPHY, GROUP 160—S. N. ZAHARNA, Director. Coating: Processes, Apparatus and Misc. Products; Laminating Methods and Apparatus; Stock Materials; Adhesive Bonding; Special Chemical Manufactures; Special Utility Compositions; and Photography.	1-12-80
SPECIALIZED CHEMICAL INDUSTRIES AND CHEMICAL ENGINEERING, GROUP 170—R. F. WHITE, Director. Fertilizers; Foods; Fermentation; Analytical Chemistry; Reactors; Sugar and Starch; Paper Making; Glass Manufacture; Gas; Heating and Illuminating; Cleaning Processes; Liquid Purification; Distillation; Preserving; Liquid, Gas, and Solid Separation; Gas and Liquid Contact Apparatus; Refrigeration; Concentrative Evaporators; Mineral Oils Apparatus; Misc. Physical Processes.	5-06-80
ELECTRICAL EXAMINING GROUPS	
INDUSTRIAL ELECTRONICS, PHYSICS AND RELATED ELEMENTS, GROUP 210—S. W. ENGLE, Director. Generation and Utilization; General Applications; Conversion and Distribution; Heating and Related Art Conductors; Switches; Photography; Motion Pictures; Horology; Acoustics; Recorders; Weighing Scales.	1-07-80
SPECIAL LAWS ADMINISTRATION, GROUP 220—KENNETH L. CAGE, Director. Ordnance, Firearms and Ammunition; Lubrication; Illumination; Nuclear Reactors; Acoustics, Communications, Optics; Radar; Directional Radio; Torpedoes; Seismic Exploring; Cathode Ray Tube Circuitry; Cryptography; Laser Devices; Radioactive Materials; Powder Metallurgy, Rocket Fuels; Special, Fuel, Explosive and Thermic Compositions; Thermal and Photoelectric Batteries.	1-18-80
INFORMATION TRANSMISSION, STORAGE, AND RETRIEVAL, GROUP 230—VACANT. Communications; Multiplexing Techniques; Television; Facsimile; Data Processing, Computation and Conversion; Storage Devices and Related Arts.	1-23-80
RECEPTACLES, SANITATION AND CLEANING, WINDING, AND MEASURING, GROUP 240—A. L. SMITH, Director. Receptacles; Bearings; Joint Packing; Conduits; Switches; Presses; Plumbing Fixtures; Textile Spinning; Cleaning; Food Treating; Agitating; Centrifugal Separating; Geometrical Instruments; Sound Recording; Image Projectors; Web Feeding; Winding and Reeling; Cable Hoists; Measuring and Testing; Indicating; Fluent Material Handling.	12-07-79
ELECTRONIC COMPONENT SYSTEMS AND DEVICES, GROUP 250—S. S. MATTHEWS, Director. Semi-Conductor and Space Discharge Systems and Devices; Electronic Component Circuits; Wave Transmission Lines and Networks; Optics; Radiant Energy; Measuring.	4-20-79
DESIGN, GROUP 290—KENNETH L. CAGE, Director. Industrial Arts; Household, Personal and Fine Arts.	2-08-80
MECHANICAL EXAMINING GROUPS	
HANDLING AND TRANSPORTING MEDIA, GROUP 310—B. R. GRAY, Director. Conveyors; Hoists; Elevators; Article Handling Implements; Store Service; Sheet Feeding; Dispensing; Fluid Sprinkling; Fire Extinguishers; Coin Handling; Check Controlled Apparatus; Classifying and Assorting Solids; Boats; Ships; Aeronautics; Motor and Land Vehicles and Appurtenances; Brakes; Railways and Railway Equipment.	1-09-80
MATERIAL SHAPING, ARTICLE MANUFACTURING, TOOLS, GROUP 320—M. M. NEWMAN, Director. Manufacturing Processes, Assembling, Combined Machines, Special Article Making; Metal Deforming; Sheet Metal and Wire Working; Metal Fusion-Bonding, Metal Founding; Machine Tools for Shaping or Dividing; Work and Tool Holders, Woodworking; Tools; Cutlery; Jacks; Fishing, Etc.; Butchering; and Books and Printed Matter.	6-12-79
AMUSEMENT, HUSBANDRY, PERSONAL TREATMENT, INFORMATION, GROUP 330—R. E. AEGERTER, Director. Amusement and Exercising Devices; Projectors; Animal and Plant Husbandry; Plants; Harvesting; Earth Working and Excavating; Tobacco; Artificial Body Members; Dentistry; Jewelry; Surgery; Toiletry; Printing; Typewriters; Information Dissemination.	1-30-80
HEAT, POWER, AND FLUID ENGINEERING, GROUP 340—D. J. STOCKING, Director. Power Plants; Combustion Engines; Fluid Motors; Reaction Motors; Pumps; Rotary Engines and Pumps; Heat Generation and Exchange; Refrigeration; Ventilation; Drying; Temperature and Humidity Regulation; Couplings; Gearing; Fluid Handling and Control; Lubrication.	10-22-79
GENERAL CONSTRUCTIONS, TEXTILES, MINING AND GEARING, GROUP 350—G. M. FORLENZA, Director. Building Structures; Racks; Cabinets; Closures; Supports; Furniture; Fasteners; Locks; Pipe Couplings; Joints; Miscellaneous Hardware; Textiles; Sewing Machines; Apparel; Footwear; Earth Engineering; Earth Drilling; Mining; Wells; Roads; Bridges; Tool Driving; Gearing; Machine Elements; Clutches.	2-19-80

Expiration of patents: The patents within the range of numbers indicated below expire during September 1981, except those which may have expired earlier due to shortened terms under the provisions of Public Law 690, 79th Congress, approved August 8, 1946 (60 Stat. 940) and Public Law 619, 83rd Congress, approved August 23, 1954 (68 Stat. 764), or which may have had their terms curtailed by disclaimer under the provisions of 35 U.S.C. 253. Other patents, issued after the dates of the range of numbers indicated below, may have expired before the full term of 17 years for the same reasons, or have lapsed under the provisions of 35 U.S.C. 151.

Patents .... Numbers 3,146,459 to 3,151,328, inclusive
Plant Patents .... Numbers 2,444 to 2,448, inclusive

REISSUES

NOVEMBER 10, 1981

Matter enclosed in heavy brackets [ ] appears in the original patent but forms no part of this reissue specification; matter printed in italics indicates additions made by reissue.

Re. 30,790
UNIVERSAL JOINT LUBRICATION
David S. Lewis, Defiance, Ohio, assignor to The Zeller Corporation, Defiance, Ohio
Original No. 3,832,865, dated Sep. 3, 1974, Ser. No. 357,206, May 4, 1973. Application for reissue Mar. 22, 1979, Ser. No. 22,740
Int. Cl.³ F16D *3/26*
U.S. Cl. 64—17 A **4 Claims**

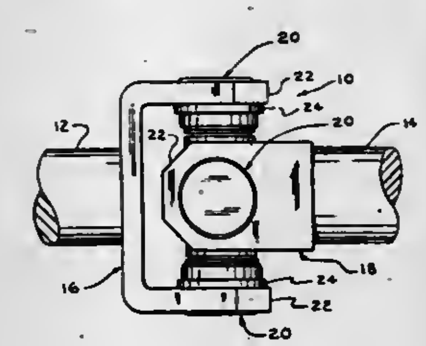

1. A cross for a universal joint comprising a body forming four trunnions extending therefrom along two mutually perpendicular lines, passages in said body from a central portion thereof to positions near the ends of said trunnions, a cavity in the end of each of said trunnions communicating with one of said passages, and passage extensions communicating with the passages and extending into said cavities, said passage extensions having substantially cylindrical outer surfaces forming annular lubricant reservoirs with said cavities, *means at the outer ends of the trunnions providing passageways between the outer portion of each lubricant reservoir and the outer cylindrical bearing surface of the trunnion, said lubricant reservoirs having a volume in excess of the passageways.*

Re. 30,791
CANTILEVERED BELTED BAG LOADING APPARATUS
Vytautas Kupcikevicius, Chicago, Ill., assignor to Union Carbide Corporation, New York, N.Y.
Original No. 3,942,624, dated Mar. 9, 1976, Ser. No. 345,933, Mar. 29, 1973. Continuation of Ser. No. 871,980, Jan. 24, 1978, abandoned. Application for reissue Sep. 17, 1979, Ser. No. 74,574
Int. Cl.³ B65G *43/00*
U.S. Cl. 198—341 **4 Claims**

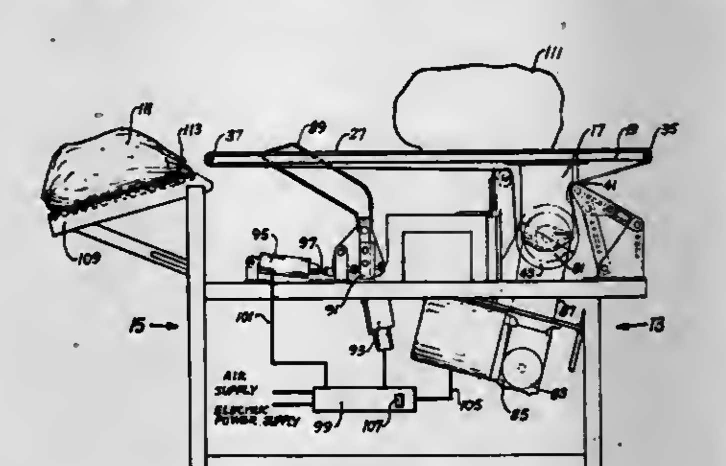

7. Apparatus for bagging meat articles of varying sizes, shapes and weights in suitably sized flexible plastic film bags at a bagging station, which apparatus substantially reduces manual handling of the meat articles, minimizes bruising thereof and does not require adjustment or alteration of the apparatus during the bagging operation when meat articles of varying sizes, shapes and weights are being bagged, said apparatus comprising, in combination;
a support means;
a multiplicity of parallel arrayed conveyor belt supports mounted substantially horizontally on said support means in cantilevered relationship thereto and extending lengthwise from a first end whereat meat articles are received to a second end whereat meat articles are discharged, at least said second end being located at a cantilevered end of said belt supports;
conveyor means comprising substantially flat conveyor belts, each moveably mounted on said conveyor belt support for movement lengthwise over the upper and lower sides of said supports, the outer surfaces of said belts being entirely above the belt supports when said belts pass over the upper sides of said supports, the conveyor belts and their respective belt supports being arranged so that the meat articles during conveying and bagging do not contact the belt supports and said conveyor belts being aligned so as to provide a substantially flat meat contacting surface above said supports from transporting the meat articles from the first end to the second end;
a bagging zone located at said meat contacting surface adjacent to the second end,
each conveyor belt and its respective support being spaced laterally apart in fixed relationship from each adjacent conveyor belt and its respective support in said bagging zone, the spaces between adjacent conveyor belts and their respective supportsat the bagging zone being large enough to permit passage of a bag wall thereinto and thereby a selective placement of bags of varying widths over one or more of said conveyor belts and their respective supports at the bagging zone; the space above said meat contacting surface in the bagging zone being unobstructed and open to accommodate meat articles of varying heights in the bagging zone and to permit the selective placement of bags of varying sizes over such meat articles when meat articles are positioned on said meat contacting surface in the bagging zone; whereby a bag suitably sized to accommodate the meat article to be bagged may be placed over the meat article and some or all of the conveyor belts and their respective supports, and meat articles of varying size, shape and weight may be readily and easily bagged at a single bagging station;
motive means operably connected to said conveyor means arranged to move said conveyor means; and
control means operably connected to said motive means.

Re. 30,792
X-RAY FILM PACKAGE
Gunter Schmidt, Malibu, Calif., assignor to E. I. Du Pont de Nemours and Company, Wilmington, Del.
Reissued No. Re. 28,438, dated Jun. 3, 1975, Ser. No. 466,402, May 2, 1974.
Original No. 3,741,386, dated Jun. 26, 1973, Ser. No. 136,530, Apr. 22, 1971. Continuation-in-part of Ser. No. 52,980, Jul. 7, 1970, abandoned. Application for reissue Sep. 25, 1978, Ser. No. 945,321
Int. Cl.² B65D *85/00, 85/30, 85/62*
U.S. Cl. 206—455 **7 Claims**

1. A film package for use in a daylight handling system, said package comprising
a. a plurality of substantially identical photographically sensitive film sheets, each sheet having a *single* cut-away portion of small area along an edge thereof,said sheets being stacked in alternating superposition [[whereby the]], **said** cut-away portions of alternate sheets [[form]] **forming** discontinuous, [spaced apart,] parallel rows [[*which are*]] **being spaced from the corners of**

the sheets in said stack and *spaced equidistant from opposite sides of a center line perpendicular to a common edge of said stack;* and

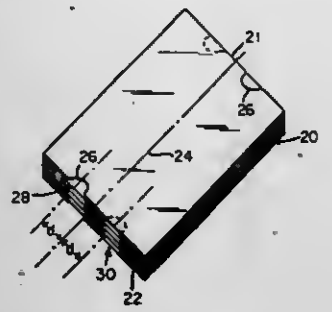

b. cover means opaque to actinic radiation surrounding said stack.

Re. 30,793
APPARATUS FOR WATER TREATMENT
Karl R. Dunkers, Hastskovagen 7, S-183 50 Taby, Sweden
Original No. 4,144,170, dated Mar. 13, 1979, Ser. No. 834,558, Sep. 19, 1977. Application for reissue Feb. 28, 1980, Ser. No. 125,634
Claims priority, application Sweden, Sep. 29, 1976, 7610792; Sep. 29, 1976, 7610793
Int. Cl.^{3} B01D *21/10*
U.S. Cl. 210—522 **5 Claims**

6. Apparatus for separating settleable and floating materials from polluted water, said apparatus comprising:
an inlet means through which water is supplied to the apparatus;
an assembly of a plurality of spaced parallel lamellae defining narrow passages arranged for the flow of water in a mainly horizontal direction through said passages, said passages comprising a first set of passages which communicate along one side of the assembly with the inlet means, so that the water can enter said first set of passages and flow in parallel therethrough toward the opposite side of said assembly, and a second set of passages which are closed toward the inlet means at said first side of the assembly;
a flow reversal chamber arranged along said opposite side of the assembly and communicating with both said first set of passages and said second set of passages, so that water may enter said flow reversal chamber from said first set of passages and then enter said second set of passages to flow in parallel therethrough and in an opposite direction to the flow of water through said first set of passages;
the passages of said first set of passages alternating with the passages of said second set of passages, so that the water flows in opposite directions along opposite faces of at least some of said lamellae;

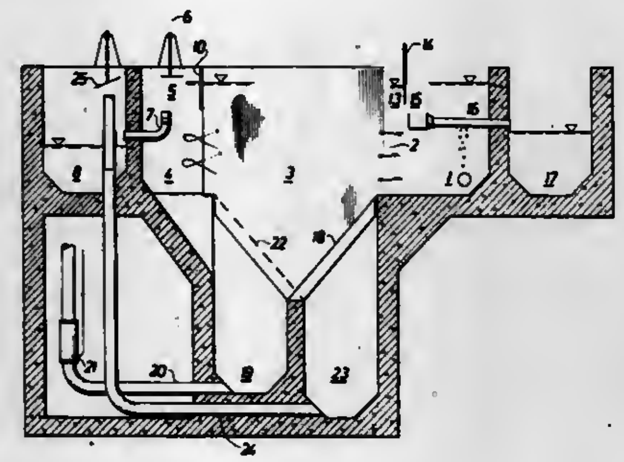

means closing only the top portions of the ends of said second set of passages opposite to the inlet means, so as to prevent flow into said second set of passages from an upper area of said flow reversal chamber while permitting flow from a lower area thereof;
outlet means communicating with said second set of passages at the ends thereof opposite to the flow reversal chamber;
said passages being at least partially open at their bottoms, so that settleable solids leave said passages in a downward direction; and
means for collecting said settleable solids.

PLANT PATENTS

GRANTED NOVEMBER 10, 1981

Illustrations for plant patents are usually in color and therefore it is not practicable to reproduce the drawing.

4,787
TABLE GRAPE
Harold P. Olmo, Putah Creek Levee Rd., and Albert T. Koyama, 713 Hunt Way, both of Davis, Calif. 95616
Filed Jan. 28, 1980, Ser. No. 115,857
Int. Cl.^{3} A01H *5/00*
U.S. Cl. Plt.—47 **1 Claim**

1. The new and distinct variety of table grape herein described and illustrated and identified by the characteristics enumerated above.

4,788
TABLE GRAPE
Harold P. Olmo, Putah Creek Levee Rd., and Albert T. Koyama, 713 Hunt Way, both of, Davis, Calif. 95616
Filed Jan. 28, 1980, Ser. No. 115,859
Int. Cl.^{3} A01H *5/00*
U.S. Cl. Plt.—47 **1 Claim**

1. The new and distinct variety of table grape herein described and illustrated and identified by the characteristics enumerated above.

4,789
NECTARINE TREE
Frederic W. Anderson, 826 W. 22nd St., Merced, Calif. 95340
Filed Sep. 22, 1980, Ser. No. 189,215
Int. Cl.^{3} A01H *5/00*
U.S. Cl. Plt.—41 **1 Claim**

1. A new and distinct variety of dwarf nectarine tree substantially as shown and described.

PATENTS

GRANTED NOV. 10, 1981

ERRATA

For CLASS	See PATENT NO.
294–149	4,299,342
356–225	4,299,468
501–091	4,299,631
501–127	4,299,632
376–249	4,299,656
376–217	4,299,657
250–506	4,299,658
376–272	4,299,659
376–298	4,299,660
376–251	4,299,661
376–260	4,299,662
174–110	4,299,713
422–068	4,299,794
073–864	4,299,795
376–190	4,300,054

PATENTS

GRANTED NOVEMBER 10, 1981

GENERAL AND MECHANICAL

4,298,991
PERIPHERAL VIEW BLINDERS
Angelo Recenello, 817 Carmel Ave., Albany, Calif. 94706
Filed Jul. 28, 1980, Ser. No. 172,927
Int. Cl.³ A61F *9/02*

U.S. Cl. 2—13 **1 Claim**

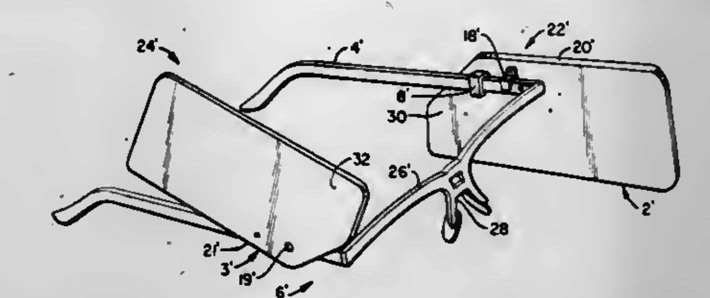

1. Blinders for obstructing a user's peripheral vision comprising:

first and second elongate templepieces, each having forward and rearward ends;

a templepiece connecting member, said member having means for resting its central portion on the bridge of the user's nose;

means for foldably connecting the forward ends of each templepiece to opposite ends of said connecting member;

first and second generally planar, substantially opaque shields each having an upper edge;

first and second means for pivotally connecting said first and second shields near the upper edges thereof to said first and second templepieces, said pivotally connecting means being adapted to permit each said shield to pivot in generally vertical planes parallel to said respective templepiece; and

first and second pivot stops mounted to said respective first and second shields near the respective upper edges, said pivot stops extending toward the respective templepiece for engagement therewith to halt the pivotal movement of said respective shield in a first shield position when said shield is rotated in a first direction and in a second shield position when said shield is rotated in the direction opposite the first direction, each said shield positioned generally centrally of said templepiece connecting member and substantially below the respective templepieces when in said first shield position and positioned substantially rearward of said connecting member and substantially above the respective templepieces when in said second shield position;

whereby the peripheral vision of the user is substantially obstructed when the shields are in their respective first shield positions and is substantially unobstructed when in the second shield position.

4,298,992
POSTERIORLY STABILIZED TOTAL KNEE JOINT PROSTHESIS
Albert H. Burstein, Greenwich, Conn., and John N. Insall, Scarsdale, N.Y., assignors to New York Society for the Relief of the Ruptured and Crippled, New York, N.Y.
Filed Jan. 21, 1980, Ser. No. 113,632
Int. Cl.³ A61F *1/03*

U.S. Cl. 3—1.911 **4 Claims**

1. In a knee joint prosthesis having

a femoral component which includes a pair of laterally spaced-apart condylar portions, each of which has an external surface which is smoothly convexly curved antero-posteriorly to match generally the lateral profile of an anatomical femoral condyle and smoothly convexly curved laterally throughout its antero-posterior extent, and a box-like intercondylar portion joining the condylar portions; and

a tibial component which includes a plate-like platform portion having on its superior surface a pair of laterally spaced-apart concavities, each of which is adapted to receive in nested relation one of the condylar portions of the femoral component, and a post extending superiorly from the platform surface intermediate the concavities for reception in the intercondylar portion of the femoral component;

the improvements wherein:

the intercondylar portion defines a recess opening inferiorly toward the tibial component and includes spaced-apart lateral walls, a superior wall which joins the lateral walls and has an inferior surface that is generally flat, lies generally parallel to a reference plane perpendicular to the nominal axis of the extended leg and intersects a patella

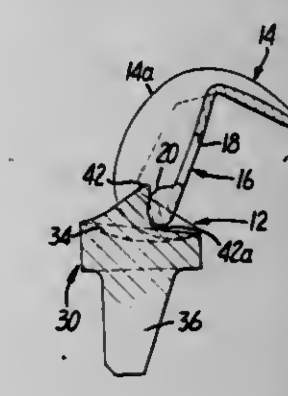

portion of the femoral component at a location that is substantially above the platform portion of the tibial component and generally level with the top of the tibial post at full extension, and a cam follower portion at the posterior end of the superior wall having a transverse convexly curved follower surface; and

the tibial post has a posterior surface having a concavely curved cam portion adjacent the juncture between the post and the platform surface, the cam portion on the post being adapted to be ordinarily engaged by the follower surface on the intercondylar portion only after about 40° to 50° flexure of the leg and a tendancy of the femur to translate anteriorly relative to the tibia and to force the zones of contact between the femoral condylar surfaces of the femoral component and the concavities of the tibial component posteriorly as the degree of leg flexion increases.

4,298,993
ENDOPROSTHESIS OF THE BODY OF THE INNOMINATE BONE
Irina D. Kovaleva, ulitsa Sakko-Vantsetti, 34, kv. 12; Ljudmila A. Tyschenko, ulitsa Novouzenskaya, 15/33, kv. 192, and Valery F. Potekhin, Naberezhnaya Kosmonavtov, 2, kv. 68, all of Saratov, U.S.S.R.
Filed Feb. 8, 1980, Ser. No. 119,995
Int. Cl.³ A61F *1/03*

U.S. Cl. 3—1.912 **1 Claim**

1. An endoprosthesis for the body of the innominate bone, comprising:

a visor curved both longitudinally and transversely, the visor having a concave surface positionable facing the head of the femur;

said visor having fixing elements, one of which being essentially a wedge curved both longitudinally and transversely and having a crescent-shaped base integral with said visor;

said wedge having a concave surface passing into said re-

spective concave surface of said visor and a convex surface;
through holes formed in said wedge for the osseous tissue to accrete thereinto opening into said convex surface and said concave surface of said wedge;
through slots formed in the taper edge of said wedge along the entire wedge length forming teeth;

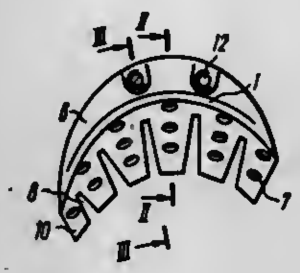

another of said fixing elements being essentially a plurality of screws; and
holes, adapted to accommodate said screws, formed in said wedge and opening into said base of said wedge and into the convex surface thereof.

4,298,994
POSTERIOR CHAMBER INTRA-OCULAR TRANSPLANT DEVICE
Henry M. Clayman, 13255 Biscayne Bay Dr., Miami, Fla. 33181
Filed Oct. 26, 1979, Ser. No. 88,643
Int. Cl.³ A61F *1/16, 1/24*
U.S. Cl. 3—13 **13 Claims**

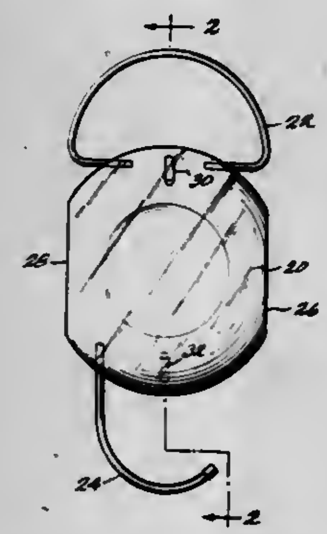

1. An intra-ocular device for implantation in the posterior chamber of an eye comprising:
a lens having a dimension in one transverse direction across the lens surface greater than its dimension in a perpendicular direction across the lens surface,
upper and lower haptic loops attached to said lens on opposing sides thereof, for contacting the eye surface in the posterior chamber to position said lens in the posterior chamber.

4,298,995
INTRAOCULAR LENS CONSTRUCTION
Stanley Poler, 78 E. Second St., New York, N.Y. 10003
Continuation-in-part of Ser. No. 57,323, Jul. 13, 1979, Pat. No. 4,249,271. This application May 6, 1980, Ser. No. 147,332
Int. Cl.³ A61F *1/16, 1/24*
U.S. Cl. 3—13 **22 Claims**

1. As an article of manufacture, an optically finished intraocular lens element having a generally circular periphery about its optical axis, and a mounting adapter for said lens element, said adapter comprising two circumferentially continuous annular body members having a circular inner edge of diameter less than the diameter of said lens element, said body members being adjacent opposite axial sides of the peripheral region of said lens element and being connected to each other within a geometrical annulus radially outside said lens element, first lens-positioning foot means extending radially outwardly of the periphery of said lens element and having radially stiff

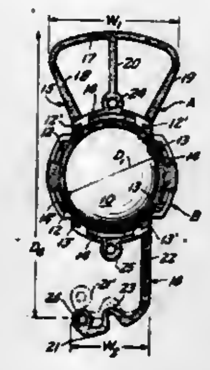

integral connection to one of said body members, and second lens-positioning foot means extending radially outwardly of the periphery of said lens element and having radially compliant integral connection to said one body member, said first and said second foot means being asymmetrically defined but in generally diametrically opposed relation to each other.

4,298,996
MAGNETIC RETENTION SYSTEM FOR INTRAOCULAR LENS
Ronald W. Barnet, 523 West Vista, Phoenix, Ariz. 85021
Filed Jul. 23, 1980, Ser. No. 171,413
Int. Cl.³ A61F *1/16, 1/24*
U.S. Cl. 3—13 **9 Claims**

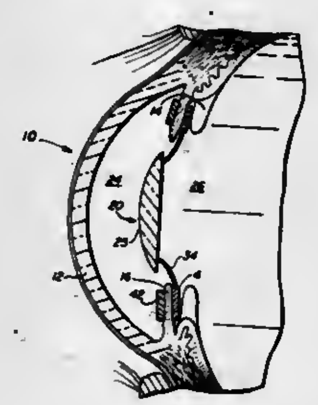

1. An intraocular lens for implant in the human eye in the anterior or posterior chamber in the area of the iris after removal of the lens, said lens comprising:
(a) a light focusing lens member having a posterior and an anterior surface;
(b) a support member extending from said lens to a location corresponding to the iris;
(c) a first fixation member carried on said support member and adapted to be positioned at one of the anterior or posterior sides of the iris; and
(d) a second fixation member adapted to be positioned at the opposite side of the iris, at least one of said first and second fixation members having magnetic characteristics whereby a mutual trans-iris magnetic attraction exists therebetween to retain the lens in proper condition.

4,298,997
DEVICE FOR INHIBITING THE FORMATION OF FIBROUS CAPSULAR CONTRACTURES IN SILICONE BREAST IMPLANTS AND METHOD
F. James Rybka, 1153 Mariemont Ave., Sacramento, Calif. 95825
Filed Oct. 23, 1979, Ser. No. 87,326
Int. Cl.³ A61F *1/24*
U.S. Cl. 3—36 **6 Claims**

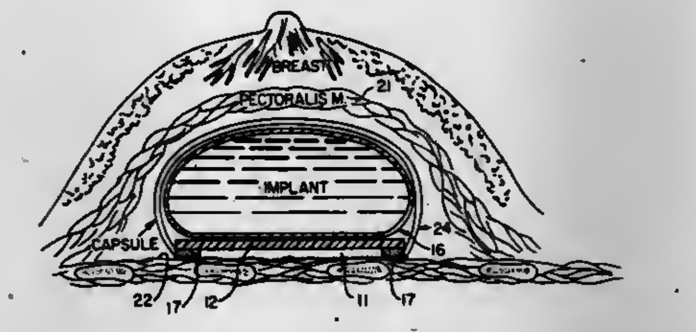

1. Device for inhibiting the formation of fibrous capsular contractures in surgically installed breast implants comprising:
a. a disc of thin flexible impervious, sheet material, said disc having a shape in plan approximately the same as the shape in plan of the implant; and,
b. a band of material secured to said disc in congruent marginal edge relation, said band being porous to permit the ingrowth of subjacent tissue from the rib cage and said disc being in unattached engagement with the implant overlying said disc in substantially symmetrical relation in plan as the incision resulting from the surgical installation is closed.

4,298,998
BREAST PROSTHESIS WITH BIOLOGICALLY ABSORBABLE OUTER CONTAINER
Sadeque S. Naficy, 9343 N. Loop East, Houston, Tex. 77029
Filed Dec. 8, 1980, Ser. No. 214,449
Int. Cl.³ A61F *1/24*
U.S. Cl. 3—36 **26 Claims**

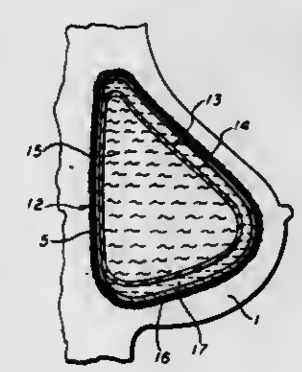

1. A breast prosthesis comprising an inner core of biologically compatible, non-absorbable material, and
biologically absorbable means surrounding said core for effecting capsule formation at a selected and controlled distance from said core without contractive pressure thereon after surgical implantation.

4,298,999
WOMEN'S PROTECTIVE KEY RING
Maureen E. Mackey, 524 Amherst Dr., S.E., Albuquerque, N. Mex. 87106
Filed Jun. 13, 1980, Ser. No. 159,160
Int. Cl.³ A44B *15/00*
U.S. Cl. 7—170 **11 Claims**

1. Key ring for holding in an owner's hand for defensive purposes and for holding keys, comprising:
(a) An ornament-striker, having an inner surface and an outer surface, having length and width roughly comparable to the length and width, respectively, of the front of the owner's clenched fist, said ornament-striker being essentially flat on the inner surface thereof;
(b) A handle of inside length exceeding the width of said

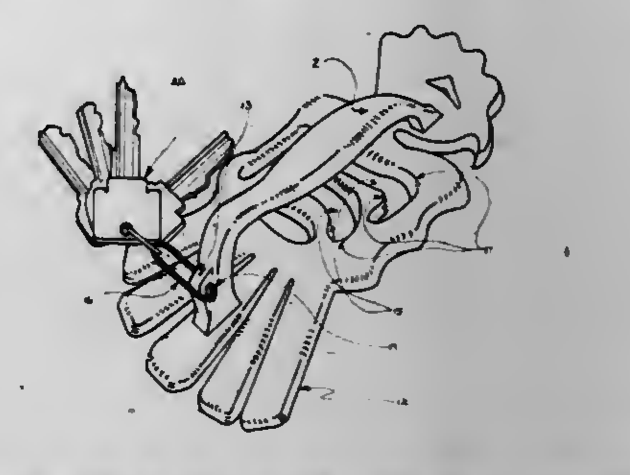

owner's hand across four fingers, said handle being joined to said ornament-striker near each end of the inner surface thereof, the inside aperture of said handle just exceeding the thickness of said owner's fingers;
(c) Means, secured to said handle, for securing keys to said key ring.

4,299,000
METHOD FOR THE PRODUCTION OF THREADED NUTS BY COLD FORMING
Friedrich-Karl Koch, Krefeld, Fed. Rep. of Germany, assignor to Peltzer & Ehlers, Krefeld, Fed. Rep. of Germany
Continuation of Ser. No. 867,481, Jan. 6, 1978, abandoned. This application Aug. 22, 1979, Ser. No. 68,719
Claims priority, application Fed. Rep. of Germany, Jan. 7, 1977, 2700546
Int. Cl.³ B21D *53/24;* B21K *1/68*
U.S. Cl. 10—86 F **2 Claims**

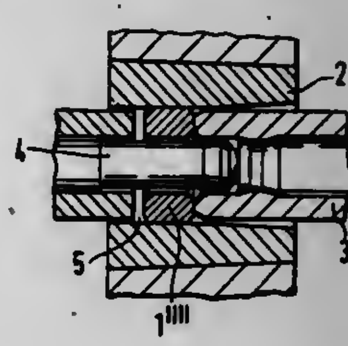

1. A method for the production of hexagonal nuts by cold forming comprising providing a round blank, shaping said blank by pressure to form a rough nut having a hexagonal configuration wherein the distances across the flats of the hexagon are greater than in the finished nut, finish-sizing said rough nut by forcing said rough nut into a shaping die and over a punch concentrically located in a fixed position within said die to substantially simultaneously punch a central opening in said rough nut using said punch and to reduce the distances across the flats of the hexagon to final size by compressing said rough nut in said shaping die.

4,299,001
NUT TAPPING MACHINE
Sean J. Cleary, Loughrea, and Noel L. Furlong, Galway, both of Ireland, assignors to The Institute for Industrial Research and Standards, Dublin, Ireland
Filed Sep. 11, 1979, Ser. No. 74,576
Int. Cl.³ B23G *1/44*
U.S. Cl. 10—133 **21 Claims**

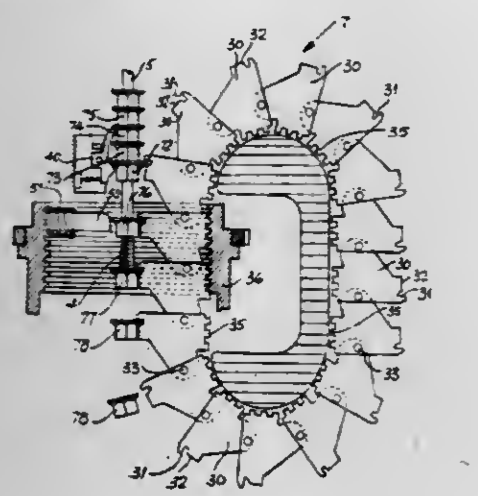

1. A tapping machine comprising:
a base support;
an elongated tap, having a tap shank and a threaded screw cutting portion, rotatably mounted in the support;
a tap drive mounted on the base support;
a tap drive chuck assembly for imparting rotary movement to the tap from the tap drive having two sets of shank embracing driving chucks longitudinally spaced apart relative to the tap shank;
means for maintaining at least one of the sets of chucks always in engagement with the tap shank and for releasing the driving chucks sequentially from engagement with the tap shank to allow the passage of a blank along the shank;
a blank chuck assembly, having a set of movable jaws arranged around the tap, each jaw having a first flat face for engagement with the exit surface of the blank to true the said exit surface of the blank relative to the tap axis;
means for moving the jaws radially inwards and outwards relative to the tap; and
means for imparting relative linear movement along the tap axis between the threaded screw cutting portion of the tap and the blank chuck assembly.

4,299,002
ARRANGEMENT FOR USE ON A VEHICLE FOR TRANSPORTING PORTABLE BRIDGES
Gerhard Wagner, Mainz-Lerchenberg; Dieter Nägel, Neu-Ulm, and Georg Kessler, Oberwesel, all of Fed. Rep. of Germany, assignors to Magirus-Deutz Aktiengesellschaft, Ulm, Fed. Rep. of Germany
Filed Jan. 11, 1979, Ser. No. 47,583
Claims priority, application Fed. Rep. of Germany, Jun. 8, 1978, 2825060
Int. Cl.³ E01D *15/12*
U.S. Cl. 14—2.4 **13 Claims**

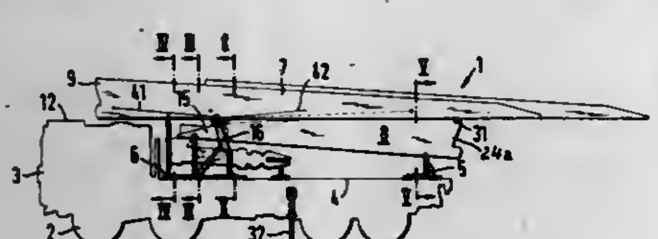

1. An arrangement for use on a convertible load carrying vehicle, especially a truck independently usable also alternately when required for securely transporting portable bridges, said bridges including sections adapted to be arranged one above the other and being adapted to be respectively loaded onto and unloaded from said vehicle from and onto a bridge placing apparatus; said vehicle including a frame, and a cab mounted on the forward end of said frame; said arrangement comprising in combination therewith:
a first independent support frame releasably securable near said cab on said frame of said vehicle for supporting bridge sections;
a pivot drive unit operatively connectible to said first independent support frame for moving sections of said portable bridge in the longitudinal direction of said vehicle; and
a second independent support frame releasably securable on said frame of said vehicle at a predetermined distance more remote from said cab than said first independent support frame for also supporting bridge sections.

4,299,003
VEHICLE WASHING APPARATUS FOR WASHING THE FRONT, SIDES AND REAR OF A VEHICLE
George T. Ennis, Playa Del Ray, Calif., assignor to N/S Car Wash Enterprises, Inc., Inglewood, Calif.
Division of Ser. No. 883,514, Mar. 6, 1978, Pat. No. 4,225,995. This application Sep. 17, 1980, Ser. No. 188,037
Int. Cl.³ B60S *3/06*
U.S. Cl. 15—53 AB **13 Claims**

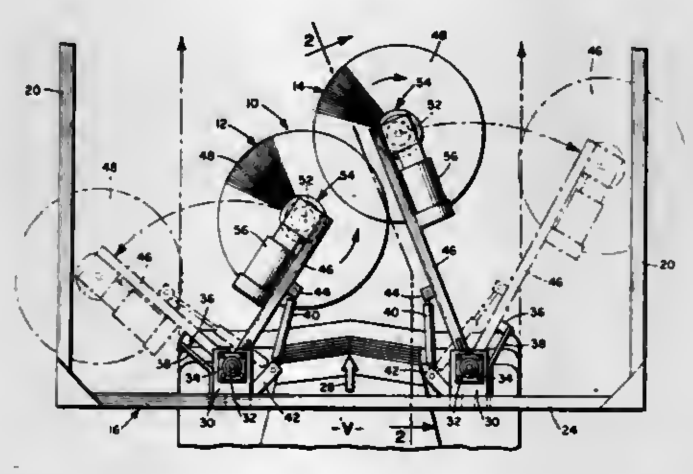

1. A vehicle washing apparatus for washing a vehicle moving relative thereto comprising:
supporting frame means extending over a predetermined path of a vehicle to be washed;
a single brush support arm pivotally mounted at one end by pivot means directly to said frame means at a point overhead inside said path; said pivot means being fixedly secured to said frame means to preclude forward or lateral movement of said pivot means relative to said frame means;
a rotatable brush for washing the vehicle;
means rotatably mounting said brush at the opposite end of said arm to normally position said brush in a position substantially underneath said opposite end and in said path to be contacted by the vehicle; and
means for rotating said brush in a direction which causes said brush to walk along the surface of the vehicle due to the reactive force between the surfaces of the vehicle and said brush to wash one or more of the front, side, and rear surfaces of the vehicle.

4,299,004
POWERED HAND TOOL FOR USE IN HOUSEHOLD CLEANING OPERATIONS
Lorine E. Lancaster, P.O. Box 1016, San Joaquin, Calif. 93660
Filed Dec. 12, 1979, Ser. No. 102,643
Int. Cl.³ A46B *13/02*
U.S. Cl. 15—97 R **1 Claim**

1. A powered hand tool particularly suited for use in cleaning household utensils, such as cooking pots and the like, comprising:
a water-tight housing of an elongated configuration having a handle defined therein and extended in parallelism with the longitudinal axis of the housing;
an electrically energizable AC motor mounted in the housing having a rotary output shaft, and means including a lead for electrically connecting the motor to an external source of AC electrical energy;
means defining in said housing a pair of wells mutually spaced 90° apart relative to the longitudinal axis of said housing;
means including a pair of sockets and a pair of perpendicularly related drive shafts supporting said sockets for rotation within said pair of wells about a pair of normally related axes, the socket of said pair being characterized by a key-way extended axially thereof;
means for imparting continuous unidirectional rotation to each shaft of said pair of shafts including a speed-reduction gear train interconnecting said shafts with said motor; and
a plurality of polishing wheels, each wheel having an axially projected shaft characterized by a key integrally related therewith and projected radially therefrom adapted to be received by a key-way defined in each socket of said pair, whereby said polishing wheels are interchangeably related to said sockets.

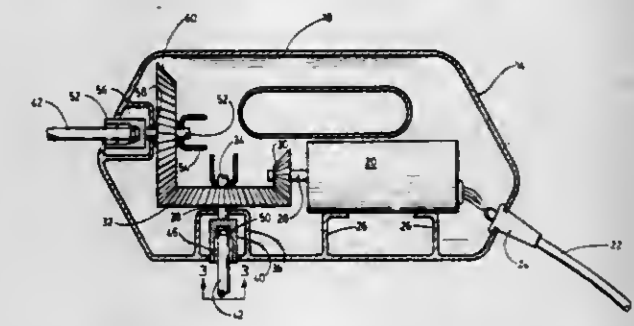

4,299,005
APPLICATOR
Harold B. Brown, 2951 Village Dr., Marietta, Ga. 30062
Filed Oct. 3, 1979, Ser. No. 81,462
Int. Cl.³ B05C *1/06;* **A47K** *7/03*
U.S. Cl. 15—244 A **7 Claims**

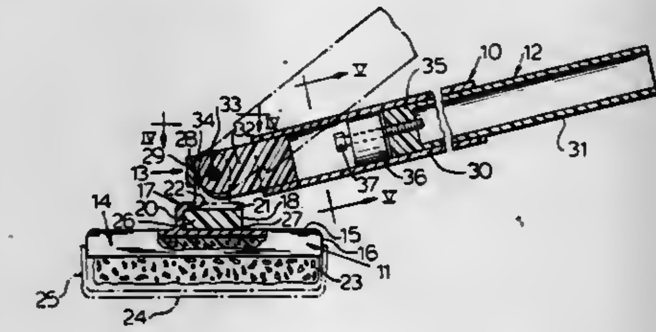

1. An applicator manipulated by the hand of a user to selectively apply fluids to all portions of the skin of a user which comprises a head, an elongated handle pivoted on said head, means limiting swinging of the handle to less that a quadrant from a position substantially parallel with the head to an inclined angle position relative to the head for causing the handle to transmit a pushing and pulling action on the head, a resilient absorbent pad carried by the head and presenting a surface area for rubbing on the skin of a user, and a removable cover on the head isolating the pad during periods of non-use.

4,299,006
ELASTIC DRIP GUARD FOR PAINT BRUSHES
Miguel M. Cruz, 112 SW. 96th Ave., Miami, Fla. 33174
Filed Feb. 19, 1980, Ser. No. 122,269
Int. Cl.³ A46B *17/00*
U.S. Cl. 15—248 R **1 Claim**

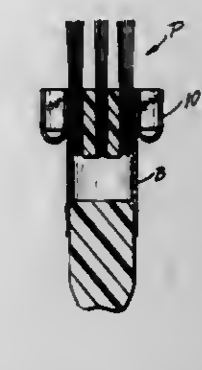

1. An elastic drip guard for paint brushes comprising, in combination, a flat loop of elastic material, said loop being transversely foldable along its length to provide a trough extending in the axial direction of said loop, and a pair of spacer members receivable in said loop trough, said loop being of such peripheral size as to stretchingly fit in embracing relation about the body portion of a paint brush at the base of the bristles thereof with the trough opening extended outwardly towards the ends of the bristles, the spacer members of the elastic loop being adapted for placement at opposite ends around the brush body portion to prevent collapse of the walls of said U-shape elastic member defining said trough.

4,299,007
VACUUM CLEANER FOR PROFESSIONAL AND HOUSEHOLD PURPOSES
Niklaus Hug, Romanshorn, Switzerland, assignor to Rommag P. Wörwag & Co., Romanshorn, Switzerland
Filed Dec. 26, 1979, Ser. No. 106,482
Claims priority, application Fed. Rep. of Germany, Dec. 23, 1978, 2856116
Int. Cl.³ A47L *9/28*
U.S. Cl. 15—339 **8 Claims**

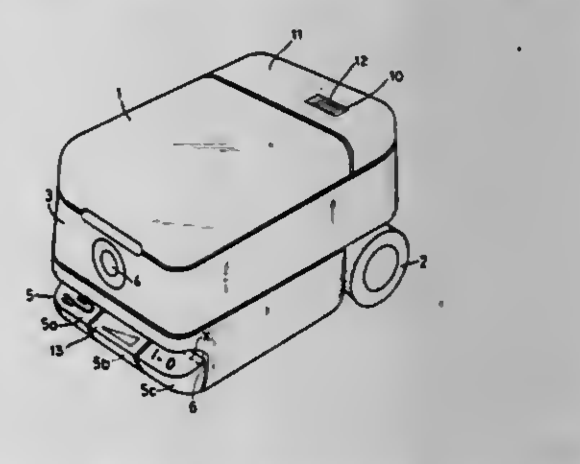

1. A vacuum cleaner for professional and household purposes, which comprises:
a housing; and
actuating elements operatively connected to said housing for initiating individual functions of said vacuum cleaner, said actuating elements being adapted to be actuated by foot and being combined in the form of a pedal strip arranged in the lower part of one side of said vacuum cleaner housing;
said pedal strip being arranged on the suction side of said vacuum cleaner housing;
said suction side including an opening for a suction hose, said pedal strip being arranged below said opening;
said pedal strip extending over the width of said side, and forming the lower end thereof;

said pedal strip lying within the outer contour of said housing;
said housing including a free space above said pedal strip for the introduction of a foot, a motor blower, one of said elements being a pedal for changing the suction capacity of said motor blower, and a device coupled with said last mentioned pedal for indicating the adjusted suction capacity.

4,299,008
CURTAIN RAIL
Bernard Burns, 1448 Paisley Rd. West, Glasgow G52 1SS, Scotland
Filed Aug. 29, 1979, Ser. No. 70,715
Claims priority, application United Kingdom, Aug. 31, 1978, 35130/78
Int. Cl.³ A47H *1/06*
U.S. Cl. 16—95 D **6 Claims**

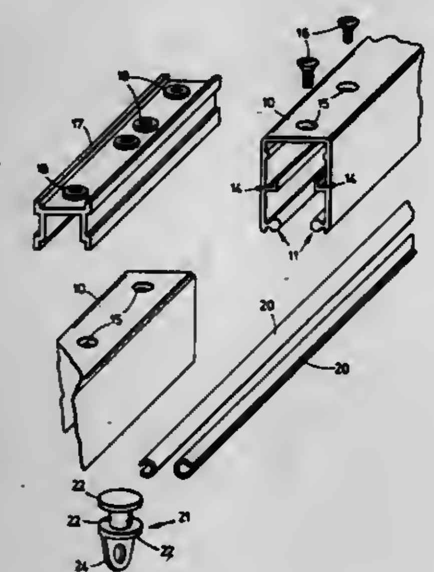

1. A curtain rail comprising an assembly of a plurality of lengths of support rail, part of the cross-sectional configuration of each said length defining a pair of mutually parallel and mutually spaced longitudinal ribs which project laterally inwards of the support rail, and a pair of plastics glide tracks of a resiliently yieldable material each embracing a respective one of said ribs and each extending on all of the said lengths of said assembly so as to bridge all inter length joints, the cross-sectional configurations of the ribs and tracks being generally mutually complementary and the tracks being fitted to the assembly by press-fitting manually and self-retaining on the ribs.

4,299,009
MACHINE FOR SEPARATING THE BONE AND THE FLESH FROM THE FEET OF SLAUGHTERED UNGULATES
Claude Tournier, Lioujas, 12000 Rodez, France
Filed Dec. 12, 1979, Ser. No. 102,994
Claims priority, application France, Mar. 28, 1979, 79 08278
Int. Cl.³ A22C *17/04*
U.S. Cl. 17—1 G **8 Claims**

1. Machine for boning feet of ungulate animals, comprising: a fixed holding means for holding a foot at one end thereof, a movable extraction member for gripping a skin portion of said foot, said extraction member being movable along a path in a horizontal plane beneath said foot between a first position close to said holding means and a second position remote from said holding means, wherein said holding means comprises a set of jaws relatively movable in a direction perpendicular to said

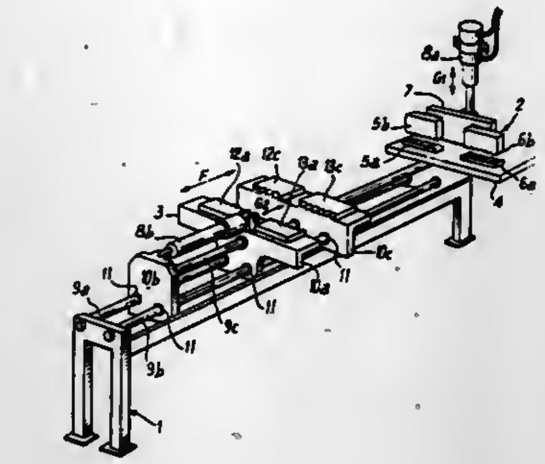

plane, and said extraction member comprises a set of jaws relatively movable in a direction parallel to said plane.

4,299,010
ANIMAL PELTING SYSTEM
Angus A. J. Robertson, Rangiora; Carey J. France, Masterton, and Colin A. Roberts, Hamilton, all of New Zealand, assignors to A. J. Park & Son, Wellington, New Zealand
Filed Mar. 12, 1980, Ser. No. 129,823
Claims priority, application New Zealand, Mar. 29, 1979, 190042
Int. Cl.³ A22B *5/16*
U.S. Cl. 17—50 **20 Claims**

1. A method of removing the pelt or skin from a carcass of an animal such as a sheep, a cattle beast, a goat, a pig or the like which comprises the steps of:
working up the carcass so that the skin or pelt is removable substantially as an envelope from regions extending substantially from brisket regions to rump regions of the carcass,
clamping with clamping means portions of the worked up skin or pelt about the trunk of the animal at about the level of the brisket region so as to hold the worked up regions of the skin or pelt away from the carcass with the inside of the skin or pelt exposed substantially in a trunk encircling manner,
freeing the skin or pelt from the carcass over its trunk from the brisket region to the rump region by causing a mechanical device to be inserted between the skin or pelt and the carcass substantially to about the rump level of the trunk, the said device substantially encircling the trunk of the carcass during such insertion,
holding said mechanical device at a position between the skin or pelt and the carcass at the region of the trunk thereof of which the rump substantially forms part and
causing a relative movement between (i) the carcass and (ii) the skin or pelt, the clamping means and said mechanical device so as to withdraw substantially all, if not all, of the rear legs of the animal from the skin or pelt.

4,299,011
WEB TAKE-OFF APPARATUS AT THE DOFFER OF A CARD
Hansjoerg Rothen, Ennetaach; Heinrich Rutschmann, Wiesendangen, and Hans Rutz, Winterthur, all of Switzerland, assignors to Rieter Deutschland GmbH, Fed. Rep. of Germany
PCT No. PCT/EP78/00027, § 371 Date Aug. 24, 1979, § 102(e) Date Aug. 24, 1979, PCT Pub. No. WO79/00438, PCT Pub. Date Jul. 12, 1979.
PCT Filed Dec. 9, 1978, Ser. No. 142,060
Claims priority, application Fed. Rep. of Germany, Dec. 27, 1977, 2758337
Int. Cl.³ D01G *15/46, 15/96*
U.S. Cl. 19—106 R **17 Claims**

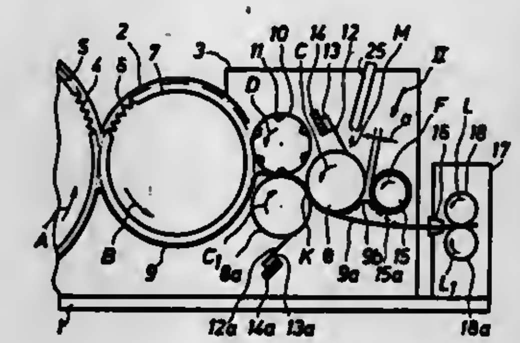

1. A card comprising
a doffer roll for doffing of a fibrous web therefrom;
a pair of delivery rolls for delivering the doffed web from said doffer roll into a predetermined normal path, said delivery rolls forming a nip line for passage of a doffed web therethrough from said doffer roll;
a condenser funnel for receiving the web delivered from said delivery rolls along said predetermined normal path; and
a web deflecting device between said delivery rolls and said condenser funnel, said web deflecting device being spaced from at least one of said delivery rolls at a distance of at least 0.1 millimeters and spaced from said predetermined normal path whereby a web carried on said one delivery roll downstream of said nip line is caught by said deflecting device and brought back to said predetermined normal path.

4,299,012
HOSE CLAMP
Hans Oetiker, Oberdorfstrasse 21, CH-8810 Horgen, Switzerland
Filed May 8, 1979, Ser. No. 36,980
Int. Cl.³ B65D *63/00;* **F16L** *47/00*
U.S. Cl. 24—19 **56 Claims**

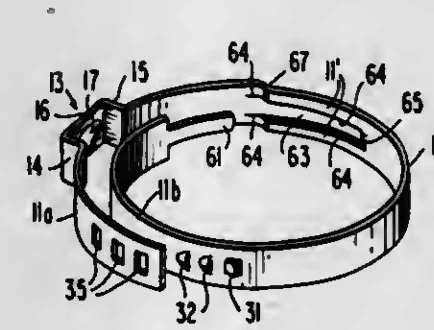

1. A clamp structure comprising clamping band means having open ends, means mechanically interconnecting the open ends of the band means including several outwardly extending hook means in an inner band portion operable to engage in corresponding aperture means provided in an outer band portion, and means in the clamp structure for tightening the clamping band means about an object to be fastened, characterized in that at least one hook means is a suspension hook means adapted to extend through a corresponding aperture means, and in that at least another hook means is a cold-deformed support hook means having force-engaging abutment surface means extending out of the plane of said inner band portion while said support hook means is integral with said inner band portion over at least a substantial part of its remaining contour, said suspension hook means being operable to initially engage the outer band portion by extending into the corresponding aperture means and thereafter to guide the inner and outer band portions with respect to one another while the circumferentially directed clamping forces which occur during tightening of the clamp structure by said tightening means, are absorbed principally by said cold-deformed support hook means engaging with the abutment surface means thereof against the edge of a respective aperture means.

4,299,013
PAPER CLIPS
Walter B. Lincoln, 357 Bay Shore Dr., Barnegat, N.J.
Division of Ser. No. 43,322, May 29, 1979, Pat. No. 4,261,098, which is a division of Ser. No. 926,661, Jul. 21, 1978, abandoned. This application Dec. 11, 1980, Ser. No. 215,240
Int. Cl.³ B42F *1/02*
U.S. Cl. 24—67.9 **7 Claims**

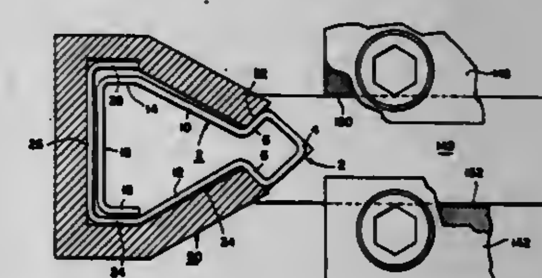

1. A spring wire clip for clipping together sheets having a forward end and a rear end and adapted to be driven by a machine having a pusher, comprising:
a head at the rear end of the clip adapted to be engaged by said pusher,
a first pair of legs connected to the head and extending forwardly beyond the width of the head,
a transverse leg connected at one end to the forward end of each of said first pair of legs,
said transverse legs both extending inwardly and being adjacent to each other, and
a rearwardly extending return leg connected to the other end of each transverse leg and lying forward of the head,
all of said clip lying in substantially the same plane and at least a portion of each return leg lying beyond the width of the head.

4,299,014
BUCKLE FOR SAFETY BELTS
Kenneth H. Wood, Brighton, Australia, assignor to Moxham Industrial Pty. Ltd., South Melbourne, Australia
Filed Sep. 4, 1979, Ser. No. 72,298
Claims priority, application Australia, Sep. 1, 1978, PD5779
Int. Cl.³ A44B *11/10, 11/00*
U.S. Cl. 24—197 **6 Claims**

1. A plate type buckle for a safety belt of the kind formed of flat webbing, said buckle comprising a main plate which is attached to one end of the belt and a top plate which is slidably attached in a manner allowing adjustment of the working

length of the belt, said belt being turned back in a loop around a webbing bar formed between adjacent apertures in said top plate to facilitate said adjustment, said main plate having an aperture therethrough capable of passing said loop and a slot in each of opposed longitudinally extending sides of said aperture to extend the width thereof for facilitating passage of said top plate in edgewise orientation with respect to said main plate, one slot being deeper than the other and the width of the top plate beyond the width of the belt at respective sides of said loop being greater on the one side than on the other to thereby substantially correspond to the depth of respective ones of said slots so that said top plate and loop may pass through said main plate aperture when said webbing is not twisted but are prevented from passing therethrough when said webbing is twisted through 180°.

4,299,015
PROCESS FOR SPACE DYEING AND TEXTURING SYNTHETIC YARNS
Frederick Marcus, 803 Briarwood Rd., Newtown Square, Pa. 19073; Richard Dikeman, R.D. #3, Box 850, Oxford, Pa. 19363, and Allan A. Wiggins, Jr., 606 N. Brandywine St., West Chester, Pa. 19380
Filed Jul. 23, 1979, Ser. No. 59,640
Int. Cl.³ D02G *1/12, 1/20*
U.S. Cl. 28—221 **5 Claims**

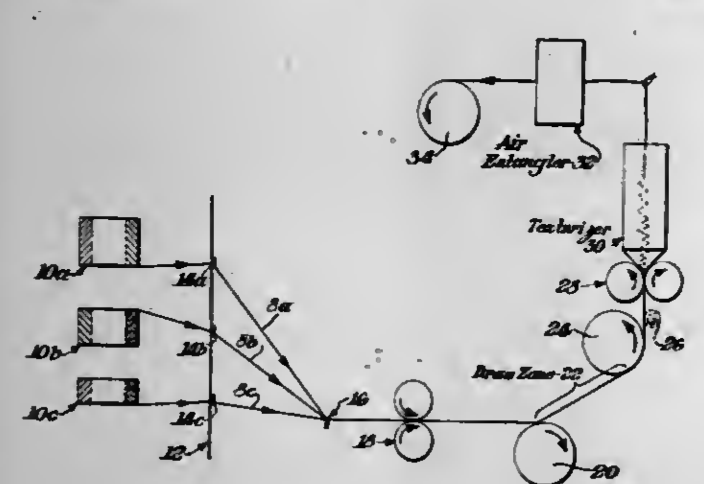

1. A process for producing an intermittently dyed, textured synthetic polymeric yarn wherein a multiplicity of feed yarn packages having varying diameters is employed to produce a multiple ply product yarn, which process comprises:
(a) applying to at least one end of at least two of said feed yarn packages a dispersion of a sublimatable dye pigment,
(b) drying the dyed yarn packages,
(c) withdrawing feed yarn from each of said feed yarn packages having varying diameters and directing said yarn ends to and around a first rotating predraw roller and thence to and around a second, rotating draw roller rotating at a faster, peripheral speed than said first roller to impart draw to said yarns,
(d) feeding said dyed and drawn yarns to and through a texturizer, and
(e) accumulating said dyed, drawn and texturized yarn on a takeup device.

4,299,016
CATHODE RAY TUBE NECK CLEANSING-SCAVENGING MEANS AND METHOD
Thomas P. DeFranco, Norridge, and Armando V. Marino, Chicago, both of Ill., assignors to Zenith Radio Corporation, Glenview, Ill.
Filed Dec. 3, 1979, Ser. No. 99,460
Int. Cl.³ H01J *9/38*
U.S. Cl. 29—25.11 **8 Claims**

1. For use in the manufacture of a cathode ray tube having a glass envelope including a neck for enclosing an electron gun, cleansing-scavenging means for removing detritus from the inner surface of said neck before the installation of said gun comprising:
probe means for insertion into said neck including scrubbing means for dislodging detritus and having at a first end thereof an expansible and contractible scavenging member including a peripheral surface comformable to said inner surface of said neck for exerting, when expanded, outward scavenging pressure against said inner surface;

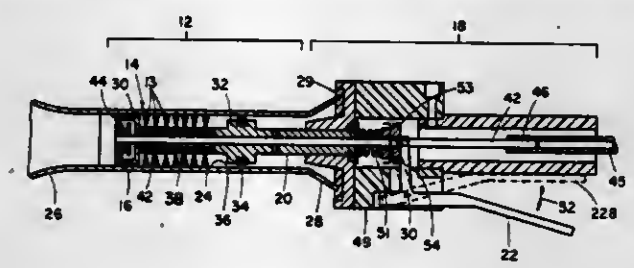

handle means attached to the second end of said probe means for manipulating said probe means and having associated means for expanding and contracting said scavenging member;
such that after the detritus is dislodged from said inner surface of said neck by said scrubbing means, and as said probe means is withdrawn from said neck, said scavenging member when expanded scavenges the detritus from said neck.

4,299,017
APPARATUS FOR SMOOTH ROLLING THE BEARING SEATS OF CRANKSHAFTS
William P. Gottschalk, Mt. Clemens, Mich., assignor to W. Hegenscheidt Gesellschaft mbH, Erkelenz, Fed. Rep. of Germany
Filed May 11, 1979, Ser. No. 38,219
Int. Cl.³ B24B *39/00, 39/04*
U.S. Cl. 29—90 R **4 Claims**

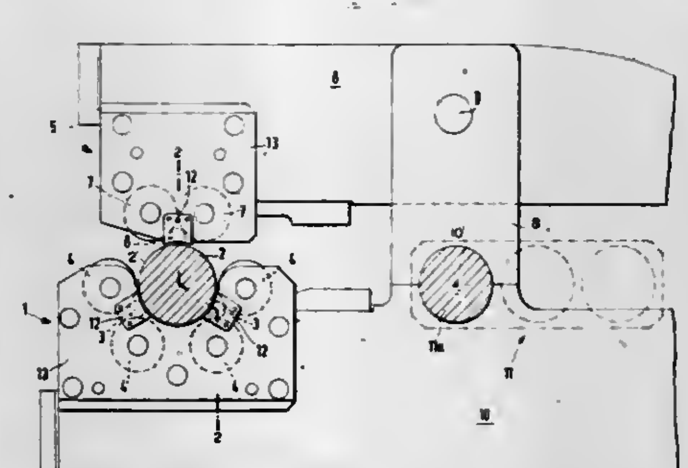

1. An apparatus for smooth rolling the bearing seats of crankshafts having axial guide faces adjacent each end of each bearing seat, comprising tool roller means (3, 6), support idler roller means (4, 7) centerless and operatively supporting said tool roller means (3, 6), tool support means (13) operatively supporting said support idler roller means (4, 7), glide plate means (12) operatively secured to said tool support means (13) and having axially inwardly facing sides for holding the respective tool roller means (3, 6) at each end thereof, said glide plate means further having axially outwardly facing sides, said glide plate means covering the respective tool roller end to such an extent that said axially facing sides of said glide plate means may bear against the respective guide face (21) of the corresponding crankshaft bearing seat to thereby prevent the tool roller ends from contacting said guide faces (21) to avoid damage to the guide faces (21) by the tool roller means.

4,299,018
ROLL FOR USE UNDER HIGH OR LOW TEMPERATURE CONDITIONS
Kenneth Bickerstaff, Widnes, and John D. Brewin, St. Helens, both of England, assignors to Pilkington Brothers Limited, St. Helens, England
Filed Apr. 9, 1979, Ser. No. 28,440
Claims priority, application United Kingdom, Apr. 14, 1978, 14852/78
Int. Cl.³ B21B *31/08;* **B60B** *7/06*
U.S. Cl. 29—129 **3 Claims**

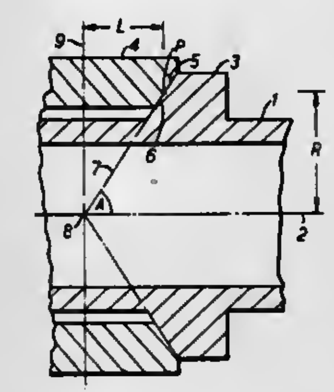

1. A roll for use under high or low temperature conditions, comprising at least one tire member having a frusto-conical surface, and a retaining member of a different material from the tire member and having a matching frusto-conical surface which is engaged by the frusto-conical surface of the tire member, the angle of the cone on which said matching frusto-conical surfaces lie being such that differential thermal expansion between the tire member and the retaining member causes sliding movement only of the frusto-conical surfaces relative to each other witout substantially affecting the pressure therebetween.

4,299,019
DIE-SET COMBINATION FOR MAKING PIN-BACK BADGES
Malcolm J. Roebuck, LaSalle, Ill., assignor to Badge-A-Mint Ltd., LaSalle, Ill.
Filed Mar. 26, 1979, Ser. No. 24,154
Int. Cl.³ B23P *11/00*
U.S. Cl. 29—243.52 **2 Claims**

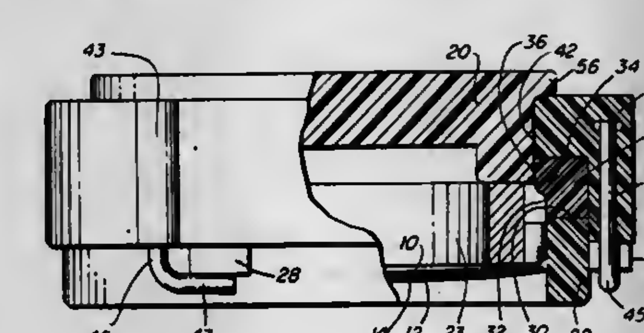

1. An all plastic die-set for use in making permanent badges out of a conventional pin-back, shell having a marginal flange and an indicia-bearing paper assembly, and a clear plastic covering therefor, comprising:
(a) a cylindrical forming ring having a flat face normal to the ring axis at each end and an inside diameter substantially equal to the diameter of the badge to be made and having an outer sidewall;
(1) said ring having three equi-distantly spaced flanges on the outer sidewall of said ring spaced medially between said faces;
(b) a cylindrical pressure member having an outside diameter gauged for sliding fit into said forming ring, a radial flange at one end, and a cavity at the other end, the margin of the cavity having an upstanding circular flange and an inwardly extending annular wall;
(c) a hollow cylindrical forming die having an outer wall, a shoulder at one end, the inside diameter of which is gauged to slidably receive said forming ring, the inside diameter of the forming die at said one end being equal to the outside diameter of said forming ring to provide a first wall which terminates inwardly of the die in a concavely-curved shoulder to define the inner end of a second wall extending to the other end of the forming die, the inside diameter of the second wall being substantially the same as the inside diameter of the shell and its flange for the badge to be made;
(1) three equi-distantly spaced elongated seats formed on said outer wall;
(2) a rotary latch means in said seats having a right angled arm coacting with said flanges on the sidewall of said ring to removably anchor said ring to said die;
(d) a cylindrical hammer member having an outside diameter gauged for sliding fit into said other end of the forming die, one end of said hammer member having an integrally formed, enlarged surface, the interior of said hammer member being hollow below said enlarged surface; and
(e) a hard plastic pressure ring.

4,299,020
FLYWHEEL PULLER
Joseph F. Grego, Jr., 709 Ogletown Rd., Newark, Del. 19711
Filed Mar. 26, 1980, Ser. No. 134,176
Int. Cl.³ B23P *19/04*
U.S. Cl. 29—259 **16 Claims**

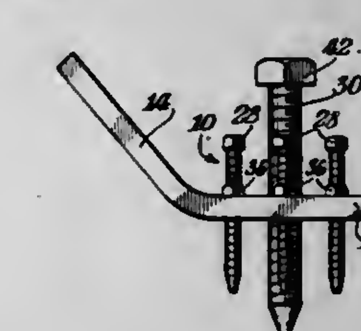

1. A puller for flywheels and the like removably attached to an engine having a crankshaft, said puller comprising a first planar plate section, a second planar plate section attached to and extending away from said first plate section at an obtuse angle thereto whereby said plate sections are in different planes, crankshaft manipulating means on said first plate section for facilitating the manipulation of the crankshaft relative to the flywheel for imparting relative linear movement between the crankshaft and the flywheel, said crankshaft manipulating means including a center bore extending completely through said first plate section for being selectively disposed in line with the crankshaft, flywheel engaging means on said first plate section for selectively detachably mounting said first plate section to the flywheel, said first plate section flywheel engaging means including at least one set of coarcuate holes extending completely through said first plate section concentrically around said first plate section center bore for alignment with a corresponding set of holes in the flywheel whereby mounting members may be selectively inserted through said holes in said first plate section and engaged in the corresponding flywheel holes, said first plate section center bore having a larger diameter than the diameter of said first plate section holes, crankshaft manipulating means on said second plate section for facilitating the manipulation of the crankshaft relative to the flywheel for imparting relative movement between the crankshaft and the flywheel, said crankshaft manipulating means including a center bore extending completely through said second plate section for being selectively disposed in line with the crankshaft, flywheel engaging means on said second

plate section for selectively mounting said second plate section to the flywheel, said second plate section flywheel engaging means including at least one set of coarcuate holes extending completely through said second plate section concentrically arranged around said second plate section center bore for alignment with a corresponding set of holes in the flywheel whereby mounting members may be selectively inserted through said holes in said second plate section and engaged in the corresponding flywheel holes, and said second plate section center bore having a larger diameter than the diameter of said second plate section holes.

4,299,021
AXIAL IMPACT TOOL
Luther M. Williams, 145 Whitehall Apts., 3218 Hikes La., Louisville, Ky. 40220
Filed Nov. 19, 1979, Ser. No. 95,345
Int. Cl.³ B23P *11/00;* **B25C** *1/02*
U.S. Cl. 29—432 **3 Claims**

1. A method of driving a fastening means in the form of a staple, into a substrate, which comprises the steps of:
A. placing an impact rod with a heavy handle and a magnetic tip having a receiving slot on its contact and striking surface into one end of a guide rod;
B. engaging the bight of said staple into said receiving slot in the magnetic tip of said impact rod;
C. retracting said impact rod and said staple magnetically connected thereto;
D. extending said impact rod to partially drive said staple into said substrate;
E. retracting said impact rod so as to disengage said receiving slot of said magnetic tip from the bight of said staple,
F. turning said impact rod and said magnetic tip about 90° so that the receiving slot lies more or less transversely to the bight of said staple; and
G. extending said rod fully in a driving stroke, to drive the exposed part of said staple fully into said substrate.
2. An axial impact tool comprising:
A. an elongated guide tube;
B. an elongated impact rod slidable within said guide tube;
C. a heavy handle fitted on one end of said rod and extending outside of said guide tube;
D. a magnetic fitting mounted at the other end of said impact rod and slidable into and out of the other end of said guide tube, said fitting having:
1. a diameter small enough to slide freely into and out of said tube,
2. a fastening means for mounting said fitting onto said impact rod, and
3. a contact and striking surface for holding a ferro-magnetic fastening member in driving position and for driving said ferro-magnetic fastening member into a substrate;
E. the improvement of an impact rod adjustable in length and comprised of two or more elongated pieces, in which:
1. one end of each piece contains a threaded recess,
2. the other end of each piece contains a threaded stud for fitting into the threaded recess of another piece,
3. so the impact rod can be shortened or lengthened by removal or addition of a separate elongated piece as required.

4,299,022
METHOD OF MAKING TRANSPORT DRUM
Klaus Kummerl, Nuremberg, Fed. Rep. of Germany, assignor to GTC Gibson Technical Company Limited, Vaduz, Liechtenstein
Filed Aug. 23, 1979, Ser. No. 69,190
Claims priority, application Fed. Rep. of Germany, Aug. 29, 1978, 2837658
Int. Cl.³ B23P *11/02*
U.S. Cl. 29—450 **3 Claims**

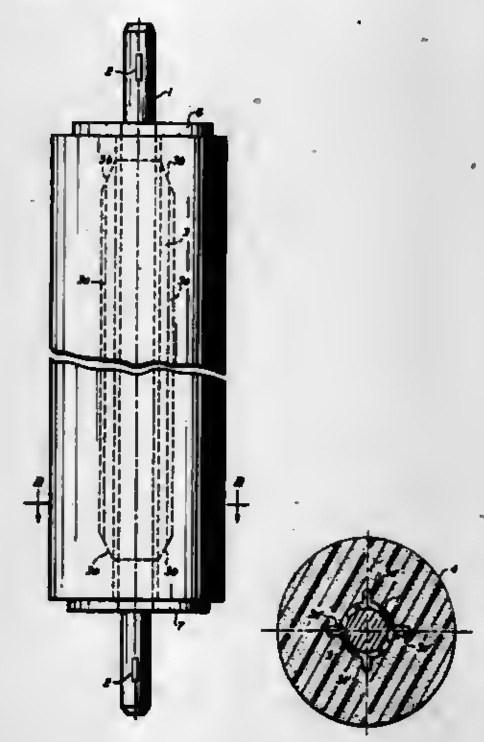

1. A method for manufacturing a transport drum for use in equipment for wet processing of photographic film and/or paper, comprising the steps:
a. drilling a hole in a piece of foam material;
b. forcing the foam material onto a supporting insert having external longitudinal ridges thereon with the insert extending into said hole and said ridges deforming the interior of said piece of foam material; and
c. shaping the piece of foam material into a cylindrical form while mounted on said supporting insert.

4,299,023
MACHINE FOR WINDING AND INSERTING COILS
Minoru Tanaka, Yokohama; Fumikazu Itoh, Fujisawa; Hiroshi Saitoh, Tokyo; Takashi Kobayashi, Fujisawa; Akiyoshi Sasaki, and Norio Akutsu, both of Hitachi, all of Japan, assignors to Hitachi, Ltd., Tokyo, Japan
Filed Jan. 3, 1980, Ser. No. 109,418
Claims priority, application Japan, Jan. 12, 1979, 54-1358
Int. Cl.³ H02K *15/06*
U.S. Cl. 29—564.1 **4 Claims**

1. A machine for winding and inserting coils of the type wherein a flier is rotated so as to wind the conductor drawn from the flier around two blades of an insertion tooling and an auxiliary plate located radially outwardly of said two blades and spaced apart therefrom by a predetermined distance, thereby forming a coil which is directly inserted into a mag-

netic core of a rotary electric machine, said machine CHARACTERIZED by the provision of a plurality of coil winding heads each having an insertion tooling with wedge guides, the blades of said insertion tooling being divided into alternating main and auxiliary blades which are spaced apart from each other at a predetermined distance, said auxiliary blades being so arranged as to be movable relative to said main blades, said

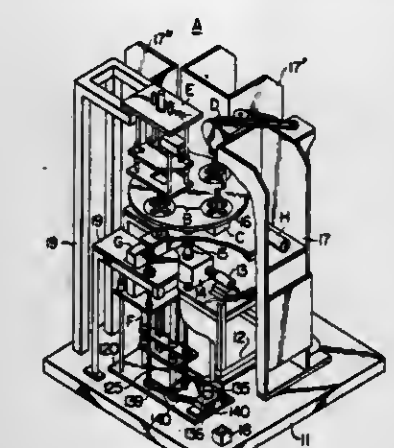

auxiliary blades being retracted from said main blades when a coil is wound around a bobbin formed by two main blades and one auxiliary plate, said auxiliary blades being to align with said main blades when the coils are inserted into said magnetic core; and
a drive or index means provided for each of said coil winding heads for intermittently rotating said coil winding head through a predetermined angle for indexing.

4,299,024
FABRICATION OF COMPLEMENTARY BIPOLAR TRANSISTORS AND CMOS DEVICES WITH POLY GATES
Leo R. Piotrowski, Indian Harbour, Fla., assignor to Harris Corporation, Melbourne, Fla.
Filed Feb. 25, 1980, Ser. No. 124,201
Int. Cl.³ H01L *21/76, 21/441*
U.S. Cl. 29—577 C **16 Claims**

1. In a process for fabricating an integrated circuit in a substrate having high performance, complementary bipolar transistors and complementary insulated gate field effect transistors including base, emitter, source and drain regions, collector, base and body contact regions, gate oxide, gate structure and device contacts the improvement comprising:
depositing N conductivity type impurities through openings in oxide mask layer to form emitter regions of an NPN bipolar transistors and N contact regions as the last device region forming step;
removing portions of said oxide mask layer to expose the channel of said field effect transistors;
forming a gate insulator layer on said substrate;
forming a layer of doped polycrystalline silicon on said gate insulator layer immediately after forming said gate insulator layer;
delineating said polycrystalline silicon layer to define field effect transistor gate structures and first level interconnects;
depositing by chemical vapor deposition a layer of phosphorous doped silicon oxide;
removing portions of said chemically vapor deposed layer to expose portions of said polycrystalline layer and portions of said oxide mask to expose portions of said substrate; and

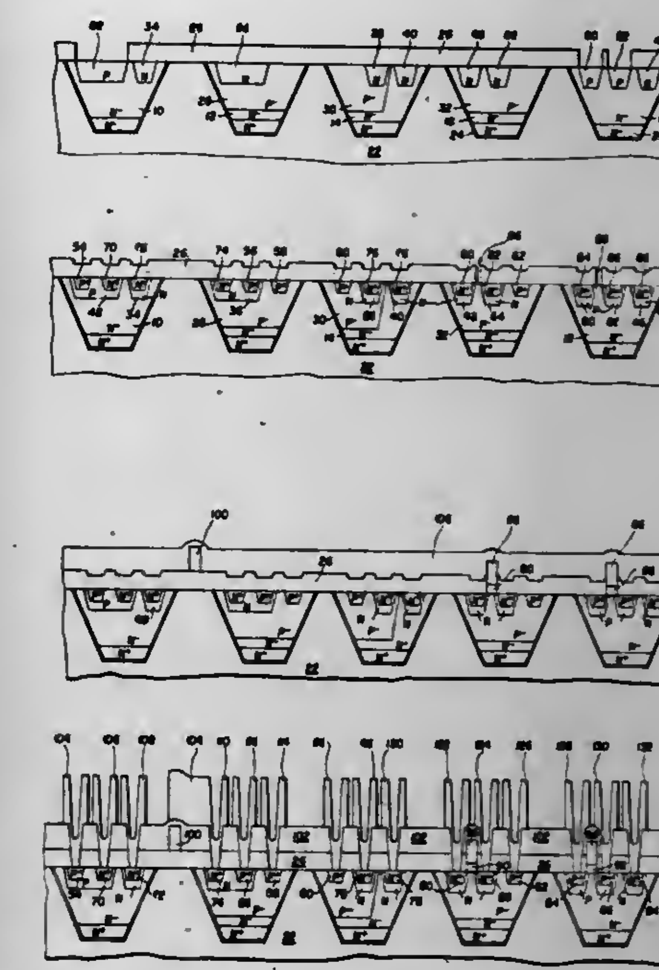

depositing and delineating a metallic layer to form second level interconnects and contacts.

4,299,025
METHODS AND APPARATUS FOR PLACING WINDINGS IN STATOR CORE SLOTS AND COIL INJECTION MACHINE TOOL PACKS
Richard E. Lauer, and Dallas F. Smith, both of Fort Wayne, Ind., assignors to General Electric Company, Fort Wayne, Ind.
Division of Ser. No. 857,222, Dec. 5, 1977, Pat. No. 4,151,636. This application Mar. 23, 1979, Ser. No. 23,351
Int. Cl.³ H02K *15/06*
U.S. Cl. 29—596 **8 Claims**

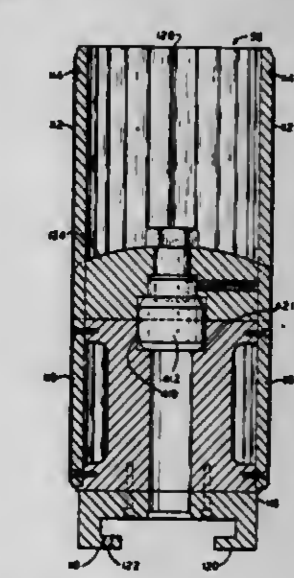

1. In a tool pack for a coil injection machine particularly adapted for the axial insertion of windings into axial slots of a stator core; said pack including a plurality of longitudinally extending elements arranged in a circular pattern and together defining a circular pattern of longitudinally extending wire turn accommodating gaps, and a base holding said elements in

assembled relation, the improvement wherein: a stripper is disposed within said elements; and a plurality of said elements are provided with pick-up recesses in the surfaces thereof adjacent the free ends thereof for interfitting engagement with a tool pack handling mechanism, whereby automatic assembly and disassembly of the tool pack with other coil injection machine parts is facilitated.

4,299,026
METHOD OF ASSEMBLING A MOTOR STARTING RELAY
Pietro De Filippis; Amedeo Salvatore; Luigi Trama, and Giuseppe Notaro, all of Naples, Italy, assignors to Texas Instruments Incorporated, Dallas, Tex.
Division of Ser. No. 960,671, Nov. 14, 1978, Pat. No. 4,241,370. This application Mar. 28, 1980, Ser. No. 135,063
Int. Cl.³ H01C *7/02*
U.S. Cl. 29—612 **1 Claim**

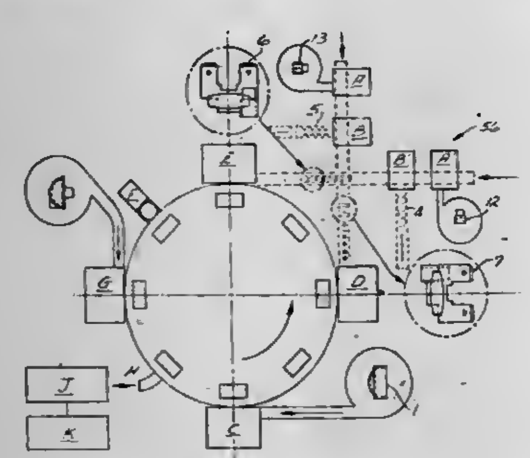

1. A method for assembling a motor starting relay comprising the steps of continuously advancing a plurality of thermally insulating open-ended housing cases in sequence relative to each other, to an assembly station, continuously advancing a plurality of terminal means and a plurality of spring means toward each other in sequence in each of two lines and securing the terminal means to respective spring means in each of the lines to form a plurality of contact means, advancing the contact means in each of said two lines to the assembly station to dispose pairs of the contact means within respective housing cases with the spring means thereof in facing relation to each other, advancing a plurality of resistor wafers of positive temperature coefficient of resistivity in sequence to the assembly station to dispose respective wafers between pairs of contact means in each of the housing cases, and advancing a plurality of housing lids in sequence to the assembly station and securing the lids to the respective housings for enclosing the resistor wafers and contact means within the housings.

4,299,027
APPARATUS FOR APPLYING REINFORCING FILM PIECES TO A PAIR OF SLIDE FASTENER STRINGERS
Keichi Yoshieda, Kurobe, and Kazuki Kuse, Toyama, both of Japan, assignors to Yoshida Kogyo, K.K., Japan
Filed Feb. 14, 1980, Ser. No. 121,317
Claims priority, application Japan, Feb. 24, 1979, 54/21234
Int. Cl.³ B23P *21/00*
U.S. Cl. 29—766 **14 Claims**

1. An apparatus for applying pieces of reinforcing film to a pair of continuous slide fastener stringers at spaced locations thereof, comprising:
(a) means for feeding the stringers longitudinally along a first path selectively at a rapid rate or a slow rate;
(b) means for sensing one of the locations on the stringers at a time to switch said feeding means from a rapid rate to a slow rate mode of operation and then to a stopping mode, and for locating said one of the locations on the stringers in a position for the application of one of the pieces of reinforcing film;
(c) means for holding the stringers during the film-piece application;
(d) means for intermittently feeding an elongate web of reinforcing film longitudinally along a second path extending transversely to said first path;
(e) means for holding a distal end of the elongate web which has passed across said first path;

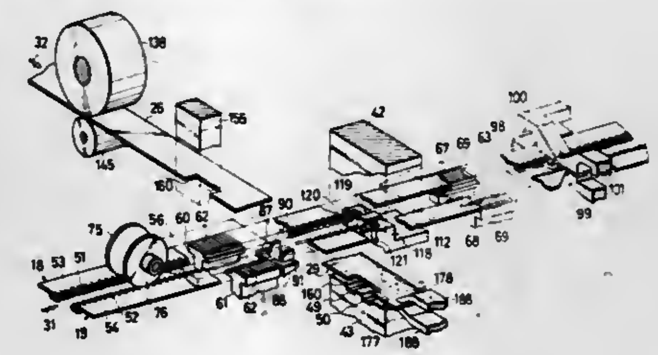

(f) means for guiding the elongate web toward said holding means;
(g) means for successively forming the pieces of reinforcing film one at a time from the elongate web; and
(h) means for applying said one of the pieces of reinforcing film to the stringers at said one of the locations thereof while the stringers are at rest.

4,299,028
METHOD FOR CONNECTING SUBSTRATES
Gilles R. Gozlan, Drancy, France, assignor to Raychem Pontoise S.A., St. Ouen l'Aumone, France
Continuation of Ser. No. 741,371, Nov. 12, 1976, abandoned. This application Mar. 7, 1979, Ser. No. 18,412
Claims priority, application United Kingdom, May 10, 1976, 19127/76
Int. Cl.³ H01R *43/04*
U.S. Cl. 29—828 **13 Claims**

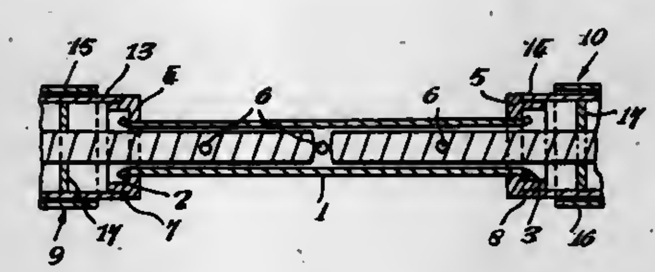

1. A method of connecting the inner conductors of two proximate, aligned first and second coaxial cables, the outer conductors and insulation of said cables having been stripped back to provide protruding lengths of their respective inner conductors, comprising the steps of:
(a) laterally displacing one of said cables relative to the other of said cables;
(b) positioning on the inner conductor of the first cable a connector sleeve having at least one spacer means mounted thereon for axial sliding movement, wherein each said spacer means is formed with an outwardly facing shoulder;
(c) sliding said sleeve onto said first cable;
(d) causing said first and second cables to assume a position in which they are in alignment;
(e) moving said connector sleeve toward and over the inner conductor of said second cable to bring said connector sleeve into bridging relationship with both conductors and causing axial relative movement between the sleeve and said spacer means;
(f) making an electrical connection between said connector sleeve and both inner conductors; and

(g) finally axially locating each said spacer means on the connector sleeve with their shoulders respectively in abutment with the outer conductor of said cables.

4,299,029
METHOD OF MAKING AN ELECTRICALLY CONDUCTIVE GAME BALL
John A. Van Auken, 16 La Gorce Cir., Miami Beach, Fla. 33141
Division of Ser. No. 683,283, May 5, 1976, abandoned, which is a continuation of Ser. No. 570,766, Apr. 23, 1975, abandoned. This application Sep. 21, 1979, Ser. No. 77,730
Int. Cl.³ A63B *61/00;* **H01R** *43/00*
U.S. Cl. 29—877 **4 Claims**

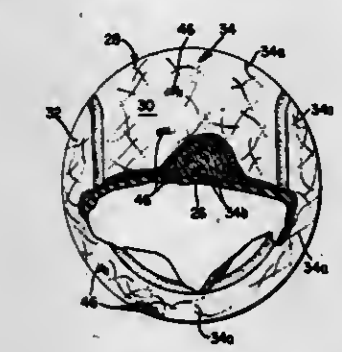

1. A method of making a tennis ball comprising the steps of providing a cloth to be employed as the cover for said tennis ball, arranging an unwoven open mesh containing a multiplicity of electrically conductive fibers on a selected side of said cloth to be employed as the inner surface of said cover, partially needle punching said mesh into said cloth to pierce said cloth with a plurality of said fibers and to leave a remainder of said mesh still containing a plurality of said fibers on said selected side of said cloth, and thereafter adhering at least a portion of the composite of said cloth and said remainder to an elastically deformable sphere to cover said sphere so that said remainder lies between the cloth and said sphere.

4,299,030
HAND-OPERATED SHEARING DEVICES
David W. Vickers, 121 Wickham Terr., Brisbane, Australia 4000
Filed Dec. 26, 1979, Ser. No. 106,456
Claims priority, application Australia, Dec. 28, 1978, PD7233
Int. Cl.³ B26B *13/00*
U.S. Cl. 30—261 **2 Claims**

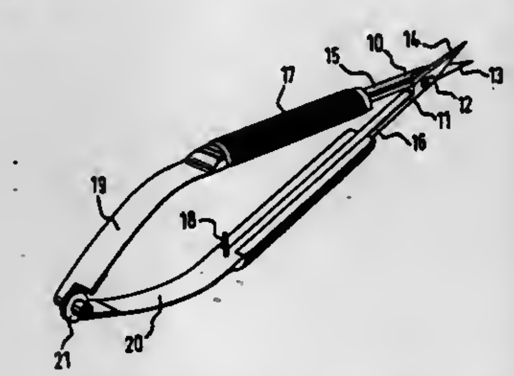

1. A hand-operated shearing device which comprises a pair of members interconnected by pivot means located between a blade-portion and a handle-portion of each member, said pivot means permitting relative rotation of said members between an open-jaw configuration and a closed configuration, and resilient lateral-urging means effective throughout the range of rotational movement of said members to urge a surface of each of said blade-portions into frictional contact with a surface of the other blade-portion;
wherein the improvement comprises a leaf-spring assembly interconnecting the ends of said handle-portions and adapted to constitute both said jaw-opening means and said lateral-urging means,
said assembly comprising a pair of leaf-springs, one end of each leaf-spring being attached to an extremity of a respective one of said handle-portions, and a screw-threaded axle interconnecting the other ends of said leaf-springs, said axle being located parallel to said axis of rotation of said members and threadably engaging at least one of said leaf-springs,
whereby upon rotation of said axle said other ends of said leaf-springs are displaced relative to one another along said axle.

4,299,031
PLOTTING DEVICE
Basil C. Collins, Ealing; Michael Bartholomew, Edgware, and Roy H. Perry, Hillingdon, all of England, assignors to Metal Box Limited, Reading, England
Filed May 23, 1979, Ser. No. 41,732
Claims priority, application United Kingdom, May 24, 1978, 22049/78
Int. Cl.³ B43L *13/00*
U.S. Cl. 33—18 R **9 Claims**

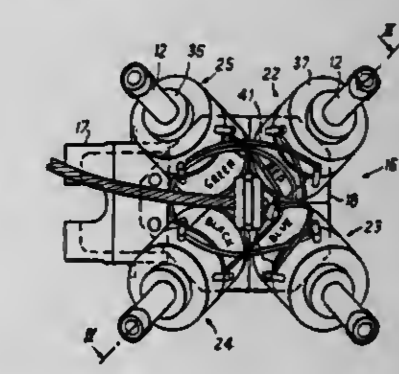

1. A multiple head for a remotely controllable plotting device, the head comprising a body, a plurality of pen carriers secured to the body, and a plurality of pens each having a tip and being carried by a respective said carrier, each pen carrier comprising: a hollow bobbin of non-magnetic material having a bore for axial movement of a pen therealong in a generally downward advancing direction and an opposite retracting direction, an electro-magnetic coil around the bobbin, a first magnetic element movable with the pen axially with respect to the bore, a second magnetic element carried by the bobbin, at least one of said magnetic elements being a magnet, whereby when the coil is energized it influences the first magnetic element to cause the pen to move in a said one of said directions depending on the sense in which the coil is energized, said first and second magnetic elements cooperating to hold the pen in a retracted position, said bore defining an axis and said axes being convergent in a single common point external to the bobbin such that when any one pen is retracted from a position in which its tip is at said common point, any other one of the pens can be advanced to a position in which its tip is at precisely the same common point without any movement of the body taking place.

4,299,032
SPECTACLES LENS-FRAME FITTING COORDINATOR
John M. Young, Sturbridge, Mass., assignor to American Optical Corporation, Southbridge, Mass.
Filed Apr. 21, 1980, Ser. No. 142,588
Int. Cl.³ G01B *5/00*
U.S. Cl. 33—174 A **10 Claims**

1. A spectacles lens-frame fitting coordinator comprising:
a base;
an ED finder chart on said base having right-angularly intersecting horizontal and vertical lines, and a multiplicity of concentric circles centered on said intersection of said horizontal and vertical lines, said circles comprising ED markings;

a pair of superimposed slides on said base, one being adjustable in a direction parallel to one of said lines on the chart and the other adjustable right-angularly in a direction parallel to the other of said lines, said chart being observable through said slides; and

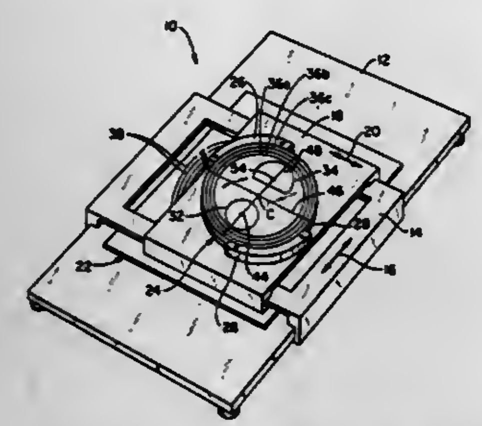

a mock lens carried by the uppermost one of said slides, said mock lens having uncut lens blank size markings and being adjustable over said chart by adjustment of said slides for reference of said lens blank size markings with said ED markings on said chart and determination therefrom of proper spectacles lens-frame fitting dimensions.

4,299,033
CALIPERING TOOL
John C. Kinley; Harry E. Dieckman, both of Houston, and Clifford E. Anderson, Huntsville, all of Tex., assignors to J. C. Kinley Company, Houston, Tex.
Filed Dec. 31, 1979, Ser. No. 108,388
Int. Cl.³ G01B *5/08*
U.S. Cl. 33—178 F **27 Claims**

1. In a calipering tool for use in a pipe and having a body and feeler means mounted with the body for engaging the surface of the pipe being calipered, the feeler means for moving in response to the variations in the surface of the pipe, the improvement residing in a chart, a plurality of active styli and at least one base-line stylus, each of said active styli adapted to engage said chart and move relative thereto in response to movements of said feeler means and said base-line stylus adapted to engage said chart in measured spaced relationship with respect to said active styli for providing a continuous base line during calipering operations for accurately determining the amount of movement of the feeler means.

4,299,034
LOG SIZER
Joseph G. DeBetta, Woodbourne, N.Y., assignor to Abbe Cormier, Danbury, Conn. and Sigmund Nokland, Mahopac, N.Y.
Filed Nov. 29, 1979, Ser. No. 98,324
Int. Cl.³ B27G *23/00*
U.S. Cl. 33—185 R **3 Claims**

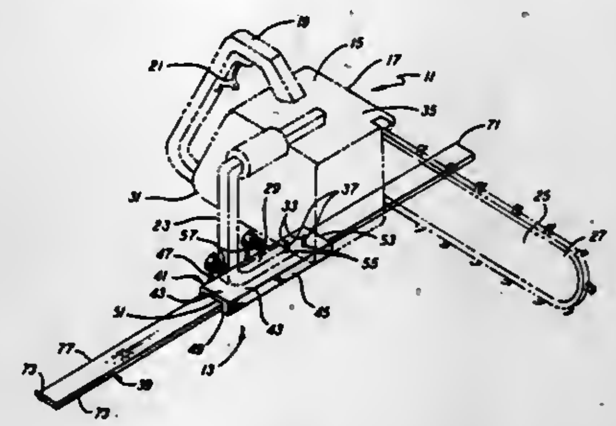

1. An attachment for a chain saw with a cutting chain and having an engine housing with a base, said attachment being used to determine accurately the length of a log being cut, said attachment comprising:

a C-shaped channel having a top surface, a forward edge, a rear edge and a pair of protrusions parallel to the top surface;

means for securing rigidly said C-shaped channel to the base of said engine housing;

a measuring bar with two opposite ends and a forward edge and a rear edge slidably mounted in said C-shaped channel, said measuring bar having a graduated scale on each edge on one surface facing away from the top surface of the C-shaped channel, one graduated scale indicating the distance from one end of the measuring bar to the center of the cutting chain of the chain saw and the other graduated scale indicating the distance from the other end of the measuring bar to the center of the cutting chain of the chain saw; and

bolt means threaded into said C-shaped channel to secure said measuring bar in a predetermined position in said C-shaped channel.

4,299,035
SPIRIT LEVEL
Siegfried Stauber, Zurich, Switzerland, assignor to Wyler AG, Switzerland
PCT No. PCT/CH79/00035, § 371 Date Nov. 1, 1979, § 102(e) Date Oct. 17, 1979, PCT Pub. No. WO79/00672, PCT Pub. Date Sep. 6, 1979.
PCT Filed Mar. 1, 1979, Ser. No. 169,118
Int. Cl.³ G01C *9/28*
U.S. Cl. 33—386 **18 Claims**

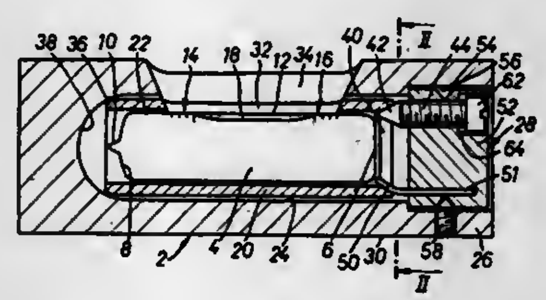

1. An improved spirit level of the type having a housing, a cylindrical level element mounted in the housing, and adjusting means having at least one set screw for finely adjusting the level element with respect to a reference surface of the housing, the level element having one side pivotally mounted to the housing, and the adjusting means being engaged on the side of the level element opposite the one side, a spring member engaged on the level element, the adjusting means having at least one set screw with a conical peripheral surface, the conical peripheral surface of the screw being convex in the longitudinal direction of the screw and engaged on the level element, and the screw adjustably engaging the level element with a force oppositely directed to the spring tension of the spring member, the spring member being engaged to the level element at a distance from the contact point of the peripheral surface of the screw, the improvement comprising the at least one set screw arranged at least approximately axially parallel to the level element and the peripheral surface of the screw, the level element having a peripheral surface with a diameter larger than the internal diameter of the level element, the spring member being engaged in the area of the peripheral surface of the level element, a common member, the set screw and the spring member being held in said common member, said common member being rotatable about an axis which is the same as the level element axis, and securing means for fixing said common element in different rotation positions.

4,299,036
OVEN WITH A MECHANISM FOR CASCADING HEATED GAS SUCCESSIVELY THROUGH SEPARATE ISOLATED CHAMBERS OF THE OVEN
Alex J. Schregenberger, Neshanic, N.J., assignor to Midland-Ross Corporation, Cleveland, Ohio
Filed Jun. 8, 1979, Ser. No. 46,796
Int. Cl.³ F26B *3/04*
U.S. Cl. 34—16 **20 Claims**

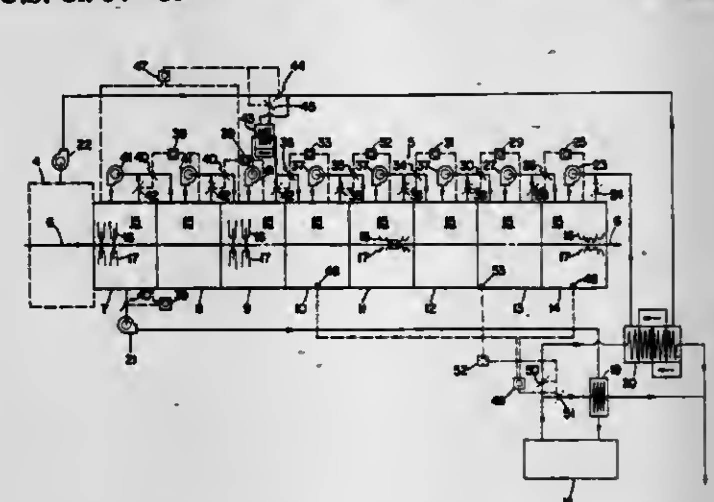

11. An oven designed to evaporate a liquid solvent carrier of a coating material at a certain rate which is correlated to the mass flow of heated gas through the oven, characterized by means for monitoring the mass flow of a mixture of gas and solvent vapor exhausted from the oven, and means for adjusting the temperature of heated gas circulated to the oven when the mass flow being monitored varies from a desired norm to return the mass flow to the desired norm.

4,299,037
BOOT APPLIANCE FOR IMPROVED TRACTION AND WEAR PROTECTION
Michael J. Carey, 4045 Third Ave., San Diego, Calif. 92103
Filed Jan. 11, 1980, Ser. No. 111,393
Int. Cl.³ A43B *3/10;* **A43C** *15/00*
U.S. Cl. 36—7.6 **11 Claims**

1. A boot appliance for attachment to a boot comprising: a toe portion formed to a shape of the boot toe and a heel portion formed to the shape of the boot heel connected to said toe portion by a resiliently stretchable middle portion formed of a flat necked member, a tread design formed of a plurality of protrusions provided at the bottom side of the toe portion and at the bottom side of the heel portion, and both said toe portion and said heel portion having a separate restraining strap, said toe restraining strap includes a toe connecting means extending upward from the forward edge of the top surface of the toe portion then bending inward at the upper edge thereof and a toe strap lip connected to the inwardly bent toe connecting means, said heel restraining strap including a heel connecting means extending upward from the rearward edge of the top

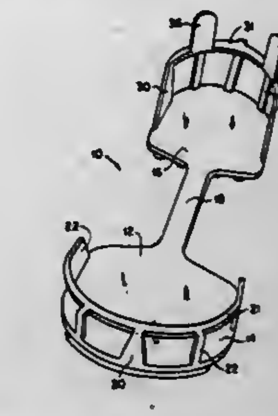

surface of the heel portion then bending inward at the upper edge thereof and a heel strap lip connected to the inwardly bent heel connecting means, said toe restraining strap and said heel restraining strap suitable for engagement with the sole of the toe and the heel, respectively, of the boot.

4,299,038
SOLE FOR ATHLETIC SHOE
Franz Epple, Hilgerloch, Fed. Rep. of Germany, assignor to BRS, Inc., Beaverton, Oreg.
Filed Nov. 21, 1979, Ser. No. 96,304
Claims priority, application Fed. Rep. of Germany, Nov. 29, 1978, 2851571
Int. Cl.³ A43C *15/00*
U.S. Cl. 36—67 D **34 Claims**

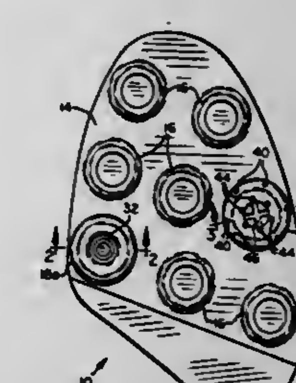

1. A sole for an athletic shoe comprising:

a sole plate having a major exterior surface and a plurality of projections, each projection having a wall extending outward from the major exterior surface to define a plurality of cavities, each of said projections including a threaded interior wall which at least partially defines the respective cavity, a major portion of said threaded interior wall extending outward of said major exterior surface of said sole plate, each projection further including a raised exterior surface extending from the major exterior surface to a peripheral rim of the respective cavity; and

a plurality of contoured insert elements for insertion into the cavities of selected ones of said projections, each insert element having a threaded wall with a threaded outwardly facing surface cooperatively constructed to mate with the threaded interior wall of the projections to permit each insert element to be threadedly secured within the cavity of a selected projection with a major portion of said threaded outwardly facing surface disposed outward of said major exterior surface of said sole plate, each insert element having an outer wall extending from its respective threaded wall to overlap and at least partially cover the

raised exterior surface of the selected projection when the insert element is secured within the respective cavity.

4,299,039
FOOTWEAR HAVING HEEL WIDTH ADJUSTMENT
Chris A. Hanson, Boulder, Colo., assignor to Hanson Industries Incorporated, Boulder, Colo.
Filed Mar. 13, 1980, Ser. No. 130,195
Int. Cl.³ A43B *3/26, 5/04*
U.S. Cl. 36—97 **4 Claims**

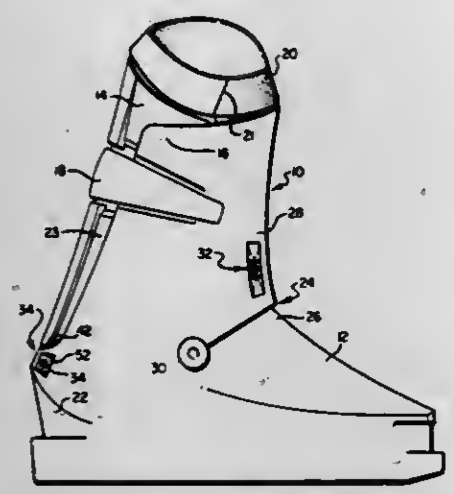

1. In a substantially rigid plastic boot shell having a split rear section opening for foot entry and at least one closure means across said opening adapted for closing the shell about a wearer's foot, the improvement of means for adjustably setting the boot heel portion to the wearer's heel width size, said improvement comprising:
a longitudinal slit commencing in said boot heel portion and extending upwardly to communicate with said split rear section opening;
adjustable fastening means mounted in said boot heel portion on both sides of said slit, including a threaded screw extending across said longitudinal slit and positionable for varying the width of said slit and setting the boot heel portion to conform to the wearer's heel width size,
said adjustable fastening means permitting entry and exit of said foot from said boot shell through release of said closure means without repositioning said threaded screw.

4,299,040
FASTENING MEANS
Arthur J. Minasy, Woodbury, N.Y., assignor to Knogo Corporation, Hicksville, N.Y.
Filed Sep. 30, 1975, Ser. No. 618,254
Int. Cl.³ G09F *3/08;* **A44B** *1/18*
U.S. Cl. 40—20 R **4 Claims**

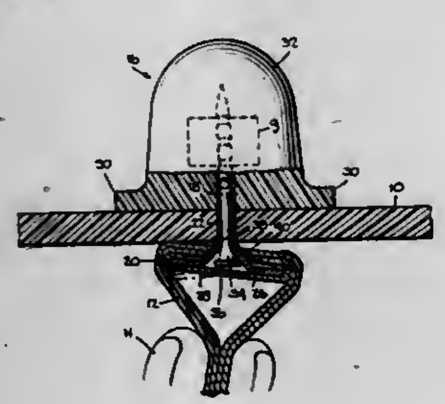

1. A tamper resistant, nonseparable tack fastener assembly comprising a thin wafer positioned against a sheet shaped portion of an article of merchandise, a tack-like fastener element having an expansive head and a thin elongated shank said shank extending through said article of merchandise and said wafer, and a thick button element having an opening for closely accommodating said shank and pressing said article and said wafer tightly between itself and said expansive head of said tack-like fastener element and including means for solidly interlocking said button and fastener element together; means connecting said shank and said head to permit the latter freely to tilt with respect to the longitudinal axis of said shank.

4,299,041
ANIMATED DEVICE
Stephen H. Wilson, 2008 N. Seminary, Chicago, Ill. 60614
Filed Sep. 20, 1979, Ser. No. 77,334
Int. Cl.³ G09F *1/00, 13/00*
U.S. Cl. 40—124.1 **5 Claims**

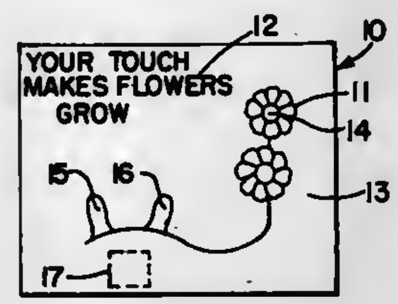

1. An animated greeting card comprising a panel member having pictorial and/or word matter on one face, a solid state electronic circuit mounted on said member but not visible from said one face, an effects generator associated with said pictorial and/or word matter and connected into said electronic circuit, said effects generator being used for producing light and/or sound, and means for triggering the electronic circuit to drive the effects generator and produce animation for the pictorial and/or word matter, said means operable by the person receiving the card and integrated with the pictorial and/or word matter, said means including a pair of contact members mounted on said one face and interconnected with said circuit such that engagement of both said contact members by a person closes said circuit.

4,299,042
FRAME CONSTRUCTION FOR A PROJECTING ILLUMINATED SIGN BOX
Paul Rasmussen, Varde, Denmark, assignor to Colorlux a-s, Esbjerg, Denmark
Filed Dec. 19, 1979, Ser. No. 105,763
Claims priority, application Denmark, Dec. 27, 1978, 5831/78
Int. Cl.³ G09F *13/04*
U.S. Cl. 40—571 **1 Claim**

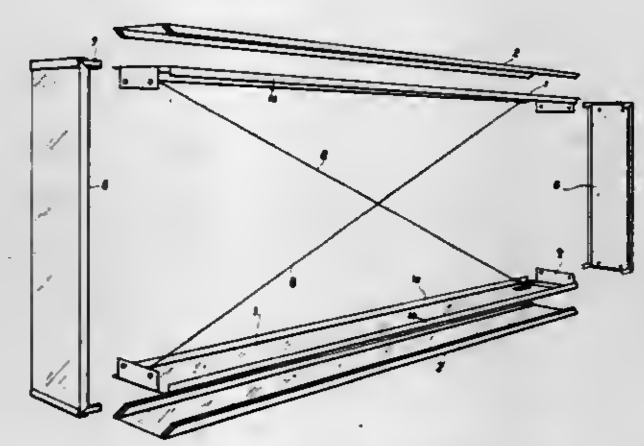

1. In a frame construction for an illuminated sign box of the type having a top planar frame member having downwardly extending longitudinal flanges, a bottom planar frame member having upwardly extending longitudinal flanges, and end frame members detachably secured to end flanges of said top and bottom frame members to provide a substantially rigid rectangular frame, the improvement comprising:
a sheathing of metal sheeting on the outwardly presented faces of said top and bottom frame members, said sheathing having first longitudinally extending flange portions which extend substantially parallel to outwardly presented faces of said frame member flanges and in spaced relationship thereto, second longitudinally extending flange portions integral with said first flange portions and which extend across the longitudinal edges of said frame member flanges, third longitudinally extending flange portions integral with said second longitudinally extending flange portions and which extend parallel to and in face contact with inwardly presented faces of said frame member flanges, fourth longitudinally extending flange portions integral with said third longitudinally extending flange portions and which extend parallel to and in face contact with inwardly presented faces of said top and bottom frame members, and fifth longitudinally extending flange portions integral with said fourth longitudinally extending flange portions and which extend in parallel spaced relationship with said third longitudinally extending flange portions and which define channels for the reception and support of front and rear panels of said sign box.

4,299,043
SIGNAGE SYSTEM
Dan H. Lathrop, P.O. Box 821, Silverdale, Wash. 98383, and Hendrick W. Haynes, P.O. Box 66152, Seattle, Wash. 98166
Filed Jan. 17, 1980, Ser. No. 114,106
Int. Cl.³ G09F *15/00*
U.S. Cl. 40—624 **9 Claims**

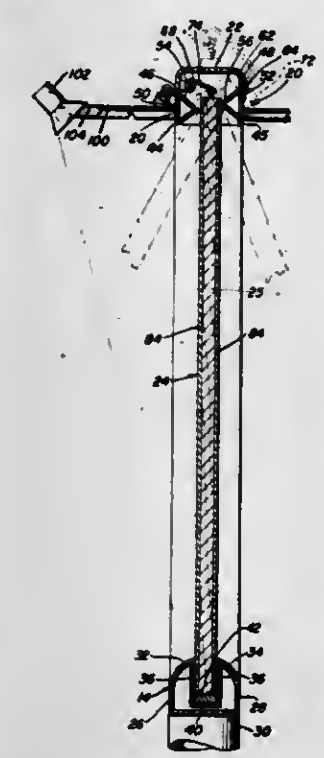

1. A sign system utilizing removable signs for displaying advertising and other indicia, said system comprising:
at least one removable sign on which said advertising and said other indicia may be selectively positioned; and
frame support means for facilitating a supporting of said at least one removable sign in a displaying manner, said frame support means including top support means and bottom support means cooperatively operable to support said at least one removable sign in said displaying manner, said top support means including first and second horizontally extending support braces, said first and second horizontally extending support braces being respectively positioned proximate to opposite side surfaces of said at least one removable sign and each being engageable with said at least one removable sign along a surface of contact defined by a line, such respective surface contact lines each being created by respective pairs of surfaces defined by non-parallely aligned planes on said respective first and second support braces, said respective surface contact lines associated with said first and second support braces being substantially parallelly aligned and being vertically displaced from one another so as to define an angular opening therebetween which facilitates a movement of said at least one removable sign into an interior portion of said top support means when said at least one sign is angulated so as to substantially move a first plane defined by its indicia display surface towards an orthogonal relationship with a second plane having said respective surface contact lines substantially contained therein.

4,299,044
TELESCOPIC SIGHT MOUNT FOR FIREARMS
Donald R. Johannsen, Dearborn Heights, Mich., assignor to Wideview Scope Mount Corporation, Inkster, Mich.
Filed Sep. 17, 1979, Ser. No. 76,481
Int. Cl.³ F41G *1/38*
U.S. Cl. 42—1 ST **1 Claim**

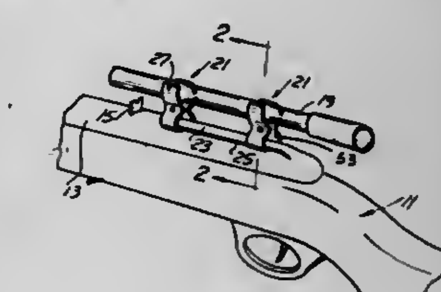

1. In combination with a firearm having a barrel with a longitudinal axis and front and rear sights thereon;
a telescopic sight of one diameter parallel to said axis and spaced above said sights;
an elongated land upon the barrel spaced rearwardly of said sights having undercut opposed outwardly opening elongated V-grooves therein parallel to and outward of said axis;
and a pair of longitudinally spaced telescopic sight mounts retainingly engaging said telescopic sight and adjustably secured to said land;
each telescopic sight mount including a pair of opposed symmetrical scope brackets;
each bracket comprising an arcuate top wall with a tapered longitudinal edge and with an internal semi-circular face of a first radius;
an arcuate bottom wall with a tapered longitudinal edge and an internal semi-circular face of a second radius;
and an intermediate central apertured abutment integrally connected to said top and bottom walls;
opposed pairs of arcuate top walls receiving therebetween opposed sides of the telescopic sight, and opposed pairs of arcuate bottom walls being arranged upon opposite sides of said land with their corresponding tapered longitudinal edges retainingly projected into the land grooves respectively, said abutments being spaced apart;
and a single fastener nested within one abutment and adjustably threaded into the opposing abutment whereby tightening of the fastener secures the telescopic sight between said top walls and secures the adjacent pair of bottom walls of said land with said land retainingly engaging the edges of the bottom walls;
said bracket being reversible end-to-end on loosening of said fastener, whereby the arcuate bottom walls are adapted to retainingly receive selectively a telescopic sight of a second diameter, with the corresponding tapered edges of said top walls extending into the grooves of said land and secured therein on tightening of said fasteners, the opposed walls of the bracket engaging said land defining an opening in alignment with said front and rear sights.

4,299,045
BACKPLATE FOR A DETACHABLE GUN LOCK
Ramon H. Cervantes, 4600 78th St., Sacramento, Calif. 95820
Filed Jul. 20, 1979, Ser. No. 59,181
Int. Cl.³ F41C *27/10*
U.S. Cl. 42—1 Y **9 Claims**

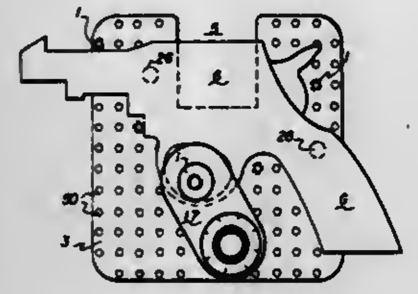

1. An improvement for a detachable gun lock which includes a backing plate, a stem portion extending from said back plate caused to enter within a trigger guard of a hand gun, and a bolt connecting said stem portion to a lock, the improvement comprising means on said backing plate to prevent the gun from rotating about said stem which extends into the trigger guard in which said means to prevent rotation includes a plurality of pin elements extending through said backing plate and affixed thereto, in which at least one of said pins is disposed behind a hammer of the hand gun.

4,299,046
SINGLE-SHOT SURVIVAL RIFLE
Maxwell G. Atchisson, 6695 Ridgemoore Dr., Doraville, Ga. 30360
Filed Feb. 14, 1979, Ser. No. 11,781
Int. Cl.³ F41C *7/10*
U.S. Cl. 42—75 D **30 Claims**

1. Firearm apparatus which can assume either an assembled condition for loading and firing or a disassembled condition, comprising:
means comprising a barrel assembly;
means comprising a stock assembly;
means defining a hinge interconnection between said barrel assembly and said stock assembly, said hinge interconnection permitting relative movement of said assemblies between a closed position for firing, an open position for loading, and a takedown position which disconnects the two assemblies;
takedown catch means operatively associated with said barrel and stock assemblies and normally preventing movement of said assemblies to said takedown position, said takedown catch means being selectably operative to permit movement to said takedown position whereby the firearm apparatus are disassembled by disconnecting said two assemblies;
said barrel assembly comprising a barrel having a chamber end, and also comprising means at said chamber end defining the confronting sides of a receptacle which forms a portion of said hinge interconnection;
means at said chamber end defining an arc surface having a center point in said receptacle;
means in said receptacle to define a hinge pin at said center point;
means associated with said stock assembly defining a member which fits in said chamber end;
said member having means which pivotally receives said hinge pin;
said member having an arc surface which mates with said arc surface of said chamber end so as to retain said member in predetermined location between said chamber end and said hinge pin;
said hinge pin receiving means comprising a slot formed in said member in a plane perpendicular to the member;
said slot having a closed end comprising said hinge pin receiving means, and having an open end to receive said hinge pin;
said slot being located on said member to permit said hinge pin to move along said slot to said open end only when said barrel and stock assemblies are moved to said takedown position, whereat said arc surface of said member moves clear of said arc surface of said chamber end to allow separation of said assemblies;
extractor means carried by said member of said stock assembly and operative to engage and extract a cartridge from said chamber end of said barrel as said assemblies are moved from said closed position toward said open position; and
means operative to withdraw said extractor means from said cartridge engagement in response to a predetermined extent of said movement toward said open position.

4,299,047
COLLAPSIBLE SHRIMP TRAWL
Bragelin J. Collins, 507 Bilbo St., Delcambre, La. 70528
Filed Aug. 15, 1980, Ser. No. 178,580
Int. Cl.³ A01K *73/02*
U.S. Cl. 43—9 **9 Claims**

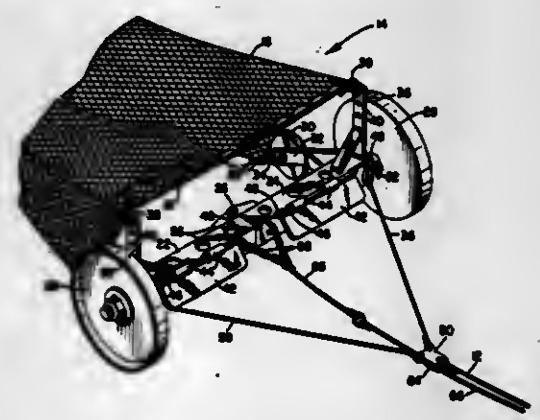

1. A collapsible beam trawl comprising: a transverse beam, bifurcated into two sections of approximately equal dimensions; hinge means interconnecting said two sections together; and towline means for towing said trawl through the water from a vessel and being operable from said towing vessel for selectively opening and closing said beam trawl by pivoting said beam sections away from and towards each other, respectively, said towline means comprising a towline branched into a bridle, the distal ends of said bridle being attached one to each beam section, and a liveline paralleling said towline and being attached to said beam whereupon pull on one of said towline or liveline and simultaneous slack on the other of said towline or liveline, said beam sections are caused to rotate about said hinge means to thereby effect opening and closing of said beam trawl.

4,299,048
PEST BIRD CONTROL
James W. Bayes, P.O. Box 531, 614 Metzler Ave., Molalla, Oreg. 97038
Filed May 19, 1980, Ser. No. 150,981
Int. Cl.³ A01M *19/00*
U.S. Cl. 43—98 **3 Claims**

1. An improved pest bird control device, comprising, in combination, an overhead cable, spaced-apart positive and negative electrodes along said cable connected to a switch and

a power source, and automatic warning means when a large number of pest birds have alighted upon said cable.

4,299,049
SHAPE-SIMULATING TOY
Gary W. Pimentel, Fountain Valley; Jeffrey B. Poznick, La Crecenta, and Robert W. Atwood, Whittier, all of Calif., assignors to Mattel, Inc., Hawthorne, Calif.
Filed Feb. 11, 1980, Ser. No. 120,249
Int. Cl.³ A63H *33/28*
U.S. Cl. 46—8 **3 Claims**

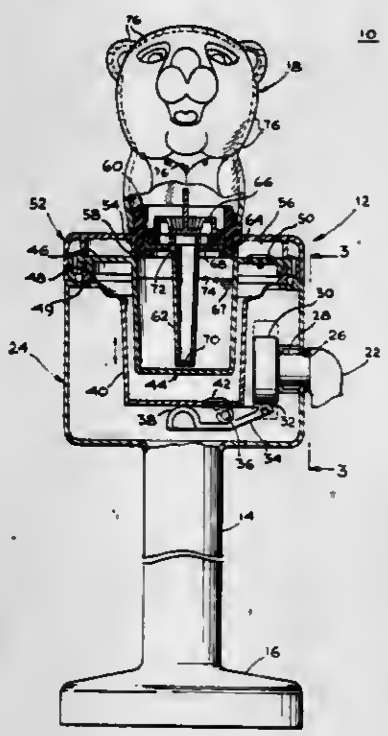

1. A toy comprising a bubble generator; and means for shaping bubbles generated by the bubble generator into recognizable forms, the bubble generator including:
a pump having a first generally-cylindrical cup, a second cup located within the first cup, means for mounting the first and second cups to form a hermetically sealed volume therebetween and to allow movement of the first cup along its cylindrical axis relative to the second cup, a first check valve in the first cup positioned to open as the two cups recede from one another, and a second check valve communicating with the hermetically sealed volume and positioned to open as the two cups approach one another,
means for actuating the pump including means for causing the two cups to approach and recede from one another,
means for moving a fluid which may be formed into bubbles in response to the action of the pump, and
means for injecting a gas into the fluid.

4,299,050
CONSTRUCTION TOY AND CONTAINER
Eric P. P. Chan, 506 E. 82nd St., Apt. #13, New York, N.Y. 10028
Filed Feb. 13, 1980, Ser. No. 121,150
Int. Cl.³ A63H *33/00*
U.S. Cl. 46—11 **7 Claims**

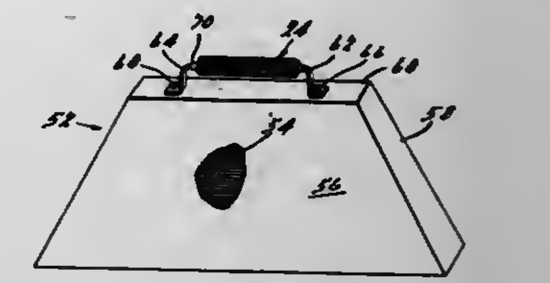

1. A construction toy comprising:
(a) a plurality of rods; and
(b) a plurality of linking rings, each of said rings being shaped generally like a flat washer and having a centrally disposed aperture therethrough and comprising a resilient bendable material adapted to exert compressive forces against two or more of said rods to link said two or more of said rods in joined relationship to each other;
(c) a trapezoidal enclosure within which said plurality of rods are constrained; and
(d) a handle element attached to said enclosure, said plurality of rings being coaxially positioned over said handle element.

4,299,051
MOUNTABLE WHEEL FOR TOY VEHICLE
Ronald R. Pauly, Mound; Thomas W. Good, Long Lake, and John D. Hastings, Eden Prairie, all of Minn., assignors to Tonka Corporation, Spring Park, Minn.
Filed Sep. 9, 1977, Ser. No. 831,858
Int. Cl.³ A63H *17/26*
U.S. Cl. 46—221 **11 Claims**

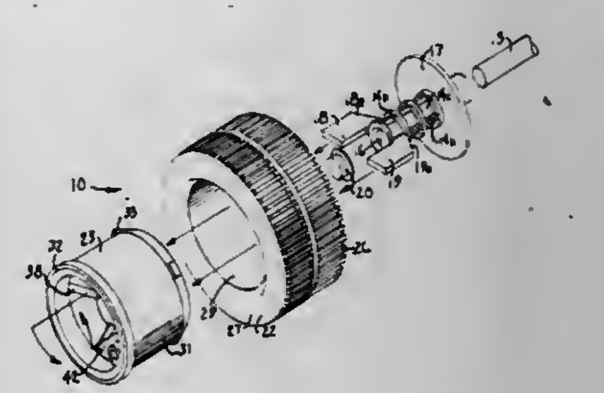

1. An easily mountable and demountable wheel suitable for use on toy vehicles, said wheel comprising:
a. first wheel means including rotatable support means adapted for at least semi-permanent mounting on an axle, spring means comprising a resilient disc-like portion integral with said support means, and first quick release twist locking means, said first locking means comprising a pair of oppositely extending flange means, said flange means being integral with said support means; and
b. second wheel means releasably mounted on said first wheel means including tire means and second quick-release locking means for engagement with said first locking means, said second wheel means including hub means, said tire means being mounted on said hub means in semi-permanent locking engagement, entrapped between said resilient portion and said oppositely extending flange means, said flange means being movable between a locking position and a non-locking position with respect to

said second wheel means and said hub means being easily removably mounted on said support means.

4,299,052
TREE ANCHORING DEVICE
Arnold P. Staudt, Box 57, Marble Rock, Iowa 50653
Filed Jan. 28, 1980, Ser. No. 116,040
Int. Cl.[3] A01G *17/06*
U.S. Cl. 47—43 6 Claims

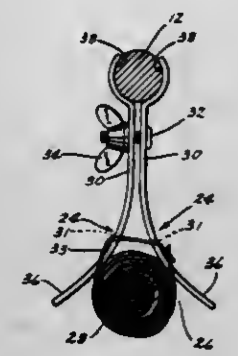

1. A tree anchoring device comprising,
an upright elongated support rod having upper and lower ends,
a plurality of circumferentially spaced apart and generally radially directed foot members connected to the lower end of said support rod,
each foot member including a first prong connected to said support rod and extended generally perpendicularly therefrom, and a second prong extended generally perpendicularly from an outer end of the first prong and generally parallel to said support rod for insertion into the ground, and
a pair of diverging contact fingers extended outwardly from said support rod at a position intermediate the upper and lower ends thereof for contacting a tree and supporting said tree in spaced relation from said support rod
said pair of contact fingers diverging outwardly and laterally from said support rod to define an open-sided generally V-shaped channel in which said tree is received,
said diverging fingers including rod engaging end portions opposite said diverging ends, said fingers having interior surfaces including generally parallel central portions, generally convex diverging end portions, and generally concave rod engaging end portions; and
fastening means urging said pair of contact fingers together so as to secure said contact fingers in clamping relation onto said support rod;
flexible tying means operatively connected to said diverging fingers, said tying means adapted to extend around the trunk of said tree for fixedly associating the tree anchoring device to the tree.

4,299,053
COMBINATION CONNECTOR
Hilton Foote, R.D. #2, Cornwall Cider Mill Rd., Middlebury, Vt. 05753
Filed Dec. 4, 1980, Ser. No. 212,817
Int. Cl.[3] A01G *23/14*
U.S. Cl. 47—52 7 Claims

1. A combination connector and plug for use in a sap collecting system in which plastic tubing is connected to a spout having an open end inserted in a borehole in the trunk of a tree, comprising a member having an axial passageway for transporting sap between a fist fitting for connecting first plastic tubing to said member and second fitting for connecting second plastic tubing to said member, and a projection extending from said member and dimensioned to fit in sealing engage-

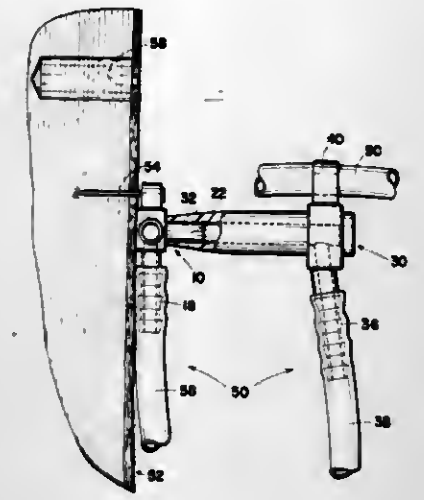

ment in the end of the spout when the spout is removed from the borehole.

4,299,054
HYDROPONIC ASSEMBLY AND WAFER FOR USE THEREIN
R. Louis Ware, 1739 Chestnut Ave., Glenview, Ill. 60025
Filed Jul. 20, 1979, Ser. No. 59,140
Int. Cl.[3] A01G *31/00*
U.S. Cl. 47—64 17 Claims

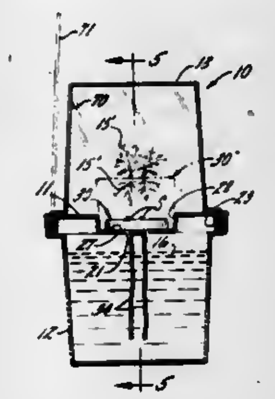

1. A hydroponic assembly comprising a tray of planar material having a plurality of growing stations spaced one from another to permit circulation of air thereabout, the respective growing stations each having through-openings surrounded by a land surface and a vertical surface rising therefrom to at least the height of the tray surface, a trough for supporting the tray and for containing a body of nutrient solution disposed beneath the growing stations, a wafer of dry compressed growing medium supported on the land surface at each growing station, a seed-receiving surface disposed on a top side of said wafer, a wick communicating with the wafer and extending downwardly into the nutrient solution, the wafer upon receiving nutrient solution through the wick by capillary action being capable of expanding three-dimensionally into a porous block having a height substantially greater than said vertical surface of said growing station and having a homogeneous composition that permits outward spreading of root structure, the height of the block being effective to provide vertically extending lateral area so that the contained root structure will receive constant aeration.

4,299,055
PLANT CONTAINER
Ted Dziewulski, Rosemont, and Arthur H. Kay, Schaumburg, both of Ill., assignors to Phillips Petroleum Company, Bartlesville, Okla.
Filed Mar. 11, 1980, Ser. No. 129,436
Int. Cl.[3] A01G *9/02*
U.S. Cl. 47—66 15 Claims

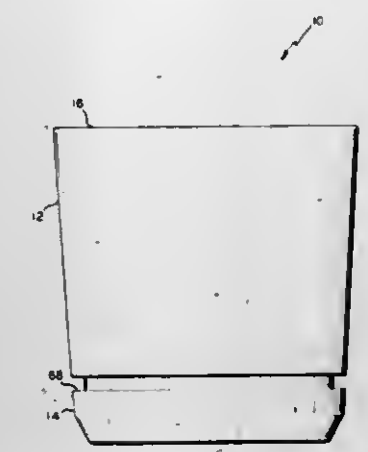

1. A container for plants or the like, comprising:
a tray having a generally flat horizontal bottom portion with an outer margin, at least one rib upstanding from the bottom portion and a continuous wall upstanding from the outer margin of the bottom portion; a plurality of first protuberances extending upwardly from the bottom portion of said tray, each first protuberance having a generally horizontally extending notch in one side of the first protuberance; a plurality of second protuberances extending upwardly from the bottom portion of said tray, each second protuberance having a generally horizontally extending upwardly opening notch in the top portion of the second protuberance; and
a pot having a generally flat horizontal bottom portion with an outer margin and a continuous wall upstanding from the outer margin; a plurality of pairs of apertures extending through the bottom portion of said pot, a pair of apertures being positioned in vertical registration with each one of the first and second protuberances of said tray, and each pair of apertures being separated by horizontal locking bar means sized and shaped to be optionally received in the notch of a corresponding first or second protuberances in vertical registration therewith for releasably securing said tray to said pot.

4,299,056
SELF-WATERING PLANT GROWING BAG
Dennis J. Towning, 8 Colborne St., Suite 401, Toronto, Ontario, Canada M5E 1E1
Filed Mar. 7, 1980, Ser. No. 128,284
Int. Cl.[3] A01G *25/00, 27/00*
U.S. Cl. 47—81 4 Claims

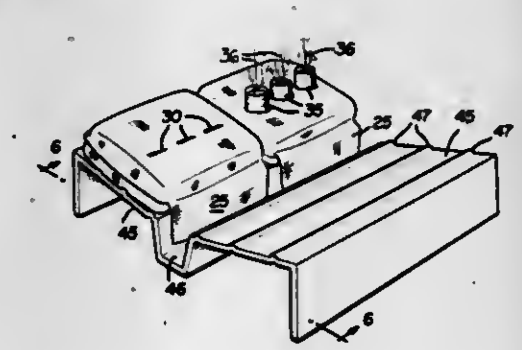

1. A self-watering plant growing bag comprising:
a generally flattened, normally horizontally arranged, closed sack-like bag formed of thin, flexible sheet material arranged to provide a generally flat and horizontally arranged upper, plant growing surface portion and a lower, liquid feed surface portion, and with the bag having elongated, horizontally arranged, opposite side and end edge portions;
a mass of plant growing filler material, such as peat moss, soil-like compositions and the like, filling the bag;
the bag lower, liquid feed surface portion being formed of an originally flat, sheet of capillary-type wicking material, and the upper, plant growing surface portion of the bag being formed of a separate sheet which is smaller than the lower sheet and whose edges are secured to the lower sheet so that a relatively wide edge portion of the lower sheet is free of and uncovered by the upper sheet, and opposing edges of said upper sheet being located considerably inwardly of opposing edges of the lower sheet so as to provide enlarged loose flaps, integral with the lower sheet, on opposing edges thereof;
and said flaps loosely extending downwardly from the bag edges and adapted for having their lower portions immersed in a liquid, such as water, water-fertilizer mixtures and the like;
whereby the roots of plants may be grown within the bag filler material, with the plants extending upwardly from the upper plant growing surface of the bag, and liquid continuously flows through capillary action up the flaps and substantially uniformly spreads out by capillary action, throughout the sheet material forming the lower liquid feed surface of the bag for dispersing the liquid into the filler portions adjacent thereto, and thereby, close to the plant roots for self-watering the plants.

4,299,057
WINDOW OPERATING ASSEMBLY
Edmund Hagemann, Wolfsburg, and Herbert Wildschütte, Brunswick, both of Fed. Rep. of Germany, assignors to Volkswagenwerk AG, Wolfsburg, Fed. Rep. of Germany
Filed Nov. 14, 1979, Ser. No. 94,349
Claims priority, application Fed. Rep. of Germany, Nov. 15, 1978, 2849497
Int. Cl.[3] E05F *11/38*
U.S. Cl. 49—375 9 Claims

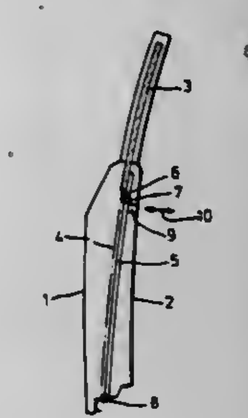

1. In a window operating assembly for raising and lowering a window pane mounted in a wall structure; said assembly including mounting means; a guide rail secured to the wall structure by said mounting means; said guide rail assuming, in a secured, operative state, an orientation substantially parallel to the direction of motion of the window pane during a raising and lowering thereof; a sled mounted on the guide rail for back-and-forth travel thereon; connecting means for securing the sled to the window pane; and a drive cable attached to the sled for moving the sled on the guide rail; the improvement wherein said mounting means comprises
(a) a plug-and-socket joint held in said wall structure and supporting a lower end of said guide rail; said plug-and-socket joint including first means for allowing said guide rail, in said secured, operative state thereof, to perform a pivotal motion in a direction substantially perpendicular

to the plane of the window pane about a pivot point defined by said plug-and-socket joint; and

(b) a support engaging said guide rail at a location thereof spaced from said lower end; said support including second means allowing said guide rail, in said secured, operative state thereof, to perform a freely sliding motion relative to said support in a direction substantially perpendicular to the plane of the window pane.

4,299,058
DOOR CLOSURE
Floyd A. Spaulding, 2001 Country Club Rd., Mooresville, Ind. 46158
Filed Oct. 9, 1979, Ser. No. 83,217
Int. Cl.³ E05F *1/10*
U.S. Cl. 49—386 11 Claims

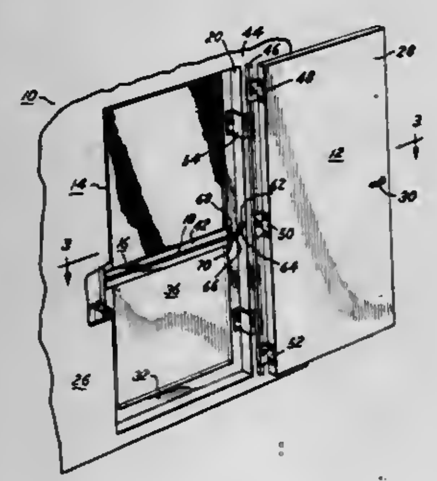

1. A closure for an outwardly swinging door having a frame and a hinge with its pivot point spaced outwardly from the door, said closure comprising a retraction means of flexible material for pulling the door closed from an open position, an attachment means for securing one end of said retraction means to the side of the door forming the leading face when the door is opened, a mounting means for securing the other end of said retraction means to the door frame between the door and the pivot point of the hinge at a point where substantially the entire length of said retraction means is generally parallel to the leading face of the door when the door is in the closed position, and a bracket disposed over said retraction means between said attachment means and said mounting means and permitting said retraction means to slide therethrough but retaining said retraction means near the door throughout the movement of the door between opened and closed positions.

4,299,059
THERMALLY INSULATED, FIRE RESISTANT ATTIC DOOR
William V. Smith, Columbus, Ohio, assignor to Cardinal Industries, Inc., Columbus, Ohio
Filed Mar. 10, 1980, Ser. No. 128,520
Int. Cl.³ E05D *7/00*
U.S. Cl. 49—401 2 Claims

1. A flame-resistant, thermally insulated trap door for hinged mounting in a ceiling opening and comprising:

(a) a generally rectangular supporting frame;

(b) at least one layer of incombustible, thermal insulating material carried within and closing said frame;

(c) an outer facing panel of flame-resistant plaster board connected to one face of said frame in coextensive, covering relation to said frame and to said layer of thermal insulating material; and

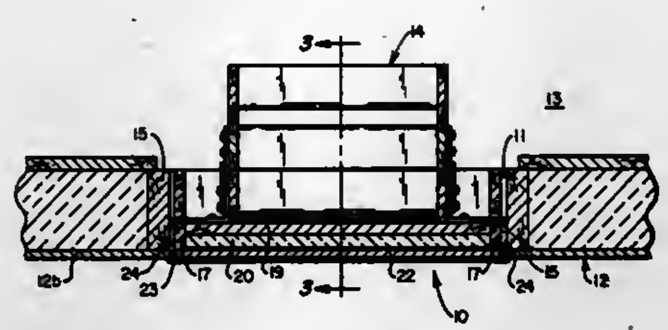

(d) a strip of flexible thermal insulating material positioned around the outer marginal edges of said frame for sealing engagement with the walls defining said ceiling opening.

4,299,060
INSULATED DOOR AND WINDOW CONSTRUCTION
Eugene R. Tippmann, 10120 Isle Pine Dr., Fort Wayne, Ind. 46815
Filed Aug. 24, 1979, Ser. No. 69,317
Int. Cl.³ E06B *3/00*
U.S. Cl. 49—501 5 Claims

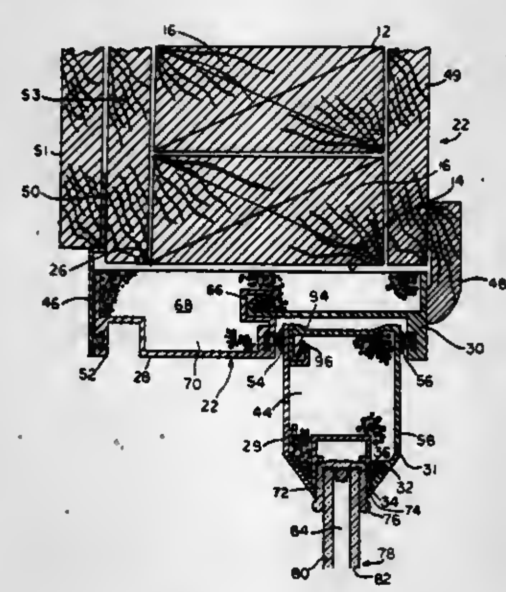

1. In a door or window construction for an opening in a building wall having an exterior and interior surface, said construction comprising:

(a) an insulated frame conforming with the outline of the surface of said opening, said frame having a metallic member extending from said exterior surface of said wall to a point intermediate said wall opening and terminating in a connection element along the longitudinally extending edge thereof, a plastic member extending from said interior surface of said wall to said metallic member, said plastic member terminating in a connection element along the longitudinally extending edge thereof which is in direct interlocking relationship with said connection element on said metallic member, said metallic and plastic members forming a cavity when so interlocked, and a polyurethane foamed core disposed within said cavity to form a moisture and thermal barrier between said metallic and said plastic members and said surface of said wall opening, and

(b) a movable inner sash operatively associated with said frame comprising peripheral members each including an outer metallic member having connecting elements on the opposing longitudinally extending edges thereof, an inner plastic member having connecting elements on the opposing longitudinally extending edges thereof which when mated with said connecting elements on said metallic member form a continuous thermal interlock between said plastic and metallic members, said metallic and plastic members forming hollow members when so interlocked, and a polyurethane foamed core disposed within said hollow members to form a moisture and thermal barrier between said metallic and said plastic members.

4,299,061
CAM MACHINE WITH ACCELERATION CONTROL
John D. Parnum, Peterborough, and Nigel T. Barber, Rugby, both of England, assignors to The Newall Co., Ltd., Peterborough, England
Continuation of Ser. No. 926,384, Jul. 20, 1978, abandoned. This application May 9, 1980, Ser. No. 148,569
Claims priority, application United Kingdom, Jul. 26, 1977, 31406/77
Int. Cl.³ B24B *17/06*
U.S. Cl. 51—101 R 13 Claims

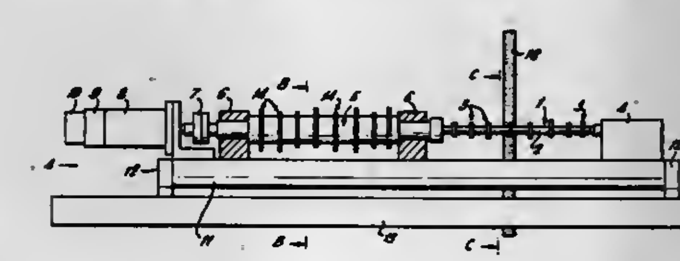

1. Apparatus for machining cam profiles, comprising, mounting means for rotatably holding a workpiece while the cam profile is being machined thereon, drive means for rotating the workpiece held by said mounting means, a machine tool for removing stock from a portion of a workpiece held by said mounting means, profile control means for providing relative movement between the machine tool and the mounting means laterally of the axis of rotation of said workpiece during the removal of stock from said workpiece portion so that a predetermined cam profile is machined thereon, speed control means including a programmable memory for storing a speed programme relating the angular displacement from a datum of a workpiece to the rotational speed required for a subsidiary constant stock removal rate for said predetermined cam profile, means for monitoring said instantaneous angular displacement of the workpiece and for referring to the memory of each time a change in the rotation of speed of the workpiece is required by said speed programme for data relating to the new rotational speed, a speed counter of which the output is connected to the drive means via a digital-to-analogue converter, for storing a speed count indicative of the required instantaneous rotational speed of the workpiece, means for determining the difference between the content of the speed counter and a new speed count indicative of a new rotational speed when a change of rotational speed is dictated by said speed programme and for altering the content of the speed counter to equal the new speed count, wherein the improvement comprises the provision of acceleration control means which are connected to the input of said speed counter to control the rate at which its contents are altered to equal the new speed count and hence the rate at which the rotational speed of the workpiece is changed, said acceleration control means being arranged to receive and store acceleration data relating to the current rotational speed change, derived from said new rotational speed data each time the content of said speed count is altered to equal a new speed count.

4,299,062
DEVICE FOR THE PRODUCTION OF GEAR WHEELS
Erwin Junker, 78 Talstrasse, 7611 Nordrach-Baden, Fed. Rep. of Germany
Filed Nov. 30, 1978, Ser. No. 965,706
Claims priority, application Fed. Rep. of Germany, Nov. 30, 1977, 2753469
Int. Cl.³ B23F *1/02, 21/02*
U.S. Cl. 51—206 P 2 Claims

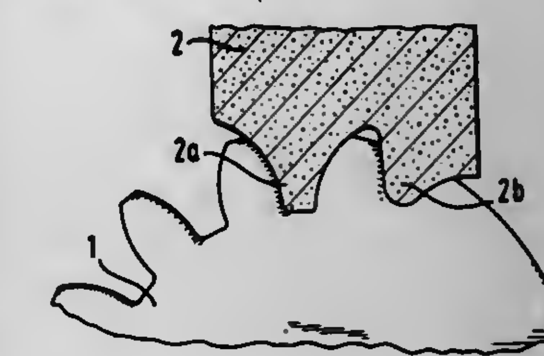

1. A shaped grinding disk for use in forming a spur gear from a smooth-surfaced cylindrical blank, said grinding disk comprising:

a single integral disk member having a grinding surface including a finish grinding tooth and a pre-grinding tooth;

said finish grinding tooth having a profile corresponding to the desired configuration of the flanks of adjacent teeth and to the tooth gap therebetween for a given spur gear to be formed;

said pre-grinding tooth having a profile formed by curved surfaces only; and

said finish grinding tooth and said pre-grinding tooth being spaced by a distance equal to one tooth pitch between adjacent teeth of the spur gear to be formed.

4,299,063
SHARPENER FOR SCREENS OF CIRCULAR BLADES
James Rookus, 2902 Marshall, S.E., Grand Rapids, Mich. 49508
Filed Jul. 13, 1979, Ser. No. 57,217
Int. Cl.³ B24B *3/48*; B26B *19/48*
U.S. Cl. 51—241 S 5 Claims

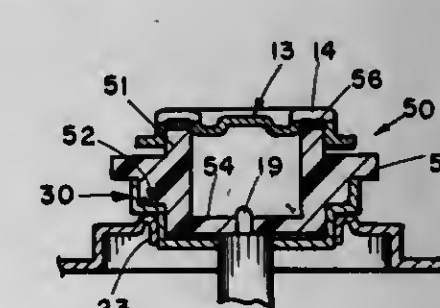

1. In a means for sharpening the screen of an electric shaver of the rotary blade type driven by a rotary shaft, said means comprising a cup having an open upper end, a bottom and circular sides; said bottom having a central opening; said sides intermediate the ends of said cup having a radially outwardly extending offset which forms an external stop surface facing toward said bottom and an internal shoulder facing away from said bottom; a rotor telescopically received within said cup and intermediate its ends having a radially extending flange seated on said shoulder, said rotor having a diameter to closely and rotatably fit within said cup and an annular wall projecting beyond said open end of said cup; an abrasive surface on the projecting end of said wall; a central opening in said bottom of said cup to receive the shaft therethrough and a shaft receiving and engaging opening in said rotor.

4,299,064
TUB SURROUND KIT AND METHOD OF ASSEMBLY
Phillip D. Daniels, 4797 Lake Bluff, West Bloomfield Township, Oakland County, Mich. 48033
Filed Jun. 25, 1979, Ser. No. 51,730
Int. Cl.³ A47K *3/16*
U.S. Cl. 52—35 **2 Claims**

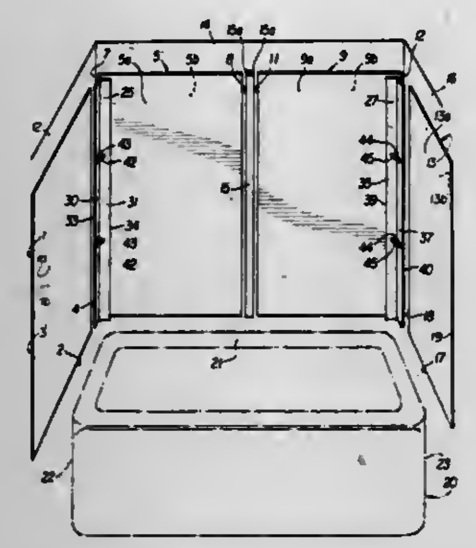

1. A tub surround kit comprising:
(1) four identically sized panels, each of a width dimension to substantially cover either the end walls or one-half of the back wall of a standard tub recess,
(2) a single "H"-shaped joint having a height dimension equal to the height of said panels and having laterally opening elongated recesses for receiving the edge of a panel therein, and
(3) two angular corner members of a height dimension equal to the height of the panels and having side walls mutually perpendicular to one another, each side wall terminating in a flared, yieldably deformable lip,
said kit fitting into a package having an interior packing space corresponding to the length and width dimension of said identical panels and of a thickness equal to the stacked panels and corner members, plus any packing materials; and wherein the kit fits a standard 54 inch tub, said panels are each about 24 inches wide, and the interior package dimension is about 24 inches in width and about 5 inches in thickness and the interior length dimension is the same as the height of the panels.

4,299,065
ACCOMMODATION UNITS
James M. Fairgrieve, Bromley, England, assignor to Sanders and Forster Limited, London, England
Filed Feb. 27, 1979, Ser. No. 15,873
Claims priority, application United Kingdom, Feb. 28, 1978, 7982/78; Mar. 2, 1978, 8424/78
Int. Cl.³ E04B *1/16, 1/348*
U.S. Cl. 52—79.7 **18 Claims**

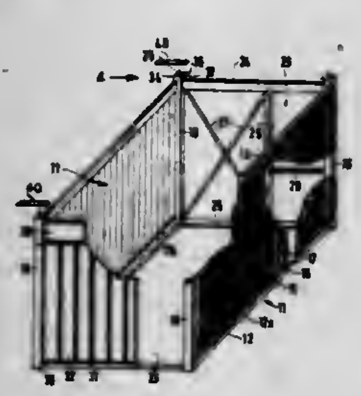

1. A building comprising:
a plurality of accommodation units, each said unit comprising a box-shaped metal housing formed by:
four upright corner posts for attachment to the corner posts of adjacent units;
at least one side wall extending between one pair of said corner posts;
said side wall having an outer surface having ribs extending outwardly therefrom; and
said ribs having heads spaced outwardly from said side wall;
said units being arranged such that spaces separate adjacent said side walls of adjacent pairs of said units;
said spaces being filled with a cast aggregate material to envelop said ribs and said heads, thereby forming an integral rigid structure including said adjacent side walls and said cast aggregate material therebetween.

4,299,066
DOME STRUCTURE HAVING AT LEAST ONE ENVIRONMENTALLY ISOLATABLE COMPARTMENT
Virley P. Thompson, 6700 Franklin Ave., Std. #3, Los Angeles, Calif. 90028
Filed Feb. 25, 1980, Ser. No. 124,521
Int. Cl.³ E04B *1/34;* **E04H** *9/00;* **B64G** *1/00;* **B63C** *11/00*
U.S. Cl. 52—81 **18 Claims**

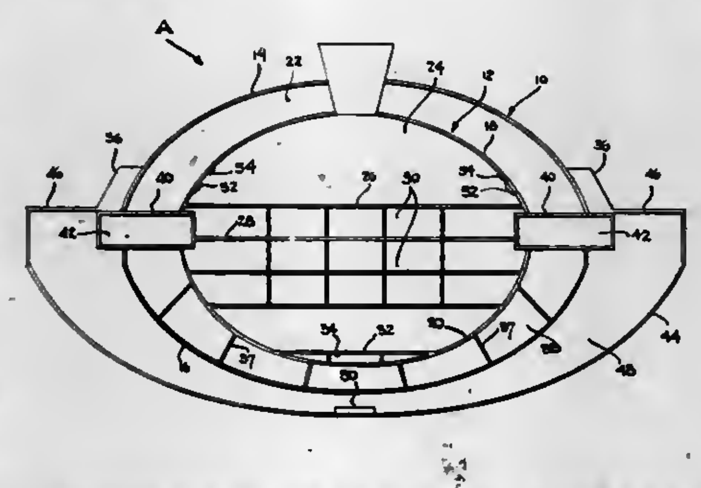

1. A dome structure having a plurality of inhabitable and environmentally isolatable compartments, said dome structure comprising:
(a) a first upper dome section;
(b) a first lower dome section which forms a first environmentally isolated dome chamber therebetween;
(c) a second upper dome section, having a peripheral size smaller than said first upper dome section;
(d) a second lower dome section having a peripheral size smaller than said first lower dome section and which forms a second environmentally isolated dome chamber which is surrounded by and environmentally isolated from said first dome chamber,
(e) a peripherally extending section extending between and engaging peripheral portions of said first and second upper dome section, said peripherally extending section also extending between and engaging peripheral portions of said first and second lower dome sections, to thereby connect said first upper and lower dome sections and said second upper and lower dome sections and also aid in the isolated formation of said first and second dome chambers, said peripherally extending section also being located approximately midway between the upper and lower ends of said first dome sections and between the upper and lower ends of said second dome sections and extending completely therearound, and
(f) mean subdividing said second dome chamber into a plurality of inhabitable and environmentally isolated compartments having a size to be occupied by human beings and said first chamber having at least one compartment having a size to be occupied by human beings, said peripherally extending section also having a size so that it forms at least one compartment with a size to be occupied by human beings.

4,299,067
PARTITION CONNECTOR SYSTEM
Hans G. Bertschi, Upper Montclair, N.J., assignor to J. C. Penney Company, Inc., New York, N.Y.
Filed Oct. 30, 1979, Ser. No. 89,395
Int. Cl.³ E04C *1/10*
U.S. Cl. 52—127 **15 Claims**

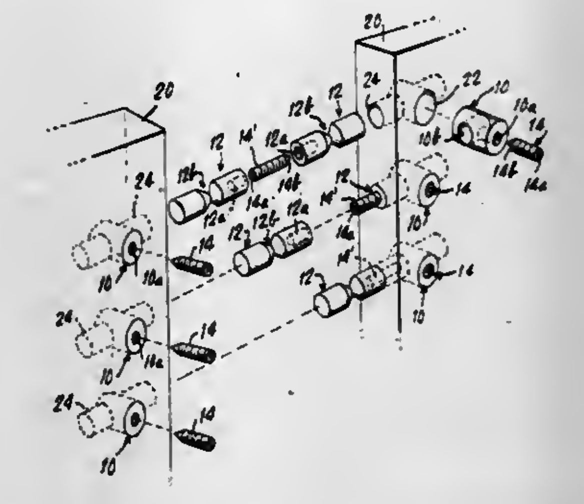

1. Apparatus for connecting two structural members at least one of which has an end face and two side faces, comprising:
first means, mounted in the end face of said one structural member, for connecting said one structural member to a second structural member, said first means comprising:
a connector member disposed in said end face and having an axial bore in one end and a waist portion in its outer surface; and
bridging means, held in said axial bore for connecting said connector member to said second structural member;
second means, mounted in one side face of said one structural member, for holding said connector member in said end face and comprising:
a plug member having an axial bore in one end and cross-bore means for receiving said connector member therein, said axial bore communicating with said cross-bore means, and said waist portion of said connector means registering with said axial bore in said plug member; and
set screw means, disposed in said axial bore in said plug member for engaging and holding said connector member in said plug member.

4,299,068
WINDOW LINING ARRANGEMENT, PARTICULARLY FOR INCLINED WINDOWS
Eigard Nielsen, Ostbirk, Denmark, assignor to V. Kann Rasmussen Holding A/S, Soborg, Denmark
Filed Mar. 7, 1980, Ser. No. 128,159
Claims priority, application Denmark, Mar. 21, 1979, 1165/79
Int. Cl.³ E06B *1/04*
U.S. Cl. 52—204 **4 Claims**

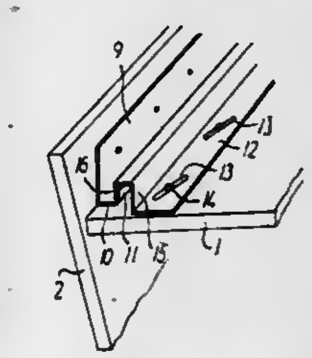

1. A window lining arrangement, particularly for inclined windows, composed of plates which are connected to form a box-shaped form, one edge portion of which is fastened to the window frame while its other edge is level with the inside of the wall in which the window is installed, and where an end edge of a first one of two plates adjoining in a corner closely abuts on the inside of the second plate, characterized in that said second plate extends beyond the end edge of the first plate and, on the inside of the extended portion, carries a fixed angle rail having a projecting flange which forms an outer abutment for the end edge portion of the first plate, and said first plate at its end edge carries a displaceable rail comprising a first flap for engagement behind a second flap on the projecting flange of the fixed rail, said displaceable rail being guided in such a manner that a displacement of the displaceable rail along its longitudinal axis causes the plates to be tightened against each other.

4,299,069
PREFABRICATED WALL FACING PANELS
Alfred Neumann, P.O. Box 159, Acton, Ontario, Canada L7J 2M3
Continuation-in-part of Ser. No. 829,337, Nov. 28, 1977, abandoned. This application Dec. 18, 1978, Ser. No. 970,292
Int. Cl.³ E04B *1/38*
U.S. Cl. 52—309.4 **6 Claims**

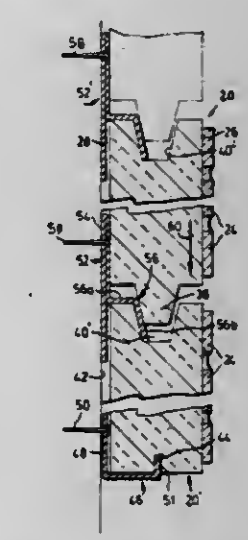

1. A wall facing applied to a support surface and comprising a plurality of prefabricated wall panels, and means attaching said panels to said surface;
said panels each comprising:
a rigid sheet of a thermally insulating material having an outer surface, a generally flat inner surface, two opposite end edges, and two opposite side edges;
the panels being arranged in a plurality of aligned horizontal rows including a bottom row with said side edges disposed horizontally and with the panels in each row in abutting end-to-end relationship, the lower side edges of the panels in said bottom row being formed with aligned longitudinally extending grooves and the remaining side edges of the panels being shaped to define co-operating tongues and grooves, the rows of panels being interlocked with one another by engagement of the tongue and groove side edges of the respective panels;
and wherein said means attaching the panels to a support surface consists solely of a plurality of elongate attachment members disposed at the inner sides of said panels generally co-extensively with joint lines defined by said side edges of the panels, each of said attachment members comprising a first limb attached to said support surface, and a second limb which projects outwardly from said first limb and is engaged in said groove of at least one of the panels, the attachment members at the lower side edges of the panels in said bottom row being generally U-shaped with said first limbs longer than said second limbs and the remaining attachment members having a cross-sectional shape resembling a lower case letter h.

4,299,070

BOX FORMED BUILDING PANEL OF EXTRUDED PLASTIC

Heinrich Oltmanns, 2905 Edewecht, Jeddeloh I, Fed. Rep. of Germany, and Axel Granz, Oldenburg, Fed. Rep. of Germany, assignors to Heinrich Oltmanns, Jeddeloh, Fed. Rep. of Germany

Filed Jan. 21, 1979, Ser. No. 50,653

Claims priority, application Fed. Rep. of Germany, Jan. 30, 1978, 2828769

Int. Cl.³ E04C *1/10, 1/30*

U.S. Cl. 52—309.11 **18 Claims**

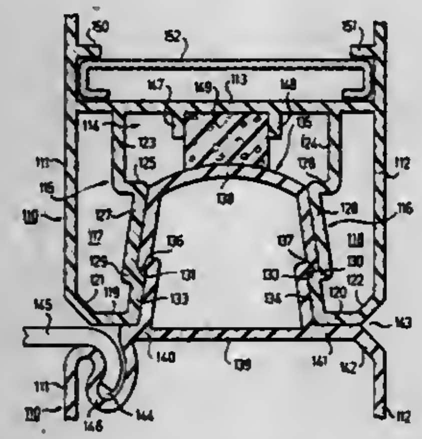

1. A box formed building panel formed of, preferably transparent, extruded plastic materials, said panel having opposing side walls and end walls normal thereto, said panel containing partition walls forming a plurality of internal hollow spaces; one of said end walls having a groove (**114**) extending along its entire length and running parallel to said side walls, the bottom of said groove being defined by a partition wall (**113**) adapted to support a resiliently deformable sealing material (**149**), the walls (**115, 116**) of said groove and their junction with said bottom partition wall being inwardly spaced from the side walls of the panel, said groove walls being outwardly diverging and including converging locking shoulders (**131, 132**); the other of said end walls having a projection (**135**), the cross-sectional configuration of which is generally complementary to the cross-sectional configuration of said groove (**114**), said projection having locking shoulders in the walls thereof lockingly engageable with the locking shoulders of the groove walls of an adjacent, similarly formed building panel for joining the panels together, said end walls having wall portions in the areas not occupied by said groove or projection abuttable when the projection of one panel is inserted in the groove of an adjacent panel.

4,299,071

BRICKS

Khoo Tian, 316B, Jalan Pudu, Kuala Lumpur, Malaysia

Filed Apr. 11, 1980, Ser. No. 139,696

Claims priority, application United Kingdom, Apr. 11, 1979, 12715/79

Int. Cl.³ E04C *1/10*

U.S. Cl. 52—593 **5 Claims**

1. In a brick comprising a top surface, a bottom surface and two end surfaces, the improvement in which the top surface and one of the two end surfaces are each formed with an indented region such that a plurality of identical bricks can be bonded together in an abutting, non-interlocking manner by placing a bonding agent in the said indented regions to form thereby a wall or other structure in which the bonding agent is fully concealed, the indented region in the top surface of the brick being in the form of a V-shaped depression extending lengthwise along the brick and occupying a major porportion of the top surface of the brick; and in which the bottom surface of the brick is formed with at least one indented area.

4,299,072

TURRET DRIVE SYSTEM

John H. Holstein, 5304 N. Colonial - No. 102, Fresno, Calif. 93704, assignor to John H. Holstein, Fresno, Calif.

Filed Jan. 17, 1979, Ser. No. 4,161

Int. Cl.³ B67B *3/08, 3/20*

U.S. Cl. 53—306 **17 Claims**

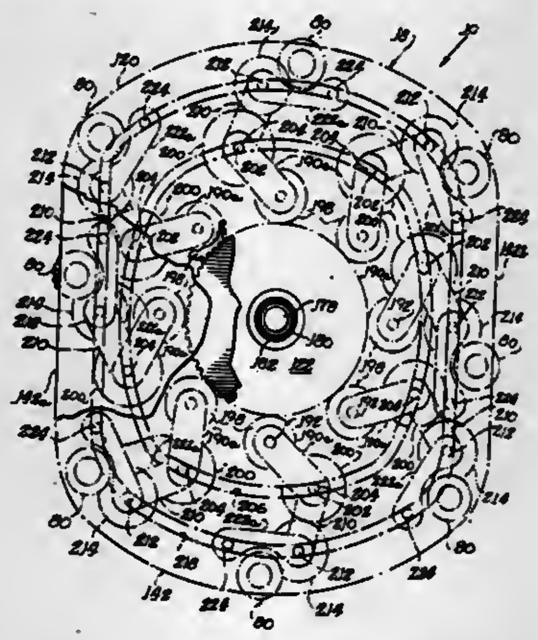

1. A system for moving at least one operating device through a predetermined endless path, said system including, in combination, a substantially horizontally disposed turret plate having a center axis and defining an endless guide track circumferentially of said center axis,

a primary drive shaft,

at least one operating device supported by said turret plate and having operative relation with said endless guide track for movement therealong and relative thereto with the axis of said operating device disposed substantially normal to said turret plate,

and means interconnecting said operating device to said primary drive shaft so that rotation of said primary drive shaft effects movement of said operating device along said endless guide track,

wherein said last mentioned means includes gear drive means operative to effect substantially constant speed movement of said operating device along said endless track, said endless guide track varies in its radial distance from the center axis of said turret, and said last mentioned means further includes linkage means interconnecting said operating device with said gear train means.

4,299,073

MACHINE AND METHOD FOR PACKAGING TRAVELERS CHECKS

Roman M. Golicz, Clinton; William H. Gunther, Jr., Mystic, and James W. Hough, Madison, all of Conn., assignors to American Express Company, New York, N.Y.

Filed Nov. 9, 1979, Ser. No. 93,001

Int. Cl.³ B65B *57/16, 11/48*

U.S. Cl. 53—493 **3 Claims**

1. A mechansim for packaging travelers checks having serial numbers thereon in an envelope, each envelope blank has a central panel, an end panel and a kite flap, said end panel being narrower than the forms and checks, and said forms and checks being deposited on said end panel with a portion thereof containing the serial number of the forms and checks extending beyond said end panel, comprising conveyor means, means for moving said conveyor means, means for depositing an envelope blank on said conveyor means, means for depositing a purchase agreement form having a serial number on said envelope blank, means for depositing travelers checks having serial numbers thereon on said envelope blank, first detecting means for reading said serial numbers on said form and for reading the serial numbers on said checks, means connected to said first detecting means for determining whether the serial numbers on said checks and said forms are in a predetermined sequence, and means connected to said first detecting means for determining whether the serial number on the form to be associated with a particular envelope blank corresponds to the lowest serial number on the checks to be associated with said particular envelope blank, second detecting means are provided for determining whether the envelope blank has been fed, third detecting means are provided to detect whether a form and a check has been fed and means are provided whereby detection by any of said detecting means or determining means of a malfunction will result in stopping the operation to permit the malfunction to be corrected, a storage tray is provided to hold the envelope blanks and wherein means are provided to feed envelope blanks from the tray to a first holding means, means for removing the envelope blanks from the said first holding means and depositing them on the conveyor means, said forms

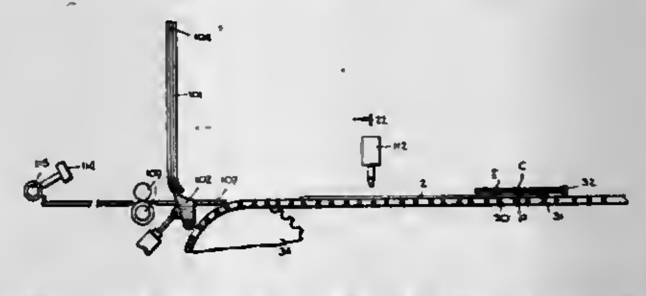

and checks being stored in storage trays and vacuum means being provided to remove each from its respective tray and deposit them on second and third holding means, respectively, said vacuum means including vacuum belts to transport the forms and the checks from the storage trays to said second and third holding means and said first detecting means underlying said vacuum belts to read the serial numbers on the forms and the checks, means to remove the forms and the checks from the said second and third holding means and depositing them on said conveyor means, said removing means comprising upstanding pin means on said conveyor means to remove the envelope blanks, the forms and checks from their respective first, second and third holding means and deposit them on the conveyor means, said pin means comprising first pins for removing the envelope blanks and second pins for removing the checks and forms, said first and second pins being of different heights, said first pins being shorter than and forward of said second pins, said first pins being adapted to remove the envelope blank from said first holding means and depositing it on the conveyor means, said second pin being adapted to remove the forms and checks from said second and third holding means and deposit them on said end panel of said blank so that said forms and checks extend beyond said end panel, means for folding the envelope blank around said form and said travelers checks and means for for sealing the edges of the blank.

4,299,074

METHOD AND APPARATUS FOR COMPRESSING VOLUMINOUS MATERIAL EASY TO COMPRESS

Ingvar H. Johansson, Alvesta; Per-Olof Sanden, Billesholm; Pähr O. A. Holmgren, Katrineholm, and Helle G. Johansson, Alvesta, all of Sweden, assignors to AB Maskinarbeten, Alvesta and Gullfiber AB, Billesholm, both of, Sweden

Filed Nov. 14, 1979, Ser. No. 94,299

Claims priority, application Sweden, Nov. 16, 1978, 7811841

Int. Cl.³ B65B *63/02*

U.S. Cl. 53—529 **7 Claims**

1. An apparatus for compressing voluminous easy to compress material comprising a compressing portion consisting of at least one floor and two opposed substantially vertical walls, means to move such walls toward each other so that the material located on the floor between the walls can be compressed to a volume smaller than the original one, at least one belt running over the upper edges of the opposed walls of the compressing portion and being fixed at one end and connected at the other end to a stretching member means to actuate the stretching member to stretch the belt, vertically movable members that act from above on the belt inside the respective wall of the compressing portion to, means to vertically move said members to press on the belt to thereby stretch and synchronously lower the belt between the walls and thereby vertically

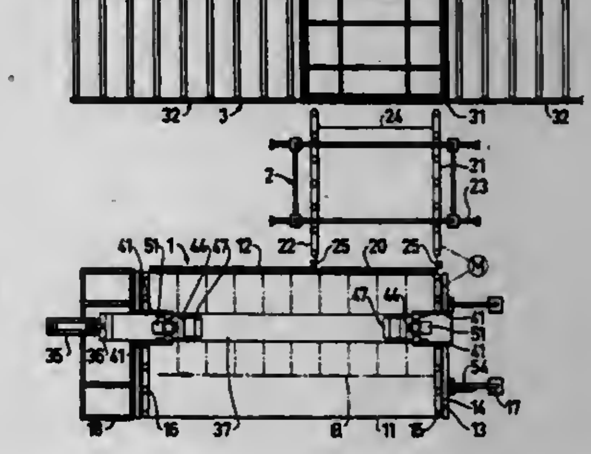

compress the material, a transferring portion consisting of at least one floor and two opposed, parallel and stationary walls located at such a distance to each other that the respective wall aligns with the walls of the compressing portion when the walls of the compressing portion are in their positions closest to each other, a storage or transport crate with floor and end wall sides in a position for receiving the compressed material being located with its floor beneath the floor of the transferring portion and with its end walls each on a side outside of the walls of the transferring portion, which crate is connected to one side of the opening remote from the transferring portion between the end walls of the crate.

4,299,075

METHOD FOR PACKING ARTICLES INTO A NUMBER OF STRIPS OF PACKING MATERIAL AND APPARATUS FOR CARRYING OUT THE METHOD

Hans Gram, Vojens, Denmark, assignor to Brodrene Gram AS, Vojens, Denmark

Filed Oct. 17, 1979, Ser. No. 85,590

Claims priority, application Denmark, Oct. 26, 1978, 4764/78

Int. Cl.³ B65B *9/06;* **B60B** *51/30*

U.S. Cl. 53—550 **3 Claims**

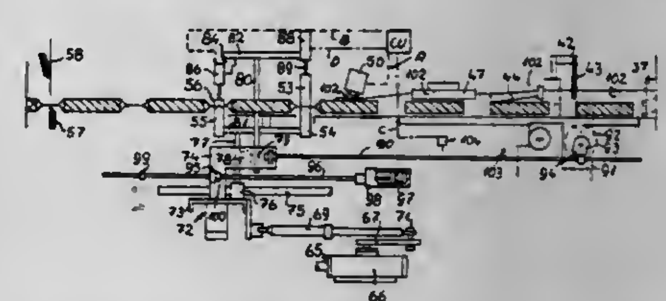

1. Apparatus for packing articles in a plurality of packing lines into a number of strips of packing material and for sealing and severing the strips between adjacent articles, comprising a filling station having means for arranging the articles into the strips; a longitudinal welding station having means for welding the longitudinally extending margins of each strip together for forming a plurality of packing tubes; a slide and a guiding means for guiding the slide in the longitudinal direction of the strips; a driving device connected to the slide for applying a

reciprocating movement to the slide between an upstream position and a downstream position, the distance between said positions being longer than the length of the packings to be made; a set of heating means supported by the slide and comprising an upper and a lower rail extending transversely with respect to and above and below the plurality of strips, a set of clamping means downstream from said heating means also supported by the slide and comprising a clamping rail extending transversely with respect to the plurality of strips at one side of the strips, and a number of clamping feet corresponding to the number of strips, the clamping feet being arranged opposite the clamping rail and along the other side of the strips, the set of heating means and the set of clamping means being arranged on the slide with a mutual distance corresponding to the length of the packings to be made, moving means further supported by the slide for moving the set of heating means and the set of clamping means into engagement with the tubes so as to respectively heat the tubes between two adjacent articles in each tube and to clamp previously heated portions of the tubes between two adjacent articles in each tube, and the apparatus being provided with activating means adapted to activate said moving means so as to cause engagement of the set of heating and the set of clamping means with respect to the tubes adjacent the upstream position of the slide, further moving means still further supported by the slide for disengaging the heating means with respect to the tubes, and the apparatus being provided with further activating means adapted to activate said moving means for disengaging the heating means at a predetermined intermediate position of the slide between the upstream and the downstream positions, the distance between the intermediate position and the upstream position being shorter than the length of the packings to be made; individual moving means still further supported by the slide for individually disengaging the clamping feet, and the apparatus being provided with individual sensing means positioned upstream with respect to the upstream position of the slide and adjacent each strip so as to activate said individual moving means for individually disengaging the clamping feet in correspondence with pulses caused by indications provided on each strip and having a pitch corresponding to the required length of the packings to be made and so as to disengage the clamping feet individually at positions of the slide between the intermediate position and the downstream position of the slide, the apparatus, moreover, having a separation station comprising cutting means and securing means for respectively severing said tubes into individual packings and to secure the cut ends of the tubes during the return stroke of th slide; the apparatus, moreover, having means for activating said cutting and said securing means at the termination of the forward stroke of the slide and for disengaging the securing means at the termination of the return stroke of the slide.

4,299,076
WRAPPING APPARATUS AND METHOD
John R. Humphrey, Naples, Fla., assignor to International Packaging Machines, Inc., Naples, Fla.
Filed Sep. 4, 1979, Ser. No. 72,471
Int. Cl.³ B65B *11/04*
U.S. Cl. 53—587 **7 Claims**

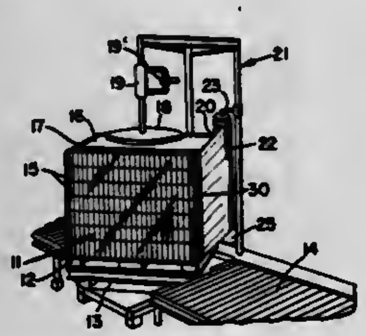

1. An apparatus for wrapping a stabilizing overwrap about a load mounted on a pallet disposed on a rotatable motor driven turntable, said turntable having substantially horizontal support surface means upon which said pallet is adapted to be directly mounted, a supply roll of overwrap material in web form, means supporting said roll for rotation about an axis substantially parallel to the turntable axis, said roll being located adjacent the turntable whereby the leading end of the web may be made fast relative to the load so that the web may be unrolled and disposed around the load during rotation of the turntable, and anchoring means on said turntable for positively engaging and holding said pallet against movement relative to the turntable as the load is being wrapped, said anchoring means comprising pallet engaging means movably mounted on the turntable for displacement between an idle position below said support surface means while the pallet is being placed on the turntable and a pallet locking position at or above said support surface in anchoring engagement with the underside of a pallet on said support surface means, and means for actuating said anchoring means for displacing said pallet engaging means between said positions, said actuating means comprising relatively stationary means mounted adjacent the turntable, and means on the turntable operably associated with said anchoring means adapted to engage said stationary means during rotation of the turntable and automatically actuate said anchoring means to lock the pallet to the turntable.

4,299,077
ROTARY-SCYTHE MOWER WITH CUTTER DISCS
Albert Wattron, Schwenheim, France, assignor to Belrecolt S.A., Marmoutier, France
Filed Oct. 4, 1979, Ser. No. 81,855
Claims priority, application France, Oct. 11, 1978, 78 29465
Int. Cl.³ A01D *55/262, 55/18*
U.S. Cl. 56—13.6 **6 Claims**

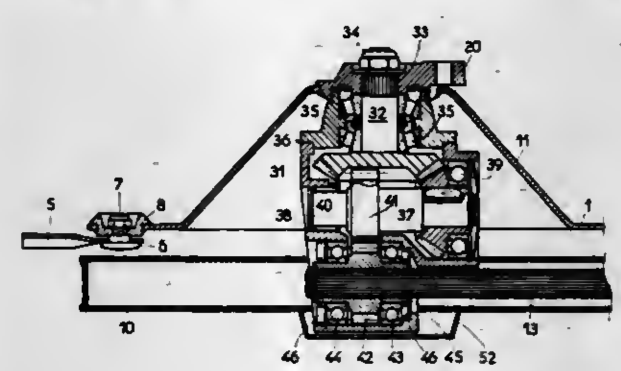

1. In a rotary mower comprising a plurality of horizontal cutter discs mounted side by side for rotation about vertical axes, a horizontal transmission shaft extending between and below the discs; the improvement comprising a hollow element secured to one of the discs, and drive means disposed at least partially in said hollow element, said drive means including an intermediate shaft disposed higher than and parallel to said transmission shaft, gearing interconnecting said shafts, and bevel gearing interconnecting said intermediate shaft and said disc to convert rotary movement of said intermediate shaft about a horizontal axis into rotary movement of said disc about a vertical axis.

4,299,078
MOWER-CONDITIONER
Anton Werner, Saverne, France, assignor to Kuhn, S.A., Saverne, France
Filed Jun. 4, 1979, Ser. No. 45,325
Claims priority, application France, Jun. 13, 1978, 78 18644
Int. Cl.³ A01D *35/26, 43/10, 57/02*
U.S. Cl. 56—14.5 **6 Claims**

1. Mower-conditioner comprising a cutter device and a drum, means for selectively driving the drum in rotation in either the one direction or the other about a horizontal axis perpendicular to the direction of travel of the machine, the said drum, provided with radially extending flails, cooperating with a first conditioning apparatus comprising two rollers, one of them being at least partially situated lower than and behind the axis of the drum, the said drum cooperating simultaneously with a comb situated higher than and before the axis of the drum, the flails passing between the teeth of the comb, and

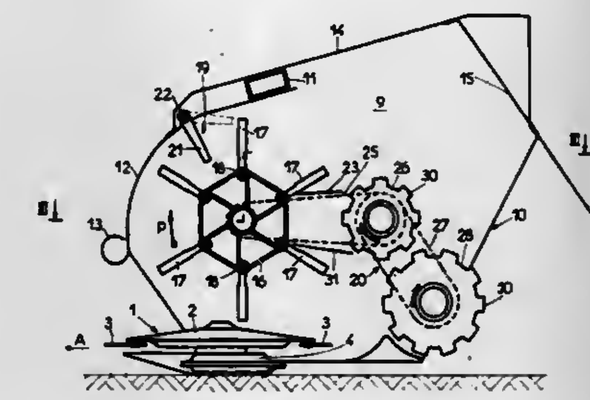

means for driving the rollers in rotation in opposite directions to one another in order to pass the fodder between them from beneath the axis of the drum when the drum is rotating in a direction to pass fodder beneath the axis of the drum and to drive said rollers in rotation in the same direction as each other and as the drum when the drum is rotating in the other direction to pass the fodder above the axis of the drum.

4,299,079
MACHINE FOR RAKING OR SWEEPING
Phillip E. Lambert, Rte. #2, Zimmerman, Minn. 55398
Filed Jun. 2, 1980, Ser. No. 155,396
Int. Cl.³ A01D *7/02*
U.S. Cl. 56—16.7 **10 Claims**

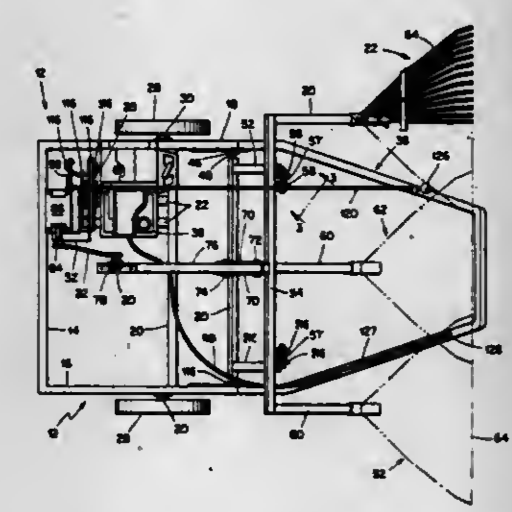

1. A machine comprising a frame, wheel means supporting said frame for movement across a surface to be swept, upwardly extending first arm means having lower and upper ends, said first arm means being pivotally mounted on said frame adjacent its lower end for oscillatory movement about a first horizontal axis fixedly located with respect to said frame, downwardly extending second arm means having lower and upper ends, said second arm means being pivotally connected adjacent its upper end to said first arm means adjacent its said upper end for oscillatory movement about an arcuately shiftable second horizontal axis provided by the upper end of said first arm means and at an elevation above said first axis, power means for oscillating said first and second arm means about their said respective first and second axes, and a sweeping unit carried by said second arm means adjacent the lower end thereof, said downwardly extending second arm means extending both downwardly and away from said second axis, whereby said sweeping unit is constrained to be moved upwardly away from said first arm means, then downwardly and then towards said first arm means to perform a sweeping action as said frame is moved across a surface to be swept.

4,299,080
CROP DIVIDER FOR A HARVESTER
Ronald Kelly, R.R. #1, Tampico, Ill. 61283
Filed Jul. 28, 1980, Ser. No. 172,856
Int. Cl.³ A01D *63/00*
U.S. Cl. 56—314 **11 Claims**

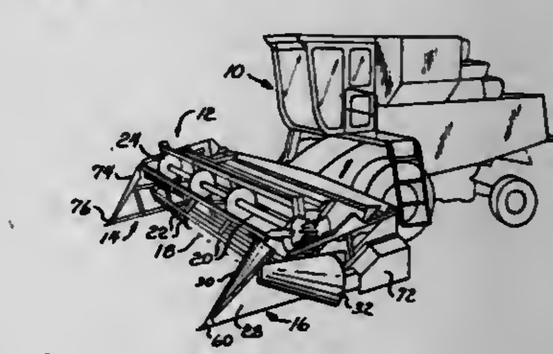

9. A crop divider for a harvester having a grain platform with a cutter reel, comprising:
a pair of divider plates, one attached to each end of said grain platform, both plates having a bottom edge, a leading edge extending upwardly and inclined rearwardly from the front of the bottom edge and a top edge extending rearwardly from the leading edge;
a tapered semi-conical surface extending inwardly toward said grain platform along the leading edge of each of said plates; and
a tapered semi-conical surface extending outwardly along the top surface of each of said plates.

4,299,081
GRAPE HARVESTER
Robert H. Harris, Indianapolis; Troy G. Humphrey, Beech Grove, and John J. Stimson, Jr., Indianapolis, all of Ind., assignors to Labeco Harvesters, Inc., Clovis, Calif.
Filed Feb. 11, 1980, Ser. No. 120,542
Int. Cl.³ A01D *46/26, 46/28*
U.S. Cl. 56—330 **2 Claims**

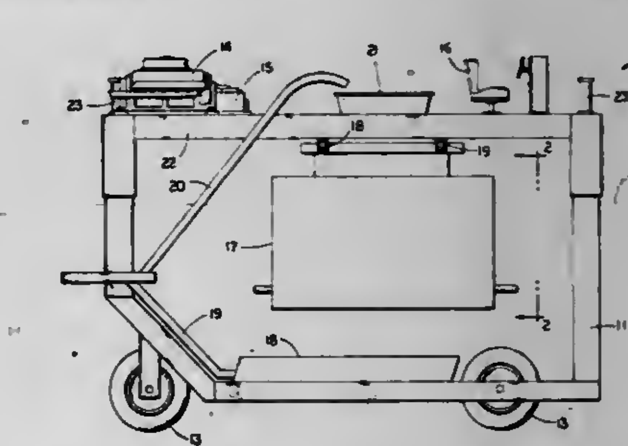

1. A harvester comprising:
frame means operable to move along in straddling fashion a row of plants having growing items thereon and including a receptacle to catch said items falling from said plants;
a head pivotally mounted on said frame means to pulsate said plants to cause items growing thereon to fall therefrom into said receptacle, said head including:
a frame pivotally mounted to said frame means and having a pair of downwardly extending spaced apart supports forming a channel through which said row of plants may pass;
a pair of horizontally movable arms mountable to said supports with spaced apart distal ends positionable on opposite sides of said row of plants;
driving means mounted on said frame and operatively asso-

ciated with said arms to reciprocate said arms back and forth against said plants while limiting movement of one arm to approximately the same horizontal direction of movement as the other arm, said driving means including a first and second crank shaft rotatably mounted on said frame, a source of energy having a rotatable output operatively driving said first and second crank shafts which are connected to said arms maintaining a constant spacing between said distal ends as said arms are reciprocated by said driving means, each arm including at least a pair of links with top ends pivotally mounted to said frame and bottom ends pivotally connected to the attached arm suspending the attached arm therefrom and allowing a swinging arc movement of said attached arm in response to said driving means and independent of pivotal movement of said frame, said distal ends being rigid elongated members extending in the direction of said row of plants;

counterweight means including a first and a second off centered counterweight respectively on said first and second crank shaft rotatably mounted on said frame, said counterweight means being operable to provide a vibration neutralizing force in a direction opposite of the direction of movement of said arms; and

timing means operatively associated with said first and second off centered counterweights along with said first and second crank shafts being operable to rotate each counterweight when each crank shaft rotates, said timing means including first and second shafts rotatably mounted on said frame and operably driven with said first and second crank shaft but isolated from said arms providing dampening of vibration imparted to said frame to said arms.

4,299,082

METHOD AND MACHINERY FOR MANUFACTURING METALLIC CORDS IN LAYERS

Luciano Tarantola, Milan, Italy, assignor to Industrie Pirelli S.p.A., Milan, Italy

Filed Jan. 28, 1980, Ser. No. 116,205

Claims priority, application Italy, Feb. 6, 1979, 19915 A/79

Int. Cl.³ D07B *3/00*

U.S. Cl. 57—9 21 Claims

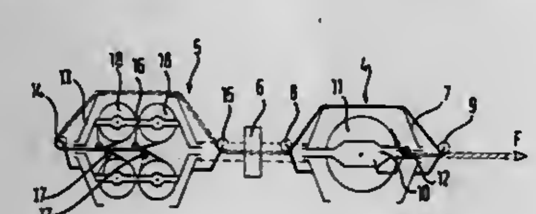

1. A method for producing metallic cords adapted for reinforcing an elastomeric structure, each said cord having a central core and at least one crown layer comprising metallic wires, the wires of each layer being helically wound, and substantially parallel to each other around the radially innermost layers and the said central core, the method comprising first pre-disposing a pay-off of a first group of wires to form the innermost portion of the cord, and a pay-off of a second group of wires for the relative crown layer, and then applying to the wires of each group, a force that distributes the wires fed from their relative pay-off bobbins, then permanently deforming, at least flexionally, the wires of said second group and winding said wires helically and parallel to each other around said cord portion which is exposed to the said second group, thereby producing the crown layer, and guiding the so-formed cord towards a means for collecting said cord, said method comprising the steps of:

(a) distributing the said second group of wires in the form of a bundle of distinct wires which are not cabled together;

(b) rotating said wires in the same sense twice to form a double-twisted strand;

(c) untwisting said strand, with the same entity as that of the two previous twistings to separate said strand into its wires and disposing these wires, both parallel and side-by-side, conferring to the thus disposed wires that are also permanently deformed by flexions, a torsion having the same entity as that of the previous untwisting while simultaneously winding the said separated wires around the wires of said first group, thereby to form the crown layer on said innermost cord portion.

4,299,083

WRAP-WINDING SPINNING MACHINE

Wolfgang Igel, Ebersbach; Franz Freibichler, Albershausen; Werner Fehr, Uhingen-Diegelsberg, and Willi Pfeifer, Eislingen, all of Fed. Rep. of Germany, assignors to Firma Zinser Textilmaschinen GmbH, Ebersbach, Fed. Rep. of Germany

Filed Apr. 4, 1980, Ser. No. 137,210

Claims priority, application Fed. Rep. of Germany, Apr. 5, 1979, 2913762

Int. Cl.³ D02G *3/36;* D01H *7/18, 11/00*

U.S. Cl. 57—18 12 Claims

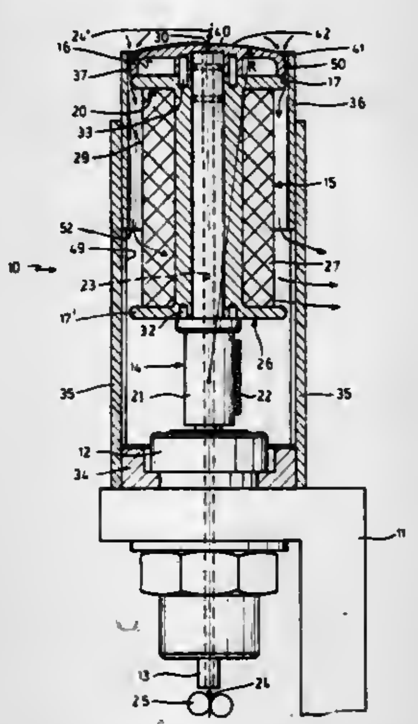

1. A wrap-winding spinning machine including a wrap-winding apparatus for producing wrapped yarns including slivers and at least one thin winding thread, preferably a filament, said wrap-winding apparatus further including a rotor to be driven at very high rpm and a yarn channel coaxial with a rotary axis thereof, said rotor having a rotatably supported, driven hollow spindle and a bobbin having a rotor head, and at least a lower area interchangeably placed on the hollow spindle, said bobbin arranged to carry the winding thread in the form of a thread winding body and further being surrounded in a spaced-apart manner by a yarn-ballooning limiter having an area and a closed circumferential wall, said yarn-ballooning limiter arranged to circumferentially surround said rotor head having an end face located at the top of said thread winding body and arranged to form a narrow annular gap between the circumference thereof and said yarn-ballooning limiter characterized in that said yarn-ballooning limiter has at least one air outlet opening disposed at a distance below said annular gap between said yarn-ballooning limiter and said rotor head, through which air continuously exits, and further wherein air continuously flows from above said rotor head through the annular gap, that said end face of said rotor head is provided with an inlet for said yarn channel of said rotor and is curved in a convex manner such that from the vicinity of the yarn-ballooning limiter up to the inlet of said yarn channel it forms at least substantially a thread guide face on which the winding thread glides.

4,299,084

OPEN END ROTOR FOR A SPINNING MACHINE

Kazuo Seiki, Kariya; Takashi Katoh, Toyota, and Yoshiaki Yoshida, Obbu, all of Japan, assignors to Kabushiki Kaisha Toyoda Jidoshokki Seisakusho, Kariya, Japan

Filed May 6, 1980, Ser. No. 148,039

Claims priority, application Japan, May 14, 1979, 54-62990[U]

Int. Cl.³ D01H *1/135*

U.S. Cl. 57—58.89 5 Claims

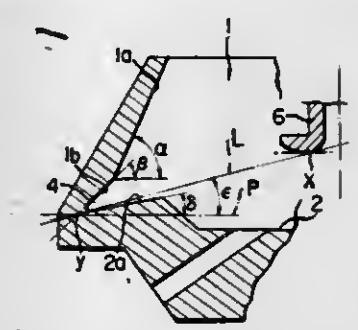

1. In an open end spinning machine comprising a spinning rotor having a fiber sliding surface in the form of a frusto-conical shape consisting of a first fiber sliding portion, onto which discrete fibers are first supplied, and a second fiber sliding portion connected to said first fiber sliding portion; a bottom surface, and a fiber collecting groove formed between said second fiber sliding portion and said bottom surface; and a yarn take-up tube centrally extending into said spinning rotor to take up a yarn therethrough, which is formed by collecting and twisting said supplied fibers in said collecting groove: the improvement wherein an angle (α) formed by said first fiber sliding portion with respect to a plane of rotation of said spinning rotor is larger than an angle (β) formed with respect to said plane of rotation by said second fiber sliding portion, and a difference between an angle (δ) formed with respect to said plane of rotation by a fiber guide portion of said bottom surface and an angle (ϵ) included between said plane of rotation and a yarn taking off line connecting the lowermost point of said yarn take-up tube with an intersection of said second fiber sliding portion and said fiber guide portion is in the range of about $\pm 5°$.

4,299,085

TEXTILE SPINDLE MOUNTING

Edward J. Olowinski, and Richard A. John, both of Erie, Pa., assignors to Lord Corporation, Erie, Pa.

Filed Oct. 8, 1980, Ser. No. 195,290

Int. Cl.³ D01H *7/12*

U.S. Cl. 57—130 6 Claims

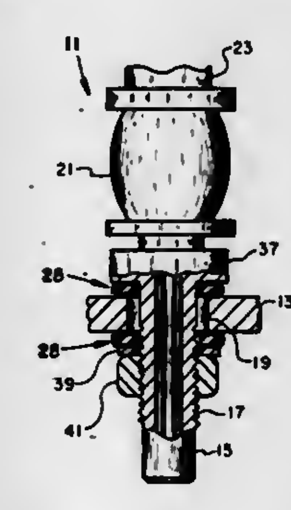

1. In a textile spindle assembly of a textile machine, said textile spindle assembly including a bolster threaded at one end and extending upwardly through an opening in the rail of said textile machine, a bolster nut being moveable along said threaded portion of said bolster below said rail and a bolster washer being attached to said bolster above said rail, and a whorl, spindle, ring and bobbin extending upwardly from said bolster and concentric therewith to form the upper portion of said spindle assembly, the improvement comprising a pair of spindle mounts for securing said spindle assembly to said rail and isolating noise and vibration therebetween, each of said spindle mounts including a rigid bottom washer, a top washer of greater diameter than said bottom washer, said top washer being formed with a downwardly extending end portion, an annular layer of elastomeric material concentrically disposed between and attaching to said top and bottom washers, the outer edge of said elastomer layer extending outwardly from said bottom washer and attaching to said end portion of said top washer, said elastomer layer being formed with a contoured section adjacent said outer edge thereof, one of said spindle mounts being disposed concentric with said bolster between said bolster nut and said rail and the other of said spindle mounts being disposed concentric with said bolster between said bolster washer and said rail, whereby upon application of compression loads to said spindle mounts by tightening of said bolster nut to secure said spindle assembly to said rail said elastomer layer is selectively restricted from bulging outwardly to accommodate said compression loads while providing isolation of noise and vibrations between said spindle assembly and said rail.

4,299,086

UTILIZATION OF ENERGY OBTAINED BY SUBSTOICHIOMETRIC COMBUSTION OF LOW HEATING VALUE GASES

Ajay M. Madgavkar, Pittsburgh; Roger F. Vogel, Butler, and Harold E. Swift, Gibsonia, all of Pa., assignors to Gulf Research & Development Company, Pittsburgh, Pa.

Filed Dec. 7, 1978, Ser. No. 967,170

The portion of the term of this patent subsequent to Mar. 4, 1997, has been disclaimed.

Int. Cl.³ F02C *3/22*

U.S. Cl. 60—39.06 14 Claims

1. A method for the recovery of energy from a gas stream which has a heating value that varies with time and has an average heating value in the range of about 5 to about 200 Btu/scf. and comprising a combustible component selected from carbon monoxide and up to about 50 mol percent hydrogen, the method which comprises the steps passing said gas stream admixed with a substantially constant rate of air for combustion at an overall average air equivalence ratio of between about 0.2 and about 0.9 in contact with an oxidation catalyst in at least one combustion zone at a temperature high enough to initiate and maintain combustion of said gas stream, and utilizing the heat energy produced in said gas stream by said combustion.

4,299,087

GAS TURBINE PLANT WITH FLUIDIZED BED COMBUSTOR

Anders Kullendorff, Aby, and Tona Vahtra, Norrkoping, both of Sweden, assignors to Stal-Laval Turbin AB, Sweden

Filed Apr. 2, 1979, Ser. No. 26,259

Claims priority, application Sweden, Apr. 11, 1978, 7804023

Int. Cl.³ F02C *3/26, 7/268*

U.S. Cl. 60—39.14 M 2 Claims

1. A gas turbine plant, comprising:

a gas turbine;

compressor means operatively associated with said turbine for generating compressed air;

starter means for rotating said compressor means during an inital starting period;

a fluidized bed combustor connected to receive compressed air from said compressor means and to deliver high temperature products of combustion to drive said turbine during normal operation;

auxiliary combustion chamber means connected to receive compressed air from said compressor and to provide high temperature products of combustion to said fluidized bed combustor during said initial starting period to heat the bed material thereof to an ignition temperature; and

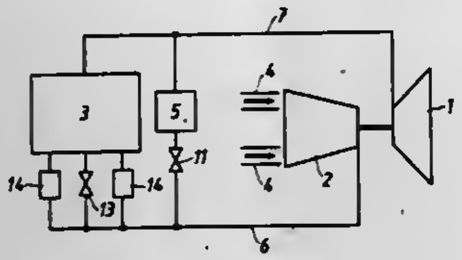

ignition combustion chamber means connected, in parallel with said fluidized bed combustor and said auxiliary combustion chamber means, to receive compressed air from said compressor and to provide high temperature products of combustion to drive said turbine during said initial starting period.

4,299,088
CYCLIC LOAD DUTY CONTROL FOR GAS TURBINE
William I. Rowen, Schenectady; Thomas E. Ekstrom, Scotia, and Donald L. Rexford, Schenectady, all of N.Y., assignors to General Electric Company, Schenectady, N.Y.
Filed Oct. 26, 1979, Ser. No. 88,633
Int. Cl.³ F02C *9/48*
U.S. Cl. 60—39.27 **5 Claims**

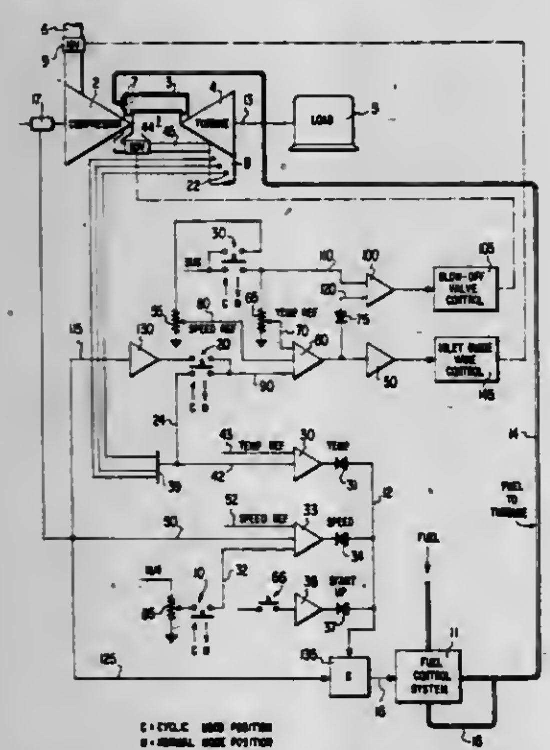

1. A control system for a gas turbine having a combustion chamber, which comprises:
a plurality of loop control means for generating a fuel control signal for controlling the fuel flow to said combustion chamber in response to different operating parameters of said gas turbine,
means for generating an air control signal for controlling air flow to said combustion chamber in response to different operating parameters of said gas turbine,
said means for generating a fuel control signal being responsive, in a first mode of operation, to the detected speed and temperature of said gas turbine to vary the fuel flow accordingly, and said means for generating an air control signal being responsive, in said first mode of operation, to said temperature of said gas turbine to vary the air flow to maintain said temperature substantially constant, and
said means for generating a fuel control signal also being responsive, in a second mode of operation, to said temperature of said gas turbine to maintain said temperature substantially constant, and said means for generating an air control signal also being responsive, in said second mode of operation, to said detected speed of said gas turbine to vary the air flow to maintain said speed substantially constant.

4,299,089
SECONDARY AIR CONTROL SYSTEM IN AN INTERNAL COMBUSTION ENGINE
Keisou Takeda, Susono, Japan, assignor to Toyota Jidosha Kogyo Kabushiki Kaisha, Toyota, Japan
Continuation-in-part of Ser. No. 8,234, Feb. 1, 1979, abandoned, which is a continuation of Ser. No. 849,354, Nov. 7, 1977, abandoned. This application Jan. 30, 1980, Ser. No. 116,754
Claims priority, application Japan, May 13, 1977, 52-054203; Fed. Rep. of Germany, Jan. 3, 1978, 2800190
Int. Cl.³ F01N *3/15*
U.S. Cl. 60—290 **3 Claims**

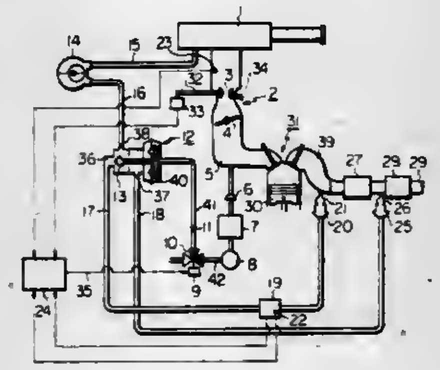

1. A secondary air control system in an internal combustion engine comprising:
an exhaust gas purifying device mounted on an exhaust pipe;
a secondary air control valve which comprises a diaphragm actuated by vacuum pressure for controlling secondary supply air to said exhaust gas purifying device;
a solenoid valve for controlling said vacuum pressure which acts upon said secondary air control valve;
a vacuum sensor which detects the vacuum pressure at a small venturi of a carburetor;
a thermo-sensor for detecting the intake air temperature;
an air flow meter mounted on a secondary air supply pipe;
a thermo-sensor for detecting the secondary air temperature mounted on said secondary air supply pipe, and;
a computer to which said vacuum sensor, said thermo-sensors, and said air flow meter are connected so as to feed input signals thereto, said solenoid valve being connected to the output of said computer so as to control the secondary air quanitity in response to said input signals.

4,299,090
INTERNAL COMBUSTION ENGINE WITH AT LEAST TWO EXHAUST GAS TURBOCHARGERS
Herbert Deutschmann, Friedrichshafen, Fed. Rep. of Germany, assignor to Motoren-und- Turbinen-Union Friedrichshafen GmbH, Friedrichshafen, Fed. Rep. of Germany
Filed Oct. 19, 1979, Ser. No. 86,418
Claims priority, application Fed. Rep. of Germany, Mar. 24, 1979, 2911727
Int. Cl.³ F02B *37/00*
U.S. Cl. 60—612 **9 Claims**

1. A cylinder-piston internal combustion engine which includes two exhaust gas turbocharger means arranged in parallel for both supplying the cylinder of the internal combustion engine with charging air when there is a large supply of exhaust gases, each exhaust gas turbocharger means including an exhaust gas turbine for driving a charging air compressor means, and means for switching off at least one of the exhaust gas turbocharger means when only a small amount of exhaust gas is available so as to increase a pressure of the charging air, characterized in that a check valve means is disposed in a suction line of the compressor means of the exhaust gas turbocharger means which can be switched off for allowing a flow of air in the suction line in a direction of the compressor means but preventing a flow of air in an opposite direction, said check valve means being adapted to be automatically opened and

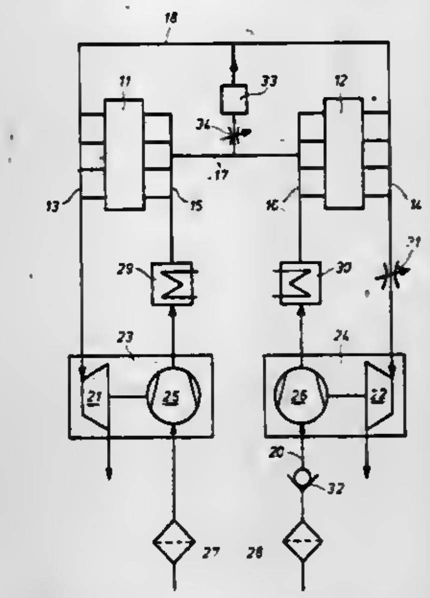

closed by a suction effect of the compressor means of the exhaust gas turbocharger means which can be switched off, and in that means are provided for communicating the exhaust gas turbocharger means which can be switched off with the remaining exhaust gas turbocharger means so that a pressure produced by the compressor means of the remaining exhaust gas turbocharger means acts on both a pressure and suction side of the compressor means of the exhaust gas turbocharger means which can be switched off.

4,299,091
PORTABLE CRYOGENIC LIQUID STORAGE-GAS SUPPLY SYSTEM
William J. Carter, and Lester K. Eigenbrod, both of Indianapolis, Ind., assignors to Union Carbide Corporation, New York, N.Y.
Filed Oct. 8, 1980, Ser. No. 195,130
Int. Cl.³ F17C *7/02*
U.S. Cl. 62—50 **3 Claims**

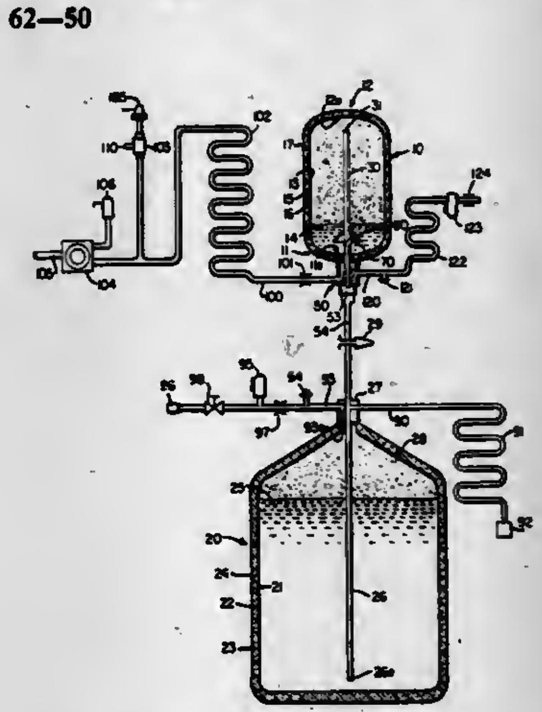

1. A cryogenic liquid storage-gas supply system including a double-walled cryogenic liquid storage container having top and bottom ends and being invertible between top-up dispensing and bottom-up filling positions, said container comprising:
(i) an inner wall forming an enclosed volume for receiving a cryogenic liquid;
(ii) an outer wall substantially coextensive with and spaced from said inner wall arranged and constructed with respect to said inner wall so as to form an evacuable space therebetween;
(iii) thermal insulation material disposed within said evacuable space;
(iv) liquid withdrawal-gas vent conduit means including a continuous tube penetrating and gas tightly joined to said inner and outer walls at the container top end said tube having a first end terminating near the enclosed volume bottom end and a second end terminating outside the container top end;
(v) gas vent-liquid fill conduit means including a tube positioned within said liquid withdrawal-gas vent tube and penetrating the wall of said liquid withdrawal-gas vent tube at a position located near the enclosed volume top end and extending through the second end of said liquid withdrawal-gas vent tube, said gas vent-liquid fill tube having a first end terminating near the enclosed volume top end and oriented to discharge a fluid directed away from said container top end and a second end terminating outside the container top end;
(vi) means within said enclosed volume external to said liquid withdrawal-gas vent tube for deflecting the fluid discharged from said first end of said gas vent-liquid fill tube toward the container top end.

4,299,092
ENERGY CONSERVING REFRIGERATED MERCHANDISER DISPLAY CASE
Fayez F. Ibrahim, Niles, Mich., assignor to Tyler Refrigeration Corporation, Niles, Mich.
Continuation-in-part of Ser. No. 145,712, May 1, 1980, said Ser. No. 141,359, said Ser. No. 141,360, each is a continuation-in-part of Ser. No. 101,069, Dec. 7, 1979, Pat. No. 4,265,090. This application Jul. 11, 1980, Ser. No. 167,727
Int. Cl.³ F25B *41/00;* **A47F** *3/04;* **F25D** *23/02*
U.S. Cl. 62—81 **61 Claims**

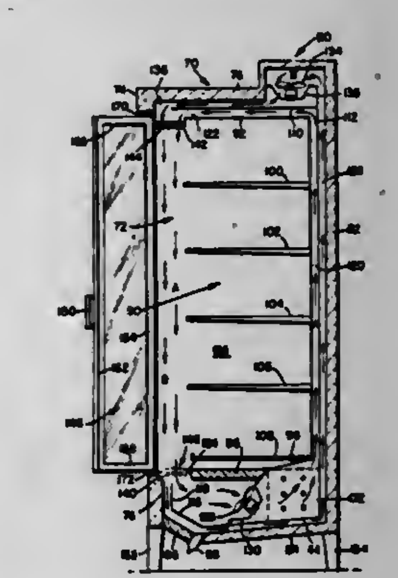

53. A method of operating a refrigerated display cabinet comprising a cabinet having a display space therein, an aperture means in at least one wall thereof, the aperture means including an access opening for permitting products to be moved into and out of the display space, a first air circulating means for moving a primary air band within the cabinet about the display space and into contact with a refrigeration means during a refrigeration cycle, covering means for the aperture means including at least one barrier door for substantially covering a portion of the access opening, a first air band conduit arranged about the display space for containing the primary air band, the first air conduit arranged to establish a refrigerated primary air band along a path inside of the barrier

door, and a second air band conduit arranged about the first air conduit for containing a secondary air band, the second air conduit arranged to establish a secondary guard air band curtain along a path contiguous to and outside of the primary air band, a second air circulating means for moving the secondary air band, and actuating means for controlling operation of the secondary air circulating means; the method comprising the steps of:

operating the first air circulating means to establish a refrigerated primary air band during a refrigeration cycle of operation, operating the second air circulating means through the actuating means responsive to the opening of the barrier door to establish a secondary guard air band curtain outside of the primary air band in order to protect the primary air band from contact with ambient air when the barrier door is opened.

4,299,093

ABSORBERS USED IN ABSORPTION HEAT PUMPS AND REFRIGERATORS

Georges Cohen, Le Pecq, and Alexandre Rojey, Garches, both of France, assignors to Institut Francais du Petrole, Rueil-Malmaison, France

Filed Sep. 28, 1979, Ser. No. 79,730
Claims priority, application France, Sep. 28, 1978, 78 28170
Int. Cl.³ F25B *15/00*
U.S. Cl. 62—101 **14 Claims**

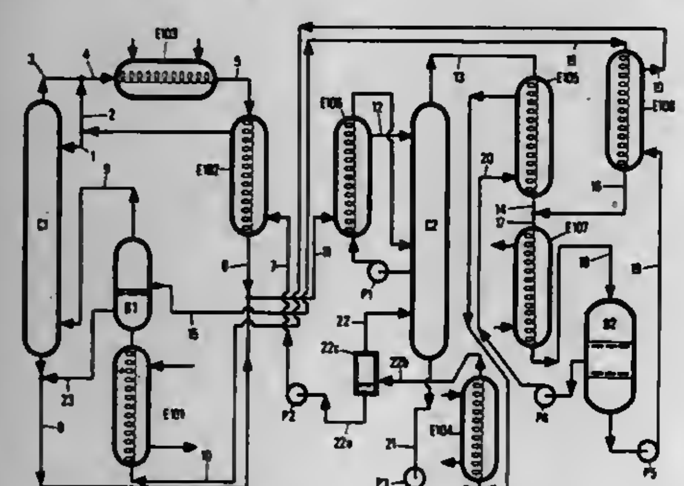

1. In a process for operating an absorption heat conversion system of the type comprising an evaporator, a countercurrent absorber, a desorber, a first condenser, and a second condenser, all interconnected for providing the heat conversion, and heating means for supplying heat to the desorber and to the evaporator, receiving means for receiving heat from the first condenser and the second condenser, insulation means for limiting heat loss from the absorber to the exterior and for recovering at least a portion of the heat of the fluids discharged from the absorber, a solvent phase circuit including circulating means for circulating the solvent phase from the desorber to the absorber, a solute circuit including solute circulating means for circulating the solute phase from the desorber to the absorber through the first condenser and the evaporator, a circuit including solution circulation means for circulating absorption solution from the absorber to the desorber, solvent circulation means for circulating the solvent phase in countercurrent contact with the solute phase in the countercurrent absorber to thereby form a vapor phase and an absorption solution, temperature control means for maintaining a higher temperature at the discharge point for the vapor phase from the absorber than at the discharge point for the absorption solution, discharge means for separately discharging the vapor phase and the absorption solution from the countercurrent absorber, and a circuit including vapor phase circulating means for circulating the vapor phase discharged from the countercurrent absorber to the desorber through the second condenser, an improvement in said process comprising the steps of:

separating the solvent phase from the desorber into at least a first fraction (L_1) and a second fraction (L_2) prior to feeding into the absorber;

feeding only said first fraction (L_1) of the solvent phase into the absorber;

mixing said second fraction (L_2) of the solvent phase with the vapor phase discharged from the absorber to form a resultant mixture; and

circulating said resultant mixture through the second condenser to the desorber.

4,299,094

CONTROLLER FOR A VEHICULAR AIR CONDITIONER

Chester F. Lummen, 5017 Waterbury Way, Fair Oaks, Calif. 95628

Filed Mar. 10, 1980, Ser. No. 129,104
Int. Cl.³ B60H *3/04;* **H01H** *29/28*
U.S. Cl. 62—133 **5 Claims**

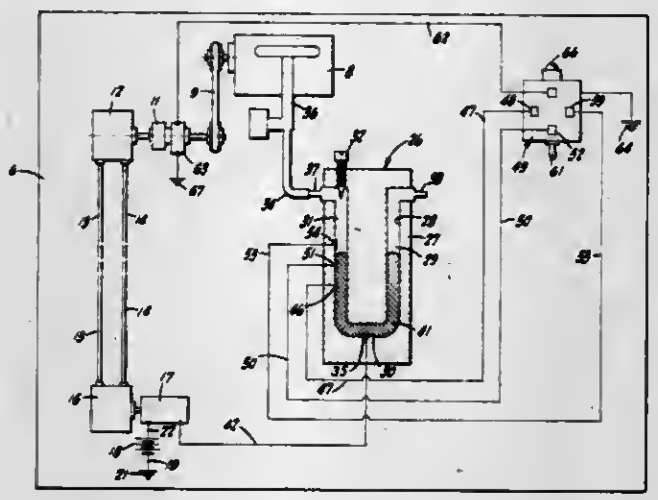

1. In a vehicle having a propelling engine with an intake manifold and driving an air conditioner:

a. an electrically controlled clutch for coupling and uncoupling the propelling engine and the air conditioner;
b. an electrical switch for controlling said clutch, said switch including a U-tube having first and second legs disposed in a common, upright plane;
c. means for mounting said U-tube on said vehicle with said plane in upright attitude;
d. a mercury body in both legs of said U-tube;
e. first and second electrical connections available to said mercury body,
one of said electrical connections having a plurality of leads going to vertically spaced contacts available to said mercury body therein, said one of said electrical connections including a plurality ot terminals connected to said clutch and a selector switch including means for connecting any selected one of said contacts with any selected one of said terminals;
the other of said electrical connections having a lead extending from a power supply to a contact available to said mercury body; and,
f. means for making said electrical connections effective on said electrically controlled clutch.

4,299,095

DEFROST SYSTEM

A. Victor Cassarino, Newington, Conn., assignor to Robertshaw Controls Company, Richmond, Va.

Filed Aug. 13, 1979, Ser. No. 66,349
Int. Cl.³ F25D *21/06;* **G05D** *23/32*
U.S. Cl. 62—155 **6 Claims**

1. A system for defrosting a refrigeration unit wherein heat is exchanged between refrigerant in a heat exchange means and a stream of air directed over said heat exchange means comprising:

means for sensing a determined temperature of said heat exchange means and providing a temperature signal representative thereof;

means for sensing a determined change in pressure in said stream of air over said heat exchange means caused by frost thereon and providing a pressure signal representative thereof;

means for heating said heat exchange means to melt frost thereon defrosting same;

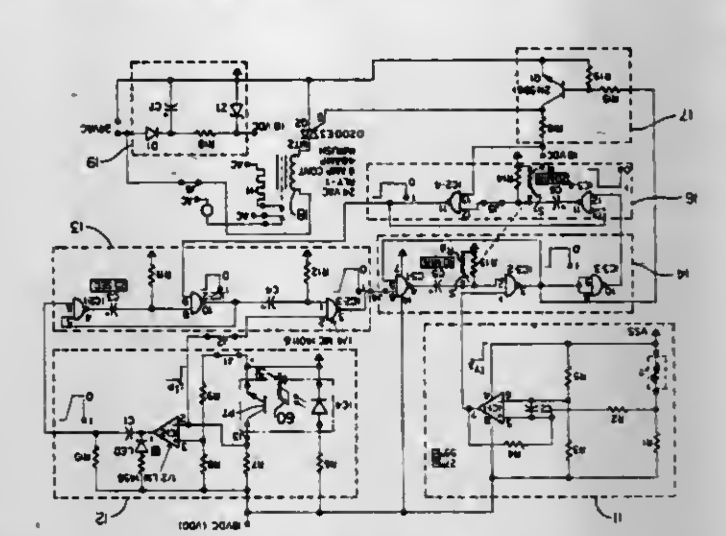

and timing means for actuating said heating means thereby initiating a defrost cycle only upon the simultaneous occurrence of said temperature and pressure signals for a determined interval and for thereafter terminating said defrost cycle upon the lapse of a determined interval or upon a determined change in said temperature signal whichever condition occurs first.

4,299,096

DEVICE FOR OVERRIDING A TIME SWITCH OF AN AIR CONDITIONING SYSTEM

James G. Van Camp, 3161 E. Tenaya, Fresno, Calif. 93710

Filed Nov. 21, 1980, Ser. No. 208,930
Int. Cl.³ F25B *29/00;* **F23N** *5/20*
U.S. Cl. 62—180 **8 Claims**

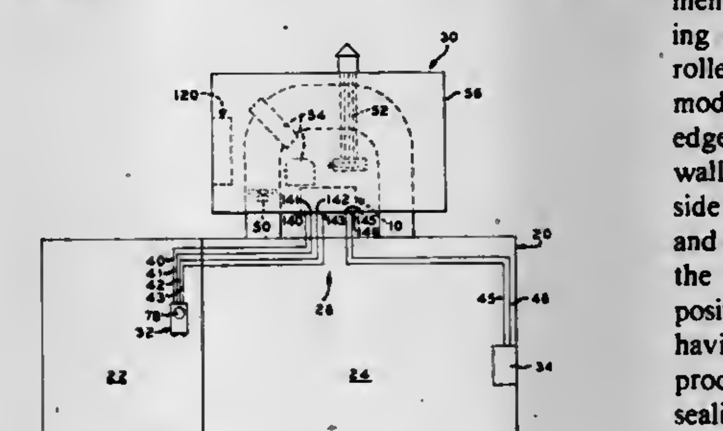

1. In combination with an air conditioning system characterized by a cyclically operable air conditioner unit and control means for controlling the operation of the unit including a thermostat remotely related to the unit and having a power supply circuit including a lead connecting the thermostat to the unit, a relay-actuated switch interposed in said lead adapted to close for facilitating application of power to said unit, a temperature responsive power supply switch connected with a normal operational source of power adapted to close for applying power to said lead, and timing means having a discontinuous mode of operation for periodically energizing said relay to close said relay-actuated switch for facilitating application of power to said unit, whereby a cycle of operation for said unit is facilitated, said power supply switch being adapted to close in response to temperature changes for applying operational power through said lead to said unit when said relay-actuated switch is closed for imposing a cycle of operation on said unit, timing means override apparatus mounted adjacent to said unit and interconnected with said lead of the power supply circuit and adapted to facilitate a cycle of operation for said unit in response to an opening and closing of said power supply switch.

4,299,097

VANE TYPE COMPRESSOR EMPLOYING ELLIPTICAL-CIRCULAR PROFILE

Wayne C. Shank, Tucson, Ariz., and Thomas C. Edwards, Cocoa Beach, Fla., assignors to The Rovac Corporation, Rockledge, Fla.

Filed Jun. 16, 1980, Ser. No. 157,564
Int. Cl.³ F03C *2/00;* **F25B** *1/00*
U.S. Cl. 62—229 **5 Claims**

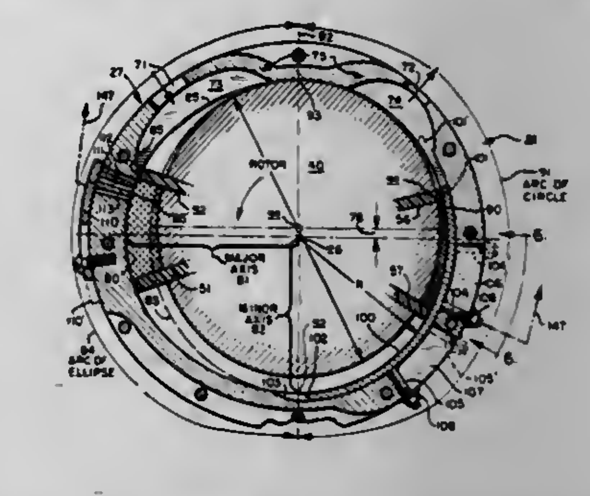

1. A rotary compressor comprising in combination a housing defining a chamber having opposed parallel end walls and a curved smoothly continuous outer wall centered about a chamber axis, the outer wall having a reference region defining inlet and outlet sides of the chamber, a rotor of cylindrical shape having a plurality of equally spaced radial grooves formed therein and having a shaft for supporting the same for rotation in the housing, vanes profiled to fit the chamber and radially slidable in the grooves to define enclosed compartments between them, each vane having a pair of axially extending stubshafts having rollers respectively mounted thereon, roller tracks formed in the end walls of the chamber for accommodating the rollers and for guiding the vanes so that the outer edges of the vanes follow in closely spaced proximity the outer wall of the chamber, means defining an inlet port on the inlet side of the chamber for aspiration of gas into a compartment and an outlet port on the outlet side for discharging gas from the compartment in the compressed state, the ports being positioned to closely straddle the reference region, the rotor having its axis laterally offset from the chamber axis so as to produce engagement of the rotor at the reference region for sealing between the ports, the curved wall of the chamber on the inlet side being of substantially elliptical profile with the major axis of the ellipse generally centered on the inlet side and with the inlet port extending to a point of cut-off short of the major axis while the curved wall on the outlet side is substantially circular in profile so that gas entering the inlet port is charged in a compartment between a pair of vanes at the major elliptical axis and progressively compressed over an arc of compression greater than about 180 degrees.

4,299,098

REFRIGERATION CIRCUIT FOR HEAT PUMP WATER HEATER AND CONTROL THEREFOR

Gregory S. Derosier, Holmen, Wis., assignor to The Trane Company, La Crosse, Wis.

Filed Jul. 10, 1980, Ser. No. 167,576
Int. Cl.³ F25B *27/02, 13/00*
U.S. Cl. 62—238.6 **12 Claims**

11. A refrigeration circuit comprising

a. compressor means for compressing a refrigerant vapor and having a suction port and a discharge port;
b. indoor heat exchange means for transferring heat between refrigerant and a space, and having first and second refrigerant flow connections;
c. outdoor heat exchange means for transferring heat between refrigerant and a heat sink, and having first and second refrigerant flow connections;
d. liquid heat exchange means for transferring heat from refrigerant to a liquid, and having first and second refrigerant flow connections;
e. first and second four-way valves, each having first, second, third, and fourth ports, and a selectively positionable valve member for providing communication between said first and second ports and between said third and fourth ports when in a first position; and between said second and third ports and between said first and fourth ports when in a second position;
f. vapor conduit means providing communication between

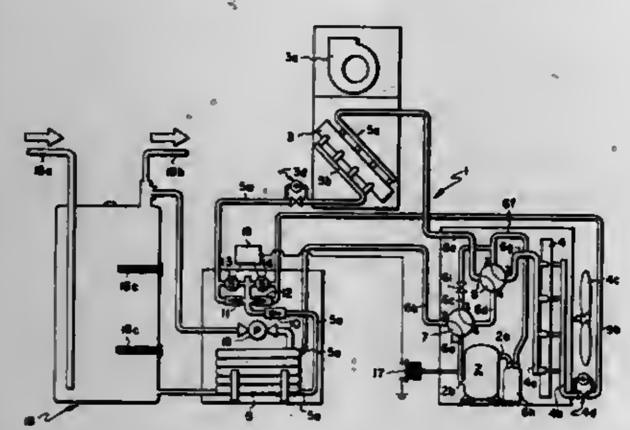

i. the discharge port of said compressor means and the first port of said first four-way valve;
ii. the second port of said first four-way valve and the first flow connection of said liquid heat exchange means;
iii. the third port of said first four-way valve and the suction port of said compressor means;
iv. the fourth port of said first four-way valve and the fourth port of said second four-way valve;
v. the first port of said second four-way valve and the first flow connection of said in
vi. the second port of said second four-way valve and the suction port of said compressor means; and
vii. the third port of said second four-way valve and the first flow connection of said outdoor heat exchange means; and
f. liquid conduit means including second valve means interconnecting the second flow connections of said indoor, outdoor, and liquid heat exchange means.

4,299,099
OPEN FRONT REFRIGERATION SYSTEM

James E. Myers; Tom E. Kennedy, both of Niles, and Arthur Perey, Buchanan, all of Mich., assignors to Tyler Refrigeration Corporation, Niles, Mich.

Filed Jan. 24, 1979, Ser. No. 6,074
Int. Cl.³ A47F *3/04*

U.S. Cl. 62—256 4 Claims

1. A refrigeration system adapted to be loaded from the rear comprising:
a display case having an open front for allowing access thereto and being capable of having a plurality of shelves arranged therein;
a rear storage case arranged behind said display case and allowing for access to the shelves arranged within said display case;
cooling means arranged along the top of said refrigeration system and including first means for refrigerating said storage case, second means for refrigerating said display case, and first air circulating means for drawing air from said storage case and supplying such air to both said first and second refrigerating means;
said first refrigerating means including a first set of refrigerating coils and said second refrigerating means including a second set of refrigerating coils and said first and second sets of refrigerating coils being arranged adjacent to each other and extending in a vertical direction and said first air circulating means is arranged in juxtaposition with said first and second sets of refrigerating coils;
first air passage means arranged for receiving air passing through said first refrigerating means and carrying refrigerated air therefrom to said storage case;
means for establishing a primary air curtain, said primary air curtain extending substantially vertically across the opening in said display case;
second air passage means arranged for receiving air passing

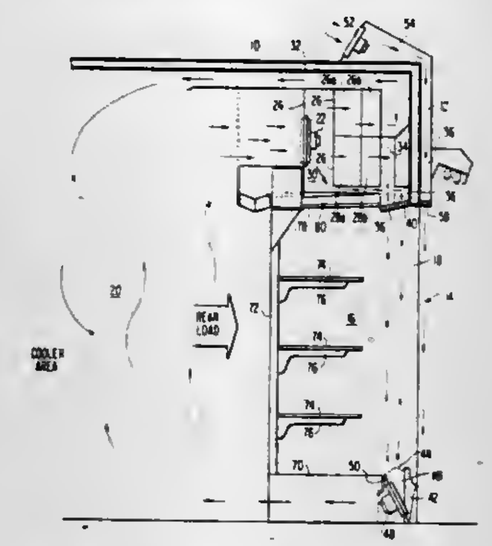

through said second refrigerating means and carrying refrigerated air therefrom to said means for establishing said primary air curtain;
means for establishing a secondary air curtain, said secondary air curtain extending substantially vertically across the opening in said display case along a path positioned towards the outside of said display case with respect to said primary air curtain, said means for establishing said secondary air curtain includes a third air circulating means for drawing air from said storage case and directing such air along a path for forming said secondary air curtain;
third air passage means arranged along the bottom of said display case for receiving air from said primary and secondary air curtains; and
second air circulating means for propelling air received from said primary and secondary curtains along said third air passage means into said storage case.

4,299,100
REFRIGERATABLE BEVERAGE CONTAINER HOLDER

Thomas L. Crisman; Stanley R. Moore, and Harry R. Weaver, all of Dallas, Tex., assignors to Freezesleeves of America, Inc., Dallas, Tex.

Filed Mar. 24, 1980, Ser. No. 133,452
Int. Cl.³ F25D *3/08*

U.S. Cl. 62—457 10 Claims

1. An improved refrigerated holder for a beverage container of the type including a cylindrical outer cup of insulative foam material closed on one end and open on the other, a cylindrical inner cup positioned within said outer cup with a height less than that of the outer cup, an outer diameter less than the inner diameter of the outer cup to define an annular space therebetween and an inner diameter for receiving the cylindrical walls of a beverage container therein, said inner cup also including a radially extending flange at the open end for positioning near the open end of the outer cup to close the annular space, and a freezeable fluid positioned within the annular space between the inner walls of the outer cup and the outer walls of the inner cup for absorbing heat from the walls of a beverage container positioned within the inner cup when the fluid is frozen to cool the beverage within the container; the improvement comprising:

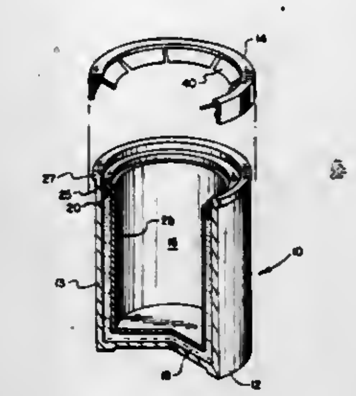

a sharp circumferential edge region formed on the outer periphery of the radially extending flange of the inner cup having a diameter greater than that of the inner diameter of the outer cup to be embedded in the foam wall of the outer cup and effect a sealing of the annular fluid containing space.

4,299,101
EARRING

Alvin Block, Bedford, N.Y., assignor to Intimate Jewels, Inc., Katonah, N.Y.

Continuation-in-part of Ser. No. 875,246, Feb. 6, 1978, abandoned, Ser. No. 908,059, May 22, 1978, Pat. No. 4,170,118, Ser. No. 32,652, Apr. 23, 1979, Pat. No. 4,236,385, and Ser. No. 73,625, Sep. 10, 1979, Pat. No. 4,245,484, said Ser. No. 908,059, is a continuation-in-part of Ser. No. 875,246, said Ser. No. 32,652, is a continuation of Ser. No. 875,246, said Ser. No. 73,625, is a continuation-in-part of Ser. No. 908,059, and Ser. No. 32,652.. This application Jul. 18, 1980, Ser. No. 169,997
The portion of the term of this patent subsequent to Oct. 9, 1996, has been disclaimed.
Int. Cl.³ A44C *7/00*

U.S. Cl. 63—12 22 Claims

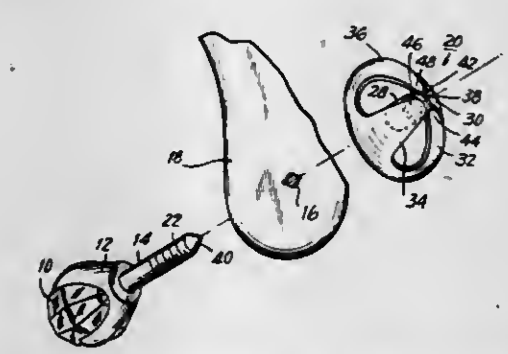

1. An earring for pierced ears which comprises an ornament in a setting, a rectilinear cylindrical post extending from said ornament setting, at least a portion of the outer surface of said post having a helical threading, and a clutch, said clutch having a central disc-shaped base portion having a substantially circular central opening and an outer perimeter, a plurality of spaced-apart curved springy fingers, said curved springy fingers extending radially from terminal tips defining an opening, to a curved attachment to the substantially circular outer perimeter of said base portion, so that said clutch is substantially conical, and a cylindrical sleeve, said sleeve depending from said central opening in said base portion towards said terminal tips of said fingers, so as to guide said post towards the opening in the clutch defined by said terminal tips of said curved springy fingers, said clutch being engageable by said post by extending said post axially through the central opening in said base portion and through said sleeve, and then through the opening defined by the terminal tips of said fingers, whereby the tips of said fingers pass over the convolutions of the threading, and so that said clutch cannot be disengaged from said post by reverse axial movement but may be disengaged from said post only by rotating said clutch to slide the tips of said fingers along the convolutions of the helical threading of said post, whereby said clutch is unscrewed off of said post, the circular central opening and the substantially circular perimeter of the base portion of said clutch being concentric, and the central opening defined by the terminal tips of said fingers being coaxial with both the circular central opening of the base portion of said clutch and said sleeve.

4,299,102
LOCKING FUEL CAP WITH PLASTIC MECHANISM

Ernesto Aro, Torrance, Calif., assignor to Orion Industries, Inc., Compton, Calif.

Filed Dec. 3, 1979, Ser. No. 99,538
Int. Cl.³ B65D *55/14*

U.S. Cl. 70—165 8 Claims

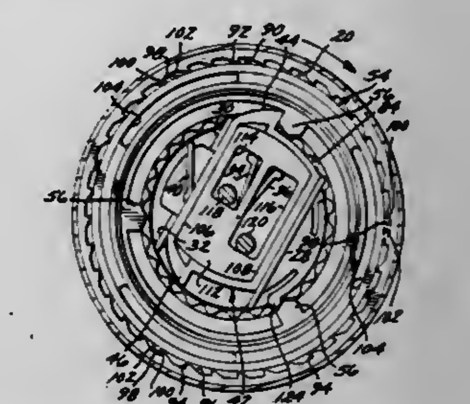

6. A locking fuel tank cap comprising:
a hollow central unitary plastic core externally threaded at one end for mating engagement with a corresponding internally threaded fuel tank inlet pipe, and having a radially outwardly directed circumferential sealing lip at the other end, and said core defines a central axial recess with inner and outer annular transversely disposed races located within said lip,
a bonnet for providing a hand grip and positioned to coaxially encircle said sealing lip of said central core,
means for securing said bonnet against axial movement relative to said core,
a unitary transverse plastic frame rotatably supported by said inner race and including a resilient detent catch, a pair of smooth, elastically resilient transverse cantilevered arms joined at proximately located bases on said frame and extending radially inwardly from said frame to define a narrow gap therebetween which widens to a mouth at the cantilevered extremities thereof,
a unitary plastic bolt reciprocally movable relative to said frame along said gap and having diametrically opposite lugs facing in opposite clockwise and counterclockwise directions, and having a stud depending into said gap between said cantilevered arms, and a plurality of recesses that receive said detent catch when said bolt is moved along said track, whereby said stud forces said cantilevered arms apart when moved toward said bases thereof, and the countervailing elasticity of said arms tends to force said guide stud toward said mouth, thereby pushing said bolt away from said bases of said arms, and said detent catch coacts with said recesses in said bolt to resist the force of said arms,
a transverse track to restrict movement of said bolt to a longitudinal path along said gap,
a locking mechanism actuable for moving said bolt along said track, and
a latching ring mounted in said outer race and having at least one radially inwardly directed tooth which is engagable by opposite ones of said lugs of said bolt moving in opposite directions of rotation, and said latching ring is engageable with said core in torque limiting fashion when rotated in a direction to tighten said core onto said fuel tank inlet pipe.

4,299,103
ROLLING MILL

Hans-Friedrich Marten, Kreuztal, Fed. Rep. of Germany, assignor to Schloemann-Siemag Akt., Düsseldorf, Fed. Rep. of Germany

Filed Feb. 28, 1979, Ser. No. 16,098

Claims priority, application Fed. Rep. of Germany, Mar. 2, 1978, 280888

Int. Cl.³ B21B *37/02, 1/28*

U.S. Cl. 72—16 **14 Claims**

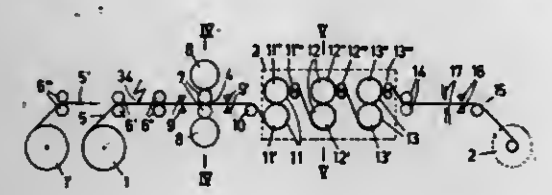

1. Method of rolling a metal strip in a rolling mill having a 4-high roll stand with an adjustable roll gap and a thrust-rolling stand, comprising at least one pair of combined rolls, said method comprising the steps of:
 (a) advancing the strip through the roll gap in the 4-high roll stand and the pair of combined rolls in the thrust-rolling stand so that the strip extends around the outside of one roll, between the pair of rolls and around the outside of the other roll, wherein the strip partially surrounds each roll of the pair,
 (b) rotating the rolls of the pair of combined rolls in opposite directions, and
 (c) maintaining a pre-determined circumferential speed differential ratio between the individual rolls of the pair of combined rolls for achieving a fixed percentage thickness reduction of the strip by the pair of rolls, and
 (d) reducing the strip as it passes through the 4-high roll stand to a predetermined thickness.

4,299,104
METHOD OF CONTROLLING ROLL ECCENTRICITY OF ROLLING MILL AND APPARATUS FOR PERFORMING THE SAME METHOD

Yasunobu Hayama; Kuniaki Tanouchi; Mitsuhiro Abe, and Katsuhiro Ohkura, all of Hiroshima, Japan, assignors to Mitsubishi Jukogyo Kabushiki Kaisha, Tokyo, Japan

Filed Feb. 21, 1980, Ser. No. 123,415

Claims priority, application Japan, Feb. 28, 1979, 54/23161

Int. Cl.³ B21B *37/08*

U.S. Cl. 72—20 **5 Claims**

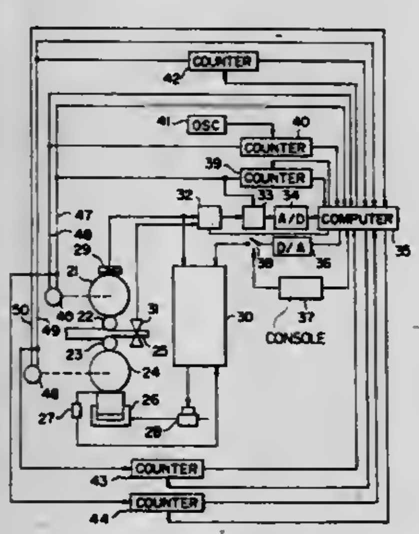

1. A method of controlling roll eccentricity of a rolling mill comprising the steps of obtaining, as a first roll eccentricity compensation signal, a rolling load variation signal due to eccentricity of backup rolls by removing a rolling load variation component due to a variation of thickness of a sheet material to be rolled from a rolling load variation signal detected during a rolling operation, obtaining a rolling load variation signal due to eccentricity of the backup rolls when the latter are made in contact with each other and rotated under a load, memorizing the latter rolling load variation signal as a second roll eccentricity compensation signal, obtaining a final roll eccentricity compensation signal for the rolling mill by multiplying the first roll eccentricity compensation signal with a constant larger than 0 and smaller than 1, multiplying the second roll eccentricity compensation signal with another constant larger than 0 and smaller than 1 and adding the results of the multiplications, and controlling the rolling mill with the final roll eccentricity compensation signal.

4,299,105
FORMING PERMANENT BENDS IN CONVOLUTED REINFORCED FLEXIBLE TUBING

Barrie F. Whitworth, Lower Green House, Green La., Hove Edge, Brighouse, West Yorkshire, HD6 2PT, England

Filed Sep. 27, 1979, Ser. No. 79,404

Claims priority, application United Kingdom, Sep. 28, 1978, 38515/78

Int. Cl.³ B21D *22/10*

U.S. Cl. 72—54 **6 Claims**

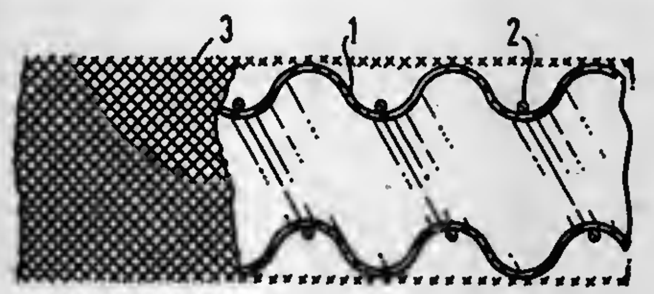

1. A method of forming a permanent curve in a length of convoluted flexible plastic tube having an outer wire-reinforcement and an inner convoluted surface, the method comprising the steps of:
 initially flexing the chosen region of the tube to a curve whose radius is tighter than that eventually desired;
 forcibly holding said region of the tube in said tighter than desired curve;
 thereafter applying directly to the inner convoluted surface of the flexed and held tube an internal fluid pressure which is insufficient to burst the tube but which is high enough to strain the wire-reinforcement in the bend region beyond its elastic limit;
 maintaining said internal pressure for a finite period of time;
 releasing the pressure;
 and finally releasing the tube from its preheld curve.

4,299,106
FINNED TUBING

Donald Hague, Germiston, South Africa, assignor to Heat Exchangers Africa Limited, Johannesburg, South Africa

Filed Mar. 7, 1979, Ser. No. 18,219

Claims priority, application South Africa, Sep. 22, 1978, 78/5390

Int. Cl.³ B21H *3/12*

U.S. Cl. 72—78 **26 Claims**

1. A method of manufacturing finned tubing from tubular metal fin stock which includes providing the fin stock in axially continuous form and providing on the fin stock at least two finned regions and at least one finless region interposed between two finned regions, the method including employing a plurality of rollers drivably mounted on arbors spaced about the tubular fin stock, each of the rollers including a plurality of axially arranged forming discs and the rotational axis of each arbor intersecting the longitudinal axis of the fin stock, the method including effecting relative rotation one direction of the discs with respect to the tubular fin stock, bringing the discs into rolling contact with the tubular fin stock at a position intermediate the ends of the fin stock and developing a helical fin extending over a finite axial distance of the fin stock, arresting the rotation of the discs and reversing the direction of rotation of the forming discs so that the axial displacement of

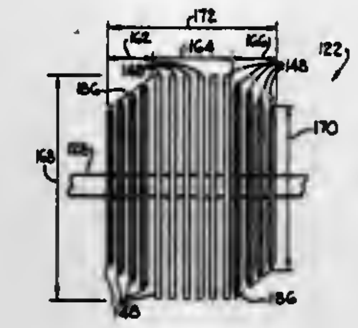

the fin stock is thereby reversed, and the method further including developing the fin in a finned region to its full height over an axial distance of the fin stock equal to from 0.40 to 0.75 of the outside diameter of the fully developed fin.

4,299,107
DEVICE FOR FORMING A COLLAR AROUND A HOLE IN THE WALL OF A PIPE

Hardy R. Hällström, Turku, Finland, assignor to G. A. Serlachius Oy, Finland

Filed Oct. 3, 1979, Ser. No. 81,394

Claims priority, application Finland, Oct. 11, 1978, 783102

Int. Cl.³ B21D *51/40*

U.S. Cl. 72—120 **13 Claims**

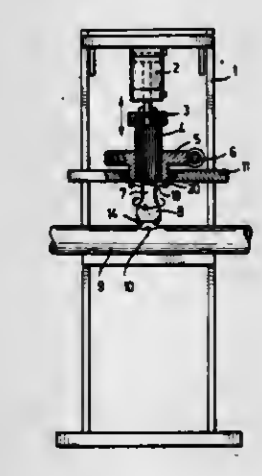

1. A device for forming a collar around a hole in the wall of a pipe, comprising a rotary shaft, a body secured to one end thereof, said shaft having at the other end a free end, collaring means supported on the body and rotating therewith around a rotary axis, and a driving means for moving the collaring means in a motion having an action radius such that said action radius will increase as they are moved from an inserting position to a collaring position, the said body being in a plane including said rotary axis provided with outwardly curved support surfaces extending to a collar forming point, the radial distances of said support surfaces from the rotary axis being biggest in the area between the end parts of each said support surface, and said collaring means, which are elongated in a direction of curvature, being arranged for movement along said support surfaces in the plane of said rotary axis such that during the collaring operation a reaction force component acting in the plane of the rotary axis without a friction force component between said collaring means and said support surface is directed approximately perpendicularly to said support surface.

4,299,108
CAGE-ROLL UNIT FOR METAL PIPE FORMING

Masashi Kato; Hirozo Obata; Minoru Hirata, all of Kitakyushu; Hitoshi Matsukuma; Kunio Ishikawa, both of Hikari, and Junichi Tanaka, Kitakyushu, all of Japan, assignors to Nippon Steel Corporation, Tokyo, Japan

Filed Sep. 6, 1979, Ser. No. 72,844

Claims priority, application Japan, Sep. 12, 1978, 53-124323[U]

Int. Cl.³ B21D *5/08, 51/00, 39/00*

U.S. Cl. 72—178 **6 Claims**

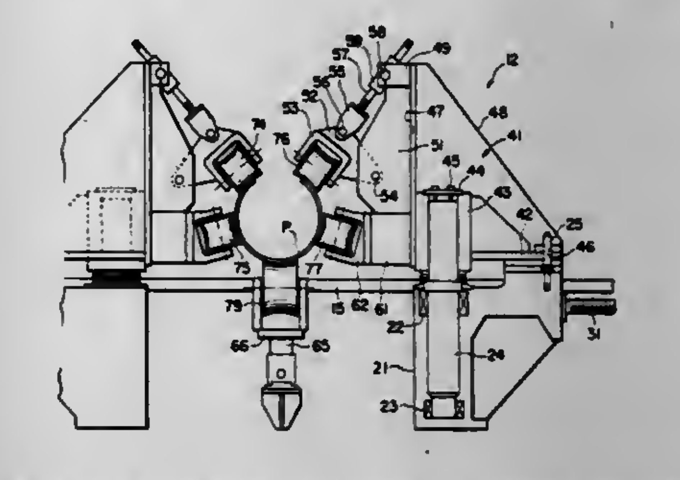

1. A cage roll unit for use in a metal pipe forming mill train for progressively forming a flat metal sheet into a round form along a mill line extending along the mill train by means of forming rolls, said cage roll unit comprising:
 a cross rail extending perpendicular to the mill line;
 a pair of movable bases slidably supported on said cross rail so as to be slidable therealong, one on each side of the mill line;
 driving mechanisms connected to said bases for moving said bases back and forth along said cross rail;
 a pair of stands, one mounted on each movable base;
 at least two pairs of cage rolls rotatably mounted on said stands and facing said mill line and defining a pass for the metal sheet being formed, one pair on each side of said mill line, each pair having an upper and a lower cage roll, the corresponding cage rolls on each stand being opposed to each other, said lower cage rolls having a curved profile opening upwardly and inwardly toward the center of the pass and the upper cage rolls having a curved profile opening downwardly and inwardly toward the center of the pass, at least the upper cage rolls being mounted on said stands for pivoting movement about an axis parallel to said mill line for adjusting the position of said upper cage rolls relative to the center of the pass; and
 a support roll rotatably disposed between the stands for supporting the metal sheet being formed from below.

4,299,109
ROLLING MILL WITH LOOSELY SLEEVED ROLL

Hiromi Matsumoto, Kitakyushu; Toshio Kikuma, Fukuoka; Koe Nakajima, Nakama, and Akira Ohnuki, Kutakyushu, all of Japan, assignors to Nippon Steel Corporation, Tokyo, Japan

Continuation of Ser. No. 12,195, Feb. 14, 1979, abandoned. This application Mar. 10, 1980, Ser. No. 128,924

Claims priority, application Japan, Feb. 18, 1978, 53-17961

Int. Cl.³ B21B *13/00, 27/00*

U.S. Cl. 72—241 **7 Claims**

1. In a rolling mill including at least one roll on which a sleeve is loosely positioned in such a way that the sleeve is revolvable and axially shiftable with respect to the outer circumferential surface of the barrel of the associated roll, said sleeved roll being subjected to a rolling load, directed to the sleeve center from one side of said sleeve on the barrel, the outer circumferential surface of said roll barrel being in contact with the inner surface of said sleeve along a narrow area substantially parallel to the roll axis, the improvement comprising at least one unit for supporting and guiding said sleeve, with a

restraining or a restricting point, at which a force for axially shifting or for restraining or restricting the spontaneous axial shifting of said sleeve is applied thereto, and being located

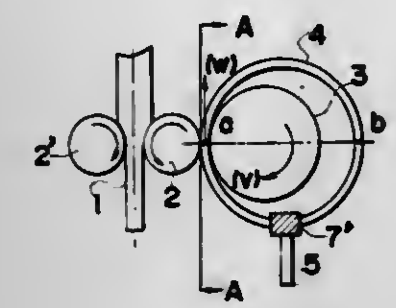

somewhere along the second half semicircular portion of said sleeve as viewed in the rotational direction of a complete turn of said sleeve ending at the loading point where said rolling load is received.

4,299,110
METHOD FOR FORMING A HOLE THROUGH A FORGED WORKPIECE
Wayne A. Martin, Pittsburgh, Pa., assignor to United States Steel Corporation, Pittsburgh, Pa.
Continuation-in-part of Ser. No. 892,715, Apr. 3, 1978, abandoned. This application Jun. 4, 1979, Ser. No. 45,529
Int. Cl.³ B21D *31/02*
U.S. Cl. 72—327 **7 Claims**

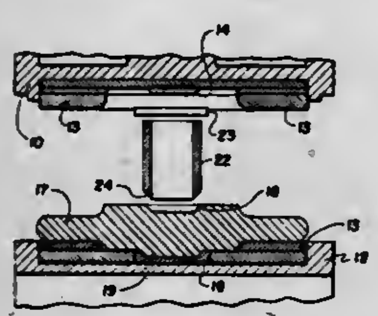

1. In a forging operation in which a heated workpiece is pressed between cooperating top and bottom dies, an improved method of forming a hole through the workpiece, said method comprising:
forming an indentation in the upper surface of the workpiece during the forging operation; and
using said top dies to force a tubular trepanning tool through the hot workpiece at said indentation before removing the workpiece from the press following the forging operation,
said tool having at least one sloping face extending around its circumference at its lower end, said indentation being formed with tapered internal circumferential edges which match the sloping face of said tool and are of substantially equal diameter to the tool diameter.

4,299,111
MOLDING OF SUPERPLASTIC METALS
James E. Fayal, Stonington, Conn., and Joseph A. Morrone, III, North Kingston, R.I., assignors to Greene Plastics Corporation, Hope Valley, R.I.
Filed Jun. 4, 1979, Ser. No. 45,306
Int. Cl.³ B21D *37/16*
U.S. Cl. 72—342 **5 Claims**
1. In a process for molding of a superplastic metal, wherein said metal is formed under heat and pressure in a mold into a molded article which article is thereupon removed from the mold, the improvement comprising the steps of
A. opening the mold, after the forming step is complete, to expose a portion of said article,
B. applying a cooling medium to said exposed portion of said article for a period sufficient to shrink said article to the extent there is a less tight relationship between walls of said article which are still within said mold and said mold, said cooling being terminated before said mold is itself substantially affected by said cooling,
C. impacting said article with means to overcome any retentive forces still existing between said mold and the said

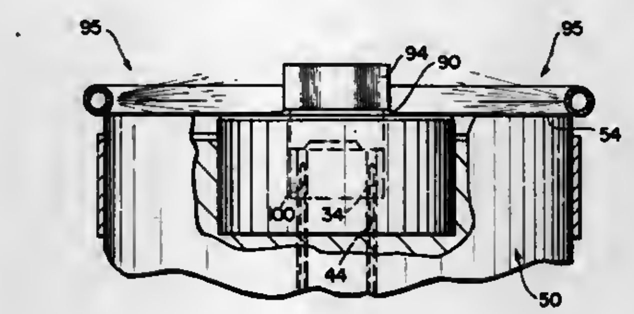

walls of said article which were left within said mold and knock said article out of said mold, said impact being at a velocity high enough to cause the impacted superplastic material to reach a yield strength of about 150,000 psi but which does not exceed the elastic limit of the superplastic material.

4,299,112
METHOD AND DEVICE FOR PRODUCING SYNCHRONIZER RING
Kazuyoshi Kondo, Okazaki, and Yoshiaki Nakamura, Tsu, both of Japan, assignors to Kabushiki Kaisha Wako, Tokyo, Japan Division of Ser. No. 843,886, Oct. 20, 1977. This application Oct. 13, 1978, Ser. No. 950,979
Int. Cl.³ B21D *45/02*
U.S. Cl. 72—354 **2 Claims**

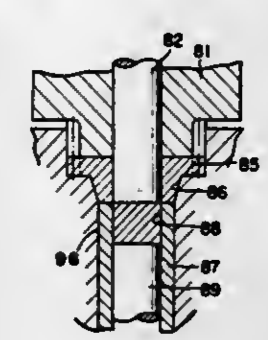

1. A method for producing a hollow synchronizer product having an axial hollow part, a flange part provided with peripheral gear teeth and a boss part: which comprises the steps of clamping a planar blank material between the under surface of a punch member supported slidably for vertical movement and the upper surface of a die member, said punch member being provided with an axial hole having a diameter equal to the inner diameter of the hollow part of the product, with a peripheral part having teeth corresponding to the gear teeth of the product, and with a mandrel slidable in said axial hole, and said die member being provided with a die hole having an inner contour consisting of a peripheral part having teeth corresponding to the gear teeth to be formed in the product's outer surface and a through hole corresponding to the boss part of the product, with another axial hole continued at its upper edge with the lower edge of said through hole, and with ejector means consisting of a hollow ejector and an auxiliary ejector of the mandrel type, said hollow ejector being a hollow cylinder provided with an axial bore having an inner diameter corresponding to outer diameter of the mandrel in the punch member and being slidably inserted into said another axial hole in the die member, the upper part of said axial hole in said hollow ejector forming another die hole cooperating with the mandrel in the punch member when the hollow part of the product is pierced, and said auxiliary ejector being slidably inserted in said axial hole of the hollow ejector; pressing together said punch member and said die member thereby press-forming the flange part and peripheral gear-teeth of the product, the press-forming of said flange part causing a flow of material of said flange part into said through hole of the die member; simultaneously with said pressing, projecting the mandrel of the punch member therefrom thereby to assist said flow of the blank material into said through hole of the die member and then to pierce the product together with the upper part of the axial hole of said hollow ejector so as to dispose a cut piece of scrap into the hollow part of the hollow ejector and thereby to form the internal hollow part, peripheral gear teeth, and boss part of the product; and then returning the punch member, die member, mandrel and ejector means while ejecting a product by the hollow ejector and the cut piece of the scrap by the auxiliary ejector from the die member.

4,299,113
APPARATUS FOR BENDING TUBES OR BARS AND MOTOR-PUMP UNIT THEREFOR
Giovanni Belotti, Agrate Brianza, Italy, assignor to L. ID. IT Lattoneria Idrotermica Italiano dei Fratelli Belotti, Milan, Italy
Filed Mar. 5, 1979, Ser. No. 17,300
Claims priority, application Italy, Apr. 24, 1978, 22652 A/78
Int. Cl.³ B21D *7/06*
U.S. Cl. 72—389 **8 Claims**

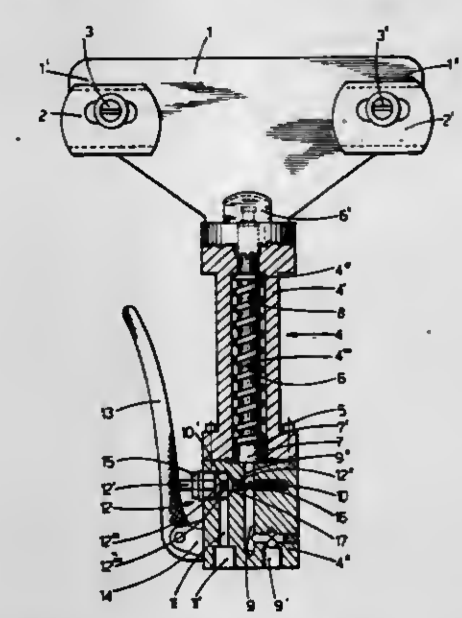

1. An apparatus for bending tubes or bars, comprising bearings for a tube to be curved or bent, a support carrying said bearings and having a handle extending therefrom with a bore therein enclosing an axially movable stem, means continuously circulating a fluid in a closed circuit through a passageway in the free end portion of said handle, a throttle member including an axially bored cylindrical outer portion having a through hole (12'''') therein and said outer portion (12'') including a valve stem for adjusting the pressure of such a fluid by adjustably varying the opening of said through hole (12''''), the resulting increase of pressure of said fluid as built up upstream of said throttling member being used for exerting an adjustable advancing pressure on the stem (6).

4,299,114
METHOD OF TESTING THE INTEGRITY OF AN ULTRASONIC SYSTEM FOR SENSING LIQUID-FLUID INTERFACES
David Silvermetz, Wantagh, and George L. Adams, Bayshore, both of N.Y., assignors to Envirotech Corporation, Menlo Park, Calif.
Filed Jun. 10, 1980, Ser. No. 158,109
Int. Cl.³ G01F *25/00;* **G01N** *29/00*
U.S. Cl. 73—1 H **10 Claims**
1. A method for testing the integrity of an ultrasonic system for sensing a liquid-fluid interface in a container, said system comprising:
(a) first and second crystals, each of said crystals having a relatively high resonant frequency and a relatively low resonant frequency;
(b) a support structure with first and second end arms connected by a cross member, said first crystal being bonded to said first end arm and said second crystal being bonded to said second end arm, said first and second crystals being positioned opposite each other across a gap between said first and second end arms in said container;
(c) means for selectively enabling said first crystal to resonate either at its relatively high resonant frequency or at its relatively low resonant frequency, said relatively high resonant frequency being sufficiently high to cause an ultrasonic signal to be transmitted into said gap without

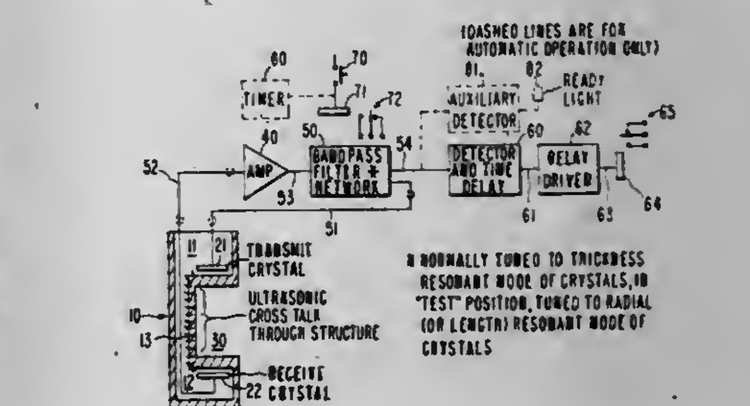

causing appreciable ultrasonic transmission through said cross portion of said support structure, said relatively low resonant frequency being sufficiently low to cause transmission of a detectable ultrasonic signal through said cross member; and
(d) means for detecting resonance induced in said second crystal due to resonance of said first crystal at either its relatively high resonance frequency or its relatively low resonance frequency;
said testing method comprising the steps of causing said first crystal to resonate at its relatively low resonant frequency irrespective of whether the liquid-fluid interface lies within said gap in order to cause ultrasonic transmission through said cross member, and detecting resonance in said second crystal at said relatively low resonant frequency, thereby indicating that the ultrasonic system is operational.

4,299,115
METHOD AND APPARATUS FOR ANALYSIS OF MEAT PRODUCTS
Stuart E. Athey, and Dick P. McCord, both of Troy, Ohio, assignors to Hobart Corporation, Troy, Ohio
Filed Oct. 1, 1979, Ser. No. 80,802
Int. Cl.³ G01N *5/04, 25/00*
U.S. Cl. 73—15 B **13 Claims**

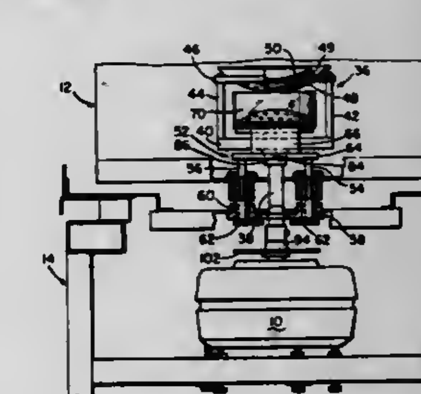

1. In a method of controlling the duration of application of microwave heating energy to a sample of food material con-

taining fat which is heat releasable in liquid form in order to obtain a relatively constant chemical analysis of the residue of said sample, said method including the steps of (a) locating said sample on a weighing device, (b) applying energy to said sample to heat the same and cause fat in said sample to be rendered as a liquid, and (c) monitoring the weight of said sample during the applying of said energy thereto at least from a time when said sample begins losing weight, the improvement comprising:

collecting said fat rendered from said sample as liquid in a container which is moved relative to said weighing device so that it is off said weighing device during the applying of said energy to said sample and said monitoring of said weight loss of said sample, whereby erratic fluctuations in weight readings, which would otherwise be caused by spattering and explosions of the rendered fat if the fat were collected on the weighing device, are avoided.

4,299,116
METHODS INVOLVING DIFFERENTIAL PRESSURE DETERMINATIONS

Lloyd A. Baillie, Homewood, and George A. Uhl, Crete, both of Ill., assignors to Atlantic Richfield Company, Philadelphia, Pa.

Filed Dec. 3, 1979, Ser. No. 99,348
Int. Cl.³ G01N *9/26*

U.S. Cl. 73—30 **2 Claims**

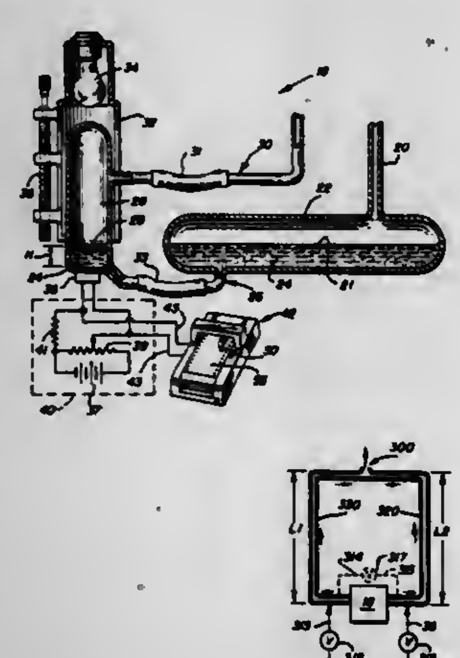

1. A process for determining the density of a vapor in a vertical zone having an inlet and an open outlet by means of a photocell manometer having a first sensor and a second sensor, said method comprising:

continuously introducing said vapor into said inlet at a rate sufficient to maintain said zone completely filled with said vapor,

measuring pressure transmitted by said first sensor relative to a pressure transmitted by said second sensor, wherein said first sensor is connected to a lower portion of said zone and said second sensor is connected to a reference pressure; whereby a process for continuously measuring and monitoring the density of said vapor can be achieved.

4,299,117
MULTI-FUNCTION ENGINE SENSOR

Gilman B. Andrews, Royal Oak, and George W. Goodrieb, Bloomfield Hills, both of Mich., assignors to The Bendix Corporation, Southfield, Mich.

Filed Nov. 23, 1979, Ser. No. 96,963
Int. Cl.³ G01N *25/20*

U.S. Cl. 73—35 **5 Claims**

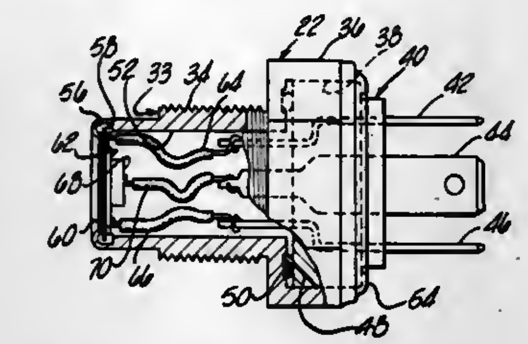

1. A multi-function engine sensor comprising:
a sensor body having an internal bore formed therein;
a sealing disc closing off said internal bore;
an acoustic pressure sensor having a surface mounted to the interior surface of said sealing disc;
a temperature sensor mounted to a surface of said acoustic pressure sensor remote from said surface mounted to said sealing disc;
first, second and third electrical leads connected respectively to the interior surface of said sealing disc, to said acoustic pressure sensor surface mounted to said temperature sensor, and to said temperature sensor on a surface remote from said one surface, whereby acoustic pressure and temperature sensor are provided.

4,299,118
VISCOMETER

Gerald S. Gau, Houston, and David E. Cain, The Woodlands, both of Tex., assignors to Halliburton Services, Duncan, Okla.

Filed Nov. 19, 1979, Ser. No. 95,589
Int. Cl.³ G01N *11/14*

U.S. Cl. 73—59 **36 Claims**

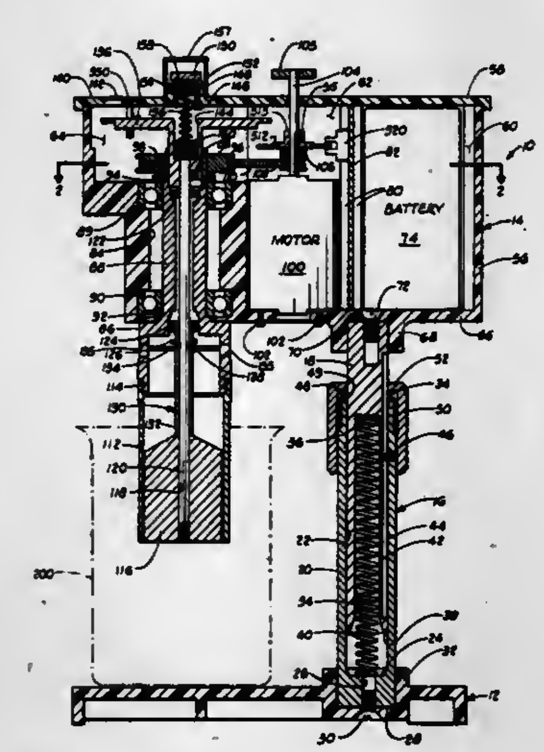

1. A viscometer comprising:
a base;
a housing;
a rotatable tubular sleeve extending downwardly from said housing;
support means for supporting said housing from said base, including one and only one support leg, adjustment means for adjusting a length of said support leg to vary a distance between said tubular sleeve and said base, and alignment means for maintaining said tubular sleeve over a fixed position on said base;
drive means for rotating said sleeve, including an electric motor, a toothed drive pulley attached to said motor, a toothed driven pulley connected to said rotatable tubular sleeve, and a resilient toothed endless belt engaging said drive pulley and said driven pulley;
a cylindrical non-metallic bob concentrically positioned within said tubular sleeve;
a bob shaft having a lower end connected to said bob and an upper end received in said housing;
torsional spring means connected between said bob shaft and said housing; and
indicator means for measuring a rotational deflection of said bob.

4,299,119
INCREMENTAL ROTARY VISCOMETER

J. Vincent Fitzgerald, Metuchen; Frank J. Matusik, Piscataway, and Donald W. Nelson, Voorhees, all of N.J., assignors to National Metal and Refining Company, Ltd., Edison, N.J.

Filed Mar. 13, 1980, Ser. No. 129,984
Int. Cl.³ G01N *11/14*

U.S. Cl. 73—59 **25 Claims**

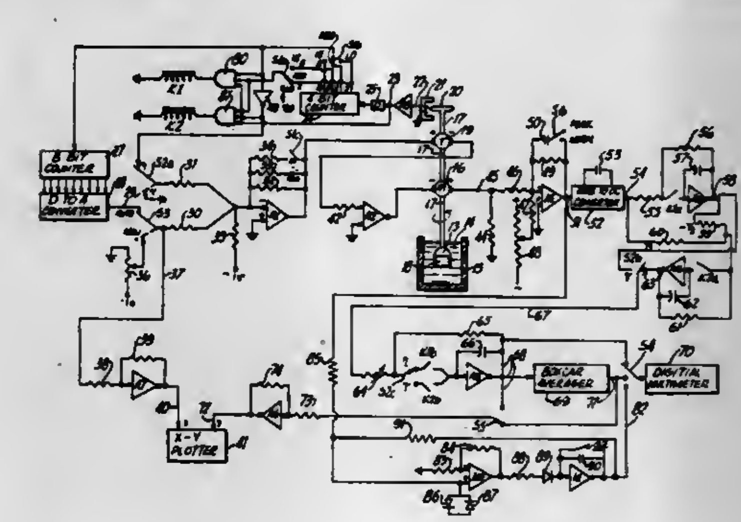

1. A process for determining the viscosity of or viscous loss in a fluid, comprising the steps of:
(a) providing a rotatable fluid shearing spindle adapted for immersion in said fluid;
(b) rotating said spindle at a first speed determined by a speed sweep signal, said first speed lying within a predetermined speed range having upper and lower speed limits;
(c) measuring the torque exerted by said fluid on said spindle at said first speed;
(d) subsequently varying said first speed by a given speed difference, to a second speed within said range, said first and second speeds comprising a set of speed values;
(e) measuring the torque exerted by said fluid on said spindle at said second speed;
(f) providing a viscosity or viscous loss indicating signal for said set corresponding to the difference between said first and second speed torque values; and
(g) thereafter causing said spindle speed to successively assume other sets of first and second speed values throughout said range, in accordance with said speed sweep signal, and repeating steps (c) through (f) for each of said successive other sets of speed values.

4,299,120
METHOD FOR DETERMINING PLANE STRAIN FRACTURE TOUGHNESS OF NON-ELASTIC FRACTURE MECHANICS SPECIMENS

Lynn M. Barker, Salt Lake City, Utah, assignor to Terra Tek, Inc., Salt Lake City, Utah

Filed Mar. 19, 1979, Ser. No. 21,463
Int. Cl.³ G01N *3/08, 3/32*

U.S. Cl. 73—87 **9 Claims**

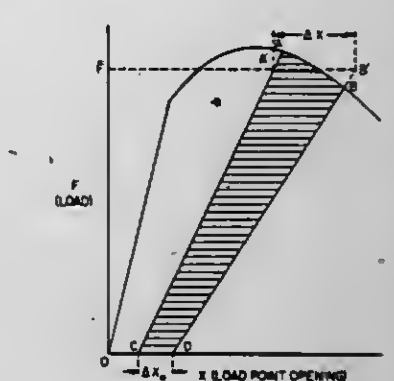

1. A method for determining plane strain fracture toughness of non-elastic fracture mechanics specimens comprising the steps of,

forming a slotted specimen of a material leaving an internal "v" shape as a remainder therein;
applying an incrementally increasing opening across said specimen so as to cause a crack to initiate and propagate in essentially plane strain conditions along a predetermined path through said specimen;
recording and comparing specimen loading against specimen opening displacement;
performing and recording at least two unloadings from different crack lengths;
determining specimen plasticity by dividing the difference in the residual zero-load mouth opening between the two unloading paths by the difference in mouth opening between the unloading paths at the average load;
determining the load required to advance the crack at a known crack location in said specimen; and
computing said material's fracture toughness from the load required to advance the crack at the known crack location in said specimen, and from considerations of said specimen size, plasticity, and geometry.

4,299,121
SUCTION SYSTEM IN AN ENGINE

Yoshiaki Asayama, and Kazuyuki Mizuta, both of Himeji, Japan, assignors to Mutsubishi Denki Kabushiki Kaisha, Tokyo, Japan

Filed Mar. 7, 1980, Ser. No. 128,122
Int. Cl.³ G01F *1/32, 1/72*

U.S. Cl. 73—118 **4 Claims**

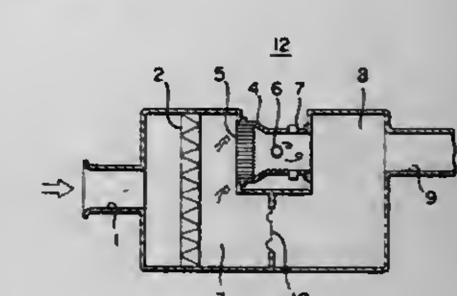

1. A suction system in an engine comprising a suction air volume detecting means to detect the volume of air to be sucked into said engine, an air cleaning chamber in communication with said suction air volume detecting means at its upstream side, an expansion chamber in communication with said suction air volume detecting means at its downstream side

and disposed in adjoining relation with said air cleaning chamber, and a vibration membrane disposed between said cleaning chamber and said expansion chamber so as to separate them.

4,299,122
FORCE TRANSDUCER
Toshitsugu Ueda, and Fusao Kousaka, both of Musashino, Japan, assignors to Yokogawa Electric Works, Ltd., Tokyo, Japan
Filed Oct. 10, 1979, Ser. No. 83,282
Claims priority, application Japan, Oct. 11, 1978, 53-124756
Int. Cl.^{3} G01L *1/10*
U.S. Cl. 73—862.59 14 Claims

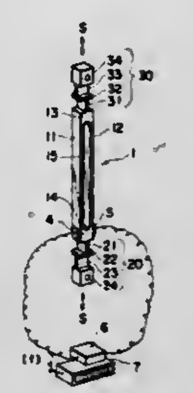

1. A force transducer for converting an applied input force to be measured into an oscillation frequency comprising: a vibrator having a pair of vibrating pieces disposed parallel to each other and symmetrical with respect to the center axis thereof, coupling pieces for joining the respective ends of said vibrating pieces, and attachment portions connected to said coupling pieces; exciting means secured to one of said vibrating pieces for causing said vibrator to resonate; vibration sensing means secured to the other of said vibrating pieces for detecting the vibration of said vibrator; an amplifier coupled between said exciting means and said vibrating sensing means which along with said vibrator form an oscillator, an input force to be converted being applied to said vibrating pieces in the longitudinal direction thereof via said attachment portion, said input force varying the frequency of oscillation of said oscillator whereby said input force may be measured by measuring the frequency of oscillation of said oscillator.

4,299,123
SONIC GAS DETECTOR FOR ROTARY DRILLING SYSTEM
Felix A. Dowdy, 2097 B 83rd Ct., Tulsa, Okla. 74136
Filed Oct. 15, 1979, Ser. No. 84,821
Int. Cl.^{3} E21B *47/10*
U.S. Cl. 73—155 10 Claims

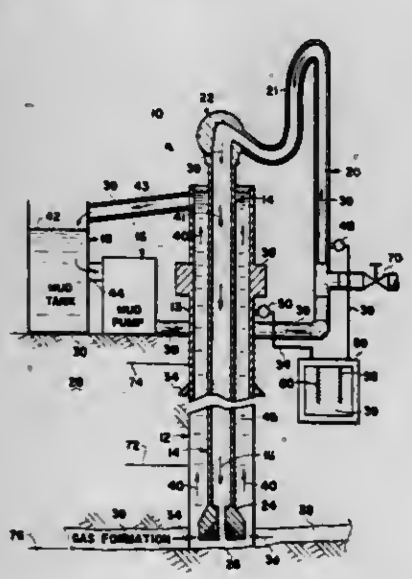

1. In a rotary drilling system comprising:
(a) a borehole in the earth with a drill string of known length in said borehole, and means to rotate said drill string and bit;
(b) a mud pump, mud tank, and mud standpipe, to supply drilling mud under pressure to said drill string, to flow to said bit and up the annulus between said borehole and said string, to said mud tank, said mud pump adapted to produce a pulsating hydraulic pressure in said standpipe;
(c) at least a first pressure gauge or pressure sensor inserted into, to measure and record the mud pressure in, said standpipe;
(d) at least a second pressure gauge or pressure sensor inserted into, to measure and record the mud pressure in, the annulus of said borehole, near the surface of the earth;

the method of detecting the flow of gas from the wall of said borehole into the mud in said annulus, comprising the steps of;
(1) recording as a function of time, the hydraulic pressures detected by said first and second pressure sensors, as separate record traces, a first trace from said first pressure sensor, and a second trace from said second pressure sensor;
(2) starting the mud circulation through said drill string and said annulus;
(3) correlating said first trace with said second trace, in order to determine the first time of travel of the elastic wave in said mud from said first pressure sensor to said second pressure sensor; and
(4) determining the first average time of travel per unit length of drill stem, of the elastic wave in said mud.

4,299,124
DEVICE FOR MEASURING THE MASS OF A FLOWING MEDIUM
Heinrich Knapp, Leonberg; Rudolf Sauer, Benningen; Peter Romann, Stuttgart; Udo Hafner, Ludwigsburg; Thomas Wilfert, Markgröningen, and Werner Kammerer, Vaihingen, all of Fed. Rep. of Germany, assignors to Robert Bosch GmbH, Stuttgart, Fed. Rep. of Germany
Filed Aug. 6, 1979, Ser. No. 64,265
Claims priority, application Fed. Rep. of Germany, Oct. 20, 1978, 2845662
The portion of the term of this patent subsequent to Jul. 24, 1998, has been disclaimed.
Int. Cl.^{3} G01F *1/68*
U.S. Cl. 73—204 11 Claims

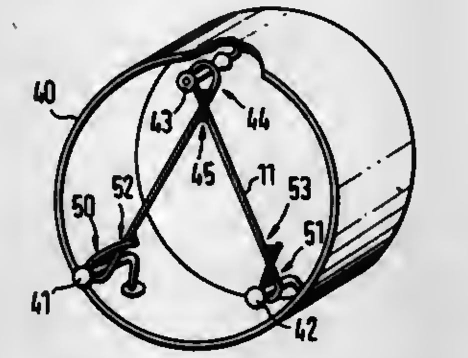

1. A device for measuring the mass of a flowing medium, especially for measuring the intake air mass of internal combustion engines comprising at least one temperature-dependent resistor arranged in the stream of the flowing medium, the temperature and/or resistance of this resistor being controlled in dependence on the mass of flowing medium and wherein a control variable is a measure of the mass of the flowing medium, said temperature-dependent resistor being provided in the form of a hot wire having a pair of metal junction ends, a probe ring having at least three anchoring points, said hot wire extending from one metal junction end to the other metal junction end via said at least three anchoring points, said hot wire having a loop portion extending around one of said at least three anchoring points to form intersecting wire sections, said intersecting wire sections being connected with each other at a connecting point in an electrically conductive relationship, the ends of said hot wire being formed as loops and extend around a respective end anchoring point, each of said wire end loops having intersecting wire sections connected with each other at a connecting point in electrically conductive relationship.

4,299,125
AIR QUANTITY METERING APPARATUS
Peter Romann, Stuttgart, and Udo Hafner, Lorch, both of Fed. Rep. of Germany, assignors to Robert Bosch GmbH, Stuttgart, Fed. Rep. of Germany
Continuation of Ser. No. 15,994, Feb. 28, 1979, abandoned. This application Aug. 12, 1980, Ser. No. 177,340
Claims priority, application Fed. Rep. of Germany, Mar. 4, 1978, 2809455
Int. Cl.^{3} G01F *1/68*
U.S. Cl. 73—204 15 Claims

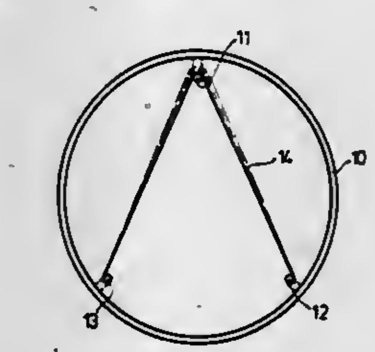

1. An air quantity metering apparatus and particularly for metering the induction air quantity in internal combustion engines comprising a temperature-dependent resistor element disposed generally transversely within an air stream, said temperature-dependent resistor element having its temperature and/or resistance being regulated in accordance with the air quantity for indicating a control value, and with the control value providing a standard for the air quantity, said temperature-dependent resistor element being embodied as a continuous heating wire having end portions terminating at and being stretched on respective sensor carrier members, said carrier members and said heating wire each having heat expansion coefficients adapted to be compatible to each other, said carrier members including at least three hook-like support elements for guiding said heating wire, said end portions terminating and affixed to a pair of said hook-like support elements, said heating wire being supported loosely substantially medially of its affixed end portions on at least one of said hook-like support elements and said heating wire having conducting tensile or compressive strains being essentially eliminated.

4,299,126
DEVICE FOR MEASURING THE LEVEL OF A LIQUID IN A CONTAINER
Erwin Heuwieser, Haar; Johann Kammermaier, Unterhaching, and Peter Roedl, Rosenheim, all of Fed. Rep. of Germany, assignors to Siemens Aktiengesellschaft, Berlin & Munich, Fed. Rep. of Germany
Filed Sep. 13, 1979, Ser. No. 75,670
Claims priority, application Fed. Rep. of Germany, Sep. 26, 1978, 2841889; Nov. 13, 1978, 2849143
Int. Cl.^{3} G01F *23/24*
U.S. Cl. 73—295 20 Claims

1. In a sensing device for measuring the fill level in a container at least partially filled with a liquid, particularly in a fuel tank, which includes a temperature-dependent electric resistor, means for heating the resistor, and a measuring device which indicates changes in the resistance value of the resistor due to change in the filling level of the liquid, the improvement of: said temperature-dependent resistor comprising an insulating carrier foil and a metal layer thereon, said metal layer having a specific resistance with a high temperature coefficient, said metal layer having a width which is at least 10 times greater than a thickness of said carrier foil, and said means for heating the resistor including a current source connected to said resistor, which current source supplies an electric current which is independent of the liquid level, a cover sheet extending in spaced relation relative to said carrier foil at the side thereof carrying the metal layer of said temperature-dependent resis-

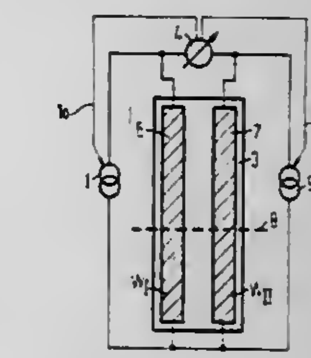

tor, spacing strips extending in the axial direction of said metal layer and connecting said foil and cover sheet at opposite sides of and laterally spaced from the metal layer of said temperature-dependent resistor forming a passageway having an open end adjacent to each end of the metal layer of said measuring resistor, and said measuring device including means for measuring the voltage drop at said resistor as an evaluation of the liquid level.

4,299,127
FLEXIBLE HUB MAGNETIC GYRO WHEEL
E. Paul Shannon, Rte. 2, Box 249, Killen, Ala. 35645
Filed Dec. 13, 1979, Ser. No. 103,353
Int. Cl.^{3} G01C *19/06*
U.S. Cl. 73—504 23 Claims

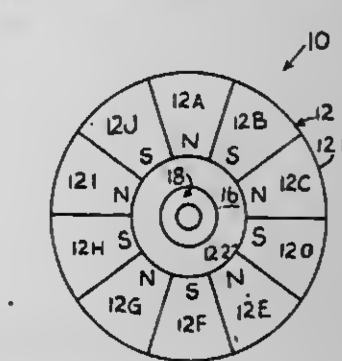

1. Flexible-hub magnetic gyro wheel for use on an axial shaft of a rate of turn indicator comprising:
a. ring member of ferromagnetic material having an inner diameter and an outer diameter and including alternating magnetic poles equally spaced about said ring member;
b. circular flexible hub of rubber diaphragm material including a center hole and having an outer diameter of a dimension between said inner and outer diameter of said ring member and affixed thereto, said rubber diaphragm material exhibiting lateral flexibility;
c. ring of steel material having an inner and outer diameter equal to said diameters of said ferromagnetic ring affixed to said rubber diaphragm material; and,
d. set collar and opposing washer affixed through said hole of said flexible hub whereby said ring member induces currents in adjacent sensing means of said rate of turn indicator, said flexible hub exhibits gyro properties about said shaft, and said steel ring enhances fore and aft balance and magnetic fields forward of the steel ring and decreases magnetic fields rearward of said steel ring thereby providing a flexible-hub magnetic gyro wheel for said rate of turn indicator.

4,299,128

ULTRASONIC SATELLITE-PULSE TECHNIQUE FOR CHARACTERIZING DEFECTS OF ARBITRARY SHAPE

George J. Gruber, P.O. Box 28510, San Antonio, Tex. 78284

Filed Apr. 21, 1980, Ser. No. 142,216

Int. Cl.³ G01N *29/04*

U.S. Cl. 73—627 29 Claims

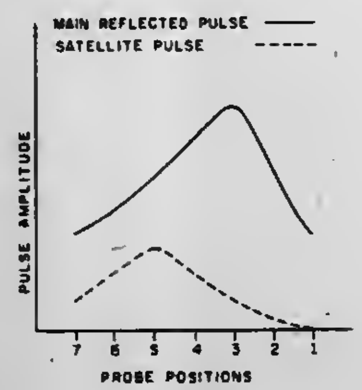

1. An ultrasonic test method using a test unit to identify an anomaly within a body as either a substantially planar anomaly or a substantially volumetric anomaly comprising the steps of:

(a) transmitting by means of a transducer an ultrasonic incident wave within said body to interact with said anomaly and create at least one reflected wave and at least one satellite wave;

(b) receiving by means of a transducer a portion of a reflected wave and a portion of a satellite wave;

(c) resolving by means of a resolution unit said received waves to produce a reflected wave component and a satellite wave component;

(d) detecting whether reception of said satellite wave component occurs prior to or after reception of said reflected wave component; and

(e) identifying said anomaly as substantially planar or as substantially volumetric depending upon the reception sequence of said reflected wave component and said satellite wave component.

4,299,129

PRESSURE MEASURING DEVICE

Klaus Ritzinger, Kettelerstrasse 2, 8033 Planegg, Fed. Rep. of Germany

Filed Jun. 13, 1979, Ser. No. 48,162

Claims priority, application Fed. Rep. of Germany, Jun. 16, 1978, 2826581

Int. Cl.³ G01L *9/02*

U.S. Cl. 73—746 27 Claims

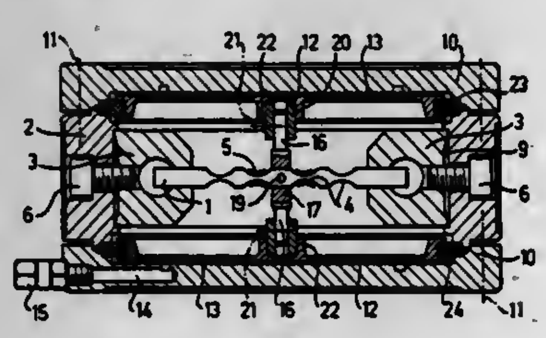

1. A pressure measuring device for the mechanical-electrical measurement of pressures, in which the deformation of a beam that is deformable by the pressure to be measured is picked off as an electrical signal by signal measuring means, and in which the deformable beam which supports the signal measuring means is fixed by its ends in a hollow support and centrally connected with at least one part admitting a compressive force to be measured, the pressure measuring device comprising a deformable beam consisting of one single measurement beam (1); a carrier ring (2) having clamping means (3,6) for clamping both ends of the beam, said carrier ring and clamping means (3,6) being arranged symmetrically to a longitudinal center plane of said beam, the measuring beam (1) having rigid portions separated by weakened portions (4) at four predetermined sites therealong between its ends for a defined deflection in the form of a trapezoidal deflection curve, said weakened portions extending in an arrangement that is symmetrical in respect to the center of the beam as well as to the clamping sites of the beam, over the full width of the measuring beam (1); signal measuring means comprising expansion-measuring strips (5) secured in said weakened portions; and a part admitting compressive force connected centrally and rigidly with the measuring beam (1), the part, in turn, being designed as a rigid piston (13) mounted tightly and movably in a pressure-receiving chamber (12).

4,299,130

THIN FILM STRAIN GAGE APPARATUS WITH UNSTRAINED TEMPERATURE COMPENSATION RESISTANCES

Donald J. Koneval, Arlington Heights, Ill., assignor to Gould Inc., Rolling Meadows, Ill.

Filed Oct. 22, 1979, Ser. No. 86,642

Int. Cl.³ G01B *7/20*

U.S. Cl. 73—766 6 Claims

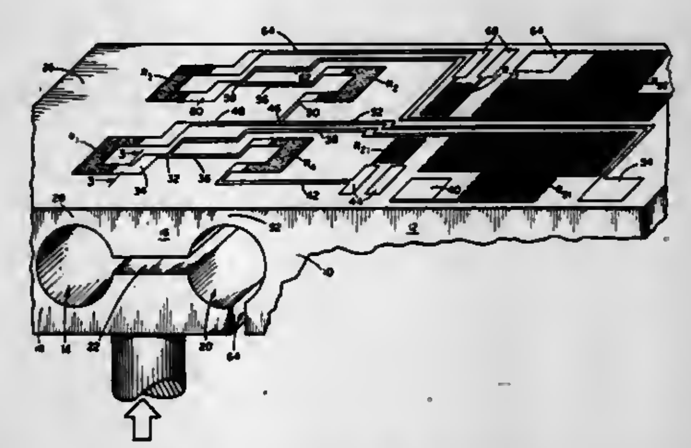

5. An improved thin-film strain gage transducer, comprising:

a flexure element having a portion deformable in response to an applied force;

at least one thin-film resistance element made of a first material having a first coefficient of resistance deposited on said deformable portion;

a pair of thin-film conductive leads made of a second material having a second coefficient of resistance opposite in algebraic sign of said first material, said leads connected to said resistance element at each end thereof to conduct an electrical current therethrough; and

at least one thin-film temperature compensating element made of the same material as said thin-film lead, deposited on said flexure element on an unstressed portion of said flexure element and connected in circuit to at least one of said leads, said temperature compensating element having a serpentine configuration, whereby changes in resistance of said strain gage resistance element due to temperature variations are offset by opposite changes in resistance of said temperature compensation element thus rendering the transducer less sensitive to variations in ambient temperature.

4,299,131

METHOD AND APPARATUS FOR TESTING THE CLAMP OF A SOLDERLESS ELECTRIC CONNECTION

Max Seitz; Hans P. Thumm; Günther Hagen, and Gerald Grad, all of Munich, Fed. Rep. of Germany, assignors to Siemens Aktiengesellschaft, Berlin & Munich, Fed. Rep. of Germany

Filed Jan. 8, 1980, Ser. No. 110,546

Claims priority, application Fed. Rep. of Germany, Jan. 24, 1979, 2902696

Int. Cl.³ G01N *3/20*

U.S. Cl. 73—789 11 Claims

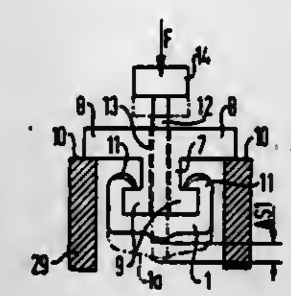

5. An apparatus for testing the clamp strength of a solderless electric connector, said connector having a conductor receiving aperture and a pair of opposed expandable legs for receiving a pin in electrically conducting relation to expose conductor wires, said apparatus comprising:

a double-T-shaped member having first and second parallel crossbars joined by a vertical portion of said member, said first crossbar having a greater length than said second crossbar and said second crossbar having a width receivable between said opposed legs of said connector;

a support means for said double-T-shaped member, said support means having spaced bearing surfaces for supporting the ends of said first crossbar with said second crossbar disposed beneath and between said bearing surfaces;

said double-T-shaped member having a bore through said vertical portion thereof and a pressure actuator slidably received in said bore;

a means for monitoring pressure applied by said pressure actuator,

whereby movement of said actuator in said bore applies a selected pressure to a connector to be tested supported on said second crossbar.

4,299,132

DEVICE FOR DISABLING THE CONTROL OF DISENGAGEMENT FOR THE TUNING KNOB, PARTICULARLY FOR A KEYBOARD CAR RADIO

Ezio F. Dellantonio, Rome, Italy, assignor to Autovox S.p.A., Rome, Italy

Filed Mar. 24, 1980, Ser. No. 133,088

Claims priority, application Italy, Mar. 30, 1979, 48563 A/79

Int. Cl.³ H03J *5/12*

U.S. Cl. 74—10.33 2 Claims

1. A device for disabling the control of disengagement for the tuning knob, particularly for a keyboard car radio in which a plurality of keys may be brought into their operative position in order to tune in the radio on corresponding stations, a key positioning link keeps each key in its operative position, a clutch disengagement control slider, when moved, disables control from the tuning knob and each key has a slide frame and a key cap movable on the slide frame between an inserted position and an extracted position, comprising:

a rocking member with two arms, fulcrumed on the slide frame of the key;

and a pin integral with the key cap,

the arrangement being such that, in the inserted position of the key cap, with respect to the key, the pin locks a first arm of said rocking member, which, through its second

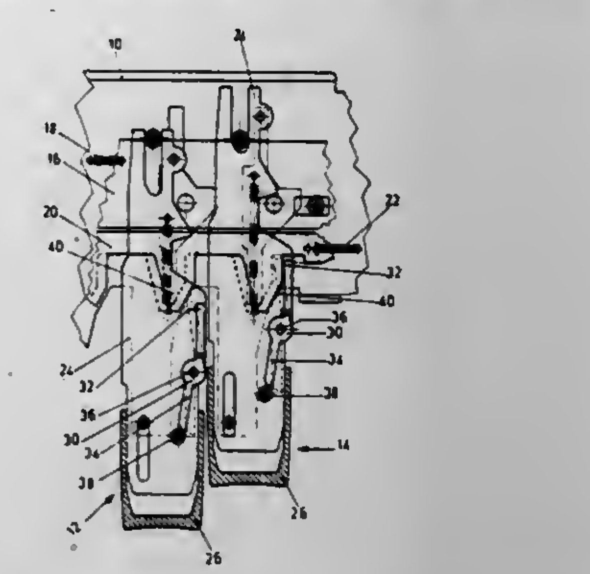

arm, moves the clutch disengagement control slider when the key is in its operative position.

4,299,133

GEARING

Werner Schüler, Renngasse 14, 1010 Vienna, Austria

Filed Apr. 16, 1979, Ser. No. 30,152

Claims priority, application Austria, Apr. 17, 1978, 2658/78

Int. Cl.³ F16H *1/06*

U.S. Cl. 74—415 14 Claims

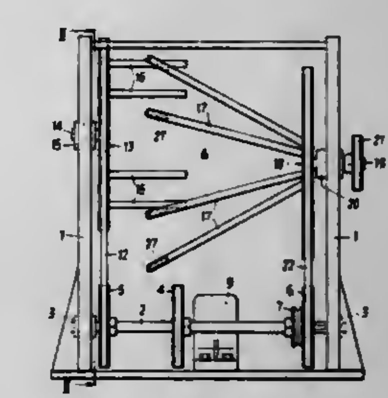

1. Gearing comprising a driving shaft and a driven shaft, a rotating driving means carrier member arranged on the driving shaft and being provided with driving means rotating along a circular orbital path, a rotating driven means carrier member arranged on the driven shaft and being provided with driven means rotating along a circular orbital path and cooperating with the drive means for the purpose of transmitting the driving force from the driving shaft to the driven shaft, said driven shaft being offset relative to said driving shaft, wherein said driven means protrude in direction towards the driving means carrier member and are arranged obliquely relative to the direction of the axis of the driven means carrier member in a diverging manner so that they encircle with their orbital path the orbital path of the driving means protruding from the driving means carrier member in a direction towards the driven means carrier member and wherein the drive means engage the driven means only in a portion of their orbital path, said engaging portion of the orbital path of the drive means being located distal from the axis of the driven shaft.

4,299,134
RESILIENT MECHANISM FOR SHIFTING GEARS
Richard H. Roy, and Douglas F. Edwards, both of Mt. Vernon, Ohio, assignors to The J. B. Foote Foundry Co., Fredericktown, Ohio
Filed Nov. 29, 1979, Ser. No. 98,648
Int. Cl.³ G05G *9/16*
U.S. Cl. 74—473 R **5 Claims**

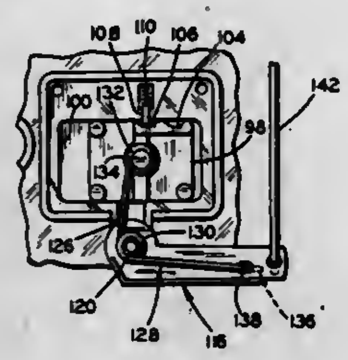

1. In combination, a shaft, a gear rotatably mounted on said shaft, a shift dog mounted on said shaft for rotation therewith, said shift dog being movable along said shaft between a position engaged with said gear and a position not engaged with said gear, a shifter fork engagable with said shift dog to move said shift dog between its two positions when said shifter fork is moved between two positions, and a resilient shift lever pivoted for movement between two positions for moving said shifter fork between its two positions, said shift lever having a rigid leg extending outwardly in one direction from the pivot and a resilient leg extending outwardly in another direction from the pivot, remotely-controlled means pivotally engaged with an end portion of said rigid leg for moving said rigid leg, said resilient leg being an elongate spring having a portion extending outwardly from the pivot and connected to said shifter fork and having another portion extending from the pivot along said rigid leg and connected to said rigid leg between said pivot and the end portion of said rigid leg connected to said remotely-controlled means.

4,299,135
DEVICE IN A GEAR SELECTION MECHANISM FOR A MANUAL VEHICLE TRANSMISSION
Tore T. Gens, Jönköping, Sweden, assignor to H. Albihns Patentbyra AB, Stockholm, Sweden
Filed Dec. 6, 1979, Ser. No. 100,878
Claims priority, application Sweden, Dec. 7, 1978, 7812589
Int. Cl.³ G05G *5/06, 9/18*
U.S. Cl. 74—475 **5 Claims**

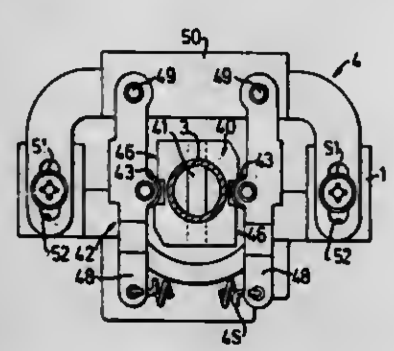

1. A device for indicating gear positions in a gear selection mechanism for manual vehicle transmission, said gear selection mechanism comprising a gear change lever spherically mounted in a mounting fixed to the vehicle, and a gear change shaft articulatedly connected to the gear change lever such that the gear change shaft, when rotated and axially displaced, transfers gear change lever movements for engaging and disengaging gears in a transmission, whereat a gear changing movement to and from a disengaged neutral position can be divided in a known way into a selector step and an engaging or disengaging step, or vice versa, characterized in that the device comprises a first means non-rotatably fixed to the gear change shaft, and at least a second means fixed to the vehicle, that either of said means has a profiled contact surface which is engaged under spring bias by at least one element mounted on the other of said means, that the first means assumes a stable position relative to the other means only in a position corresponding to the neutral position of the gear change shaft, and that during selector steps for the gear selection mechanism the first means assumes instable positions relative to the second means, in which positions the spring bias strives to return the first means to a position corresponding to the neutral position of the gear change shaft, so that a driver operating the vehicle gear change lever is informed about the gear positions by subjectively feeling required operation forces.

4,299,136
LOCKING SYSTEM FOR TWO BRAKE PEDALS OF A MOTOR VEHICLE MOUNTED ON A COMMON SHAFT
Julius Türi, Weiler, and Erich Stotz, Rommelshausen, both of Fed. Rep. of Germany, assignors to Dr. Ing. h.c.F. Porsche AG, Stuttgart, Fed. Rep. of Germany
Filed Apr. 11, 1980, Ser. No. 139,542
Claims priority, application Fed. Rep. of Germany, Apr. 20, 1979, 2916011
Int. Cl.³ B60T *7/06;* **B62D** *11/08*
U.S. Cl. 74—478.5 **13 Claims**

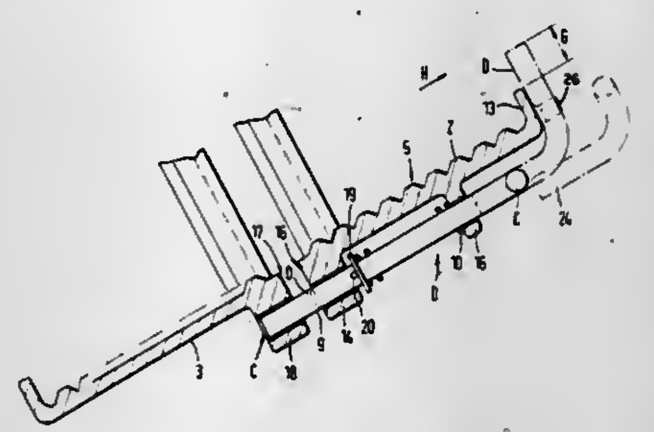

1. Locking system for two brake pedals of a motor vehicle, such as a tractor, for enabling joint and separate actuation of opposite wheel pairs, depending on the position of a bolt in the system, characterized by the fact that means associated with one of said pedals is provided for mounting the bolt for axial and rotational movement with respect to the pedals and the bolt is operable to connect said two pedals in a locked position and to separate the pedals in an unlocked position, and comprises a first stop and a second stop for use in assuming said locked and unlocked positions, respectively, said stops being staggered with respect to one another axially and radially, and being mounted so as to be brought into contact, by rotational and axial movements of said bolt, with a side wall of said one of the pedals that runs transversely with respect to a longitudinal axis of said bolt.

4,299,137
APPARATUS FOR MOUNTING A PLURALITY OF CONTROL MEMBERS
Richard J. Malecha, St. Louis Park, Minn., assignor to Towmotor Corporation, Mentor, Ohio
PCT No. PCT/US79/00320, § 371 Date May 14, 1979, § 102(e) Date May 14, 1979, PCT Pub. No. WO80/02549, PCT Pub. Date Nov. 27, 1980.
PCT Filed May 14, 1979, Ser. No. 89,115
Int. Cl.³ G05G *1/14*
U.S. Cl. 74—512 **10 Claims**

1. Apparatus (10) for commonly mounting a plurality of first control members (12, 14) and for selectively mounting at least

one of a plurality of second control members (16, 88), the apparatus (10) comprising:
first (18) and second (20) spaced apart frames;
first means (10*a*) for commonly supporting one (12) of the first (12, 14) andone (16) of the second (16, 88) control members on the first frame (18) and including:
a first bracket (26) secured to the first frame (18), the first bracket (26) including an upper end (28) having first (30) and second (32) spaced apart hollow ears, the first ear (30) extending in a first direction across the first frame (18) and the second ear (32) extending in a second opposite direction toward the second frame (20);
sleeve means (42) for rotatably supporting one (12) of the first control members (12, 14) on the first frame (18) intermediate the first (30) and second (32) ears of the first bracket (26), the sleeve means (42) extending between the first (30) and the second (32) ears and being directly supported thereby;

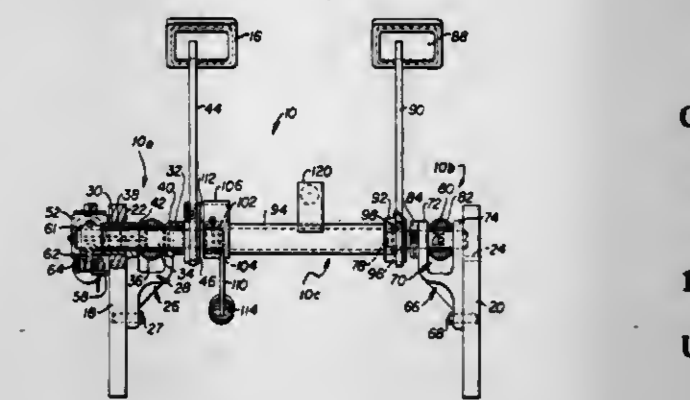

first (38) and second (40) bearings positioned within the sleeve means (42) and the first (30) and second (32) ears of the first bracket (26), respectively;
first shaft means (34) for supporting one (16) of the second control members (16, 88) on the first frame (18), the first shaft means (34) extending through the sleeve means (42) and the first (30) and second (32) ears of the first bracket (26) and being rotatably supported therein by the first (38) and second (40) bearings, respectively; and
means (44, 46) for coupling the one (16) of the second control members (16, 88) to the first shaft means (34);
second means (10*b*) for supporting another (14) of the first control members (12, 14) on the second frame (20); and
means (10*c*) for selectively mounting another (88) of the second control members (16, 88) on the second supporting means (10*b*).

4,299,138
STEERING WHEEL FOR VEHICLES
Carl D. I. Sjöqvist, Järna, Sweden, assignor to Saab-Scania Aktiebolag, Sodertalje, Sweden
Filed Nov. 7, 1979, Ser. No. 92,023
Claims priority, application Sweden, Nov. 10, 1978, 7811616
Int. Cl.³ B62D *1/10*
U.S. Cl. 74—552 **8 Claims**

1. A steering wheel assembly for a vehicle comprising a steering wheel rim and a steering wheel hub, said steering wheel hub comprising two telescopically connected, concentric hub parts, of which an outer hub part is firmly attached to the steering wheel rim via a plurality of spokes, and of which an inner hub part is adapted to be rigidly mounted to a steering shaft in the vehicle, said outer hub part being connected to said inner hub part via a locking means comprising a transverse wedge, said wedge in a locking position engaging an axial slot in said inner hub part and expanding said inner hub part so that said outer hub part will be fixed to said inner hub part, said

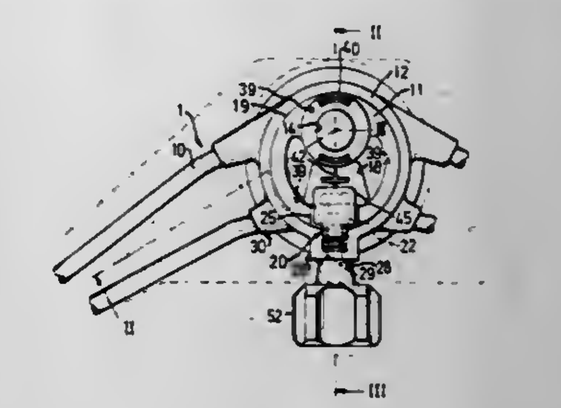

wedge in a non-locking position allowing axial adjustment of said outer hub part relative to said inner hub part.

4,299,139
FOOT PEDAL FOR MOTOR VEHICLES
Gerhard Krüger, and Winfried Griep, both of Bonn, Fed. Rep. of Germany, assignors to Vaw Leichtmetall GmbH, Bonn, Fed. Rep. of Germany
Filed Oct. 24, 1979, Ser. No. 87,777
Claims priority, application Fed. Rep. of Germany, Nov. 13, 1978, 7833673[U]
Int. Cl.³ G05G *1/14*
U.S. Cl. 74—560 **2 Claims**

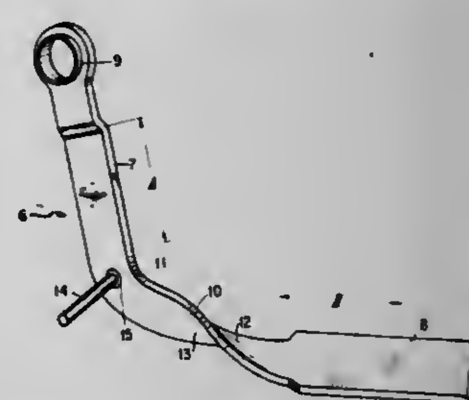

1. A foot pedal for use with motor vehicles, comprising an elongated unitary member formed from a flat piece of metal and including two planar sections forming an angle therebetween of less than 180 degrees, the two sections being joined by a ninety degree twisted bridge portion formed at the apex of the angle between the two sections so that each of said sections lies substantially entirely in a plane perpendicular to the plane of the other, with one of the sections including means for mounting said foot pedal for pivotal movement in response to a force applied to a planar surface of the other of said sections.

4,299,140
TRANSFER DEVICE FOR FOUR WHEEL DRIVE
Hiroyoshi Kako, and Hajime Arai, both of Aichi, Japan, assignors to Toyota Jidosha Kogyo Kabushiki Kaisha, Toyota, Japan
Filed Dec. 20, 1978, Ser. No. 971,567
Claims priority, application Japan, Jul. 12, 1978, 53/854467
Int. Cl.³ F16H *37/06, 37/08, 3/38*
U.S. Cl. 74—665 G **4 Claims**

1. In a transfer device associated with a power transmission unit for an automotive vehicle, comprising:
an input shaft for connection to an output shaft of said transmission unit;
an intermediate shaft rotatably coupled at the inner end thereof with said input shaft;

a first output shaft rotatably coupled at the inner end thereof with the outer end of said intermediate shaft;
a countershaft arranged in parallel with said input and intermediate shafts and being integrally provided with low and high speed counter-gears;
a second output shaft arranged in parallel with said countershaft and being integrally provided with an output gear meshing with said high speed counter-gear;
a low speed drive gear rotatable on said input shaft and being in mesh with said low speed counter-gear;
a high speed drive gear rotatable on said intermediate shaft and being in mesh with said high speed countergear, said high speed drive gear having the same number of teeth as those of said output gear; and
a differential gear unit mounted on said intermediate shaft and including an input member connected with said intermediate shaft, a first output member connected with first output shaft, and a second output member connected with said high speed drive gear;

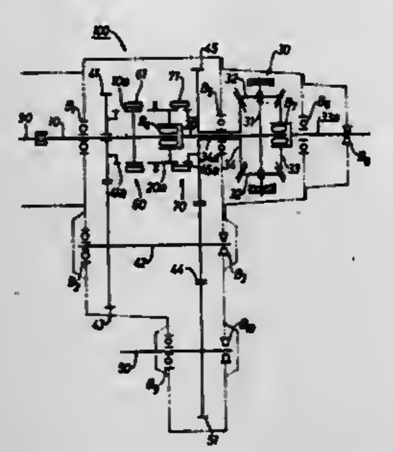

further comprising;
a first selector gear unit mounted on said input shaft and adapted only for selectively connecting said input shaft to one of said low speed drive gear and said intermediate shaft to complete a low or high speed gear train;
a second selector gear unit arranged between said low and high speed drive gears and mounted on the inner end of said intermediate shaft coaxially adjacent with said first selector gear unit and adapted only for connecting said high speed gear to said intermediate shaft independently of said first selector gear unit to make said differential gear unit inoperative and for disconnecting said high speed drive gear from said intermediate shaft to make said differential gear unit operative.

4,299,141
MECHANICAL TRANSMISSION HAVING REDUCED FRICTION DIRECT DRIVE
Lamar J. Fairchild, Rte. 9, Box 500, Meridian, Miss. 39301
Filed Sep. 17, 1979, Ser. No. 76,541
Int. Cl.[3] F16H *57/10*
U.S. Cl. 74—785 **11 Claims**

1. A mechanical transmission comprising:
an input shaft connected to a source of power;
a clutch cover means connected to said input shaft;
a tubular shaft connected to said clutch cover means and extending rearwardly therefrom;
an output shaft disposed coaxial with and extending through said tubular shaft;
a clutch assembly disposed within said clutch cover means and connnected to one end of said output shaft, said clutch assembly being selectively engageable with said clutch cover means for rotation therewith;
a gear housing rotationally mounted around said tubular shaft and said output shaft;
a gear assembly disposed within said gear housing comprising: a sun gear attached to said tubular shaft; a plurality of planetary gears engaging said sun gear; a carrier means for supporting and drivingly connecting said planetary gears to said output shaft; and a ring gear mounted on the inside of said gear housing engaging said planetary gears;
a frame means for supporting said output shaft and said gear housing;

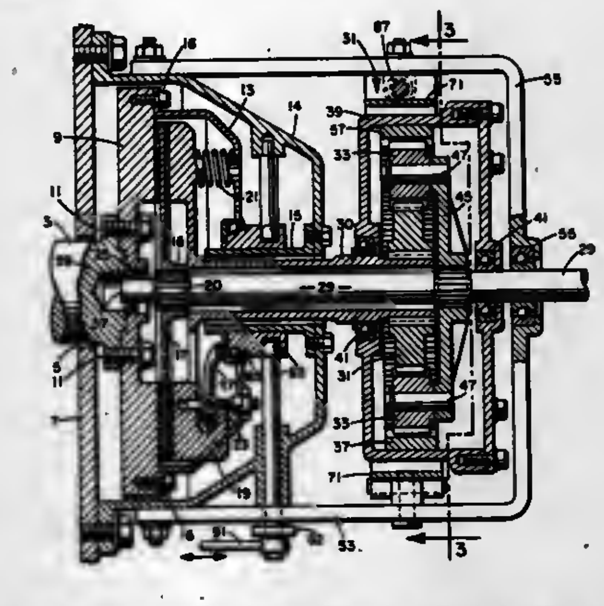

brake means, mounted on said frame means adjacent said gear housing, selectively engageable with said gear housing; and
means for selectively actuating and engaging said clutch assembly and said brake means.

4,299,142
GRINDING MACHINE WITH REORIENTABLE CHAIN HOLDING CLAMP
Peter D. Kaye, Monroe, Oreg., assignor to Bell Industries, Inc., Los Angeles, Calif.
Filed Jan. 18, 1980, Ser. No. 113,373
Int. Cl.[3] B23D *63/16*
U.S. Cl. 76—25 A **9 Claims**

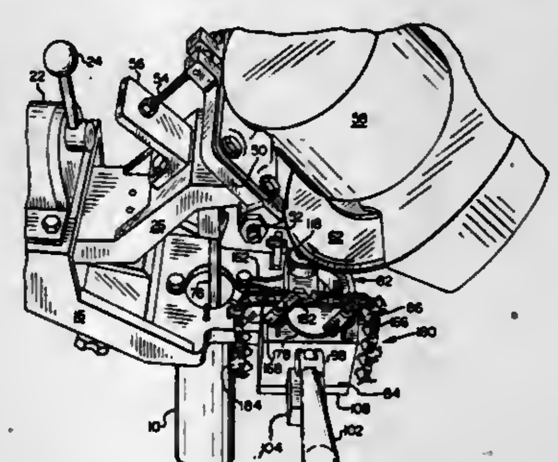

1. A saw chain grinding machine comprising,
a clamp, and means mounting the clamp for swinging movement about an upright axis,
said clamp having releasable means for holding the base of a reach of saw chain with upper extremeties of said chain facing upwardly,
a grinding wheel disposed above said clamp having a grinding wheel rotation axis disposed laterally of the chain held by said releasable means, said grinding wheel having a lower side edge located to one side of said grinding wheel rotation axis disposed above said releasable means of said clamp,
first and second stop means operable to limit swinging movement of the clamp about said upright axis, said releasable means throughout said limited swinging movement being maintained below said lower side edge of the grinding wheel, and
a mounting for said grinding wheel including means for lowering the grinding wheel to move its said side edge toward the clamp and into the chain held by said releasable means.

4,299,143
APPARATUS FOR AUTOMATICALLY PROFILE-FORMING SAW TEETH
Taro Nanba, Sanjo, Japan, assignor to Yugenkaisha Nakaya Nokogirikikai Seisakusho, Niigata, Japan
Filed Oct. 9, 1979, Ser. No. 82,892
Claims priority, application Japan, Oct. 13, 1978, 53-125751
Int. Cl.[3] B23D *63/12*
U.S. Cl. 76—43 **6 Claims**

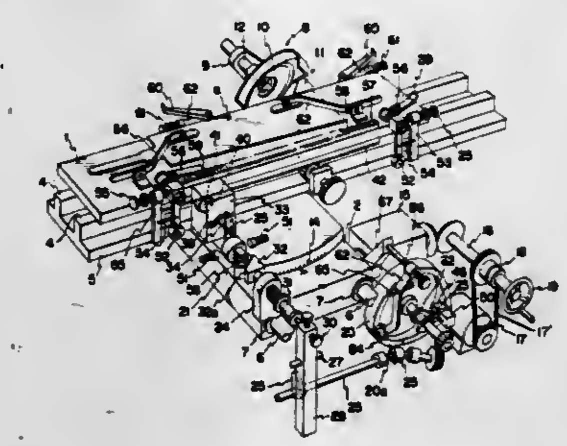

1. In saw tooth forming apparatus wherein a saw blade to be toothed is affixed to a carriage, said carriage being both longitudinally and transversely movable to advance the saw blade toward and away from a rotatable cutter positioned in confronting relation to said saw blade, the improvement comprising:
intermittent carriage feed means operative to intermittently advance said carriage in a longitudinal direction, said carriage feed means including a rack mounted on said carriage, a clutch mechanism having an output shaft and a pinion mounted on said output shaft and aligned for engagement with said rack, an input shaft for said clutch mechanism and indexing means for reversibly rotating said input shaft about its longitudinal axis, and clutch control means coordinated with said indexing means to selectively effect engagement and disengagement of said clutch mechanism whereby to cause intermittent longitudinal advancement of said carriage by rotation of said pinion in response to rotation of said input shaft;
a template member positioned on said carriage and defining a pattern of teeth at longitudinally spaced intervals along said carriage corresponding to the desired spacing of teeth to be formed in said saw blade, and a positioning member selectively engageable with successive teeth of said template as said carriage is intermittently advanced by said carriage feed means; and
transverse carriage advancing means coordinated with said clutch control means to control the transverse movement of said carriage toward and away from said rotatable cutter for forming a succession of teeth in said saw blade as said carriage is intermittently advanced in a longitudinal direction by said carriage feed means.

4,299,144
HAND TOOL AND METHOD FOR USING SAME
Roy J. Mefferd, 219 W. Myrtle St., Laurens, Iowa 50554
Filed Mar. 19, 1980, Ser. No. 131,701
Int. Cl.[3] B25B *19/00, 27/00*
U.S. Cl. 81—3 R **6 Claims**

1. A hand tool for rotating a nut threadably mounted on a shaft, said nut being rotatable about a first axis to alternatively loosen and tighten its threaded connection to said shaft, said nut having at least one hole therein of a predetermined shape and size, said hole being located radially outwardly from said first axis whereby application of a tangential force to said nut at said hole will create a rotational force to said nut about said first axis; said hand tool comprising:
an elongated handle portion having a blunt end for receiving blows from a hammer, and a second end opposite from said blunt end for engaging said nut,
said second end comprising at least one pin of predetermined size and shape which corresponds to the size and shape of said hole whereby said pin will matingly fit within said hole,
said handle portion having a longitudinal handle axis and said pin having a longitudinal pin axis which extends laterally away from said handle axis whereby a hammer blow applied to said blunt end of said handle will apply a rotational force to said nut about said first axis whenever said pin is within said hole,

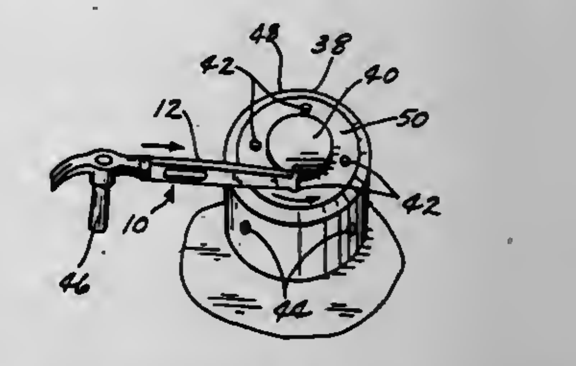

said handle portion comprising a shank portion adjacent said pin, said shank portion having a shank surface for engaging the surface of said nut adjacent said hole whenever said pin is within said hole, said shank surface and the longitudinal axis of said pin being approximately perpendicular to one another whereby said shank surface will fit in facing engagement with said adjacent surface of said nut when said pin is within said hole.

4,299,145
RATCHET WRENCH
Matti Rautio, Karjalankatu 18., 65140 Vaasa 14, and Aaro Rautio, Vuoritie, 60200 Seinajoki 20, both of Finland
Filed Mar. 17, 1980, Ser. No. 131,175
Claims priority, application Fed. Rep. of Germany, Mar. 20, 1979, 2910821
Int. Cl.[3] B25B *17/00*
U.S. Cl. 81—57.29 **8 Claims**

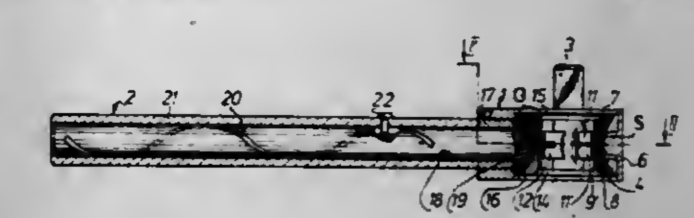

1. A ratchet wrench comprising, a head, an axle rotatably journalled to said head, a drive gear connected to said axle for rotation in said head, a pair of driven gears rotatably mounted in said head, each meshing with said drive gear and rotatable in an opposite direction with rotation of said axle in one direction, a socket shaft rotatably mounted in said head, and keeper means connected in said head for engaging one of said driven gears with said shaft at a time to rotate said shaft in a working direction with rotation of said axle in either direction, said keeper means comprising an inner knurled surface of said pair of driven gears, a keeper plate having an outer knurled surface engageable with said knurled surfaces of said driven gears and biasing means connected between said keeper plate and said socket shaft for biasing said keeper plate outwardly against said inner knurled surfaces to engage at least one of said inner

knurled surfaces and release engagement from the other of said knurled surfaces with rotation of said axle.

4,299,146
CLAMPING DEVICE
Richard E. Phelps, 12155 Oak Rd., Otisville, Mich. 48463
Filed Oct. 26, 1979, Ser. No. 88,532
Int. Cl.³ B25B *7/02*
U.S. Cl. 81—420 **5 Claims**

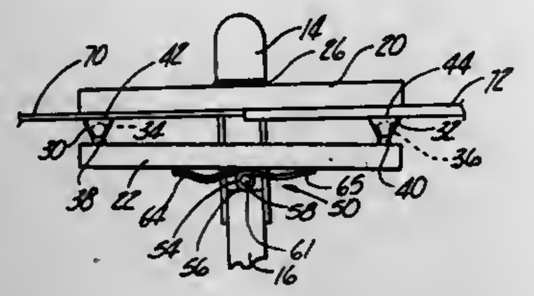

1. A clamping device for holding two differently-sized workpieces in an abutting relationship wherein a surface of each workpiece is aligned in a single plane, said clamping device comprising
- a first support having a first clamping plate mounted thereon,
- a second support having a second clamping plate mounted thereon,
- means spaced from said clamping plate and mounting said first support to said second support, said means permitting relative movement of said first clamping plate in a line of movement toward and away from said second clamping plate,
- said first clamping plate being elongated in a direction transverse to the line of movement of said clamping plates and in a direction oblique to said mounting means,
- said second clamping plate being elongated in a direction parallel to the direction of elongation of said first clamping plate,
- means pivotally mounting said second plate to said second support on an axis transverse to the direction of elongation of said second clamping plate,
- at least two support members swivelly secured to said second clamping plate, and extending toward said first clamping plate, said support members being spaced from each other in the direction of elongation of said clamping plates,
- whereby with two differently sized, elongated workpieces inserted between said clamping plates with said workpieces in abutting relationship said second clamping plate will pivot with respect to said second support and said support members will swivel with respect to said second clamping plate upon relative movement of said clamping plates toward each other to securely clamp said workpieces in abutting relationship between said clamping plate.

4,299,147
METHOD AND APPARATUS FOR CUTTING CAN BODIES
Roy E. Rogers, Louisville, Ky., assignor to Donald V. Hanlon, Glendale Heights, Ill., a part interest
Filed Sep. 6, 1979, Ser. No. 72,993
Int. Cl.³ B23B *1/00, 37/00;* **B31C** *1/00*
U.S. Cl. 82—47 **9 Claims**

1. A method for cutting individual can body blanks from an elongated blank of the type having an axially movable knife carriage where the elongated blank travels axially by flexible drive means substantially together with the knife carriage, the steps of which comprise
- engaging a retainer element pivotally mounted on said knife carriage against an end of said elongated blank,
- urging said blank upstream with said retainer element against the driving bias of said flexible drive means into a fixed position relative to said knife carriage, and

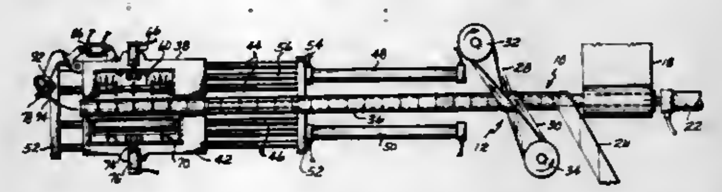

- cutting at least a portion of said blank to form at least one individual can body blank while said blank is held in said fixed position.

4,299,148
METHOD FOR CUTTING AND MAINTAINING SEPARATE SEGMENTS OF A GUMMOUS COMESTIBLE
Gerard B. Meier, 280 Hight Crest Dr., West Milford, N.J. 07480
Filed Apr. 6, 1978, Ser. No. 894,058
Int. Cl.² B26D *3/24*
U.S. Cl. 83—34 **3 Claims**

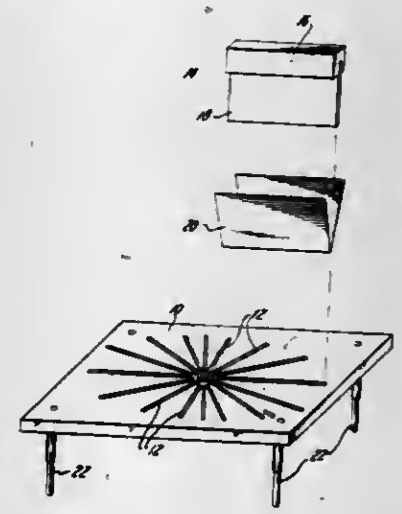

1. In a method for cutting and maintaining in separate segments a gummous comestible, such as a pie, wherein a cutting tool having appropriate length is positioned to cut the segments of said comestible, the improvement comprising the steps of:
(a) positioning a disc-like template above the comestible, said template having therein a plurality of radiating extending slots;
(b) folding a sheet of wax-like material over a cutting edge of said cutting tool said fold extending about each of the sides of said tool;
(c) simultaneously holding said sheet of wax-like material above each side of said cutting tool and passing said cutting tool and wax-like sheet of material through one of said radiating extending slots and into the gummous comestible;
(d) permitting said wax-like sheet of material to remain embedded in said gummous comestible in the position defined by its passage through the radiating slot; and
(e) repeating each of said steps with respect to each radiating slot and each corresponding position over the comestible material for which a cut and respective separated segment of the comestible is desired.

4,299,149
APPARATUS FOR REMOVING AND STACKING OF SHEET METAL STRIPS CUT BY A PLATE SHEAR
Eduard A. Haenni, Zofingen, and Christian Ragletti, Gockhausen, both of Switzerland, assignors to Haemmerle AG, Zofingen, Switzerland
Filed Sep. 17, 1979, Ser. No. 76,180
Claims priority, application Fed. Rep. of Germany, Sep. 19, 1978, 2840668
Int. Cl.³ B26D *7/06*
U.S. Cl. 83—91 **8 Claims**

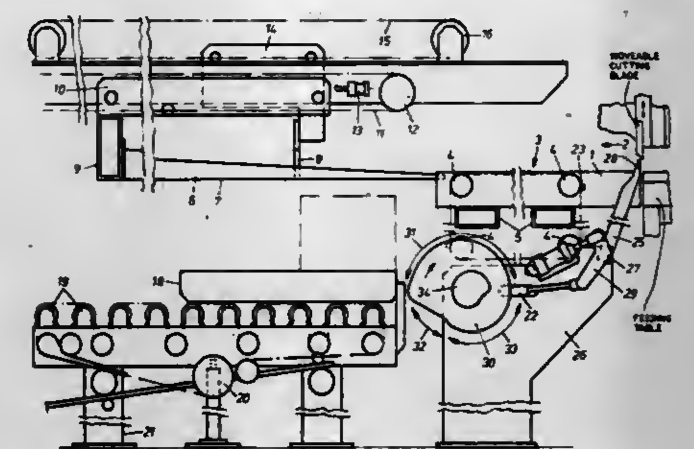

1. An apparatus for cutting strips from a sheet metal plate removing the cut strips from the cutting blades and stacking the strips on a plurality of piles comprising:
- cutting blades comprising a stationary blade and a moveable blade;
- a feeding table for supporting the metal plate which is cut into strips by said cutting blades;
- said stationary blade being arranged along an edge of said feeding table and said moveable blade cooperating with said stationary blade to cut strips adjacent said edge;
- a supporting member located behind said stationary blade and arranged at the same height as said feeding table;
- displacing means cooperating with said supporting member to displace said supporting member from a first working position behind said stationary blade, above and next to the plurality of piles of cut strips of sheet metal to a second position which clears said plurality of piles and is away from said plurality of piles of cut strips;
- conveying means between said stationary blade and said supporting member for moving the cut strips to the plurality of piles;
- pushing means to accelerate said cut strips said conveying means; and
- a stop member selectively displaceable from a first position for a predetermined distance behind said stationary blade to a second retracted position being above one of the plurality of piles of sheet metal strips.

4,299,150
METHOD AND APPARATUS FOR SEVERING PORTIONS FROM A PLURALITY OF FROZEN COLUMNS OF FISH OR THE LIKE
Larry Huston, Buffalo; Clifton H. Morrison, St. Paul; Glenn Rasmussen, Champlin, and Takuzo Tsuchiya, Minneapolis, all of Minn., assignors to General Mills, Inc., Minneapolis, Minn.
Filed May 31, 1979, Ser. No. 43,978
Int. Cl.³ B26D *3/20, 1/06, 7/06*
U.S. Cl. 83—110 **33 Claims**

1. Apparatus for severing frozen columns of fish or the like into identical portions comprising first means for holding a number of said frozen columns in a generally parallel relation with each other, second means for providing a first surface against which one end of each of said frozen columns abuts, said first surface being spaced from said first means, an elongated cutter blade having a knife edge, third means for advancing said blade in a plane generally parallel to said first surface for simultaneously severing a portion from one end of each of said columns, said second means having a thickness corresponding generally to the thickness of said blade, fourth means providing a second surface supporting the second means for sliding movement relative to said fourth means, and a fifth

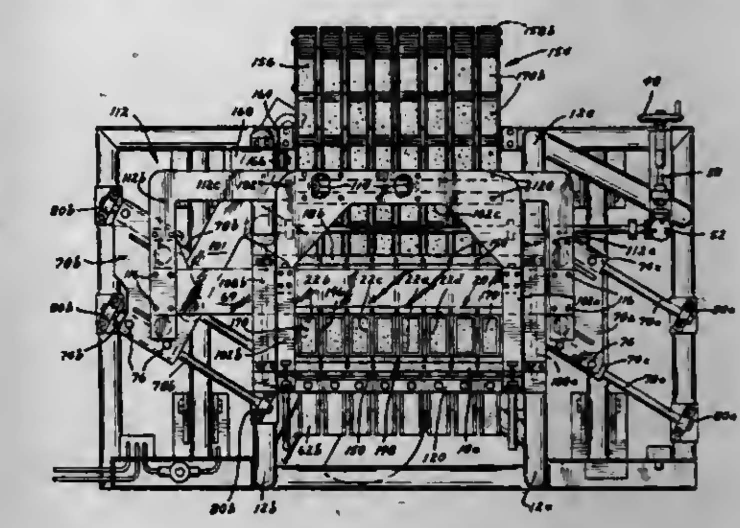

means for retracting said second means as said blade is advanced by said third means, said second means being retracted in a plane generally parallel to the plane in which said blade is advanced.

4,299,151
CUTTING MECHANISM FOR A PACKAGING MACHINE
Charles A. Burton, Columbus, Ohio, assignor to Rexham Corporation, New York, N.Y.
Filed Mar. 24, 1980, Ser. No. 133,473
Int. Cl.³ B26D *1/60*
U.S. Cl. 83—300 **9 Claims**

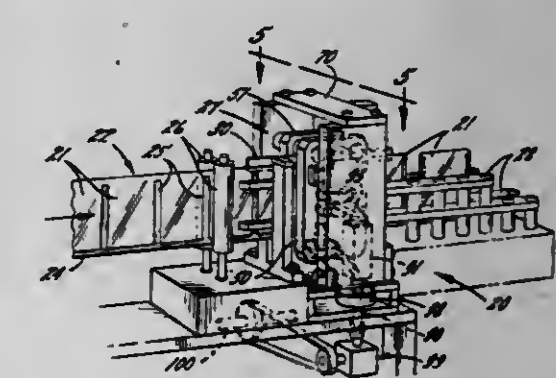

1. A packaging machine having means for advancing a strip of interconnected, open-ended pouches edgewise along a predetermined path with the open ends of the pouches facing upwardly, said strip being defined by a pair of face-to-face panels made of flexible material and sealed together by longitudinally spaced and vertically extending heat seals which terminate short of the upper edges of the panels, a substantially vertical splitter bar overlying said path and projecting downwardly between said panels to hold the upper edge portions of said panels separated from one another, said splitter bar having an opening formed therethrough, said opening having a lower wall located between the upper edges of said panels and the lower edge of said bar, a first cutter movable laterally within said opening and periodically operable to cut through the upper edge portions of said panels at longitudinal positions corresponding to the longitudinal positions of said heat seals, a downwardly opening notch formed through the lower edge portion of said bar downstream of said opening, said notch having an upper wall located below the upper edges of said panels, and a second cutter located downstream of said first cutter and periodically operable to cut through said heat seals thereby to separate successive leading pouches from said strip, said second cutter having an upper end which extends upwardly at least to the level of the lower end of said first cutter, which terminates short of the upper wall of said notch and

which moves laterally within said notch during operation of said second cutter.

4,299,152
MITRE BOX
E. Curtis Ambler, Newington, Conn., assignor to The Stanley Works, New Britain, Conn.
Division of Ser. No. 42,904, May 29, 1979, Pat. No. 4,241,634. This application May 7, 1980, Ser. No. 147,371
Int. Cl.³ B27B *21/00*
U.S. Cl. 83—763 **5 Claims**

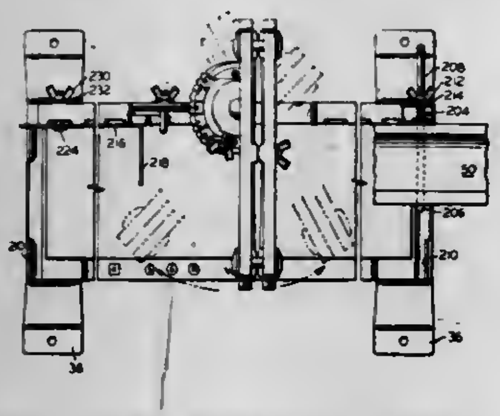

1. In a mitre box, the combination comprising:
A. a base member having a horizontal bed surface;
B. a vertical post on said base member extending above said bed surface;
C. a saw guide subassembly rotatably supported on said post, said subassembly including a first saw guide element rigidly supported relative to said post and a second saw guide element carried by said first saw guide element, said saw guide elements having bearing surfaces adjacent the lower end thereof adapted to firmly but slidably seat a saw therebetween, said saw guide elements having cooperating pivot means adjacent their upper edges and located at substantially the midpoint of their length, said pivot means providing a pivot point between the upper ends of said guide elements, said saw guide elements having adjustable locking means spaced adjacent and below said pivot means and in alignment therewith to draw said bearing surfaces of said saw guide elements together about the associated saw, and said saw guide elements also having cooperating alignment means adjacent the upper end thereof to effect alignment thereof, whereby said second saw guide element may rock along its length about said pivot means to equalize the pressure exerted by said bearing surfaces on the associated saw provided by tightening said locking means; and
D. means for locking said saw guide subassembly in a preselected rotated position about said post.

4,299,153
TOUCH RESPONSIVE ENVELOPE CONTROL FOR ELECTRONIC MUSICAL INSTRUMENT
William R. Hoskinson, Elburn, and Joseph C. Carley, Sycamore, both of Ill., assignors to The Wurlitzer Company, DeKalb, Ill.
Filed Aug. 10, 1979, Ser. No. 65,619
Int. Cl.³ G10H *3/00, 1/02*
U.S. Cl. 84—1.1 **14 Claims**

1. A touch responsive tonal envelope waveshape control system for an electronic musical instrument including tone generating means, keying means and manually actuatable means for initiating the generation and keying of a tone by said generating means and keying means, said system comprising: two contacts, means for producing a signal of predetermined but different phase at each of said two contacts, said manually actuatable means being movable between said two contacts for receiving one or neither of said two signals, phase comparison and encoding circuit means responsive to the signal condition of said manually actuatable means for producing first encoded signals corresponding to said condition, second encoding circuit means responsive to said first encoded signals for producing an encoded intensity signal corresponding to the intensity of player actuation of said manually actuatable means and amplitude control circuit means responsive to said encoded intensity signal and cooperative with said keying means for

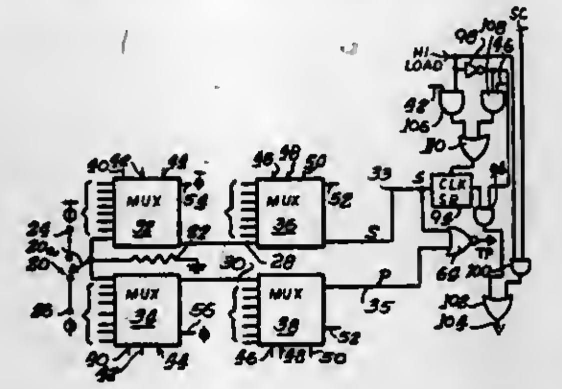

controlling the peak amplitude of the tonal envelope waveshape, thereby keying the initiated tone from said generating means having a tonal envelope waveshape having a peak amplitude which bears a predetermined relation to the intensity of player actuation of the instrument.

4,299,154
ELECTRONIC RHYTHM GENERATOR
Ralph N. Dietrich, Georgetown; Stephen L. Howell, and John W. Robinson, both of Jasper, all of Ind., assignors to Kimball International, Inc., Jasper, Ind.
Filed Aug. 27, 1979, Ser. No. 69,977
Int. Cl.³ G10H *1/40*
U.S. Cl. 84—1.03 **17 Claims**

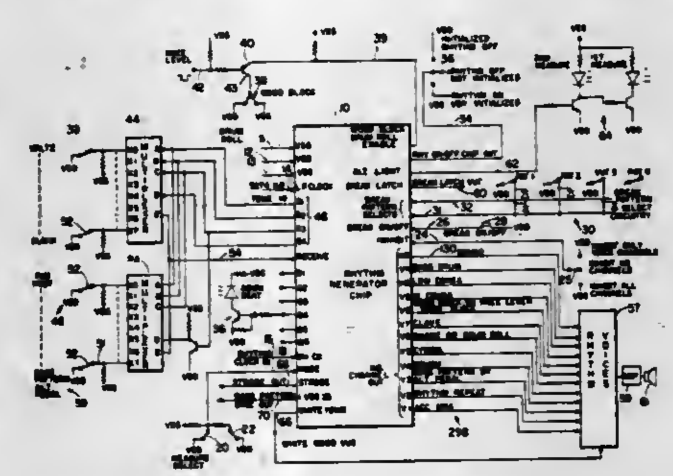

1. An electronic rhythm generator comprising:
memory means for storing a plurality of rhythm patterns and for storing a plurality of rhythm break patterns,
some of said rhythm patterns being nominally programmed to be rhythmically incompatible with one set of said rhythm break patterns and nominally programmed to be rhythmically compatible with others of said rhythm break patterns,
player operable select means connected to said memory for selecting a rhythm pattern and for selecting a rhythm break pattern,
selectively operable rhythm pattern access means for accessing said memory means to produce a series of rhythm output signals in the selected rhythm pattern,
selectively operable break pattern access means for accessing said memory means to produce a series of rhythm output signals in the selected break pattern, and
override means for automatically selecting another stored break pattern which is rhythmically compatible with the selected rhythm pattern in place of the player selected rhythm break pattern in the event that the player selected rhythm break pattern is rhythmically incompatible with the selected rhythm pattern.

4,299,155
SUPPORTING CONSTRUCTION FOR KEYBOARD ASSEMBLY
Shinzi Kumano, Hamamatsu, Japan, assignor to Nippon Gakki Seizo Kabushiki Kaisha, Japan
Filed Jun. 4, 1979, Ser. No. 45,336
Claims priority, application Japan, Jan. 6, 1978, 53-076175[U]
Int. Cl.³ G10C *3/02*
U.S. Cl. 84—177 **8 Claims**

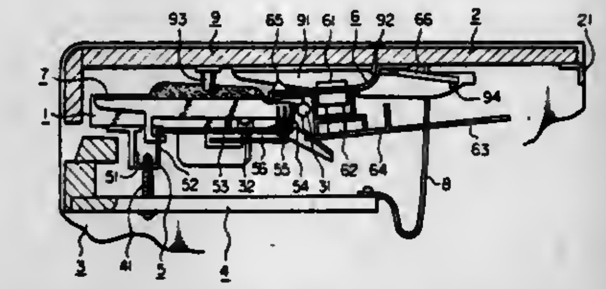

1. Improved supporting construction for a keyboard assembly on an electronic musical instrument comprising an electronic musical instrument including a keyboard assembly,
a frame for bearing said keyboard assembly and said frame being elongated in the width direction of said keyboard assembly, said frame having lateral ends, said musical instrument having side boards beyond said lateral ends,
a pair of key blocks, each being coupled to a respective said lateral end of said frame, each said key block being coupled to an associated said side board of said musical instrument by means of a pivotal engagement therebetween,
said musical instrument having a top board thereover and above said keyboard assembly, said top board having a rear end and a front end, the latter extending toward said keyboard assembly, said instrument also having a front cover placeable over said keyboard assembly and located forward of said top board front end, said top board fixedly carrying a forwardly extending control panel,
first hinges coupling said rear end of said top board of said musical instrument to said side boards in an upwardly turnable arrangement, and
second hinges coupling said rear end of said front cover of said musical instrument to said front end of said top board in an upwardly turnable arrangement.

4,299,156
AXIAL FLOW VALVE
Orla E. Thayer, P.O. Box 473, Waldport, Oreg. 97394
Continuation-in-part of Ser. No. 927,565, Jul. 24, 1978, Pat. No. 4,213,371, which is a continuation of Ser. No. 764,028, Jan. 31, 1977, Pat. No. 4,112,806. This application Sep. 11, 1979, Ser. No. 74,553
Int. Cl.³ G10D *9/04*
U.S. Cl. 84—390 **17 Claims**

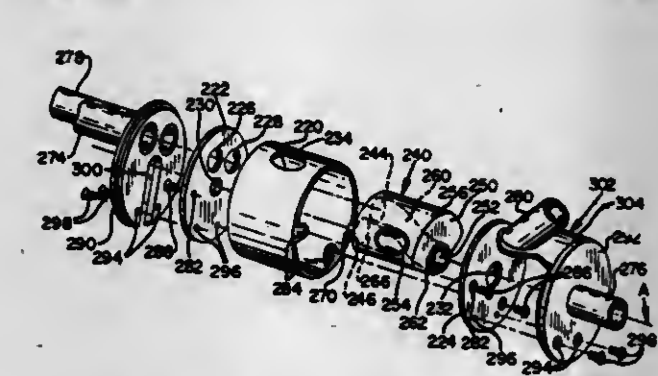

1. A musical wind instrument comprising:
a lead pipe having a mouthpiece at one end thereof;
a main bore terminating in an instrument bell;
a slide loop;
a casing having two opposite ends and a body wall extending therebetween, said lead pipe and one end of said loop being connected to one of said opposite ends, said main bore being connected to the other of said opposite ends, and the other end of said loop being connected to said body wall;
a rotor rotatable in said casing having a primary rotor passage which directly connects said lead pipe to said main bore when said rotor is in a first position and which connects said one end of said loop to said main bore when said rotor is rotated to a second position, said rotor also having a secondary rotor passage which connects said lead pipe to said other end of said loop when said rotor is in said second position.

4,299,157
CONTROLLED TENSION DEVICE
Dallas D. Burns, Brooklyn Park, Minn., and Jack D. Brannan, Springfield, Mo., assignors to The United States of America as represented by the Secretary of the Navy, Washington, D.C.
Filed Dec. 26, 1979, Ser. No. 106,790
Int. Cl.³ F41F *5/02*
U.S. Cl. 89—1.5 D **7 Claims**

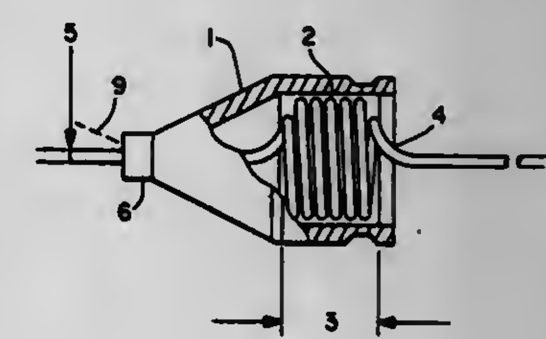

1. An arming wire device comprising:
a housing having a forward and an aft end;
an orifice in said forward end of said housing;
a coil of wire within said housing said coil of wire having an extractor end extending through said orifice to permit a pulling force to be applied thereto to extract said wire from said housing and having an output end.

4,299,158
LAST ROUND DETECTION DEVICE
Anthony J. Aloi, Richmond, and Robert J. Fritz, Burlington, both of Vt., assignors to The United States of America as represented by the Secretary of the Air Force, Washington, D.C.
Filed Nov. 26, 1979, Ser. No. 97,462
Int. Cl.³ F41D *10/26, 10/30*
U.S. Cl. 89—137 **6 Claims**

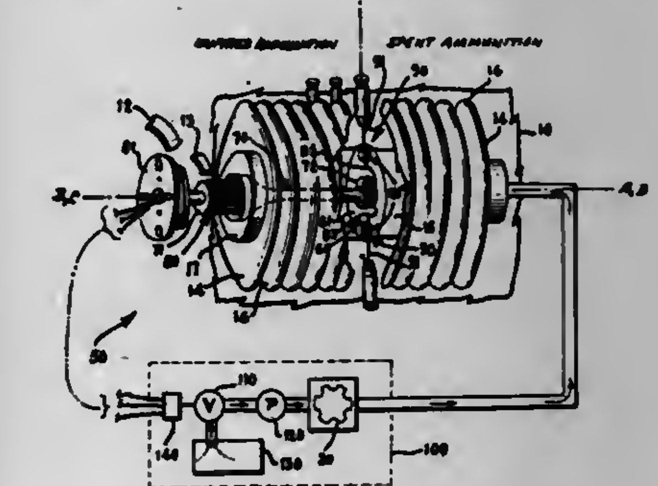

1. A last round detection device for use with an ammunition storage drum for a modern multi-barrel high rate-of-fire machine gun, wherein said ammunition storage drum contains unfired ammunition rounds for said gun, including a last round,

and wherein each said round of unfired ammunition includes a case member and a nose member releasably fitted to said case member, and also wherein said ammunition storage drum has a longitudinal axis and an ammunition exit unit and includes an exit drum cover, an exit scoop disc, and an internally disposed rotatable helix which is rotated and operated by a power means and which has a core with convolutions carrying said unfired ammunition rounds, including said last round, and further wherein said ammunition storage drum is operatively connected to a means for handling and transporting said unfired ammunition rounds, including said last round, to said gun and for handling and transporting case members of spent ammunition rounds from said gun to said ammunition storage drum and to said helix convolutions, comprising:

a. support means disposed internal of said helix and connected thereto;

b. a tube assembly having a first end, a second end, and a longitudinal axis, with said tube assembly disposed such that said longitudinal axis of said ammunition storage drum and said longitudinal axis of said tube assembly are coincident, wherein said tube assembly extends through said exit scoop disc and inwardly into said ammunition storage drum and into said helix, and is attached to said support means by said second end;

c. a self-contained electrical slip ring assembly releasably secured to said exit drum cover, with said slip ring assembly inserted into said tube assembly through said first end thereof, and linked to said power means for rotating and operating said helix;

d. and, a plurality of means for sensing the presence and absence of a nose member of a round of unfired ammunition in said helix convolutions, with each one of said plurality of nose member sensing means mounted on said support means internal of said helix, disposed at a preselected angle to each other, and also disposed such as to monitor said helix core in between said helix convolutions for a nose member of a round of unfired ammunition, with each one of said plurality of nose member sensing means in electrical connection with said self-contained slip ring assembly;

whereby, as long as any one of said plurality of nose member sensing means senses the presence of a nose member, including said nose member of said last round, power to said helix is continued and said helix rotates and operates, and whereby when said plurality of nose member sensing means all simultaneously sense the absence of a nose member and thereby verify that said last round has passed all of said sensing means, all said sensing means signal said absence of a nose member, thereby resulting in cut off of power to said helix which then ceases to rotate and to operate, and thereby any case member of a spent ammunition round is prevented from being chambered into said gun.

4,299,159

DIAPHRAGM CAPSULE FOR PRESSURE MONITORS

Wolfgang Förster, Neunburg, Fed. Rep. of Germany, assignor to Elektromanufaktur Zangenstein Hanauer GmbH & Co., Zangenstein, Fed. Rep. of Germany

Filed Oct. 5, 1979, Ser. No. 82,259

Claims priority, application Fed. Rep. of Germany, Oct. 13, 1978, 7830603[U]

Int. Cl.³ F16J *3/02*

U.S. Cl. 92—98 R **1 Claim**

1. A diaphragm capsule for pressure monitors comprising in combination:

a. a capsule body;

b. a capsule cap; and

c. a diaphragm;

wherein said capsule body is formed with an annular shoulder; said capsule cap is integrally cast or injection molded of plastic material with a ring portion which includes a plurality of segments separated from each other by slots and each having a nose portion on the inner side thereof; said diaphragm includes an edge disposed and clamped between said capsule body and said capsule cap; said ring portion being operable to hold said capsule body, said capsule cap, and said diaphragm together in assembled condition with said nose portions engaged over said annular shoulder and the respective segments of said nose portions being in resiliently stressed condition, said ring portion and said capsule cap being integrally connected to each other by webs disposed above the slots separating said segments and leaving free spaces which in a plane parallel to said diaphragm are at least as large as the dimensions of the respective nose portions extending therebeneath in a plane parallel to said diaphragm.

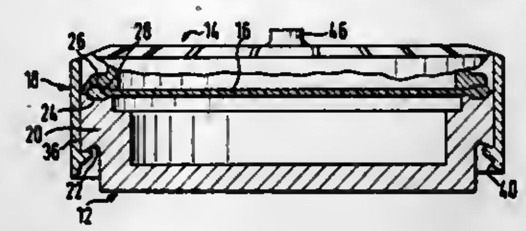

4,299,160

CORN POPPER

Glenn F. Wokeck, Geneva, Mich., assignor to Bangor Plastics, Inc., Bangor, Mich.

Filed Jan. 28, 1980, Ser. No. 116,363

Int. Cl.³ A23L *1/18*

U.S. Cl. 99—323.5 **5 Claims**

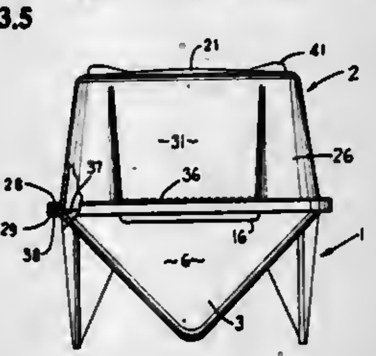

1. A receptacle in which to pop corn in a microwave oven comprising:

bowl means having four first side walls converging downwardly substantially to a point and defining at their upper edges an elongated rectangular rim, said side walls comprising a material through which microwaves can pass freely;

leg means secured to said bowl means for supporting same;

cover means having a rectangular top wall and four downwardly extending second side walls comprising a material through which microwaves can freely pass, and having a rectangular support member at the lower edges of said second side walls, a downwardly facing surface on said rectangular support member snugly engageable with said rim on said bowl means and a pair of spaced, substantially parallel flanges extending around and projecting downwardly from said support surface, said rim being receivable between said flanges, whereby the innermost flange serves as a drip lip.

4,299,161

RING AND SNAP-ON RING FOR PREVENTING BUCKLE OF BEER CANS

George J. Collias, Oak Park, Ill., assignor to Kepros-Ganes Company, Oak Park, Ill.

Continuation-in-part of Ser. No. 940,563, Sep. 8, 1978, Pat. No. 4,219,578, and a continuation-in-part of Ser. No. 101,580, Dec. 12, 1979, Pat. No. 4,255,457. This application Mar. 28, 1980, Ser. No. 134,956

Int. Cl.³ A23L *3/04*

U.S. Cl. 99—369 **7 Claims**

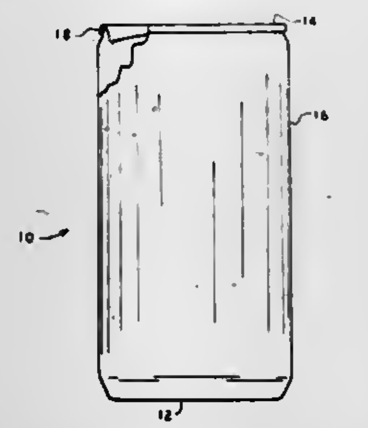

1. An anti-buckler for preventing buckling of the seamed top of a beer can when the canned beer is heat treated during pasteurization comprising:

a ring having a circumferentially extending outer flange and a base portion extending radially inwardly of the outer flange, said outer flange and said base portion being dimensioned such that the ring is adapted to slip onto the top of a beer can with the base portion of the ring at least closely adjacent the top of the seam and the outer flange portion of the ring holding the seam from radial displacement, whereby the ring prevents the top of the can from buckling in response to high internal can pressure present during pasteurization.

4,299,162

CONTROLLED DEFLECTION ROLL SYSTEM

Werner Hartmann, and Karl-Heinz Küsters, both of Krefeld-Forstwald, Fed. Rep. of Germany, assignors to Eduard Küsters, Krefeld, Fed. Rep. of Germany

Filed Apr. 16, 1980, Ser. No. 140,679

Claims priority, application Fed. Rep. of Germany, Oct. 29, 1979, 2943644

Int. Cl.³ B30B *15/26, 3/04*

U.S. Cl. 100—43 **4 Claims**

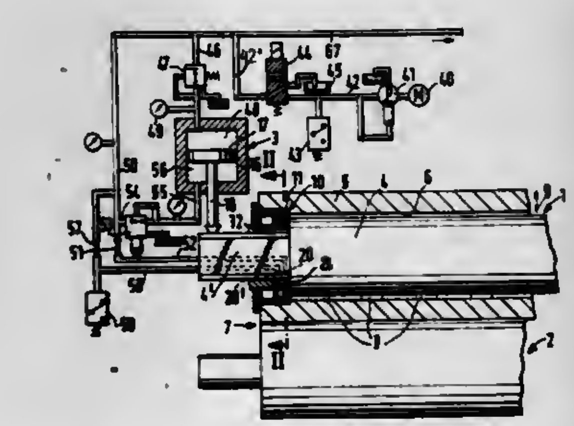

1. A controlled deflection roll system comprising a rotative cylindrical shell having a cylindrical inside and a cylindrical outside adapted to form a nip with a counter roll, a non-rotative shaft extending axially through and radially spaced from the shell's inside and having projecting ends extending beyond the shell's ends and free to radially displace relative to the shell in the direction of the nip, controllable means for applying variable force to the shaft's extending ends in a direction towards the nip, means for applying in said direction uniformly throughout the roll's length force transmitted from the shaft to the roll's inside, and automatic means automatically responsive to radial displacement of at least one end of the shaft relative to the shell for controlling said controllable means so as to hold the shaft at a predetermined position radially relative to the shell when the shell's outside forms a nip with a counter roll.

4,299,163

HIGH SPEED CONDUCTOR CODING APPARATUS

Jerald C. Raahauge, Escondido, Calif., assignor to Formulabs Industrial Inks, Incorporated, Escondido, Calif.

Filed Jun. 12, 1979, Ser. No. 47,764

Int. Cl.³ B41F *17/10*

U.S. Cl. 101—36 **14 Claims**

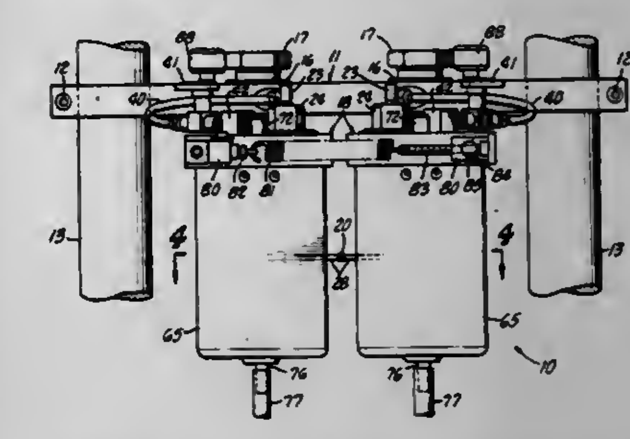

1. Apparatus for imprinting an insulated conductor at a rate of hundreds of feet per minute comprising:

means rigidly supporting a horizontally disposed main support across the upper end of said apparatus;

a pair of printing discs with concave indicia-bearing conductor-engaging peripheries, said printing discs being suspended on upright shafts journaled in bearings mounted in separate overlying brackets carried by said main support and at least one of which is pivotally mounted thereon;

means biasing said brackets toward one another to press said discs against the opposite sides of a conductor so as to be rotated by the conductor as it is pulled therepast;

means for applying a liquid printing agent to the indicia in the concave peripheries of said discs; and

separate shroud means underlying and carried by a respective one of said brackets and substantially enclosing a respective one of said printing discs and each having a slot in the sidewall thereof through which a rim portion only of these associated disc projects.

4,299,164

SQUEEGEE FOR SCREEN PRINTING MACHINE

Thomas M. Joakers, Nijmegen, Netherlands, assignor to Stork Brabant B.V., Boxmeer, Netherlands

Filed Aug. 20, 1979, Ser. No. 68,082

Claims priority, application Netherlands, Nov. 14, 1978, 7811246

Int. Cl.³ B41F *15/08*

U.S. Cl. 101—120 **2 Claims**

1. A squeegee device for pressing a dye paste through a screen of a printing machine, particularly a rotary screen printing apparatus, for printing a web of material and comprising an adjustable stationary element, a resilient blade having one edge mounted from said stationary element and having a free edge directed toward a screen such that the distance between said mounted and free edges is fixed, an edge strip of a wear-resistant plastic material mounted on said free edge of said resilient blade and engageable with said screen to to press dye paste therethrough during printing, said edge strip defining a nip angle with said screen and having an invariable shape and a smooth and hard surface, and a resilient hollow cushion con-

taining a fluid under pressure interposed between and contacting said resilient blade and said edge strip on one hand and a portion of said stationary element on the other hand to support resiliently said edge strip with respect to the stationary element

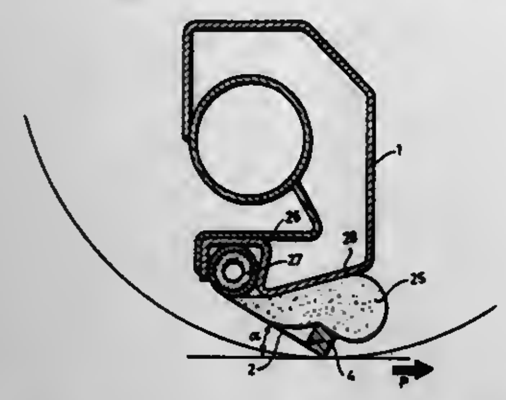

of the squeegee device whereby variation of fluid pressure within said hollow cushion exerts a force against said edge strip to vary the contact pressure of said edge strip upon said screen while the nip angle remains constant.

4,299,165
COLOR SEPARATION ORIENTATION GAUGE AND METHOD
Steven F. Nichols, Pekin, and Lawrence O. Lulay, Peoria, both of Ill., assignors to C & H Printing, Peoria, Ill.
Filed Feb. 22, 1979, Ser. No. 13,987
Int. Cl.³ B41F *33/00, 29/08*
U.S. Cl. 101—150 **2 Claims**

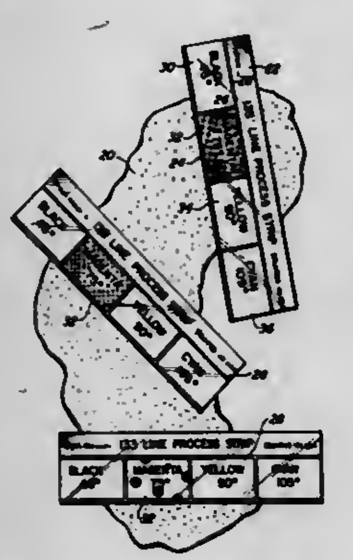

1. A screen angle gauge for use in color printing comprising a strip of translucent relatively rigid material, a straight horizontal reference line inscribed on said material, four separate areas, each area containing the same predetermined number of opaque half tone dots per square inch, each area separately formed on said material, each area having said dots in alignment at different angles to said reference line in accordance with the moire pattern associated with the colors magenta, cyan, yellow and black, a legend for each of said areas denoting the associated color, and a legend for each area denoting the different angle from the horizontal associated with each of the colors, and defining means for the gauge to be aligned with the horizontal reference line on a half tone color separation of predetermined half tone dot size for any of the colors magenta, cyan, yellow and black.

4,299,166
CONTAINMENT AND RELEASE DEVICE FOR FLUIDS
Donald J. Carignan, Chelmsford, and William Lewis, Andover, both of Mass., assignors to The United States of American as represented by the Secretary of the Air Force, Washington, D.C.
Continuation-in-part of Ser. No. 866,741, Jan. 3, 1978, abandoned. This application Nov. 21, 1979, Ser. No. 96,720
Int. Cl.³ F24B *11/24*
U.S. Cl. 102—501 **4 Claims**

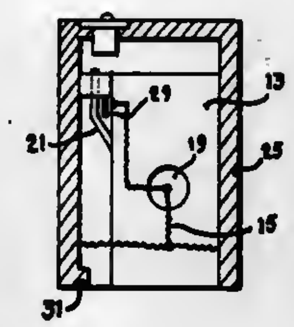

1. A device for controllably releasing pyrophoric fluids and the like from an aircraft comprising, a dispenser having a substantially open lower end, a hermetically sealed canister in said dispenser, said canister holding a quantity of pyrophoric fluid therein, means for ejecting said canister from the open lower end of said dispenser, a series of covered openings in the walls of said sealed canister, said openings being covered with a self-alloying metallic material, a wire braid of self-alloying material interconnecting the series of covered openings for producing an exothermic reaction to cause the material covering said openings to be consumed, and means for igniting the wire braid of self-alloying material at the proper time whereby said pyrophoric material is released and ignited in a controlled manner after said canister is ejected from said dispenser and openings in said canister have been uncovered.

4,299,167
NONELECTRIC DELAY INITIATOR
Paul J. Bryan, Hewitt, N.J., assignor to E. I. Du Pont de Nemours & Co., Wilmington, Del.
Filed Apr. 28, 1980, Ser. No. 144,535
Int. Cl.³ F42B *3/10*
U.S. Cl. 102—202.3 **12 Claims**

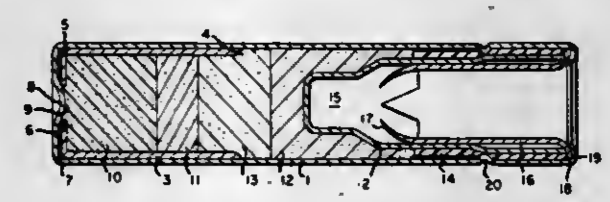

1. A nonelectric delay initiator comprising a first tubular metal shell integrally closed at one end and containing, in sequence from the closed end:
(a) a percussion-sensitive ignition charge;
(b) a tubular metal capsule having one open extremity and a closure at the other extremity provided with an axial orifice therethrough, said capsule being nested within said first shell with its closed end innermost and seated against said ignition charge, substantially all of said ignition charge being wedged between said first shell and said capsule;
(c) a delay charge of an exothermic-burning composition within said capsule at the orifice-containing closed end thereof;
(d) a priming charge of a heat-sensitive detonating explosive composition within said capsule and adjacent to said delay charge;
(e) a second tubular metal shell integrally closed at one end

and positioned coaxially within said first shell in a manner such as to produce an annular spacing around said second shell; and
(f) a main charge of a detonating explosive composition in said annular spacing and between the closed end of said second shell and said priming charge;
means being provided for sealing off said charges from the atmosphere and for preventing the venting of gases resulting from the burning of said ignition and delay charges, an open cavity extending from one end to the other of said second shell for receiving a low-energy detonating cord adapted to be detonated by the pressure pulse applied thereto by the detonation of the main charge adjacent to said second shell, and said cavity being provided with a cord-retention means for holding said cord coaxially therein.

4,299,168
RESISTANCE AFTER FIRING PROTECTED ELECTRIC MATCH
Arsenio P. Montoya, Albuquerque, N. Mex., assignor to The United States of America as represented by the United States Department of Energy, Washington, D.C.
Filed Mar. 20, 1980, Ser. No. 132,356
Int. Cl.³ F42C *13/00*
U.S. Cl. 102—202.11 **7 Claims**

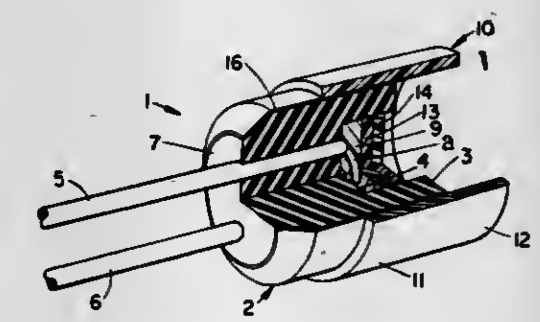

1. An electric match for use in a thermal battery including a body having an outer circumference, opposed flame-producing and other outer end surfaces and a cavity extending from said flame-producing end surface to a bottom surface; at least a pair of conductive means for conducting electricity from outside said body to the cavity; a bridgewire adjacent said bottom surface interconnecting said conductive means; flame-producing means adjacent said bridgewire for ignition thereby; and a length of heat shrinkable tubing including a portion encircling said outer circumference and a normally open skirt portion projecting beyond said flame-producing end surface for folding radially inwardly over said surface to substantially cover said cavity and conductive means in response to heat from ignition of said flame-producing means and thermal battery.

4,299,169
GENERATOR FOR A SPIN PROJECTILE HAVING A GUIDE BAND
Peter Weldner, Breitenbrunn, and Dietmar Stützle, Lauf, both of Fed. Rep. of Germany, assignors to Diehl GmbH & Co., Fed. Rep. of Germany
Filed Feb. 4, 1980, Ser. No. 118,202
Claims priority, application Fed. Rep. of Germany, Feb. 7, 1979, 2904502
Int. Cl.³ F42C *11/02*
U.S. Cl. 102—210 **3 Claims**

1. In a generator for the generation of electrical ignition energy including a spin projectile having a guide band; and a piezo element in said spin projectile, said guide band being deformed upon entry of said projectile into the riflings of a weapon barrel; the improvement comprising: said piezo element being a tubular member polarized radially relative to the longitudinal axis of said projectile, the outer circumference of

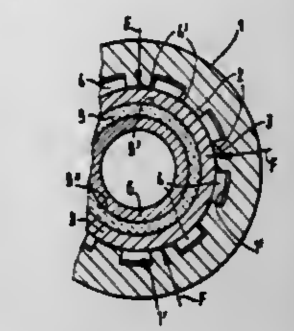

said piezo element being positioned against the shell of said projectile.

4,299,170
DEVICE FOR SIMULATING HITS ON ARMORED VEHICLES AND SIMILAR TARGETS
Ernst Dix, Schiffdorf; Gerhard Müller, Langen-Neuenwalde; Hans Nötzel, Bremerhaven; Willy Walther, Bremerhaven, and Detlef Zahn, Bremerhaven, all of Fed. Rep. of Germany, assignors to Comet GmbH Pyrotechnik Apparatebau, Fed. Rep. of Germany
Filed Sep. 17, 1979, Ser. No. 76,378
Claims priority, application Fed. Rep. of Germany, Sep. 21, 1978, 2841059
Int. Cl.³ C06D *1/04*
U.S. Cl. 102—355 **4 Claims**

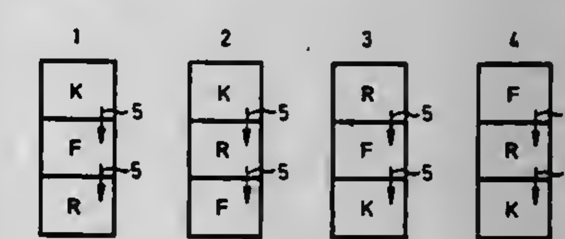

1. A firing device for indicating hits on targets particularly on armored, wheeled or tracklaying vehicles so as to simulate hits on an assumed adversaries target, comprising a housing having a plurality of separate spaced apart charge-receiving chambers therein, at least one of said chambers containing a distinct first signal charge composition and at least one of the other of said chambers containing at least one second signal charge composition, said first and second signal charge compositions being disposed in spaced relationship to each other, means for igniting the first charge composition, and pyrotechnical propagation charge means disposed between the remainder of said signal charge composition and the first signal charge composition for selectively igniting said charge compositions in a controlled sequence, wherein said housing chambers are arranged one behind the other wherein said first signal charge composition comprises a report signal composition, said second signal charge composition including a fireball charge composition arranged behind said report composition and a smoke charge composition arranged behind said fireball composition.

4,299,171
DEMOUNTABLE FLUME AMUSEMENT RIDE
Howard L. Larson, San Mateo, Calif., assignor to Arrow Huss Inc., Mountain View, Calif.
Filed Dec. 26, 1979, Ser. No. 107,142
Int. Cl.³ A63G *21/18*
U.S. Cl. 104—70 **5 Claims**

1. For a water flume adapted to carry a stream of water in which passenger carrying vessels float and are carried thereby, a plurality of flume sections adapted to be connected together in order to form the water flume, each section comprising a

fiberglass trough structure having a floor with opposing walls integrally formed therewith by fiberglass extending upward therefrom along its sides, both ends of said section having a given shaped opening for mating together with other of said sections to form the flume, an underside of the floor containing at least one structural beam extending along a significant por-

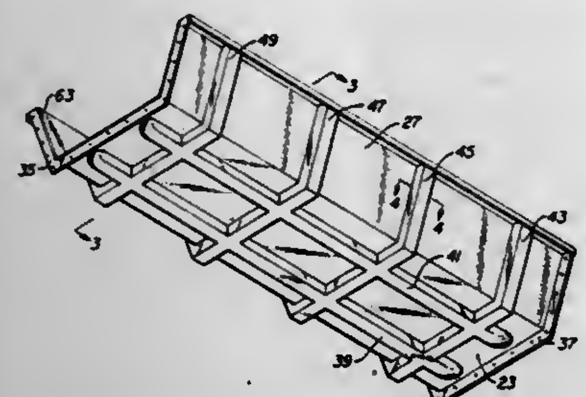

tion of its length and at least one other structural beam extending across the underside of the floor and up the sides outside said trough, each of said beams being formed of fiberglass walls integrally with the section floor and sides and rectangular in cross-section with a non-structural material in a space enclosed by said walls.

4,299,172

STEERING SENSE REVERSING MECHANISM FOR GUIDED VEHICLES

John T. Dawson, Seattle, Wash., assignor to The Boeing Company, Seattle, Wash.

Filed Sep. 26, 1979, Ser. No. 78,638

Int. Cl.³ B61F *9/00*

U.S. Cl. 104—247 **8 Claims**

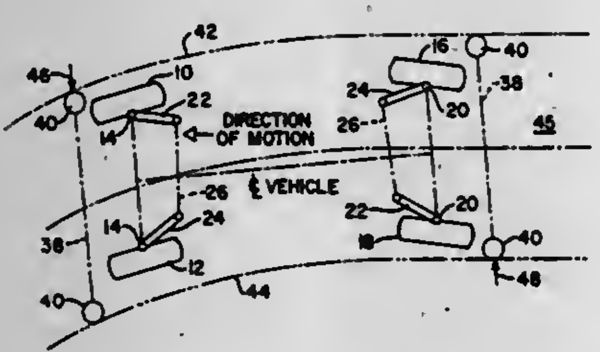

1. In steering apparatus for a vehicle adapted to travel on a guideway having at least one guide means extending parallel to the desired course of the vehicle and wherein the vehicle includes front and rear guideaxle means adapted to follow the guide means together with front and rear wheel assemblies each having a pair of steerable wheels interconnected by tie rod means; the improvement in said steering apparatus of sense reversing mechanisms interconnecting the wheel assemblies with said front and rear guideaxle means respectively and adapted to steer said wheel assemblies in opposite senses in response to movement of the guideaxle means depending upon the direction of movement of the vehicle, said sense reversing mechanisms each comprising:

a steering arm having one end connected to an associated guideaxle means,

a control arm having one end connected to an associated one of said tie rod means, the opposite ends of said steering and control arms being journaled within a gearcase,

gear means within said gearcase for interconnecting said opposite ends of the steering and control arms, and

means for shifting said gear means such that in one position of the gear means clockwise rotation of the control arm will cause clockwise rotation of the steering arm while in the other position of the gear means clockwise rotation of the steering arm will cause counterclockwise rotation of said control arm.

4,299,173

LEVITATION AND GUIDE MECHANISM FOR CURVED TRACK IN INDUCTIVE REPULSION TYPE VEHICLE MAGNETIC LEVITATION AND GUIDE SYSTEM

Kazutaka Arima, and Yoshiyuki Kitano, both of Tokyo, Japan, assignors to Japanese National Railways, Tokyo, Japan

Filed Nov. 14, 1979, Ser. No. 94,317

Claims priority, application Japan, Dec. 28, 1978, 53-161106; Dec. 28, 1978, 53-161107; Dec. 28, 1978, 53-161108; Dec. 28, 1978, 53-161109; Dec. 28, 1978, 53-161110; Dec. 28, 1978, 53-161111; Dec. 28, 1978, 53-161112; Dec. 28, 1978, 53-161113

Int. Cl.³ B61B *13/08*

U.S. Cl. 104—284 **10 Claims**

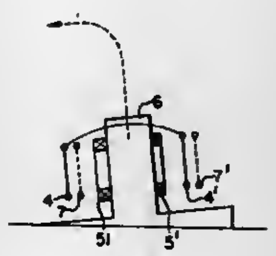

1. An inductive repulsion type magnetic vehicle levitation and guide system, comprising: two parallel rows of levitation conductors having a predetermined time constant with said conductors being at specific intervals along a track in the direction of travel of the vehicle; levitation superconductive magnets mounted on the vehicle in spaced opposed relation to said conductors and electromagnetically coupled with said conductors for levitating the vehicle by the electromagnetic force developed between said conductors and said magnets; guide means extending along the track in the direction of travel of the vehicle; guide conductors having a predetermined time constant and positioned in parallel on said guide means in the direction of travel of the vehicle; corresponding guide superconductive magnets mounted on the vehicle in spaced opposed relation to said guide conductors, said levitation magnets and levitation conductors and guide magnets and the guide conductors along a curved portion of the track being electromagnetically related for producing an electromagnetic repulsive force between at least one magnet and one conductor which is different from the electromagnetic repulsive force between the corresponding magnets and the corresponding conductors on the straight portion of the track and which is in a direction for counteracting the centrifugal force acting on the vehicle passing through the curved portion of the track.

4,299,174

HOPPER CAR COVER SYSTEM

George Piester, 608 N. Kearney Ave., Minden, Nebr. 68959

Filed Mar. 20, 1980, Ser. No. 132,155

Int. Cl.³ B60J *7/00*

U.S. Cl. 105—377 **14 Claims**

1. A removable, rigid, metal roof section adapted to span the width of an open top railway hopper car and to be bolted to at least one another section and to the car to form a complete cover for such a car, the roof section comprising

a. a series of longitudinally spaced, steel rafter plates arranged to extend transversely of said car and which are welded to overlying steel roofing plates to define a roof comprising a horizontal, planar center panal which is flanked by downward sloping, planar panels;

b. a depending, exterior, steel, planar skirt welded to and extending longitudinally along the outer margin of each sloping panel,

c. the exterior skirts being positioned transversely to lie outside the side walls of the car and having heights such that they extend downward below the upper margins of said walls when the roof section is installed on a car;

d. steel support members welded to each sloping panel and having horizontal portions which rest on the upper margins of the side walls of the car and vertical portions which coact with said side walls to limit transverse displacement of the roof section when the latter is installed on a car;

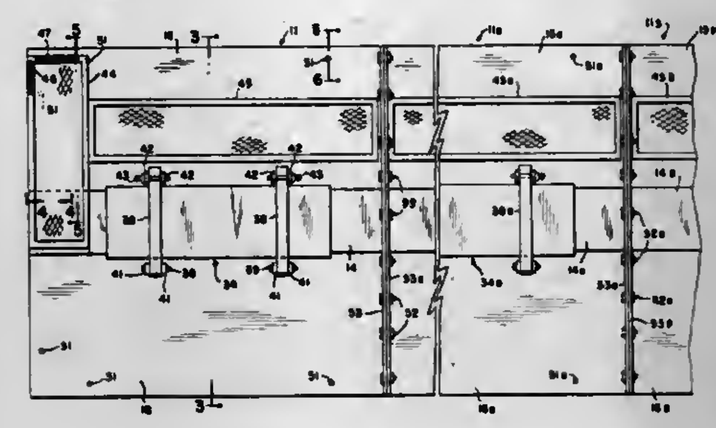

e. a longitudinal series of bolt holes extending through each sloping panel and positioned to lie between the exterior skirt and the adjacent said wall of the car when the roof section is installed on a car;

f. a steel flange extending transversely across and projecting upward from at least one end of the roofing plates and containing a series of bolt holes;

g. a hatchway formed in the center panel and including a hinged cover; and

h. a walkway extending longitudinally along and attached to at least one of the sloping panels.

4,299,175

LOCK CHAMBER FOR THE PASSAGE OF PACKETS OR OBJECTS BETWEEN A ROOM RESERVED FOR THE PUBLIC AND A PREMISES WHICH IS ISOLATED AND PROTECTED FROM THE PUBLIC

Claude P. Bourlier, 3 rue J. F. Belbeoch, 94410 Saint Maurice, and Louis E. Sallot, 9 rue du Général Leclerc, 92270 Bois Colombes, both of France

Filed Feb. 12, 1980, Ser. No. 120,943

Claims priority, application France, Feb. 16, 1979, 79 03963

Int. Cl.³ E05G *7/00*

U.S. Cl. 109—19 **12 Claims**

1. A lock chamber structure for the passage of packets or objects, between one side and the opposite side of a partition wall which defines an opening, the structure comprising a drum which is mounted to be rotatable relative to the partition wall about an axis and comprises two curved walls which are tangent to edges of said opening and are in confronting relation on opposite sides of said axis, said curved walls defining therebetween an access opening for giving access to the interior of the drum and at least one bullet-proof glass viewing window the access opening and the viewing window being capable of being brought selectively in facing relation to and substantially in the plane of said opening in the partition wall by rotation of the drum about said axis, means for controlling the rotation of

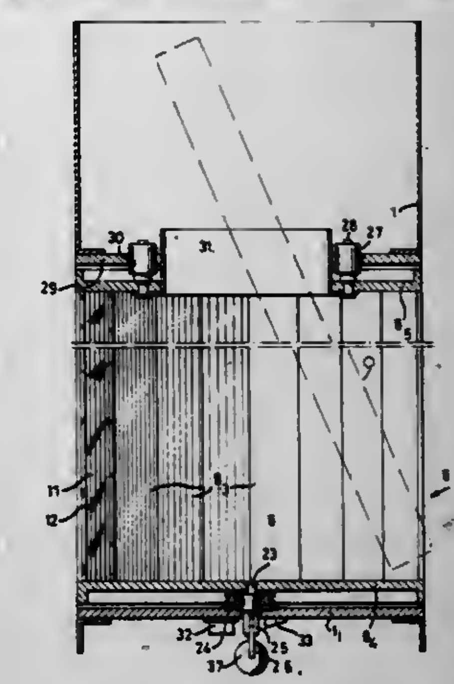

the drum and means for immobilizing the drum in a loading position and in an unloading position.

4,299,176

SAFE PROTECTOR SYSTEM

Mary J. Loeble, Covington, La., assignor to Badger Safe Protectors, Covington, La.

Filed Jan. 14, 1980, Ser. No. 111,777

Int. Cl.³ E05G *1/12*

U.S. Cl. 109—34 **7 Claims**

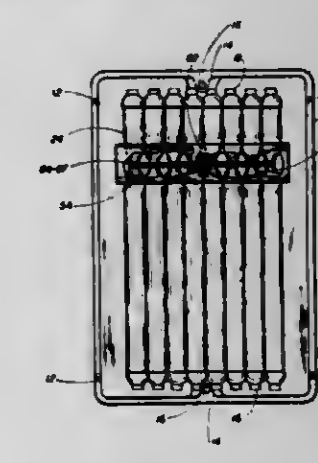

1. A safe protector apparatus comprising:

a. an open face metal base adapted to be fastened to the inside of a safe door having a tumbler in line with which said base is fastened, said metal base having a pull line opening therethrough extending away from the safe door to which said base is attached during operation;

b. a sub-assembly having a pair of moulded rubber mounts containing a series of tube end receiving recess openings;

(c) a plurality of hermetically sealed breakable tubes, each of said tubes containing a repulsive chemical agent and having their ends frictionally fitted respectively into said tube end receiving recess openings;

d. a plurality of pull lines affixed to and extending from the four corners of the inside of the safe door over the attached metal base and connected to said plurality of tubes with said metal base.

4,299,177
STOKER STRUCTURE
Fredrick Mros, 3519 S. 700 East, Salt Lake City, Utah 84106
Filed Jan. 9, 1980, Ser. No. 157,491
Int. Cl.³ F23K *3/00*
U.S. Cl. 110—101 CF **4 Claims**

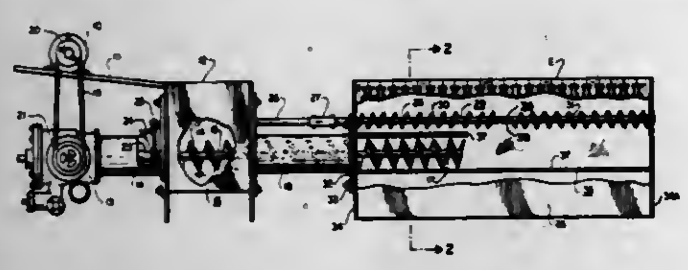

1. Coal-burning structure comprising an air-jet free, solid-fuel-receiving retort trough, free of transverse air jets thereacross, and having opposite upper side edges; means for progressively introducing a stream of coal into said retort trough; means disposed in said trough for leveling received coal therein; a pair of outwardly-downwardly sloping air-perforate combustion beds, respectively disposed adjacent to and on opposite sides of said retort trough, for receiving coal rising within said retort trough and cascading over said trough edges, said combustion beds each comprising a series of elongate tuyeres interspersed ones of which are elevatable within respect to other ones of said tuyeres, said interspersed ones of said tuyeres having outer horizontally-supported ends and inner-upper portions; and movable means for periodically elevating said inner-upper portions of said interspersed ones of said tuyeres, whereby to shear any clinker bed formed thereon.

4,299,178
FURNACE AND HEAT STORAGE ASSEMBLY
John W. Wilson, P.O. Box 291, Bozeman, Mont. 59715
Filed Mar. 10, 1980, Ser. No. 128,968
Int. Cl.³ F23B *7/00*
U.S. Cl. 110—234 **12 Claims**

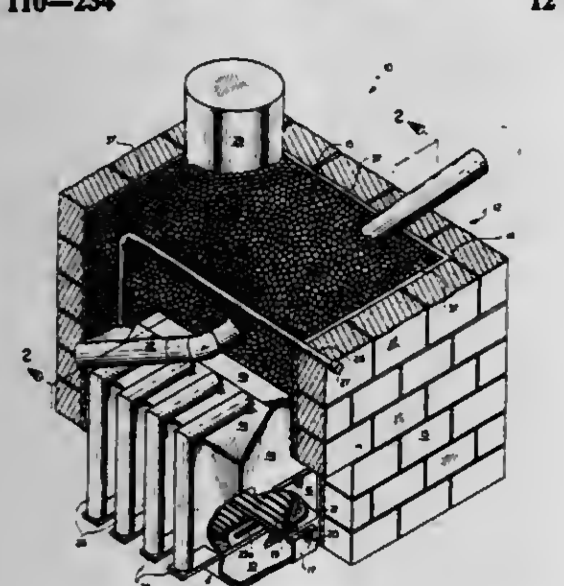

1. A furnace and heat storage assembly comprising:
a firebox with a bottom to support burning of a combustible material therein, and having a top plate to collect unburned combustible gases found in a lighter gas fraction zone above a heavier burned gas fraction zone;
an unburned gas recirculating flue with an open inlet end in communication with the lighter gas fraction zone, and an open exhaust end in communication with the firebox bottom;
fresh air supply means for injecting a supply of fresh air into said firebox to support combustion therein;
means for preheating an air flow through said fresh air supply means prior to its passage into said firebox; and
an exhaust flue for removing the heavier gas fraction from the interior of the firebox having: an open inlet end in communication with the interior of the firebox mounted above the combustible material proximate the heavier burned gas fraction zone, and an exhaust end in communication with the ambient environment.

4,299,179
METHOD AND INSTALLATION FOR SUPPLYING A SEWING MACHINE
Bernard Helffer, Saint Andre-les-Vergers, and Jean-Pierre Raisin, Troyes, both of France, assignors to Agence Nationale de Valorisation de la Recherche (ANVAR), France
Filed Apr. 28, 1978, Ser. No. 901,111
Claims priority, application France, May 11, 1977, 77 14408
Int. Cl.³ D05B *33/00, 81/00*
U.S. Cl. 112—121.12 **10 Claims**

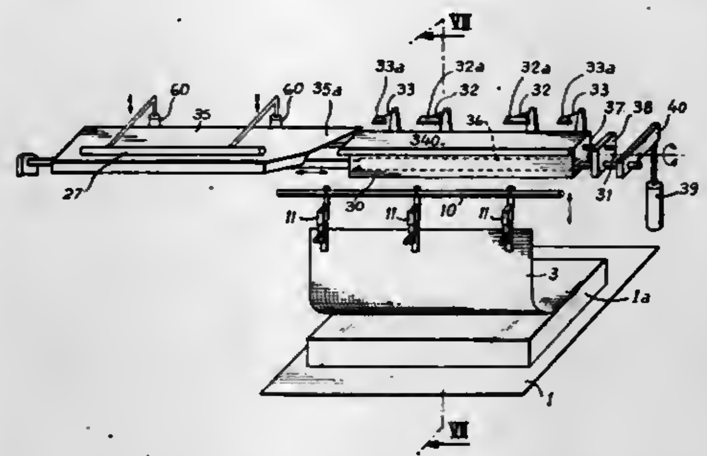

1. A method for supplying elements to a joining machine having a tool for joining at least two flexible elements such as textile pieces and a drive device for moving elements to said tool, comprising the sequential steps of:
(a) manually superposing at least partially said flexible elements so that a predetermined joining zone of one of said elements is superposed with a predetermined joining zone of the other element;
(b) manually presenting said superposed elements to a first predetermined fixed place;
(c) gripping said overlapping zone of said superposed elements at said first predetermined fixed place with a first gripping device;
(d) moving said gripped elements to a second predetermined place with said first gripping device;
(e) gripping said elements at said second predetermined place with a second gripping device;
(f) releasing the flexible elements from said first gripping device;
(g) repositioning said first gripping device to said first predetermined position;
(h) rotating said second gripping device, with said elements therein away from said first gripping device; and
(i) transporting said elements with said second gripping device to said drive device.

4,299,180
ELECTRICAL AUTOMATIC PATTERN STITCHING SEWING MACHINE
Toshiaki Kume, Tachikawa; Toshihide Kakinuma, Tokyo; Hachiro Makabe, Fussa; Kazuo Watanabe, and Hideaki Takenoya, both of Hachioji, all of Japan, assignors to Janome Sewing Machine Co., Ltd., Tokyo, Japan
Continuation of Ser. No. 760,948, Jan. 21, 1977, Pat. No. 4,145,982. This application Oct. 20, 1978, Ser. No. 953,169
Claims priority, application Japan, Jan. 22, 1976, 51-5421
The portion of the term of this patent subsequent to Mar. 27, 1996, has been disclaimed.
Int. Cl.³ D05B *3/02*
U.S. Cl. 112—158 E **4 Claims**

1. In an electrical sewing machine, in combination,
a rotating drive shaft,

a work-feeding unit operative for feeding a workpiece being stitched in a predetermined workpiece-feed direction,
a longitudinally reciprocatable sewing needle driven by the rotating drive shaft and operative during rotation of the drive shaft for periodically penetrating into a stitched workpiece,
the needle additionally being mounted for displacement in the direction transverse to the workpiece-feed direction intermediate successive penetrations of the needle into the stitched workpiece,
the range of transverse displacement of the needle including a left extreme transversely displaced needle setting in which the needle can penetrate into the stitched workpiece, a right extreme transversely displaced needle setting in which the needle can penetrate into the stitched workpiece, and a middle needle setting intermediate the left and right extreme transversely displaced needle settings in which the needle likewise can penetrate into the stitched workpiece,
a needle-shifting unit operative for transversely shifting the needle,
the needle-shifting unit comprising motion-converting means coupled to and driven by the rotating drive shaft and operative for converting the motion of the rotating drive shaft into transverse displacement of the needle to the different needle settings,
the motion-converting means including adjusting means for varying the converted motion produced by the motion-converting means,

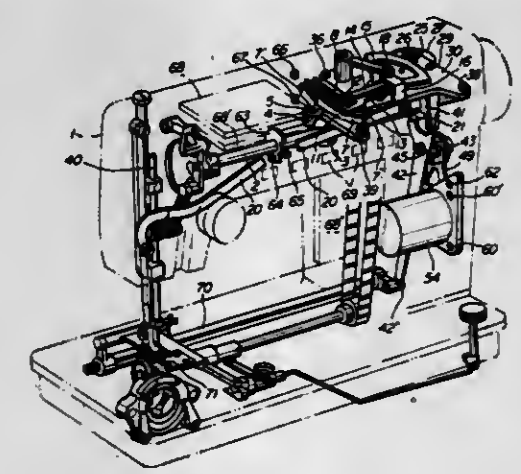

the adjusting means having a range of settings including a first setting causing the motion-converting means to so transversely displace the needle that the needle is at the left extreme needle setting during a penetration of the needle into the stitched workpiece, a second setting causing the motion-converting means to so transversely displace the needle that the needle is at the right extreme needle setting during a needle penetration, and a middle setting causing the motion-converting means to so transversely displace the needle that the needle is in the middle needle setting during a needle penetration,
a stepper motor coupled to the adjusting means for changing the setting of the adjusting means,
the stepper motor being controllable for changing the setting of the adjusting means such that the needle is at needle settings to the left of the middle needle setting during each of a plurality of immediately successive needle penetrations, the stepper motor being controllable for changing the setting of the adjusting means such that the needle is at needle settings to the right of the middle needle setting during each of a plurality of immediately successive needle penetrations, and the stepper motor additionally being controllable for changing the setting of the adjusting means such that the needle is alternately at needle settings to the right of the middle setting and to the left thereof during alternate ones of a plurality of immediately successive needle penetrations,
an electronic memory containing information determinative of the successive settings to which the stepper motor is to move the adjusting means during the course of the sewing of a stitch pattern,
means for effecting read-out of the information in the electronic memory in synchronism with the rotation of the drive shaft, and
motor control circuit means receiving the information from the electronic memory and in dependence thereon controlling the stepper motor to cause the latter to move the adjusting means to the successive settings determined by the information read out from the electronic memory.

4,299,181
BOBBIN THREAD TENSION DEVICE
Stanley J. Ketterer, Jamesburg, N.J., assignor to The Singer Company, Stamford, Conn.
Filed Dec. 6, 1979, Ser. No. 100,760
Int. Cl.³ D05B *57/14, 57/26*
U.S. Cl. 112—184 **1 Claim**

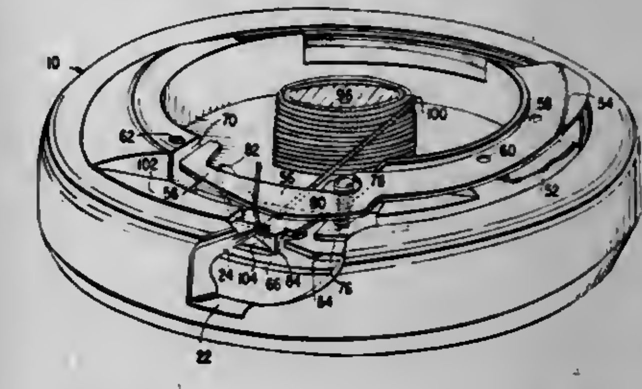

1. A bobbin case for use in a lockstitch sewing machine, the bobbin case being supportable in a rotatable hook with a loop seizing beak and including a cavity within a constraining ring for a rotatable bobbin, the bobbin case also including: a pair of bobbin thread tensioning members on the ring with one of said members spring biased toward the other to apply tension to bobbin thread pulled between the two; and a thread guard which is secured to the bobbin ring; the thread tensioning members being disposed on the ring to cause bobbin thread pulled through the tensioning members from the bobbin for seizure by the hook beak to exit from the said members below and radially inwardly from the path of an advancing end of the hook beak during rotation of the hook, and the guard being engageable with bobbin thread above and radially beyond the advancing end of the hook beak such that bobbin thread exiting from said members and in engagement with the thread guard is positioned for seizure by the hook beak, said thread guard including a support arm with a canted end for removing bobbin thread from the hook beak after seizure thereof by the hook beak.

4,299,182
TWO-WAY OPERATION SYSTEM CONTROL DEVICE FOR SEWING MACHINES
Yoshikazu Tanaka, Hachioji, Japan, assignor to Janome Sewing Machine Co., Ltd., Tokyo, Japan
Filed Jul. 19, 1979, Ser. No. 59,206
Claims priority, application Japan, Jul. 28, 1978, 53-103076[U]
Int. Cl.³ D05B *69/18*
U.S. Cl. 112—277 **4 Claims**

1. A speed control device for a sewing machine comprising a machine drive motor; and a foot controller including a variable resistor providing a variable resistance value to drive the machine drive motor in dependence upon the operation of the foot controller, said foot controller being provided with a plurality of hand-operated means, fixed resistors each specific to and in operative connection with one of said hand-operated means, and a changeover switch, said changeover switch being

displaced to a first position for connecting the variable resistor to the machine drive motor when the foot controller is operated and being displaced to a second position for connecting

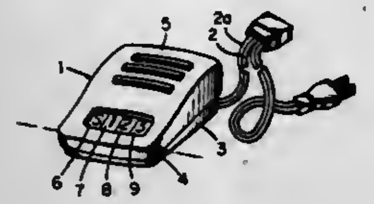

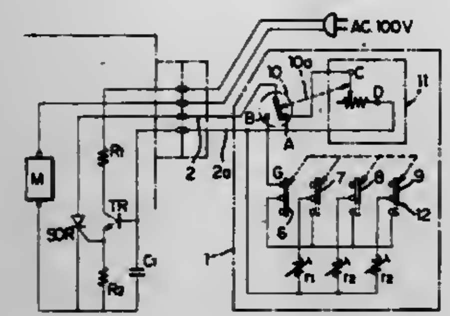

the fixed resistors in circuit with the machine drive motor when the foot controller is released, said hand-operated means being selectively operable to selectively connect respective ones of the fixed resistors to the machine drive motor.

4,299,183

METHOD FOR MOORING A VESSEL TO A PIER OR DOCK

David A. Prock, Salem, Oreg., assignor to Texaco Inc., White Plains, N.Y.

Filed Jan. 5, 1979, Ser. No. 1,243

Int. Cl.³ B63B *21/00*

U.S. Cl. 114—230 4 Claims

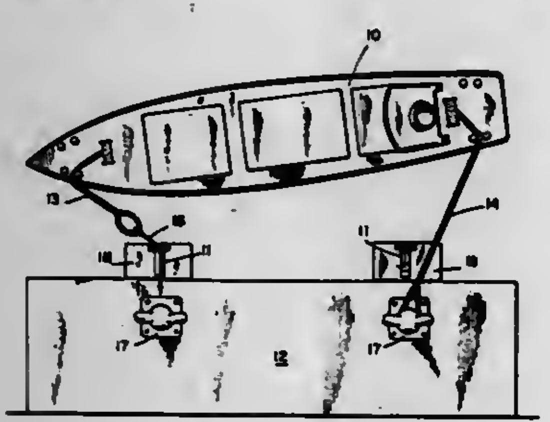

1. Method for mooring a vessel to a pier by means of at least one mooring cable which extends between the vessel and the mooring post on the pier, which method includes the steps of;
- providing a remote end of said mooring cable with a relatively light messenger line,
- providing a mooring cable guide apparatus on said pier including an upstanding messenger line guide means having spaced apart arms which define an aperture adapted to guidably receive the messenger line, and which messenger line guide means is pivotally adjustable between upstanding and lowered positions,
- positioning the messenger line between the spaced apart arms of the guide means,
- guidably drawing said messenger line and the mooring cable from the vessel thereby to engage said mooring cable with said mooring post,
- adjusting the messenger line guide means to a lowered position to displace the messenger line and mooring cable from between the spaced apart arms.

4,299,184

METHOD OF TOWING LARGE MASSES AT SEA

Georges L. Mougin, Paris, France, assignor to ITI, Limited, Paris, France

Filed Nov. 20, 1979, Ser. No. 96,036

Claims priority, application United Kingdom, Feb. 26, 1979, 06661/79

Int. Cl.³ B63B *21/56*

U.S. Cl. 114—253 5 Claims

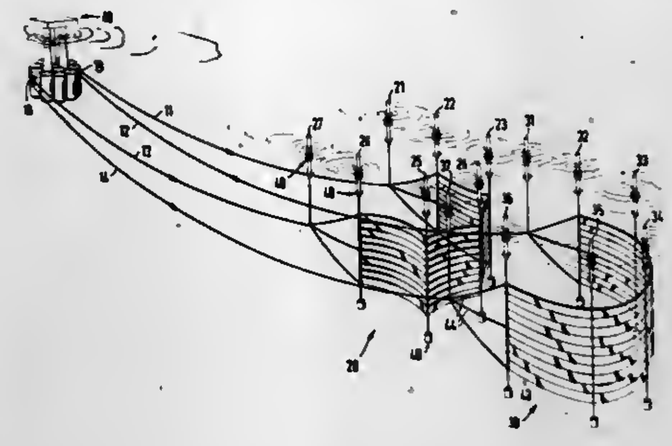

1. A method of towing a large mass at sea, the method comprising the steps of providing the large mass with traction winch means, deploying two sea anchors ahead of the mass in the desired towing direction, providing cable means connecting each of the sea anchors to the traction winch means, and towing the mass in an alternating sequence of traction sessions during each of which one of the sea anchors is winched towards the mass by the winch means winching in the cable means attached thereto and paying out the cable means attached to the other sea anchor, and the other sea anchor being moved forwards as its cable means is payed out to prepare it for the following traction session in which the roles of the sea anchors are interchanged, whereby the pause between successive traction sessions can be limited to the time necessary for reversing the direction of operation of the winch means.

4,299,185

DEVICE FOR WARNING OF IMPENDING ROOF-FALL IN UNDERGROUND EXCAVATIONS

William R. Heffernan, Westfield, N.J.; Mary-Louise Vega, New Hope, and Joel A. Gingras, Sr., Doylestown, both of Pa., assignors to American Cyanamid Company, Stamford, Conn.

Filed Nov. 21, 1979, Ser. No. 96,358

Int. Cl.³ G01L *1/24*

U.S. Cl. 116—202 6 Claims

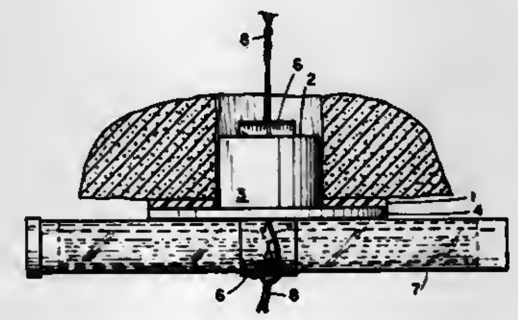

1. A roof-fall warning device comprising: a collar with an inner face for bearing against the mine roof, an outer surface for bearing against a spool flange and a circular center opening through said collar; a spool having a neck and flange, and a center opening extending therethrough coaxial with said neck and flange, the neck of said spool being of a width to fit through the circular center opening of said collar with the inner face of said flange bearing against the outer face of said collar; the center opening in said spool being of square cross-section with flat rectangular sides; a strap of width narrower

than the width of the square cross-section of said opening and of length sufficient to provide a bight in said strap extending outward from the flange end of said spool to receive a light-stick in said bight with the ends of said strap extended into the center opening of said spool; said spool defining paths for two wires to extend along the length of said spool outwardly from said center opening on opposite sides of its square cross-section and inwardly from the widest diameter of said neck; opposed sets of ratchet teeth at the respective faces of the collar and flange, said teeth shaped to slip for rotation of the spool in one direction and to check rotation of same in the opposite direction.

4,299,186

METHOD AND APPARATUS FOR APPLYING A VISCOUS FLUID TO A SUBSTRATE

David J. Pipkin, Longmont, and Donald W. Schaefer, Lakewood, both of Colo., assignors to International Business Machines Corporation, Armonk, N.Y.

Continuation of Ser. No. 961,916, Nov. 17, 1978, abandoned, which is a division of Ser. No. 759,972, Jan. 17, 1977, Pat. No. 4,142,010. This application Jun. 26, 1980, Ser. No. 163,366

Int. Cl.³ B05C *1/04, 3/18*

U.S. Cl. 118—407 3 Claims

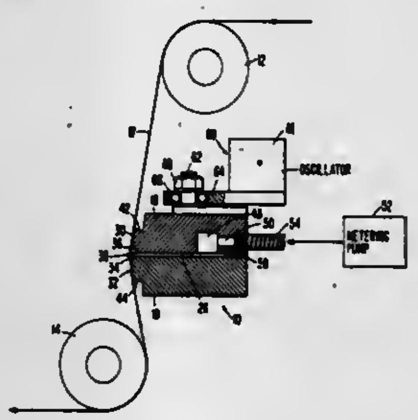

1. A head assembly for applying a smooth coating of a high viscousity liquid to a substrate moved relative thereto, comprising,
- an upstream plate and a downstream plate with means spacing said plates apart defining a passage of uniform dimension therebetween, extending across a major portion of the plates,
- means adapted to communicate between a source of fluid supply and a back portion of said passage,
- a generally V-shaped reservoir communicating with a front of said passage, the reservoir including enlarged portions upstream and downstream of the passage, definedby a slanted face formed in the trailing edge of the upstream plate and a rounded edge formed in the leading edge of the downstream plate,
- said plates otherwise terminating in smooth, wide substrate contacting surfaces bounding the reservoir with the downstream edge of the downstream plate being formed at an acute angle with respect to the smooth surface thereof,
- means for mounting said head assembly for pivotable, self-aligning movement with respect to said substrate, and
- means for moving said head assembly back and forth in an oscillating motion with respect to said substrate.

4,299,187

APPARATUS FOR STRIPING PENCILS

Charles G. Renegar, Shelbyville, Tenn., assignor to Empire Enterprises, Inc., Shelbyville, Tenn.

Continuation of Ser. No. 780,370, Mar. 23, 1977, abandoned. This application Aug. 28, 1980, Ser. No. 181,976

Int. Cl.³ B05C *5/02*

U.S. Cl. 118—411 20 Claims

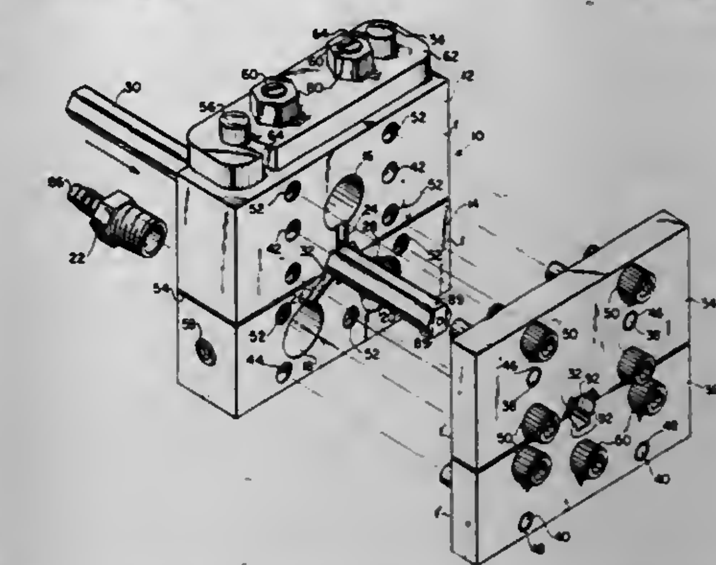

1. A device for striping pencils comprising a block having a passage through which a pencil is moved longitudinally, said passage having circumferentially spaced raised lands for engaging corresponding side regions of the pencil and for guiding movement of the pencil through the passage, means for directing a stream of striping material onto one of said side regions of the pencil as a thin layer having a major dimension extending transversely to said pencil, with said thin layer engaging said pencil and then changing direction by about 90 degrees and flowing longitudinally in the direction of movement of the pencil, said directing means including a reservoir in said block for receiving pressurized striping material, a duct extending from said reservoir and terminating in an elongate orifice in one of said lands, said orifice having its major dimension extending transversely of said passage and a shallow channel in said one of said lands extending from said orifice in the direction of movement of the pencil.

4,299,188

COATING APPARATUS

Shogo Isayama, and Nobumitsu Takehara, both of, Kanagawa, Japan, assignors to Fuji Photo Film Co., Ltd., Minami-ashigara, Japan

Filed Dec. 7, 1979, Ser. No. 101,382

Claims priority, application Japan, Dec. 25, 1978, 53-165011

Int. Cl.³ B05C *5/02*

U.S. Cl. 118—412 6 Claims

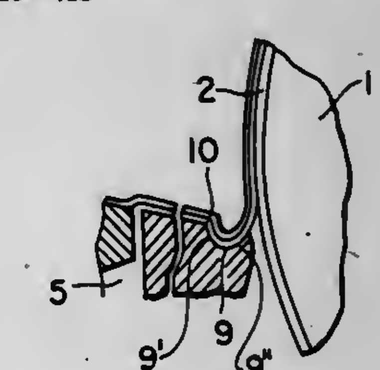

1. In a slide bead coating apparatus having a coating liquid supply to be applied to a web, the improvement comprising; means for forming a slide surface downstream of said coating liquid supply, a groove positioned between said slide surface and said web having a falling part dropping abruptly downwardly at a lower edge of said slide surface and a rising part

extending smoothly upwardly from said falling part, wherein the speed of a layer of coating liquid flowing down said slide surface is increased by said falling part and is smoothly delivered through said rising part extending from said falling part and gradually thinned during passage through said groove to said web to be coated with said layer of coating liquid.

4,299,189
DIPPING DEVICE
Lars Hagberg, Borlänge, and Ake Jonsen, Sundborn, both of Sweden, assignors to Aktiebolaget Indesko, Stockholm, Sweden
Filed May 6, 1980, Ser. No. 147,157
Claims priority, application Sweden, May 11, 1979, 7904154
Int. Cl.³ B05C *3/10;* **B65G** *49/02*
U.S. Cl. 118—675 **5 Claims**

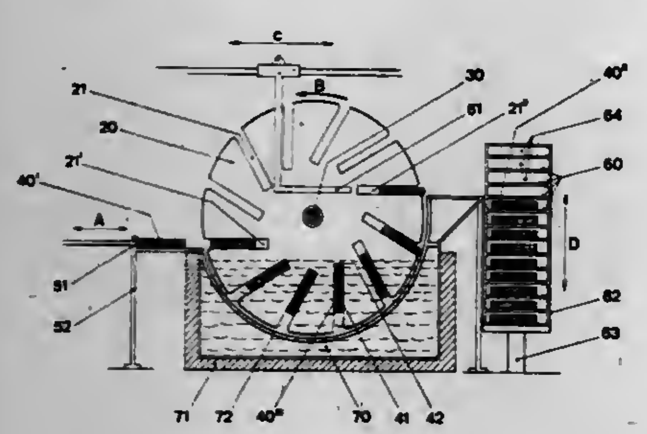

1. Device for dipping plates or similar articles in a liquid, the device comprising a number of disc-like elements secured at a certain distance from each other along a basically horizontally arranged shaft which is rotated, preferably in steps, by a drive device, each element being provided with recesses of a rectangular shape for receiving the plates, every recess being open at the periphery of the corresponding element and being basically oriented towards the center area of the element, the recesses in one element being arranged in line with the recesses in other elements and the elements being partially immersed in a liquid, whereupon the recesses and the plates contained in the recesses completely or partially pass through the liquid when the shaft rotates, characterized in that the rectangular long sides of the recesses are oriented to the side of the shaft and two principally diametrically opposite recesses in the position for the insertion and discharge are thus located either below or above the level of the shaft, and the displacement devices are arranged for inserting the plates at the feed device and ejecting the plates at the receiving device in the longitudinal direction of the rectangular recesses and, wherever applicable, for being able to move between the disc-like elements and to pass the shaft.

4,299,190
LITTER BOX
Andrew Rhodes, 51 Watson Ave., Ossining, N.Y. 10562
Filed Jan. 28, 1980, Ser. No. 116,227
Int. Cl.³ A01K *29/00*
U.S. Cl. 119—1 **10 Claims**

1. A litter handling device comprising a housing including a lower open topped litter box having a bottom wall and a side wall with an animal access opening and an upper open bottomed storage box separable end to end coupled to the top of said litter box and in communication with the interior thereof, a base member disposed below and rotatably supporting said housing for rotation about a transverse axis, a disposable bag disposed in said storage box and having a downwardly directed open end and a peripheral border, said housing having retainer means releasably engaging and retaining said peripheral border spread in an open condition and closure means located in and mounted to said storage box for releasably

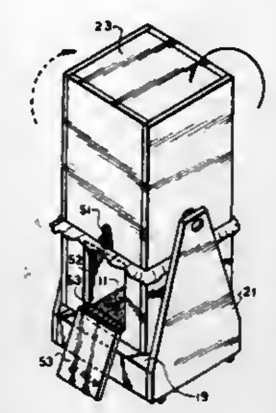

contracting said bag below it spread peripheral border to a closed condition.

4,299,191
CHICK CAGE SYSTEM
Charles A. White, Woodstock, and Eddie L. Holland, Roswell, both of Ga., assignors to U.S. Industries, Inc., New York, N.Y.
Filed Jan. 22, 1980, Ser. No. 114,221
Int. Cl.³ A01K *31/06*
U.S. Cl. 119—18 **13 Claims**

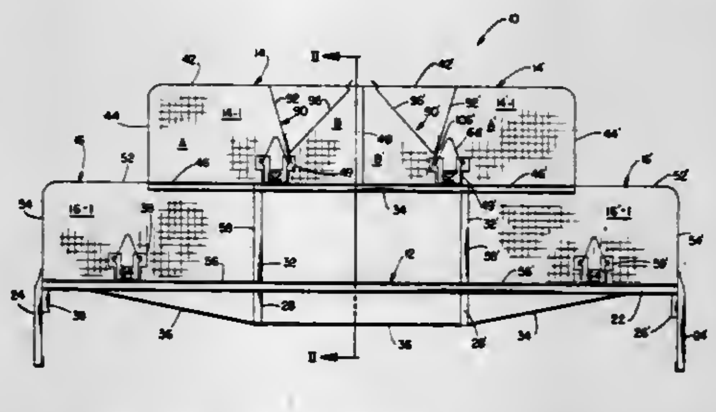

1. A poultry cage system comprising:
first and second upper rows of cages extending generally parallel to and positioned adjacent one another in back-to-back fashion;
first and second lower rows of cages positioned immediately below and extending generally parallel to said upper rows of cages, said lower cages being spaced from one another, each underlying one of said upper rows of cages for approximately one-half of its width, the top of the other half of each of said lower rows of cages being substantially unobstructed;
a feed trough positioned within and extending lengthwise of each of said lower rows of cages, each of said troughs being offset laterally from said upper rows of cages but positioned generally centrally within said lower rows of cages such that droppings from said upper rows of cages will not fall into said feed troughs but birds may feed from either side thereof; and
means to support said cage system above the floor.

4,299,192
CATALYTIC COMBUSTION
Bernard E. Enga, Maidenhead, England, assignor to Johnson, Matthey & Co., Limited, London, England
Filed May 2, 1979, Ser. No. 35,298
Claims priority, application United Kingdom, May 8, 1978, 18242/78
Int. Cl.³ B09B *3/00*
U.S. Cl. 122—4 D **13 Claims**

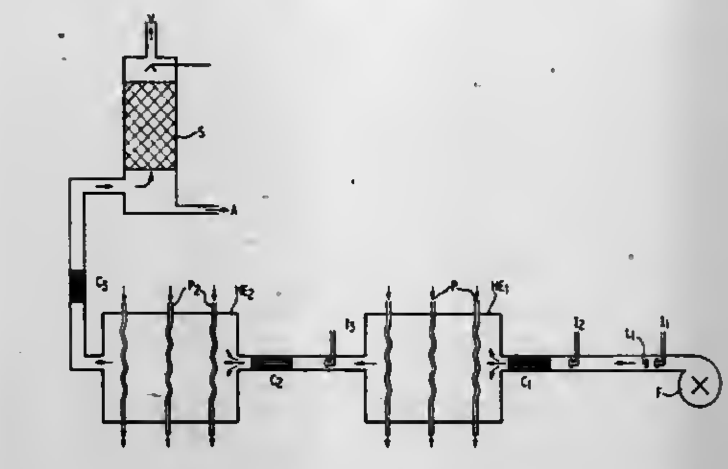

1. A boiler comprising a pilot burner, means for supplying fuel to said pilot burner, and at least two sections each comprising a fuel injector, a catalytic combustor and a heat exchanger, the catalytic combustor in both sections comprising a monolith support which is coated with a wash coat on which a combustion catalyst is deposited.

4,299,193
STEAM-GENERATING PROCESS
Josef Dworschak, Munich, Fed. Rep. of Germany, assignor to Linde Aktiengesellschaft, Wiesbaden, Fed. Rep. of Germany
Filed May 21, 1980, Ser. No. 152,033
Claims priority, application Fed. Rep. of Germany, May 22, 1979, 2920661
Int. Cl.³ F22B *31/00*
U.S. Cl. 122—7 R **12 Claims**

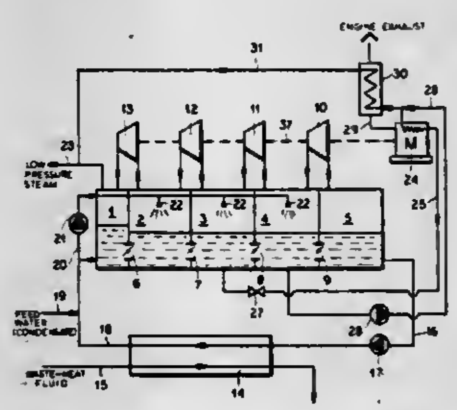

1. A method of generating steam from sensible low temperature waste heat of a carrier fluid, comprising the steps of:
(a) heating feed water under pressure by passing it in heat exchange with said fluid;
(b) expanding the heated feed water in a succession of pressure stages to successively lower pressures thereby producing steam in each of said stages;
(c) compressing the steam of at least each pressure stage with a pressure lower than the highest pressure stage to the pressure of the next higher pressure stage; and
(d) combining the compressed steam from each pressure stage at a pressure lower than the highest pressure stage with steam from the next higher pressure stage.
7. An apparatus for generating steam comprising:
a plurality of pressure stages including a first high pressure stage and a last low pressure stage;
means for heating a feed water under pressure in heat exchange with a waste heat carrying fluid;
means for expanding said heated water in succession in said stages from the first stage to the last stage; and
a respective compressor stage between each succeeding pair of pressure stages for compressing steam from each stage of lower pressure to the pressure of the next stage at higher pressure and combining the compressed steam with the steam of the next stage of higher pressure.

4,299,194
HOT OIL HEATER WITH HELICAL COIL BAFFLE
John H. Miller, Youngstown, Ohio, assignor to Hy-Way Heat Systems, Inc., Youngstown, Ohio
Filed Oct. 29, 1979, Ser. No. 89,255
Int. Cl.³ F22B *13/00*
U.S. Cl. 122—33 **2 Claims**

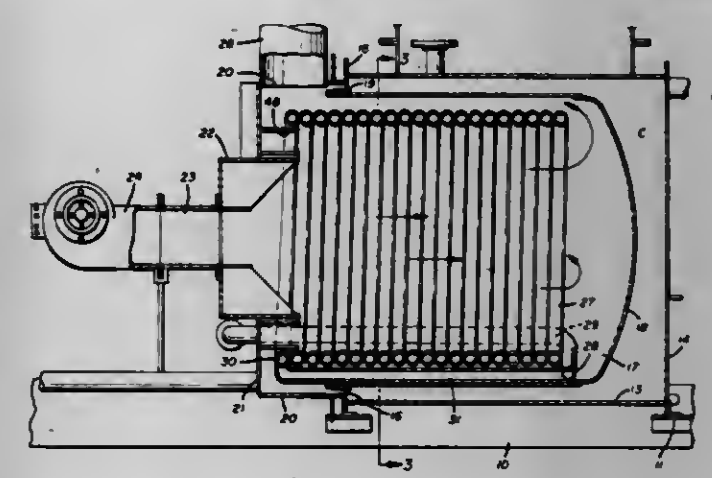

1. The combination in a hot oil heater of a double walled tank, means for circulating oil to be heated between said double walls of said tank and a combined heat exchanger coil and baffle positioned within the area defined by said double walled tank and consisting of a helical coil of tubing the convolutions of which are arranged in engaging side by side relation to form a cylindrical member open at its ends and straight sections of tubing communicating with said coil of tubing and extending in spaced parallel relation from the opposite ends thereof in engaging relation with said convolutions thereof so as to form spaced parallel supports for said helical coil of tubing and acting to support and space the same with respect to said double walled tank in which the combined heat exchanger coil and baffle is positioned, said means for circulating oil being in communication with said straight sections of tubing and means for introducing combustion into said combined heat exchanger coil and baffle and venting the same from said double walled tank, said double walled tank comprising an outer shell and an inner shell arranged in spaced relation to form a fluid chamber therebetween and an annular closure joining said outer shell and inner shell, said combined heat exchanger coil and baffle extending outwardly of said annular closure, a combustion throat engaged in said outer shell in spaced relation to said combined heat exchanger coil and baffle and extending outwardly of said outer shell for introducing the products of combustion into said combined heat exchanger coil and baffle and an opening in said outer shell for venting said products of combustion therefrom, said combined heat exchanger coil and baffle defining a tortuous passageway between said combustion throat and said opening.

4,299,195
ARROW REST ASSEMBLY
John P. Norris, 2160 San Antonio Ave., Alameda, Calif. 94501
Continuation of Ser. No. 534,208, Dec. 19, 1974, abandoned.
This application May 13, 1976, Ser. No. 686,232
Int. Cl.³ F41B *5/00*
U.S. Cl. 124—24 R **4 Claims**

1. An arrow rest assembly comprising rest support means

adapted for installation on a bow in proximity to the point of rest of an arrow to be shot from such bow, an arrow rest having multi-directional flexibility including flexibility in various planes, and means for affixing said arrow rest to said support means with said rest in the normal rest position for an arrow to be shot from such bow, said arrow rest support means including a ferrule adapted for installation transversely of a

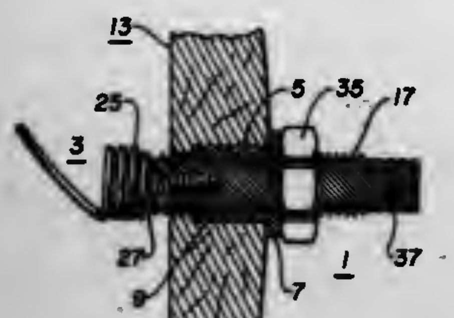

bow and having a threaded longitudinal passageway therethrough, a stem adjustably threaded through said passageway and having a threaded recess at one end, said arrow rest including a coil spring having a tight turn at one end and at its other end, a terminal portion of the end turn extended in a generally longitudinal direction, said spring providing an arrow rest having resiliency in various directions, and means for locking said stem in any of its adjustable positions.

4,299,196

RADIUS DRESSER

John J. Grommes, Farmington Hills, and Karl H. Bekemeler, St. Clair Shores, both of Mich., assignors to Tru-Par, Inc., Warren, Mich.

Filed May 22, 1980, Ser. No. 152,455

Int. Cl.^{3} B24B *53/12*

U.S. Cl. 125—11 AT **8 Claims**

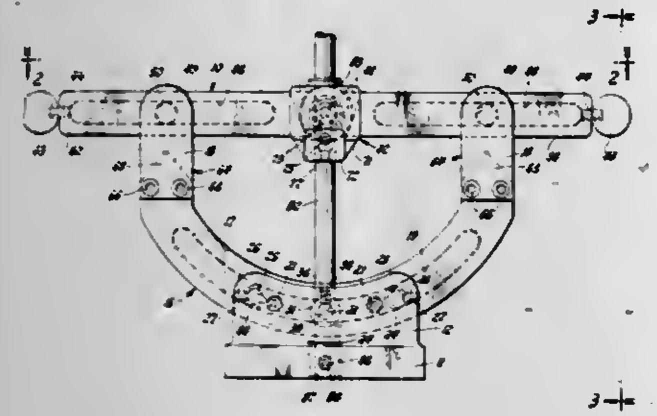

1. A radius dresser for cutting a concave, convex or zero radius on the periphery of a surface grinding wheel, characterized in that the radius dresser includes

(a) a base plate;

(b) a carrier member provided with a pair of vertical arm portions;

(c) means for adjustably mounting the carrier member on the base plate;

(d) a pair of cross arms which each have an outer end and an inner end;

(e) means for slidably mounting one of said cross arms on the upper end of each of said carrier member vertical arm portions;

(f) a horizontally disposed cutting diamond carrier member having an inner end and an outer end;

(g) means for pivotally mounting and releasably locking, on a horizontal pivot axis, the inner ends of the cross arms to the inner end of the diamond carrier member, and to each other in a predetermined angular relationship; and,

(h) a cutting diamond adjustably mounted in the outer end of the diamond carrier member for cutting engagement with the periphery of a grinding wheel, whereby when the cross arms are slid back and forth axially the cutting diamond will cut a predetermined radius on the periphery of the grinding wheel in accordance with the angular relationship of the cross arms to each other.

4,299,197

HEAT RADIATING BURNER FOR USE IN FIREPLACES

Charles E. Turley, 8010 55th Pl., NE., Marysville, Wash. 98270, assignor to Charles E. Turley, Marysville, Wash.

Filed Sep. 17, 1979, Ser. No. 76,269

Int. Cl.^{3} F23H *13/02*

U.S. Cl. 126—165 **4 Claims**

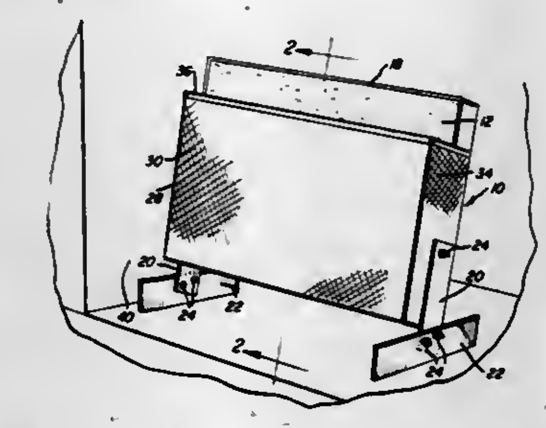

1. In combination with cross-cut slices of log fuel of generally the same thickness, a fireplace heater including an upstanding substantially planar inclined panel assembly having a forwardly and upwardly facing front side and upper and lower marginal edges interconnected at corresponding ends by opposite side marginal edges, said panel assembly being constructed of fireproof heat reflective material, a grill assembly paralleling said panel assembly and stationarily supported relative to the latter in spaced relation forward of said front side to define a narrow combustion chamber between said grill and panel assembly of a front-to-rear depth only slightly greater than the thickness of said slices, said grill including foraminated lower and opposite side marginal portions extending between corresponding lower and side marginal edges of said grill and panel assembly, thereby closing the lower and opposite side marginal portions of said combustion chamber, the upper marginal portion of said panel assembly projecting appreciably above the upper marginal portion of said grill and defining an upper inclined extension of said panel assembly above said grill, thereby enabling cross-cut pressed log sections to be more readily positioned and guided for downward dropping into said combustion chamber, said combustion chamber opening upwardly between the upper marginal portions of said grill and panel assembly and in a direction paralleling said extension and panel assembly, said slices of log fuel being positionable upon said extension for downward guided sliding therealong between said upper marginal portions into said combustion chamber for gravity edge-to-edge stacking within said combustion chamber, said panel assembly, grill and combustion chamber being slightly rearwardly and upwardly inclined, said heater including lower foot means for supporting said heater from a fireplace hearth with said panel assembly maintained in the aforementioned inclined position.

4,299,198

WIND POWER CONVERSION AND CONTROL SYSTEM

William M. Woodhull, 1815 Ridge Rd., Ontario, N.Y. 14519

Filed Sep. 17, 1979, Ser. No. 76,370

Int. Cl.^{3} F28D *15/00*

U.S. Cl. 126—247 **5 Claims**

1. A wind power system including:

a wind rotor disposed to convert wind energy to mechanical energy at a rate in accordance with the relationship

$$W_{rotor} \propto N^3 \propto V^3$$

wherein W is rotor power, N is rotational speed, and V is wind velocity,

a positive displacement hydraulic pump operatively connected to said wind rotor to motivate fluid through a hydraulic fluid system and thereby to convert said mechanical energy to hydraulic energy at a rate in accordance with the relationship

$$W_{pump} \propto N^3$$

wherein W is pump power and N is rotating speed,

an orifice in said hydraulic system to convert said hydraulic energy to thermal energy at a rate in accordance with the relationship

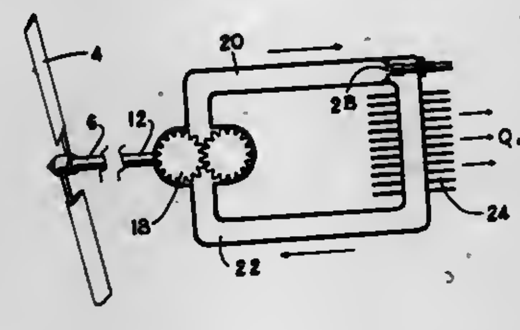

$$W_{heat} \propto Q\,\Delta P \propto N^3$$

wherein W heat is thermal power, Q is volume flowrate of fluid in said hydraulic system and ΔP is pressure drop across said orifice,

said orifice being sized to create an optimum hydraulic load on said pump and rotor such that said rotor rotates at a substantially constant optimum ratio of rotor tip speed to wind velocity in accordance with the relationship

$$N \propto V$$

wherein N is rotor speed and V is wind velocity.

4,299,199

METHODS OF AND APPARATUS FOR HEATING FLUID MATERIALS

Joseph M. Girone, Richmond, Va., assignor to Process Engineering Incorporated, Richmond, Va.

Filed Mar. 29, 1978, Ser. No. 891,221

Int. Cl.^{3} F24J *3/02*

U.S. Cl. 126—420 **6 Claims**

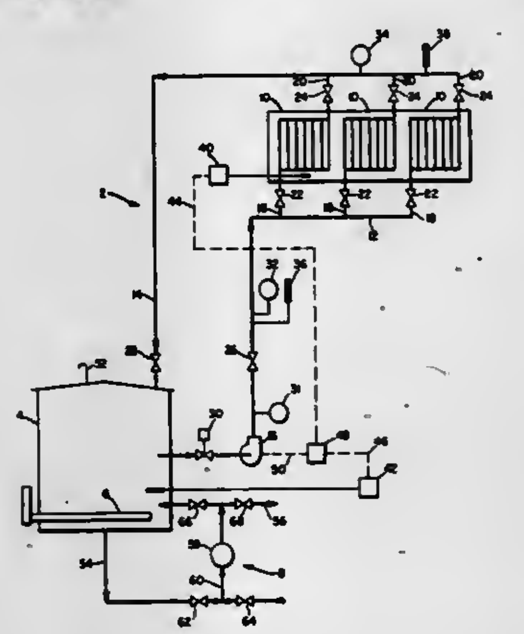

1. A system for maintaining a bulk stored fluid material at a preselected temperature which comprises: bulk storage means; solar collector means; means including a first pump means and first conduit means for circulating the fluid material from said storage means and to and through said solar collector means; control means for terminating the circulation of fluid material and then effecting the draining of said conduit means and said solar collector means when the availability of solar energy falls below a selected level in order to keep the material from solidifying in said solar collector means, first pump means and first conduit means, said control means also having means for automatically initiating the circulation of the fluid material to said solar collector means when the availability of solar energy reaches said selected level; auxiliary heating means for the fluid material in said bulk storage means for supplementing the energy made available to the fluid material via said solar collector means to maintain the fluid material at said preselected temperature; and recirculating means, separate and distinct from said solar collector means, first pump and first conduit means, comprising a second pump and second conduit means for periodically circulating fluid from said storage means through said second pump and back to said storage means to thereby assure an even temperature throughout the quantity of fluid material in said storage means.

4,299,200

APPARATUS AND METHOD FOR COLLECTING SOLAR ENERGY

Donald L. Spencer, Iowa City, Iowa, assignor to University of Iowa Research Foundation, Iowa City, Iowa

Filed Dec. 12, 1977, Ser. No. 859,619

Int. Cl.^{3} F24J *3/02*

U.S. Cl. 126—434 **16 Claims**

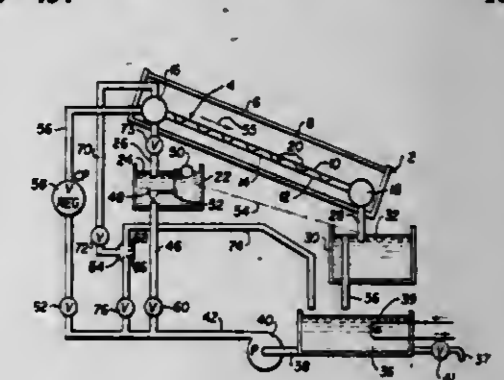

1. A solar collector system, comprising,

a pair of substantially parallel sheets which have interior and exterior surfaces, said interior surfaces facing each other and being spaced apart to provide therebetween a flow passage space,

spacer means for limiting the movement of said sheets toward each other, and

means for maintaining a pressure differential between the space and the exterior surface of at least one of said sheets to bias the sheets toward each other to a position where the thickness of the flow passage space is established by said spacer means,

collector inlet means located at the upper end of the sheets for introducing heat-receiving liquid into said flow passage space,

collector outlet means located at the lower end of the sheets for collecting heat-receiving liquid discharged from said flow passage space,

said means for maintaining a pressure differential including fluid supply means and fluid discharge means, said fluid discharge means being connected to the collector outlet means and containing liquid which is at atmospheric pressure at a given elevation below the collector outlet means, said fluid supply means supplying fluid at subatmospheric pressure to said collector inlet means.

4,299,201
SOLAR ENERGY FOCUSING MEANS
Junjiro Tsubota, 2392, Jindaiji-machi, Chofu-shi, Tokyo 182, Japan
Filed Jun. 19, 1979, Ser. No. 50,099
Int. Cl.³ F24J *3/02*
U.S. Cl. 126—440 **12 Claims**

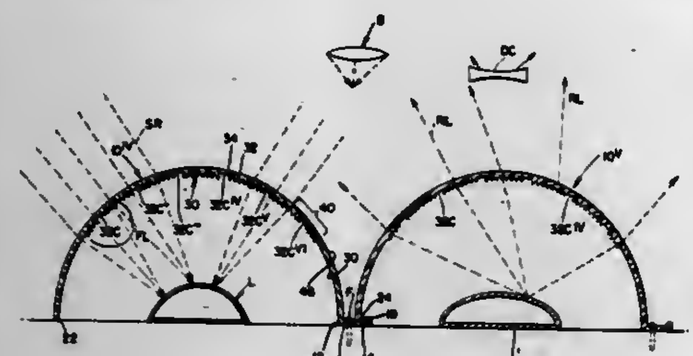

1. A solar energy focusing means comprising:
a hollow solar energy focusing body, having a transverse cross-section which includes a substantial fraction of a plane figure, said focusing body straddling a portion of a solar energy conversion device so that solar energy is incident upon said focusing body prior to being incident upon such conversion device portion;
a multiplicity of fine menisci defined in said solar energy focusing body to be in a plurality of groups with spacing between said groups, said menisci being ground and angled to define a plurality of biconvex lenses for incident solar energy and a plurality of biconcave lenses for solar energy which is reflected from said solar energy conversion device, said plurality of bi-convex lenses having a plurality of focuses on said focusing body to focus incident solar rays in multiple beams onto such conversion device portion in the manner of convex lenses, said multiple focuses applying multiple focused beams onto the solar energy conversion device at all times irrespective of the position of the sun so that the sun need not be tracked, said concave lenses dispersing said reflected solar energy so that said focusing body has an outward overall coloring corresponding to the coloring of such conversion device portion straddled by said focusing body.

4,299,202
INTEGRATED SOLAR ROOF SYSTEM AND METHOD OF PRODUCING SAME
Alfred M. Mayo, and Charles C. Convers, both of Dallas, Tex., assignors to Pure Power Incorporated, Dallas, Tex.
Filed Sep. 5, 1978, Ser. No. 939,664
Int. Cl.³ F24J *3/02*
U.S. Cl. 126—441 **63 Claims**

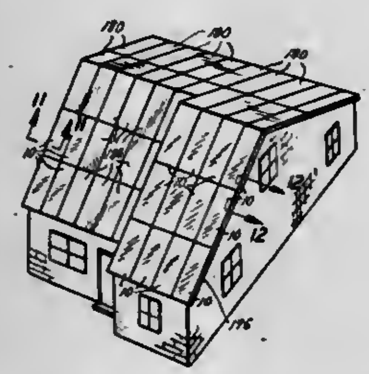

1. A solar collector panel including a base assembly, an absorber assembly mounted within the base assembly, and a light transmitting cover above the absorber assembly, the base assembly further comprising inner and outer reflective surfaces, an insulating layer between said surfaces, a peripheral frame structure having portions embedded in the insulating layer, and supports having portions also embedded in the insulating layer and cooperating with the frame to provide mounting supports for mounting the panel on the structure with which it is to be used.

4,299,203
TUBULAR SOLAR COLLECTOR SYSTEM
Alvin Skopp, Clark, N.J., assignor to Exxon Research & Engineering Co., Florham Park, N.J.
Filed Nov. 13, 1979, Ser. No. 93,753
Int. Cl.³ F24J *3/02*
U.S. Cl. 126—443 **6 Claims**

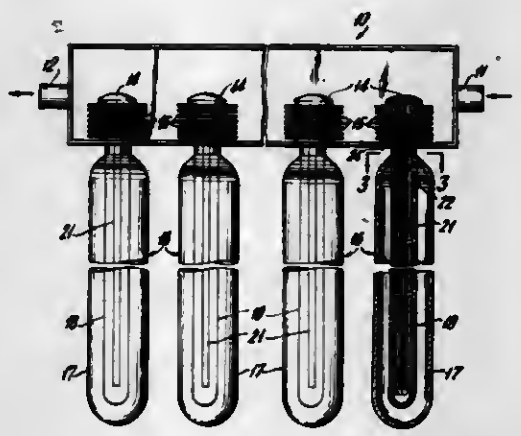

1. A solar collector comprising: a manifold having an inlet and an outlet for the introduction of and removal from said manifold of a fluid, said manifold having a plurality of heat exchange members therein adapted to be in heat exchange relationship with a fluid introduced into said manifold; a plurality of tubular solar collector members extending downwardly from and operably and detachably connected to said manifold heat exchange members such that a first fluid contained within said tubular solar collector member is circulated by thermosyphoning action in heat exchange relationship with said heat exchange member of the manifold to which said tubular member is connected when said tubular collector members are exposed to incident solar radiation whereby heat is transferred from said first fluid to said heat exchange members and to a second fluid introduced into said manifold and wherein said heat exchange members define a wall portion of said manifold thereby preventing the ingress of ambient atmosphere into said manifold when a tubular collector is detached.

4,299,204
SOLAR COLLECTOR
John L. Cotsworth, 11 Lake Rd., Short Hills, N.J. 07078
Filed May 21, 1980, Ser. No. 152,337
Int. Cl.³ F24J *3/02;* **F28F** *1/32*
U.S. Cl. 126—447 **3 Claims**

1. A solar collector with a tube grid for the passage therethrough of a heat exchange fluid, in compressive engagement with an absorber plate, comprising:
(a) a hollow collector housing having an intake and an outlet port for said heat exchange fluid, and comprising a broad floor surface and at least one upstanding wall defining a cavity;
(b) a pad of semi-rigid, compressible material disposed in said cavity adjacent said floor surface;
(c) a plate of heat absorbent material disposed upon said pad;
(d) a tube grid for said heat exchange fluid disposed upon said plate, said tube grid defining an inlet end and an outlet end, said inlet end and said outlet end in corresponding fluid communication with said intake port and said outlet port;
(e) a plurality of strips disposed upon said tube grid, said strips having a first adjacent surface resting on said grid, and a second opposed surface removed therefrom;

(f) a ray-pervious sheet disposed above said tube grid and resting upon the opposed surfaces of said strips;
(g) a frame disposed upon said sheet and fastened to said wall to exert compressive force on said sheet to urge said sheet,

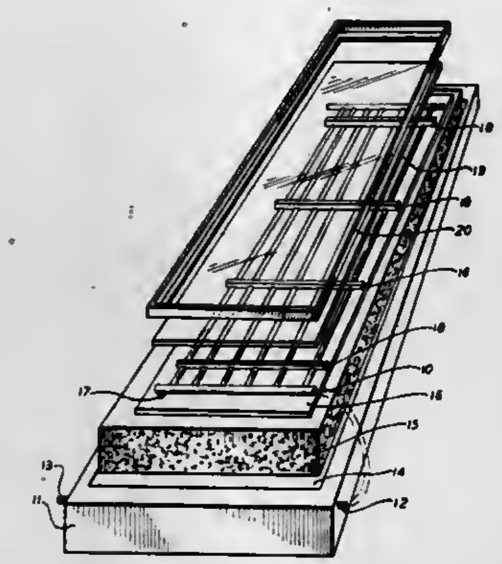

said strips, said tube grid and said plate into compressive, intimate engagement with each other and with said pad to provide uniform thermal registry between said tube grid and said plate.

4,299,205
HEAT ENERGY COLLECTOR
James R. Garfield, 2700 Balmoral Ct., Ft. Collins, Colo. 80525
Filed Nov. 19, 1979, Ser. No. 95,207
Int. Cl.³ F24J *3/02;* **F28F** *13/18*
U.S. Cl. 126—449 **21 Claims**

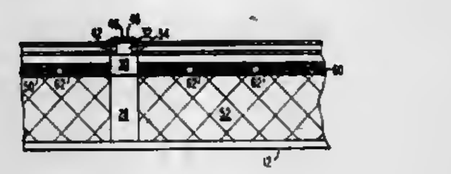

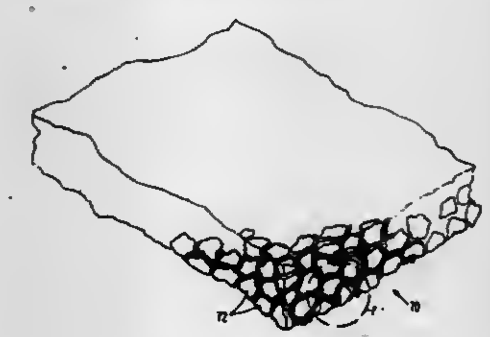

1. A heat energy collector comprising:
a body having a predetermined minimum thickness and composed of a packed plurality of particles of a material the primary ingredient of which is carbon, each of said particles having a maximum external dimension of between approximately one-fourth and one-half said predetermined thickness;
and an elastomeric binder, substantially permeated throughout said particles and forming a continuous coating over the exterior surface of said body, cohesively rigidifying said particles together sufficiently to render said body fluid impervious and at least substantially self-supporting.

4,299,206
FOOT EXERCISER
Steven R. Hofstein, North Brunswick, N.J., assignor to World Medical Marketing Corporation, New York, N.Y.
Division of Ser. No. 85,330, Oct. 29, 1979. This application Jan. 14, 1980, Ser. No. 111,693
The portion of the term of this patent subsequent to Jul. 28, 1998, has been disclaimed.
Int. Cl.³ A61H *1/02*
U.S. Cl. 128—25 B **6 Claims**

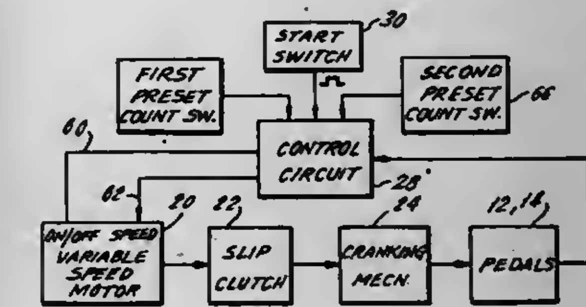

1. A foot exercising device, comprising:
a pair of foot pedals;
motor means for reciprocating said foot pedals; and
control circuit means for controlling the operation of said motor means, said control circuit means counting the number of reciprocations of said pedals and varying the speed of said motor means as a function of said count.

4,299,207
MASSAGE ARRANGEMENT
Erich Pfanstiel, Haus Nr. 3, D-7853 Steinen, Kirchhausen, Fed. Rep. of Germany
Filed Feb. 11, 1980, Ser. No. 120,854
Claims priority, application Fed. Rep. of Germany, Feb. 13, 1979, 2905383
Int. Cl.³ A61H *7/00*
U.S. Cl. 128—56 **19 Claims**

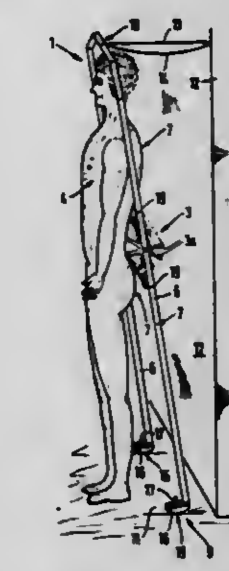

1. A massage arrangement, comprising a frame positioned on a stationary base; massage rollers mounted on said frame for advancing movement along the length of said frame to apply a massaging action to a substantially vertically positioned body to be massaged; said frame being slanted with respect to a vertical wall and being hingedly mounted in said stationary base; and means suspended from an upper end of said frame and yieldably supporting said frame so that the frame and rollers may yield in direction away from the body upon contact of the rollers with any projecting part of the body.

4,299,208
GUM MASSAGE DEVICE
Max A. Blanc, 46 Cite du Lac, St. Jean de Luz, France 64500, assignor to Max A. Blanc, St. Jean de Luz, France and William B. Anderson, West Palm Beach, Fla., a part interest
Filed Feb. 11, 1980, Ser. No. 120,495
Int. Cl.[3] A61H *7/00*
U.S. Cl. 128—62 A **9 Claims**

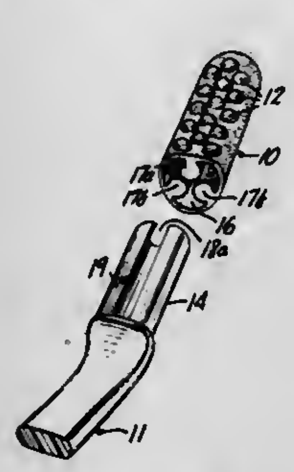

1. A gum massage device comprising an elongated resilient member, means defining a longitudinally extending passage in said resilient member open on at least one end, a plurality of gum massaging formations on an exterior surface of said resilient formation and a plurality of interlocking formations of generally cylindrical formation and extending longitudinally within and substantially the length of said passage and spaced apart from each other to provide channels for receiving interlocking support formations.

4,299,209
VERTEBRAL IMMOBILIZATION AND EXTRICATION SUPPORT
James D. Behrens, 3355 S. Flower, No. 146, Lakewood, Colo. 80227, and James W. Buckley, 4940 Estes Ct., Arvada, Colo. 80002
Filed Apr. 27, 1979, Ser. No. 34,178
Int. Cl.[3] A61F *5/04*
U.S. Cl. 128—87 B **7 Claims**

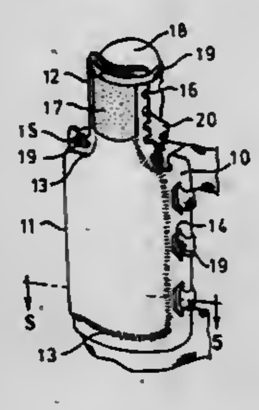

1. In an emergency vertebral immobilization, extrication, and transportation support, in combination with patient fastening means and related emergency medical devices, the improvement which comprises:
an elongated sheet member which is laterally arcuately formed of radiotranslucent material wherein said sheet is contoured into body conforming portions generally following the lateral curvature of the back and generally outlining the head, shoulders, and main body of the patient;
means for emplacing said sheet member tangentially along said lateral curvature into closely confining position with minimal movement of the patient wherein said sheet member has a thin and low friction cross section transverse to the tangential direction of emplacement and said arcuate sheet member generally conforms to the curvature of the interfacing surface between the patient's body and the closely confining material, such as that of an automobile seat;
means defining a plurality of slots distributed along opposing lateral margins of said main body portion of said sheet member with hand and fastener access means, requiring minimal movement of the patient, comprising an arcuate displacement of the sheet surface from the axial tangential plane and with said slots dimensioned to receive both fastening means and attendants' hands;
means defining a pair of slots each disposed along and parallel to the respective opposite margin of said shoulder contoured portion of said sheet member with hand and fastener access means, requiring minimal movement of the patient, comprising an arcuate displacement of the sheet surface from the axial tangential plane and with said pair of slots dimensioned to receive fastening means;
means defining a plurality of notches distributed along opposite edges of said head contoured portion of said sheet member with hand and fastener access means, requiring minimal movement of the patient, comprising an arcuate displacement of the sheet surface from the axial tangential plane and with said notches dimensioned to receive fastening means;
means defining hand and fastener access wherein a rectangular strip of Velcro fastener fixed on the convex side of said head-contoured portion of said sheet member is readily mated, with minimal movement of the patient, to head securing Velcro tipped straps guided through said notches, said access facilitated by means of the arcuate displacement of the sheet surface from the axial tangential plane;
means enabling the prevention of emesis aspiration of the patient when in a horizontal position wherein said sheet member is of sufficient curvature and strength to be rolled laterally to facilitate gravitational clearance of the patient's breathing passages;
means defining laminate enclosure of said radiotranslucent material about a buoyant and reinforcing beveled core layer flotation means.

4,299,210
UNIVERSAL SPLINT
James L. Santy, Box 783, 1362 Woodside Ave., Park City, Utah 84060
Filed Jul. 1, 1980, Ser. No. 164,910
Int. Cl.[3] A61B *17/18;* **A61F** *5/04*
U.S. Cl. 128—87 R **15 Claims**

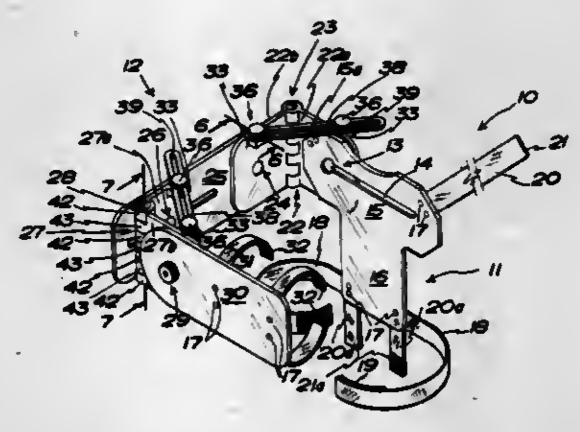

1. An improved universal splint comprising:
a back board that includes a transverse elongate opening therein;
means for releasably securing said back board to a human torso;
an upper hinge unit consisting of first and second plates that are connected together along edges thereof by a single hinge;
a back board pivot arranged in said transverse elongate opening and connected to said first plate of said upper hinge unit;
an upper extremity board that is connected by a pivot to said second plate of said upper hinge unit, which upper extremity board includes a center longitudinal opening formed therein;
a lower hinge unit that, like said upper hinge unit, includes first and second plates, and includes with said first plat thereof a pivot that is arranged in said center longitudinal opening in said upper extremity board;
a lower extremity board that is connected by a pivot to the second plate of said lower hinge unit;
means for releasably locking said first and second plates of said upper and lower hinge units relative to one another;
lock means arranged with each said pivot for releasably maintaining the pivotally connected members relative to one another; and
means for releasably securing said splint to a person's extremity.

4,299,211
EXTRACTION SPLINT
David Doynow, 31 Sherbrooke Rd., Hartsdale, N.Y. 10530
Filed Apr. 24, 1980, Ser. No. 143,424
Int. Cl.[3] A61F *5/04*
U.S. Cl. 128—89 R **4 Claims**

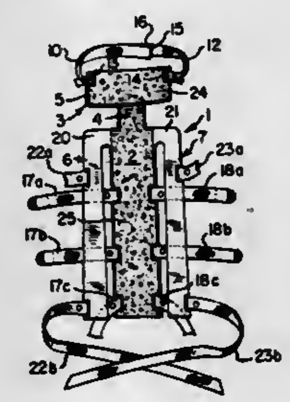

1. An improved extraction splint capable of immobilizing the head, shoulders and vertebral column of an injured person, which splint comprises
(a) a frame formed from pliable material, said frame comprising
1. a central portion having a length which approximates the length of a human torso;
2. a neck and head brace portion which extends longitudinally from one end of said central portion;
3. and at least one over-the-shoulder brace portion which is an elongated strip disposed lengthwise of said central portion and which is attached at one end to the central portion adjacent that end of the central portion from which the neck and head brace portion extends;
4. wherein the several portions of said frame may be manually deformed to accommodate the splint to the contortions in which an injured person may be found;
(b) and a plurality of straps, individual ones of said straps being engaged respectively with said central, neck and head brace portion and said shoulder brace portions, each of said straps having a reach sufficient to clasp the engaged portion of the frame to a part of the body of an injured person.

4,299,212
EXTERNAL FRACTURE IMMOBILIZATION SPLINT
Hendrik Goudfrooy, Amsterdam, Netherlands, assignor to Nederlandsch Central Organisatie voor Toegepast-Natuurwetenschappelijk Onderzoek, The Hague, Netherlands
Filed Sep. 7, 1978, Ser. No. 940,276
Claims priority, application Netherlands, Sep. 8, 1977, 7709897
Int. Cl.[3] A61F *5/04*
U.S. Cl. 128—92 A **11 Claims**

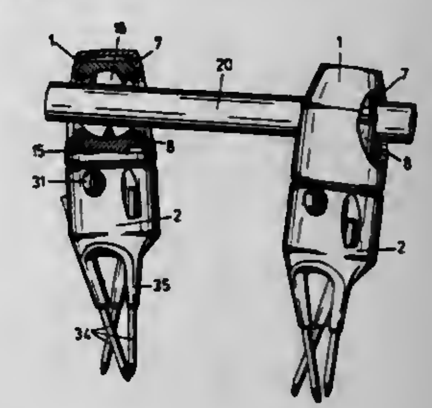

1. An external fracture immobilization splint for use in association with two sets of bone pins respectively located on opposite sides of a fracture, said immobilization splint comprising a connecting rod and two clamping heads, each of which clamping heads slidably holds at a mutual angle two or more of said bone pins in guide openings so that the axes of the bone pins do not intersect each other, wherein each clamping head has a hollow rigid casing, a transverse opening near one end of said casing for the passage of said connecting rod to connect to the other clamping head, said transverse opening being in communication with an internal cavity in the casing, said guide openings for said bone pins opening in said cavity to cause said pins to protrude partly into said cavity, clamping means within said casing in said internal cavity comprising two clamp parts slidable therein and a clamp actuating member engaging said clamp parts, said clamp actuating member being operable when actuated to move said clamp parts in said cavity to have one clamp part clamp said rod in any desired relative position with respect to the clamping head and the other clamp part to clamp said bone pins to the casing and to engage said other clamp part with the parts of the bone pins protruding into said cavity and thereby immobilize the bone pins relative to the head and the head relative to the connecting rod simultaneously, deactuating said clamp actuating member loosening these parts simultaneously so that said splint may be adjusted or removed.

4,299,213
LEG STABILIZER CONSTRUCTION
James T. Violet, 5238 Dungannon Cir. N.W., North Canton, Ohio 44720
Filed Feb. 4, 1980, Ser. No. 118,511
Int. Cl.[3] A61F *13/00*
U.S. Cl. 128—133 **11 Claims**

1. A device for immobilizing a portion of a patient's limb on a supporting platform, said device including:
(a) an elongated, inflatable, flexible member having a hollow interior forming an air chamber, said member being adapted to be wrapped about the limb of a patient for securely grasping the limb therein when the member is inflated;
(b) valve means communicating with the air chamber for introducing air into said chamber for inflating the flexible member;
(c) fastening means engageable with the flexible member for securing said member in a wrapped position about the limb of a patient prior to inflating said member;

(d) a base adapted to be mounted on the supporting platform closely adjacent the limb to be immobilized; and

(e) a pair of rigid retention plates mounted in a spaced relationship on the base, each of said plates having a concavely curved inner surface abuttingly engaged with the flexible member to securely hold said member therebetween when the member is inflated, said curved surfaces being diametrically opposed with respect to each other and each forming generally a quadrant of an imaginary circle extending about the inflatable member.

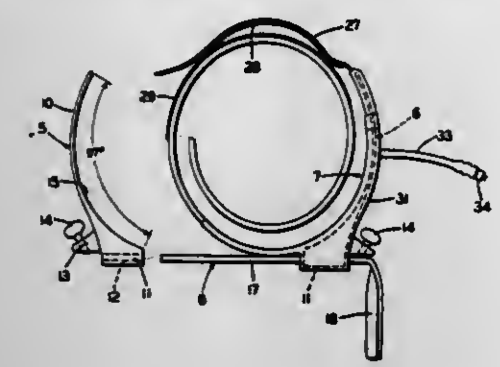

4,299,214
CUFF FOR THE RELIEF OF TENNIS ELBOW AND THE LIKE

Robert R. Sweltzer, 135 N. Syndicate Ave., Thunder Bay, Ontario, Canada P7C 3V3

Filed Jan. 14, 1980, Ser. No. 111,692

Int. Cl.³ A61F *13/00*

U.S. Cl. 128—165 8 Claims

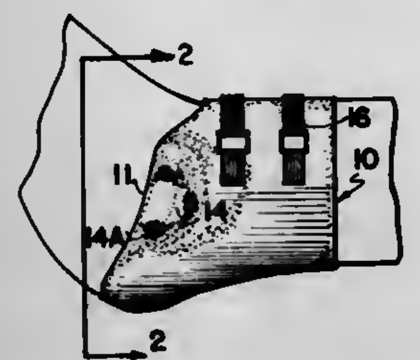

1. A cuff for the relief of tennis elbow and the like comprising a resilient, semi-rigid, split sleeve having a pair of longitudinally extending side edges defining an opening longitudinally of said sleeve, adjustable fastening means to detachably hold said sleeve in the closed position around the forearm of the patient, and an inwardly extending pressure pad formed in the wall of said cuff and situated to apply pressure over the proximal area of the forearm extensor muscle group and/or the proximal forearm flexor group of the patient, said pressure pad being substantially U-shaped when viewed in plan with the inner surface blending smoothly into the inner surface of the sleeve, said U-shape surrounding a conical area of the wall which is not depressed thereby preventing impingement upon the humeral epicondyle of the patient.

4,299,215
ANTI-CONTAMINATION DEVICE FOR USE IN OPERATING THEATRES

Ramon L. Anon, Calle de la Solana, num. 11, Torrejon de Ardoz (Madrid), Spain

Filed Oct. 31, 1979, Ser. No. 89,910

Claims priority, application Spain, Jan. 19, 1979, 240.864[U]

Int. Cl.³ A61M *16/00*

U.S. Cl. 128—200.24 9 Claims

1. An apparatus for filtering respiratory gases, which comprises a chamber having a boundary wall defined by an elastic bag and inlet means disposed to conduct respiratory gases into said elastic bag to be filtered; conduit means disposed for communication with a vacuum source outside said chamber and adapted to extend into said chamber to accomodate the outflow of filtered respiratory gases therefrom under the action of such vacuum source, said conduit means having an inlet within the chamber; and a filter disposed within the chamber and interposed across the inlet of said conduit means to filter respiratory gases in the chamber as such gases pass through the filter into the conduit means for outflow therethrough.

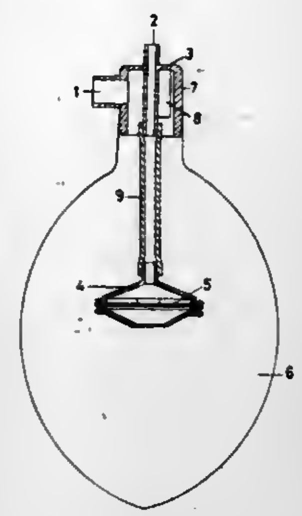

4,299,216
SELF-CONTAINED CLOSED CIRCUIT BREATHING APPARATUS HAVING A BALANCED BREATHING RESISTANCE SYSTEM

Thomas E. Bernard, and Richard L. Stein, both of Pittsburgh, Pa., assignors to The United States of America as represented by the Secretary of the Interior, Washington, D.C.

Filed Oct. 17, 1979, Ser. No. 85,569

Int. Cl.³ A62B *7/10*

U.S. Cl. 128—205.12 6 Claims

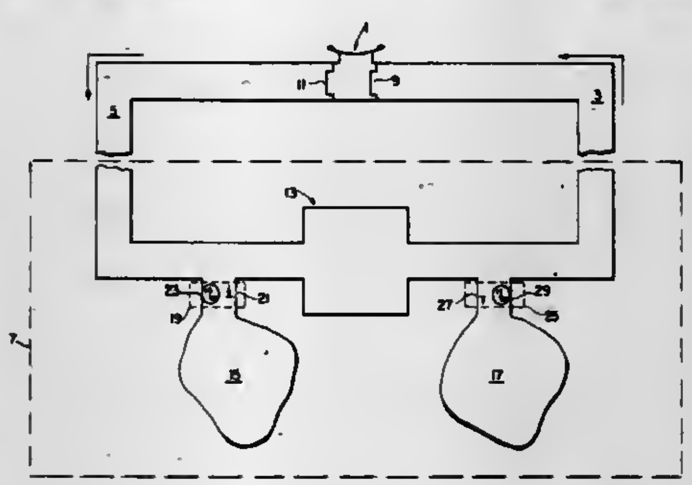

1. A self-contained closed circuit having an inhalation conduit and an exhalation conduit comprising in combination:
a mouthpiece in fluid communication with said conduits;
an inhalation check valve and an exhalation check valve on either side of said mouthpiece providing unidirectional flow through said inhalation and exhalation conduits, respectively;
a chemical canister connected across said inhalation and exhalation conduits;
a post-canister storage container communicating with said inhalation circuit;
a pre-canister storage container communicating with said exhalation conduit, said pre-canister storage container being provided with a unidirectional impedance component comprised of a resistance means for allowing one part of the exhaled air during exhalation to pass into the pre-canister storage container and the remainder to pass through said chemical canister into said post-canister storage container and a unidirectional check valve permitting essentially free flow of air out of said pre-canister storage container during inhalation; and said post-canister storage container being provided with a unidirectional impedance component comprised of a unidirectional check valve permitting essentially free flow of air into said post-canister storage container during exhalation and with a resistance means permitting restricted flow of air from said post-canister storage container during inhalation.

4,299,217
INTRAVASCULAR CATHETER

Kyuta Sagae, Tokyo; Susumo Tanabe, Sagamihara, and Hiroshi Kamogawa, Fujinomiya, all of Japan, assignors to Terumo Corporation, Tokyo, Japan

Continuation-in-part of Ser. No. 909,721, May 26, 1978, Pat. No. 4,217,895. This application Dec. 17, 1979, Ser. No. 104,655

Int. Cl.³ A61M *5/00, 25/00*

U.S. Cl. 128—214.4 8 Claims

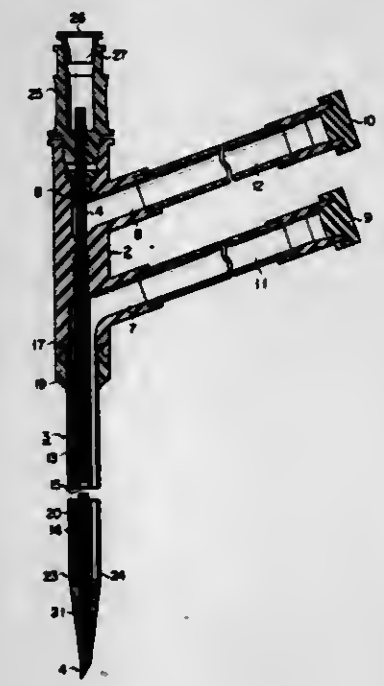

1. An intravascular catheter, comprising:
a hub having an axial passage which is open at the forward end and sealed with a sealing member at the base end opposite to said forward end, a first auxiliary passageway branched from the axial passageway near the forward end of the hub, and a second auxiliary passageway communicating with the axial passageway at the sealed end of the axial passage;
a flexible double-walled tube having a solid and smoothly tapered tip portion and consisting of an inner tube extending into the axial passageway formed in the hub and providing a central passageway and an outer tube disposed in coaxial relation to the inner tube and with its outer surface merging smoothly with the tapered surface of said tip portion, thereby forming an annular passageway between the outer wall of the inner tube and the inner wall of the outer tube, the base edge of the inner tube being secured at an intermediate portion between the positions from which the first and second auxiliary passageways extend outward so as to enable the central passageway formed in the inner tube to communicate with the second auxiliary passageway, the base edge of the outer tube being fixed to the forward end of the hub so as to enable the annular passageway to communicate with the first auxiliary passageway, and the central passageway having an opening at the tip of said tip portion and the forward end of the annular passageway having at least one bore provided at the forward end portion of the outer tube at the juncture of the outer tube and said tip portion; and
a needle removably inserted into the central passageway formed in the inner tube through the sealing member provided at the base portion of the hub such that the tip of the needle extends beyond the tapered tip of the double-walled tube and defines a smooth continuation of the tapered outer surface of said tip portion, the location of said bore in the outer tube being confined to a portion which excludes a top curve portion of the outer tube in the cross section perpendicular to the axis of the catheter, which when the axis of the catheter is disposed horizontally and a tapered tip surface of the needle is faced vertically upward falls within ±30° around the center of the needle as measured from the top point of the top curve portion.

4,299,218
PRE-PROGRAMMABLE METERING APPARATUS FOR A FLUID INFUSION SYSTEM

Vincent L. Knigge, Mundelein, and Norm Shim, Glenview, both of Ill., assignors to Baxter Travenol Laboratories, Inc., Deerfield, Ill.

Continuation of Ser. No. 856,927, Dec. 2, 1977, abandoned. This application Feb. 19, 1980, Ser. No. 122,734

Int. Cl.³ A61M *5/00*

U.S. Cl. 128—214 F 5 Claims

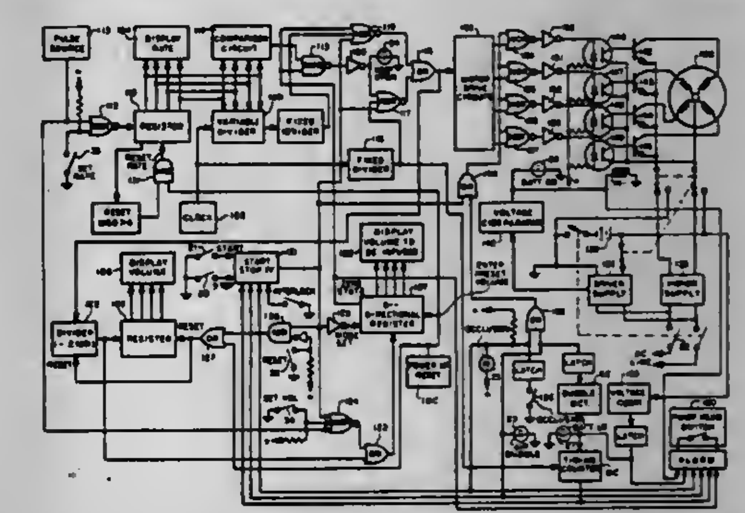

1. Metering apparatus for establishing a desired fluid flow rate through a administration set, comprising:
a housing;
a rotor mounted on said housing for rotation about a fixed axis, said rotor including a plurality of pressure rollers disposed about the circumference thereof;
means including a pressure plate for positioning a tubing segment of the administration set in compressive engagement with at least a portion of said rollers whereby fluid is pumped through said tubing segment with rotation of said rotor;
means including a stepper motor for driving said rotor;
a source of repetitive clock pulses of predetermined constant frequency;
a pulse divider providing an output pulse upon each occurrence of a predetermined number of said clock pulses, said pulse divider providing a division factor dependent on an applied digital control signal;
motor drive means responsive to each said output pulse of said pulse divider for advancing said stepper motor one increment upon each occurrence of said predetermined number of clock pulses;
rate control means including a register for generating a digital control signal for controlling the division factor of said pulse divider;
user-actuable means including at least one push-button type switch for applying pulses to said rate control register to establish a predetermined counting state therein whereby the division factor of said pulse divider is set to provide output pulses which step said stepper motor at a rate

providing a predetermined desired flow rate in said tubing segment.

4,299,219

INTRAVENOUS NEEDLE INSERTION DEVICE

George P. Norris, Jr., 10881 Snapper Creek Dr., North, South Miami, Fla. 33173

Filed Dec. 17, 1979, Ser. No. 104,042

Int. Cl.³ A61M *5/32*

U.S. Cl. 128—215 8 Claims

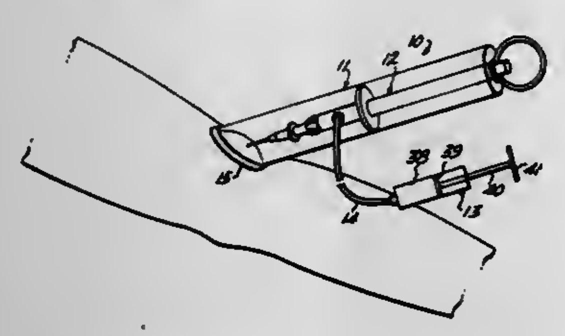

1. An intravenous needle insertion device comprising, in combination, a peripheral wall defining an elongated vacuum chamber open at one end, an elongated intravenous needle holding and manipulating assembly co-axially disposed within said vacuum chamber, means supporting said intravenous needle holding and manipulating assembly for relative axial movement within said vacuum chamber, said needle holding and manipulating assembly comprising releasable means for holding a headed intravenous needle in coaxial alignment therewith so that the needle tip extends in the direction of said vacuum chamber opening, means hermetically sealing the needle holding end portion of said needle holding and manipulating assembly with respect to a portion of the vacuum cylinder, adjacent the open end thereof and means for creating a vacuum in said open end portion of said vacuum cylinder whereat said open end is sealed off by reason of said opening being pressed into contact with the skin of the patient surrounding the vein to be punctured, said needle holding and manipulating assembly further comprising mechanism controlling said releasable means for releasing a held intravenous needle from the outside of said vacuum cylinder while said vacuum cylinder is being pressed into contact with the skin of the patient.

4,299,220

IMPLANTABLE DRUG INFUSION REGULATOR

Frank D. Dorman, Minneapolis, Minn., assignor to The Regents of the University of Minnesota, Minneapolis, Minn.

Filed May 3, 1979, Ser. No. 35,535

Int. Cl.³ A61M *7/00*

U.S. Cl. 128—260 17 Claims

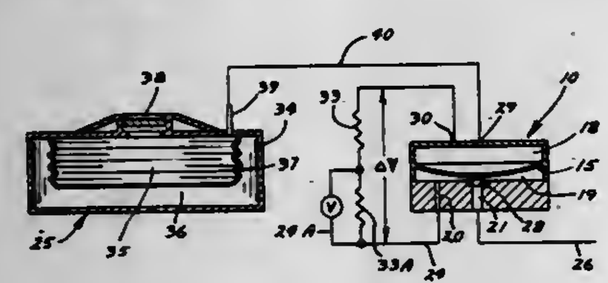

1. In a drug delivery system for implantation in an animal body for the infusion of liquid drugs into said body including a pressure actuated drug delivery device which is sensitive to ambient pressure and temperature conditions and a liquid catheter flow line for transfer of drug from the delivery device to an infusion site within the body, the improvement which consists in a pressure sensitive flow regulator in said flow line, said regulator comprising:

(A) a body,

(B) a shallow cavity within said body,

(C) a flexible diaphragm in said body dividing said cavity into two chambers,

(D) an inlet to the first of said chambers connected to the flow line,

(E) an inlet to the second of said chambers connected to the flow line to receive the drug from the drug delivery device,

(F) an outlet from the second of said chambers to the flow line downstream from the regulator, said outlet being centrally disposed in the wall of the cavity underlying said diaphragm, whereby flexing of the diaphragm in one direction in response to increased pressure in the flow line closes said outlet, and

(G) at least one capillary flow restrictor in the flow line upstream from the inlet to the second chamber and in series with the inlet and outlet of said second chamber.

4,299,221

IRRIGATION AND SUCTION HANDPIECE

Earl G. Phillips, Kalamazoo Township, Kalamazoo County, and Robert W. Insalaco, Portage, both of Mich., assignors to Stryker Corporation, Kalamazoo, Mich.

Filed Sep. 28, 1979, Ser. No. 79,870

Int. Cl.³ A61M *1/00;* A61C *1/02*

U.S. Cl. 128—276 5 Claims

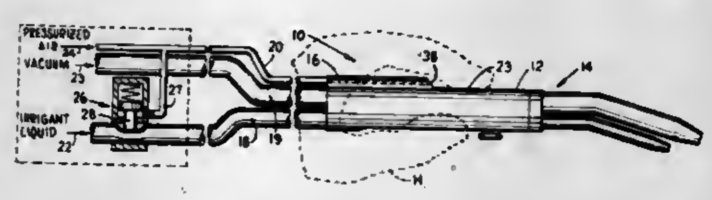

1. In an irrigation-suction tool incorporating an air pressure conduit connectible to an air pressure source, a suction conduit connectible to a suction source and an irrigant liquid conduit connectible to an irrigant liquid source, a valve interposed in said irrigant liquid conduit and normally biased to block irrigant liquid flow through said irrigant liquid conduit, said valve having a control portion connected to said air pressure conduit and responsive to change in air pressure past a threshold in said air pressure conduit for causing said valve to open said irrigant liquid conduit to flow therethrough and responsive to a reverse change in air pressure past said threshold for permitting said valve to return to its flow-blocking condition thereby shutting off irrigant liquid flow through said irrigant liquid conduit, a tip unit having a forward end placeable adjacent the operating site, said tip unit comprising hollow elongate suction and irrigant liquid tips for respectively removing liquid materials from the operating site and supplying irrigant liquid thereto;

the improvement comprising:

a handle in the form of an elongate rigid body of plastics material containing three elongate parallel passageways formed integrally in said body in vertically stacked relationship isolated from each other, said passageways including an irrigant liquid passageway and a suction passageway extending longitudinally between and opening through the front and rear ends of said body, said irrigant liquid and suction passageways extending longitudinally of said body with said irrigant liquid passage extending along the bottom wall of said body and said suction passage extending along the upper wall of said body, a bead extending longitudinally along the top of said body from the rear end of said body to near the longitudinal central portion of said body, an air pressure passage extending longitudinally through said bead above said suction passage, said bead being of substantially smaller cross sectional area than the remainder of said body, said air pressure passage opening forwardly through the forward end of said bead above said suction passage and forming an air pressure control port, an opening through the top wall of said body into said suction passage and forming a suction control port, said suction control port being spaced forward of and adjacent said air pressure control port at a distance permitting both alternate and simultaneous closure of said ports by the thumb or finger of the operator's hand carrying the body, said body having means at the rear end thereof for connecting said rear ends of said passages to corresponding ones of said air pressure, suction and irrigant liquid conduits for simultaneous control of flow of irrigant liquid and suction by a single finger of the hand carrying the body without need for valves in or near the body or cross connections of said passages in or near said body, said body having means for connecting said tips to the forward end thereof, said tip unit being free of connection to said air pressure conduit, the portion of said tool forward of said air pressure control port being free of any portions of said air pressure passageway, said means for connecting said body to said tips and conduits being of releasable type to facilitate cleaning of said body by disconnection from said conduits and tips.

4,299,222

SELF-CONTAINED SUCTION PUMP

James B. Eckenhoff, Los Altos, Calif., assignor to ALZA Corporation, Palo Alto, Calif.

Filed Jan. 8, 1980, Ser. No. 110,376

Int. Cl.³ A61M *1/00*

U.S. Cl. 128—278 3 Claims

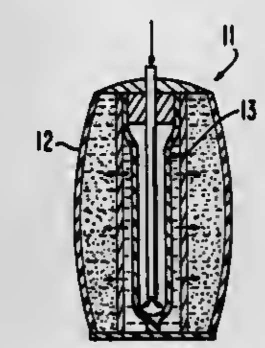

1. A self-contained suction pump for drawing a fluid comprising:

(a) an outer impermeable expansible housing;

(b) an inner elastomeric fluid collection container in at least a partially collapsed state sealingly housed within the housing;

(c) a port extending from the container through the housing;

(d) a rigid semipermeable partition between the housing interior and the container exterior, said partition substantially surrounding said container and being spaced therefrom;

(e) a water imbibing composition interposed between the housing and partition; and

(f) means for infecting an aqueous fluid in the space between the at least partially collapsed container and the partition.

4,299,223

TAPE TAB FASTENER FOR DISPOSABLE DIAPER

William E. Cronkrite, Westmont, Ill., assignor to 3 Sigma Inc., Covington, Ohio

Filed May 21, 1980, Ser. No. 151,787

Int. Cl.³ A61F *13/16;* A41B *13/02;* A44B *18/00;* A41F *1/00*

U.S. Cl. 128—287 15 Claims

10. A disposal diaper having a facing sheet defining a diaper inside surface adapted to be directed toward an infant and a moisture-impervious backing sheet having an outside surface with a peripheral edge, and a pair of tabs secured to said edge, each of said tabs including a backing web having opposite edges and opposite ends with first adhesive means permanently attached to said inside and outside surface along said marginal edge and an outside face with release means on said outside face along said inside surface, a tape segment overlying said outside face and said release means with said tape segment having opposite edges and opposite ends and second adhesive means securing said tape segment to said release means and exposed portion of said outside face, the improvement of said first adhesive means including a plurality of spaced lines of

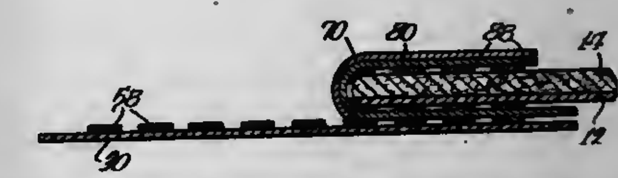

adhesive extending generally parallel to said opposite ends of said backing web and adhered to said outside surface to provide flexibility to said backing web to conform to irregularities on said outside surface, each of said lines of adhesive having a width which is many times less than the width of said web to increase the flexibility of said tab.

4,299,224

DISPOSABLE CLIP APPLIER

Douglas G. Noiles, New Canaan, Conn., assignor to United States Surgical Corporation, Norwalk, Conn.

Filed Jun. 6, 1979, Ser. No. 46,185

Int. Cl.³ A61B *17/12, 17/04;* B31B *1/00*

U.S. Cl. 128—325 26 Claims

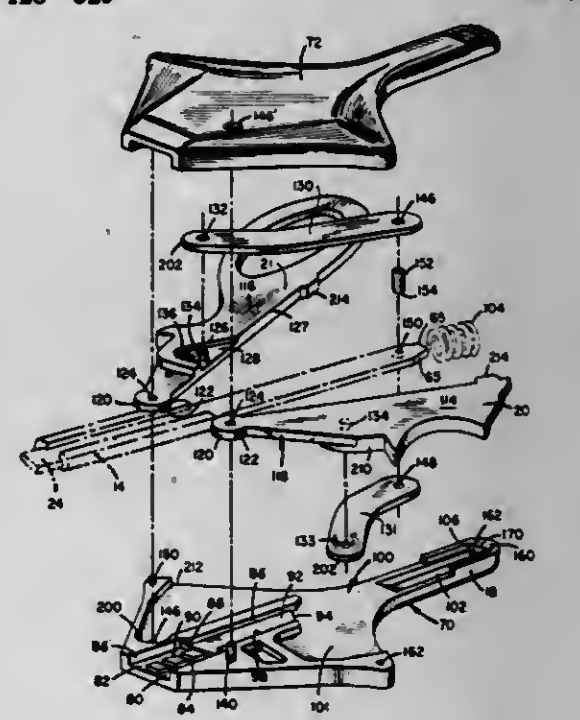

1. A device for applying a surgical clip, said device comprising:

a housing;

a pair of opposed jaws resiliently spaced apart and extending out of said housing;

handle means, including an elongated shank terminating at one end in a manual force-receiving portion and at the other end in a mounting portion;

mounting means in said housing, receiving said mounting portion of said shank, for mounting said shank for arcuate movement, the movement of said shank being confined to a first plane;

a force-imparting surface defined by a first peripheral-edge portion on said shank of said handle means, said force-imparting surface being substantially perpendicular to said first plane and defining a socket;

actuating means including a link movably mounted in said housing, said link being positioned in said socket and having a second peripheral-edge portion in contact with said force-imparting surface in the manner of a hinge for translating movement of said handle means into movement of said actuating means;

link retaining means for holding said link within said socket; and

means responsive to the movement of said actuating means for closing said jaws together and thereby deformably applying said surgical clip.

4,299,225

SURGICAL EXTRACTER

Jacob A. Glassman, Miami Beach, Fla., assignor to The Southeastern Research Foundation, Miami Beach, Fla.

Filed Apr. 26, 1979, Ser. No. 33,478

Int. Cl.^{3} A61B *17/00*

U.S. Cl. 128—328 **5 Claims**

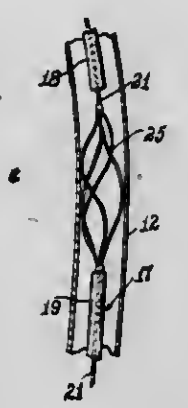

1. A common bile duct stone dislodging and extracting instrument comprising in combination:

(a) a flexible probe including first and second flexible retaining wires

(b) a springy strand bundle having said strands of substantially the same length and running in the same general direction and said strands each having right and left ends and a center portion

(c) said bundle having a relaxed expanded position and a compressed collapsed position

(d) said strands at their left ends coming together and secured to said first flexible retaining wire

(e) said strands at their right ends coming together and secured to said second flexible retaining wire

(f) said bundle when in said relaxed expanded position having its strands at their central portion normally spaced substantially from each other to form a stone receiving basket

(g) said bundle when in said compressed collapsed position having its strands at their central portion in substantially abutting relation to each other to prevent escape of a retrieved stone

(h) a first freely slideable and rotatable catheter sleeve telescoped over said first retaining wire and of a diameter sufficient to receive said bundle when in said compressed collapsed position and having its diameter substantially less than said bundle when in said relaxed expanded position

(i) a second freely slideable and rotatable catheter sleeve telescoped over said second retaining wire and of a diameter sufficient to receive said bundle when in said compressed collapsed position and having its diameter substantially less than said bundle when in said relaxed expanded position

(j) said first and second sleeves being independently movable with respect to each other toward and away from each other from a position of abutting contact to a distance at least equal to the length of said bundle

(k) said first retaining wires including remote means for positioning said first catheter sleeve adjacent said left ends of said bundle strands

(l) said second retaining wire including remote means for positioning said second catheter sleeve adjacent said right ends of said bundle strands

(m) whereby said bundle, when in use, may be selectively covered and uncovered at any selected area along the length of said bundle.

4,299,226

CORONARY DILATION METHOD

Vidya S. Banka, 237 Stacey Rd., Penn Valley, Narberth, Pa. 19072

Filed Aug. 8, 1979, Ser. No. 64,974

Int. Cl.^{3} A61M *25/00*

U.S. Cl. 128—344 **5 Claims**

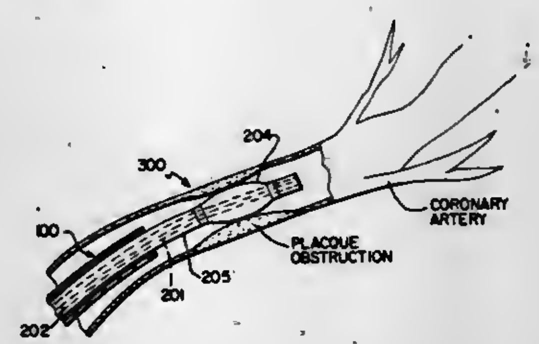

1. The method of dilating coronary arteries comprising the steps of:

(a) providing a single lumen guide catheter;

(b) providing first and second conduits at the base of said single lumen guide catheter, said first conduit being adapted to restrict the flow of liquid out of said catheter and to sealingly receive a dilation catheter therethrough, and said second conduit being adapted to receive a heparinization flushing fluid therethrough;

(c) inserting said guide catheter through the circulatory system of a patient to within at least 20 cm of a coronary blockage to be dilated;

(d) providing a double lumen balloon catheter sized for passage through said first conduit into the single lumen of said guide catheter, said double lumen balloon catheter being at least 10 cm longer than said guide catheter;

(e) inserting a stylet into the inner lumen of said double lumen balloon catheter, said stylet extending within 3 to 5 mm of the tip of said balloon catheter;

(f) inserting said double lumen balloon catheter into said single lumen guide catheter through said first conduit;

(g) flushing the area around said stylet through the inner lumen of said double lumen balloon catheter with haparinization fluid;

(h) manipulating the balloon portion of said double lumen balloon catheter to a point within said obstruction to be dilated; and

(i) injecting dye and saline into said outer lumen of said double lumen catheter to at least temporarily inflate the balloon portion of said catheter, and thereby clear said obstruction.

4,299,227

OPHTHALMOLOGICAL APPLIANCE

Harvey A. Lincoff, The New York Hospital, 525 E. 68th St., New York, N.Y. 10021

Filed Oct. 19, 1979, Ser. No. 86,348

Int. Cl.^{3} A61M *29/02*

U.S. Cl. 128—344 **3 Claims**

1. A method of correcting retinal detachments through a small conjunctival incision comprising the steps of inserting an expandable member into Tenon's space to the depth of the

break; forming a scleral indentation in the eye by expanding said member; leaving said member in place until subretinal

fluid has absorbed and the retina has reattached; and collapsing and removing said member.

4,299,228

SAFETY DEVICE FOR USE WITH A CANNULA

Joseph L. Peters, 282 Ballards Lande, North Finchley, London N.12, England

Filed Jul. 11, 1979, Ser. No. 56,608

Int. Cl.^{3} A61M *25/00*

U.S. Cl. 128—348 **7 Claims**

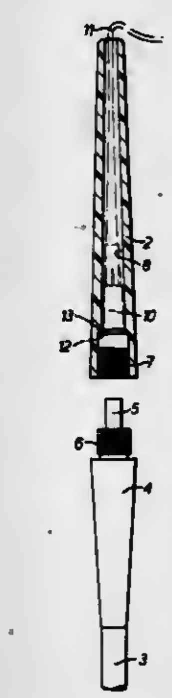

1. A safety device for leading a cannula through a subcutaneous passage, the cannula having a tube and a head member attached to an end of the tube, the safety device comprising a front part and a rear part, said parts having complementary screw threads for threaded engagement and release of the parts, an axial bore in the rear part, a counterbore at the forward end of of said rear part for receiving the cannular head member and holding the head member securely without crushing and with the tube extending rearwardly through the bore, a longitudinal slot extending the full length of said rear part to allow the cannula tube to be inserted radially into said bore and then the head member to be moved axially into the counterbore, said front part being adapted to retain the head member in the counterbore when the front and rear parts are threaded together, and said front part including means for drawing the device and cannula held thereby through a subcutaneous passage and having a smoothly tapering or rounded surface.

4,299,229

METHOD OF OBSERVING THE AIM OR EFFECT OF A LASER BEAM ON A TARGET

Charles E. Enderby, Palo Alto, Calif., assignor to Cavitron Corporation, New York, N.Y.

Filed Dec. 5, 1979, Ser. No. 100,595

Int. Cl.^{3} A61N *3/00*

U.S. Cl. 128—395 **11 Claims**

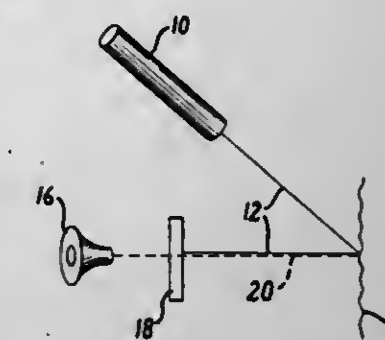

1. A method of observing the aim or effect of a laser beam on a target comprising the steps of:

irradiating with a laser beam a target which fluoresces upon exposure to the laser beam at a wavelength different from that of the laser beam; and

blocking from the observer at least a portion of the laser beam from the target which would harm the observer, but passing the light from the target fluorescence to the observer for viewing the aim or effect of the laser beam on the target.

4,299,230

STABBING APPARATUS FOR DIAGNOSIS OF LIVING BODY

Tetsumaru Kubota, Hachioji, Japan, assignor to Olympus Optical Co., Ltd., Tokyo, Japan

Filed May 9, 1979, Ser. No. 37,352

Int. Cl.^{3} A61B *5/00*

U.S. Cl. 128—630 **3 Claims**

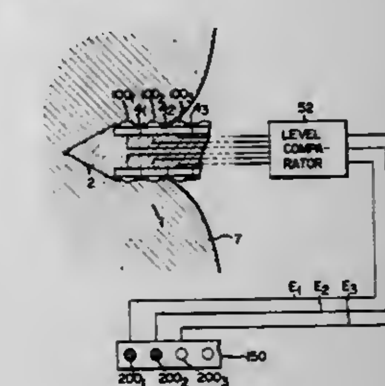

1. A stabbing apparatus for penetration of a living body wall comprising:

a stabbing apparatus body having a sharp edge;

a plurality of pressure sensor elements axially disposed on the peripheral surface of said stabbing apparatus body to sense in succession the pressure to which each said sensor is subjected during penetration of a living body wall; and

means connected to said sensor elements for detecting the pressure above a predetermined level exerted upon each respective sensor element, including separate indicator means responsive to said pressure for each successive axially disposed sensor, whereby the depth of penetration of said stabbing apparatus body with respect to said living body wall is indicated.

4,299,231

ELECTRICALLY CONDUCTIVE, VISCO-ELASTIC GEL AND ITS USE IN ELECTRODE

Werner Karmann; Gerd Weidehaas; Bernd Höwe, and Frank Piel, all of Hamburg, Fed. Rep. of Germany, assignors to Beiersdorf Aktiengesellschaft, Hamburg, Fed. Rep. of Germany

Continuation-in-part of Ser. No. 912,638, Jun. 5, 1978, abandoned. This application Nov. 13, 1979, Ser. No. 93,256

Claims priority, application Fed. Rep. of Germany, Jan. 18, 1977, 2727396

Int. Cl.³ H01B *5/16, 1/20, 17/64;* A61B *5/04*

U.S. Cl. 128—639 **3 Claims**

1. A visco-elastic gel comprising as components 10 to 50% of a high molecular weight gum karaya, 90 to 20% of at least one polyol taken from the class consisting of ethylene glycol, propylene glycol, glycerine, and homologous C_4 alcohols, 0 to 30% of at least one non volatile acid soluble in said polyol, 0 to 30% of at least one non volatile base soluble in said polyol, all percentages being by weight and based on total weight of said gel, said polyol having a water content of 5 to 50% by weight based on said polyol, said components being physiologically acceptable, said gel having a pH of about 4 to 5.

3. An electrode comprising a contact and a visco-elastic gel for electrical connection with the skin, said gel comprising as components 10 to 50% of a high molecular weight gum karaya, 90 to 20% of at least one polyol taken from the class consisting of ethylene glycol, propylene glycol, glycerine, and homologous C_4 alcohols, 0 to 30% of at least one non volatile acid soluble in said polyol, 0 to 30% of at least one non volatile base soluble in said polyol, all percentages being by weight and based on total weight of said gel, said polyol having a water content of 5 to 50% by weight based on said polyol, said components being physiologically acceptable.

4,299,232

BIPOLAR ELECTRODES FOR FETAL HEART-RATE RECORDING DURING LABOR

Mario Zilianti, Apartado del Este 62320, Caracas, Venezuela

Filed Jan. 19, 1979, Ser. No. 50,016

Int. Cl.³ A61B *5/04*

U.S. Cl. 128—642 **6 Claims**

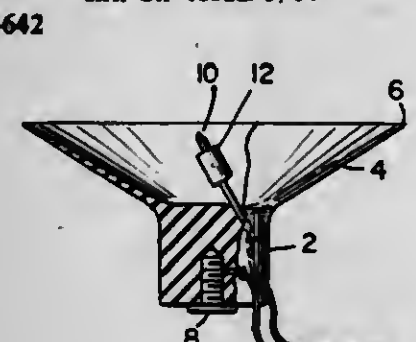

1. A bipolar electrode assembly for fetal heart-rate recording, comprising a cup having a base portion and a flexible substantially frusto-conical portion secured to and flaring outwardly from the base portion and defining a rim of the cup, and the electrode assembly further comprising a first electrode which is pointed and is of rod form and extends into the interior of the cup from said base portion, a second electrode which is attached to the cup and is exposed to the exterior of the cup, and means for connecting the first and second electrodes to opposite poles of a readout instrument, whereby the cup may be applied to the fetal scalp and upon pressing the rim of the cup into contact with the fetal scalp the point of the first electrode pierces the fetal skin and the cup becomes adhered by suction to the fetal scalp while the second electrode makes electrical contact with maternal liquid.

4,299,233

PATIENT MONITORING DEVICE AND METHOD

Jerome H. Lemelson, 85 Rector St., Metuchen, N.J. 08840

Filed Oct. 3, 1979, Ser. No. 81,276

Int. Cl.³ A61B *5/02*

U.S. Cl. 128—687 **10 Claims**

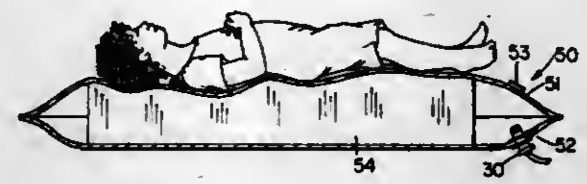

1. An apparatus for detecting body vibrations such as caused by heartbeats and the like comprising:

first means for sensing sounds and transducing the sounds sensed to electrical signals,

second means including a container for a liquid having a flexible top wall on which a person may recline,

a liquid sound transmitting medium contained within said container to provide the body of a person disposed against said flexible top wall in sound coupling relation with said first means,

means for supporting said first means in sound coupling relation with the liquid in said container to permit said transducing means to pick up body sounds of a person reclining on said flexible top wall, which body sounds are transmitted from the body of said person through said flexible top wall of said container and through the liquid in the container to said first means,

sound transmission means connected to said first means for transmitting signals generated by sounds sensed thereby,

receiving means for receiving the signals generated by said first means and transmitted thereto by said transmission means, and

indicating means connected to said receiving means for indicating body sounds generated within the body of a person reclining on said flexible top wall of said container and transmitted through said sound transmission medium within said container.

4,299,234

FETAL HEART RATE MONITOR APPARATUS AND METHOD FOR COMBINING ELECTRICALLY AND MECHANICALLY DERIVED CARDIOGRAPHIC SIGNALS

Paul Epstein, Brookline; John S. Ballas, Jr., Newton; Joseph M. Van Horn, Cambridge, and John J. Mandler, Jr., Allston, all of Mass., assignors to Brattle Instrument Corporation, Cambridge, Mass.

Filed Mar. 30, 1979, Ser. No. 25,720

Int. Cl.³ A61B *5/04*

U.S. Cl. 128—698 **12 Claims**

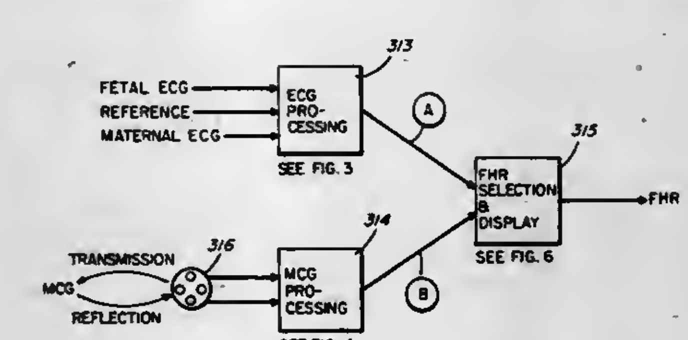

1. Apparatus for generating an output signal indicative of the rate of fluctuation of a human fetal heart, comprising:

(A) means for coupling an input electrocardiographic signal from a fetus-carrying female human to said apparatus;

(B) means for processing said electrocardiographic signal to produce a first electric signal indicative of the rate of fluctuation of the heart of said fetus;

(C) means for coupling an input mechanical cardiographical signal from said human to said apparatus;

(D) means for processing said mechanical cardiographical signal to produce a second electric signal indicative of the rate of fluctuation of the heart of said fetus; and,

(E) means for comparing said electric signals for choosing the better of the two signals to produce an output signal best indicative of said fetal heart rate.

4,299,235

METHOD AND APPARATUS FOR MEASURING COST OF PHYSICAL ACTIVITY

Leonard A. Cohen, 15951 Harden Cir., Southfield, Mich. 48075

Filed Sep. 21, 1979, Ser. No. 78,583

Int. Cl.³ A61B *5/00*

U.S. Cl. 128—718 **11 Claims**

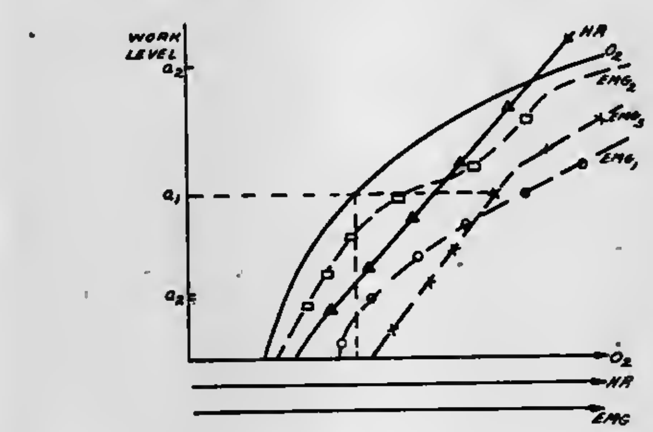

5. A method of measuring the cost of physical activity of a person comprising the steps of:

measuring a parameter having a high correlation to physical energy consumption in a person while said person is in a controlled state of activity;

measuring a second parameter of said person having a high correlation to said first parameter while said person is in said controlled state of activity, said second parameter having a low correlation to emotional energy consumption in both the controlled and freely ambulatory states of activity;

correlating the measurements of said second parameter to said first parameter;

measuring said second parameter while said person is freely ambulatory; and

determining from said measured first parameter and said measured second parameter the physical cost of said freely ambulatory activity.

4,299,236

INCENTIVE BREATHING EXERCISER

Victor L. Poirier, Chelmsford, Mass., assignor to Thermo Electron Corporation, Waltham, Mass.

Filed Oct. 22, 1979, Ser. No. 87,288

Int. Cl.³ A61B *5/08*

U.S. Cl. 128—728 **10 Claims**

1. An inhalation device comprising:

a top member;

an inner bellows including an upper end attached to said top member and a lower end movable towards said top member in response to the withdrawal of air from said inner bellows, said inner bellows having a port in said lower end;

means for permitting a flow of air between the interior of said inner bellows and a location outside said inhalation device;

a valve in the lower end of said inner bellows blocking said port during inhalation until the lower end of said inner bellows is moved to a position adjacent said top member;

valve actuating means for opening said valve during inhalation as the lower end of said inner bellows is moved to a position adjacent said top member;

an outer bellows spaced from an enclosing said inner bellows, said outer bellows including an upper end attached to said top member and a lower end movable towards said

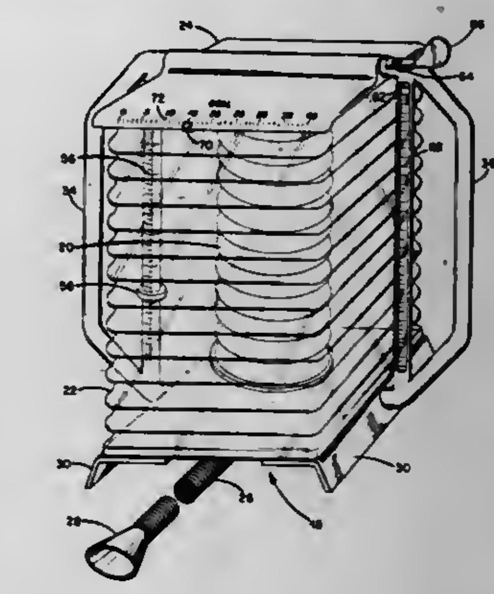

top member during inhalation as air is withdrawn from the volume between said inner and outer bellows; and

means for measuring the volume of air withdrawn from said inner bellows and from the volume between said inner and outer bellows during inhalation.

4,299,237

CLOSED FLOW CALORIC TEST DEVICE

Thomas M. Foti, 10937 Deborah Dr., Potomac, Md. 20854

Division of Ser. No. 926,718, Jul. 21, 1978, Pat. No. 4,190,033, which is a continuation of Ser. No. 771,340, Feb. 23, 1977, abandoned, which is a continuation-in-part of Ser. No. 734,291, Oct. 26, 1976, abandoned. This application Jun. 27, 1979, Ser. No. 52,476

Int. Cl.³ A61B *5/00*

U.S. Cl. 128—742 **21 Claims**

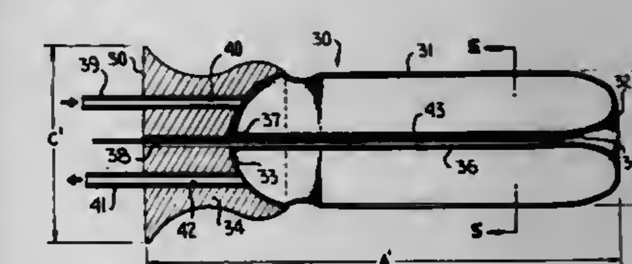

1. Apparatus for carrying out a medical procedure within an animal body cavity, for example an ear canal, comprising:

a receptacle assembly having a proximal part and a hollow, thin-walled portion having at least a distal, closed-ended part, said hollow, thin-walled portion comprising an inflatable, balloon-like member formed of distensible material, said balloon-like member having an end wall section that is distensible between positions spaced closer to and further from the proximal part of said receptacle assembly;

a first fluid flowpath providing communication between the interior and exterior of said balloon-like member, said first fluid flowpath including separate fluid inlet and outlet means into and from said balloon-like member;

means defining at least one additional fluid flowpath connected to said receptacle assembly, said additional fluid flowpath including a distal portion intersecting a wall of said balloon-like member and communicating with the region closely adjacent to and external of said balloon-like member at the area where it intersects said wall, said

additional fluid flowpath comprising an enclosed, separate, fluid communication path between said area adjacent to and external of said balloon-like member and an area adjacent the proximal part of said receptacle assembly, said additional flowpath being totally enclosed within the external boundaries of said receptacle assembly;

said balloon-like member having a wall portion that is inwardly convergent toward the interior of said additional flowpath at the intersection of said additional flowpath and said wall portion of said balloon-like member;

whereby, upon insertion of said balloon-like member into an animal body cavity and movement thereof towards the interior wall of such cavity by inflation of same, fluid circulated through the inlet and outlet of said first fluid flowpath may be circulated within the balloon-like member, and fluid trapped between said end wall section of said balloon-like member and the interior wall of the body cavity may be vented through said additional fluid flowpath to a region adjacent said proximal part of said receptacle assembly.

4,299,238
VENTED PISTON AND PUSH-ROD SUBASSEMBLY FOR USE IN A SYRINGE BARREL
Balinderjeet S. Baidwan, 1236 Garfield, and Dean H. Iwaski, 1465 Monroe St., both of, Denver, Colo. 80206
Filed Jun. 24, 1980, Ser. No. 162,329
Int. Cl.³ A61B *5/14*
U.S. Cl. 128—763 **14 Claims**

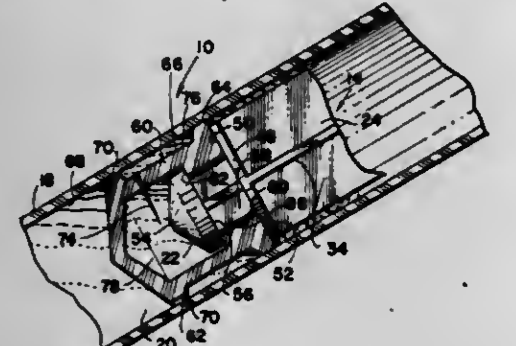

1. In a syringe of the type having a hollow cylindrical barrel open at both ends and with its open front end adapted to receive a needle, the improved vented piston and push-rod subassembly for insertion into its open rear end in plug-forming relation thereto which comprises: a cup-shaped piston formed from an elastic material having a hollow interior with a rear-opening entryway bordered at the front end by a front forwardly-facing annular sealing surface and at the rear end by a rear rearwardly-facing annular sealing surface, said piston also having a continuous annular rib encircling same effective upon insertion into the barrel to form a fluid and air-tight seal in wiping contact therewith, said piston further including means for admitting both fluids and air into the hollow interior thereof ahead of said continuous annular rib, said means comprising a discontinuous rib spaced forwardly of the continuous one and a medial section of reduced cross section between said ribs with an opening therethrough; and, a push-rod terminating at its forward end in a necked-down head cooperating therewith to define a front rearwardly-facing annular sealing surface and a rear forwardly-facing annular sealing surface spaced therebehind, said head being sized for insertion through the entryway into the piston so as to form a plug therefor while cooperating therewith to define a fluid collection chamber within the hollow interior thereof, the front forwardly-facing annular sealing surface of said piston and the front rearwardly-facing annular sealing surface of said push-rod cooperating upon the application of a force to the latter in a direction to retract same to define a continuous annular fluid and air-tight seal therebetween effective to aspirate fluid into said barrel when mounted therein, the rear rearwardly-facing annular sealing surface of said piston and the rear forwardly-facing annular sealing surface of said push-rod also cooperating upon the application of a force to the latter in a direction to extend same to define a continuous annular fluid and air-tight seal therebetween effective to discharge fluid from the open front end of said barrel when in place therein, and all four of said sealing surfaces between said piston and push-rod cooperating when no force is applied to the latter in either direction to define a continuous annular fluid-tight seal between said front sealing surfaces effective to vent air rearwardly past the piston from the hollow interior thereof while retaining all fluids collected in its fluid collection chamber.

4,299,239
EPICARDIAL HEART LEAD ASSEMBLY
Lee E. Weiss, Pittsburgh, and Michael J. Dalton, Morrysville, both of Pa., assignors to Intermedics, Inc., Freeport, Tex.
Filed Feb. 5, 1979, Ser. No. 9,215
Int. Cl.³ A61N *1/04*
U.S. Cl. 128—785 **1 Claim**

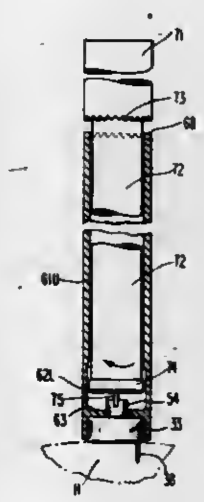

1. The combination of a lead and an insertion assembly for inserting said lead into a heart wall, comprising:

a. a lead for delivering cardiac pacing signals, said lead having a conductor length and a distal portion comprising movable fixation means, said fixation means being mounted for movement at an angle to said conductor length and movable relative to the distal lead portion and independently of said conductor length;

b. an insertion tool for holding said distal portion while maintaining the remainder of said lead free, said insertion tool comprising a substantially hollow cylinder having an upper portion of a first smaller inner diameter and a lower portion of a second larger inner diameter, said lower portion being adapted to friction capture said lead distal portion; and

c. a screwdriver tool for moving said fixation means relative to said distal lead portion, and at an angle to and without moving said conductor length, said screwdriver tool being positioned within said insertion tool, said screwdriver tool having an annular element with a diameter intermediate said insertion tool upper portion inner diameter and lower portion inner diameter, whereby when said annular element is positioned in said insertion tool smaller diameter upper portion it causes outward expansion of the entire insertion tool, thereby altering the dimensions of said insertion tool and providing for release of said insertion tool from said lead distal portion.

4,299,240
METHOD FOR STYLING HAIR
Coleda J. Failing, 2109 W. Broadway, Oklahoma City, Okla. 73701
Continuation-in-part of Ser. No. 879,275, Feb. 21, 1978, abandoned. This application Jun. 26, 1979, Ser. No. 52,447
Int. Cl.³ A45D *7/00*
U.S. Cl. 132—7 **5 Claims**

1. An improved method for styling hair, comprising the steps of:

applying a stable foam, capable of retaining its form upon manipulation, to clean, damp hair to form a pliable mass of hair and foam;

shaping the pliable mass in sections, each section being retained, unassisted by mechanical styling aids, in a determined sculptured shape by the stable foam;

drying the shaped pliable mass, the pliable mass becoming set in a semi-rigid sculptured shape upon drying the foam; and

brushing the semi-rigid hair to finally shape the hair and to remove the foam residue.

4,299,241
HINGE FOR HAIR CLIP, BARRETTE OR THE LIKE
Seiller Pierre F. X., Proulieu-Lagnieu (Ain), France
Filed Apr. 14, 1978, Ser. No. 896,393
Claims priority, application France, Apr. 15, 1977, 77 11968
Int. Cl.³ A45D *8/24*
U.S. Cl. 132—48 R **5 Claims**

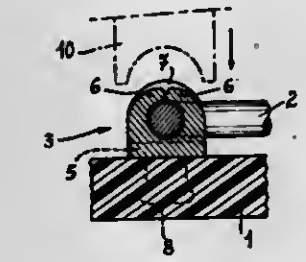

1. A hinge fitting for making a hinge between a bent-wire arm and a body, said hinge fitting comprising a rectangular base, a pair of cleats projecting from one side of said base along the longitudinal edges thereof inwardly of the ends of the base unitarily therewith and adapted to receive a wire between them, and a pair of nonperforated lugs projecting upwardly from said side of said base along the short edges thereof outwardly of said cleats and unitary with the base to define imperforate cheeks spaced from said cleats and limiting axial displacement of said wire between said cleats, said cleats being bent toward one another over said wire to pivotally receive the same, said base being formed with a pair of tenons projecting from the opposite side thereof and adapted to be anchored in said body, said cleats defining a U-section channel with said base in cross section through said base.

4,299,242
METHOD OF MAKING ARTIFICIAL EYELASHES
Sunjeen Choe, 2938 S. Oakhurst Ave., Los Angeles, Calif. 90034
Continuation of Ser. No. 901,697, May 1, 1978, abandoned. This application Jan. 21, 1980, Ser. No. 113,763
Int. Cl.³ A41G *3/00*
U.S. Cl. 132—53 **13 Claims**

1. A method of fabricating artificial eyelashes comprising the steps of

(a) tying at least one strand of eyelash material to a string support, the strand being tied to the support at a point intermediate its ends so as to provide at least two simulated lashes extending away from the support;

(b) placing the lashes and string support against a support surface to provide a temporary backing on one side of the support and eyelash material;

(c) physically securing the lashes together at an intermediate point between the tie point and the free ends of the strand by pressing the lashes into contact with the support surface with a heating and bonding implement applied to the side of the eyelash material opposite the support surface,

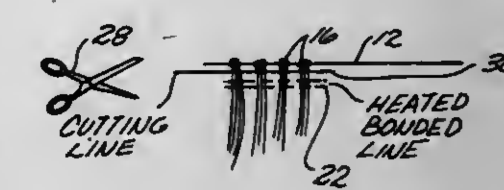

the intermediate point corresponding to a desired artificial eyelash length; and

(d) separating the eyelashes from the tie point on the string support along a line between the tie point and the intermediate point of securing of the lashes to produce at least one pair of lashes secured together at one end and free at the opposite end.

4,299,243
FINGERNAIL REINFORCING METHOD
Karen Umstattd, 2612 Boll St., Dallas, Tex. 75204
Filed Nov. 24, 1980, Ser. No. 209,512
Int. Cl.³ A45D *29/00*
U.S. Cl. 132—73 **4 Claims**

1. A method for protecting a fingernail, comprising the steps of:

(a) applying a first coat of adhesive to a portion of the nail surface;

(b) applying a piece of reinforcing material over the first coat of adhesive;

(c) shaping the reinforcing material to conform to the shape of the nail;

(d) applying a second coat of adhesive to the reinforcing material so that the reinforcing material is saturated by the adhesive;

(e) shaping the impregnated reinforcing material to conform to the shape of the nail;

(f) buffing the surface of the reinforcing material until it is substantially flush with the nail surface;

(g) applying a third layer of adhesive to the surface of the reinforcing material; and,

(h) buffing a second time until the surface of the reinforcing material is substantially flush with the surface of the nail.

4,299,244
ENDOSCOPE WASHING APPARATUS
Jin Hirai, No. 2852 Yutaka-cho, Hamanmatsu City, Shizuoaka Prefecture, Japan
Filed Aug. 2, 1979, Ser. No. 63,331
Int. Cl.³ B08B *3/04, 9/02, 11/02*
U.S. Cl. 134—102 **23 Claims**

1. A washing apparatus for an endoscope including a flexible optical-fiber tube, comprising a grooved member formed with an upwardly open, lengthwise continuous groove, liquid supply means for feeding liquid into said groove, and air injecting means for injecting a multiplicity of streams of air into the liquid in the groove for thereby producing a myriad of foams of air in the liquid in the groove, wherein said air injecting

means comprises a lower member attached to the underside of said grooved member and forming between the grooved and lower members an air passageway below said groove, said grooved member being further formed with a multiplicity of perforations each providing communication between said groove and said air passageway, and wherein said liquid supply means comprises a water supply passageway communicable with a source of water, a solution reservoir for storing a chemical solution therein, a solution delivery passageway communicable with said solution reservoir, a water-flow cut-off valve having an inlet port communicating with said water supply passageway, a solution-flow cut-off valve having an inlet port communicating with said solution delivery passageway, and a liquid outlet element located in the neighborhood of one end of said groove, said water-flow cut-off valve and said solution-flow cut-off valve having respective outlet ports which are jointly in communication with said liquid outlet element.

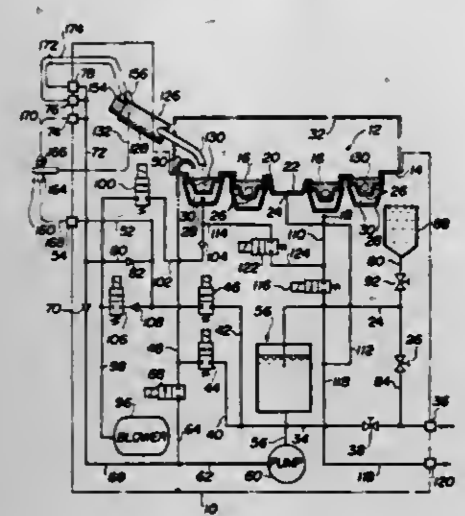

4,299,245
FILTER CLEANING SYSTEM
Millard F. Clapper, Terrace Dr. R.D. #3, Binghamton, N.Y. 13901
Filed Apr. 21, 1980, Ser. No. 141,964
Int. Cl.³ B08B *3/02, 9/00*
U.S. Cl. 134—140 **4 Claims**

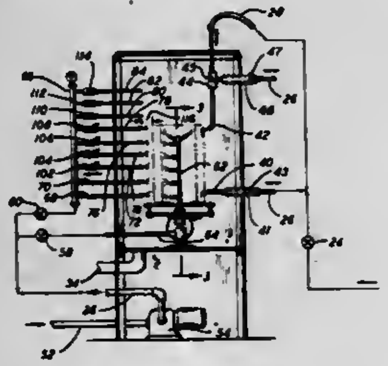

1. Apparatus for cleaning filters, comprising:
An enclosed housing; a rotary turntable mounted within said housing for supporting said filter to be cleaned;
A first spray mechanism having a plurality of washing nozzles for washing an interior surface of said filter;
A second spray mechanism positioned to clean an exterior surface of said filter, the position of said second spray mechanism being adjustable relative to said first spray mechanism and to said exterior surface of said filter;
Means for rotating said turntable and;
Means for supplying a washing liquid at a pressure above main pressure to said first and second spray mechanism.

4,299,246
WALKING AIDS
John W. K. Marsh, "North Lodge", Fawkham Manor, Fawkham, Dartford, Kent, England
Filed Mar. 19, 1980, Ser. No. 131,566
Claims priority, application United Kingdom, Mar. 21, 1979, 094846/79; Apr. 27, 1979, 914662/79
Int. Cl.³ A45B *3/00*
U.S. Cl. 135—66 **6 Claims**

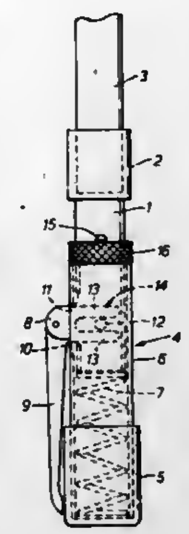

1. A walking aid comprising a body, a ground engaging member mounted at one end of the body, the body being movable relative to the ground engaging member, and a lever pivotably mounted on said ground engaging member, the body having means to actuate the lever so as to cause pivotal movement of the lever when the body moves relative to the ground engaging member, whereby an object on the ground may subsequently be retrieved by a gripping action between the lever and the ground engaging member, the walking aid comprising selectively operable means for preventing relative movement of the body and the ground engaging member, wherein said selectively operable means comprises a ring rotatably disposed between the body and the ground engaging member and a projection carried by the body which is normally on the side of the ring remote from the ground engaging member, the ring having a slit for the passage of the projection so as to allow movement of the body relative to the ground engaging member.

4,299,247
FUEL TANK VENT
Russell D. Keller, 1750 SE. Risley, Milwaukie, Oreg. 97222
Continuation-in-part of Ser. No. 2,242, Jan. 10, 1979. This application Jan. 3, 1980, Ser. No. 107,977
Int. Cl.³ F16K *17/36*
U.S. Cl. 137—43 **8 Claims**

1. A fuel tank vent apparatus, comprising:
a vent body adapted to be secured within an opening in a liquid fuel tank and having a passageway extending therewithin from a vent inlet adapted to be located within said tank to a vent outlet adapted to be located externally of said tank,
a valve located in said passageway for controlling the flow of fluid through said passageway, and an operating member for said valve, said operating member having an upper position for closing said valve and a lower position for opening said valve,
biasing means for urging said operating member toward its upper position,
and a weighted member bearing downwardly onto said operating member, when said vent body is in a substantially upright attitude, for holding the operating member downwardly against the bias of said biasing means,
wherein said operating member comprises an operating rod extending longitudinally of said vent body, said weighted member normally engaging the upper end of said operating rod for urging the same downwardly against the bias of said biasing means,
said vent body having an enclosure for receiving said weighted member in adjacent relation to said operating member, wherein said enclosure is larger than said weighted member for providing said weighted member latitude for movement at least partially out of downward bearing relation with respect to said operating member when said vent body becomes inclined so that said biasing means can move said operating member upwardly and close said valve, said weighted member returning to downwardly bearing relation with said operating member sufficiently to reopen said valve when said vent body is then uprighted,
wherein said vent body includes a lower portion having said vent inlet communicating at a side thereof, said valve comprising a cylindrical piston slidably received in a cylindrical portion of said passgeway in said lower portion for closing off said vent inlet when said piston is in an upper position.

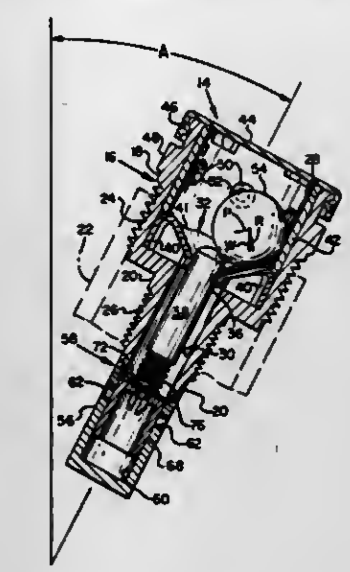

4,299,248
DIAPHRAGM VALVE AIR VENT DEVICE FOR WATER SYSTEMS
Bernard B. Becker, Belmont; John K. Bowman, Brighton, and Joseph A. Lane, Taunton, all of Mass., assignors to Amtrol Inc., West Warwick, R.I.
Filed Mar. 13, 1979, Ser. No. 20,087
Int. Cl.³ F16K *31/34*
U.S. Cl. 137—202 **9 Claims**

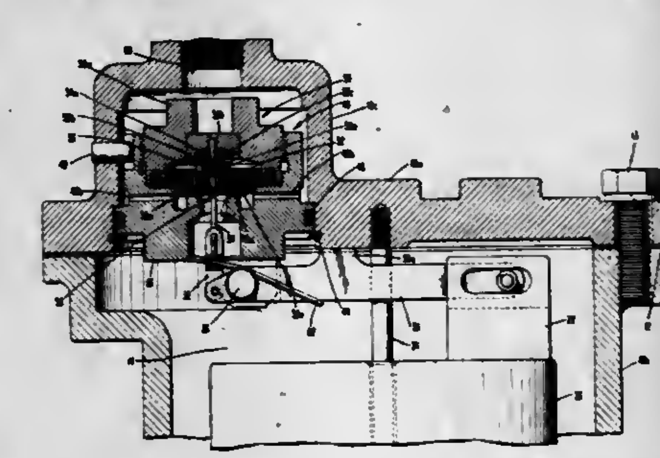

1. A device to automatically vent entrapped air from a water system comprising:
(a) a housing having an inlet connected to said water system to allow passage of water and air into said housing and an air outlet to allow air to escape from said housing;
(b) a cavity in said housing, interposed between said inlet and said air outlet,
(c) pilot valve-operated diaphragm valve means comprising a valve seat structure containing an upwardly facing rigid valve seat member having a central aperture communicating with the interior of said housing, a pilot valve-operated flexible diaphragm valve member having a sealing surface which faces downward and sealing engages against said rigid valve seat member, said diaphragm valve member having a central aperture, a chamber located above said flexible diaphragm member, on the side of said flexible diaphragm member opposite said sealing surface, said chamber communicating with said central aperture of said diaphragm valve member, a retaining means to position and retain said flexible diaphragm member in said valve seat structure such that said sealing surface on said flexible diaphragm member is in contact with said rigid valve seat member, said retaining means having a central aperture which is aligned with and communicates with said central aperture of said diaphragm valve member, and a pilot valve pin slidably located in said central aperture of said diapragm valve member, at least one passageway being located in the lower portion of said pilot valve pin, said lower passageway allowing communication between said cavity in said housing and said central aperture in said diaphragm valve member when said diaphragm valve member sealingly engages said valve seat member and not being in such communication position once said lower passageway has moved entirely within said central aperture of said diaphragm valve member or when such sealing engagement does not exist, said pilot valve pin allowing communication between said chamber and said air outlet when said sealing engagement does not exist, at least one passageway or indentation being located in the upper portion of said pilot valve pin, said upper passageway or indentation allowing communication between said chamber and said air oulet once said diaphragm valve member is not in the sealing position, said pilot valve-operated diaphragm valve means selectively opening and closing said air outlet, the air pressure within said housing being used to open and close said diaphragm valve means; and
(d) float means within said housing operatively connected to said pilot valve pin, said float means rising and falling as the water level in said housing rises and falls such that when said float means reaches a first predetermined lower position said pilot valve pin no longer allows communication between said chamber and said cavity, when said float means reaches a second predetermined lower position said pilot valve pin causes said diaphragm valve to open and vent air through said air outlet, via a passageway from said central aperture of said rigid valve seat member to said air outlet, said upper passageway or indentation in the upper portion of said pilot valve pin being in a position which allows communication between said chamber and said air outlet, and when said float means reaches a predetermined upper position said pilot valve pin causes said diaphragm valve to close by allowing passage of air from said housing to said chamber located above said diaphragm valve means, which returns to said sealing position, said diaphragm valve member being in engagement with said rigid valve seat member whenever said float means is in its up sealing position or the air pressure in said chamber is equal to or greater than the air pressure in said cavity.

4,299,249
DEVICE AT HOSE REELS
Bill P. Nederman, Halalid 3, S-252 33 Helsingborg, Sweden
Filed Dec. 17, 1979, Ser. No. 104,656
Claims priority, application Sweden, Dec. 18, 1978, 7812959
Int. Cl.³ B65H *75/44*
U.S. Cl. 137—355.17 **2 Claims**

1. A hose reel comprising:
a hollow rotatable shaft supporting a reel having a windable

hose thereon communicating with the interior of said hollow shaft;
a first tubular conduit in said hose and extending into said hollow shaft;
a tubular swivel shaft rotatable in said hollow shaft and being connected to a stationary hose section having a second tubular conduit therein; and

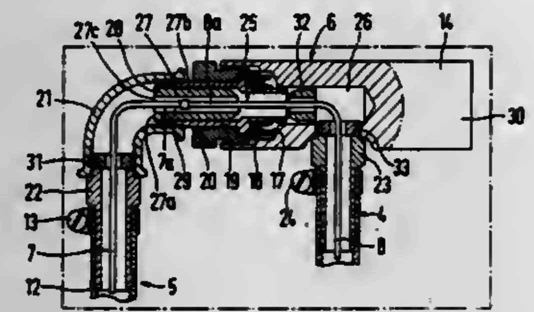

a bearing element in said swivel shaft and having outer axial passages providing communication between said windable hose and said stationary hose section, and an inner passage into which said first and second tubular conduits extend, said bearing element having only a stop portion outside of and engaging an end of said swivel shaft.

4,299,250
CHECK AND REGULATOR VALVE
Peter Happe, Eggenstein, Fed. Rep. of Germany, assignor to Johann Baptist Rombach GmbH & Co. KG, Karlsruhe, Fed. Rep. of Germany
Filed Mar. 28, 1979, Ser. No. 24,509
Claims priority, application Fed. Rep. of Germany, Mar. 28, 1978, 2813226
Int. Cl.³ F16K *15/14*
U.S. Cl. 137—546 **18 Claims**

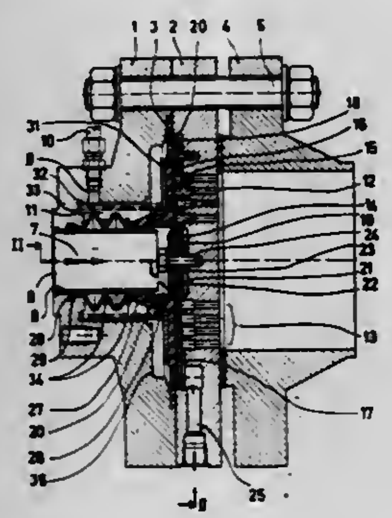

1. A check and regulator valve for conducting gaseous media comprising:
(a) a valve housing having inlet and outlet passage means for enabling a flow of said media through said housing;
(b) a valve seat positioned within the said housing between said inlet and outlet means, said valve seat being in the shape of a circular plate having through-flow openings for passage of said media, said valve seat further includes a shallow circular-cylindrical recess, bushing means being inserted in each of said through-flow openings, the bushing means extend into the recess; and
(c) an elastically flexible disk, wherein said disk is mounted at a rim thereof to said housing and is provided with a central aperture for enabling said flow of said media to pass therethrough from said inlet means to said outlet means and an axially resilient tubular section sealingly connected at one end to said disk at a location circumferentially adjacent the aperture and to said inlet passage means at an opposite end in a manner forming a pressure chamber in said housing on one side of said disk with said disk selectively sealably engaging said valve seat on a second side thereof for controlling flow through said openings.

2. A check and regulator valve for conducting gaseous media comprising:
(a) a valve housing having inlet and outlet passage means for enabling a flow of said media through said housing;
(b) a valve seat positioned within said housing between said inlet and outlet means, said valve seat being in the shape of a circular plate having through-flow openings for passage of said media; and
(c) an elastically flexible disk, wherein said disk is mounted at a rim thereof to said housing and is provided with a central aperture for enabling said flow of said media to pass therethrough from said inlet means to said outlet means and an axially resilient tubular section sealingly connected at one end to said disk at a location circumferentially adjacent the aperture and to said inlet passage means at an opposite end in a manner forming a pressure chamber in said housing on one side of said disk with said disk selectively sealably engaging said valve seat on a second side thereof for controlling flow through said openings and wherein a guide sleeve is attached to said inlet passage means and extends into said axially resilient tubular section.

4,299,251
OPTICAL VALVE POSITION SENSING
Roger A. Dugas, Chester, N.H., assignor to Hewlett-Packard Company, Palo Alto, Calif.
Filed Sep. 4, 1979, Ser. No. 72,515
Int. Cl.³ F16K *37/00, 11/085*
U.S. Cl. 137—556 **6 Claims**

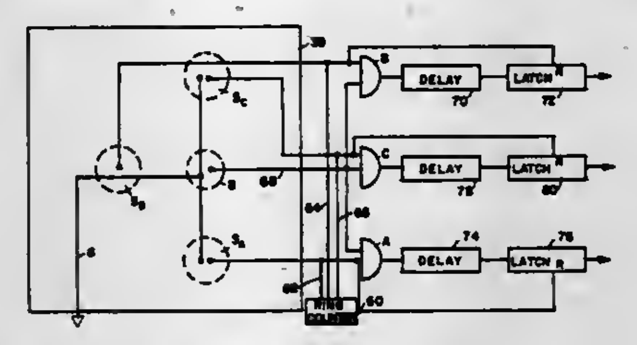

1. A disposable valve structure, comprising
a lid,
means defining a cylindrical hole in said lid, said hole having an axis,
means defining passageways in said lid respectively communicating with the cylindrical wall of said hole at respective various points that are angularly displaced around its cylindrical periphery,
a valve body having a cylindrical stem mounted for rotation about its axis in said hole, its axis coinciding with the axis of said hole, said stem containing channel means for communicating between said passageways at said various points, said channel means including respective openings angularly displaced around its cylindrical outer surface so as to provide communication between selected ones of said passageways in said lid depending on the rotational position of said valve body, and
a light reflecting means including means mounting said light reflecting means so as to allow said light reflecting means to rotate about a given axis corresponding to the rotation of said valve body about its axis, said light reflecting means reflecting light which may approach it along one path into a direction away from it along another path that is spaced from and parallel to said one path, one of said paths being coextensive with the given axis about which said light reflecting means rotates, said valve structure being adaptable such that light passing toward the light reflecting means along one path and out the other may be used to determine the rotational position of said valve body.

6. A multiposition valve assembly that produces a signal indicative of the position of the valve, comprising
a lid,
means defining a cylindrical hole in said lid, said hole having an axis,
means defining passageways in said lid respectively communicating with the cylindrical wall of said hole at respective points angularly displaced around its periphery,
a valve body having a cylindrical valve stem mounted for rotation about its axis in said hole, its axis coinciding with the axis of said hole, said stem containing channel means communicating with said respective points that are angularly displaced around its cylindrical outer surface so as to provide communication between selected passageways in said lid via said channel means depending on the rotational position of the valve body,
light reflecting means for reflecting light approaching it along a first path into a direction away from it along a second path that is spaced from and parallel to said first path,
means mounting said light reflecting means to said valve stem so that said second path is coextensive with the axis of said valve stem,
a base,
means for removably attaching said base to said lid so that said light reflecting means is between them,
light sources affixed to said base at points on the locus of the intersection of said first path of said light reflecting means as it revolves about its second path, said light sources emanating a beam of light in a direction parallel to said first path, the angular spacing about said first path of said light sources corresponding to the angular spacing about the axis of said stem of the points at which the passageways in said lid communicate with the cylindrical wall of said hole,
a light receiver that produces an electrical signal when light impinges on it mounted on said base so as to receive light leaving said light reflecting means along said second path,
means for applying electrical energizing pulses to said sources so as to cause them to respectively emanate light in a repeated sequence, and
means for producing a separate electrical output signal in response to the coincidence of each of said energizing pulses and an electrical signal produced by said receiver.

4,299,252
PERMANENT MAGNET BOOSTED ELECTROMAGNETIC ACTUATOR
Robert H. Reinicke, Mission Viejo, Calif., assignor to Consolidated Controls Corporation, El Segundo, Calif.
Filed Jul. 5, 1979, Ser. No. 54,857
Int. Cl.³ F16K *11/04, 31/06*
U.S. Cl. 137—625.5 **14 Claims**

13. In an electromagnetic actuator, the combination of, a housing of magnetic material having a pair of pole pieces positioned in spaced apart relation along an axis thereof, an armature having pole faces on opposite ends thereof and movable along said axis between said pole pieces, an annular radially magnetized permanent magnet positioned in said housing and concentric with said axis, a single actuator coil positioned in said housing concentric with said axis, biasing means for urging said armature into engagement with one of said pole pieces when said coil is de-energized, the flux of said permanent magnet being diverted from the armature pole face adjacent said one pole piece to the armature pole face adjacent the other pole piece when said coil is energized so that said armature is moved into engagement with said other pole piece against the force of said biasing means, said armature pole faces and said pole pieces being shaped so that upon de-energization of said coil a sufficient portion of said permanent magnet flux is diverted back to said one pole piece to permit said biasing

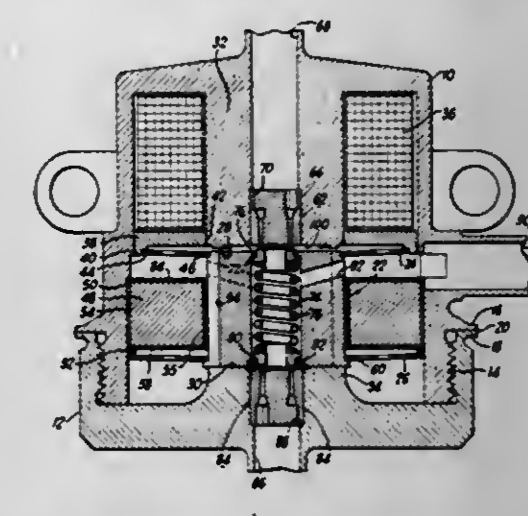

means to return said armature into engagement with said one pole piece.

4,299,253
PULSATION DAMPENER
James A. Burton, Houston, Tex., assignor to Hydril Company, Los Angeles, Calif.
Filed Nov. 26, 1979, Ser. No. 97,538
Int. Cl.³ F16L *55/04*
U.S. Cl. 138—30 **1 Claim**

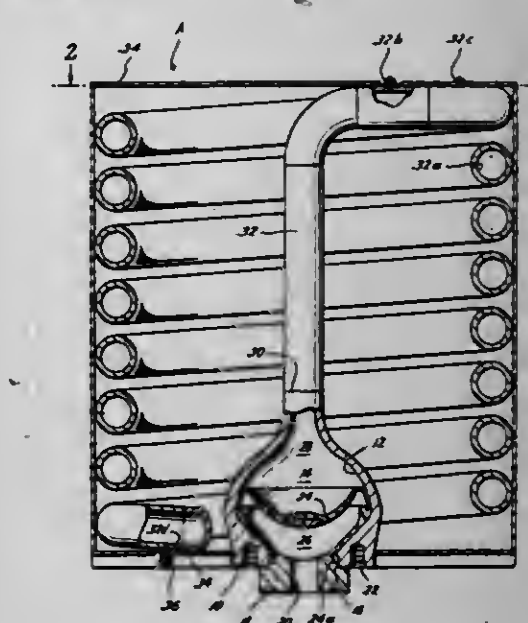

1. A compact tuned pulsation dampener apparatus for achieving high attenuation at a narrow frequency range to produce a substantially pulsation free quiet band in a working fluid for enabling transmission of information by controlled pressure pulses through the working fluid including:
a pressure vessel forming a cavity means for receiving and containing fluid under pressure in said cavity means, said pressure vessel having a first opening and a second opening formed therethrough;
an inlet nozzle disposed in said first opening and having a flow passage for permitting ingress and egress from said cavity means of working fluid subject to the undesired pressure pulses in the narrow frequency range which are to be dampened;
a flexible diaphragm disposed in said cavity for dividing said cavity means into a first zone for receiving the working fluid and a second zone for receiving and containing a second pulsation dampening liquid fluid, said first zone communicating with said flow passage of said first inlet nozzle for permitting ingress and egress of the working fluid;
an elongated tube secured at one end to said pressure vessel

with an internal opening of said tube communicating with said second opening of said pressure vessel, said elongated tube formed in a helical coil of selected tuned length about said pressure vessel to minimize the installed size of the tuned pulsation dampener apparatus;

means for closing the internal opening of said tube at a second end of said tube; and

a liquid state silicone pulsation dampening fluid filling said second zone and said internal opening of said tube, said silicone liquid state fluid having a preselected low bulk modulus to enable operative relative compression thereof by the working fluid and for also producing a reflected signal from the closed end of said internal opening of said tube that is tuned 180° out of phase with the incident pulsation wave in the working fluid to produce an attenuated quiet band in which selected information may be transmitted by controlled pressure pulses in the working fluid.

4,299,254

PRESSURE ACCUMULATOR HAVING A LONG LIFE DISTENSIBLE BLADDER

Abduz Zahid, Los Angeles, Calif., assignor to Greer Hydraulics, Incorporated, Chatsworth, Calif.

Filed Jan. 21, 1980, Ser. No. 113,490

Int. Cl.³ F16L *55/02, 55/04*

U.S. Cl. 138—30 **1 Claim**

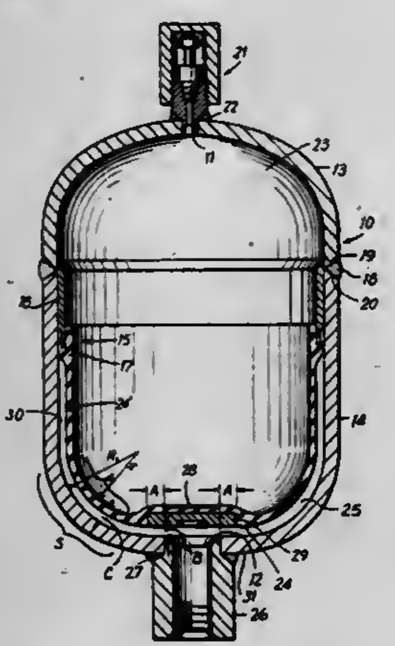

1. A hydraulic accumulator device of the type comprising a pressure vessel having an interior surface defining an interior space which is cylindrical in section and has generally hemispherical end portions, one of said end portions including a gas charging port, the other of said end portions including a circular oil port whose center is aligned with the longitudinal axis of said vessel, the interior surface of said vessel, surrounding said oil port, being generally planar, a bladder of resilient distensible material received within said vessel, said bladder being cylindrical in section and coaxially oriented with respect to said vessel, said bladder including a first end portion secured to said vessel interior surface and disposed toward said gas charging port, and a second closed generally hemispherical end directed toward said oil port, said second closed end being in spaced conformance to the interior surface of vessel and including a central generally planar outer surface in spaced overlying relation to the generally planar interior surface surrounding said oil port, said bladder, throughout the full extent thereof inward of said first end and in its unstressed position, including a smooth outer wall surface in inwardly spaced relation to the interior surface of the vessel and defining a space between the bladder and said interior surface, said central generally planar outer surface of said second closed end comprising a portion of said smooth outer wall surface, said bladder dividing the interior of said vessel into two chambers in communication, respectively, with said oil and said gas ports, said bladder including a rigid valve member generally in the form of a disk in the planar outer surface of said closed end, said valve member being circular in section and having a generally planar outer surface generally coplanar with the planar outer surface of said closed end of the bladder, said valve member being coaxially disposed with respect to said longitudinal axis, said valve member including a peripheral edge which, in the unstressed position of said bladder, extends beyond an upward projection of said oil port, at every point thereabout, by a distance A greater than the spacing B of the planar outer surface of the valve member closest to said oil port, measured in the direction of the axis of said vessel from said oil port, and by a distance C greater than said space between the bladder and the interior surface of the vessel.

4,299,255

EMERGENCY PIPELINE SHUT-OFF APPARATUS

John H. Miller, 402 N. 10th St., Manitowic, Wis. 54220

Filed Apr. 16, 1979, Ser. No. 30,311

Int. Cl.³ F16L *55/10;* B23B *41/08*

U.S. Cl. 138—89 **9 Claims**

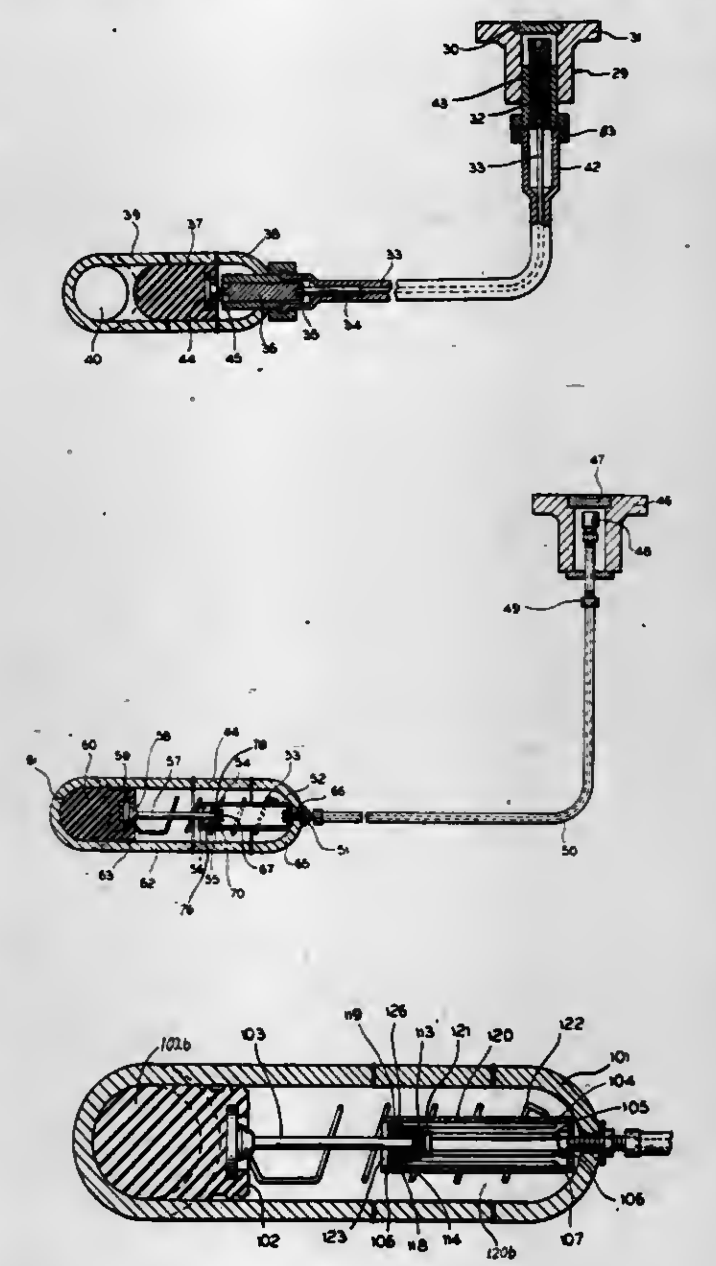

1. An emergency pipeline shut-off apparatus for interposition within a fluid transmitting pipe circuit said apparatus comprising:

apparatus housing means capable of being positioned into said pipe circuit and for attachment therewith;

resilient plug stopper means capable of being alternatively operated between a retracted-open position and an extended-closed position to interrupt the passage of said fluid;

stopper control means operatively attached to a rear side of said plug stopper means and positioned within said housing for controlling the alternative retraction and extension of said stopper;

remote stopper activation means attached to and operatively activating said control means to in turn control said stopper means from a position remote to said apparatus housing means,

said remote stopper activation means comprising rotatable cable activation means,

said rotatable cable activation means comprising a cable in a cable housing with a proximate and a remote end, and means for imparting rotation to said cable, as well as means for attaching the proximate end of said cable to said stopper control means in said apparatus housing,

said rotation imparted to said cable rotating said control means to in turn alternatively extend or withdraw said plug stopper means; and

stopper locking means for automatically and fixedly restraining said plug stopper means after positioning into said extended-closed position thereby precluding inadvertent retraction of said plug stopper means.

4,299,256

COEXTRUDED SILICONE-CONTAINING TUBING HAVING LONG TERM FRICTIONAL LUBRICATION PROPERTIES

David V. Bacehowski, Wildwood; Peter C. Kwong, Palatine; Harold H. Bowerman, Jr., Mundelein, and Leonard F. Czuba, Lombard, all of Ill., assignors to Baxter Travenol Laboratories, Inc., Deerfield, Ill.

Filed Oct. 6, 1980, Ser. No. 194,205

Int. Cl.³ F16L *11/04*

U.S. Cl. 138—137 **5 Claims**

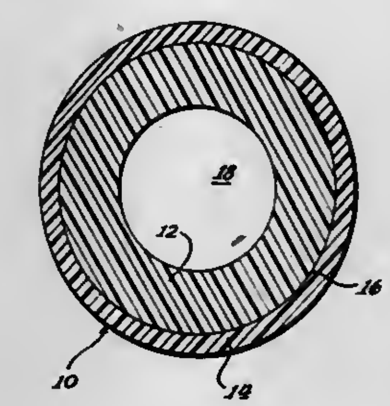

1. A coextruded plastic tubing having a permanently lubricated outer surface which comprises a pair of telescopically related inner and outer cylindrical portions, said inner portion comprising a substantially silicone-free flexible plastic formulation which has a radial thickness of 2 to 4 times that of the outer portion, said outer portion comprising a polyvinyl chloride plastic formulation containing from 2 to 3 percent by weight of a silicone oil comprising dimethylpolysiloxane having a viscosity of 500 to 100,000 cs. at 25° C., said outer portion having a radial thickness of at least 0.025 cm.

4,299,257

SELVAGE FORMING DEVICE

Shinichi Kinoshita, Neagari, Japan, assignor to Tsudakoma Kogyo Kabushiki Kaisha, Japan

Filed May 7, 1979, Ser. No. 36,431

Claims priority, application Japan, May 19, 1978, 53/60320; Jun. 23, 1978, 53/76821

Int. Cl.³ D03D *5/00, 47/40*

U.S. Cl. 139—54 **22 Claims**

1. An improved selvage forming device comprising

a pair of spacedly arranged parallel and vertical rods,

means for driving said vertical rods to opposite vertical movement in such a manner that, when one rod moves upwards or downwards over a prescribed distance, the other rod concurrently moves downwards or upwards over an equal distance,

a pair of upper and lower holders idly inserted over said pair of vertical rods,

means for resiliently urging said upper and lower holders on a movement away from each other in such a manner that said upper holder follows a downward movement of either said vertical rod over an equal distance whereas said lower holder follows an upward movement of either said vertical rod over an equal distance,

a stopper fixed about the middle of one said vertical rod,

an intermediate holder idly inserted over said pair of vertical rods at a position above said stopper in such an arrange-

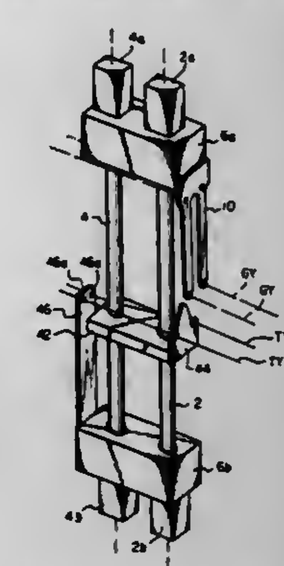

ment that, in the completely closed state of the shed, said intermediate holder rests on said stopper and a prescribed length of gap for a relative vertical movement is left between the lowest face thereof and the highest face of said lower holder,

a tension spring interposed between said intermediate and lower holders,

a downwardly extending guide needle held by said upper holder and provided with at least one thread guide hole for a ground warp in a ground warp plane, and

means for distributing at least one leno warp alternately onto the different lateral sides of said ground warp once in every pick in accordance with said relative vertical movement between said intermediate and lower holders.

4,299,258

METHOD OF INSECTICIDE APPLICATION

Alan D. Brite, 5147 W. Jefferson Blvd., Los Angeles, Calif. 90061

Filed Jul. 2, 1979, Ser. No. 53,986

Int. Cl.³ B65B *1/16*

U.S. Cl. 141—1 **4 Claims**

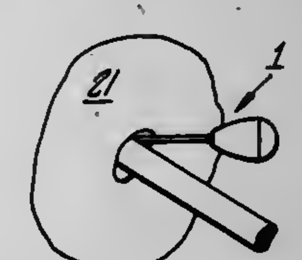

1. A method of solid insecticide application comprising:

inserting at least the tip portion of a pipette into a container of insecticide containing a powdered mixture of powdered boric acid, denatonium benzoate, magnesium stearate and a non-white powdered pigment;

collapsing, at least partially, by means of external pressure a resilient bulbous portion of said pipette, and then releasing

said external pressure thereby allowing for the opening of said bulbous portion to its initial size thereby;
drawing said solid insecticide into at least the tip and stem portions of said pipette;
inserting said tip portion into an aperture located along a junction of erected construction material; and
collapsing, at least partially, by means of external pressure, said resilient bulbous portion of said pipette and thereby; forcing said solid insecticide into and through said aperture.

4,299,259
LEAD STORAGE BATTERY PLATES AND METHOD OF MAKING THE SAME
Hiroshi Sugimoto, Fujisawa; Shinji Karasawa, Chigasaki; Kisuke Noshi, Fujisawa; Teruaki Ishii, Yamato, and Sigeki Matsuzawa, Fujisawa, all of Japan, assignors to Matsushita Electric Industrial Co., Ltd., Osaka, Japan
Filed Apr. 2, 1979, Ser. No. 26,228
Int. Cl.^{3} B65B *3/04;* **H01M** *4/82*
U.S. Cl. 141—1.1 **4 Claims**

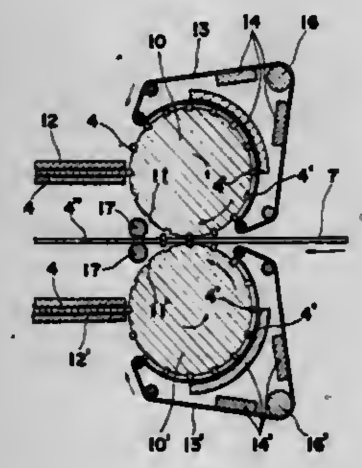

1. A method of making lead storage battery plates, comprising the steps of forming an elongated strip of reticulated sheet material having openings therein and having unreticulated portions along the opposite edges thereof, placing elongated bodies of synthetic resin at intervals along said elongated strip extending across the strip at least to the unreticulated portions and adhering said elongated bodies to said strip, filling pasty active mterial into the openings of said strip, and then cutting the strip and said elongated bodies transversely of the strip along lines intermediate the edges of said elongated bodies for separating the battery plates from the strip.

4,299,260
HYDROCARBON PRODUCTION TERMINAL
Martin B. Jansen, Agoura, Calif., assignor to Amtel, Inc., Providence, R.I.
Continuation-in-part of Ser. No. 49,960, Jun. 18, 1979. This application Nov. 6, 1979, Ser. No. 91,821
Int. Cl.^{3} B65B *3/04;* **F16L** *39/04*
U.S. Cl. 141—311 R **9 Claims**

1. In an offshore undersea hydrocarbon production terminal installation which includes a transfer structure with a portion that lies substantially at the sea surface and is anchored to the sea floor and connected to a floating storage vessel, and a fluid conduit which extends from the sea floor through the transfer structure to the vessel, to carry high pressure fluid from an oil well at the sea floor to the vessel, and wherein the vessel and a portion of the transfer structure must be allowed to rotate without limit about a vertical axis, the improvement wherein:
said transfer structure includes a nonrotatable frame anchored to the sea floor so it cannot rotate without limit about a vertical axis, and a rotatable frame which can rotate without limit about a vertical axis and which is connected to the vessel;
said fluid conduit includes a fluid swivel having a nonrotatable swivel portion substantially fixed to said nonrotatable frame and a rotatable swivel portion, and said fluid conduit also includes a rotating conduit portion connecting the rotatable swivel portion to the vessel; and
said fluid conduit also includes a riser conduit portion extending from substantially the sea floor to said transfer structure, and a pressure reducing means mounted on said nonrotatable frame and connected between said riser conduit portion and said nonrotatable fluid swivel portion, for reducing the pressure of fluid that is delivered to the

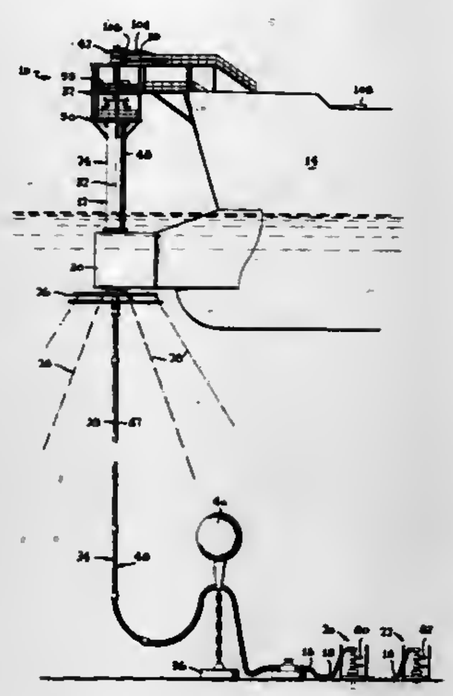

fluid swivel, to enable a moderate pressure fluid swivel to be used to carry initially high pressure fluid from the sea floor to the vessel;
said nonrotatable frame being positioned close enough to said vessel so a seaman stationed on said vessel can walk from said vessel to said frame to service said pressure reducing means and can then walk directly back to said vessel.

4,299,261
OFFSHORE LOADING SYSTEM
Larry J. Talafuse, Spring, Tex., assignor to FMC Corporation, San Jose, Calif.
Filed Oct. 17, 1979, Ser. No. 85,669
Claims priority, application United Kingdom, Dec. 11, 1978, 47994/78
Int. Cl.^{3} B67D *5/70;* **B65B** *3/04*
U.S. Cl. 141—387 **14 Claims**

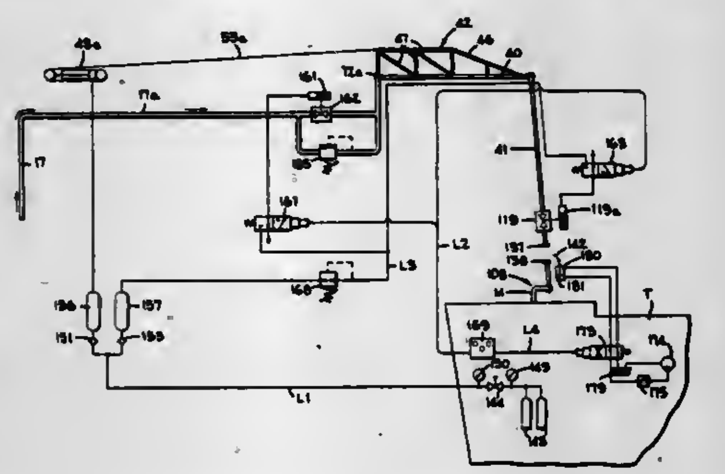

6. An offshore loading system for transferring fluid from an articulated column to a marine tanker manifold, for providing for relative movement between said tanker and said column, and for controlling the operation of said system from said marine tanker, said system comprising:
an inboard conduit member;

means for pivotally connecting an inboard end of said inboard conduit member to said articulated column for pivotal movement about a first horizontal axis;
an outboard conduit member;
means for pivotally connecting an inboard end of said outboard conduit member to an outboard end of said inboard conduit member for pivotal movement of said outboard member about a second and a third generally horizontal axis;
a fluid control valve;
a swivel joint connected between said fluid control valve and an outboard end of said outboard conduit member;
power supply means mounted on said marine tanker;
means for coupling power from said power supply means on said tanker to said control valve to control operation of said valve; and
universal joint means connected between said fluid control valve and said tanker manifold.

4,299,262
CONDUIT BYPASS OF ARTICULATED JOINT, SUCH AS AT THE BASE OF AN OFFSHORE COLUMN
John S. Andrepont, Downers Grove, Ill., assignor to Chicago Bridge & Iron Company, Oak Brook, Ill.
Filed Apr. 21, 1980, Ser. No. 142,390
Int. Cl.^{3} B63B *21/50*
U.S. Cl. 141—387 **7 Claims**

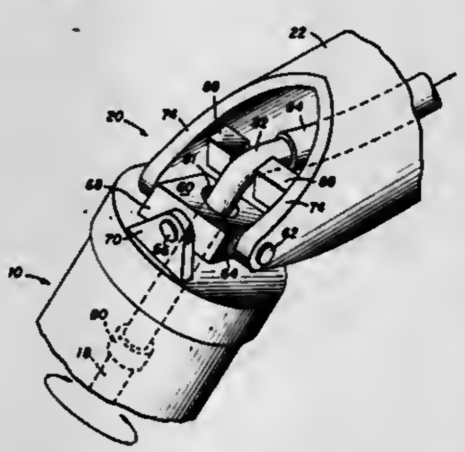

1. Apparatus comprising:
a first body and a second body joined together by an articulated joint;
the articulated joint including first and second pivot means perpendicular to each other;
a conduit extending through the first pivot means and through at least part of the first body;
a portion of the conduit projecting lateral to the second pivot means and between two spaced-apart guides supported by the second body or the articulated joint whereby the second body can pivot on the second pivot means with the conduit laterally projecting portion arranged between the guides, and rotation of the second body causes the guides to apply torque to the conduit laterally projecting portion; and
said conduit extending from the conduit laterally projecting portion into supporting arrangement on the second body.

4,299,263
MECHANICAL ROUTER GUIDE
Charles D. Skinner, 5237 Nanette St., Bonita, Calif. 92002
Filed Aug. 3, 1979, Ser. No. 63,398
Int. Cl.^{3} B27C *5/10*
U.S. Cl. 144—144.5 R **5 Claims**

1. An apparatus for positioning and guiding a hand-held tool about a workpiece which comprises:
a flat guiding template supporting said tool; and
means for placing the supporting surface of said template in a slanted position in relation to the face of the workpiece to be worked upon said means for placing comprising:
a frame holding said template;
a substructure stationarily positioned in relation to the workpiece and

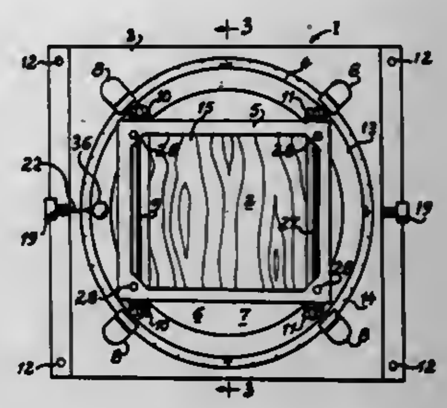

means for pivotally connecting the frame to the substructure around a first axis parallel to said face of the workpiece.

4,299,264
TIRES
Arthur R. Williams, Birmingham, England, assignor to Dunlop Limited, London, England
Filed Apr. 8, 1980, Ser. No. 138,350
Claims priority, application United Kingdom, Apr. 12, 1979, 13141/79
Int. Cl.^{3} B60C *11/00*
U.S. Cl. 152—209 R **35 Claims**

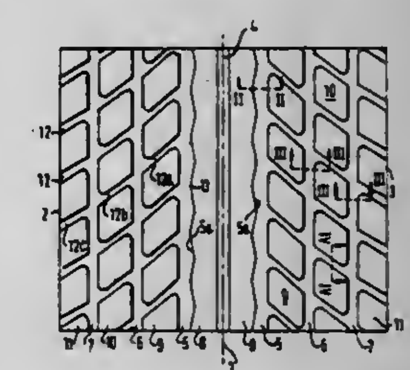

1. A unidirectional tread for a road vehicle tire having a pattern with an overall "land to sea ratio" (as defined herein) between 65% to 35% and 75% to 25% and comprising at each side of the centreline of the tread a plurality of circumferentially spaced apart lateral grooves, every lateral groove extending outwardly at an angle between 30° and 70° to the centreline and the axially inward end of every lateral groove being behind the remainder of the groove in the contact patch so that in use of the tire on a road vehicle when the vehicle is moving forwards the axially inner end of a groove enters the contact patch between road and tire first, the remainder of the groove entering progressively afterwards.

4,299,265
RESTRAINING WHEEL MEANS
Bernard D. Alm, Willowdale, Canada, assignor to FMC Corporation, San Jose, Calif.
Continuation of Ser. No. 871,891, Jan. 23, 1978, abandoned. This application Mar. 31, 1980, Ser. No. 135,232
Claims priority, application Canada, Dec. 6, 1977, 292501
Int. Cl.^{3} B60C *25/12*
U.S. Cl. 157—1.1 **4 Claims**

1. Wheel restraining means for use in restraining a tire wheel rim on a generally vertical shaft of a machine for working on a tire, said shaft being substantially immovable in a vertical direction, comprising rigid member means having an opening therein embracing said shaft, a flexible member extending

below the underside of said rigid member, said flexible member comprising an inflatable, annular air bag having a lower surface engagable with an adjacent surface of a tire wheel, and an

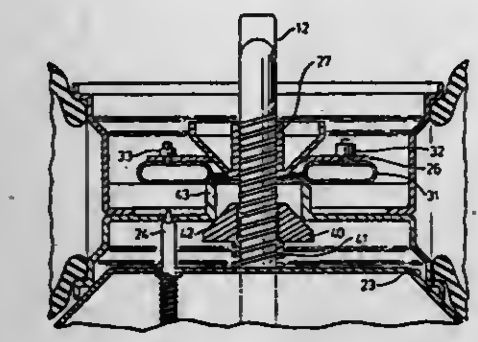

adjustable locking means on said shaft engagable with said rigid member to urge said flexible member into vertical pressure engagement with said wheel to substantially restrain movement of said wheel at least in a vertical direction.

4,299,266

METHOD FOR INCREASING THE WIDTH OF A CAST PIECE

Moriki Hashio, and Tomohiko Kimura, both of Ibaragi, Japan, assignors to Sumitomo Kinzoku Kogyo Kabushiki Kaisha, Osaka, Japan

Filed Jan. 4, 1979, Ser. No. 931

Int. Cl.³ B22D ***11/04***

U.S. Cl. 164—491 **9 Claims**

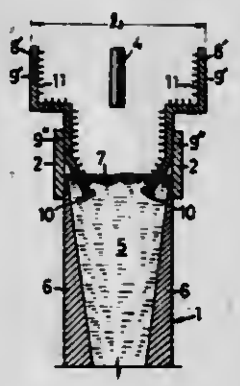

1. A method of increasing the width of cast piece formed in a continuous metal casting operation using a casting mold comprising two longitudinal walls which are parallel to each other and are spaced apart from each other and two transverse walls which are parallel to each other and are disposed between said longitudinal walls and are relatively movable between said longitudinal walls, the method comprising;

stopping the pouring of molten metal into said mold;

stopping the withdrawal of the cast piece from said mold;

inserting into said mold from above a frame including a pair of opposite side plate members each of which (a) consists of an upper portion and a lower portion, said upper portion being disposed substantially vertically and extending substantially parallel to the upper portion of the other plate member and having an outer surface which is spaced from the outer surface of the other side plate member by a distance equal to the desired increased width of the cast piece, and said lower portion having an outer surface which is spaced from the outer surface of the lower portion of the other side plate member by a distance not greater than the existing width of the cast piece, (b) has two opposite edges which are spaced apart by a distance substantially equal to the distance between said longitudinal walls, and (c) has a lower end formed with an anchor for dipping in the cast piece and spaced from the anchor of the other side plate member by a distance less than the existing width of the cast piece, so that the upper portions of plate members extend substantially perpendicular to the longitudinal walls and the edges of the lower portions fit tightly against the longitudinal walls respectively;

dipping the anchors at the lower ends of the plate members into the molten metal in the mold;

resuming the pouring of molten metal into the cavity bounded by said longitudinal walls and said side plate members;

moving the transverse walls away from each other until the distance between the outer surfaces of the upper portions is equal to the desired increased width of the cast piece;

resuming the withdrawal of the existing cast piece together with said frame and bringing the outer surfaces of the upper portions of the side plate members into contact with the transverse walls respectively; and

forming a cast piece which is continuous with the cast piece between said side plate members and which has desired increased width.

4,299,267

COOLING JACKET FOR AN INGOT MOLD FOR THE CONTINUOUS CASTING OF METAL AND AN INGOT MOLD PROVIDED WITH THE COOLING JACKET

Jean-Pierre Birat, Semecourt, and Louis Vedda, Metz, both of France, assignors to Institut de Recherches de la Siderurgie Francaise, Saint-Germain-en-Laye, France

Filed Apr. 16, 1979, Ser. No. 29,914

Claims priority, application France, Apr. 17, 1978, 78 11285

Int. Cl.³ B22D ***27/02, 11/10***

U.S. Cl. 164—502 **12 Claims**

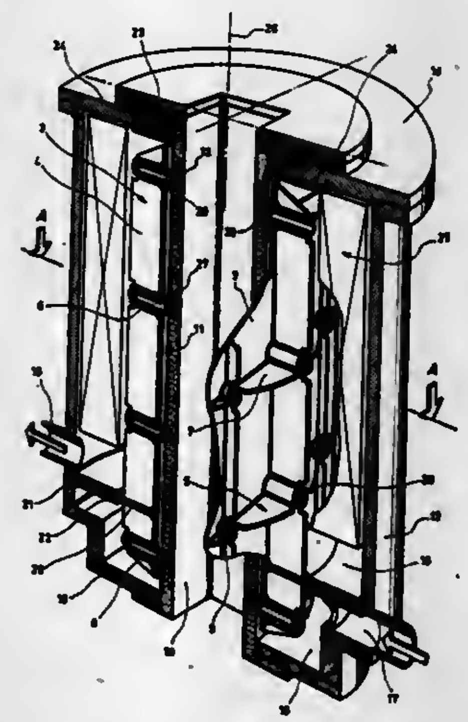

1. In a substantially vertically extending ingot mold for the continuous casting of metal, especially steel, a combination comprising an inner tube having opposite open ends for the passage of the metal to be cast, said tube defining an internal mold surface and having an opposed outer surface; a cooling jacket surrounding said inner tube radially spaced therefrom, said cooling jacket comprising a tubular element uniformly spaced from the outer surface of the inner tube and a grid of stiffening ribs projecting from an outer surface of the tubular element, said grid being provided at intersections of said stiffening ribs with bores extending therethrough and also through said tubular element; fastening means extending through said bores for fastening the inner tube to said cooling jacket, an outer shell surrounding said cooling jacket with considerable clearance coaxially therewith; a cover closing the upper end of the outer shell; a bottom plate closing the lower end of the outer shell, said cover and said bottom plate being formed with openings therethrough aligned with said opposite open ends of said inner tube, said inner tube extending between said cover and said bottom plate and being fastened thereto; and a polyphase inductor surrounding said cooling jacket inside said outer shell.

4,299,268

AUTOMATICALLY CONTROLLED CASTING PLANT

Gerard A. Lavanchy, Prilly-Lausanne; Fritz Mezger, Munteller, and Marc-Henri Rossler, Epalinges, all of Switzerland, assignors to Maschinenfabrik & Eisengiesserei Ed. Mezger AG, Kallnach, Switzerland

Filed May 13, 1980, Ser. No. 149,459

Claims priority, application Switzerland, Jun. 7, 1979, 5330/79

Int. Cl.³ B22D ***37/00***

U.S. Cl. 164—155 **6 Claims**

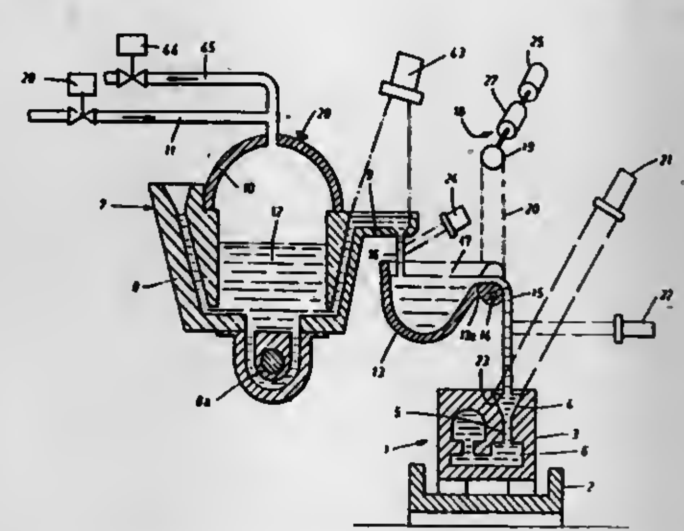

1. A casting plant of the type equipped with automatic control means including a pouring ladle adapted to contain molten metal, intermediate means for receiving a feeding stream from said pouring ladle, said intermediate means being capable of containing a variable quantity of molten metal, and a casting line formed of closed molds movable successively into a filling position, each of said molds having a pouring gate for receiving a filling stream from said intermediate means when in said filling position, wherein said control means comprises a first control means for activating said intermediate means, thus acting upon the flow rate of said filling stream and upon said variable quantity of molten metal, a second control means for activating said pouring ladle, thus acting upon the flow rate of said feeding stream, first detecting means for continuously monitoring and indicating the height of the level of metal in said pouring gate during filling, second detecting means for continuously monitoring and indicating the quantity of metal in said intermediate means, said second detecting means being integral with said first control means, and a regulating circuit means including, among other possible items, only two servo loop, said first loop comprising said first detecting means and said first control means and being arranged for controlling the flow of said filling stream to maintain said level of metal at a constant height, and said second loop comprising said second detecting means and said second control means and being arranged for controlling the flow of said feeding stream to maintain said quantity of metal within narrow limits.

4,299,269

HANDLING SYSTEM FOR FOUNDRY SAND MOLDS

Wilmer J. Friesen, and Frank A. Hulet, both of Hutchinson, Kans., assignors to Grede Foundries, Inc., Milwaukee, Wis.

Filed May 20, 1976, Ser. No. 688,140

Int. Cl.³ B22D ***33/00***

U.S. Cl. 164—324 **8 Claims**

1. In a conveyor system for foundry sand molds; a curvilinear track means defining a closed path having a mold loading station, a metal casting station and a mold unloading station; a plurality of mold carriers supported for movement along the track means; each of said mold carriers being adapted to carry a plurality of sand molds arranged in a line thereon generally normal to the path of travel along the track means with the mold position at one end of the line being the loading position and the mold position at the opposite end of the line being the unloading position; drive means for effecting intermittent movement of the mold carriers between indexed positions along the track means; means at the mold loading station for loading a sand mold onto the loading position of the respective mold carriers; a mold jacket provided on each mold carrier to embrace and support the newly added sand mold during the metal casting procedure; lever means pivotally carried by each mold carrier on an axis generally paralleling the track means and in turn pivotally carrying the mold jacket adjacent to one end thereof; a first guide rail mounted on the track means; a follower carried adjacent to the opposite end of the lever means from the mold jacket and being engageable on the first guide rail to effect a pivoting of the lever means to thereby lower the mold jackets to embrace the corresponding said

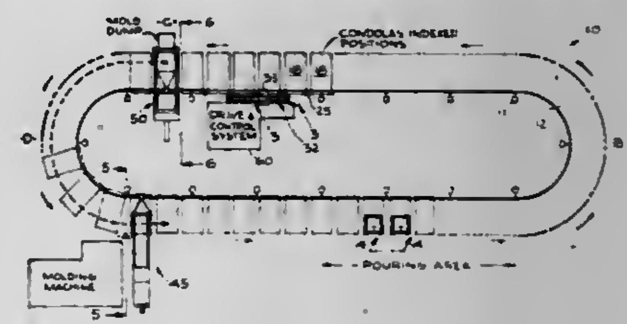

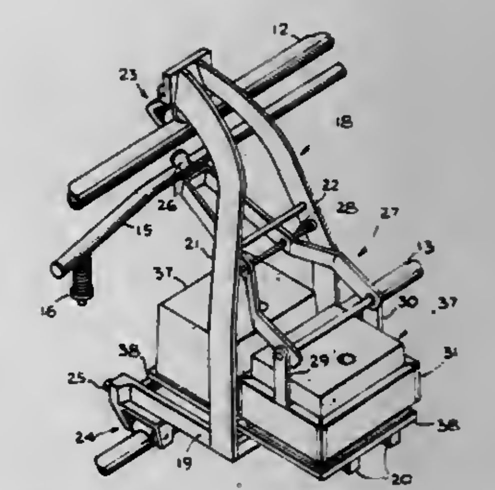

molds in the loading position prior to the respective mold carriers reaching the metal casting station; a second guide rail mounted on the track means; said follower on the lever means being engageable under the second guide rail to pivot the lever means and thereby lift the respective mold jackets from the sand molds to a position spaced above the sand molds prior to the respective mold carriers reaching the mold unloading station; and means at the mold unloading station for removing the sand mold in the unloading position from the respective mold carriers and moving the balance of the sand molds on the carriers toward the unloading position for further cooling of the cast metal in the latter molds during additional travel along the track means prior to their unloading and to vacate the loading position on the mold carriers in readiness for the reception of another sand mold.

4,299,270

EARTH ENERGY SINK

William H. McGrath, 14 Winter St., Lexington, Mass. 02109

Filed Mar. 19, 1979, Ser. No. 21,455

Int. Cl.³ C03B ***23/08;*** **F24J** ***3/02***

U.S. Cl. 165—45 **4 Claims**

1. In combination, a building structure having a heating and air conditioning system, an upper water-permeable layer spaced in the ground immediately below the structure and including a bed of stones over which water is flowed and conduit means for collecting and returning the water to said heating and air conditioning system, a heat storage region extending substantially along the perimeter of the structure

and insulated from the ground so as to form a thermal flywheel region, a water barrier separating said thermal flywheel region from said upper water-permeable layer, and a deep sink source

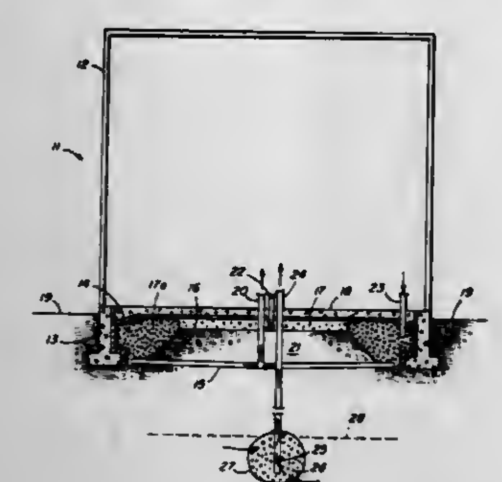

spaced within the ground water table in the ground below said structure; pump and valve means being provided to selectively circulate water between said heating and air conditioning system and said flywheel region.

4,299,271
STORAGE OF RADIOACTIVE LIQUIDS
Alfred L. Mills, Thurso, Scotland; John Reekie, Culcheth, and John A. Williams, Appleton, both of England, assignors to United Kingdom Atomic Energy Authority, London, England
Filed Sep. 25, 1979, Ser. No. 78,790
Claims priority, application United Kingdom, Nov. 7, 1978, 43505/78
Int. Cl.³ G21F *9/22*
U.S. Cl. 165—47 **4 Claims**

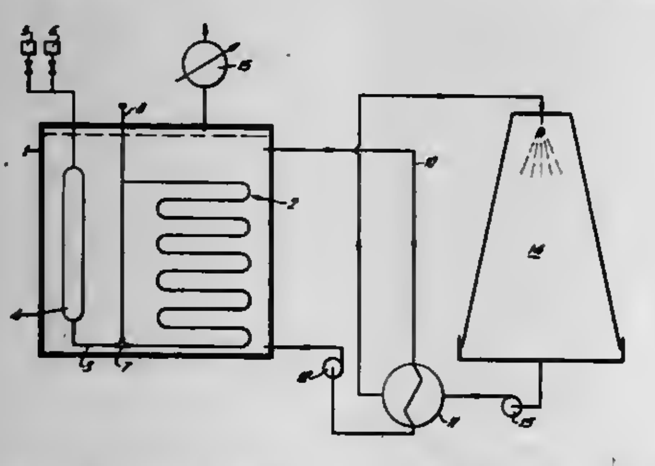

1. A storage installation for liquid radioactive material comprising:
a tank for a liquid coolant;
at least one pipe circuit containing liquid radioactive material immersed in the coolant;
pulsed fluidic pump means in the pipe circuit for circulating the radioactive material around the pipe circuit to minimize the accumulation of sediment therein; and
means for circulating the liquid coolant around the pipe circuit.

4,299,272
INDUSTRIAL HEAT PIPE ENERGY RECOVERY PACKAGE UNIT
Anthony C. Del Bagno, Sr., Newton, N.J., assignor to James Howden America, Inc., East Hartford, Conn.
Filed May 17, 1979, Ser. No. 39,703
Int. Cl.³ A23C *3/02*
U.S. Cl. 165—66 **1 Claim**

1. A heat exchange recovery apparatus for an industrial process comprising
a main air supply conduit
a by-pass supply conduit
a main exhaust conduit
a by-pass exhaust conduit
a plurality of independant heat exchange tubes forming a heat exchange zone suspended between and extending into said main supply and main exhaust conduits wherein, said plurality of heat exchange tubes are removeably secured in brackets disposed in said main supply and main exhaust conduits, and said heat exchange tubes have integral, continuous, tapered, fin elements formed thereon wherein, said brackets have a plurality of heat exchange tube receiving spaced recesses extending along at least one edge, and
the brackets in their assembled relationship form circular apertures which secure the heat exchange tubes in place

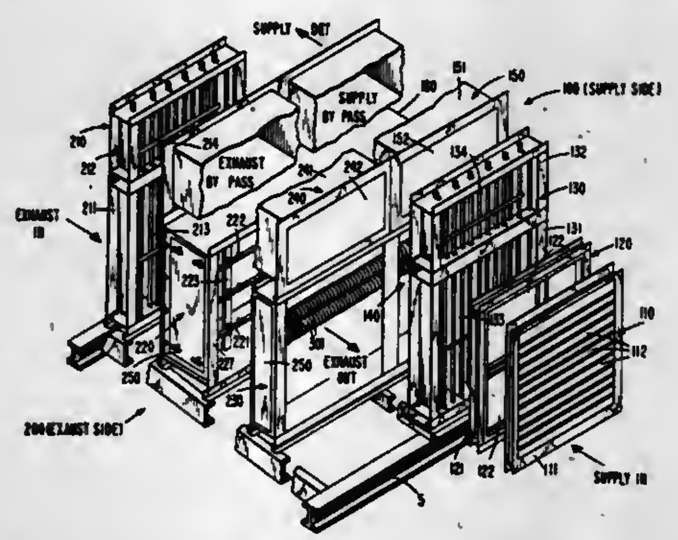

and accommodate the integral fin elements formed thereon
a plurality of spray nozzles disposed in said exhaust conduit upstream of said heat exchange tubes, wherein said spray nozzels are periodically actuated to wash away contaminants which have accummulated on said heat exchange tube and fin surfaces
a louver assembly and filter assembly mounted upstream of said damper assembly in said main supply conduit, and said damper assemblies can be actuated; to maintain a given temperature value in the main exhaust conduit; to vary the efficiency of the heat exchange recovery apparatus and to direct all of the supply air and exhaust through the by-pass conduits to allow repair replacement or rearrangement of the heat exhaust tubes without disrupting the industrial process.

4,299,273
HEAT EXCHANGER, ESPECIALLY RECUPERATOR FOR HIGH TEMPERATURE REACTORS
Heinz Fischli, Effretikon, Switzerland, assignor to Sulzer Brothers Ltd., Winterthur, Switzerland
Filed Sep. 8, 1978, Ser. No. 940,779
Claims priority, application Switzerland, Sep. 14, 1977, 11217/77
Int. Cl.³ F28F *1/36*
U.S. Cl. 165—78 **10 Claims**

1. A heat exchanger, especially a recuperator for high temperature reactors, comprising:
a substantially prismatic jacket having a primary direction of extent;
a multiplicity of elongated hexagonal elements arranged within the jacket and essentially parallel to the primary direction of extent thereof;
each hexagonal element having a central tube and means defining heat transfer surfaces arranged about each central tube;
said means defining said heat transfer surfaces having opposed ends and extending axially about the central tube and up to the region of the outer contour of the related hexagonal element;
respective collectors seated upon opposite ends of said central tube and connected with respective opposed ends of said means defining the heat transfer surfaces;
spacer means spatially fixedly arranged at the region of the jacket;
spacer means for connecting each hexagonal element with its neighboring hexagonal elements and with said spacer means spatially fixedly arranged at the region of the jacket laterally bounding the heat exchanger;
said spacer means being structured so as to have play such that the spacing between the hexagonal elements and between the hexagonal elements and the spatially fixedly arranged spacer means can alter by the amount of such play;

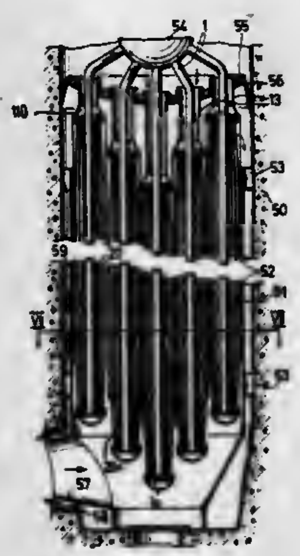

said play being sized such that the sum of the play in any one predetermined respective direction over the cross-section of the heat exchanger takes-up without constraint the greatest differential expansion between the hexagonal elements and the spatially fixedly arranged spacer means in such direction under extreme operating conditions of the heat exchanger;
each hexagonal element having edges formed by six mutually reinforced longitudinal rails; and
said spacer means of said hexagonal elements comprising at least three of said longitudinal rails having dovetail joints which engage, in the assembled condition of the heat exchanger, with play with one another and with dovetail joints provided at the spatially fixedly arranged spacer means.

4,299,274
THERMAL ENERGY STORAGE DEVICE AND METHOD FOR MAKING THE SAME
Steve Campbell, Manchester, Mo., assignor to Pipe Systems, Incorporated, Fenton, Mo.
Continuation-in-part of Ser. No. 35,020, May 1, 1979, abandoned. This application Sep. 17, 1979, Ser. No. 76,395
Int. Cl.³ F28D *21/00*
U.S. Cl. 165—104.17 **11 Claims**

1. A thermal energy storage device comprising an elongated rigid tube-like container having an interior opening partially filled with a phase change material, said container being sealed at opposed ends and constructed of a high density polyethyl-

ene having a molecular weight of about 500,000 to 700,000, at least one of said ends being fusion sealed by a pinch seal.

4,299,275
HEAT TRANSFER SYSTEM
Glen P. Robinson, Jr., 1050 Mt. Paran Rd., NW., Atlanta, Ga. 30327
Continuation of Ser. No. 882,654, Mar. 2, 1978, which is a division of Ser. No. 615,343, Sep. 22, 1975, Pat. No. 4,119,143.
This application May 8, 1980, Ser. No. 147,984
Int. Cl.³ F28D *21/00*
U.S. Cl. 165—104.14 **1 Claim**

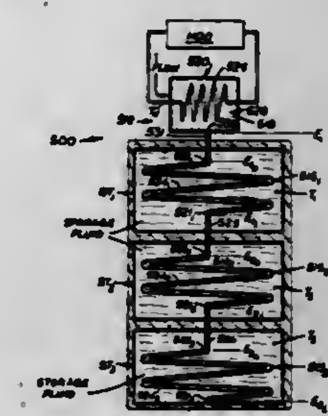

1. A heat transfer system comprising:
first heat storage means capable of storing heat;
second heat storage means capable of storing heat and thermally isolated from said first heat storage means, the temperature of said first heat storage means being at least as great as the temperature of said second heat storage means;
heat sink means having an operating fluid to be heated;
recovery heat transfer link means operatively connecting said first and second heat storage means to said heat sink means to selectively transfer heat from said first and second heat storage means to said heat sink means, said recovery heat transfer link means comprising:
a recovery working fluid having a prescribed vaporizing temperature and pressure range;
a first input heat exchanger carrying recovery working fluid therein and placing the recovery working fluid therein in a heat exchange relationship with said first heat storage means;
a second input heat exchanger carrying recovery working fluid therein and placing the recovery working fluid therein in a heat exchange relationship with said second heat storage means said first input heat exchanger located at an elevation higher than said second input heat exchanger and the highest point on said second input heat exchanger communicating with the lowest point on said first input heat exchanger;
an output heat exchanger located at an elevation higher than the elevation of said first input heat exchanger and the lowest point on said output heat exchanger communicating with the highest point on said first input heat ex-

changer for receiving vaporized recovery working fluid from said first and second input heat exchangers and placing the vaporized recovery working fluid in a heat exchange relationship with the operating fluid of said heat sink means, said input and output heat exchangers constructed and arranged so that condensed recovery working fluid can only flow from said output heat exchanger to said input heat exchangers to permit heat transfer through said recovery working fluid only from said heat storage means to said operating fluid in said heat sink means so that as long as the temperature of said first heat storage means is higher than the temperature of said second heat storage means; heat will only be transferred from said first heat storage means to the operating fluid in said heat sink means by vaporizing and condensing the recovery working fluid and so that, when the temperature of said first heat storage means becomes substantially equal to the temperature of said second heat storage means, heat will be transferred from both said first and second heat storage means to the operating fluid in said heat sink means by vaporizing and condensing the recovery working fluid until the temperature of the operating fluid becomes substantially equal to the temperature of said first and second heat storage means.

4,299,276
HEAT EXCHANGER HAVING RADIAL SUPPORT
William M. Small, Bartlesville, Ohio, assignor to Phillips Petroleum Company, Bartlesville, Okla.
Filed Apr. 21, 1980, Ser. No. 142,186
Int. Cl.³ F28F *9/00*
U.S. Cl. 165—162 **13 Claims**

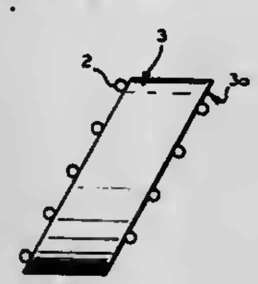

1. A heat exchanger comprising
(a) a bundle of mutually parallel tube sections of essentially identical cross section,
(b) at least one set of rod baffles comprising at least a first and a second rod baffle, each rod baffle comprising a plurality of mutually parallel rods, the rods of the first rod baffle and the rods of the second rod baffle being arranged at a substantial angle to each other, each rod of the first rod baffle being arranged between adjacent rows of tube sections of a first series of rows and each rod of the second rod baffle being arranged between adjacent rows of tube sections of a secod series of rows the first series of rows being arranged at a substantial angle with respect to the second series of rows, and having at least one tube section row arranged between each pair of adjacent parallel rods, said set of rod baffles providing radial support for the tube sections,
(c) at least one section of a support cylinder surrounding said tube section bundle and having a first plane face and a second plane face, the rod end portions of the rods of one rod baffle being rigidly connected to said first face and the rod end portions of the rods of another rod baffle being rigidly connected to said second face, thus providing a unit of two rod baffles rigidly connected, at least one of the faces being arranged at an angle between 20° and 70° with respect to the axis of the tube sections.

4,299,277
HEATING AND COOLING SYSTEM EMPLOYING REMOTE BURIED STORAGE AREAS
James M. McGregor, Lake Dallas, Tex., assignor to Climate Cycling Corporation, Fort Worth, Tex.
Filed Jul. 19, 1979, Ser. No. 58,800
Int. Cl.³ F25B *29/00;* **F28D** *13/00*
U.S. Cl. 165—48 S **9 Claims**

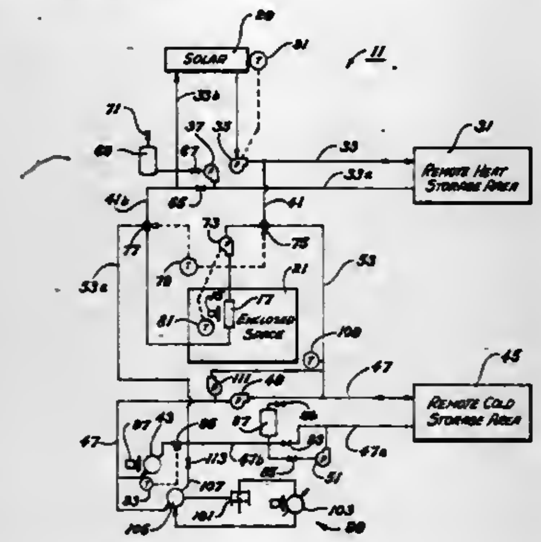

1. In a system for conditioning air being circulated in an enclosed space, including:
a. an air distribution system;
b. an air circulation means for circulating the air through the air distribution system; said air circulation means being connected with said air circulation system; and
c. a first air heat exchanger for exchanging heat with said air; said first air heat exchanger being disposed in said air distribution system;
the improvement for heat exchanging with ambient sources and comprising:
d. a second heating heat exchanger for extracting heat from an ambient heat source:
e. an elongate remote heat storage area buried beneath the earth's surface and employing the earth as the storage medium;
f. a heating fluid circuit for flowing a heating fluid through said second heat exchanger and said elongate remote heat storage area; said heating fluid circuit being connected with said second heat exchanger and said remote heat storage area with an inlet connection and an outlet connection; said outlet connection being spaced from said inlet connection such that reverse flow will extract stored heat from said remote heat storage area;
g. heating fluid in said heating fluid circuit;
h. first heating pump means for and connected into said heating fluid circuit so as to circulate said heating fluid through said heating fluid circuit, through said second heat exchanger and through said remote heat storage area in a first direction for storing heat in said heat storage area;
i. second heating pump means for and connected into said heating fluid circuit so as to circulate said heating fluid through said heating fluid circuit and said heat storage area in a second direction opposite said first direction for removing heat from said heat storage area;
j. air heating circuit means for and connected so as to flow said heating fluid through said first air heat exchanger in heat exchange relationship with said air for heating said air;
k. a third cooling heat exchanger for venting heat to an ambient source for cooling a cooling fluid;
l. an elongate remote cold storage area buried beneath the earth's surface and employing the earth as the storage medium;
m. a cooling fluid circuit for flowing a cooling fluid through said third cooling heat exchanger and said cold storage area; said cooling fluid circuit being connected with said

third heat exchanger and with said cold storage area with an inlet connection and an outlet connection; said outlet connection being spaced from said inlet connection such that reverse flow will deposit heat and effectively extract cooling capability from said remote cold storage area;
n. cooling fluid in said cooling fluid circuit;
o. third cooling pump means for and connected into said cooling fluid circuit so as to circulate said cooling fluid through said remote cold storage area in a first direction for storing cooling capacity by removing heat from said cold storage area;
p. fourth cooling pump means for and connected into said cooling fluid circuit so as to circulate said cooling fluid through said cooling fluid circuit and said cold storage area in a second direction opposite said first direction for giving up heat to said cold storage area after heat is removed from said air;
q. air cooling circuit means for and connected so as to flow said cooling fluid through said first air heat exchanger in heat exchange relationship with said air for cooling said air when operating in the cooling mode.

4,299,278
CONTROL SYSTEM FOR WELL HEATING BY STEAM
Vernon D. Beehler, 1485 Dwight Dr., Glendale, Calif. 91207
Filed Jun. 20, 1980, Ser. No. 161,586
Int. Cl.³ E21B *34/16, 36/00, 43/24*
U.S. Cl. 166—53 **11 Claims**

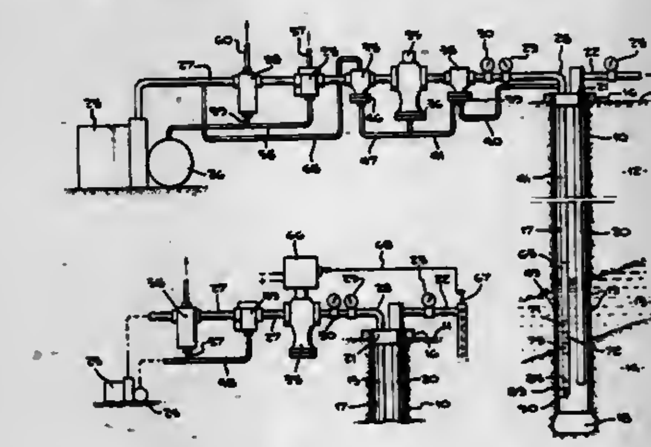

1. In a bottom hole steam heater for wells having a production line for carrying production fluid from the well head wherein the heater comprises a steam conducting pipe extending from the top of the well through producing strata and a constantly open restricted orifice adjacent the bottom of the pipe for discharge of condensate,
a control system for delivery of steam at a selected pressure at the upper end of the steam conducting pipe from a source of steam under pressure higher than said selected pressure,
said system comprising
a main steam delivery line from said source to the steam conducting pipe at the top thereof,
a main steam valve in said delivery line,
said main steam valve having a pressure responsive control,
a pressure regulator in the delivery line downstream of the main steam valve,
a steam pressure sensing line of capacity substantially less than the delivery line connected between the pressure regulator and the delivery line at a location adjacent the top of the well,
a pressure control line of capacity substantially less than said delivery line connected between the pressure regulator and said pressure responsive control,
and a back pressure regulator in the delivery line upstream of the main valve.

9. In a bottom hole steam heater for wells having a production line for carrying fluid from the well and wherein the heater comprises a steam conducting pipe having a heat exchanging portion extending from the top of the well through producing strata and a constantly open restricted orifice adjacent the bottom of the heat exchanging portion for discharge of condensate,
a control system for delivery of steam at a selected pressure at the upper end of the steam conducting pipe from a source of steam under pressure higher than said selected pressure whereby to maintain fluid in the well at a selected temperature,
said control system comprising,
a main steam delivery line from said source to the steam conducting pipe at the top thereof,
a main steam valve in said delivery line,
said main steam valve having an electrically responsive control,
a heat responsive electrically actuated sensor in said production line at a location adjacent the top of the well,
and an electrical connection between said sensor and said electrically responsive control whereby to continuously transmit temperature conditions to said electrically responsive control,
said main steam valve being responsive to said control for delivering steam at a selected pressure to the steam conducting pipe.

4,299,279
APPARATUS FOR SONICALLY EXTRACTING OIL WELL LINERS
Albert G. Bodine, 7787 Woodley Ave., Van Nuys, Calif. 91406
Division of Ser. No. 893,339, Apr. 4, 1978, Pat. No. 4,236,580.
This application Jan. 31, 1980, Ser. No. 117,048
Int. Cl.³ E21B *31/02*
U.S. Cl. 166—72 **5 Claims**

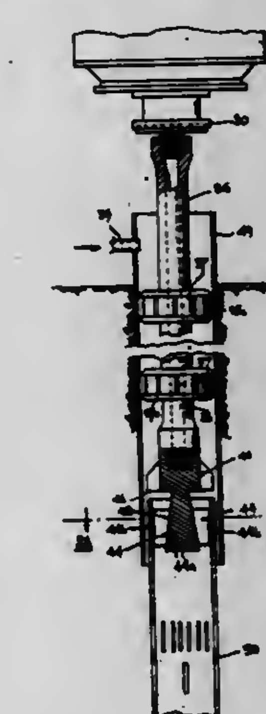

1. Apparatus for removing an oil well liner which extends into and is lodged in a formation at the bottom of an oil well casing comprising:
an elongated elastic column,
means for lowering said column through said casing to bring one end thereof to said liner,
coupling means attached to said column at said one end thereof for removably clamping said column to said liner,
orbiting mass oscillator means,
means for coupling said oscillator means to the other end of said elastic column,
means for rotatably driving said oscillator means at a frequency such as to set up longitudinal resonant elastic vibration of said elastic column with vibrational energy being transferred from said column through said coupling means to said liner,
means including said lowering means for applying varying amounts of vertical bias force through said column to said

liner while the vibrational energy is being transferred thereto, thereby to free said liner from the formation,

means comprising said lowering means for raising said column out of the well casing so as to remove the liner therefrom, and

a plurality of bumper means attached to said column at spaced intervals therealong no greater than one-eighth wavelength of the vibrational pattern set up in said column.

4,299,280
TOOL RETAINING APPARATUS
Cecil B. Greer, 1915 Willis Dr., Longview, Tex. 75601
Filed Apr. 4, 1980, Ser. No. 137,384
Int. Cl.³ E21B *23/04, 41/00*
U.S. Cl. 166—75 R **6 Claims**

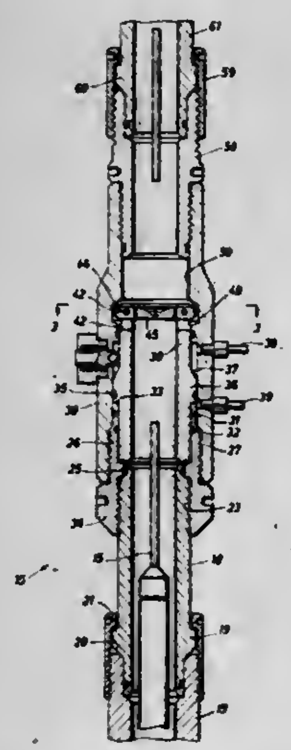

1. For use in selectively capturing a wireline supported tool, an apparatus which comprises:

(a) an elongate hollow tubular housing having an axial passage therethrough, said passage being sized to receive a wireline and wireline supported tool therethrough;

(b) a pair of tab supported gate members;

(c) individual pivot mounting means for each of said gate members to enable said gate members to move to a transverse position jointly wherein said pair of gate members extend transversely across said axial passage through said tubular housing;

(d) shoulder means abutting said gate members in the transverse position to secure said gate members in the transverse position and further preventing rotation of said gate members past said transverse position; and

(e) means for raising and lowering said gate members within said tubular housing immediately adjacent to a cavity on the interior of said tubular housing wherein wall surface means defining said cavity is constructed and arranged to work against the tabs on said gate members to pivot said gate members from said transverse position to a retracted position clearing the axial passage through said tubular housing.

4,299,281
COMPENSATING BRIDGE PLUG
Olen R. Long, Celina, and Ronald F. Langham, Carrollton, both of Tex., assignors to Otis Engineering Corporation, Dallas, Tex.
Filed May 21, 1979, Ser. No. 40,518
Int. Cl.³ E21B *33/129*
U.S. Cl. 166—135 **7 Claims**

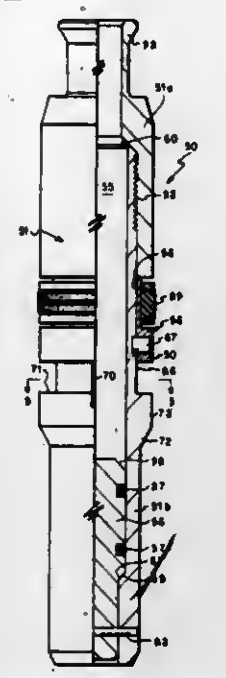

1. A well tool for blocking fluid communication through a tubing string, comprising:

a. a housing with a longitudinal bore therethrough;

b. means, carried on the exterior of the housing, for forming a fluid tight seal between the exterior of the housing and the inside diameter of the tubing string;

c. means for securing the well tool at a desired location within the tubing string;

d. piston means slidably disposed within the longitudinal bore;

e. means for sealing between the longitudinal bore and the piston to block fluid communication through the longitudinal bore;

f. the sealing means maintaining contact between the piston means and the longitudinal bore throughout movement of the piston means relative to the longitudinal bore to block fluid flow through the longitudinal bore; and

g. the sealing means and means, carried on the exterior of the housing, for forming a fluid tight seal cooperating to block fluid communication through the tubing string.

4,299,282
WELL CLEANER
J. W. Thornton, P.O. Box 232, Hartley, Tex. 79044
Filed Mar. 25, 1980, Ser. No. 133,919
Int. Cl.³ B08B *3/02, 9/02;* **E21B** *37/00*
U.S. Cl. 166—177 **12 Claims**

4. An apparatus connected to a hydraulic pressure source and a rotary drive means for cleaning perforations in a well casing, comprising:

body means comprising three arcuately-shaped portions forming a cylinder having its longitudinal axis coaxial with the casing, said arcuately-shaped portions pivotally attached at an upper end thereof to an upper frame member of said body means, each of said portions having two cylindrical rollers rotatably mounted thereon and arranged having its longitudinal axis substantially aligned with the longitudinal axis of the casing; and

actuation means arranged inside said body means and connected to the hydraulic pressure source for moving said pivotally attached arcuately-shaped portions such that the

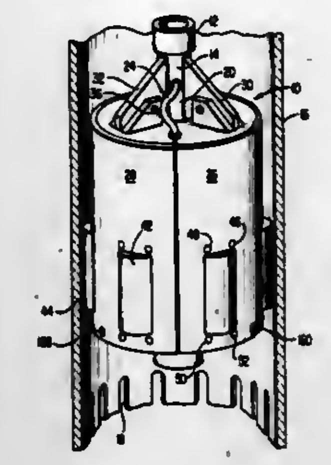

rollers move radially outwardly into contact with the inner surface of the casing.

4,299,283
STRIP STRUCTURE FOR WELL SCREEN
Gregory A. Gryskiewicz, North St. Paul, Minn., assignor to Reese Enterprises, Inc., Rosemount, Minn.
Filed Jun. 26, 1980, Ser. No. 163,198
Int. Cl.³ E21B *43/08*
U.S. Cl. 166—231 **9 Claims**

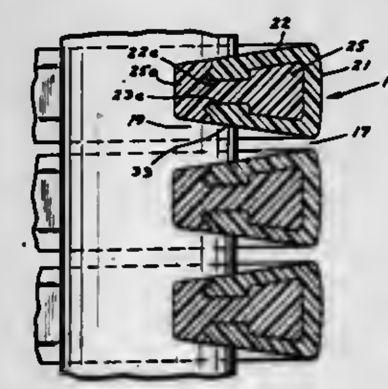

1. An extruded strip member helically wound about axially disposed circumferentially spaced supporting rods and welded thereto to form a substantially cylindrical well screen, said strip member having in combination

the body portion of said strip member being wedge shaped in cross section having its narrower portion inwardly of said well screen and its wider portion outwardly of said well screen,

said wider portion of said strip member being formed of a substantially rigid plastic material,

said narrower portion of said strip member being formed of a plastic material which is relatively free from any cracking effect at the weld points of being secured to supporting rods,

said wider and narrower portions being unitary in structure, and

whereby said narrower portion retains said wider portion in position when said wider portion is in cracked condition.

4,299,284
HIGH SWEEP EFFICIENCY ENHANCED OIL RECOVERY PROCESS
Alfred Brown; Mohan V. Kudchadker, both of Houston; James E. Varnon, Midland, and Lawrence E. Whittington, Katy, all of Tex., assignors to Texaco Inc., White Plains, N.Y.
Filed Dec. 5, 1979, Ser. No. 100,683
Int. Cl.³ E21B *33/138, 43/22, 43/30*
U.S. Cl. 166—245 **25 Claims**

1. In a method of recovering petroleum from a subterranean, petroleum-containing permeable formation, penetrated by at least one injection well and by a plurality of production wells, said formation permeability being different in the direction of at least one of the producing wells from the formation permeability in the direction of at least one other producing well, by an enhanced oil recovery method comprising injecting an oil displacing fluid into the injection well and producing oil and injected fluids from the formation by the producing wells, wherein the improvement for increasing the horizontal sweep efficiency of the oil recovery method comprises:

injecting a predetermined quantity of diverter fluid comprising water having dissolved therein at least one surfactant capable of producing a stable, viscous, oil-in-water emulsion with petroleum present in the flow channels of the portion of the formation adjacent to the production wells, into the production well located along the line of greater formation permeability from the injection well, and injecting a lesser volume into at least one of the wells located along the line of lesser formation permeability prior to the time the oil-displacing fluid reaches the producing well, to form a viscous emulsion in the flow channels of the formation adjacent to said production wells.

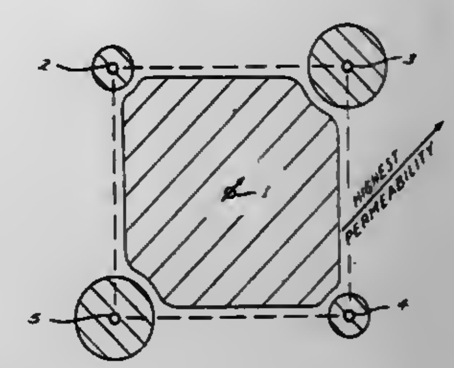

4,299,285
UNDERGROUND GASIFICATION OF BITUMINOUS COAL
Shirley C. Tsai, Pittsburgh; Richard H. Graham, O'Hara Township, Allegheny County, and Robin R. Oder, Export, all of Pa., assignors to Gulf Research & Development Company, Pittsburgh, Pa.
Filed Jul. 21, 1980, Ser. No. 170,707
Int. Cl.³ E21B *43/247;* **E21C** *43/00*
U.S. Cl. 166—259 **9 Claims**

1. In the underground gasification of a swellable bituminous coal by the injection of air into a high gas flow link between an injection hole and a production hole accompanied by the concurrent underground partial combustion and gasification of said coal, a method for producing the high gas flow link and for pretreating and conditioning the coal proximate to said link before said partial combustion and gasification is initiated which comprises the steps (a) injecting fracturing and pretreating air at a pressure sufficient to fracture the coal and at a temperature between about 100° C. and up to about the softening temperature of said coal into said injection hole, whereby a fractured link between the injection and production holes is produced, and (b) continuing the injection of said pretreating air at an elevated pressure and said elevated temperature into said injection hole and through said link to said production hole in the absence of combustion at a flow rate and for such time as will substantially reduce the swelling of said coal proximate to said link, whereby the gas permeability of said coal proximate to said link is enhanced and the plugging of said link in the subsequent partial combustion and gasification step is suppressed.

4,299,286

ENHANCED OIL RECOVERY EMPLOYING BLEND OF CARBON DIOXIDE, INERT GAS AND INTERMEDIATE HYDROCARBONS

Robert B. Alston, Missouri City, Tex., assignor to Texaco Inc., White Plains, N.Y.

Filed May 21, 1980, Ser. No. 152,072

Int. Cl.³ E21B *43/22*

U.S. Cl. 166—274 **15 Claims**

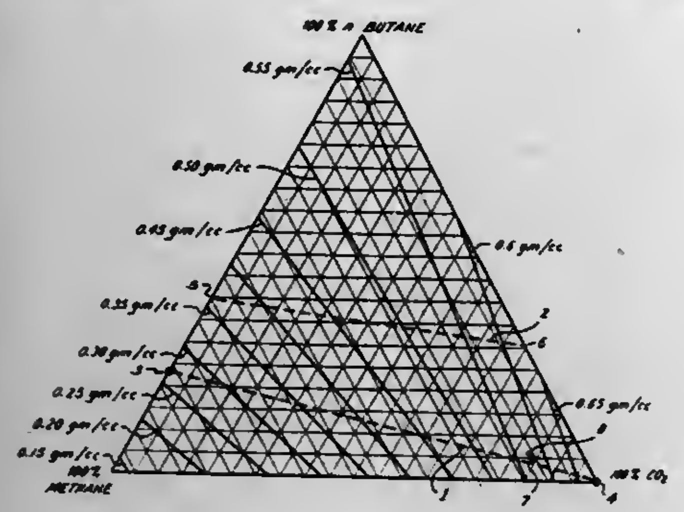

1. A process for recovering petroleum from a subterranean, permeable, petroleum reservoir penetrated by at least one injection well and by at least one production well, comprising the steps of:

a. injecting into the reservoir via said injection well a gaseous displacing fluid comprising a mixture of carbon dioxide, nitrogen, and an intermediate hydrocarbon wherein
 (1) the nitrogen is blended with carbon dioxide in a concentration sufficient to produce a mixture whose density is within a predetermined range, and
 (2) the concentration of intermediate hydrocarbon is at least sufficient to render the gaseous mixture conditionally miscible with the petroleum in the formation at the temperature and pressure of the formation, and

b. injecting a drive fluid to drive the displacing fluid and petroleum through the formation, and

c. recovering petroleum displaced by the displacing fluid from the formation via the producing well.

4,299,287

BAR ACTUATED VENT ASSEMBLY AND PERFORATING GUN

Roy R. Vann; George W. Ribble, and Flint R. George, all of Houston, Tex., assignors to Geo Vann, Inc., Houston, Tex.

Filed May 19, 1980, Ser. No. 151,148

Int. Cl.³ E21B *33/14, 43/116, 43/26*

U.S. Cl. 166—297 **11 Claims**

1. In a cased wellbore having a perforating gun suspended adjacent to a hydrocarbon containing formation by a tubing string, the gun having a firing head actuated by impact, a packer which divides the casing annulus into an upper and a lower annulus, and a vent assembly underlying the packer and connected in series relationship within the tubing string, the improvement comprising:

said vent assembly includes a main body having an axial passageway formed therethrough, a port formed into said main body which communicates the lower annulus with the tubing interior, a sleeve slidably received within said axial passageway and closing said port against flow;

a bar having a longitudinally disposed body which can be received in axially aligned relationship within the tubing string, a leading end of the bar being of a configuration to impact against the gun firing head, means on said bar for engaging and moving said sleeve in a downhole direction to an open port position;

so that the bar can be dropped down through the tubing string, whereupon the bar engages and moves the sleeve to the opened position, and continues to travel downhole where the bar impacts against the gun firing head to detonate the shaped charges of the gun and perforate the casing, whereupon flow immediately commences from the hydrocarbon containing formation, and flows through the perforations, up the lower annulus, and into the port of the vent assembly, up the tubing string, and to the wellhead, where the produced hydrocarbons can be gathered.

9. A method of completing a hydrocarbon containing formation located downhole in a cased borehole, comprising:

running a casing gun downhole into proximity of the formation, providing the gun with a firing head responsive to impact;

dividing the casing annulus into a lower and upper annulus by a packer device;

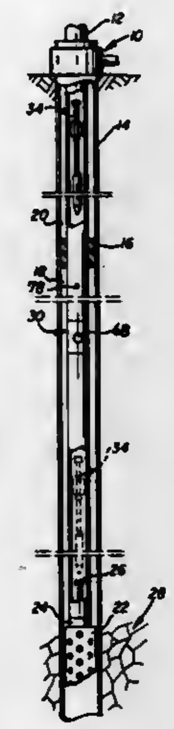

positioning a vent assembly in series relationship respective to the tubing string, and locating the vent assembly below said packer device;

forming a port through the vent assembly; and, closing the port with a sliding sleeve assembly;

dropping a traveling bar down the tubing string and using the momentum of the bar for moving the sliding sleeve downhole to open the port, and subsequently using the momentum of the traveling bar for detonating the firing head, so that the casing gun perforates the casing produced fluid flows from the hydrocarbon containing formation, into the lower casing annulus, uphole into the opened port of the vent assembly, into the tubing string, up the tubing string to the surface of the ground, thereby completing the wellbore.

4,299,288

DURABLE LIGHTWEIGHT HORSESHOE AND ACCESSORIES

Robert L. Peacock, 6930 Blue Rock Rd., Cincinnati, Ohio 45247

Filed May 14, 1979, Ser. No. 38,512

Int. Cl.³ A01L *1/00, 7/04*

U.S. Cl. 168—23 **8 Claims**

1. A horseshoe adapted to be fitted to the hoof of a horse, comprising:

(a) a web defined by a ground surface, a hoof surface and two side walls, the web having a general U-shape configuration; and

(b) an open sided swedge in the ground surface of the web, said swedge being defined by a substantially planar topside disposed between two side walls, each of the two side walls being substantially perpendicular to the topside at

portions proximal thereto, one of the side walls being bifurcated with the portion distal to the topside extending

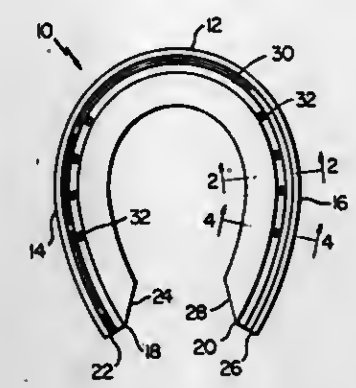

angularly away from the portion of said one side wall proximal to the topside.

4,299,289

FIRE EXTINGUISHER HAVING A HEAT FUSIBLE MEMBER UNDER COMPRESSION

Kiyoshi Kato, 591 Ohizumigakuen-cho, Nerima-ku, Tokyo 107, Japan

PCT No. PCT/JP79/00005, § 371 Date Sep. 11, 1979, § 102(e) Date Jul. 11, 1979, PCT Pub. No. WO79/00491, PCT Pub. Date Jul. 26, 1979.

PCT Filed Jan. 9, 1979, Ser. No. 165,488

Claims priority, application Japan, Jan. 11, 1978, 53-1636; Jan. 18, 1978, 53/4143[U]

Int. Cl.³ A62C *35/02, 37/30*

U.S. Cl. 169—57 **4 Claims**

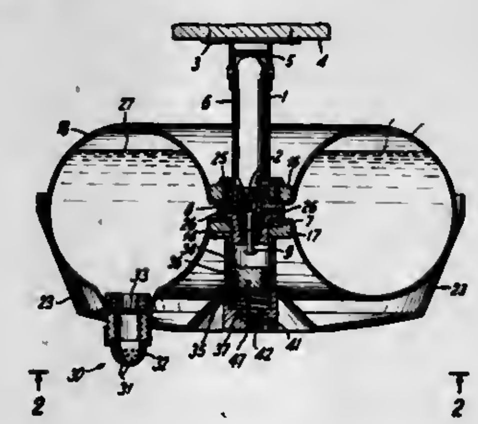

1. A fire extinguisher comprising

a vessel containing a high pressure gas with the inside thereof maintained at a pressure above the atmospheric pressure;

a striker for breaking a cover sealing said vessel;

a frame accommodating a spring applying an impact pressure to said striker;

a holder for storage of resilient energy in said spring;

a set screw mounted in said frame for mounting said holder in position; and

a heat fusible member interposed between said set screw and said holder for applying the pressure of said set screw to said holder, said member being fusible under the heat of the fire and placed permanently under a compressive force.

4,299,290

GRADING MACHINE AND BLADE MOVING STRUCTURE THEREFOR

John F. Nunes, Jr., 2006 Loquot Ave., Patterson, Calif. 95363

Continuation of Ser. No. 893,986, Apr. 6, 1978, abandoned. This application Jul. 2, 1980, Ser. No. 165,347

Int. Cl.³ E02F *3/76, 3/85*

U.S. Cl. 172—4.5 **5 Claims**

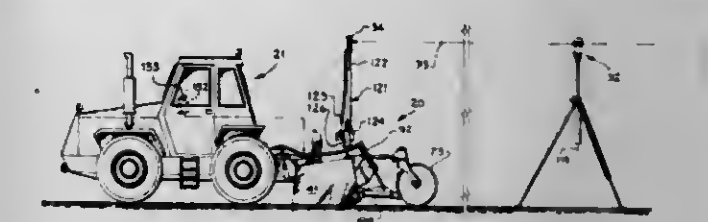

3. In a mobile grading machine of a type adapted to be drawn by a tractor or other towing means comprising a bin-like scraper structure partially open at the bottom and having a back panel thereacross, a scraper blade disposed to extend across the bottom, caster wheels disposed in adjacent trailing relation to said back panel, a parallelogram connection between said back panel and said caster wheels, extensible hydraulic means interposed between said caster wheels and said panel serving to selectively tip said blade relative to the ground, a towing connection protruding forwardly of said bin-like structure adapted to engage a towing connection of a tractor or other towing means and forming a pivot point about which said scraper structure can move as said blade is tipped.

4,299,291

POWER HARROW WITH VERTICAL ROTATING ROTORS

Edmond Oberle, Saverne, France, assignor to Kuhn S.A., Saverne, France

Filed Nov. 15, 1979, Ser. No. 94,356

Claims priority, application France, Nov. 24, 1978, 78 33902

Int. Cl.³ A01B *33/06*

U.S. Cl. 172—49.5 **11 Claims**

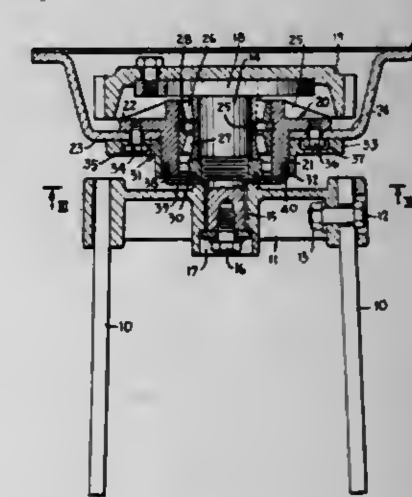

1. Bearing support means and protective means therefor, for use in connection with a power harrow that includes a frame and rotor means, including a plurality of adjacent individual rotors, each rotor comprising in combination:

a rotatable shaft journalled in relation to said bearing support means and adapted to be secured with one end thereof to said rotor means for driving them,

said protective means being supported from said bearing support means, but separate therefrom, and including collar means adapted to abut a portion of said frame, and a part shielding the exterior of said bearing means,

said bearing support means including anti-friction means, a cylindrical portion of said bearing support means fitting into said collar means, and

connecting means securing said collar means to said bearing support means, and being adapted to connect said collar

means and said bearing support means to said frame, whereby said protective means is dismantlable from said bearing support means without disturbing said bearing means, and without disturbing the protective means of an adjacent rotor.

4,299,292

FOLDING BOOM CONSTRUCTION INCLUDING ROLLERS AND RAMPS FOR LIFTING WHEELS CLEAR OF GROUND

William F. Hughes, Kalamunda, Australia, assignor to Australian Agricultural Machinery Pty. Ltd., Belmont, Australia

Filed Aug. 14, 1979, Ser. No. 66,459

Int. Cl.^{3} A01B *73/00*

U.S. Cl. 172—311 **3 Claims**

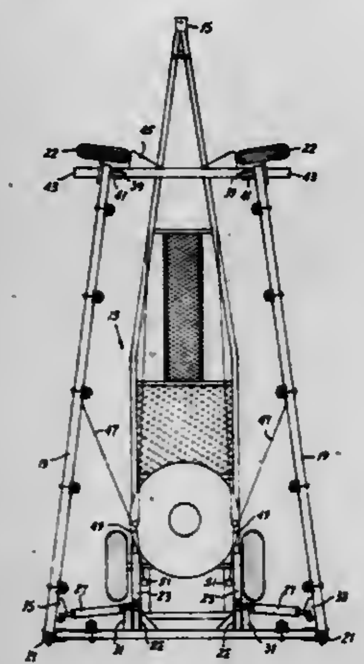

1. A folding boom construction comprising a wheeled frame adapted to be pulled in a direction parallel to the longitudinal axis thereof, a boom assembly adapted to carry tools and comprising a central section, first and second end sections and first and second universal joints each connecting one end of each of said end sections to a respective end of said central section for pivotal movement of said end sections relative to said central section about at least one axis, a pair of wheels each being mounted contiguous to the opposite end of a respective one of said end sections for rotation about a fixed axis that is parallel to the length of the respective end section, means for supporting said boom central section on said wheeled frame for pivotal movement relative to said wheeled frame about a transverse axis, first hydraulic means interposed between said frame and said boom central section for pivoting said boom assembly relative to said frame about said transverse axis between an operative position in which the tools adapted to be carried by said boom assembly may engage the ground and a raised position in which the tools adapted to be carried by said boom assembly will be clear of the ground, said one axis of said universal joints being horizontally disposed when said boom assembly is in its operative position for pivotal movement of said boom end sections relative to said central section to conform to uneven ground conditions, said one axis of said universal joints being vertically disposed when said boom assembly is in its raised position, second hydraulic cylinder means interposed between said boom central section and each of said end boom sections, said second hydraulic cylinder means being operative for pivoting said boom end sections relative to said boom central section when said one axis is vertically disposed for movement of said boom end sections from an aligned position wherein said boom end sections are aligned with said boom central section and a storage position wherein said boom end sections extend generally parallel to the longitudinal axis of said wheeled frame, said wheels being adapted to support the respective end section ends during a substantial portion of their pivotal movement, a pair of rollers each mounted on a respective one of said end sections for rotation about an axis that is substantially parallel to and spaced from the axis of rotation of the wheel carried by the respective end section, and a pair of ramps each projecting downwardly and outwardly from a respective side of said frame, each of said ramps being so aligned with a respective one of said rollers that as said boom end sections pivot from their aligned positions to their storage positions each of said rollers rolls up a respective one of said pair of ramps as said end sections move toward said storage position, thus lifting said wheels clear of the ground, the axis of said rollers each being spaced sufficiently from the axis of the wheel carried by the respective end section so that said wheels will clear said ramps as said rollers engage said ramps to move said boom end sections to their storage positions.

4,299,293

PERCUSSIVE TOOL ANGULAR POSITION DEVICE

Igor V. Nikolaev, ulitsa Fadeeva, 5, kv. 37; Anatoly I. Lednikov, Korovinskoe shosse, 9, korpus 2, kv. 51; Boris G. Goldshtein, ulitsa Molodogvardeiskaya, 24, korpus 1, kv. 26, and Leonid A. Gornik, ulitsa Krasny Kazanets, 3, korpus 5, kv. 139, all of, Moscow, U.S.S.R.

Filed Dec. 7, 1978, Ser. No. 967,525

Claims priority, application U.S.S.R., Dec. 9, 1977, 2552593

Int. Cl.^{3} B25D *17/08*

U.S. Cl. 173—104 **5 Claims**

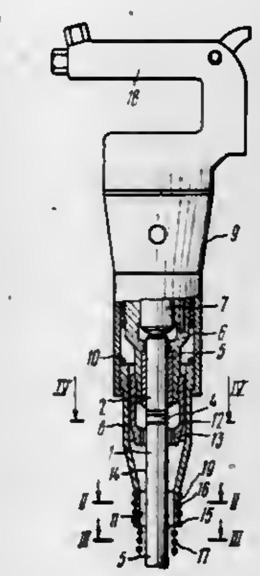

1. A percussive tool comprising a barrel; a working tool mounted for reciprocations in said barrel and having a shank, a working portion, and a collar arranged therebetween; a guide bushing secured in said barrel, said shank of the working tool reciprocating in said guide bushing; means for determining the angular position of said working tool during said reciprocations; an elastic member for positively controlling the angular position of said working tool depending on the position of said means determining the angular position of the working tool, said elastic member having a first portion and a second portion; means for coupling said first portion of the elastic member to said means for determining the angular position of said working tool for a combined rotation, said second portion of said elastic member having a non-circular cross-sectional configuration, and said working portion of said working tool having a cross-sectional configuration corresponding to the cross-sectional configuration of said second portion of the elastic member to thereby result in coupling between said second portion of said elastic member and said working portion to provide combined rotation; and means for causing said reciprocations of said working tool.

4,299,294

ROTARY TOOL WITH AXIAL FEED

Robert C. Womack, Dallas, Tex., assignor to AAA Products International, Inc., Dallas, Tex.

Filed Feb. 11, 1980, Ser. No. 120,560

Int. Cl.^{3} B23Q *5/027;* **B23B** *45/04*

U.S. Cl. 173—148 **16 Claims**

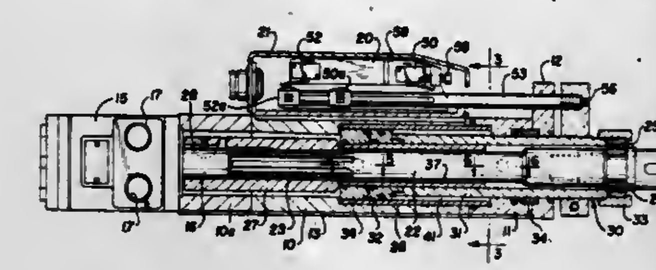

1. A rotary tool comprising
an elongated body providing a longitudinal drive and feed axis;
a spindle rotatably supported on said axis, having means at its forward end for supporting a work element; a rotary motor mounted at one end of said body to provide rotary drive of said spindle; means providing a rotary and sliding coupling between said motor and said spindle;
a quill mounted within said body for relative longitudinal movement along said axis; said body and said quill having coacting means for effecting extension and retraction of said quill;
a combination rotary and thrust bearing mounted at the front face of said quill, supporting said spindle for relative rotation and for axial movement with said quill;
said quill having a squared front end face, and including a bearing retainer mounted on the front end thereof for securing said bearing against said end face in precise squared and coaxial alignment with said quill;
said spindle comprising a drive shaft and a spindle end having coacting means providing coaxial coupling thereof and providing precise coaxial alignment thereof; said drive shaft having a squared front end face, and said spindle end having a face confronting said drive shaft end face for confining said bearing in precise squared alignment therewith; and said spindle end having means supporting said bearing means in precise coaxial alignment therewith.

4,299,295

PROCESS FOR DEGASIFICATION OF SUBTERRANEAN MINERAL DEPOSITS

Amzi Gossard, Oklahoma City, Okla., assignor to Kerr-McGee Coal Corporation, Oklahoma City, Okla.

Filed Feb. 8, 1980, Ser. No. 119,744

Int. Cl.^{3} E21B *4/02, 7/04, 7/08, 47/024, 43/26*

U.S. Cl. 175—45 **24 Claims**

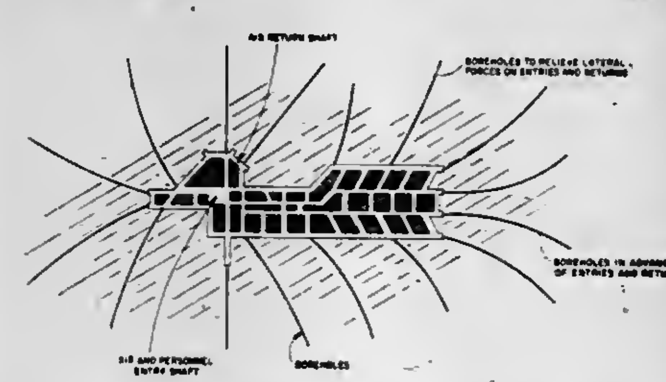

1. A process for removing gases from a subterranean mineral deposit comprising:
providing a drilling apparatus capable of producing horizontal boreholes within the subterranean deposit;
positioning said apparatus within a passage within said deposit to drill a horizontal borehole in a predetermined position to achieve gas removal from said deposit;
drilling said borehole to a predetermined depth employing a continuous survey instrument to provide directional guidance, said survey instrument being positioned near the end of a drill string projecting from said drilling apparatus and being connected to data display devices positioned outside the borehole by an internal drill rod cable system passing through the interior of said drill string, said cable system comprising a series of cable segments of predetermined length sequentially connected together within said drill string;
introducing said cable segments into said drill string by loading said cable segments within selected segments of drill rod in said drill string;
loading a section of said cable into a section of said drill rod by forming said cable segment into a sequentially staggered series of loops which then are positioned within the interior of a section of drill rod, said cable being capable of withdrawal from an end of said section of drill rod in a continuous manner without removal of that portion of said cable remaining within said cable loaded drill rod;
withdrawing said drill string including said survey instrument and a drill bit from the borehole upon completion of drilling to the predetermined depth; and
withdrawing gas which flows into said borehole from the surrounding mineral deposit from said borehole.

4,299,296

IN-HOLE MOTOR DRILL WITH BIT CLUTCH

Bela Geczy, Glendale, Calif., assignor to Smith International, Inc., Newport Beach, Calif.

Filed Jul. 6, 1979, Ser. No. 55,373

Int. Cl.^{3} E21B *4/00*

U.S. Cl. 175—65 **23 Claims**

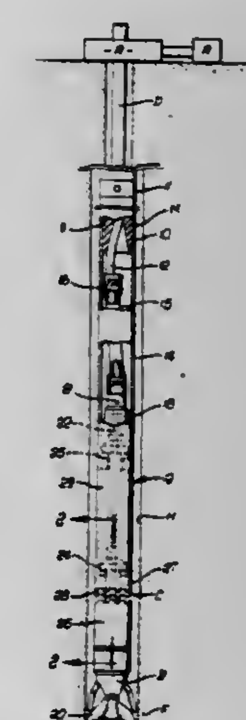

1. An in-hole motor adapted for connection with a rotatable pipe string and a bit, said assembly comprising: a motor stator including a housing structure connectable at one end to a pipe string; a rotor in said stator; a drive shaft extending from the other end of said housing and connected at one end of said shaft with said rotor for rotation therewith to drive a drill bit at the other end of said shaft; fluid passageways through said shaft, bearings between said shaft and said housing to transmit thrust; a fluid passageway through said bearings and said housing; a clutch engageable between said housing and said shaft to couple said housing to a bit for joint rotation; and means to engage and disengage said clutch without increasing the thrust load on said shaft at said other end, said means including a flow restrictor in said housing, said means to engage and disengage said clutch being operable without changing the thrust load on said shaft.

4,299,297
ROTARY PERCUSSION BIT
Thomas C. Lloyd, R. D. #1, Box 327, Pittston, Pa. 18643
Filed Jun. 6, 1979, Ser. No. 46,075
Int. Cl.³ E21B *9/36*
U.S. Cl. 175—410 8 Claims

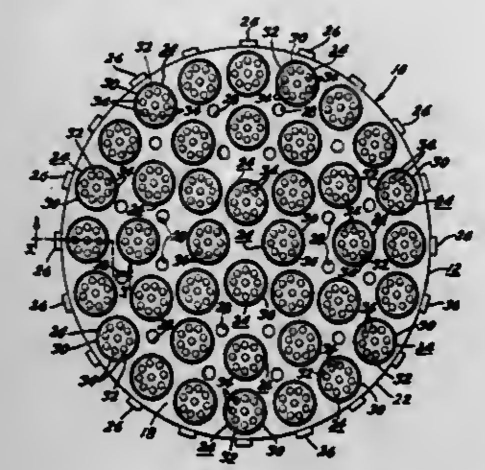

1. A rotary percussion bit, comprising a plate-like member and a plurality of relatively distributed, raised sections on one surface of said plate-like member, said raised sections comprising a filler material in which are disposed raised cutting elements, all of said cutting elements forming a substantially planar cutting surface.

4,299,298
DOWN-THE-HOLE DRILLING
James O. McEnery, Ennis; Frank W. Morton, Shannon, and John J. O'Dea, Clareview, all of Ireland, assignors to Boart International Limited, Johannesburg, South Africa
Continuation of Ser. No. 3,038, Jan. 12, 1979, abandoned. This application Jul. 10, 1980, Ser. No. 168,399
Int. Cl.³ E21B *10/60*
U.S. Cl. 175—418 6 Claims

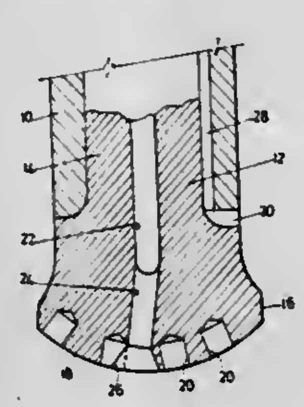

2. A bit for a down-the-hole drill, said bit comprising:
a shank adapted in use to be surrounded by a casing of the drill;
a head having a working face, said head being formed integrally with said shank, and being adapted in use to protrude beyond said drill casing; and
surface means defining a shoulder between said shank and said head;
means defining at least two independent cavities in said bit, arranged to convey flushing fluid from within said drill to the exterior of said drill, and including:
a first cavity extending to said working face; and
a second cavity in the form of a groove formed in said shoulder, said groove extending across said shoulder from the outside to the inside of said shoulder and having a floor arranged for upwardly-deflecting flushing fluid conveyed through the groove as such fluid leaves the groove.

4,299,299
WEIGHING MACHINE
Erich Knothe, Bovenden; Dieter Blawert, Göttingen, and Franz-Josef Melcher, Hardegsen, all of Fed. Rep. of Germany, assignors to Sartorius GmbH, Fed. Rep. of Germany
Filed May 2, 1980, Ser. No. 146,186
Claims priority, application Fed. Rep. of Germany, May 8, 1979, 7913204
Int. Cl.³ G01G *23/00*
U.S. Cl. 177—264 3 Claims

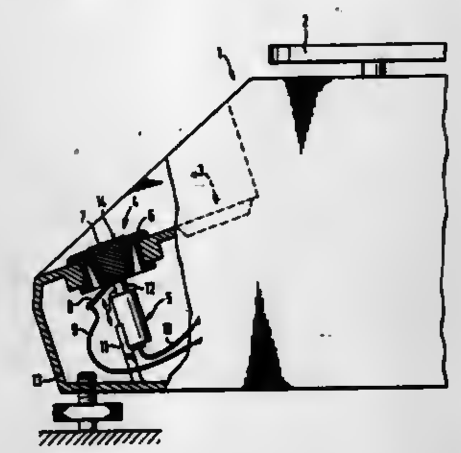

1. A weighing machine with a function key device and an electronic indicator, characterized in that, the function key device is constituted by the combination of an electrically conductive contact sensor and a micro key device having a movable element arranged behind the sensor in operative connection therewith and responding to manual pressure, the micro key device being actuated by manual pressure on the same contact surface as the contact sensor.

4,299,300
VEHICLE STEERING BRAKE AND CLUTCH CONTROL
Gary A. Hakes, North Brunswick, N.J.; Norma G. Shook, Morton; George W. Cackley, Hanna City, both of Ill.; Stephen D. Burdette, Edina, Minn., and Hugh C. Morris, Peoria, Ill., assignors to Caterpillar Tractor Co., Peoria, Ill.
Division of Ser. No. 876,581, Feb. 9, 1978, Pat. No. 4,246,992, which is a division of Ser. No. 688,798, May 21, 1976, Pat. No. 4,093,048. This application Apr. 13, 1979, Ser. No. 29,789
Int. Cl.³ B60K *41/24;* B62D *11/08*
U.S. Cl. 180—6.2 9 Claims

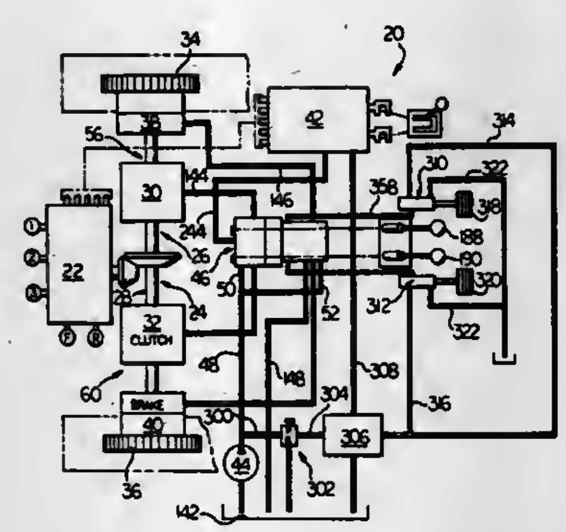

1. In a vehicle in which driving force is applied to both sides thereof, including brake systems associated respectively with both sides thereof and responsive to fluid pressure from a source thereof, each brake system associated with a side of the vehicle comprising brake means actuatable to brake that side of the vehicle, and releasable to release that side of the vehicle, a control apparatus for each brake system comprising:

valve means comprising a valve body and a valving spool movably disposed in a bore defined by the valve body;
means for providing fluid communication between said source and said valve body bore;
means for providing fluid communication between said valve body bore and said brake means;
means for providing fluid communication from said valve body bore and through which pressure may be released from said valve body bore;
the valving spool being movable to first and second positions relative to said valve body, the valving spool in said first position providing communication of fluid pressure from said source through said means for providing fluid communication between said source and said valve body bore, through said means for providing fluid communication between said valve body bore and said brake means, to said brake means, the valving spool in the second position allowing release of fluid pressure from said brake means through said means for providing fluid communication between said valve body bore and said brake means, and said means for providing fluid communication from said valve body bore, and through which pressure may be released;
wherein the brake means are applied upon release of fluid pressure therefrom, and released upon application of fluid pressure thereto;
actuator means, and means operatively coupled with said actuator means and valving spool so that movement of said actuator means in one direction provides movement of said valving spool to its first position, and movement of the actuator means in another direction provides movement of the valving spool to its second position; and
means operatively associated with said valving spool for selectively providing movement of said valving spool to said second position to allow release of fluid pressure from said brake means, independently of the movement of the actuator means.

4,299,301
RANDOM MOTION MECHANISMS
Pierre Janin, 42 rue de Savonniere, 28230 Epernon, France
Filed Mar. 22, 1979, Ser. No. 22,775
Claims priority, application France, Mar. 23, 1978, 78 08432
Int. Cl.³ B62D *11/04;* A63H *17/00*
U.S. Cl. 180—6.5 14 Claims

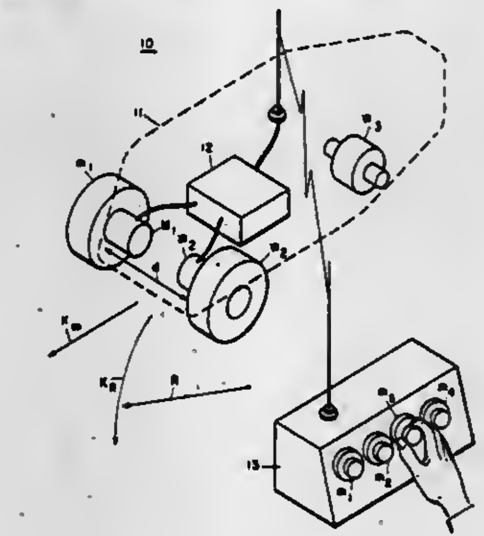

1. A random motion mechanism comprising
at least one driving element in the form of a drive wheel, a random signal generator for generating a randomly varying set of signals,
and means responsive to the signals from said random signal generator for operating said drive wheel with randomly varying speeds.

4,299,302
POWER STEERING DEVICE FOR VEHICLES
Masao Nishikawa, Tokyo; Yoshihiko Toshimitsu, Asaka; Toshihiko Aoyama, Tsurugashima; Tokuro Takaoka, Takaidohigashi; Takashi Aoki, Asaka, and Yoichi Sato, Fujimi, all of Japan, assignors to Honda Giken Kogyo Kabushiki Kaisha, Tokyo, Japan
Filed Nov. 8, 1979, Ser. No. 92,499
Claims priority, application Japan, Nov. 14, 1978, 53-140695
Int. Cl.³ B62D *3/12, 5/10;* F15B *9/10*
U.S. Cl. 180—148 7 Claims

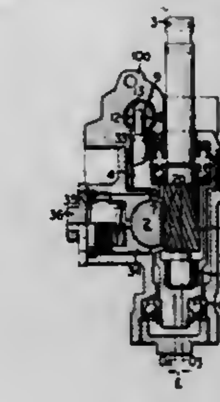

1. A power steering device for a vehicle comprising: a pinion shaft having a pinion and operably connected with a steering wheel; a rack rod operatively connected to steerable wheels and having a rack in mesh with the pinion of said pinion shaft within a gear box; a power cylinder having a first and a second hydraulic chamber for hydraulically actuating said rack rod; a changeover valve for selectively connecting said first and second hydraulic chambers of said power cylinder with a hydraulic pressure source and an oil reservoir; the improvement comprising an oscillating cage rotatably mounted on said gear box and rotatably supporting said pinion shaft in a manner such that the axis of said oscillating cage is offset a certain distance from the axis of said pinion shaft and lies intermediate the axis of the pinion shaft and the meshing point between the pinion and rack, whereby said oscillating cage is caused to rotate about its axis relative to said gear box when steering torque is applied to said pinion shaft; and means for operatively connecting said oscillating cage to said changeover valve such that said changeover valve is actuated by the rotary movement of said oscillating cage.

4,299,303
NOISE ATTENUATING STETHOSCOPE
Thomas W. Clark, 611 Westwinds Dr., Palm Harbor, Fla.
Filed Mar. 20, 1980, Ser. No. 131,901
Int. Cl.³ A16B *7/02*
U.S. Cl. 181—131 6 Claims

1. In a noise attenuating headset having first and second sound attenuating ear cups coupled to the end of a headband, a noise attenuating stethoscope comprising:
a. A pair of ear tubes each having an ear piece coupled to a first end thereof, each of said ear tubes extending laterally through an aperture in the side of each ear cup;
b. resilient swivel means disposed within the aperture and each ear cup and surrounding the outer surface of each ear tube for acoustically sealing said ear tubes and said ear cups and for coupling said ear tubes to the ear cups in an angularly deflectable and laterally displaceable mode;
c. locking means mounted on each of said swivel means and operatively engageable with each of said ear tubes, said locking means comprising a bushing fixedly attached to said resilient swivel means and surrounding said outer surface of each of said ear tubes, a portion of said bushing extending outwardly from said ear cup, and moveable means engageable with said portion for compressing said portion into frictional engagement with said outer surface.

whereby said ear tubes may be locked to prevent lateral displacement while still permiting angular deflection;
d. a sound pick up; and

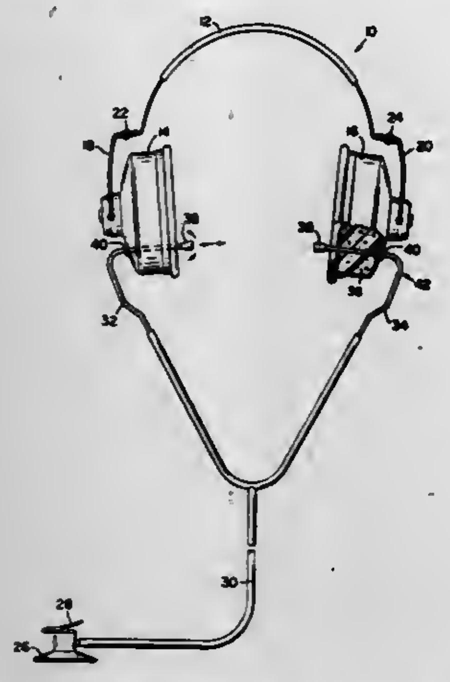

e. a Y-shaped flexible conduit having a first end coupled to said sound pick up and second and third ends coupled to a second end of each ear tube.

4,299,304
EXPONENTIAL FOLDED HORN SPEAKER ENCLOSURE
Gary A. Rebsch, 14016 Shippers La., Rockville, Md. 20853
Filed Jul. 1, 1980, Ser. No. 162,929
Int. Cl.³ H05K *5/00;* **G10K** *11/00*
U.S. Cl. 181—144 **10 Claims**

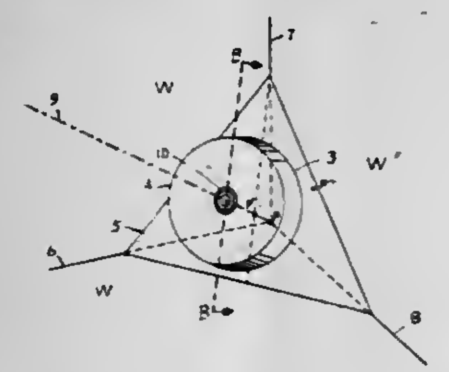

1. A folded horn loudspeaker enclosure comprising planar anterior and posterior walls, and first, second and third conical encircling sidewalls, said sidewalls being mounted coaxially alternately on said anterior and posterior walls, enclosing first, second and third consecutive stages of exponentially increasing cross sectional area,
said posterior wall shaped as a planar equilateral triangle, forming a substantially airtight secondary enclosure when placed into contact with the three mutually perpendicular cooperating surfaces of a floor or ceiling corner of a room, and supporting said second sidewall,
the geometric center point of said posterior wall and the common point of said three mutually perpendicular cooperating surfaces defining a Center Line, with which all enclosure walls are coaxial, in absolute symmetry with each of the three cooperating surfaces,
said anterior wall shaped as a circular disc and supporting said first and third sidewalls,
said first encircling sidewall shaped as a truncated cone, the larger end forming a communicating port to the second stage at the posterior wall, the smaller end enclosing the first loudspeaker and mounting over a circular loudspeaker hole coaxial with the Center Line on said anterior wall, permitting free communication of said loudspeaker with the air inside and outside said folded horn enclosure,
said second encircling sidewall shaped as a truncated cone of larger diameter than said first sidewall, the larger end forming a communicating port to the third stage at said anterior wall, the smaller end mounted coaxially with the Center Line on said posterior wall,
said third encircling sidewall shaped as a truncated cone of larger diameter than said second sidewall, the larger end forming a communicating port to said three cooperating surfaces, the smaller end mounted to the edge of said anterior wall,
said three coaxial sidewalls enclosing within and between themselves a cross sectional area that continuously expands with distance from the first loudspeaker, communicating through first, second and third stages in exponentially increasing sequence, thereafter communicating with the cooperating surfaces to form a fourth stage of a large exponential horn.

4,299,305
APPARATUS FOR DAMPING NOISE FROM EXHAUST AIR OUTLETS
Gunnar V. Eriksson, Högbyn, S-890 31 Arnäsvall, Sweden
Filed Apr. 24, 1979, Ser. No. 32,757
Claims priority, application Sweden, May 12, 1978, 7805502
Int. Cl.³ F01N *1/10*
U.S. Cl. 181—230 **11 Claims**

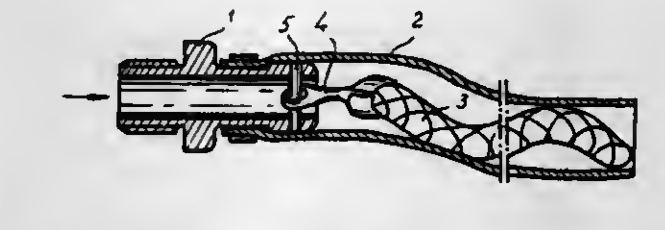

1. An exhaust muffler for a pneumatic motor, comprising:
a flexible conduit section of an exhaust passage connected to the motor, flexible absorption means, located in said flexible conduit section, comprising at least one flexible absorptive element, said flexible absorptive element comprising a substantially solid core of an elastic porous material enclosed in a flexible perforated envelope and having an outer diameter considerably less than the inner diameter of said flexible conduit section, thereby leaving an annular exhaust air passage past said at least one flexible absorptive element and between said flexible conduit section and said at least one flexible absorptive element, and means coupled to said flexible absorptive means for securing said absorptive means against longitudinal movement thereof in said flexible conduit section.

4,299,306
EXTENSION LADDER LOCK
Harvey G. Hawkins, Salem, Ind., assignor to Emerson Electric Co., St. Louis, Mo.
Filed Dec. 7, 1979, Ser. No. 101,150
Int. Cl.³ E06C *7/06*
U.S. Cl. 182—210 **13 Claims**

1. A lock for an extension ladder having a stationary frame section and a movable frame section, each of said stationary and movable sections having fixed rungs or stations, said lock comprising a first member forming a guideway embracing a fixed station of said movable section and having an open end for receiving stations of the fixed frame section of said ladder, the first member including a downwardly extending projection for containing the stations within the guideway, means for connecting the first member to said movable frame section of the ladder, a second member forming an arm for guiding the lock past the stations of the stationary frame section of said ladder, and a pivotal connection between the first member and the second member, the connection being located to a first side

of a center line of the lock and the projection being located to a second side of the center line when the lock is freely hanging from the means connecting the first member to the frame section, the projection and the pivotal connection further

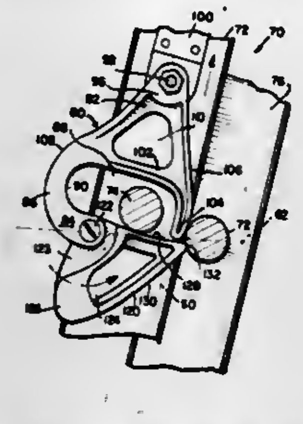

being so located that when the said second member is in guiding position and a horizontal line bisects a rung or station of said ladder and is also tangent to the free tip of said projection, the said pivotal connection is always above the said horizontal line.

4,299,307
OIL LEVEL INDICATING AND REFILLING DEVICE
Nathaniel Scott, 501 E. Bolton, Savannah, Ga. 31401
Filed Jun. 5, 1979, Ser. No. 45,699
Int. Cl.³ F01M *11/12, 11/06*
U.S. Cl. 184—103 R **8 Claims**

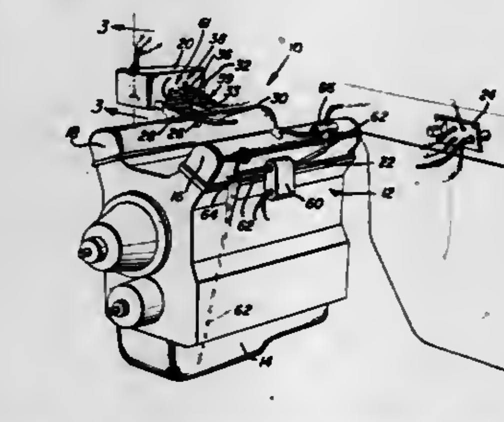

1. An oil level indicating and refilling device for use on an internal combustion engine, comprising;
an auxiliary reservoir for storing oil to replenish the oil supply of said internal combustion engine, said reservoir being mounted over said engine;
a connector line containing a normally closed valve, said connector line being connected between said auxiliary reservoir and said internal combustion engine;
a sensor connected to the oil pan of said internal combustion engine and including a switch which is actuated upon the oil level in said oil pan falling below a predetermined minimum;
a first indicator light connected to said sensor, said indicator light being energized upon closure of said switch; and
manual actuation means connected to said valve for opening said valve.

4,299,308
POSITION CONTROLLED ELEVATOR DOOR MOTION
Wu S. Shung, South Windsor, Conn., and J. Mark Deric, Johnson City, Tenn., assignors to Otis Elevator Company, Hartford, Conn.
Filed Dec. 27, 1979, Ser. No. 107,671
Int. Cl.³ B66B *13/08*
U.S. Cl. 187—29 R **5 Claims**

1. An elevator for servicing a plurality of floor landings adjacent an elevator hoistway in a building, comprising:
hall call means for registering requests for up or down service at each of said landings;
a car movably disposed in said hoistway;
car motion means for providing and arresting the motion of said car;
car controller means for providing signals indicative of conditions of said car and of said car motion means, for exchanging signals with said car, for controlling said car motion means to cause said car to move in a selected up or down direction in said hoistway and to stop in response to said signals indicative of conditions of said car and of said car motion means and to signals received from said car;
said car including a door for providing access to and from said car, a door motion means for opening and closing said door, switch means for registering calls for service by passengers in said car, and a cab controller for providing cab signals indicative of calls for service registered by said switch means, conditions of said door and the position of said car

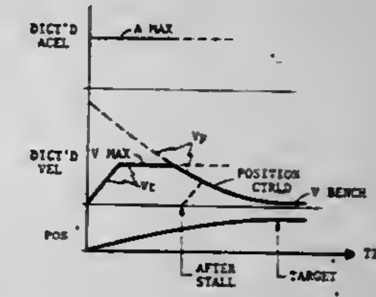

relative to any adjacent one of said landings, for exchanging signals with said car controller, and for controlling said door motion means in response to said cab signals and in response to signals received from said car controller;
characterized by said cab controller comprising signal processing means for providing a first dictated door velocity signal as an increase at a predetermined acceleration from a small initial door velocity to a predetermined maximum velocity, for providing a second dictated velocity signal as a function of the difference between the present position of the door indicated by said signals indicative of conditions of said door and a predetermined target position for said door, for providing a selected dictated velocity signal as the lower valued one of said first dictated velocity signal and said second dictated velocity signal, and for providing a door-motion commanding signal to said door motion means as a function of the difference between said selected dictated velocity signal and the actual velocity of said door as indicated by said signals indicative of conditions of said door.

4,299,309
EMPTY ELEVATOR CAR DETERMINATION
Joseph Bittar, Simsbury, Conn., and J. Mark Deric, Johnson City, Tenn., assignors to Otis Elevator Company, Hartford, Conn.
Filed Dec. 27, 1979, Ser. No. 107,672
Int. Cl.³ B66B *3/00*
U.S. Cl. 187—29 R **6 Claims**

1. An elevator car movably disposed in a hoistway of a building for servicing a plurality of floor landings served by doors adjacent said hoistway, comprising:
passenger-actuatable switch means for registering demands for service by said car, and for providing demand signals indicative thereof; characterized by:
signal processing means operative in each of a series of repetitive cycles recurring several times per second for monitoring said demand signals and for storing, in each cycle, previous demand signals in response to said demand signals, for comparing said demand signals monitored in each cycle with said previous demand signals stored in a

cycle next preceding such cycle, and for providing a car empty signal in th event that said demand signals of said

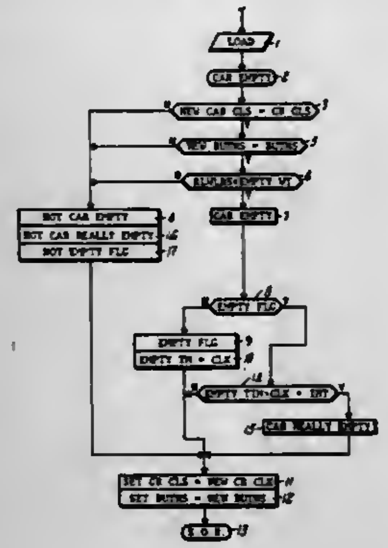

one cycle are the same as said previous demand signals stored in the next preceding cycle.

4,299,310
ANTI-SKID DEVICE FOR MOTOR VEHICLES
Göran A. Törnebäck, Källvägen 11 B, Linköping, Sweden S-582 69
Filed Apr. 9, 1979, Ser. No. 28,315
Claims priority, application Sweden, Apr. 10, 1978, 7803996; Nov. 22, 1978, 7812029
Int. Cl.³ B60T *1/00*
U.S. Cl. 188—4 R **7 Claims**

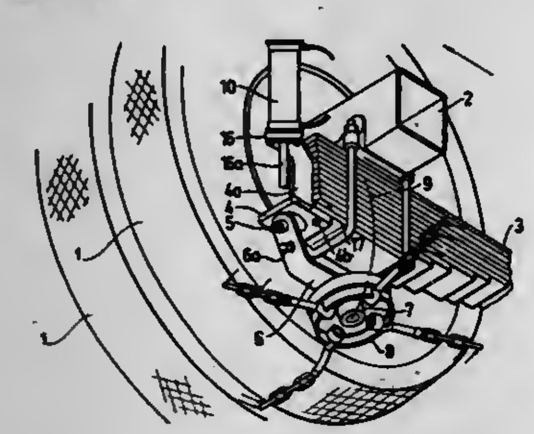

1. An anti-skid device for motor vehicles comprising a spreader pulley centrally supported for rotation, said spreader pulley has evenly spaced at the periphery edge of said pulley a plurality of chains, said chains being spaced apart by steel wires having an inner portion and an outer portion and coated with rubber, the inner portion of said rubber coated steel wires being connected to said pulley and the outer portion of said steel wires being connected to said chains, the spacing of said steel wires around the periphery of said spreader being such that the chains are prevented from approaching one another and getting entangled and a periphery portion of the pulley adapted for frictional engagement with the inward surface of a tire on a drive wheel of a vehicle and by action of the friction therebetween to rotate such that the chains by effect of centrifugal force extend substantially perpendicularly outward from their center of rotation and are thereby driven between the tire and the ground, said spreader pulley being supported rotatably on one end of an arm which at its other end is pivotally supported about an inclined journal, said inclined journal serving as a center for a pivotal movement of the spreader pulley with respect to said inclined journal from a protected non-operative position, inward and upward and to an operative position, outward and downward in contact with the tire, said arm being actuated by a pneumatic cylinder having a piston rod which effects in one direction a swing movement of the spreader pulley from the non-operative position to the contact position and thereafter maintains a contact pressure against the tire and further including spring means for returning the spreader pulley to the non-operative position, and manual control means for controlling the cylinder to provide pressure to and, respectively, release pressure from the cylinder.

4,299,311
DISC BRAKE
Kenji Shirai, Susono, and Minoru Takeuchi, Nagoya, both of Japan, assignors to Toyota Jidosha Kogyo Kabushiki Kaisha, Toyota, Japan
Filed Nov. 23, 1979, Ser. No. 96,972
Claims priority, application Japan, Jun. 29, 1979, 54-82512
Int. Cl.³ F16D *55/224, 63/00, 65/14*
U.S. Cl. 188—70 R **9 Claims**

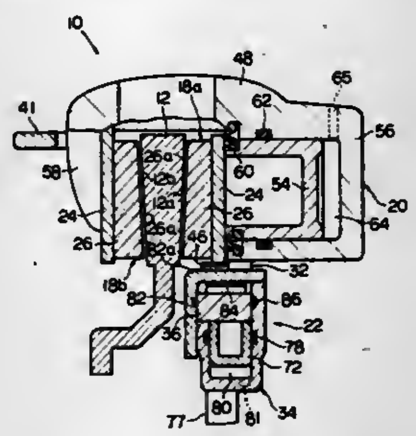

1. A disc brake comprising:
a rotatable brake disc having a diagonally inclined circular pressure bearing surface;
a pad assembly disposed on a side of said brake disc; and
a first and second operation means for engaging said pad assembly with said pressure bearing surface of said disc, said first operation means displacing said pad assembly substantially parallel to the axis of rotation of said brake disc, and said second operation means displacing said pad assembly nonparallel to the axis of rotation of said brake disc.

4,299,312
ELECTROMAGNETIC TRACK BRAKE FOR A RAILWAY VEHICLE
Nils K. Bengtsson, Dalby, and Bo B. Wikström, Malmö, both of Sweden, assignors to SAB Industri A.B., Landskrona, Sweden
Filed Oct. 16, 1979, Ser. No. 85,428
Claims priority, application Sweden, Nov. 6, 1978, 7811429
Int. Cl.³ F16D *65/34*
U.S. Cl. 188—165 **7 Claims**

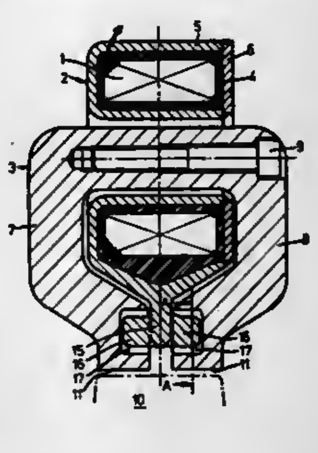

1. An electromagnetic track brake apparatus to be mounted on a railway vehicle for interaction with a ferromagnetic rail, the brake apparatus comprising in combination, a brake energizing coil disposed in an elongate oval frame of non-ferromagnetic material, braking shoe means comprising a set of ferromagnetic sections forming generally U-shaped brake shoe means having pole legs loosely surrounding the oval frame and coil therein for permitting relative motion of frame and shoe means and having the ends of the U-shaped shoe comprising braking surfaces disposed adjacent the rail to frictionally engage the rail by movement of the shoe means thereagainst when the coil is energized, said braking shoe means being movable about the loosely surrounded frame to thereby move said ends into frictional engagement with the rail and absorb braking forces, and means distributing braking forces between the shoe means and frame comprising interlocking means extending from the frame between said pole legs to near the ends of the U-shaped shoe including a projecting portion of predetermined shape, and cooperative interlocking means disposed substantially entirely between the pole legs within the U-shape of each said shoe section for engaging the projecting portion for transmitting braking forces from the braking shoe means to said frame, wherein the interlocking means and projecting portion in cross section is substantially Y-shaped.

4,299,313
MOBILE LUGGAGE CASE HANDLE ASSEMBLY
Robert A. Null, Littleton, Colo., assignor to Samsonite Corporation, Denver, Colo.
Filed Jul. 7, 1980, Ser. No. 166,312
Int. Cl.³ A45C *5/14, 13/26*
U.S. Cl. 190—18 A **7 Claims**

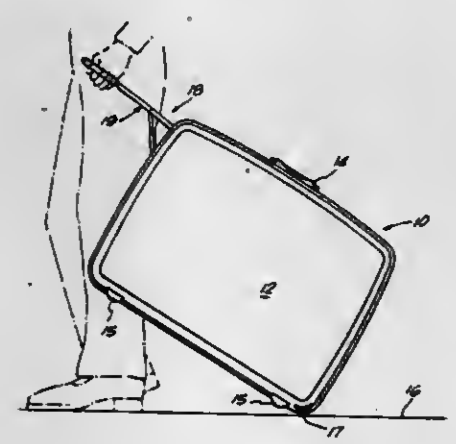

1. A handle assembly for pushing/pulling a luggage case constructed of first and second shells interconnected by a recessed metal channel and having a set of wheels at a lower corner, comprising:
an elongated handle member having an end pivotally connected to the channel; and
a brace including
a first brace arm having an end pivotally interconnected to the handle member at a point spaced from the member pivotal connection to the channel;
a second brace arm having an end pivotally connected to the recessed channel, and
the first and second brace arms being pivotally interconnected to each other with, portions of each brace arm overlapping each other at the pivotal interconnection and coming into contact with each other at one point of the pivoting to form one limit of the extent of pivoting.

4,299,314
CLUTCH BRAKE MECHANISMS
David Parsons, Kenilworth; Maurice Taylor, Leamington Spa, and Alastair J. Young, Kenilworth, all of England, assignors to Automotive Products Limited, Leamington Spa, England
Filed Aug. 22, 1979, Ser. No. 68,538
Claims priority, application United Kingdom, Sep. 8, 1978, 36195/78
Int. Cl.³ B60K *41/24*
U.S. Cl. 192—12 C **9 Claims**

1. A friction clutch, a friction brake for a drive member driven by the friction clutch and a hydraulic master cylinder assembly, for sequential operation of the clutch and clutch brake under control through the master cylinder, and in which the master cylinder comprises:
a housing having a bore therein;
an inlet port to admit fluid to said bore from a fluid reservoir;
a first outlet port from said bore with means for connection to a hydraulic actuator for said friction clutch;
a second outlet port from said bore with means for connection to a hydraulic actuator for said friction brake;
a piston slidable in said bore to control communication

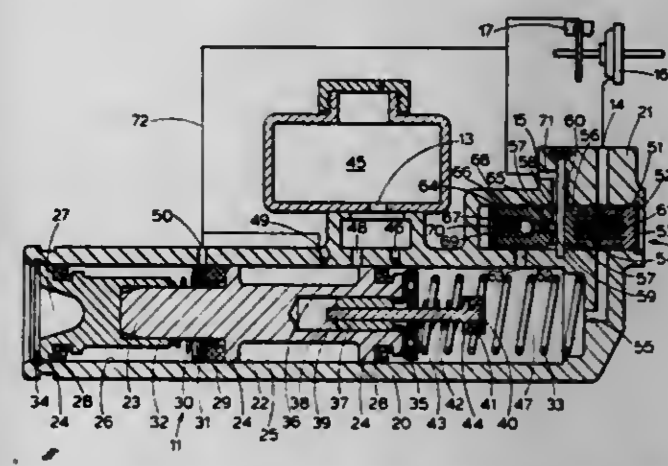

between said inlet port and said first and second outlet ports;
resilient piston return means housed in said bore;
said first outlet port being open to said friction clutch actuator up to a given first displacement of said piston;
a closure means carried by said piston for closing said first outlet port at a given first displacement of said piston; and
valve means responsive to fluid pressure at said first and second outlet ports for effecting communication between said second outlet port and the friction brake actuator above a given second further displacement.

4,299,315
PASSAGE STRUCTURE OF LOCK-UP TORQUE CONVERTER USING SPECIALLY DESIGNED SPACER
Kunio Ohtsuka, Yokohama, Japan, assignor to Nissan Motor Company, Limited, Yokohama, Japan
Filed Mar. 23, 1979, Ser. No. 23,374
Claims priority, application Japan, Apr. 4, 1978, 53/38856
Int. Cl.³ F16D *25/00*
U.S. Cl. 192—3.3 **4 Claims**

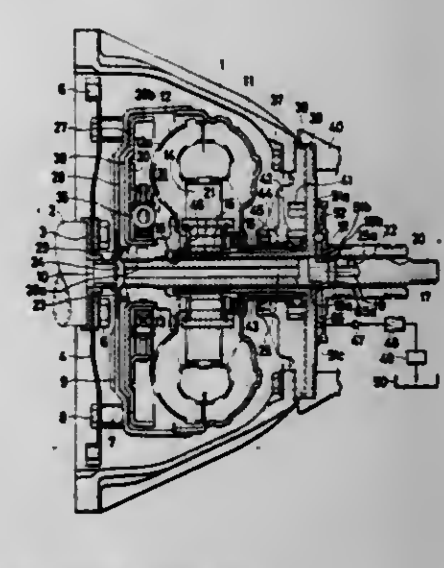

1. In a lock-up torque converter
an input member;
a converter cover driven by said input member;
a pump impeller secured to said converter cover and forming therewith a chamber;

an output shaft having first and second spacers disposed thereon
a turbine runner within said chamber connected to said output shaft;
a clutch piston mounted within said chamber;
a stationary sleeve rotatably receiving said output shaft and defining therein an annular space between said first and second spacers;
a pump;
a pump cover for said pump radially extending from said stationary sleeve;
a pump driving sleeve secured to said pump impeller and operatively connected to said pump to drive the latter, said pump drive sleeve surrounding a portion of said stationary sleeve and forming therewith a passage communicating with the inside of said pump impeller;
a control valve;
said output shaft having an axial passage and a radial passage communicating with said axial passage;
a third spacer mounted within said annular space to divide the latter into a first annular chamber communicating with the inside of said turbine runner and into a second annular chamber communicating with said radial passage of said output shaft;
said pump cover having a first passage terminating at a first port positioned opposite to said third spacer and a second passage terminating at a second port positioned opposite to said third spacer;
said second passage of said pump cover communicating with said control valve;
said third spacer being formed with a first cutout mating with said first port of said pump cover and opening to said first chamber to provide communication between said first port of said pump cover and said first annular chamber;
said third spacer being also formed with a second cutout mating with said second port of said pump cover and opening to said second annular chamber to provide communication between said second port and said second annular chamber.

4,299,316
ADJUSTABLE SEAT PARTICULARLY IN MOTOR VEHICLES
Adolf Reinmoeller, Remscheid, Fed. Rep. of Germany, assignor to Keiper Automobiltechnik GmbH & Co. KG, Remscheid, Fed. Rep. of Germany
Filed Jan. 7, 1980, Ser. No. 110,385
Claims priority, application Fed. Rep. of Germany, Jan. 13, 1979, 2901208
Int. Cl.³ F16D *21/02;* **A47C** *1/024*
U.S. Cl. 192—48.8 **8 Claims**

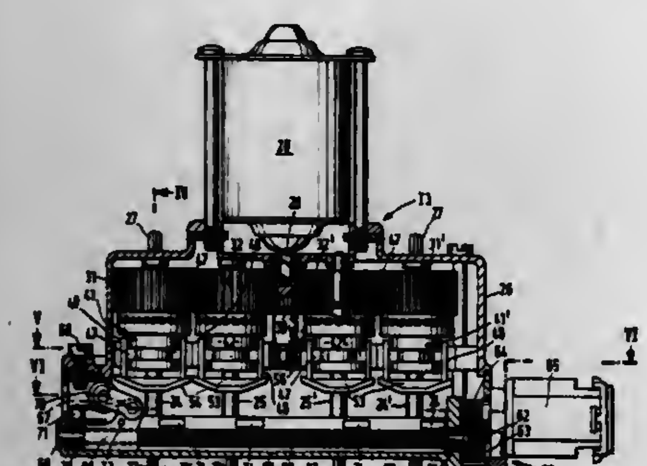

1. An adjustable seat particularly for use in motor vehicles, including a plurality of position adjusters for the seat, a common driving motor, a power distributing gear unit having an input coupled to said driving motor and a plurality of driving shafts coupled to the assigned adjusters, comprising: a control unit arranged in said power distributing gear unit and including a separate adjustment motor and a plurality of mechanical control devices driven by said adjustment motor to selectably couple said driving shafts to said driving motor.

4,299,317
SYNCHRO-MESH TYPE GEAR TRANSMISSION
Nobuaki Katayama, Toyota, Japan, assignor to Toyota Jidosha Kogyo Kabushiki Kaisha, Toyota, Japan
Filed Nov. 7, 1979, Ser. No. 92,217
Claims priority, application Japan, Nov. 15, 1978, 53-156042[U]
Int. Cl.³ F16D *23/06*
U.S. Cl. 192—53 F **4 Claims**

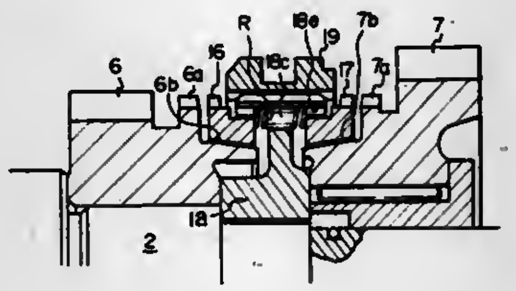

1. A synchro-mesh gear transmission of the type having a clutch hub which is rigidly mounted on an output power shaft, the clutch hub being provided with axial slots in which springs are axially inserted, the springs being arranged so as to urge a synchronizer ring against a conically tapered surface of a driven shift gear, the driven shift gear being mounted on the output power shaft so as to be rotatable with respect to the output power shaft, the synchronizer ring thereby exerting a frictional resistance against rotation of the driven shift gear, the driven shift gear being selectively coupled to the clutch hub by a sleeve member which is in constant meshing engagement with the clutch hub, the transmission being further characterized in that at least a portion of an inside wall of at least one guide slot is in a peripheral flange portion of the clutch hub so as to provide support against axially transverse deformation of the spring.

4,299,318
UNIT HUB FOR BICYCLES
Takashi Segawa, Sakai, Japan, assignor to Shimano Industrial Company Limited, Osaka, Japan
Continuation of Ser. No. 763,146, Nov. 18, 1976, abandoned. This application Feb. 22, 1979, Ser. No. 14,097
Claims priority, application Japan, Dec. 2, 1975, 50-164605
Int. Cl.³ F16D *23/00, 41/04*
U.S. Cl. 192—64 **2 Claims**

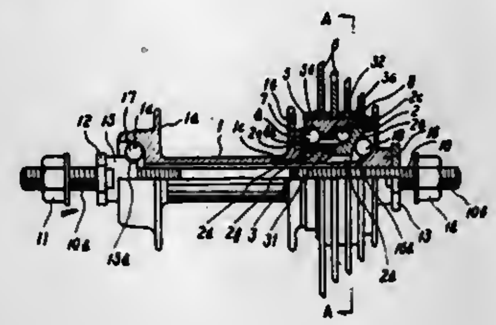

1. A unit hub for a bicycle, comprising:
(a) a threaded hub shaft securable to a bicycle frame;
(b) a hub body rotatably supported on the outer peripbery of said hub shaft, said hub body having on the inside of one axial end thereof a ball race and on the inside of the other end thereof a screw thread;
(c) a cylindrical member screwed to said thread of the hub body, said cylindrical member having an axially external portion radially outward extending to define an extension, said extension having ball races at axially outer and inner surfaces thereof; a rotary control opening within the center of said cylindrical member; said cylindrical member having a cylindrical shape at its axially inward portion, said cylindrical portion having at its inner end a first screw thread in mesh with said thread of the hub body and a second screw thread on the outer periphery of that same end, axially outward of and adjacent to said first thread; said outer periphery axially outward of said first thread being of larger diameter than said first thread to define a shoulder between said first and second threads, said shoulder abutting against the adjacent end face of the hub body;
(d) a bearing screwed onto said second screw thread of said cylindrical member; said bearing having at its outer peripbery a ball race and at its inner periphery the screw threads in mesh with said second thread;
(e) an annular driving member rotatably supported between said axially inner ball race of the cylindrical member and said ball race of the bearing, through balls on said races; said driving member having at its outer periphery one or more sprockets and at axially both sides of its inner periphery, ball races complementary to said ball races of said bearing and cylindrical member;
(f) a unidirectional-rotary transmission between the outer periphery of said cylindrical member and the inner periphery of said annular driving member, located between both said ball races of the driving member, the distance between said ball races of said bearing and the axially inner ball race of said cylindrical member being constant;
(g) a first ball holder having a ball race complementary to the ball race of said hub body and being screwed onto one end of said shaft so as to support rotatably said one end of the hub body through balls therebetween; and
(h) a second ball holder having a ball race complementary to the outer ball race of said cylindrical member and being screwed onto the other end of said hub shaft so as to rotatably support the axially outside portion of said cylindrical member through balls therebetween; the distance between said hub body ball race and the ball race on the axial outer surface of the cylindrical member extension always remaining constant when the unit hub is properly assembled.

4,299,319
TWO-SPEED CLUTCH
John Bochan, Louisville, Ky., assignor to General Electric Company, Louisville, Ky.
Filed Sep. 4, 1979, Ser. No. 72,273
Int. Cl.³ F16D *43/06, 21/00*
U.S. Cl. 192—103 B **12 Claims**

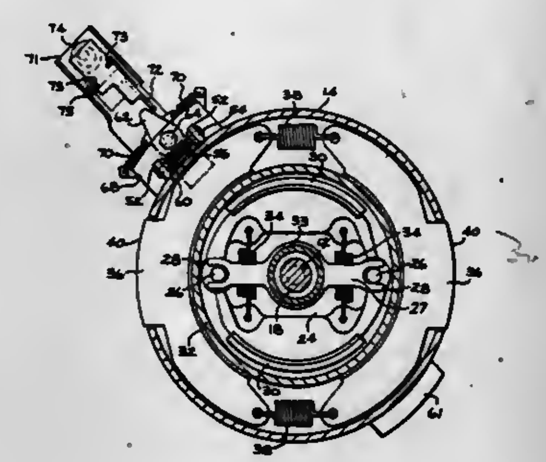

1. A clutching arrangement for establishing rotary drive between a rotary input member and a rotary output member, said rotary output member having portions thereof disposed radially outward from adjacent portions of said rotary input member to form a clearance space therebetween, said clutching arrangement including:
an elongated resilient element secured to an adjacent portion of said input member within said clearance space between said input and output members and having at least one end extending transversely to the axis of rotation of said input member, said at least one end of said elongated resilient element being preloaded to be deflected radially outwardly by centrifugal forces acting thereon upon rotation of said input member at a predetermined rate of rotation and return to its original position upon a reduction in the rate of rotation of said input member below said predetermined rate; and
latching means carried by said output member and having a portion located to move into engagement with said at least one end of said elongated resilient element after a predetermined extent of said radially outward movement of said at least one end;
whereby a rotary drive connection is established between said input member and said output member upon movement of said at least one end of said predetermined extent of radially outward movement.

4,299,320
WET CLUTCH FLUID FLOW DEFLECTOR
Robert L. Delsman, and Norman D. Thompson, both of Dallas, Oreg., assignors to The Boeing Company, Seattle, Wash.
Filed Dec. 26, 1979, Ser. No. 107,476
Int. Cl.³ F16D *13/74*
U.S. Cl. 192—113 B **8 Claims**

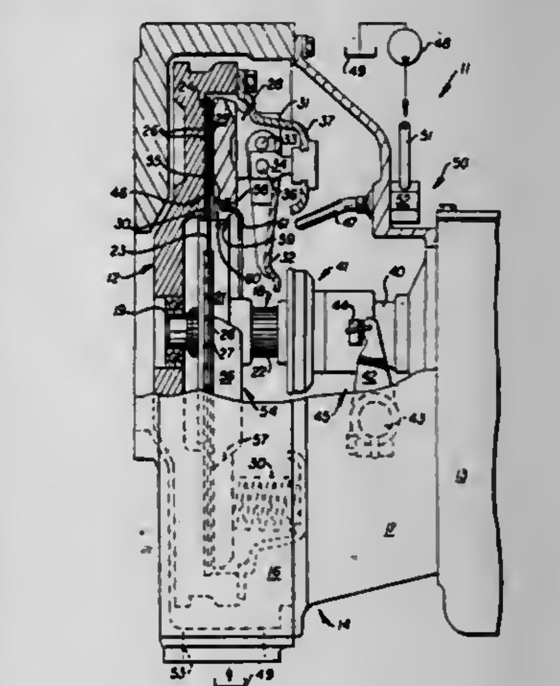

1. In a clutch assembly (11) having a drive transmitting member (12), a rotatable mainshaft (18), a clutch disk (23) positioned in coaxial relationship with said mainshaft (18) and being rotatable therewith, a pressure plate (29) having an opening through which said mainshaft (18) extends, the opening being of larger diameter than said mainshaft (18), the pressure plate being of a construction sufficient for exerting engagement pressure against said drive transmitting member (12) through said clutch disk (23), and at least one nozzle (47) located away from both of said mainshaft (18) and said pressure plate (29) and being directed towards said pressure plate opening, the improvement comprising:
an annular fluid deflector member (56) secured to said pressure plate (29) at said opening thereof in coaxial relationship with said clutch disk (23) and with said mainshaft (18) in position to receive fluid that is directed into said opening by said nozzle (47), said fluid deflector member (56) having an annular inner surface (60) of continuously increasing diameter which extends to a location (46) between said pressure plate (29) and said drive transmitting member (12).

4,299,321
MOVING WALKWAY
Samuel S. Hermawan, 2707 Lincoln Way, Apt. 303, Ames, Iowa 50010
Filed Nov. 29, 1979, Ser. No. 98,495
Int. Cl.[3] B65B *15/00*
U.S. Cl. 198—321 **3 Claims**

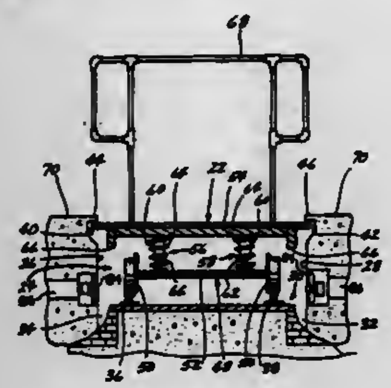

1. A personnel conveyor comprising:
a continuous track comprising in cross section a pair of vertical sidewalls and a bottom wall extending between the lower edges of said sidewalls, each of said sidewalls having at its upper edge a lip flange extending inwardly toward the longitudinal centerline of said track;
a pair of spaced apart parallel rails mounted on said bottom wall and extending longitudinally along said track;
a plurality of cars connected together in end to end relation, each of said cars having supporting wheels in retentive engagement with said rails for rolling along the length thereof, a horizontal platform and frame means connecting said horizontal platform to said supporting wheels for holding said horizontal platform in a position wherein the lateral edges protrude below said lip flanges of said sidewalls in close spaced relation thereto;
a horizontal supporting surface extending from each of said lip flanges in a lateral direction away from the longitudinal centerline of said track,
connecting means connecting each of said cars in end to end relation along the entire length of said continuous track whereby said cars form an endless conveyor;
a flexible flat horizontal support member at each juncture between said cars, said support member being connected to the adjoining ends of one pair of said cars and forming a smooth continuation of the upper horizontal surfaces of said platforms whereby said platforms and said horizontal support members together form a continuous horizontal surface along the entire length of said track; and
power means for moving said cars along said track,
air ventilation means being in communication with said track below said platform for introducing cooling air to said track.

4,299,322
CIGARETTE CONVEYOR SYSTEM
David L. Greenhead, and Frank Heybourn, both of Deptford, England, assignors to Molins Limited, London, England
Filed Nov. 19, 1979, Ser. No. 95,518
Claims priority, application United Kingdom, Nov. 17, 1978, 44925/78
Int. Cl.[3] B65G *1/00*
U.S. Cl. 198—347 **5 Claims**

1. A reservoir for use in a conveyor system for cigarettes or similar rod-like articles, comprising a conveyor having a conveying surface which is flexible about an axis generally transverse to said surface, and a number of guide members having substantially parallel axes and at least two of said guide members having different diameters, said guide members being arranged to guide the conveyor along a spiral path with said conveying surface lying in a substantially-constant plane which is substantially perpendicular to said axis, said path

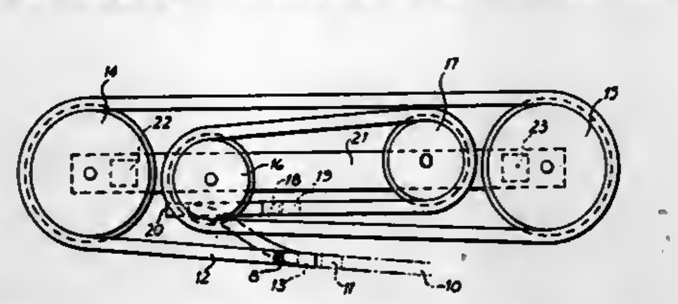

including a loop or partial loop lying within a wider loop or partial loop and means for reversibly driving said conveyor.

4,299,323
HELICAL STORAGE AND CONVEYING UNIT
Richard L. Koch, Mt. Clemens, and Walter H. VanDeberg, Berkley, both of Mich., assignors to F. Jos. Lamb Company, Warren, Mich.
Filed Nov. 8, 1979, Ser. No. 92,477
Int. Cl.[3] B65G *25/00, 13/02*
U.S. Cl. 198—774 **7 Claims**

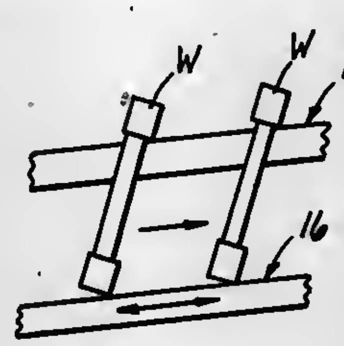

1. A helical storage and conveying unit comprising means forming a first upright support having a helical guideway extending vertically thereon about the central vertical axis of the support, means forming a second upright support having a helical guideway extending vertically thereon about the central vertical axis of the second support, said axes being coincident, the convolutions of said two guideways being vertically aligned, inclined in parallel relation and alternately spaced apart vertically a predetermined distance, means for imparting rotary oscillatory movement to one of said supports about said central vertical axis and for simultaneously vertically reciprocating said one support relative to the other such that the guideway on said one support is moved in a helical path substantially parallel to the guideway on the other support and said vertical spacing between vertically adjacent sections of the two guideways remains substantially constant.

4,299,324
FOLDING BEVERAGE CAN CONTAINER
Robert E. Dickens, 910 Bridgestone, Rochester, Mich. 48063
Filed Oct. 22, 1979, Ser. No. 87,038
Int. Cl.[3] B65D *5/36, 5/46, 33/06, 30/22*
U.S. Cl. 206—170 **5 Claims**

1. A compartmented container for returnable beverage cans comprising:
a plurality of spaced apart, parallel upright walls with a pair of opposed outside edges and a bottom edge;
a first pair of opposed side walls joining the spaced apart upright walls at the outside edges;
a planar bottom wall;
a first and second compartment including a first end wall and a first upright wall spaced from and parallel to the first end wall, the opposed side walls comprising a first side wall and a second side wall, the first side wall and second side wall interconnected to the end wall and the first upright wall and extending past the first upright wall a

distance to a first and second side wall inner edge, the first and second side walls comprising the only means for forming side walls for said second compartment and extending to a third compartment, a first bottom wall having side edges spaced in from the first and second side walls interconnected to the first end wall and the first upright wall extending past the first upright wall a distance to a first bottom wall inner edge, transverse fold lines formed along the first bottom wall between the first upright wall and the first end wall and between the first upright wall and the first bottom wall inner edge, upright fold lines formed in the first and second side walls between the first end wall and the first upright wall and between the first upright wall and the first and second side wall inner edges;
said third compartment including second and third spaced apart parallel vertical walls, third and fourth side walls extending between the second and third upright walls integral therewith, a second bottom wall with side edges spaced in from the third and fourth side walls extending between the second and third upright walls and integral therewith, upright fold lines formed in the third and

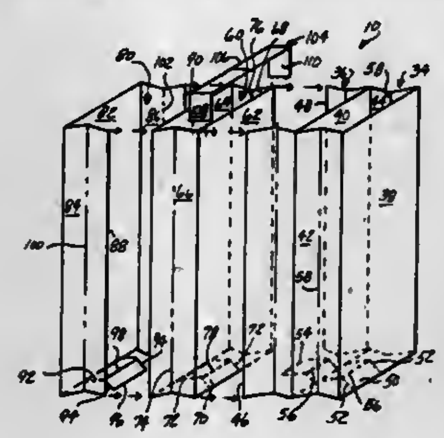

fourth side walls and a transverse fold line formed in the second bottom wall between the second and third upright walls, wherein the third and fourth side walls and the second bottom wall are foldable along their fold lines to allow the second and third upright walls to abut in a folded condition;
a fourth compartment comprising a second end wall, a fifth and sixth side wall integral with the second end wall terminating at a fifth and sixth side wall inner edge respectively, a third bottom wall having side edges spaced in from the fifth and sixth side walls integral with the second end wall terminating at a third bottom wall inner edge, a transverse fold line formed in the third bottom wall, a vertical fold line formed in the fifth and sixth side walls;
the first bottom wall inner edge bonded to the second bottom wall, the first and second side wall inner edges bonded to the third and fourth side walls respectively, the fifth and sixth side wall inner edges bonded to the third and fourth side walls respectively, the third bottom wall inner edge bonded to the second bottom wall; and
wherein the bottom walls and side walls fold along their fold lines to collapse the container.

4,299,325
DOCUMENT DETECTOR AND COLLECTOR
Brian M. Quinton, Basingstoke, England; Emanuel R. Quinci, Dix Hills, N.Y., and Henry Harrison, deceased, late of Locust Valley, N.Y. by Dorothy Harrison, administratrix, assignors to Halm Industries Co., Inc., Glen Head, N.Y. and De La Rue Giori S.A., Lausanne, Switzerland
Continuation-in-part of Ser. No. 846,594, Oct. 28, 1977. This application Nov. 15, 1979, Ser. No. 94,446
Int. Cl.[3] B07C *5/34*
U.S. Cl. 209—553 **2 Claims**

1. Document processing means comprising,
a chain with pushers for guiding a plurality of documents along a path with predetermined positive registration at high speed,
means mounted along said path for detecting identifiable documents,
first vacuum lifting means mounted above said chain,
second vacuum lifting means mounted above said first vacuum lifting means in operative contact with said first vacuum means,
receiving means mounted downstream from said second vacuum lifting means to receive said identifiable documents,
valve means connected to said detecting means and said first

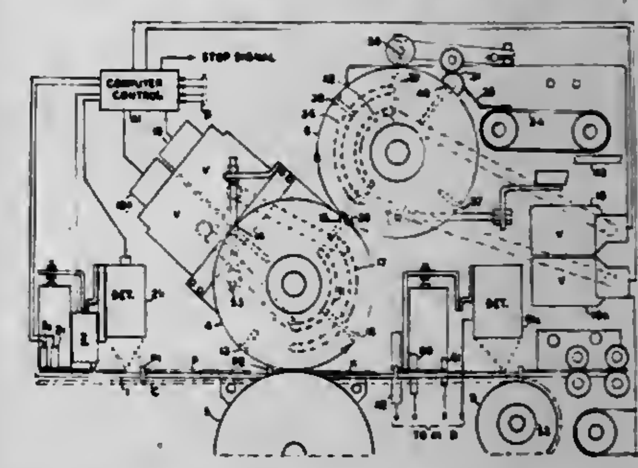

and second vacuum lifting means to connect vacuum to said first and second vacuum lifting means to remove said identifiable documents upwardly and feed said removed documents to said receiving means while registration is maintained by said chain of the documents which are not removed, said vacuum means being moved at high speed,
and means to synchronize the document guiding chain speed and the peripheral speed of the first and second vacuum lifting means,
the first vacuum lifting means comprising,
a first wheel having four vacuum ports and
a first valve plate having inner and outer arcuate slots for connecting vacuum to alternate ports.

4,299,326
WEIGHT SORTING MEMORY CIRCUIT
Bryan D. Ulch, Saugus, Calif., assignor to FMC Corporation, Chicago, Ill.
Filed Nov. 5, 1979, Ser. No. 91,322
Int. Cl.[3] B07C *5/28*
U.S. Cl. 209—564 **9 Claims**

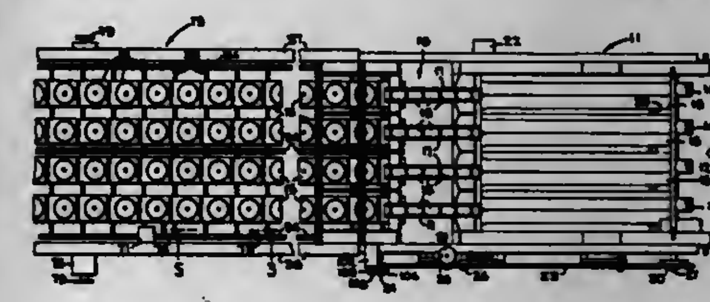

1. In combination with apparatus for sorting articles in accordance with a plurality of predetermined physical characteristic ranges wherein a conveyor is provided for transporting the articles from a first point where the characteristic is measured to a plurality of second points each corresponding to one of the predetermined ranges where the articles are removed from the conveyor in response to an appropriate signal transmitted thereto, the improvement comprising
a memory segment assigned to each one of said plurality of second points,
a predetermined number of memory locations in each said memory segments dependent upon the distance along the conveyor from the first point to the corresponding one of the plurality of second points, said memory locations

operating to receive and store digital data indicative of the physical characteristic range assigned to the corresponding second point,
means associated with each memory segment for indexing each of said memory locations in sequence,
means for testing the data at each indexed memory location for stored digital data indicative of the measured physical characteristic,
means for synchronizing said means for indexing with the conveyor movement,
means for outputting the stored data to the one of the second points corresponding to the indexed memory location when digital data indicative of the physical characteristic is stored therein, whereby articles having physical characteristics in the one of said plurality of predetermined ranges assigned thererto are removed at the corresponding second point, and means for measuring the distance between the first point and the corresponding one of the plurality of second points in terms of conveyor length and for altering said predetermined number of memory locations when the measured conveyor length changes by more than a predetermined distance.

4,299,327
PLACEMAT RACK
William R. Thauer, Centerville, Mass., assignor to General Housewares Corp., Hyannis, Mass.
Filed Dec. 10, 1979, Ser. No. 101,451
Int. Cl.³ A47F *5/01*
U.S. Cl. 211—186 **2 Claims**

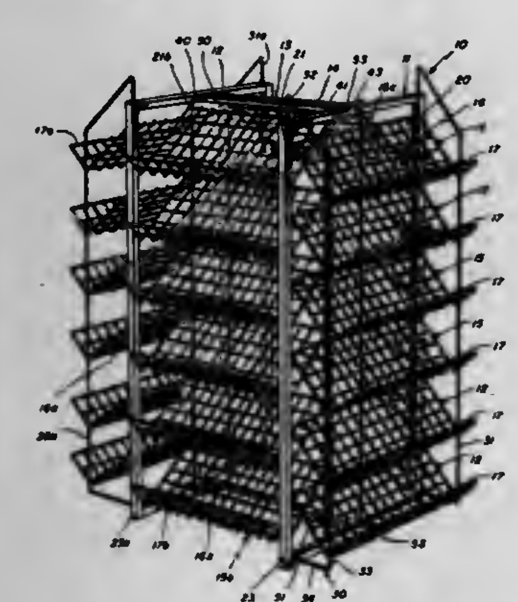

1. A placemat rack for maximizing esthetically pleasing display of a large number of placemats in a minimized floor area,
said rack comprising a first wire section defining a series of placemat shelves for holding a placemat in extended unfolded position for viewing along a first facing plane,
each of said shelves being arranged at an angle to a vertical axis of said rack and slanting downward from the back to the front of said first section with the shelves being stacked in a vertical row and providing a plurality of side to side extending display area each having a side to side length of at least 16 inches and a front to back width of at least 10 inches,
an upwardly extending lip at an outer portion of each of said shelves for supporting edges of said placemats when stacked on said shelves,
and a second wire section carrying placemat shelves connected with said first section and providing for placemat display and viewing along a second facing plane different from said first plane,
said first and second wire sections defining an outer perimeter within which substantially all of said area is covered by placemats when viewed from the top of said rack,
said placemat shelves of said second section being arranged at an angle to a vertical axis of said rack and slant downwardly from the back to the front of the second section with the shelves being stacked in a vertical row and providing a plurality of side to side extending display areas each having a side to side length of at least 16 inches and a front to back width of at least 10 inches with an upwardly extending lip and outer portion of each of said shelves supporting edges of said placemats when stacked on said shelves,
said second wire section and said first wire section each having a mounting frame and being in back to back spaced apart relationship with each other,
and third and fourth wire sections each having shelf arrangements identical to said shelf arrangements of said first and second wire sections with said third and fourth wire sections lying in back to back relationship with each other and spanning substantially the entire space between said spaced apart first and second sections to provide four viewing planes about the periphery of said placemat rack,
a plurality of said shelves being mounted in a cantilever manner to leave lip ends thereof substantially free,
said first and second sections each having side mounting rods extending from upper to lower portions of said section for mounting of display advertising materials,
said first and second sections each being provided with channel frames located in planes parallel to each other, and spanning cross pieces mounting said third and fourth sections with the cross pieces extending substantially perpendicular to said first and second section frames.

4,299,328
TAMPERPROOF BOTTLE CLOSURE CAP
Charles S. Ochs, Lancaster, and Carl E. Koontz, Thornville, both of Ohio, assignors to Anchor Hocking Corporation, Lancaster, Ohio
Filed Mar. 26, 1980, Ser. No. 134,173
Int. Cl.³ B65D *49/12, 41/34*
U.S. Cl. 215—252 **17 Claims**

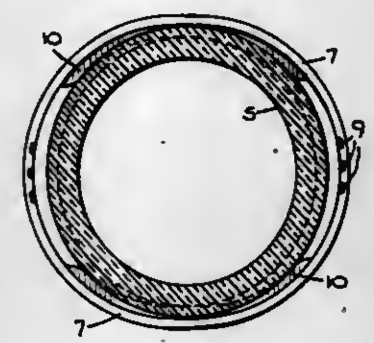

1. A unitary molded plastic closure cap for sealing a container having a threaded neck and a bead below said threads comprising the combination of:
a cover and a depending threaded skirt;
a sealing means;
a circular tamper indicating band releasably attached to the bottom of the skirt by spaced frangible bridge means; and
lug means on said band for engaging said bead during cap removal;
said lug means and said frangible bridge means being circumferentially spaced from one another for providing reduced attachment between said tamper indicating band and said skirt directly above the lug means compared to the attachment provided elesewhere between said band and said skirt.

4,299,329
EXTRUSION COVER FOR CONTAINERS
Taniachi Keiji, 6-7, Nishi-Koujiya, 2-Chome, Ota-ku, Tokyo, 144, Japan
Filed Jun. 19, 1980, Ser. No. 161,171
Claims priority, application Japan, Jul. 9, 1979, 54/85974
Int. Cl.³ B65D *17/40*
U.S. Cl. 220—276 **2 Claims**

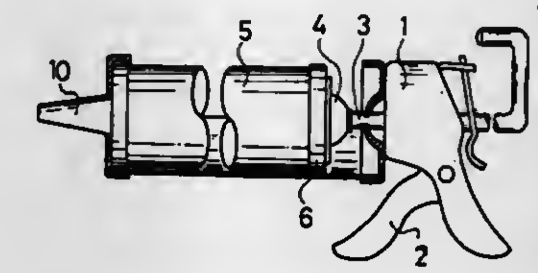

1. A frangible end cover for a cylindrical extrusion gun container, comprising:
(a) a thin, continuous, one-piece, circular plate member adapted to be capped over an open end of a cylindrical extrusion gun container to hermetically seal the contents thereof,
(b) a frustoconical recess (12) formed in a central portion of said plate member and having a tapered sidewall (13),
(c) a circular, weakened tear line (11) defined in said plate member proximate and just radially outwardly of said sidewall, said tear line not extending through said plate member, and
(d) a plurality of spaced, stress concentrating projections (14) extending radially into said recess towards a center thereof from said sidewall, each projection having an end portion bearing against a planar base of said recess,
(e) whereby a portion of said plate member within said tear line may be easily separated by the engagement of a circular plate (19) of an extrusion gun piston with the sloping sidewalls of said projections and the application of axial pressure by said plate.

4,299,330
CONTAINER CLOSURE DEVICE
John Walter, Evergreen Park, Ill., assignor to The Continental Group, Inc., Stamford, Conn.
Filed Oct. 3, 1979, Ser. No. 81,593
Int. Cl.³ B65D *41/04*
U.S. Cl. 220—288 **7 Claims**

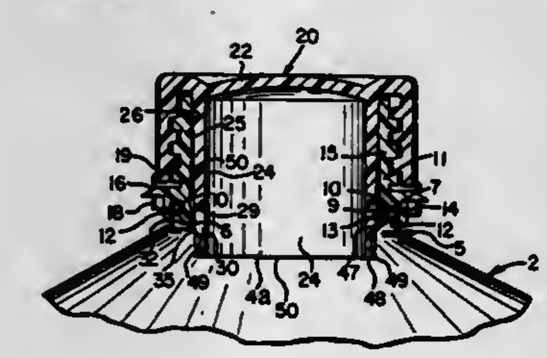

1. A cap and neck assembly of thermoplastic material, the neck of said assembly comprising a pair of interdigitated spiral threads having leading ends terminating in a common location on the periphery of said neck and offset upwardly from the remaining threads and a cap having a pair of threads arranged to engage respective threads on said neck, said threads on said cap having leading end portions offset circumferentially from each other.

4,299,331
AUTOMATIC LOCKING DEVICE FOR THE LID-OPENING LEVER OF A PRESSURE-COOKER
Amalia Bertola, Via Privata Villa Ada No. 30, Omegna, Novara, Italy
Filed Mar. 20, 1980, Ser. No. 131,912
Claims priority, application Italy, Mar. 22, 1979, 21160/79[U]
Int. Cl.³ B65D *85/38*
U.S. Cl. 220—316 **7 Claims**

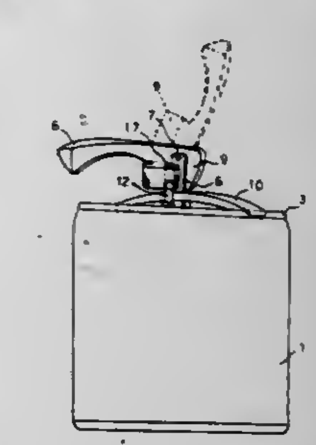

1. An automatic locking device for pressure-cooker lids designed to prevent the opening of the latter when there is internal pressure, the pressure-cooker being of the type comprising a cylindrical container having a circular sealing seat along the edge of a top opening, and a lid designed to seal the container from inside, against the circular seat, the lid being provided with a supporting crossbar the ends of which rest on the edge of the container opening, and with a lid-closing lever having a portion pivoted to the lid and capable of moving between a first, lifted or opening position and a second, lowered or closing position, said lever having a cam-shaped portion acting against the crossbar in one of the first and the second positions and being positionable so that the crossbar causes the peripheral edge of the lid to press against the circular sealing seat, a locking pin provided in said lid, and responsive to pressure in the container for movement from a lowered or disengaged position to a lifted position, said lever being provided with an engaging portion engageable by said locking pin in its lifted position, said engaging portion being provided in the form of a lateral protrusion having an opening for receiving the pin in its lifted position, the pin being separated from the lateral protrusion due to the action of its own weight when the pressure in the container is reduced.

4,299,332
PRESSURE VESSEL SEAL
Raymond E. Pechacek, Houston, Tex., assignor to Hahn & Clay, Houston, Tex.
Continuation-in-part of Ser. No. 13,963, Feb. 22, 1979, abandoned. This application Aug. 6, 1979, Ser. No. 63,825
Int. Cl.³ F16J *15/06;* **B65D** *53/02*
U.S. Cl. 220—378 **19 Claims**

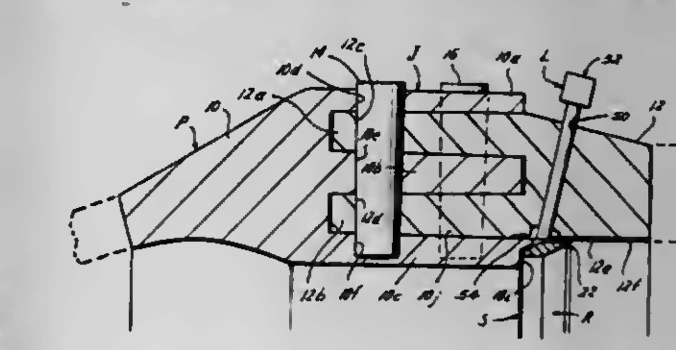

1. A pressure vessel seal for sealing a pressure vessel joint of a pressure vessel having high internal pressures or temperatures therein causing strain in the pressure vessel joint, the pressure vessel seal for preventing fluid migration between an

interior wall and an interior surface of the pressure vessel joint, comprising:
an annular seal ring;
coating means with said annular seal ring for engaging the pressure vessel for effecting a sealable relation therebetween when the pressure vessel joint strains under the high pressures or temperatures encountered within the pressure vessel;
said annular seal ring having:
a first outer annular surface adapted to be disposed adjacent the interior wall of the pressure vessel joint;
a second outer annular surface formed adjoining said first outer annular surface and adapted to be disposed adjacent the interior surface of the pressure vessel joint;
coating reservoir means formed with said first and second outer annular surfaces adjacent the respective outer extremities thereof for receiving said coating means therein for permitting said coating means to sealably engage the pressure vessel joint during the high internal pressures or temperatures while storing said coating means for enhanced spring back of said coating means under varying pressure conditions; and,
said first and second outer annular surfaces are formed having undercut portions between said coating reservoir means and said outer extremities thereof for receiving coating means to enhance a sealing relation between said annular seal ring and the pressure vessel joint.

4,299,333
DISPENSER FOR CIGARETTE LIGHTERS
Thomas E. Welsch, 2216 Maple La., North Saint Paul, Minn. 55109
Filed Apr. 24, 1979, Ser. No. 32,863
Int. Cl.³ G07F *11/20*
U.S. Cl. 221—1 **4 Claims**

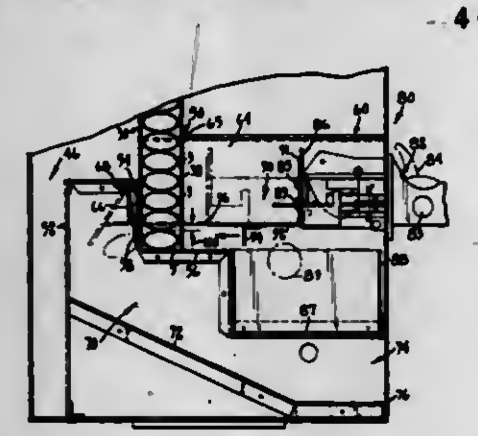

2. A dispenser for use in dispensing a plurality of oval elongated elements one by one, which comprises:
(a) a substantially enclosed housing;
(b) a vertically elongated magazine carried in the housing for receiving a vertical column of oval elements therein, wherein the magazine has a discharge opening at its lower end through which the lowermost element in the column will be dipsensed;
(c) a gate contained inside the housing for closing the discharge opening in the magazine to retain the lowermost element therein, wherein the gate is biased into its position for closing the discharge opening; and
(d) means for dispensing the lowermost element from the magazine, wherein the dispensing means includes a pusher which is shaped to open the gate before the lowermost element is pushed out of the magazine, wherein the pusher includes means for elevating and supporting the column of the lighters above the lowermost lighter before the lowermost lighter is engaged by the pusher in order to be dispensed.

4,299,334
ANTI-THEFT DELIVERY MODULE
Douglas B. Weatherly, Conway, Ark., assignor to Polyvend Inc., Conway, Ark.
Filed Aug. 20, 1979, Ser. No. 68,217
Int. Cl.³ G07F *11/36*
U.S. Cl. 221—1 **19 Claims**

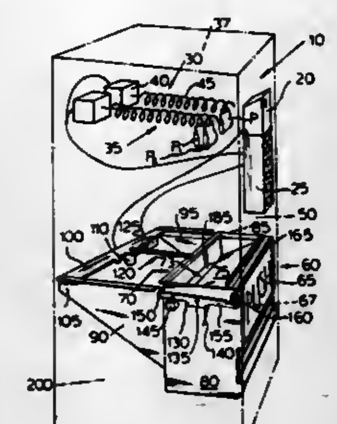

1. In a vending machine having a product dispensing mechanism an improvement comprising:
means for collecting products improperly removed from the product dispensing mechanism, including a slidably mounted, shaped chute with an open lower region which deflects improperly removed products toward said open lower region;
means for storing the collected products and adapted to receive the collected products from said open lower region of said chute when said chute is in a selected position.
9. A method of securely dispensing a single, selected, product from a product dispensing mechanism in a vending machine comprising the steps of:
sensing a valid product selection;
collecting any products previously improperly removed from the product dispensing mechanism;
moving the collected products to a normally closed storage area while simultaneously delivering the selected product to a manually accessible region.

4,299,335
NEWSPAPER VENDOR
Peter Ostermann, Sunnyvale, Calif., assignor to Hickey-Mitchell Company, St. Louis, Mo.
Filed Mar. 28, 1979, Ser. No. 24,546
Int. Cl.³ G07F *11/14*
U.S. Cl. 221—241 **5 Claims**

1. A vendor for newspapers or the like comprising means for containing a stack of newspapers, means for lifting said stack for presentation of successive newspapers of said stack at a vend position, vend control means for controlling withdrawal of a single newspaper through a vend throat during a vend cycle, means for blocking withdrawal of a subsequent newspaper through said throat during said vend cycle, means for causing automatic alignment of newspapers with said throat regardless of non-uniform thicknesses of individual newspapers of said stack, and throat adjusting means for selectively adjusting the dimensions of said throat according to the average thickness of each of said newspapers, to limit said throat dimensions for permitting a single newspaper to pass therethrough, said throat being defined by opposed upper and lower surfaces each extending substantially the width of said newspapers, said throat adjusting means being adapted to selectively alter the spacing between said surfaces, said throat lower surface being constituted by a carriage, said throat adjusting means comprising a height adjusting linkage for selectively positioning said carriage with respect to said upper surface, said adjusting linkage comprising at least one jack screw, a follower threaded on said jack screw for being shifted by rotation of said jack screw, jack links interconnected with said follower and said carriage for altering the height of said carriage upon shifting of said follower, and means for permitting selective rotation of said jack screw.

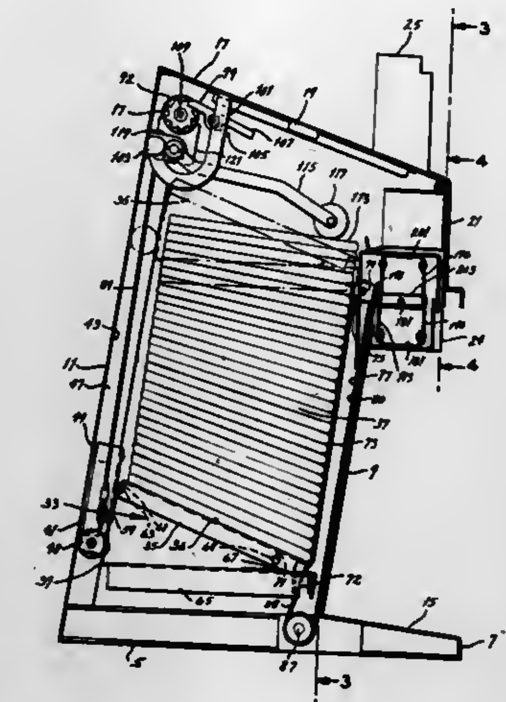

4,299,336
CAULKING GUN WITH FLOW STOPPER
Lewis O. Studer, Summerfield, Ohio, assignor to Melern Development, Canton, Ohio
Filed Mar. 10, 1980, Ser. No. 128,387
Int. Cl.³ B65D *47/38*; B67D *5/46*
U.S. Cl. 222—80 **18 Claims**

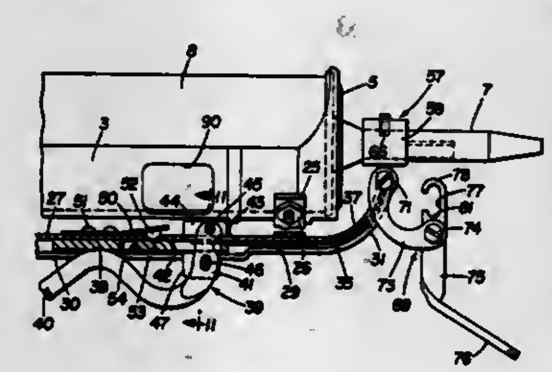

1. An improved caulking gun construction of the type having a frame, a plunger, a handle and a trigger mechanism for advancing the plunger forwardly for urging caulking material outwardly through a spout of a tube of caulking material mounted on the frame, and in which the spout is formed of a severable material, wherein the improvement includes:
(a) guide means mounted on the frame;
(b) blade means movably mounted on the guide means and engageable with the spout of the tube of caulking material and movable between a flow-blocking position and an open position, said blade means being adapted to cut through a side of the spout and abut a far side of said spout to block the flow of caulking material from the spout when the blade means is in the flow-blocking position; and
(c) lever means operatively engaged with the blade means to move said blade means between a flow-blocking position and an open position.

4,299,337
PULSED SYRINGE FOR USE WITH ELECTRON-SPIN-RESONANCE SPECTROMETERS AND THE LIKE
Günter Lassmann; Bernd Ebert, and Norbert Klimes, all of Berlin, German Democratic Rep., assignors to Akademie der Wissenschaften der DDR, Berlin, German Democratic Rep.
Filed Feb. 28, 1979, Ser. No. 15,779
Claims priority, application German Democratic Rep., Mar. 2, 1978, 203936
Int. Cl.³ B67D *5/44*
U.S. Cl. 222—135 **5 Claims**

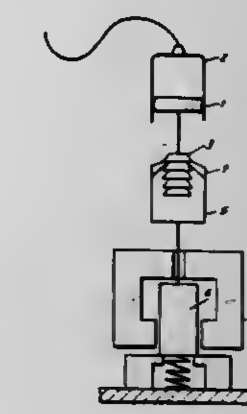

1. A pulsed-flow apparatus for mixing quantities of two liquids in preparation for further processing, comprising means defining a mixing chamber; a pair of housings chambers being adapted to contain a different liquid; conduit means connecting each of said reservoir chambers with said mixing chamber; a piston in each housing and movable into the respective reservoir chamber to expel liquid therefrom via said conduit means, and a piston rod extending from each piston out of the respective housing; a pair of toothed racks each mounted on one of said piston rods for movement therewith; a pair of reciprocable electric armatures each movable back and forth lengthwise of one of said piston rods; a pressure spring on each armature, movable therewith and engaging one of said racks to advance the same and thereby the piston thereof into the associated reservoir chamber when the armature moves in one direction, but to prevent retraction of the rack and piston when the armature moves in the opposite direction; and means for moving the respective armatures in pulsed fashion.

4,299,338
VALVE SYSTEM
Sulekh C. Jain, Schrewsbury, and Paul W. Forkey, Spencer, both of Mass., assignors to Wyman-Gordon Company, Worcester, Mass.
Filed Sep. 27, 1979, Ser. No. 79,263
Int. Cl.³ F16K *31/524*
U.S. Cl. 222—152 **13 Claims**

1. Valve system for joining a storage container to a use device, comprising:
(a) a primary valve, including a ball with a bore and a seal formed of an elastomer engaging the ball, and
(b) a secondary valve including a main body having a passage, a stop movable from a first position closing the

passage to a second position in which the passage is not closed, and a tube coaxial of the passage and movable

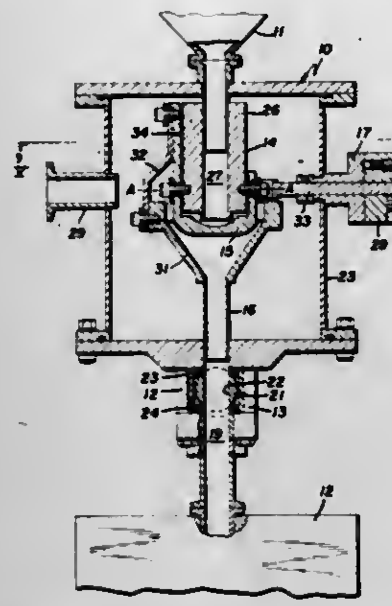

axially from a first position away from the ball to a second position within the bore in the ball.

4,299,339
SAFETY POURING CLOSURE
Maurice Giroux, Tournus; Paul Slvignon, Cuisery, and Claude Susini, Tournus, all of France, assignors to Societe de Moulage de Tournus, Creteil, France
Filed Mar. 31, 1980, Ser. No. 135,518
Claims priority, application France, Jul. 4, 1979, 79 17320
Int. Cl.^{3} B67B *5/00*
U.S. Cl. 222—153 **10 Claims**

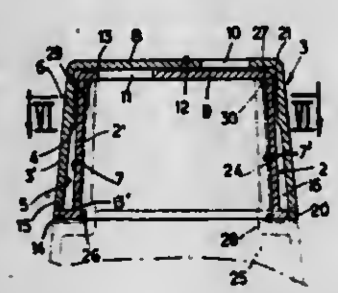

1. A safety pouring closure for a container comprising: a pair of coaxial caps arranged one upon the other and having means for holding them against axial displacement relative to each other, the inner cap having means for securing it to the neck of a container, the top wall of each cap having an off-center orifice, said caps being capable of rotation relative to each other between an open position in which said orifices are aligned and a closed position in which said orifices are angularly off-set, one of said caps having at least one rotation preventing lug engaged in a complementary recess in the other cap when said caps are in the closed position, said lug being capable of being disengaged from said recess by elastic deformation of the side wall of the outer cap disposed in diametrically spaced regions of elastic deformation spaced circumferentially from said lugs, said inner cap having an annular flange pointing outwards and said outer cap having a frusto-conical axial section diverging towards its lower end, the outer diameter of the lower end of the outer cap corresponding substantially to the outer diameter of the flange on the inner cap, said flange having at least one notch engaged in the closed position by a blocking lug formed by an extension of the lower end of the outer cap.

4,299,340
PAINT CAN ATTACHMENT
Bernard J. Hrytzak, P.O. Box 382, Chatham, Ontario, Canada N7M 5K5
Filed Feb. 4, 1980, Ser. No. 118,143
Int. Cl.^{3} B67D *5/58;* **B65D** *25/48*
U.S. Cl. 222—189 **8 Claims**

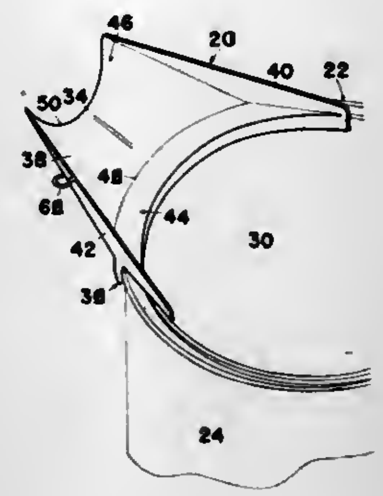

1. An attachment for a paint can and the like of the type which includes a cylindrical side wall having at an upper end thereof, at least an inner peripheral bead which surrounds a circular opening at the top of the can, the attachment being in the form of a one piece plastic moulding comprising:

a trough shaped pouring spout defined by a base portion of a shape which tapers from an inner end to an outer end and which has convergent side edges, and edge portions which extend along said side edges of the base portion and which project upwardly therefrom to form said trough shape, said base portion curving laterally upwardly at least adjacent said outer end from a central area of the base portion towards both of said edge portions and including a curved knife edge at said outer end, defined by the upper surface of said base portion and an undercut surface portion which extends downwardly and inwardly of said base portion upper surface;

a channel section member which depends from said spout base portion at said inner end thereof and which is of an arcuate shape having a curvature conforming to the curvature of said cylindrical side wall of the can and a length corresponding to the width of said spout at its said inner end, terminating even with said side edge portions of the spout, said inner end of the spout base portion being curved in conformity with said channel section member and defining therewith an inner lip over which paint can flow from the can onto said spout when the can is tipped, said side edge portions of the spout extending to the inner end of said spout and terminating at least at opposite ends of said lip so that paint is laterally constrained by said side edge portions immediately as it begins to flow over said lip, said channel section member defining opposite limbs at least an inner one of which has an inwardly directed rib arranged to engage below said inner peripheral bead on the can; said base portion being inclined with respect to said channel section member so that at least an outer portion of its upper surface slopes upwardly when the attachment is fitted to a can, whereby paint will tend to run back into the can.

4,299,341
BICYCLE CARRIER RACK FOR AUTOMOBILES
Jerry T. Copeland, 18 Cherrywood Ave., Dayton, Ohio 45403, and Ernest S. Vince, Dayton, Ohio, assignors to Jerry T. Copeland, Dayton, Ohio
Filed Nov. 13, 1979, Ser. No. 93,602
Int. Cl.^{3} B60R *9/10*
U.S. Cl. 224—42.03 B **4 Claims**

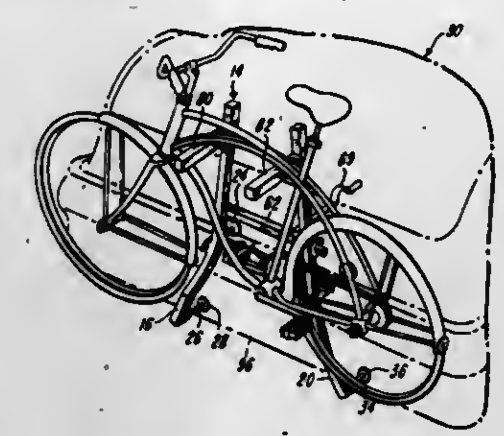

3. A bicycle carrier rack for attachment to an automobile which has a bumper and a trunk compartment which is formed by an upwardly extending panel and a cover engageable with the upper edge of the panel to close the trunk, comprising:

a pair of support members,

means attaching the support members together for movement of the support members to juxtaposition and for movement of the support members to spaced-apart relationship,

engagement means carried by the support members for engagement with the bumper of the automobile and for attachment of the support members to the bumper,

and means for securing the position of the support members with respect to the bumper and including means positionable between the upper edge of the panel of the trunk and retained in such position when the cover is in closed position in engagement with the upper edge of the panel.

4,299,342
COAT HANGER CARRIER
Milton Kessler, 6690 Harrington Ave., Youngstown, Ohio 44512, and Ronald N. Kessler, 1161 Monsell Dr., Youngstown, Ohio 44505
Filed Sep. 17, 1979, Ser. No. 76,191
Int. Cl.^{3} A45C *71/00*
U.S. Cl. 294—149 **11 Claims**

1. A carrier for releasably receiving, retaining and carrying hanger hook portions of a plurality of coat hangers comprising:

(a) a substantially C-shaped member having upper and lower leg portions which overlie each other and which extend substantially in a common plane;

(b) the upper leg portion being of sufficient size relative to the size of one's hand to effectively distribute the load of a plurality of garmet-carrying hangers across the width of one's hand;

(c) the lower leg portion having hanger-hook receiving means for defining an opening which extends within said common plane for releasably receiving and retaining hanger-hook portions of a plurality of coat hangers with such hangers oriented to extend substantially within said common plane; and,

(d) the hanger-hook receiving means defining an elongate opening which, when viewed in cross-section, has a width extending in directions transverse to the common plane which is greater than the height of the opening as measured within the common plane, and having side portions which define opposite ends of the width of the opening, one of the side portions being of lesser length as measured along the length of the opening than the other.

4,299,343
CARBINE SLING AND POUCH
Maxwell G. Atchisson, 6695 Ridgemoore Dr., Doraville, Ga. 30360
Filed Oct. 28, 1980, Ser. No. 201,495
Int. Cl.^{3} F41C *29/00*
U.S. Cl. 224—149 **8 Claims**

1. A sling assembly for attachment to a carbine having a barrel; a stock with a forward end adjacent the barrel of the carbine, and a back end; and an existing barrel band securing the barrel to the forward end of the forward end of the stock, said assembly comprising in combination:

hook means separate from said barrel band and having a substantially flat portion fitting between said barrel band and said stock, so as to be removably clamped to the carbine without requiring modification to the stock;

means attached to said hook means for providing a sling front swivel;

means defining a cuff separate from and fitting snugly around the stock adjacent the butt end;

means attached to the exterior of said cuff for providing a sling rear swivel; and

sling means removably attached to said sling front and rear swivels and extending therebetween.

4,299,344
MOUNT FOR PORTABLE RADIO COMMUNICATION UNIT
Koji Yamashita, and Takashi Oyamada, both of Tokyo, Japan, assignors to Nippon Electric Co., Ltd., Tokyo, Japan
Filed Jun. 16, 1980, Ser. No. 159,858
Claims priority, application Japan, Jun. 28, 1979, 54-88984[U]
Int. Cl.^{3} A45F *5/02*
U.S. Cl. 224—242 **6 Claims**

1. A combination of a portable unit including a housing having longitudinal guide grooves on opposing sides thereof, and a step portion formed in a part of at least one of said guide grooves and having a width that is wider than said guide grooves; and a mount for said portable unit comprising: an integral means having a back plate, side plates, guide plates formed longitudinally along edges of said side plates for slidably engaging said guide grooves, respectively, a notch portion

formed in a part of one of said guide plates; and a latch means secured on the outside of one of said plates for engaging said

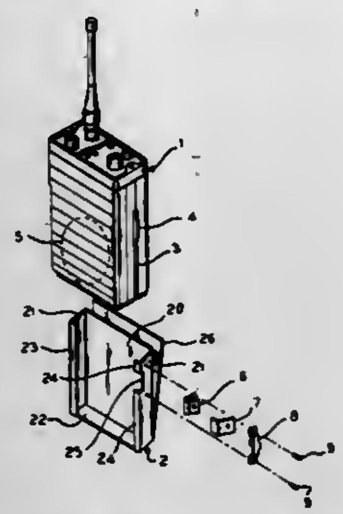

step portion and fixing said portable unit when said portable unit is completely received with said mount.

4,299,345
BALL HOLDER AND DISPENSER
Joseph E. Lanzl, 259 Gardner Ave., South Orange, N.J. 07079
Filed Sep. 12, 1980, Ser. No. 186,703
Int. Cl.³ A47F *1/08*
U.S. Cl. 224—252 **10 Claims**

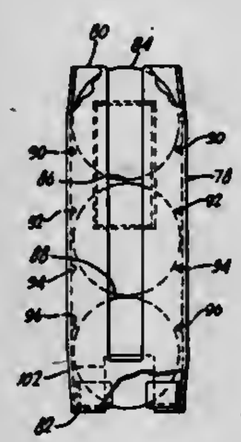

1. A ball holder and dispenser comprising a substantially right angle cylindrical housing, one end of said housing being open, the other end of said housing having a notch communicating thereto, said notch extending along a portion of the length of said housing parallel to the longitudinal axis thereof, a pair of arcuately shaped plates, one end of each of said pair of plates being secured to the interior of said housing at a point adjacent said open end thereof, said pair of arcuately shaped plates extending inwardly a greater distance towards the center of said housing than a portion of said housing located adjacent said open end thereof, at least one protrusion. said at least one protrusion secured to the interior of said housing, said at least one protrusion configured to releasably retain a ball at at least two preferred locations within said housing, means to manually release said ball from engagement with said at least one protrusion, means to removeably secure said housing to a portion of an article of clothing of user thereof.

4,299,346
AUTOMOBILE LUGGAGE RACK
Frederick A. Helm, Detroit, Mich., assignor to Auto Trends, Inc., Detroit, Mich.
Filed Oct. 4, 1979, Ser. No. 81,673
Int. Cl.³ B60R *9/04*
U.S. Cl. 224—325 **15 Claims**

1. A rack assembly for automobile deck lids and the like comprising

a pair of identical rear corner supports having laterally projecting opposed first tongues and each further having a pair of second tongues projecting forwardly and rearwardly on a line beneath said first tongues,

a pair of identical front corner supports having laterally projecting opposed third tongues and each further having a pair of fourth tongues projecting forwardly and rearwardly on a line coplanar with said third tongues,

a tubular rear rail extending between and received over said opposed first tongues,

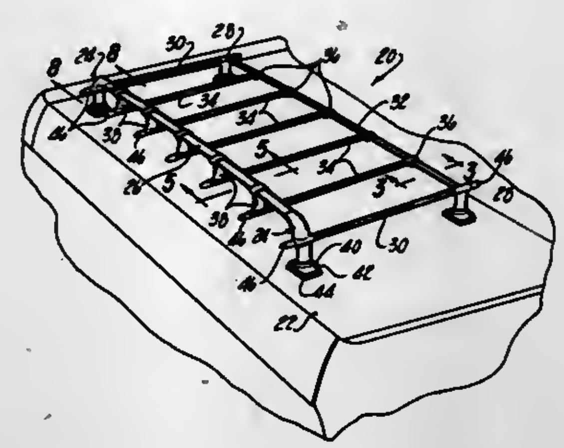

a tubular front rail extending between and received over said opposed third tongues,

tubular side rails extending between and received over opposed ones of said second and fourth tongues in a plane with said front rail beneath said rear rail,

means for mounting said front and rear corner supports to a deck lid, and

decorative cover means received over ones of said second and fourth tongues not received in said side rails.

4,299,347
DEVICE FOR REMOVAL OF CASTING DEADHEAD BY HYDRAULIC WEDGE
Jean-Paul Rougier, Lanester, France, assignor to Societe Bretonne de Fonderie et de Mecanique (S.B.F.M.), Lanester, France
Filed Sep. 5, 1979, Ser. No. 72,694
Claims priority, application France, Apr. 4, 1979, 79 08498
Int. Cl.³ B26F *3/00*
U.S. Cl. 225—97 **1 Claim**

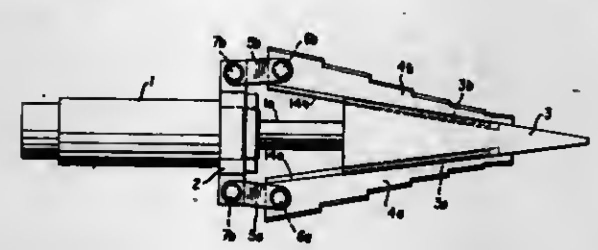

1. An apparatus for separating a casting piece from a casting deadhead, said apparatus comprising:

a hydraulic screw jack having a body and a piston;

support means transverse to an end of said body;

a wedge mounted on the distal end of said piston;

a pair of jaws sliding against said wedge, one end of each of said jaws connected to said support means on said body of said jack through intermediate links wherein the sliding surface of each of said jaws includes at least one dovetail support and the sliding surfaces of said wedge include corresponding longitudinal hollows, said dovetail supports sliding in said hollows; and

means for detaching said jaws from said links;

whereby the sliding of said jaws against said wedge causes their immediate separation.

4,299,348
METHOD OF MAKING A GAME RACKET
Katsumi Fukumoto, Yokohama, Japan, assignor to Mansei Kogyo Kabushiki Kaisha, Saitama, Japan
Division of Ser. No. 930,802, Aug. 3, 1978, abandoned. This application Jan. 23, 1980, Ser. No. 114,583
Claims priority, application Japan, Aug. 26, 1977, 52/115151[U]
Int. Cl.³ B21D *39/00;* **B23K** *31/02*
U.S. Cl. 228—144 **6 Claims**

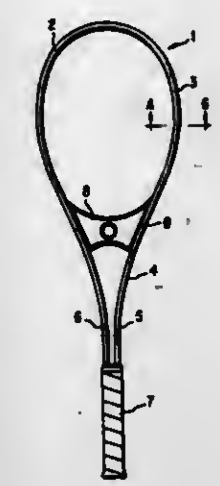

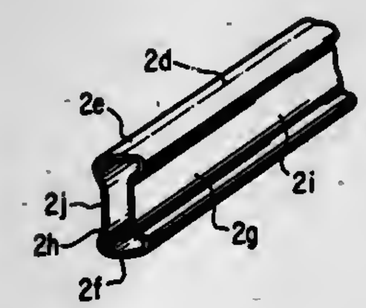

1. A method of making a frame strip for a game racket having a generally oval head, a throat, a handle portion and a grip at the end of said handle portion, comprising the steps of:

forming a first circular hollow tube by welding together the opposed edges of a plate-like strip of titanium material;

drawing said first circular hollow tube to form a second circular hollow tube of reduced diameter;

further drawing said second circular hollow tube into a bone-shaped frame strip with a pair of arcuate sections connected by spaced web sections, in such a manner as said weld lies longitudinally on and along one of said arcuate sections;

providing said frame strip with a vickers hardness in the range of 150 and 220; and

bending said frame strip into an oval shape to form said generally oval head of the racket.

4,299,349
TWO-PIECE CONTAINERS MADE FROM FILLED THERMOPLASTIC SHEET MATERIAL
Morton Gilden, Baltimore, Md., assignor to Maryland Cup Corporation, Owings Mills, Md.
Filed May 10, 1977, Ser. No. 795,618
Int. Cl.³ B65D *3/06, 8/22*
U.S. Cl. 229—1.5 B **11 Claims**

1. A heat sealed two-piece container comprising:

a sidewall blank of polyolefin sheet material including dispersed inorganic filler on the order of 30% to 50% by weight of the sheet material;

said sidewall blank having a lapped heat sealed side seam;

a bottom blank of said polyolefin sheet material inserted in one end of said sidewall blank and having an annular mating surface adjacent an interior surface of said sidewall blank;

said sidewall blank being deformed to engage an annular portion of its said interior surface with said annular mating surface of said bottom blank and heat sealed thereto;

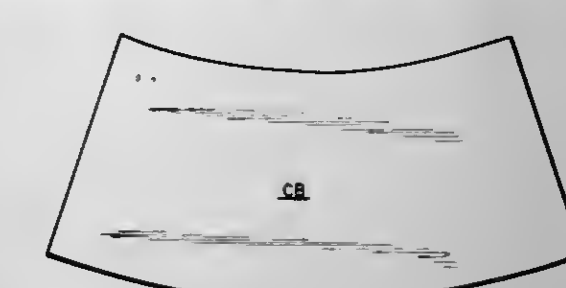

wherein said heat sealed side seam is formed from a plurality of aligned adjacent heat softened discrete areas formed on opposed lapped surfaces of said sidewall blank and pressed into fused cohesion along the length of said sidewall.

4,299,350
COMPOSITE CONTAINER INCLUDING A REVERSELY CURLED BODY MEMBER
Stephen E. Woerz, Florissant, Mo., assignor to Boise Cascade Corporation, Boise, Id.
Filed Nov. 16, 1979, Ser. No. 95,528
Int. Cl.³ B65D *3/04, 5/04*
U.S. Cl. 229—5.5 **12 Claims**

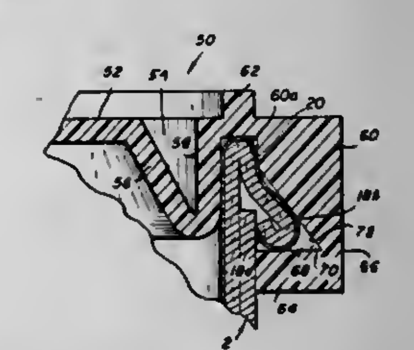

1. A composite container, comprising

a vertically arranged tubular fibrous body member the upper end portion of which is relieved on its outer surface to a diameter less than the outer diameter of said body member, said relieved portion being reversely curled outwardly to a position extending concentrically about said body member, the upper extremity of said reversely curled portion being radially compressed inwardly at least partially within the relieved area to define at the lower end of said reversely curled portion a radially outwardly extending annular locking projection, whereby said locking projection defines means for fastening a closure member to said body member.

4,299,351
SIX-CELL PARTITION
Jeffrey M. Gardner, Wheaton, Ill., assignor to Container Corporation of America, Chicago, Ill.
Filed Dec. 18, 1980, Ser. No. 217,801
Int. Cl.³ B65D *5/48*
U.S. Cl. 229—42 **2 Claims**

1. An internal partition, formed of a unitary, generally rectangular blank of foldable paperboard, for forming six cells within an outer container or wrapper, comprising:

(a) first, second and third sections of substantially similar overall dimensions foldably joined to each other with portions of each section disposed in face-to-face relation;

(b) said first section including:

(i) a center panel;

(ii) a pair of opposed end panels foldably joined to opposed side edges of said center panel and extending normal thereto;

(c) each of said second and third sections including:

(i) a center panel;
(ii) a pair of intermediate panels foldably joined to opposed side edges of said center panel and extending normal thereto;
(iii) a pair of outer panels foldably joined to outer side

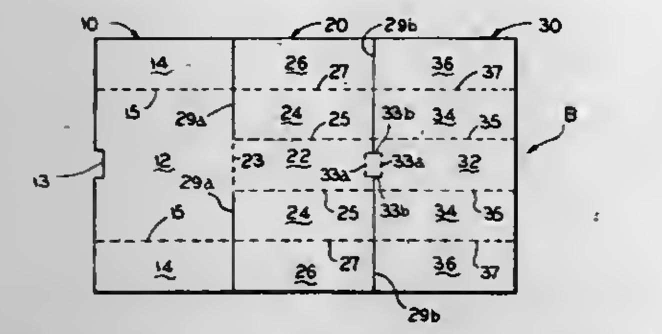

edges of said intermediate panels and extending outwardly therefrom and normal thereto in parallel relation with said first section center panel.
(d) said center and outer panels of each of said second and third sections having a combined width substantially equal to that of said first section center panel.

4,299,352
CENTRIFUGE APPARATUS
John W. Erickson, Huntington Beach, Calif., assignor to Kobe, Inc., Commerce, Calif.
Filed Mar. 23, 1979, Ser. No. 23,204
Int. Cl.³ B04B *1/00*
U.S. Cl. 233—3 **6 Claims**

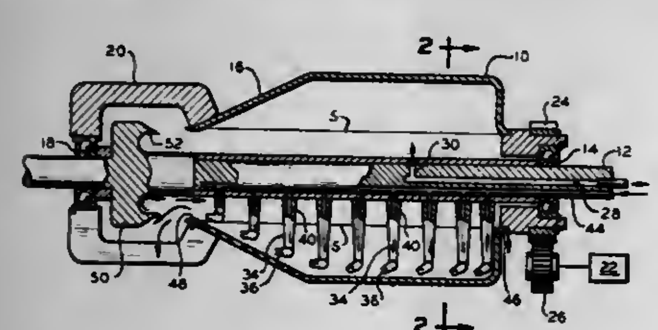

1. A centrifuge apparatus for separating solids from a solid-liquid slurry comprising: a rotatable housing having a concentric outer wall and inlet means for the solid-liquid slurry to be treated; separate outlet means in said housing for the solid fraction and the liquid fraction of the slurry after separation; the outlet means for solids being axially spaced relative to the inlet means for the solid-liquid slurry; means for rotating said housing to effect a concentrated zone of solids adjacent the inner surface of said outer wall of said housing; and pressurized fluid directing means for moving the concentrated solids axially along said outer wall to said solid outlet means of said housing, said pressurized fluid directing means being the primary means for axially moving the concentrated solids.

4,299,353
DRIVE FOR A CONTINUOUSLY OPERATING SCREW EJECTION CENTRIFUGAL SEPARATOR
Paul Bruning, and Alfons Monkenbusch, both of Oelde, Fed. Rep. of Germany, assignors to Westfalia Separator AG, Oelde, Fed. Rep. of Germany
Filed Mar. 19, 1979, Ser. No. 21,856
Claims priority, application Fed. Rep. of Germany, Mar. 18, 1978, 2811887
Int. Cl.³ B04B *1/20*
U.S. Cl. 233—7 **5 Claims**

1. In a continuously operating screw ejection centrifugal separator comprising a drum for holding material to be centrifuged and a screw in the drum for advancing separated material toward one end of the drum for the discharge thereof from the drum, an epicyclic gear train operatively connecting the drum and the screw for rotating both the drum and the screw, and a drive means for driving the epicyclic gear train, the improvement which comprises a second epicyclic gear train

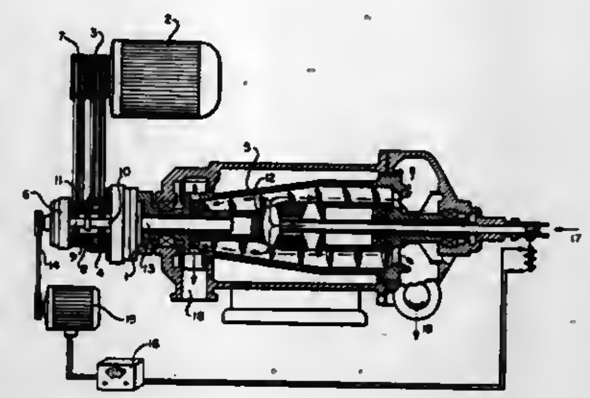

associated with the first-mentioned epicyclic gear train, the second epicyclic gear train having a drive shaft operatively connected with a control means for measuring torque between the drum and the screw and control of the rotation of the drum and the screw.

4,299,354
MIXING VALVES
Keith H. Ketley, Birmingham, England, assignor to Akerman & Jeavons (Birmingham) Ltd., Birmingham, England
Filed Aug. 13, 1980, Ser. No. 178,072
Claims priority, application United Kingdom, Oct. 31, 1979, 37806/79
Int. Cl.³ G05D *23/13*
U.S. Cl. 230—12 A **7 Claims**

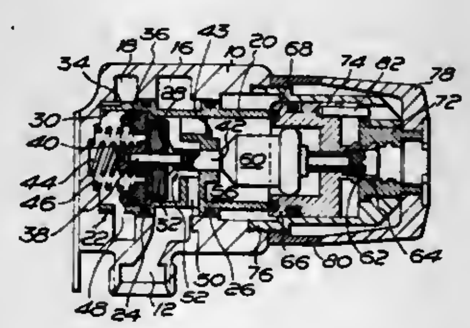

1. In a thermally operated mixing valve, a single control knob; a mixing chamber; a control chamber; a thermally responsive control member accommodated at least partly in said mixing chamber; means for positively shutting off the flow of mixed liquid from said mixing chamber when the valve is closed; a slidably mounted spring loaded abutment ring; and a valve member arranged to control the flow of hot liquid and cold liquid to said mixing chamber, said valve member being constituted by a "jumper" element movable in opposite directions in said control chamber to restrict or cut off the flow of hot or cold liquid respectively to said mixing chamber, the valve member abutting against said spring loaded annular abutment ring to positively shut off the flow of hot liquid to said mixing chamber when the valve is closed, the arrangement being such that when the valve is opened and the annular abutment ring reaches the limit of its travel, the "jumper" element constituting the valve member moves away from the abutment ring and hot liquid is able to flow to the mixing chamber around the outside of said "jumper" element.

4,299,355
APPARATUS FOR ATOMIZING MEDICAMENTS
Taisto Häkkinen, Kaarlonkatu 25, 13210 Hämeenlinna 21, Finland
Filed Jan. 3, 1980, Ser. No. 111,071
Claims priority, application Finland, Jan. 5, 1979, 790039
Int. Cl.³ B05B *7/30*
U.S. Cl. 239—338 **12 Claims**

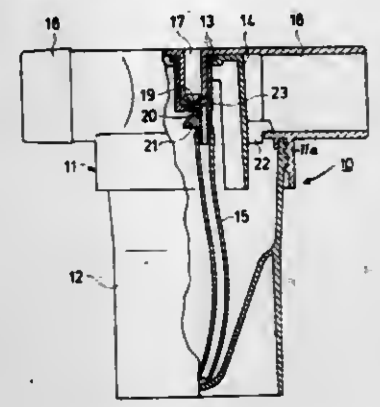

1. Apparatus for atomizing liquid medicaments comprising:
a hollow body member defining a pair of open ended connecting passages branching therefrom;
a container member removably coupled to said body member for containing a liquid medicament;
a separate nozzle member detachably connected directly to said body member defining an interior space therewithin and adapted to be interconnected to an external source of pressure, said nozzle member having a nozzle aperture and a connecting port, the latter being connectable to one end of a suction tube whose other end extends into said container member; and
a separate fixing member detachably connected to said body member and separate nozzle member for detachably fixing the latter to said body member, said fixing member including a skirt portion which surrounds said nozzle member and functions as a splash guard for preventing access of oversized liquid drops into a connecting passage of the body member.

4,299,356
SPRAY NOZZLE FOR COKE OVEN GAS-COLLECTING SYSTEM
Carl-Heinz Struck, Bochum, and Ralf Schumacher, Hagen, both of Fed. Rep. of Germany, assignors to Dr. C. Otto & Comp. G.m.b.H., Bochum, Fed. Rep. of Germany
Filed May 8, 1980, Ser. No. 147,706
Claims priority, application Fed. Rep. of Germany, May 19, 1979, 2920326
Int. Cl.³ B05B *1/02, 1/14*; C10B *27/06*
U.S. Cl. 239—558 **11 Claims**

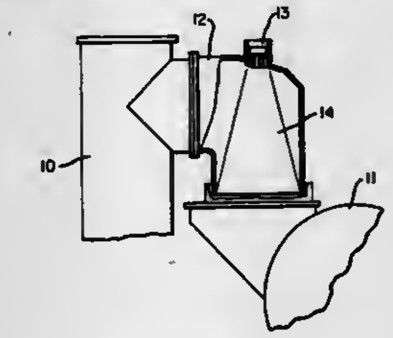

1. A liquid-spraying multi-orificed nozzle adapted to be fitted into the elbow interconnecting the ascension pipe and main of a coke oven, comprising a generally cup-shaped element having a cylindrical side wall and a bottom wall, and nozzle orifices in said bottom wall, said orifices being frustoconical in configuration throughout their entire lengths from one side of the bottom wall to the other and being wider at their exit ends than at their entrance ends, the group of nozzle orifices being characterized in producing streams of liquid which completely cover the elbow cross section only when they reach the transition of the elbow to the coke oven main.

4,299,357
CENTERING PLATE FOR SUPPORTING A YARN CARRIER TUBE
Gert Munker, Wachtendonk, Fed. Rep. of Germany, assignor to Palitex Project Company GmbH, Krefeld, Fed. Rep. of Germany
Continuation of Ser. No. 58,727, Jul. 18, 1979, abandoned. This application Mar. 31, 1980, Ser. No. 135,516
Claims priority, application Fed. Rep. of Germany, Jul. 24, 1978, 2832444
Int. Cl.³ B65H *54/54, 65/00*
U.S. Cl. 242—18 DD **6 Claims**

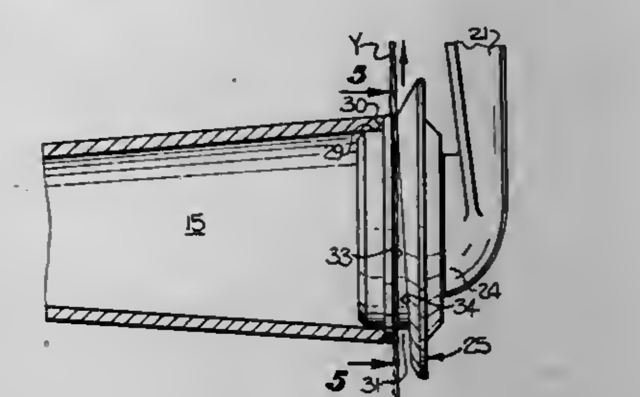

1. In a yarn take-up assembly including, in combination, a pair of opposing rotatably mounted centering plates and a yarn carrier tube positioned therebetween and supported for rotation for winding a yarn thereon, the improvement wherein one of said centering plates is of an improved construction for providing reliable automatic or manual securement of a yarn end during a thread-up operation, said improved centering plate comprising a hub extending axially into and supporting one end portion of said carrier tube and an adjoining larger diameter circumferential flange positioned in engagement with the end surface of the carrier tube for limiting axial movement thereof, and including a circumferential yarn securement channel located adjacent to said flange and defined by a pair of opposing circumferentially extending surfaces positioned for wedging and securing a yarn therebetween, with one of said surfaces lying in a plane perpendicular to the axis of the centering plate and comprising a perpendicularly extending face of said flange, and the other one of said surfaces of said channel lying in a plane oblique to the axis of the centering plate to thereby provide a narrowing cross-sectional area in said channel in the direction of rotation of the centering plate for wedging and securing a yarn therein and wherein said flange is of an outside diameter corresponding substantially to the outside diameter of said carrier tube to permit a smooth transfer of the yarn from said yarn securement channel to said carrier tube when the yarn is initially wound onto the carrier tube.

4,299,358
METHOD AND APPARATUS FOR THE AUTOMATIC SIDEWISE INSERTION OF CORES IN WINDING MACHINES
Hartmut Dropczynski, Dormagen, and Manfred Dienst, Neuss, both of Fed. Rep. of Germany, assignors to Jagenberg-Werke A.G., Düsseldorf, Fed. Rep. of Germany
Filed Jan. 17, 1980, Ser. No. 112,969
Claims priority, application Fed. Rep. of Germany, Jan. 22, 1979, 2902262
Int. Cl.³ B65H *75/02, 19/20*
U.S. Cl. 242—55 **3 Claims**

1. A method for the automatic sidewise pushing of a plural-

ity of cores of any desired length into the wedge formed by the supporting rolls of an arborless winding machine, comprising measuring the length of the first core to be inserted, retracting a retractable pusher into a position just back of the rear end of

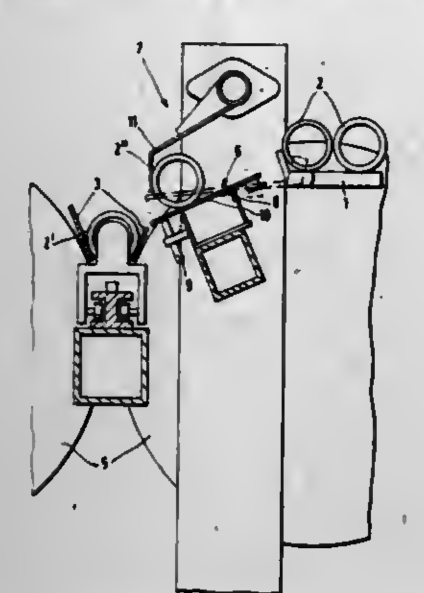

the first core which has been measured and is ready to be transferred, moving the core to a feed track, advancing the pusher to push the core into the wedge, and repeatng the process until all cores have been inserted.

4,299,359
YARN BOBBIN SUPPORT APPARATUS
William E. A. Shelton, Oadby, England, assignor to Alan Shelton Limited, Croft, England
Filed Feb. 29, 1980, Ser. No. 125,908
Claims priority, application United Kingdom, Mar. 22, 1979, 10115/79
Int. Cl.³ B65H *49/02;* **D03J** *5/08*
U.S. Cl. 242—131 **7 Claims**

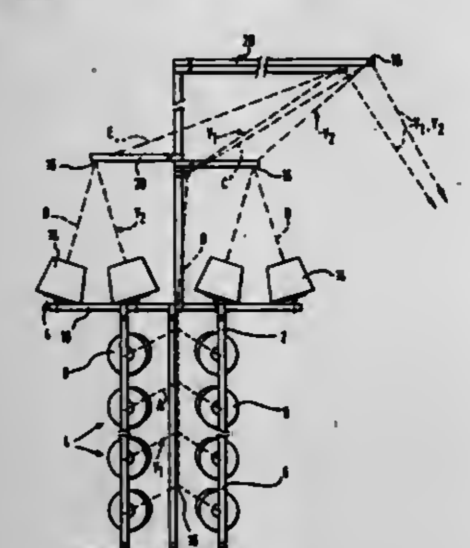

1. Yarn bobbin support apparatus for supporting bobbins feeding yarn to a textile machine, comprising a frame assembly a plurality of bobbin support stations arranged on said assembly, means to support at least one bobbin in a selected orientation at each of said stations, said plurality of stations comprising a first group of said stations in which bobbins are supported in a horizontal or near-horizontal orientations and a second group of stations in which bobbins are supported in a vertical or near vertical orientation, yarn guides disposed in association with each of said groups of said stations to regulate directional changes in a path for yarn leaving a bobbin at each of said stations, the number of said yarn guides provided in the path from each station in the first group of said stations being at least one more than the number of yarn guides provided in the path from each station in the second group of said stations, thereby ensuring that the yarns from the first group of said stations take paths of greater circuitousness than yarns from the second group of said stations.

4,299,360
BEAMRIDER GUIDANCE TECHNIQUE USING DIGITAL FM CODING
Allen C. Layton, Orlando, Fla., assignor to Martin Marietta Corporation, Orlando, Fla.
Filed Jan. 30, 1979, Ser. No. 7,751
Int. Cl.³ F41G *7/26*
U.S. Cl. 244—3.13 **19 Claims**

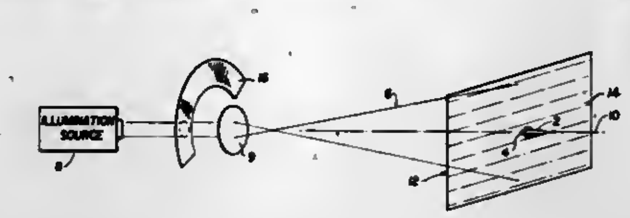

1. An encoding mask for use in conjunction with an electromagnetic beam of radiation for spatially encoding the beam as the mask is moved through the beam at a constant, predetermined speed to thereby facilitate the locating of an object in space, comprising:
a surface having a series of adjacent regions defining bit areas, each of said regions being defined by at least two sets of spaced apart cyclically recurring bands effective to vary a detectable beam parameter, the spacing between adjacent bands of a set being preselected to produce a predetermined beam modulation frequency as the surface is moved through the beam, the spacing between adjacent bands of one set of bands within a bit area being different from the spacing between adjacent bands of at least one other set of bands within the same bit area to thereby spatially modulate the beam at two frequencies, at least, as a bit area is moved through the beam.

4,299,361
PROTECTIVE DEVICE FOR INSTRUMENTS AND LOCKING OF AIRCRAFT CONTROLS
J. Talmadge Webb, Satellite Beach, Fla., assignor to August Betts Yates, Orlando, Fla.
Filed Jan. 26, 1979, Ser. No. 52,148
Int. Cl.³ B64C *13/14*
U.S. Cl. 244—224 **16 Claims**

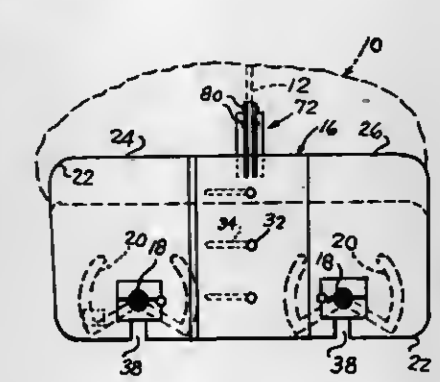

1. In an aircraft having an instrument panel and controls for aileron and elevator flight control surfaces, said controls including at least one column turned by a hand operated yoke and movable axially for controlling the ailerons and elevators, respectively, a protective device for preventing theft of the aircraft instruments from said panel and preventing unauthorized flight removal of the aircraft from a parking area, said device comprising a protective instrument cover in the form of a rigid, substantially planar plate, and means for lockingly mounting said cover in a position immediately adjacent the aircraft instrument panel and to said at least one column in such manner as to prevent unauthorized movements of said column and the ailerons and elevators controlled thereby, said means for lockingly mounting the cover including first and second complementary blocks having complementary semi-cylindrical surfaces which frictionally clamp about the column to prevent its movements, said first block being fixed to said plate and hinge means connecting the second block along one edge to the first block, and means for locking the blocks together comprising an opening through one block aligned with a cavity in the other, said cavity including an inclined cam surface, and a key operated cylindrical lock inserted through said opening into said cavity and having a latch member rotated by the key and bearing against said cam surface to force the two blocks more tightly together.

4,299,362
SUPPORTING STRUCTURE FOR MULTICABLE-CONTAINING ELONGATED TRAY
Bruno Buluschek, Fallanden; Walter Magerli, Trimbach, and Erich Müller, Aarburg, all of Switzerland, assignors to H. Heer & Co., Olten, Switzerland
Filed Feb. 22, 1980, Ser. No. 123,749
Claims priority, application Switzerland, Feb. 26, 1979, 1865/79
Int. Cl.³ F16L *3/00, 3/22;* **H02G** *3/04*
U.S. Cl. 248—49 **17 Claims**

1. A support structure for attaching an elongated cable-supporting tray to a wall or ceiling of a building, the cable-supporting tray including a floor portion which defines a plane therethrough, the support structure comprising
an elongated arm member which is positionable beneath the floor portion of the elongated cable-supporting tray so as to extend generally transversely of the longitudinal dimension thereof, one end of said elongated arm member being connectable to a building wall or ceiling, and
a strut element, one end of said strut element being connected to said elongated arm member near the end thereof connectable to a building wall or ceiling and the opposite end being connected to the floor portion of the supported elongated cable-supporting tray, said strut element being connectable to the floor portion of the supported elongated cable-supporting tray so as to enclose an angle with the elongated arm member in an imaginary plane passing through the strut element and the elongated arm member and which is parallel to said plane passing through the floor portion of the supported elongated cable-supporting tray, said strut being capable of transmitting forces created by the movements of the supported elongated cable-supporting tray along the longitudinal dimension thereof to said elongated arm member at a point near the end thereof connectable to a building wall or ceiling.

4,299,363
CONNECTOR FOR NON-METALLIC SHEATHED CABLE
Arthur E. Datschefski, South Bend, Ind., assignor to Raco, Inc.
Filed Oct. 26, 1979, Ser. No. 88,635
Int. Cl.³ H02G *3/22*
U.S. Cl. 248—56 **9 Claims**

1. A connector for connecting non-metallic sheathed cable to electrical boxes in a knock-out opening thereof, said connector comprising:
an annular body formed from a resiliently flexible material, said body defining a ring shaped portion at one end of same and a collet comprising a plurality of opposed resilient jaws in spaced apart relation about the axis of said body at the other end of same,
said jaws each comprising a finger having a base connected to said body ring shaped portion and a jaw head directed laterally of and toward said axis,
with said jaw heads being disposed substantially transversely of said axis and converging toward said axis in a substantially common plane that is disposed normally of said axis, with said jaw heads being similarly spaced from said body ring shaped portion thereabout,
said jaw heads defining outer sides facing away from said body ring shaped portion and inner sides facing said body ring shaped portion,
said jaw heads at their respective terminal end portions each defining a blunt cable gripping edge, with said edges being directed toward said axis in confronting relation therewith in closely spaced relation thereabout,

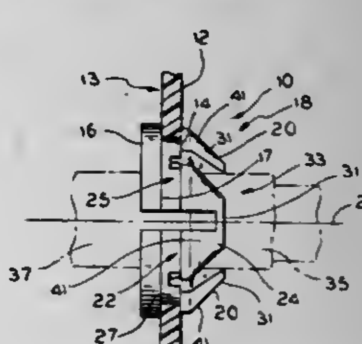

said jaw heads being oriented and spaced about said axis to be cammed away from said axis, when one end of either oval or round non-metallic sheathed cable is passed through said body ring portion and is thrust against said inner sides of same, at random positioning about said axis, to separate said jaws and pass the cable therebetween with said jaw gripping edges disposed in sliding relation to and being resiliently biased against the cable, and draw said jaws, by way of the frictional engagement of their gripping edges with the cable, toward said axis into indented collet type gripping relation with such cable on movement of the cable end in the opposite direction,
said fingers at their said outer sides defining means for snap fit mounting of said body in the box knock-out opening between said ends of said body adjacent said finger bases, with said inner sides of said jaw heads facing outwardly of the box and said heads disposed within the box,
whereby the cable end may be inserted into and through the connector by pressing the cable end against the jaw head inner sides to cam the jaws apart for sliding the cable therebetween, said jaws resiliently seat against the cable, and said jaws oppose withdrawal of same from the connector by being closed against the cable on tendencies of same to move outwardly of the box.

4,299,364
INSULATING MODULE INCLUDING A HEATER ELEMENT SUPPORT
Peter J. Loniello, Watertown, Wis., assignor to General Signal Corporation, Stamford, Conn.
Filed Aug. 7, 1978, Ser. No. 931,757
Int. Cl.³ E21F *17/02*
U.S. Cl. 248—58 **10 Claims**

1. An insulating module including a heating element support, said module comprising:
an insulating body;
a plurality of support rods, one end of each rod being embedded in and anchored to said insulating body and the other

end of each rod extending outwardly from a surface of said insulating body;
a keeper carried by each support rod and shiftable between first and second positions about the extending end of the associated support rod, each of said keepers including fingers extending in opposite directions, generally parallel to said support rod when said keeper is in its first position and transverse to said support rod when said keeper is in its second position; and

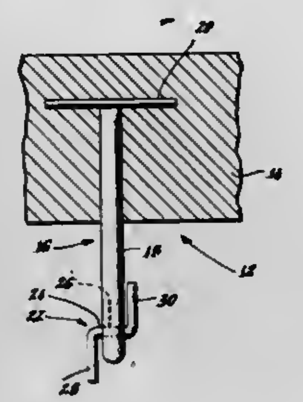

means for mounting said keeper to provide for rotational movement thereof between said two positions, about an axis transverse to said support rod;
said keeper comprising a pin through a transverse hole in said support rod;
said fingers being angled end portions of said pin on either side of said support rod.

4,299,365
LEAF BAG SPREADER AND HOLDER
Walter L. Battle, 220 East 42nd. St., Minneapolis, Minn. 55409
Filed Aug. 10, 1979, Ser. No. 65,637
Int. Cl.³ B65B *67/12;* A45C *7/00*
U.S. Cl. 248—99 **4 Claims**

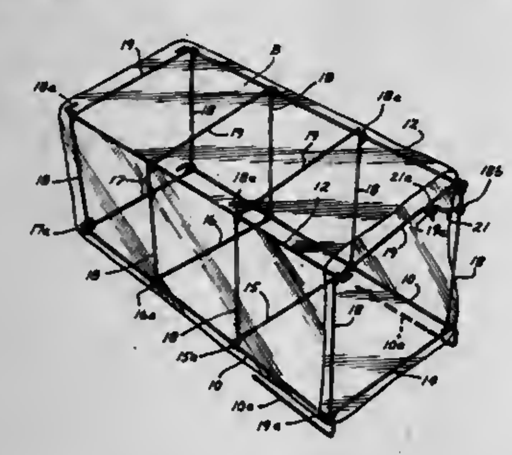

1. An open ended bag-spreading frame structure comprising,
a plurality of longitudinal extending frame members with cross members extended therebetween,
the connections between the longitudinal frame members and the cross members permitting the frame structure to be collapsed into a double thickness frame for compact packaging and storage while permitting the same to be erected into expanded operative position having a generally rectangular cross section and being of substantially the same length as the bag into which it is inserted to hold the bag open,
said connections between the longitudinal and cross frame members being provided with means for maintaining the frame structure in expanded operative position within a flexible bag, and
a pair of skid elements integrally formed with the underlying lower longitudinal frame members in downwardly spaced relation thereto adjacent to the mouth portion of the frame assembly to permit insertion of the bag between the skid elements and the frame and thus maintain the lower portions of the bag in spaced relation above the ground surface with the bag and frame assembly are positioned with the skid elements in ground-engaging orientation.

4,299,366
CAN HOLDER
Karl A. Kurzius, 4246 Eubank, NE., Albuquerque, N. Mex. 87111
Filed Aug. 18, 1980, Ser. No. 179,343
Int. Cl.³ A47J *47/16*
U.S. Cl. 248—145.6 **3 Claims**

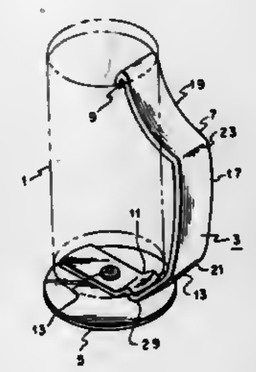

1. A holder for receiving and holding a can having a top and bottom ridge, comprising:
a round base support of diameter approximately at least as large as the diameter of the can to support the can in use,
a single springable handle member carried upon said base support,
said handle being formed of a single rectangular piece of plastic,
a first transverse U-shaped bend in said handle member adjacent a distal end from said base to engage the top ridge of the can,
a second transverse U-shaped bend in said handle member adjacent the base to engage the bottom ridge of the can, whereby said can is received in said holder between said first and second transverse bends,
said handle being arcuately configured along its longitudinal axis to assume a normal configuration in which the first and second transverse bends are separated by a distance less than the height of the can,
said handle being transversely arcuately configured along a substantial portion of its length to add a bias in the handle to urge it to the normal configuration to snugly retain the can received in the holder,
a substantial portion of said handle extending across the base support, said extending portion being flat, free of arcuate biasing configurations.

4,299,367
SHELF BRACKET
F. Kellogg Harlan, 1617 Sprucewood, Rockford, Ill. 61107
Filed Dec. 13, 1979, Ser. No. 103,396
Int. Cl.³ A47G *29/02*
U.S. Cl. 248—235 **5 Claims**

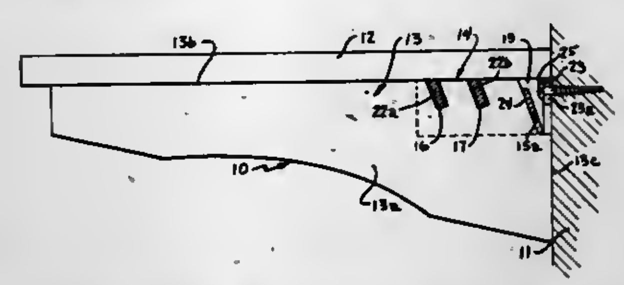

1. A shelf bracket assembly adapted for mounting at the rear end thereof on an upright supporting surface, the shelf bracket assembly including an elongated shelf bracket formed of particle board or wood having spaced side faces and a top shelf supporting surface and a rear abutment surface disposed in a plane perpendicular to the top shelf supporting surface, the shelf bracket member also having a rear notch at the upper rear corner thereof defining a rear recessed surface extending between the spaced side faces and disposed above and offset forwardly from said rear abutment surface, and a forward notch extending downwardly from the top shelf supporting surface at a location forwardly of the rear recessed surface and defining a pair of spaced notch walls extending between the side faces, and a mounting bracket for attaching the shelf bracket to a supporting surface, characterized in that said pair of spaced notch walls are inclined downwardly and rearwardly from said top shelf supporting surface at a preselected acute angle, said mounting bracket comprising a one-piece plastic body open at the top and bottom thereof and including spaced side members and a forward tongue member extending between the side members adjacent the forward end thereof and a rear wall member extending between the side members adjacent the rear end thereof, the tongue member being inclined downwardly and rearwardly from the upper edge of the side members at said preselected acute angle at a location therealong to engage the pair of spaced notch walls when the mounting bracket is assembled on the shelf bracket with the upper edges of the side members substantially coplanar with top shelf supporting surface, the rear wall member being disposed generally perpendicular to the upper edges of side members to have its rear face substantially coplanar with said rear abutment surface when mounting bracket is assembled on the shelf bracket, said rear wall member having an opening therein for receiving a headed fastener to attach the shelf assembly to an upright supporting surface.

4,299,368
INFINITELY ADJUSTABLE BRACKET-STANDARD MOUNTING
Clifford W. Winkler, P.O. Box 561, Rte. 2, Houghton Lake, Mich. 48629
Filed Mar. 19, 1979, Ser. No. 21,657
Int. Cl.³ A47G *29/02*
U.S. Cl. 248—246 **12 Claims**

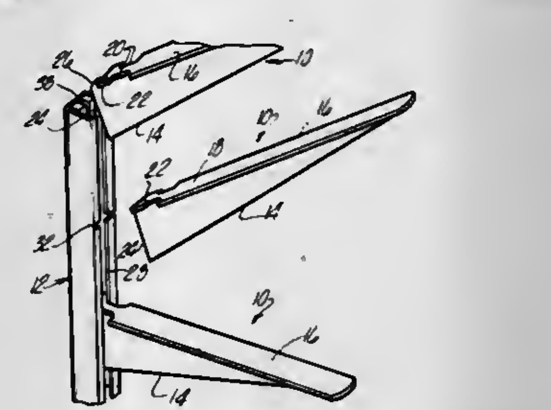

1. A bracket-standard mounting arrangement comprising:
a box channel standard consisting of an elongated member formed in generally box section shape, said standard formed with a slot extending longitudinally along one side thereof to provide an opening into the interior cavity defined by said box section shape;
a bracket including:
a gusset plate dimensioned to be positioned extending into said slot;
a pair of laterally extending ears secured to said gusset plate dimensioned to be received within said box channel standard interior cavity and retain said bracket therein by engagement with said interior cavity wall portions adjacent said slot;
said gusset plate formed with a tail portion configured to have a rear edge surface moved into engagement with a corresponding rear surface in said box channel interior cavity upon positioning said bracket in an installed position extending away from said box channel standard;
frictional engagement means generating substantial frictional forces acting directly between a lateral surface of said tail portion and said box channel standard upon said movement of said bracket into said installed position, whereby said bracket is securely mounted to said box channel standard by frictional engagement forces acting directly between rear and lateral surfaces of said bracket with said interior cavity,
said frictional engagement means comprising track means extending longitudinally within said interior cavity and having at least one surface directed forwardly from the rear of said interior cavity of said bracket standard, and extending longitudinally along said box channel standard and wherein said frictional engagement means urges said forwardly directed surface and a lateral surface of said tail portion of said bracket gusset plate into engagement, whereby said frictional forces are generated therebetween upon movement of said bracket into said installed position,
said frictional engagement means including locating means including said laterally extending ears acting on said bracket gusset plate tail portion to position said tail portion lateral surface within said interior cavity laterally offset from said track means at least one surface, said direction of offset and locating means tending to produce a tilt of said tail portion and a jam condition between said tail portion as said tail portion is moved into engagement with said fowardly extending surface, whereby said jam condition generates said lateral friction forces.

4,299,369
ADJUSTABLE CURTAIN ROD SUPPORT
John M. Colich, Sr., 7412 Calle Cuernavaca Pl., Tucson, Ariz. 85710
Filed Dec. 3, 1979, Ser. No. 99,337
Int. Cl.³ A47M *1/10*
U.S. Cl. 248—263 **7 Claims**

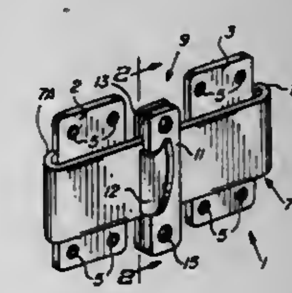

1. A device for supporting curtain rods or shades, said device comprising in combination:
(a) first and second wall plates for attachment to first and second wall surface areas located adjacent to a window;
(b) cross member means having first and second ends rigidly connected to said first and second wall plates, respectively, said cross member means and said first and second wall plate means being composed of a single piece of metal, said cross member means having a flat inner surface and a flat outer surface parallel to the inner surface, wherein said first and second wall plates are parallel to and spaced from said inner surface of said cross member means, said single piece of metal having a first U-shaped fold section connecting said first wall plate to said first end of said cross member means and a second U-shaped fold section connecting said second wall plate to said second end of said cross member section, said first and second wall plates each extending above said cross member means, said first and second wall plates each including a plurality of screw holes located above said cross member means to facilitate attachment of said first and second wall plates to said first and second wall surface areas, respectively,

(c) first slide support means slidably disposed on said cross member means for supporting an end of a curtain rod or shade, said first slide support means including
i. a back plate having a flat surface disposed against the inner surface of said cross member means,
ii. a front plate having a flat surface disposed against the outer surface of said cross member means,
iii. connecting means for connecting said front plate to said back plate to force said back plate and said front plate against the inner and outer surfaces of said cross member means, respectively, and
iv. a support element attached to said front plate for engaging and supporting the end of the curtain rod or shade, wherein said back plate and said front plate each extend above and below said cross member means, said back plate having first and second threaded holes disposed above and below said cross member means, said front plate having first and second holes aligned, respectively, with said first and second threaded holes, said connecting means including a first screw extending through said first hole and said first threaded hole and a second screw extending through said second hole and said threaded hole, respectively, to allow safe, convenient mounting and adjustable positioning of said first slide support means on said cross member means.

4,299,370
REVOLVING FIXTURE FOR SUPPORTING TOOLS
Mario Monticelli, Moncalieri, and Piero Barbero, Turin, both of Italy, assignors to DEA Digital Electronic Automation S.p.A., Turin, Italy
Filed May 8, 1979, Ser. No. 37,130
Claims priority, application Italy, May 9, 1978, 68053 A/78
Int. Cl.³ E04G *3/00*
U.S. Cl. 248—278 **14 Claims**

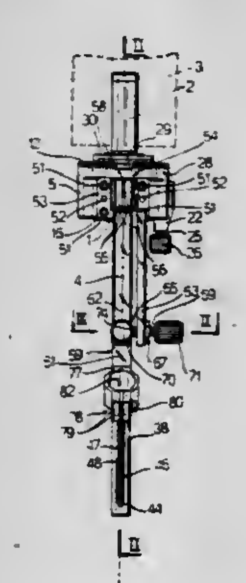

1. A revolving fixture intended to support tools or instruments, comprising first elements for the connection to a carrying structure, and second elements adapted to lock the said tool or instrument and rotatable relative to the said first elements about a main axis, wherein the said fixture comprises means apt to adjust, in a relatively precise, responsive and stable manner, the position of the said tool or instrument with respect to the said main axis, so as to position the tip of the said tool or instrument in such a manner as to make it substantially coincide with a point of the said main axis and thus minimize the deviations of the tip of the tool or instrument from the said main axis during the rotation of the said second elements relative to the said first elements, the said means comprising first and second means for adjusting the substantial coincidence of the tip of the said tool or instrument with the said main axis, in two respective separate stages, the said first means comprising a body, on a portion of the surface of which the said main axis passes, and the said second means comprising two adjustment elements arranged to act on a first portion of the said second elements which supports the said tool or instrument, along two directions orthogonal to one another, so as to move the tip of the said tool or instrument, along directions which are substantially contained in a plane perpendicular to the said main axis.

4,299,371
NECK RING ASSEMBLY
Robert J. Duga, Enfield, Conn., assignor to Emhart Industries, Inc., Hartford, Conn.
Continuation-in-part of Ser. No. 13,413, Feb. 21, 1979, abandoned. This application Aug. 25, 1980, Ser. No. 181,053
Int. Cl.³ B29C *7/00;* **B29F** *1/14*
U.S. Cl. 249—68 **8 Claims**

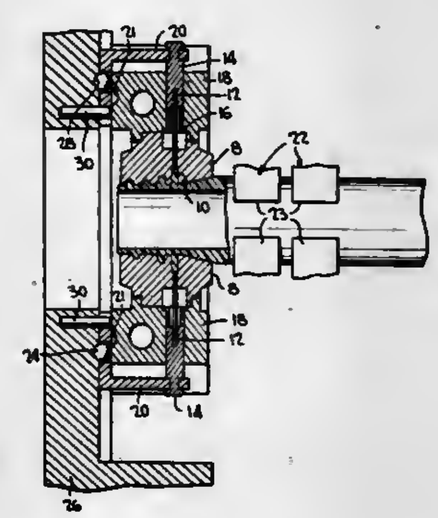

1. A neck ring assembly for use in forming a parison comprising
(a) upper and lower neck ring halves having a finish cavity in each of said halves, a neck ring retainer in contact with said neck ring halves, and a neck ring plate spaced from said neck ring retainer; said neck ring retainer and neck ring plate each having a detent therein;
(b) an ejector pin plate in part movably positioned in said space between said neck ring plate and neck ring retainer, an ejector pin plunger for each of said neck ring halves secured at one end to said ejector pin plate and ejector pins secured at one end of each to each of said ejector pin plungers; and
(c) detent means including traveling means carried by said ejector pin plate communicating between said detent in said neck ring plate and said detent in said neck ring retainer, and stop means for said ejector pin plate;
said ejector pins being in communication at one end through said neck ring halves with said finish cavities of said neck ring halves.

4,299,372
SPRUE GATE FOR INJECTION MOLDING OF PLASTIC ARTICLES
Anthony F. Tomburo, Cranford, and Nicholas W. Kachur, Clark, both of N.J., assignors to Gibson Associates, Inc., Cranford, N.J.
Filed Jul. 29, 1980, Ser. No. 173,390
Int. Cl.³ B29F *1/00*
U.S. Cl. 249—107 **14 Claims**

1. In a multiple-part mold for injection-molding of a plastic product wherein the mold parts have contoured wall-surface elements which in their mold-closed condition define a product-molding cavity and wherein a sprue passage in one of said mold parts communicates with one of said surfaces at a gate restriction of effective sectional area less than that of the sprue passage and having a generally central axis of symmetry, the improvement wherein said gate restriction comprises a plurality of restrictive orifices offset from and in angularly spaced relation to said axis, the combined sectional area of said orifices

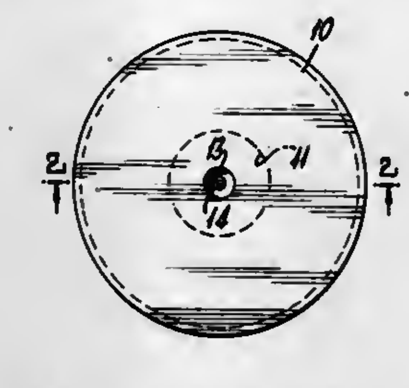

at said one surface being substantially less than that of the sprue passage.

4,299,373
FLUID FLOW CONTROL VALVE
Terrence J. Troyer, Columbus, Ohio, assignor to Ranco Incorporated, Columbus, Ohio
Filed Jan. 28, 1980, Ser. No. 115,738
Int. Cl.³ F16K *31/126, 1/226*
U.S. Cl. 251—58 **3 Claims**

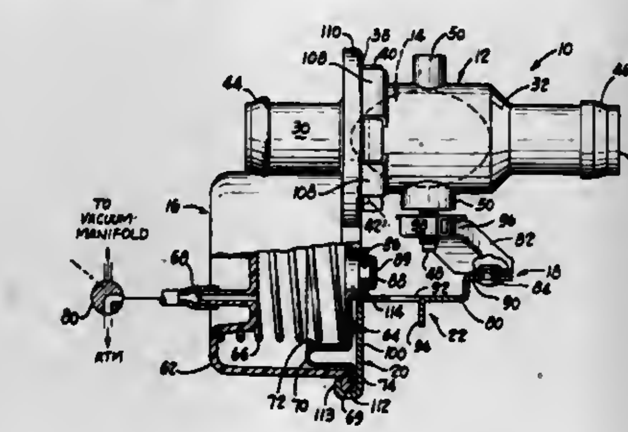

1. An engine coolant flow control valve comprising:
(a) a tubular valve housing defining a coolant flow passage extending therethrough;
(b) a butterfly valve member supported in said valve body for pivotal movement between an open position wherein coolant flows through said body and a closed position wherein coolant flow is blocked, said valve member defining a periphery sealingly engageable with the valve housing when in said closed position, said valve member and said valve body engaging resiliently when said valve member is in the closed position;
(c) a valve actuator comprising an actuator housing and a fluid pressure actuated member supported for movement in said actuator housing;
(d) a structural support housing interconnecting said actuator housing and said valve housing for preventing relative movement therebetween;
(e) an actuating force transmitting linkage connected between said pressure actuated member and said valve member for moving said valve member between said positions; and,
(f) a force limiting means comprising an abutment element carried by said linkage and engageable with one of said housings to limit the force applied to said valve member from said actuator when said valve member is in said closed position, said abutment element located on said linkage relative to said one housing for engaging said one housing after said valve member and said valve housing are resiliently engaged to limit the resilient engagement to a predetermined degree.

4,299,374
SOLENOID VALVE
Minoru Yamanaka, Toyota, Japan, assignor to Sisin Seiki Kabushiki Kaisha, Kariya, Japan
Filed Aug. 9, 1979, Ser. No. 65,163
Claims priority, application Japan, Aug. 25, 1978, 53-116263
Int. Cl.³ F16K *31/06, 27/00*
U.S. Cl. 251—129 **2 Claims**

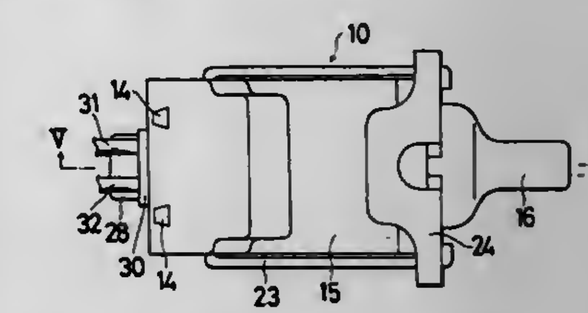

1. A solenoid valve sealing assembly comprising:
a valve housing which comprises synthetic resin and defines a valve chamber;
a magnetic coil wound on a bobbin for generating a magnetic flux;
magnetic valve means supported in said chamber for valve movement by said magnetic flux;
a plurality of terminals which are electrically connected at both ends of said magnetic coil;
lead wires which are electrically connected with said terminals for supplying an electrical signal to said magnetic coil; and
a rubber waterproof member having a large diameter portions and a small diameter portion and a plurality of openings formed therein for providing waterproofing between said valve housing and said lead wires wherein said lead wires are positioned in said plurality of openings formed in said waterproof member, respectively and said waterproof member is positioned in said valve housing by molding of said valve housing, said bobbin having a wall portion and an opening formed therein and said small diameter portion of said waterproof member is positioned in said opening of said bobbin and said large diameter portion of said waterproofing member watertightly contacting said wall portion of said bobbin.

4,299,375
UNDERGROUND PIPE INSTALLING DEVICE
William O. Schosek, P.O. Box 3626, North Fort Myers, Fla. 33903
Filed Oct. 16, 1978, Ser. No. 951,626
Int. Cl.³ E21B *9/00*
U.S. Cl. 254—29 R **10 Claims**

1. A device for installing an underground pipe between two specific spaced apart points defined during the installation operation by an operating trench and a target trench spaced from the operating trench comprising a frame including a longitudinal section having a central portion and transversely extending front and back portions for insertion into the operating trench which is companionately shaped relative to said frame on a somewhat enlarged scale,
means to adjustably mount said frame in the operating trench,
a push rod assembly comprising a plurality of push rod lengths endwisely removably screw threaded together in axial alignment extending longitudinally through said longitudinal frame portion,
reciprocating drive means including a cylinder and piston combination carried in said longitudinal portion of the frame to selectively drive said push rod assembly forwardly and rearwardly relative to said longitudinal portion of the frame,
clutch means connected to said drive means,

manual control means for selective sequential engagement of said clutch means with said push rod assembly in a first position to cause successive lengths of said push rod assembly to be sequentially pushed forwardly through the soil from the operating trench to the target trench, and reversing means associated with the clutch and operable

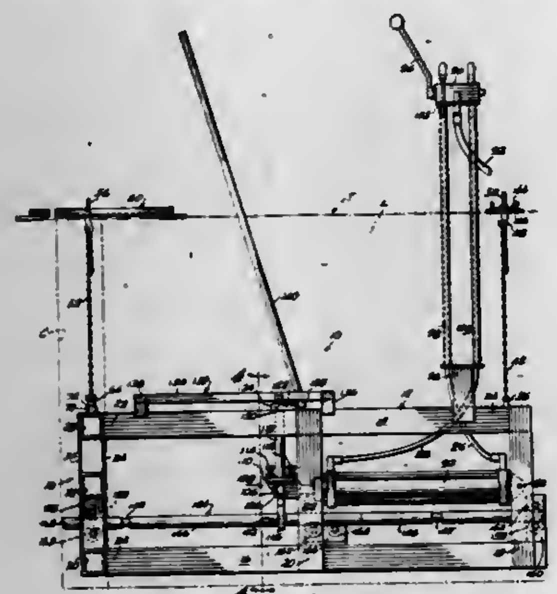

in a second position to cause said push rod assembly to be sequentially pulled rearwardly from the target trench to the operating trench,

a plurality of separately operable screw threaded means to vary the vertical position of the frame in the operating trench and to adjust the horizontal angularity of the frame.

4,299,376

APPARATUS FOR THE SELECTIVE SEPARATION OF NON-FERROMAGNETIC METALS FROM A MIXTURE OF COMMINUTED METALLIC SCRAP

Karl Weiss, Altenberg, Fed. Rep. of Germany, assignor to sma Shredder-Müll Aufbereitung Schrott Maschinen Abbruch GmbH, Nuremberg, Fed. Rep. of Germany

Filed Dec. 10, 1979, Ser. No. 101,677

Claims priority, application Fed. Rep. of Germany, Dec. 21, 1978, 2855239; Apr. 28, 1979, 2917316

Int. Cl.³ F27B *17/00*

U.S. Cl. 266—205 **20 Claims**

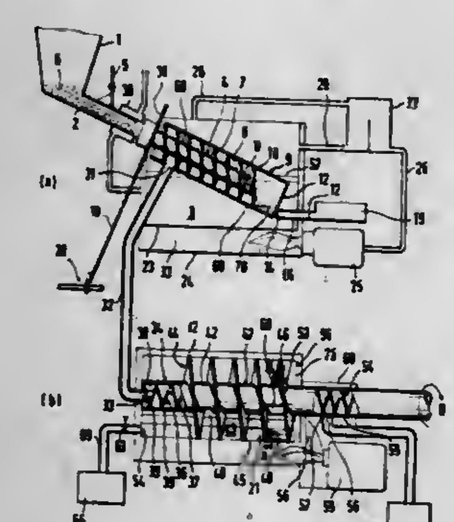

1. Apparatus for the selective separation of nonferromagnetic metals from a mixture of comminuted metallic scrap of approximately uniform particle size comprising a first container for heated bath fluid, means for introducing said mixture into said container and into contact with the bath fluid, said introducing means comprising a feed channel connected at one end thereof to a source of supply of said mixture and at the other end thereof to a first pipe closed at the end thereof remote from its connection to said feed channel, said first pipe having at least one aperture therein adjacent the closed end thereof, said first pipe being positioned so as to extend into said container and allow the admission of bath fluid thereto through said at least one aperture, a screw conveyor for withdrawing from the bath fluid solid mixture constituents remaining after the melting out of a first selected metal from said mixture through said contact with the bath fluid, and means for recovering from said bath the melted out metal first selected for separation.

4,299,377

MANUALLY OPERATED CLAMP EFFORT INTENSIFIER FOR VISE

John O. Lenz, Coon Rapids, Minn., assignor to Kurt Manufacturing Company, Inc., Minneapolis, Minn.

Filed Feb. 14, 1980, Ser. No. 121,381

Int. Cl.³ B23Q *3/02*

U.S. Cl. 269—136 **18 Claims**

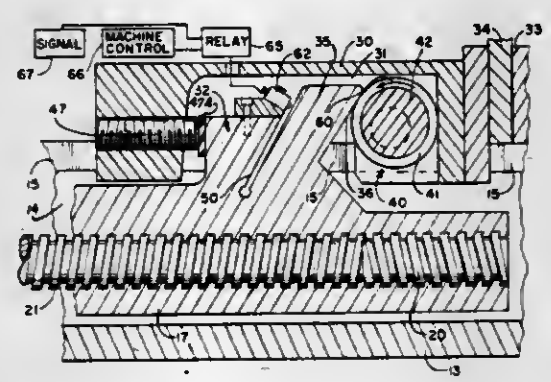

1. A machine vise including a frame having jaw guide rail means, a fixed jaw mounted at one end of said frame, a movable jaw mounted on said rail means and movable toward and away from said fixed jaw, means for actuating said movable jaw toward and away from said fixed jaw comprising a vise actuator screw, a nut mounted for movement along said screw, means to operably couple said nut to said movable jaw comprising actuator means including a rotatable cam shaft having shaft portions rotatably mounted on said movable jaw and an eccentric cam roller means, said nut having a boss portion with a surface extending laterally relative to the rails and which engages the cam roller, and a manual actuator to rotate said cam roller to react against the surface to shift the movable jaw relative to the surface in direction toward the fixed jaw.

4,299,378

APPARATUS FOR SINGULARIZING AND OPENING STACKED FOLDED SHEETS

Hans Müller, Zofingen, Switzerland, assignor to Grapha-Holding AG, Hergiswil, Switzerland

Continuation of Ser. No. 906,783, May 17, 1978, abandoned. This application Feb. 28, 1980, Ser. No. 125,356

Claims priority, application Switzerland, May 30, 1977, 6548/77

Int. Cl.³ B65H *39/02*

U.S. Cl. 270—54 **10 Claims**

1. Apparatus for spreading successive sheets of a series of stacked folded sheets wherein each sheet comprises first and second panels having first marginal portions which are integral with each other and second marginal portions substantially parallel to the first marginal portions and wherein the second marginal portion of the first panel projects beyond the second marginal portion of the second panel, comprising a magazine for a stack of folded sheets; a withdrawing device rotatable about an axis and having means for withdrawing successive sheets from said magazine and for advancing each withdrawn sheet to a predetermined position along an arcuate path having a convex side and concave side and for supporting the sheets from the concave side of said path; opening means including first and second spreading devices respectively having first and

second clamping means moving along predetermined first and second paths for engaging said marginal portions; straightening means for engaging and maintaining the projecting second marginal portion of the first panel of each sheet occupying said predetermined position in said first path so that such projecting second marginal portion can be engaged by said first clamping means, said straightening means being mounted to move between a predetermined operative position in which said straightening means is located at the convex side of said arcuate path and prevents entry of the second marginal portion of

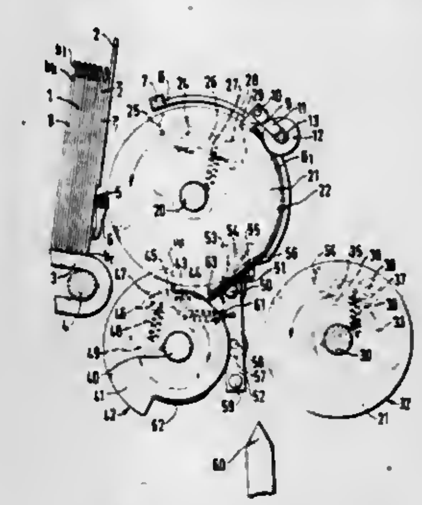

the second panel of a sheet occupying said predetermined position into said second path and a predetermined retracted position in which said straightening means to remote from said arcuate path and provides room for entry of the second marginal portion of the second panel of the sheet in said predetermined position into said second path; and means for moving said straightening means from said operative position to said retracted position upon engagement of the projecting second marginal portion of the first panel of a sheet in said predetermined position by said first clamping means.

4,299,379

MOVING CARRIAGE BUFFER/FEEDER

William C. Preston, Richardson, and Michael W. Still, Dallas, both of Tex., assignors to E-Systems, Inc., Dallas, Tex.

Continuation of Ser. No. 880,018, Feb. 21, 1978, abandoned. This application Feb. 19, 1980, Ser. No. 122,510

Int. Cl.³ B65H *1/02, 1/08, 3/04, 1/30*

U.S. Cl. 271—3.1 **10 Claims**

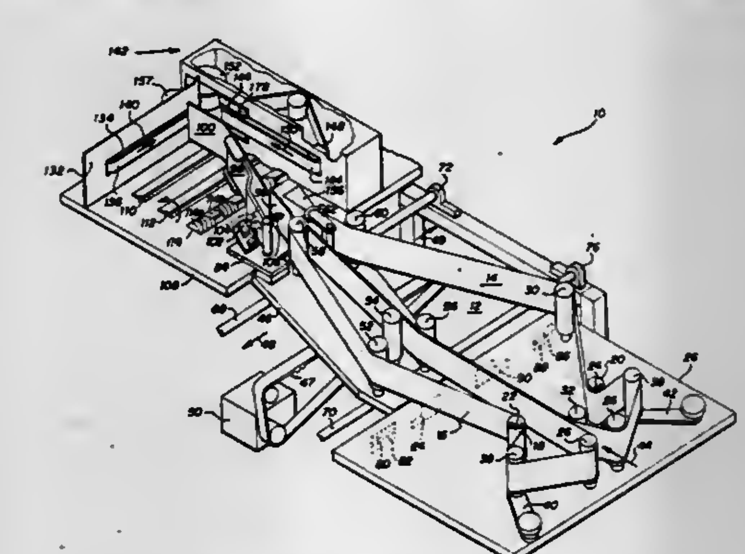

1. A device for transporting and buffering a flow of flat, rectangular articles having a leading edge and a trailing edge opposite the leading edge and a bottom edge extending between the leading and trailing edges, such as letter mail, comprising:

a support frame;

an output feeder positioned on the support frame at the output of a buffer stack for removing articles individually from the stack;

a plurality of parallel rotatable bars supported by said frame with at least one of said bars having screw threaded sections on a cylindrical surface interspaced along its length with polygonal cross sections and at least one of said bars having a polygonal cross section along its length, said bars for supporting and agitating a plurality of the articles collected side by side to form the buffer stack, the articles in the buffer stack transverse to said bars such that the polygonal cross section of the bars engages the bottom edge of the articles to advance the articles in a direction substantially tangential to said bars and said bar with the screw threaded sections thereon further engaging the bottom edge of the articles at a point spaced from the leading edge to move the articles toward said output feeder along the longitudinal axis of the bar;

an edging belt positioned substantially transverse to the movement of the articles by the polygonal cross sections and engaging the leading edge of the articles for advancing the articles in the buffer stack along with the screw threaded sections of said bar toward said output feeder;

a linearly displacable carriage positioned transversely offset from the line-of-travel of the article in the buffer stack and movable parallel to the line of travel;

a conveyor belt assembly having a fixed article input supported by said frame, said conveyor belt assembly extending to and further supported by said carriage for transporting articles from the article input across said carriage in a direction essentially transverse to the line of travel of said carriage;

a pivoting arm supported by said carriage and extending therefrom transverse to the line of travel of the carriage to reach the buffer stack, said pivoting arm including a shoe for directing articles received from said conveyor belt assembly into the buffer stack; and

means for displacing said carriage in response to movement of said pivoting arm to maintain essentially a constant pressure on said shoe against the last article in the buffer stack.

3. A device for transporting and buffering a flow of flat, rectangular articles having a leading edge and a trailing edge opposite the leading edge and a bottom edge extending between the leading and trailing edges, such as letter mail, comprising:

(a) a supporting frame,

(b) at least one rotatable bar supported by said frame and having a noncircular cross section for supporting and advancing in a direction substantially tangential to said bar a plurality of the articles collected side by side in a buffer stack by engaging the bottom edges of the articles, the articles in said buffer stack positioned transverse to said bar,

(c) a rotatable edging bar having alternating first and second segments, said first segments having a screw thread configuration and said second segments having a noncircular cross section, said edging bar positioned adjacent the leading edges of the articles in said buffer stack for agitating the articles in the buffer stack and urging the articles therein toward the output feeder,

(d) a linearly displaceable carriage positioned transversely offset from the line-of-travel of the articles in said buffer stack and movable parallel to said line-of-travel,

(e) a conveyor belt assembly having a fixed article input supported by said frame, said conveyor belt assembly extending to and further supported by said carriage for transporting articles from said article input across said carriage in a direction essentially transverse to the line-of-travel of said carriage,

(f) a pivoting arm supported by said carriage and extending therefrom transverse to the line-of-travel of said carriage to reach said buffer stack, said pivoting arm including a shoe for directing articles received from said conveyor belt assembly into said buffer stack, and

(g) means for displacing said carriage in response to movement of said pivoting arm to maintain essentially a constant pressure of said shoe against the last article in said buffer stack.

4,299,380
SHEET FEED APPARATUS
Masato Ogihara, Sagamihara; Toshihiko Misawa, Kawasaki, and Takaji Sne, Sagamihara, all of Japan, assignors to Ricoh Company, Ltd., Japan
Continuation of Ser. No. 883,511, Mar. 6, 1978, abandoned. This application Jan. 24, 1980, Ser. No. 115,140
Claims priority, application Japan, Mar. 9, 1977, 52-25667
Int. Cl.³ B65H *3/44*
U.S. Cl. 271—9 **11 Claims**

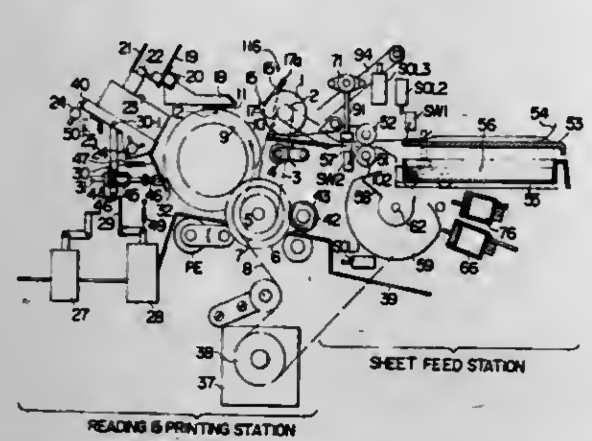

1. In a compact facsimile apparatus having an original/-recording sheet support, means for moving the support, an image readout unit for reading an image to be transmitted from an original on the support, an image forming unit for placing an image to be received onto a recording sheet on the support, and means for moving the image readout and image forming units in unison with respect to the support to respectively read or form an image sheet feed apparatus, comprising only one sheet feed roller operable to transport both originals and recording sheets individually to the original/recording sheet support, an original sheet table for the manual guiding and feeding of original sheets individually to said one sheet feed roller when an image is to be transmitted from an original sheet, a cassette for holding a stack of recording sheets, said original sheet table fixed in a position above said cassette and forming a cover for said cassette and recording sheet feed means operable to feed recording sheets individually from said cassette to said one sheet feed roller when an image is to be received and placed on a recording sheet, said one sheet feed roller being located in a position capable of receiving both original sheets from said original sheet table and recording sheets from said cassette.

4,299,381
SHEET FEEDING APPARATUS
Richard E. Smith, Webster, N.Y., assignor to Xerox Corporation, Stamford, Conn.
Filed Aug. 4, 1980, Ser. No. 174,776
Int. Cl.³ B65H *3/12*
U.S. Cl. 271—96 **3 Claims**

1. A bottom sheet separator-feeder for separating and forwarding sheets seriatim comprising;
a stack tray adapted for supporting a stack of sheets,
vacuum sheet feed means associated with said tray located in a position spaced from the bottom sheet in the stack,
air injection means adapted to provide a layer of air between said tray and the bottom sheet in the stack in between the bottom sheet and the remainder of the sheets in the stack,
single blower means associated with said vacuum feed means and said air injection means to provide negative air pressure for said vacuum feed means and positive air pressure for said air injection means; and,
valve means associated with the inlet and the outlet of said blower means, said valve means being adapted to bleed air into the blower inlet when the air flow to the blower is reduced due to blockage of air through the vacuum sheet feed means upon acquisition of a sheet thereby, said valve

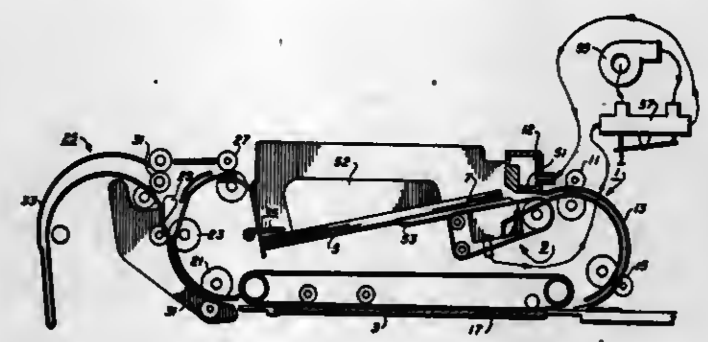

means being adapted to bleed air from the output of said blower to prevent excessive air flow to said air injection means when the air flow through said vacuum sheet feed means to said blower is substantially unrestricted.

4,299,382
SHEET SORTING AND STACKING APPARATUS
Kiyomichi Ichikawa, Kawasaki, Japan, assignor to Canon Kabushiki Kaisha, Tokyo, Japan
Filed Sep. 26, 1979, Ser. No. 79,085
Claims priority, application Japan, Oct. 6, 1978, 53-123411; Oct. 6, 1978, 53-123412
Int. Cl.³ B65H *29/58*
U.S. Cl. 271—287 **3 Claims**

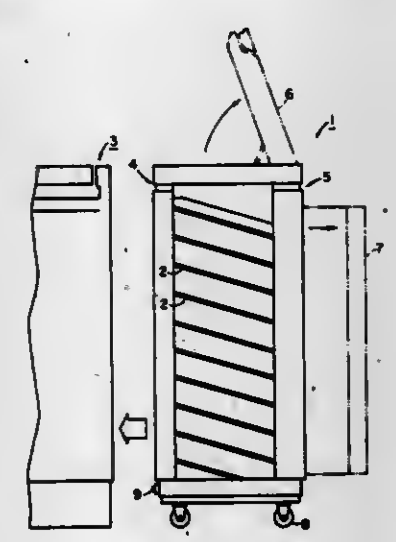

1. A sheet sorting and stacking apparatus for sorting and stacking sheet materials into plural storage positions, comprising:
upper and lower transport means for transporting sheet materials from a sheet entrance to said storage positions;
an auxiliary member pivotable to be released together with one of said upper and lower transport means from the other of said upper and lower transport means so as to provide a widened sheet material transport path;
means for detecting the occurrence of abnormal sheet transportation and releasing said auxiliary member upon the detection; and
means for stopping operation of said upper and lower transport means and allowing one of said upper and lower transport means to function to stack the sheet materials, after said detecting and releasing means detects the occurrence of abnormal sheet transportation and releases said auxiliary member.

4,299,383
TENNIS TRAINING DEVICE
Sueto Yuasa, 5-9-10, Seta, Setagaya-ku, Tokyo, Japan
Filed Nov. 27, 1979, Ser. No. 97,859
Claims priority, application Japan, Nov. 30, 1978, 53-165191[U]
Int. Cl.³ A63B *61/00*
U.S. Cl. 273—29 A **5 Claims**

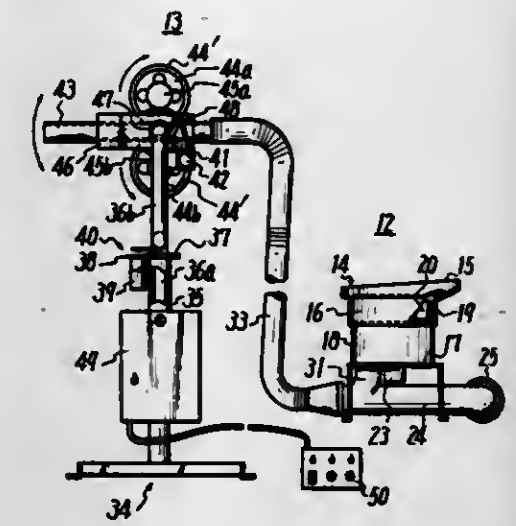

1. A tennis training device, comprising:
(a) ball emitting means for cyclically emitting tennis balls to a player's side;
(b) ball collecting means for collecting tennis balls hit by a player;
(c) control means for controlling horizontal and vertical angles of said ball emitting means;
(d) ball transfer means for transferring said tennis balls from said ball collecting means to said ball emitting means;
(e) ball distributing means located between said ball collecting means and said ball emitting means for feeding the balls one by one to said ball emitting means continuously with a constant time period between contiguous balls; and
(f) said ball distributing means including a ball receiving dish, a drum rotatably located in said dish and having a plurality of bores located on a coaxial circle of said drum for temporarily holding said tennis balls therein from said ball collecting means, a ball retaining cylinder projecting down from a bore in the bottom of said dish, a rotary disc located beneath said ball retaining cylinder and having half as many elliptical bores therein as the number of said bores in said drum, and a supporting base supporting said dish, drum and rotary disc and having an opening which is aligned with said ball retaining cylinder, whereby the tennis balls from said ball collecting means pass through said bores in said drum, the bore in said dish, said ball retaining cylinder, said elliptical bores and the opening of said supporting base to said ball transfer means.

4,299,384
ELECTRICALLY CONDUCTIVE GAME BALL
John A. Van Auken, 16 La Gorce Cir., Miami Beach, Fla. 33141
Continuation-in-part of Ser. No. 683,283, May 5, 1976, abandoned, which is a continuation-in-part of Ser. No. 570,766, Apr. 23, 1975, abandoned. This application Sep. 21, 1979, Ser. No. 77,729
Int. Cl.³ A63B *61/00*
U.S. Cl. 273—61 R **27 Claims**

16. A tennis ball comprising an elastically deformable sphere, an electricaly non-conductive cover covering and adhered to said sphere, a multiplicity of first electrically conductive fibers, a continuous length of each of said first fibers extending through said cover and having portions on opposite sides of said cover without being stitched or woven into said cover to provide a multiplicity of first electrically conductive paths passing through said cover, and a multiplicity of second unwoven electrically conductive fibers arranged in a body without piercing said cover and lying only between said cover and said sphere in electrical contact with said first fibers, said

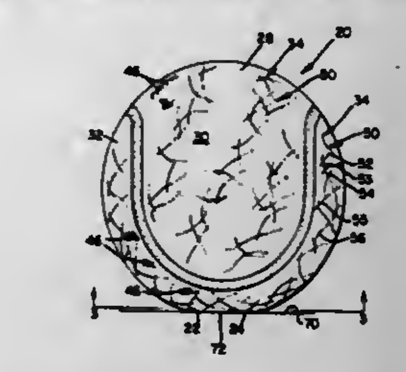

second fibers definig a multiplicity of second electrically conductive paths interconnecting different ones of said first electrically conductive paths.

4,299,385
RACQUET
Robert O. Boden, 1580 Gaywood Dr., Altadena, Calif. 91001
Continuation-in-part of Ser. No. 926,647, Jul. 21, 1978, abandoned. This application Aug. 10, 1979, Ser. No. 65,557
Int. Cl.³ A63B *51/02*
U.S. Cl. 273—73 D **24 Claims**

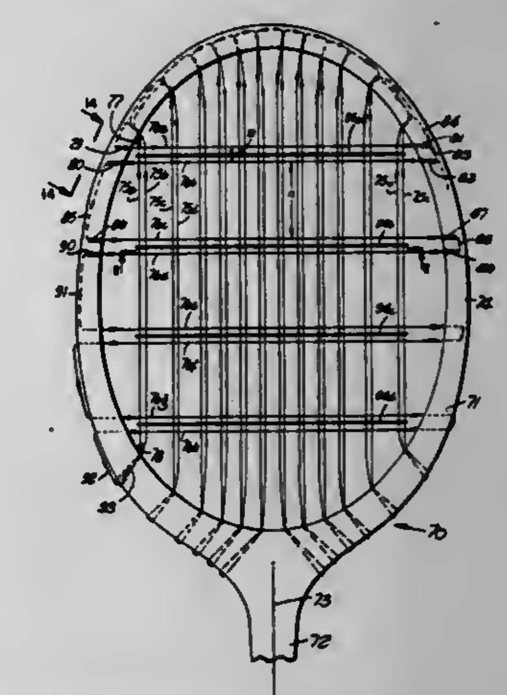

1. A racquet comprising:
a racquet body having a loop portion and a handle portion projecting therefrom; and
longitudinal and transverse strings carried by said loop portion of the body and crossing one another;
said transverse strings being fewer in number than said longitudinal strings;
said longitudinal strings in advancing past successive transverse strings being interwoven therewith so that an individual longitudinal string has portions received at different sides of different transverse strings;
said longitudinal strings being arranged in pairs with the two strings of each pair being closely proximate one another and with successive pairs being spaced apart a distance greater than the individual strings of a pair;
the two strings of one of said pairs being formed of a single continuous length of string material doubled back on itself at one end of said two strings of that pair;
the opposite ends of said two strings of said pair extending through a common opening in said loop portion of the racquet body and then extending laterally in opposite directions from said opening to form two additional pairs of the strings.
6. A racquet comprising:

a racquet body having a loop portion and a handle portion projecting therefrom;
longitudinal strings carried by said loop portion of the body and extending longitudinally of the racquet body and said handle portion thereof;
transverse strings carried by said loop portion of the body;
said longitudinal and transverse strings being interwoven so that individual longitudinal strings in passing a series of transverse strings are received alternately at front and rear sides thereof, and individual transverse strings in passing a series of longitudinal strings are received alternately at front and rear sides thereof;
said transverse strings being fewer in number than said longitudinal strings; and
at least one connector extending transversely of the racquet body and having portions extending about different longitudinal strings in a relation interconnecting the longitudinal strings against relative transverse movement at the location of the connector;
said connector being attached to said longitudinal strings at locations so spaced that the longitudinal strings apply tensional force on the connector at some locations between successive longitudinal strings.

4,299,386
ELECTRONIC FENCING GAME
Ralph J. Kulesza; Alan A. Hicks, both of Chicago; Gunars Licitis, Jr., Lombard, and Howard J. Morrison, Deerfield, all of Ill., assignors to Marvin Glass & Associates, Chicago, Ill.
Filed Jul. 26, 1979, Ser. No. 60,883
Int. Cl.³ A63H *13/06*
U.S. Cl. 273—85 F **26 Claims**

13. In an electronic fencing game, the combination of, a pair of movably mounted fencing figures each having a movable sword provided with an electrically conductive tip portion, and a conductive blade portion, a conductive blade portion of one of said swords being electrically insulated from the conductive tip portion thereof, and means responsive to the engagement of said conductive blade portion of said one sword with said other sword for developing an audible signal, each of said figures having an electrically conductive target area, means responsive solely to the electrical engagement of the sword tip of one of said figures with the target area of the other figure for developing a first sound signal, and means responsive solely to the electrical engagement of the sword tip of the other of said figures with the target area of said one figure for developing a second sound signal which is distinguishable from a first sound signal area.

24. A fencing game, comprising a base member having an elongated slot therein, a pair of fencing figures each slidably mounted in said slot and rotatable about a vertical axis and each having a single handle adapted to be grasped by a player for manually moving the figure along said slot and rotating the same about said vertical axis, a sword pivotally mounted on each of said figures for movement about a horizontal axis, and means on each of said figures interconnecting said handle and said sword for moving said sword about said horizontal axis in response to movement of said handle relative to said figure, each of said figures including a central vertically extending post, means for mounting said handle on said post for rotation about an axis perpendicular to the vertical axis of said post, and link means interconnecting said handle and said sword so that when said handle is lifted said sword is lowered by rotation about said horizontal axis, said game further including a housing enclosing said central post and said link means, and means

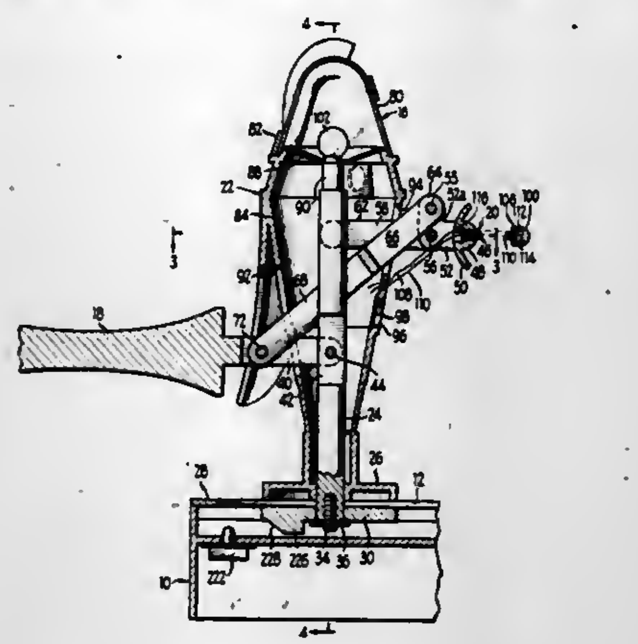

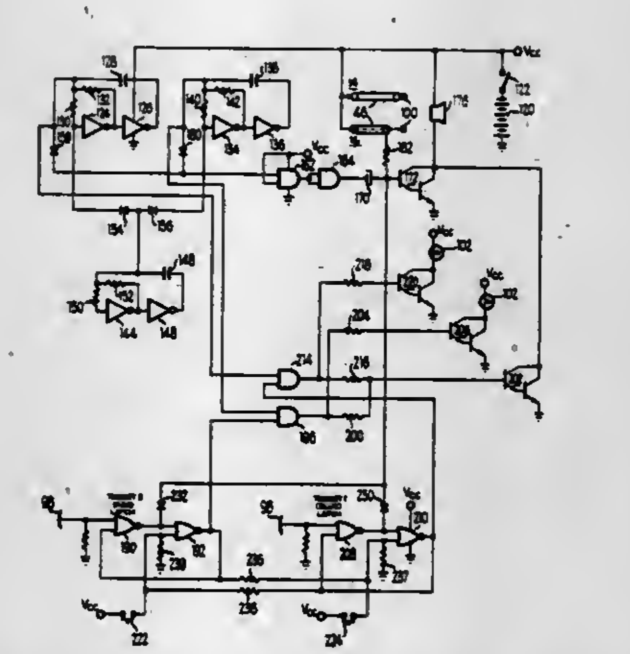

for connecting said housing to said post for movement therewith.

4,299,387
GAME HAVING A MAGNETIC TARGET CAPABLE OF HOLDING A PLURALITY OF OBJECTS
Toru Nishimiya, Tokyo, Japan, assignor to Tomy Kogyo Co., Inc., Tokyo, Japan
Filed Feb. 28, 1980, Ser. No. 125,368
Claims priority, application Japan, Apr. 23, 1979, 54-55006[U]
Int. Cl.³ A63F *7/00*
U.S. Cl. 273—119 A **9 Claims**

1. A game having a playing sufrace, an object launcher and a magnetic target member associated with the playing surface which comprises:
a plurality of ferromagnetic objects each capable of being propelled independently across said playing surface by said object launcher, each of said objects independently capable of being attracted to and magnetically held by said magnetic target member when another of said objects has not already been first attracted to and held by said magnetic target member;
the first of said objects which is attracted and magnetically held by said magnetic target member being made magnetic by said magnetic target member when directly associated with said target member and when magnetized by said magnetic target member then serving as a target member for a subsequent one of said objects, said subsequent one of said objects being magnetized when associated with said first of said objects which is associated with said object target member and said subsequent one of said objects then serving as a target member for the next of said objects to be propelled by said object launcher;
a housing member associated with said playing surface and located over said magnetic target member, said housing

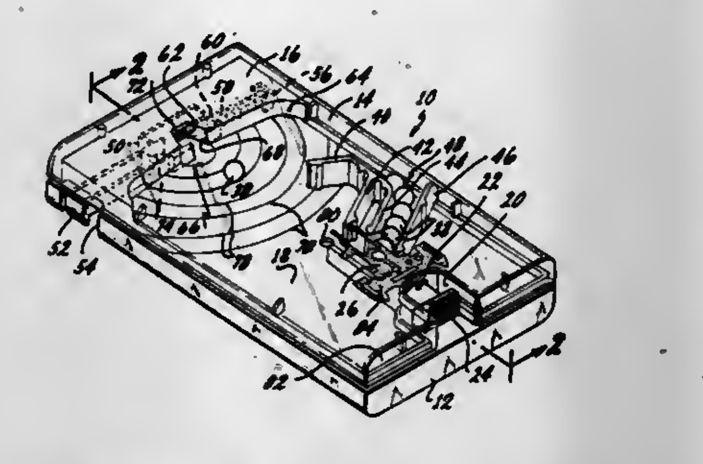

member including an opening sized to accept one of said objects and located adjacent to said magnetic target member so as to expose a portion of said magnetic target member through said opening and to allow said first of said objects to be located in said opening proximal to said magnetic target member to magnetize said first of said objects.

4,299,388
APPARATUS FOR CONTROLLING A REELED CHANCE BASED AMUSEMENT DEVICE
David Resch, and Gregory Nanus, both of Las Vegas, Nev., assignors to Concorde Manufacturing Company, Las Vegas, Nev.
Filed Jun. 20, 1979, Ser. No. 50,364
Int. Cl.³ A63F *5/04*
U.S. Cl. 273—143 R **14 Claims**

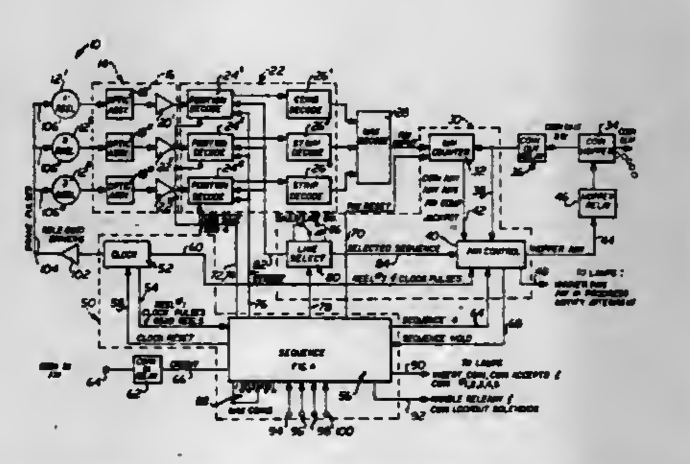

6. Apparatus for controlling an amusement device including a plurality of rotatable reels provided with indicia in the form of discrete symbols, the apparatus comprising, in combination:
(A) input means associated with the reels of an amusement device for continuously detecting the position of each of the reels while the reels are rotating;
(B) computing means connected to the input means for receiving reel position signals from the input means and maintaining data on plural positions of each of the reels; and
(C) comparator means connected to the computing means for receiving reel symbol signals from the computing means and comparing the symbols on each of the reels as a function of the position of the reels and determining if a predetermined match exists between the symbols of the reels;
the amusement device having a plurality of pay lines consisting of information indicating the position of the reels and the computing means including, in combination: index circuit means connected to the input means for receiving reel position data from the input means and processing the data received to determine a plurality of pay lines; and strip decode means connected to the index circuit means and to the comparator means for receiving a signal from the index circuit means and converting data contained in the signal into symbol outputs, decoded data being fed to the comparator means; the index circuit means including a plurality of position decode circuits, one such decode circuit to each of the reels, each position decode circuit comprising, in combination: counter means connected to the input means for receiving therefrom a signal which is a function of at least one position of an associated one of the rotatable reels;
shift register means connected to the counter means for storing current and prior reel position data; data selector means connected to the shift register means for routing data from the shift register means to the strip decode means; and binary decoder means connected to the data selector and to the strip decode means for converting binary signals received from the data selector means into a reel pay line signal.

4,299,389
MAGNETIC CHESSBOARD WITH SELF-CENTERING PIECES
Lino Miolo, Via S. Rocco, 2 Schio, (Vicenza), Italy
Filed Jul. 24, 1979, Ser. No. 60,179
Claims priority, application Italy, Jul. 25, 1978, 85586 A/78
Int. Cl.² A63F *3/01*
U.S. Cl. 273—239 **3 Claims**

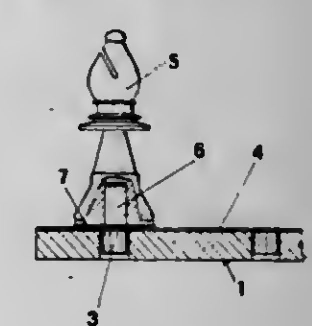

1. A magnetic chessboard with self-centering pieces, said chessboard comprising a plurality of squares wherein each said square of the chessboard is provided with a cylindrical permanent magnet embedded in its center, each cylindrical permanent magnet of each square having a vertical geometrical axis and a magnetic axis with the same orientation in all of the squares, and each piece being provided with a cylindrical permanent magnet embedded in its base, each last-named permanent magnet having a geometrical axis parallel to said base and a magnetic axis parallel to the magnetic axes of the magnets of said squares whereby the self centering effect between the board and the pieces in enhanced.

4,299,390
ELECTION BOARD GAME WITH CAMPAIGN PROMISE MARKERS
Raul J. Delgado, Hipolito Unanue N° 1515 - Lince, Lima, Peru, assignor to Raul Delgado, Lima, Peru
Filed Oct. 15, 1979, Ser. No. 84,744
Int. Cl.³ A63F *3/00, 3/04*
U.S. Cl. 273—257 **14 Claims**

1. A political campaign game comprising:
a polygonal game board having a plurality of sides and defining a play surface;
indicia on said play surface defining first and second groups of spaces along the sides of the board providing a play path for the players; said first group of spaces containing indicia idicative of distinct political subdivisions and said second group of spaces containing indicia providing game

instructions; one of said spaces in said second group providing a starting space from which play is commenced;
a plurality of distinct play pieces to be selected and used by each player and moved along said spaces in said play path;
chance means for randomly determining the number of spaces a play piece may be moved along said play path during a player's turn;
a plurality of campaign promise markers including a plurality of sets of markers, one set for each player of the game; the campaign markers in each of said sets including a plurality of subsets of markers; each of said subsets within a set of campaign markers bearing different indicia representative of a different kind of campaign promise in a

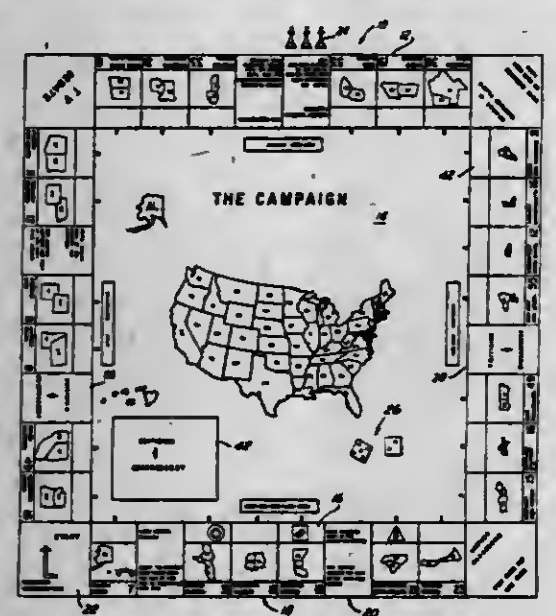

political campaign and containing a plurality of individual markers bearing the distinctive indicia of the subset; and
a campaign promise scoring value chart including a plurality of columns, said chart including indicia associated with each of said columns respectively representing each of said different campaign promises whereby there is one column for each such kind of promise; and
a plurality of rows extending transversely of said columns respectively representing said political subdivisions; the intersection of said columns and rows on the chart defining spaces containing the maximum and minimum percentage of the vote values for at least some of said campaign promises in each of said political subdivisions.

4,299,391
SEQUENCE FORMING AND ALIGNMENT GAME
Sol Silver, 290 Ninth Ave., New York, N.Y. 10001
Filed Mar. 26, 1980, Ser. No. 133,961
Int. Cl.[3] A63F *3/00*
U.S. Cl. 273—271 21 Claims

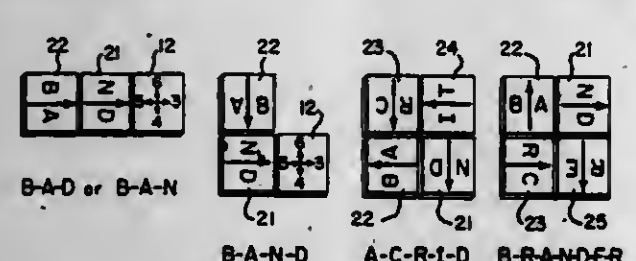

4. A method of playing a sequence forming and alignment game using at least two sets of markers, each of said markers bearing at least one alphanumeric character, said method comprising the steps of:
placing said markers one at a time on a playing surface with the placement of markers alternating between the sets of markers in the game;
in the placement of a marker, forming an intelligible sequence using at least one character on the marker that is placed and one or more characters available on the playing surface;
orienting the placement of each marker on the playing surface in accordance with the number of characters in the intelligible sequence formed by its placement;
permitting replacement of a previously placed marker during the step of placing another marker if the number of characters in an intelligible sequence formed by such replacement is longer than the number of characters in the intelligible sequence that had been formed by the marker that is replaced; and
ending the game when at least four markers from one set are in a row on the playing surface.

4,299,392
TOP DICE ROULETTE GAME
Bobby J. Tammen, Rte. 2-Box 233, Colorado City, Tex. 79512
Filed Aug. 4, 1980, Ser. No. 175,146
Int. Cl.[3] A63F *3/00*
U.S. Cl. 273—274 6 Claims

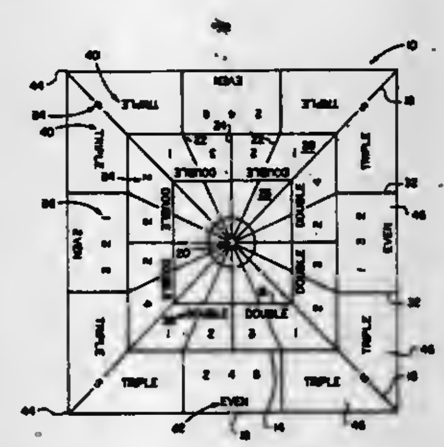

1. A game of chance which comprises:
a game board having three concentric squares thereon, each square being divided into four equal parts by lines which extend from its four corners to the center of the game board;
wherein the two smallest squares are further divided into sixteen subsections each, having each of their four equal parts divided by three additional lines which extend from equally spaced locations along the side of the square to the center of the game board;
wherein that portion of the largest square which extends outside the two smaller squares is further divided into twelve subsections, each subsection being formed by lines which extend perpendicularly from the sides of the largest square to the sides of the next smaller square, said lines being located so that they meet the next smaller square at the subsection dividing lines which are on either side of its corners;
wherein each of the subsections in the two larger squares is provided with one indicia, or a combination thereof, that is permanently affixed thereto; and
a means for simultaneously casting, by chance, a plurality of game commands and indicia identically corresponding to said indicia on the game board.

4,299,393
AREA RADIATION TARGET
Willis J. Benckert, Altamonte Springs, and Richard J. Wangler, Maitland, both of Fla., assignors to International Laser Systems, Inc., Orlando, Fla.
Filed Apr. 14, 1980, Ser. No. 140,316
Int. Cl.[3] F41J *5/02*
U.S. Cl. 273—310 14 Claims

13. A radiation detector comprising in combination:
radiation detection means;
at least one fiber optic fiber having at least one end operatively connected to said radiation detector means;

scattering means covering a portion of said fiber optic fibers to produce a first scattering of radiation impinging thereupon to produce scattered radiation entering the lateral

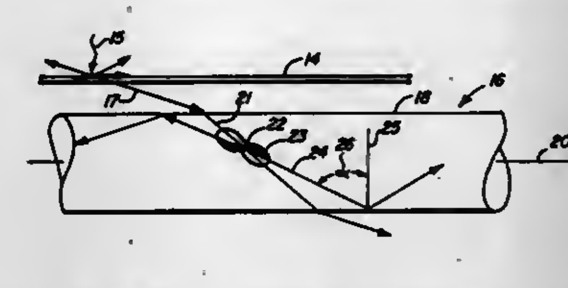

side of said fiber optic fiber and said fiber optic fiber producing a second scattering of radiation to produce radiation in said fiber optic fiber trapped by the total internal reflection of the fiber.

4,299,394
WHIRLING TOY AND WHIRLING TOY GAME
Myron Greenspan, 154 Girard St., Brooklyn, N.Y. 11235
Filed Feb. 11, 1980, Ser. No. 120,654
Int. Cl.[3] A63B *67/00;* A63H *5/00*
U.S. Cl. 273—348 14 Claims

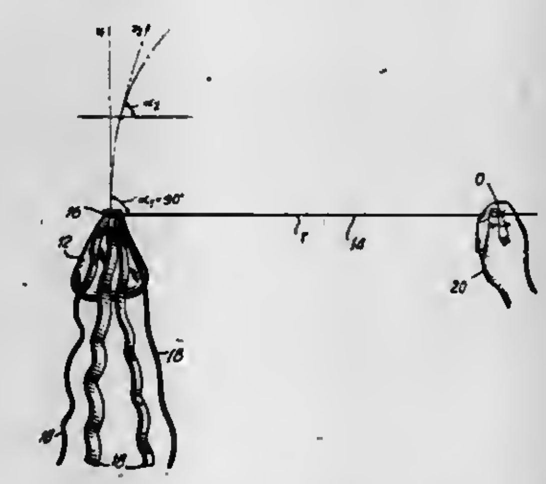

1. A whirling toy game comprising means defining a player location; a weighted object; an elongate member having a predetermined length and attached at one end thereof to said weighted object, whereby holding said elongate member at the other end thereof permits whirling of said weighted object in a generally vertical plane about a radius approximately equal to said predetermined length and permits release of said weighted object in a generally upward direction; and omnidirectional indication means for determining the distance of said weighted object after its return to the ground anywhere in a 360° circle with respect to said player location defining means.

9. A whirling toy comprising a weighted object; an elongate member having a predetermined length and attached at one end thereof to said weighted object, whereby holding said elongate member at the other end thereof permits whirling of said weighted object about a radius approximately equal to said predetermined length; sound producing means associated with said weighted object responsive to the flow of air proximate to said weighted object while the same is being whirled in the air; and velocity threshold detection means for normally disabling said sound producing means and for enabling said sound producing means only when said weighted object moves at a velocity at least equal to a predetermined value, whereby said weighted object produces an audible sound only when whirled at or above said velocity.

4,299,395
GEOTHERMAL WELL HEAD ASSEMBLY
Lehman T. Reed, 2505 Chester St., Bakersfield, Calif. 93301
Filed Apr. 21, 1980, Ser. No. 142,105
Int. Cl.[3] E16J *15/18;* E21B *23/00*
U.S. Cl. 277—12 3 Claims

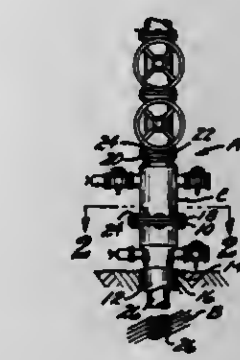

1. A geothermal well head assembly of the type that includes a first flange on the upper extremity of a first casing that is cemented in and extends down a well bore that is in communication with a heated fluid producing zone, said first flange having a cylindrical interior surface, a spool that includes second and third flange; a valved manifold that controls the flow of heated fluid from said zone which manifold has a fourth flange on the lower end thereof; a plurality of bolts that removably secure said second flange to said first flange, and said fourth flange to said third flange; a second casing that has an external diameter substantially smaller than the interior diameter of said first casing and concentrically disposed therein, said first and second casing defining an annulus shaped space therebetween, said second casing having an upper end adjacently disposed to said second flange and a lower end that occupies a fixed position relative to said heated fluid producing zone, said first casing having a longitudinally extending recess in the interior thereof below said cylindrical interior surface, said recess terminating at the bottom in a first circular body shoulder, said second flange having a plurality of circumferentially spaced first and second internally threaded bores therein, the improvement for adjustably effecting a seal between said first and second casing without shutting said well down that allows the latter to expand and contract longitudinally due to variations in the temperature thereof, said improvement comprising:
a. a plurality of first and second resilient sealing rings;
b. a first rigid ring disposed in said annulus space and resting on said first body shoulder, said first ring having a top from which first and second circular slots extend downwardly, said first slot adjacent said recess, and said second slot adjacent the exterior surface of said second casing, with at least one of said first sealing rings disposed in said first slot and at least one of said second sealing rings in said second slot;
c. a second rigid ring slidably movable in said annulus space above said first ring, said second ring including a downwardly projecting portion that contacts the upper surface of said first sealing ring;
d. a third rigid ring slidably movable in said annulus space and with at least the major portion thereof disposed above said second sealing ring;
e. a plurality of first and second elongate rigid force exerting members that have upper wrench engageable ends and lower flat force exerting ends, said first and second members having first and second threads thereon intermediate said upper and lower ends, said first threads engaging said first internally threaded bores and said first elongate members extending downwardly through recesses in said third ring for said lower end of said first elongate members to contact said second ring and said second threads engaging said second internally threaded bores to dispose said lower ends of said second elongate members in pressure contact with said third ring, with said first elongate members

when rotated in a first direction moving downwardly relative to said second flange to move said second ring downwardly to compress said first resilient ring and radially deform the same into sealing contact with said recess and first rigid ring at a desired pressure, and said second elongate members when rotated in a first direction moving downwardly relative to said second flange to move said third ring downwardly to compress said second resilient ring and radially deform the same into sealing contact with said first rigid ring and the exterior surface of said second casing at a desired pressure, and the desired sealing pressures effected by said first and second sealing rings capable of being periodically varied by use of said first and second elongate members without shutting in said geothermal well.

4,299,396

QUICK RELEASE SEAL RETAINER

Danny J. Becker, Peoria; Ronald L. Satzler, Princeville; and Keith E. Koch, Tremont, all of Ill., assignors to Caterpillar Tractor Co., Peoria, Ill.

PCT No. PCT/US80/00271, § 371 Date Mar. 12, 1980, § 102(e) Date Mar. 12, 1980.

PCT Filed Mar. 12, 1980, Ser. No. 197,831

Int. Cl.³ F16J ***15/10;*** **B29H** ***5/02***

U.S. Cl. 277—12 **9 Claims**

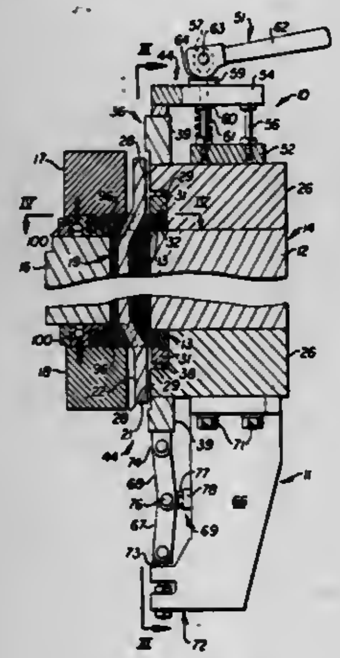

1. A quick release seal retainer (10,11) adapted for connecting a seal segment (13) to a base (12), comprising:

a mounting block (26) connected to the base (12) and having a projection (28) extending outwardly above the base (12) defining a slot (29) between the base (12) and projection (28);

a clamp member (31) positioned within the slot (29);

means (36) for slidably connecting the clamp member (31) to the projection (28) of the mounting block (26) for rectilinear movement of the clamp member (31) between a first position at which the seal segment (13) is clamped between the clamp member (31) and the base (12) and a second position at which the seal segment (13) is released;

means (44) for quickly locking the connecting means (36) and hence the clamp member (31) at the first position and for moving the clamp member (31) between the first and second positions; and

wherein said connecting means (36) includes a bore (37) extending through the projection (28), a stud (38) slidably positioned within the bore (37) and having one end connected to the clamp member (31), and a bar (39) connected to the other end of the stud (38).

4,299,397

INFLATABLE PACKER ASSEMBLY WITH CONTROL VALVE

Eugene E. Baker, and Ernest E. Carter, Jr., both of Duncan, Okla., assignors to Halliburton Services, Duncan, Okla.

Division of Ser. No. 48,977, Jun. 15, 1979, Pat. No. 4,260,164, which is a continuation-in-part of Ser. No. 8,774, Feb. 2, 1979, abandoned. This application Jan. 9, 1981, Ser. No. 223,703

Int. Cl.³ F16J ***15/40***

U.S. Cl. 277—34 **6 Claims**

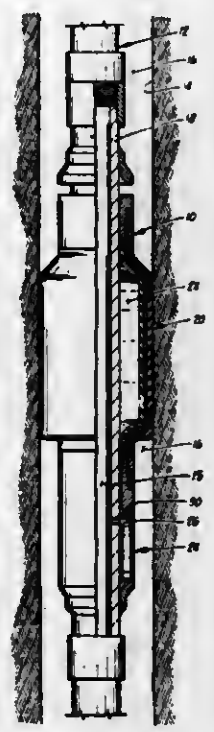

1. An inflatable packer assembly, comprising:

a cylindrical mandrel;

a packer disposed about an outer cylindrical surface of said mandrel, said packer including an inflatable element; and

valve means, connected to said packer, for directing fluid under pressure to said packer to inflate said element, said valve means including a cylindrical valve body having first and second ends with a cylindrical inner surface connecting said first and second ends, said cylindrical outer surface of said mandrel being closely received within said cylindrical inner surface of said valve means and said cylindrical outer surface of said mandrel extending past each of said first and second ends of said valve means.

4,299,398

PRESSURE COMPENSATING SHAFT SEAL

Edward C. Wahl, Arlington Heights, Ill., assignor to Gits Brothers Mfg. Co., Bedford Park, Ill.

Filed Nov. 13, 1979, Ser. No. 93,520

Int. Cl.³ F16J ***15/34, 15/46***

U.S. Cl. 277—65 **32 Claims**

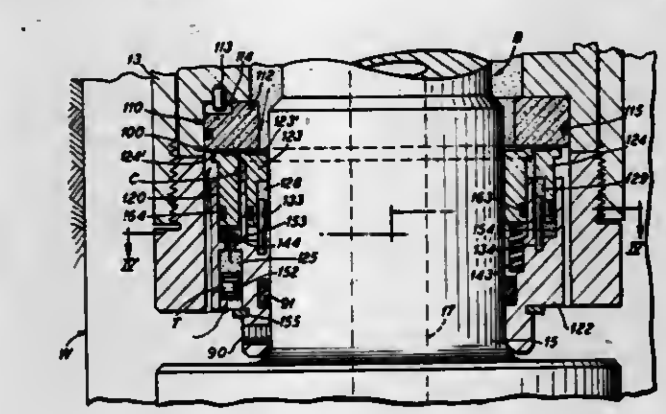

1. A shaft seal for sealing a variable pressure medium from a shaft bearing which comprises a face ring, a pair of spaced telescoped seal rings respectively exposed to the medium and to the bearing and each having an end face riding on said face ring and cooperating therewith to define therebetween a sealed intermediate chamber, means transmitting pressure of the medium to said intermediate chamber without exposing the intermediate chamber to the medium to minimize any pressure difference across the seal ring exposed to the medium and to protect the seal ring exposed to the bearing from the medium, and means relatively rotating said face ring and said seal rings.

4,299,399

GASKET OF RUBBER OR SIMILAR MATERIAL

Per Haaland, Oslo, Norway, assignor to A/S Den Norske Remfabrik, Norway

Filed Oct. 24, 1979, Ser. No. 87,846

Claims priority, application Norway, Oct. 27, 1978, 783644; Apr. 27, 1979, 791410

Int. Cl.³ F16J ***15/10***

U.S. Cl. 277—207 A **5 Claims**

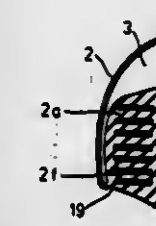

5. A gasket of resiliently deformable material comprising a deformable core portion and a jacket portion which is relatively thinner than said core portion and which extends from said core portion so as to bound, with a part of the surface of said core portion, a closed chamber containing a lubricant.

4,299,400

SEALING BOOTS

Mario Tsuru, Yokosuka, Japan, assignor to Nissan Motor Co., Ltd., Yokohama, Japan

Filed Feb. 4, 1980, Ser. No. 118,079

Claims priority, application Japan, Feb. 7, 1979, 54-13689[U]

Int. Cl.³ F16J ***15/52***

U.S. Cl. 277—212 FB **3 Claims**

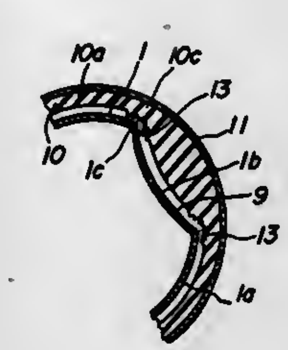

1. A sealing boot having a mounting portion to be mounted on a rigid objective structure provided with at least one concave portion, the sealing boot being fastened against the structure by a fastening means, the improvement wherein the sealing boot comprises serrations on an inner surface of said mounting portion at a position facing against the edge portion of the concave portion of the rigid objective structure.

4,299,401

PISTON RING AND METHOD OF MAKING SAME

Harold E. McCormick, Ballwin, Mo., assignor to Ramsey Corporation, Manchester, Mo.

Filed Sep. 12, 1979, Ser. No. 74,734

Int. Cl.³ F16J ***9/22***

U.S. Cl. 277—216 **11 Claims**

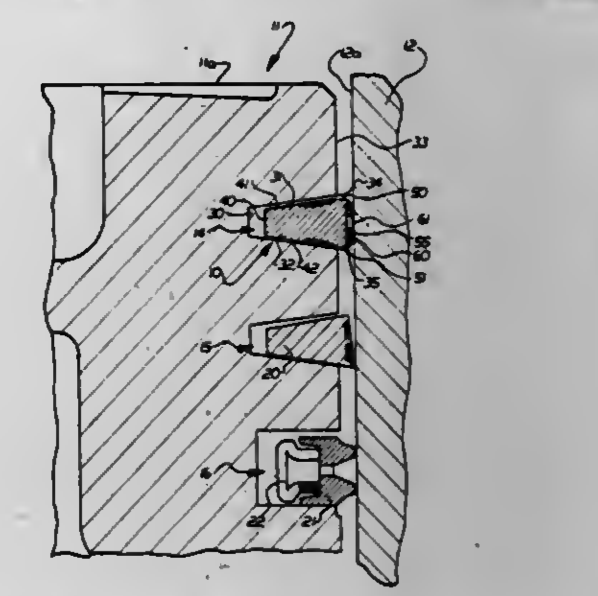

1. A metal piston ring to be mounted in a tapered groove in a piston, said piston ring having tapered sidewalls for engaging sidewalls of the piston ring groove, said sidewalls of said piston ring extending at a first angle to the horizontal as they diverge radially outwardly, said sidewalls of said piston ring groove extending at a second angle to the horizontal as they diverge radially outwardly, said second angle being less than said first angle, each of said sidewalls of said piston ring being hardened in respective localized areas, said localized areas each including a band of hardened material extending around each respective sidewall of the piston ring near the outer periphery of the piston ring, said hardened band terminating short of the outer periphery of the piston ring, said piston ring due to the termination of the hardened band short of the outer periphery of the piston ring having unhardened side surface areas on each sidewall, said unhardened side surface areas being located at the outer periphery of the ring and extending from the outer periphery of the ring radially inward to terminate in said piston ring groove.

4,299,402

BLADE HOLDER FOR SABER SAW

Simon J. Hoffman, P.O. Box 75821, Los Angeles, Calif. 90075

Division of Ser. No. 902,198, May 2, 1978, Pat. No. 4,204,692. This application Nov. 2, 1979, Ser. No. 90,804

Int. Cl.³ B23B ***31/22***

U.S. Cl. 279—75 **1 Claim**

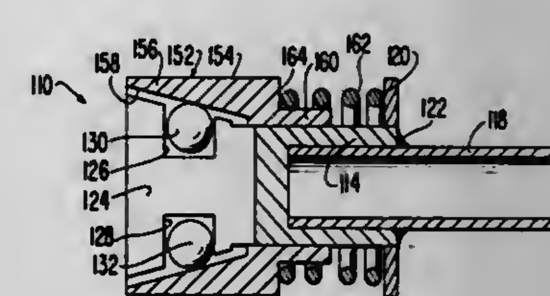

1. A holder for a saber saw blade of the type having a pair of opposed side marginal edges and a pair of aligned notches on opposed side marginal edges thereof near one end of the blade comprising: a support having a blade-receiving slot extending thereinto, the slot having a pair of opposed, longitudinal side edge margins corresponding to the side marginal edges of the blade when the latter is inserted into the slot, said support

having a pair of aligned recesses therein on opposed sides of the slot and adjacent to respective side margins of the slot; a ball in each recess, respectively, the center lines of the balls being on a line angularly disposed to a line extending between the side margins of the slot, said balls being movable relative to the support into positions across the slot near respective side margins thereof for entering the notches of the blade in the slot to hold the blade therewithin; a cam element having a cam surface engageable with the balls for urging the same into said positions, said cam element being movable longitudinally of the slot; and a spring engaging the cam element and urging the same in a direction to force the balls into said positions.

4,299,403
WHEELED CARRIER FOR HAND LUGGAGE AND THE LIKE
William R. Brewer, Arleta, Calif., and Hamilton C. de Jong, 254 S. Berkeley Ave., Pasadena, Calif. 91107, assignors to Hamilton C. de Jong, Pasadena, Calif.
Filed Nov. 9, 1979, Ser. No. 92,654
Int. Cl.³ B62B *1/00*
U.S. Cl. 280—47.29 **8 Claims**

1. A foldable carrier for hand luggage and the like, comprising
a main frame including two mutually spaced and generally parallel side members each of which includes generally parallel forward and rear beam elements mutually spaced transversely of the frame and interconnected to form a truss-like structure,
upper and lower cross members interconnecting the side members,
two ground engaging wheels journaled on the respective end portions of the lower cross member,
an upper frame including a handle and pivotally mounted on the upper cross member, with means for releasably locking the upper and lower frames in coplanar working relation,
said forward beam elements defining a bed plane and carrying at their lower ends respective laterally extending foot formations adapted with the wheels to support the main frame in a loading position with said bed plane substantially perpendicular,
a platform frame comprising two side rails in a common plane, each pivoted at one end on said lower cross member for swinging movement of the platform frame between a folded position generally parallel to said bed plane and a working position transverse of the bed plane,
support means at the other ends of the side rails for engaging the ground to hold the platform frame horizontal in said loading position of the main frame,
oblique brace means rigidly mounted below each side rail for stiffening the same and including a support portion engageable with the upper face of the corresponding foot formation to support the platform frame in said working position when the main frame is inclined rearwardly for traveling,
and a recess in the upper face of each said foot formation in position to receive said support portion of the brace means for stabilizing said brace means against lateral deflection.

4,299,404
SKI BINDING PART
Josef Svoboda, Schwechat, Austria, assignor to TMC Corporation, Baar, Switzerland
Filed Nov. 2, 1978, Ser. No. 957,089
Claims priority, application Austria, Mar. 3, 1978, 1546/78
Int. Cl.³ A63C *9/24*
U.S. Cl. 280—634 **7 Claims**

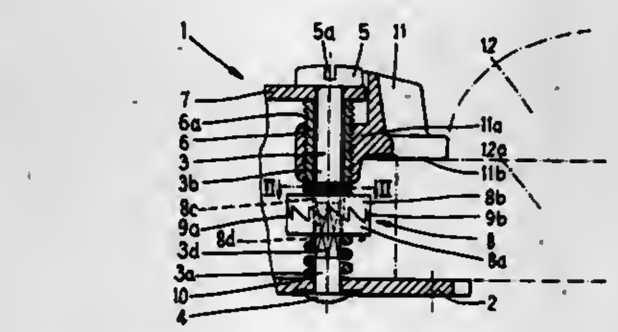

1. A ski binding part for use in holding a ski boot onto a ski, comprising:
a frame;
a sole holder adapted to engage the upper surface of the sole of said ski boot; and
adjustment means mounted on said frame for effecting a movement of said sole holder relative to said frame and said upper surface of said ski boot, said adjustment means comprising means defining an internally threaded hole in said sole holder, an elongated externally threaded bolt threadedly engaged with said threads in said hole so that a rotation of said bolt will effect a movement of said sole holder along the length of said bolt, and slip coupling means having an input member and an output member, said output member being connected to said externally threaded bolt, said input member having tool engaging means thereon to facilitate a manual driving rotation of said input member, said slip coupling means further having means for effecting a positive coupling of said input member to said output member and a consequent rotary drive of said output member and said bolt and a movement of said sole holder freely along the length of said bolt until said sole holder engages said upper surface of said sole of said ski boot whereupon a continued driven rotation of said output member by said input member will be resisted by said sole of said bolt and said input member will rotate relative to said output member to thereby control the force by which said sole holder engages said upper surface of said sole.

4,299,405
TRACTOR BALLAST WEIGHT ASSEMBLIES
John A. Withers, Barnsley; Alec Sykes, Huddersfield, both of England, and Stephen M. Brogan, Overath, Fed. Rep. of Germany, assignors to David Brown Tractors Limited, Huddersfield, England
Filed May 9, 1980, Ser. No. 148,317
Claims priority, application United Kingdom, May 16, 1979, 16926/79
Int. Cl.³ B60R *27/00*
U.S. Cl. 280—759 **4 Claims**

1. A front ballast weight and towing point assembly, for an agricultural tractor, comprising a plurality of weights in the form of contiguous parallel plates clamped to the tractor frame in longitudinal vertical planes, and a clevis which fits partially within transversely aligned recesses in the front sides of the

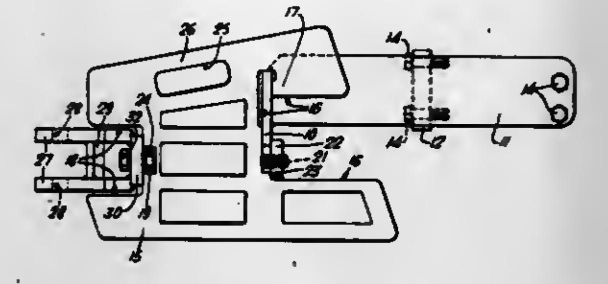

weights and has upper and lower jaws with vertically aligned holes for the reception of a hitch pin and a rear wall interconnecting said jaws and having at least one hole through which and through an aligned longitudinal hole in one of the weights a bolt is passed to clamp the clevis to the tractor frame.

4,299,406
MOTORCYCLE SAFETY SYSTEM
Warren R. Thomas, 38 Rivocean Dr., Ormond Beach, Fla. 32074
Filed Jan. 21, 1980, Ser. No. 114,003
Int. Cl.³ B60R *21/00*
U.S. Cl. 280—733 **30 Claims**

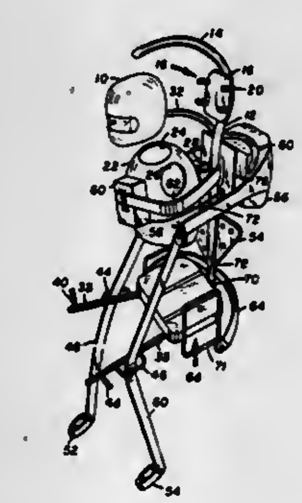

1. A device for protecting an occupant of a motor vehicle, said device comprising:
a rigid element mounted on the motor vehicle and being vertically arranged for protecting the spine of the occupant and extending up over the head of the occupant;
a rigid chest protection means attached to said rigid element and being of a size to envelope the upper torso of the occupant, and having apertures therein to permit the occupant's arms to extend therethrough;
a first inflatable air bag means arranged in the front of said chest protection means;
a second inflatable air bag means arranged in the back of said chest protection means;
means for inflating said first and second air bag means;
means for actuating the inflating means; and strap means extending around said second inflatable air bag means for drawing the legs of the occupant upwardly towards said rigid chest protection means upon inflation of said second inflatable air bag means, said air-bags being disposed so that when said first and second air bag means are inflated, said first air bag means protects the front of the occupant and said second air bag means protects the rear of the occupant.

4,299,407
AUTOMOBILE STEERING MECHANISM
Anton K. Simson, 13227 Aubrey St., Poway, Calif. 92064
Filed Feb. 28, 1980, Ser. No. 125,718
Int. Cl.³ B62D *1/18*
U.S. Cl. 280—775 **13 Claims**

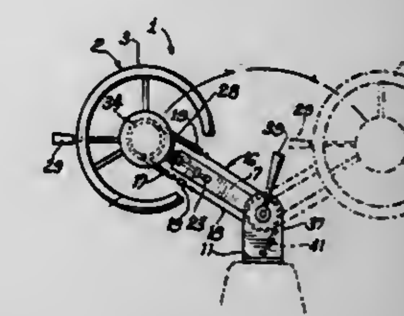

1. A steering wheel assembly which can be shifted laterally in order to accommodate at least two side by side driving positions, and means for coupling said steering wheel to a main steering rod, said assembly and means comprising:
a shaft driven by the steering wheel;
an elongated support member having its lower end pivotally connected to a stationary base, and its upper end pivotally connected to the shaft;
a console rotatingly mounted around the shaft;
means for linking the shaft to the main steering rod; and
means for holding the console at a constant angular position in relation to the base when the support member is pivoted around its lower end, and when said steering wheel and shaft is rotated.

4,299,408
INPUT MOTION COUPLING TO A MOTION AMPLIFIER FOR USE IN PASSIVE SEAT BELT RESTRAINT SYSTEMS
Juichiro Takada, 3-12-1 Shinmachi Setagayaku, Tokyo, Japan
Filed Jun. 4, 1979, Ser. No. 45,172
Claims priority, application Japan, Nov. 27, 1978, 53-145272
Int. Cl.³ B60R *21/02*
U.S. Cl. 280—804 **3 Claims**

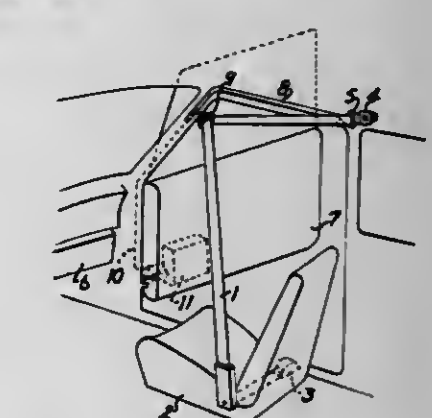

1. In a passive occupant restraint belt system which includes a restraining belt, and apparatus for moving the belt between occupant-restraining and occupant-releasing positions in response to opening and closing movements of a door of the vehicle comprising belt transfer means engaging the belt for moving the belt between the restraining and releasing positions and motion transmission means coupled to the belt transfer means for transmitting and amplifying opening motions of the door to the transfer means, the transmission means including a motion amplifier mounted on either of the vehicle body and door, the improvement comprising means for coupling an input component of the amplifier and the other of the body and door during normal door opening and closing movements, the means for coupling including a linkage that comprises a first

link having one end coupled to an input component of the motion amplifier, a second link having a pair of closely spaced-apart resilient leg portions, joined at only one end, means at said one end for coupling said second link to the other of the body and door, and means for releasably coupling the other end of said first link to the other end of said second link to permit axial movement therebetween in emergency situations when the motion transmission means or belt transfer means is rendered inoperative, the means for releasing including a bulge in a corresponding location in each leg portion defining with the bulge in the other leg portion a hole, and a pin on the first link releasably received in said hole, which pulls axially of the linkage out of the hole by forcing the leg portions apart upon application of a high pulling force on the linkage.

4,299,409
SKI POLE
Klaus Gedicks, 2209 W. 46th Ave., Anchorage, Ak. 99503
Filed Dec. 5, 1978, Ser. No. 966,579
Int. Cl.³ A63C *11/22*
U.S. Cl. 280—819 **12 Claims**

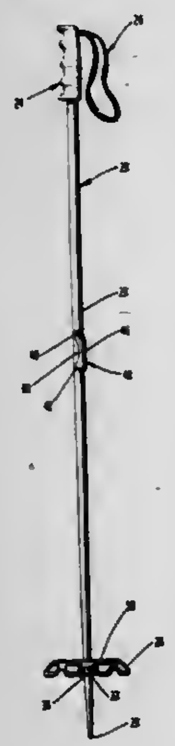

1. An improved ski pole for providing a foot rest during travel of a skier on a ski lift, comprising:
a ski pole including an elongated shaft having a handle at a first end;
first bracket means for extending outwardly of the shaft for releasably fixing the ski pole relative to the ski lift in a first axial direction toward a second end of the shaft;
said first bracket means including at least one recess adapted for engagement with a portion of the ski lift for limiting movement of the shaft toward and away from the ski lift;
the bracket means being pivotably mounted on the shaft at about a mid-section of the shaft, the bracket means being movable between a first position substantially aligned with the shaft and a second position substantially perpendicular to the shaft;
means for preventing the axial movement of the bracket means toward the handle;
means for preventing the pivotal movement of the bracket means beyond said second position toward the handle of the shaft; and
second bracket means for extending generally radially outwardly of the shaft for at least a distance sufficient to support a foot of a skier, the second bracket means being selectively fixable relative to the shaft in the first axial direction, the second bracket means being disposed on the shaft a predetermined distance away from the first bracket means toward the second end of the shaft.

4,299,410
SOFT-COVER PAPERBACK BOOK AND A METHOD OF MANUFACTURING SUCH A BOOK
Eero Jukola, Karjoportintie 20, 42700 Keuruu, Finland
Filed Sep. 5, 1979, Ser. No. 72,768
Claims priority, application Finland, May 11, 1979, 791516
Int. Cl.³ B42C *9/00, 11/00*
U.S. Cl. 281—21 R **10 Claims**

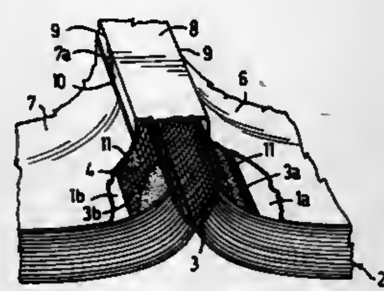

1. A soft-cover paperback book, which comprises a block (2) consisting of leaves (1) joined together at their spine edges as well as a soft cover (5) fastened to said block, characterized in
that a flexible, firm support layer (3) is fastened to the back of the book block (2) and
that the soft cover (5) is fastened to the book block (2) only at the front and rear cover (6, 7) along a stripe (11) of glue positioned adjacent the spine edge of the first and the last leaf (1*a*, 1*b*) of the book block respectively,
so that the spine portion (8) of the soft cover (5) positioned between said glue stripes (11) is loose from the spine of the book block.
7. A method of manufacturing a soft-cover paperback book, by joining a plurality of leaves (1) by means of glueing at their spine edges to form a book block (2) and fastening a soft cover (5) to said book block by means of glueing, characterized by
fastening a flexible, firm support layer (3) to the back of the book block (2) by glueing,
applying a glue stripe (11) parallel to the spine of the book block on the first and the last leaf (1*a*, 1*b*) of the book block (2), and
fastening the soft cover (5) at its front cover (6) and rear cover (7) by pressing onto said glue stripes (11).

4,299,411
PRESSURE-SENSITIVE RECORD MATERIAL
Bruce W. Brockett, Appleton, Wis., assignor to Appleton Papers Inc., Appleton, Wis.
Continuation-in-part of Ser. No. 365, Dec. 29, 1978, abandoned. This application Jun. 5, 1979, Ser. No. 45,768
Int. Cl.³ B32B *5/16;* B41M *5/16; 5/22;* C09D *11/00*
U.S. Cl. 282—27.5 **23 Claims**

13. A pressure-sensitive record sheet material comprising a first substrate having a coating of pressure rupturable capsules containing an organic solvent solution of an acidic resin superimposed on a second substrate coated with a water-insoluble, approximately chemically neutral pigment having Pyridyl Blue adsorbed thereon, the two coatings being in contiguous juxtaposition.

4,299,412
PRODUCTION OF SOCKET ENDS IN THERMOPLASTIC PIPES
Gunnar Parmann, Bergen, Norway, assignor to Rieber & Son A/S, Bergen, Norway
Filed Nov. 1, 1977, Ser. No. 847,440
Claims priority, application Norway, Aug. 29, 1977, 772972
Int. Cl.³ F16L *17/02*
U.S. Cl. 285—110 **10 Claims**

1. In combination, a thermoplastic pipe having a socket end including an internal annular groove; and a combined mould and sealing element suitable for sealing off a joint between said socket end and an insert end of a cooperating pipe for being used as a portion of a body of a mould for both fabricating said socket end of said pipe and simultaneously inserting said element in said internal groove, said element consisting of a main body disposed in annular form composed of an elastically yielding material housing a reinforcing core of relatively non-elastic material capable or retaining its shape relative to said main body, said main body having a radial outer portion adapted to its active condition to abut the bottom of said internal groove and in an inactive condition to project freely outwards as a flap to define with an inner and opposing portion of

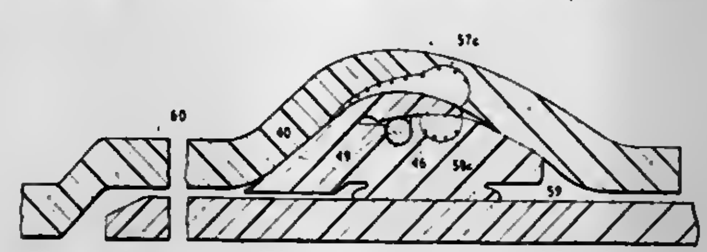

said body an opening dimensioned to facilitate ready introduction and housing of said reinforcing core in said main body, said flap having a wall thickness which is locally reduced relative to said flap and said body at a position remote from the free end of said flap to define a recess to permit ready bending and clamping of said flap against said inner and opposing portion to close off said opening and thereby simultaneously preclude access to said reinforcing core on completing the transition from said inactive to said active condition during relative movement of said socket end of said pipe over the insert end of a cooperatng pipe.

4,299,413
PIPE COUPLING
Martin D. Neher, Burkburnett, Tex., assignor to Ciba-Geigy Corporation, Ardsley, N.Y.
Filed Jun. 26, 1979, Ser. No. 52,228
Int. Cl.³ F16L *35/00*
U.S. Cl. 285—114 **8 Claims**

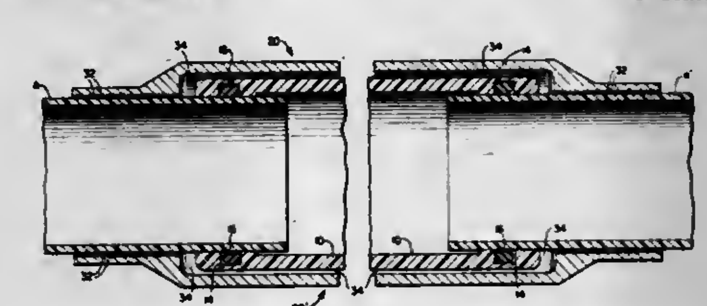

1. A coupling for connecting sections of pipe comprising a tubular sleeve adapted to receive the ends of the pipe sections, the inside of the sleeve having sealing means for providing a pressure-tight seal between the pipe sections and the sleeve; and a pair of clamp members formed for connection to each other about the sleeve and pipe sections, and means for connecting the clamp members together about said sleeve and pipe sections, each clamp member having a generally arcuate cross section providing an internal recess for receiving the entire sleeve, and each said clamp member having gripping means thereon to grip each pipe section, the dimensions of the recess being such that when the clamp members are connected to each other about the sleeve and pipe sections, the clamp members are spaced from the sleeve and are out of contact with the sleeve, and said gripping means grip said pipe sections so that the clamp members absorb mechanical stresses and the sleeve is free of mechanical stress.

4,299,414
EXPANSION JOINT
Lothar Bachmann, Dillingham Hill Rd., Auburn, Me. 04210
Filed Apr. 2, 1980, Ser. No. 136,444
Int. Cl.³ F16L *55/00*
U.S. Cl. 285—187 **10 Claims**

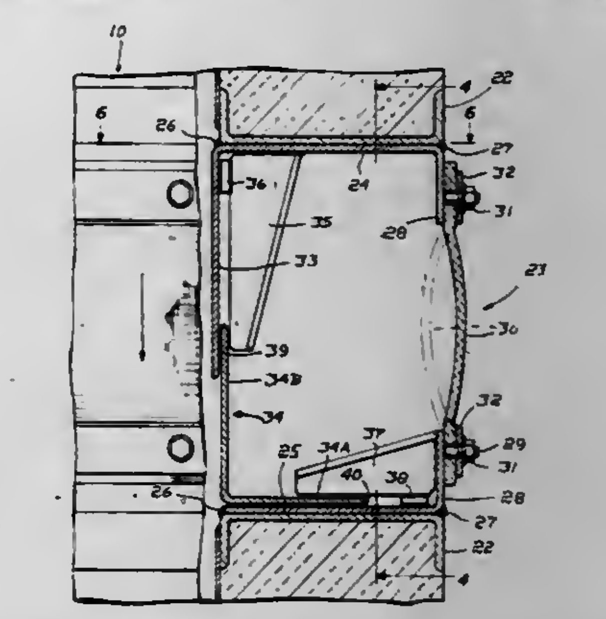

1. An expansion joint to couple the ends of sections of a duct for such hot gases as flue, exhaust and process gases, said joint including an upstream member and a downstream member, each for attachment to the end wall of the corresponding duct section, each member including an outer flange disposed at right angles thereto and towards the other member, the flanges substantially in alignment when thus attached, said upstream member also including an inner flange disposed at right angles thereto and toward the inner end of the downstream member and defining a portion of the flue, a floating seal including first and second right angular portions, the first partially overlapping the surface of the inner flange of the upstream member which faces said outer flange and defining with said surface the boundaries of a first clearance and the second portion partially overlapping the downstream member and defining therewith the boundaries of a second clearance, resilient lip seals, one for each clearance and secured to one boundary thereof and in resilient sliding engagement with the other boundary of that clearance, retaining means attached to said members and in engagement with the surface of both portions of the floating seal opposite their boundary defining surfaces to maintain said clearances, and a fabric seal secured to said outer flanges and dimensioned lengthwise of the joint to enable it to flex in response to any relative movement between said members in response to expansion forces.

4,299,415
SWIVEL FITTING AND METHOD FOR MAKING
Hugh H. Dorman, Marshall, Mich., assignor to Patco, Marshall, Mich.
Filed Dec. 21, 1978, Ser. No. 971,999
Int. Cl.³ F16L *27/00*
U.S. Cl. 285—281 **1 Claim**

1. A swivel fluid fitting which comprises a two-piece outer member having a first outer member portion that includes first and second spaced-apart and substantially parallel surfaces, having a second outer member portion that includes a third surface juxtaposed against said second surface and that includes a fourth surface, having a bonded joint that joins said second and third surfaces, having a bore with a first end that orthogonally intercepts said first surface and with a second end that is disposed on said second outer member portion, having a circumferential recess in said bore that is interposed intermediate of said ends of said bore and that opens into one of said juxtaposed surfaces, and having a sealing gland groove in said bore that is disposed intermediate of said first end of said bore and said circumferential recess;

a thrust ring being disposed in said circumferential recess and being permanently retained in said outer member by said bonded joint;

an expandable retaining ring being disposed in said circumferential recess intermediate of said thrust ring and said second end of said bore and being permanently retained in said outer member by said bonded joint;

an inner member having a cylindrically-shaped outer surface, being rotatably inserted into said first bore and through said thrust ring, having an inner end that extends

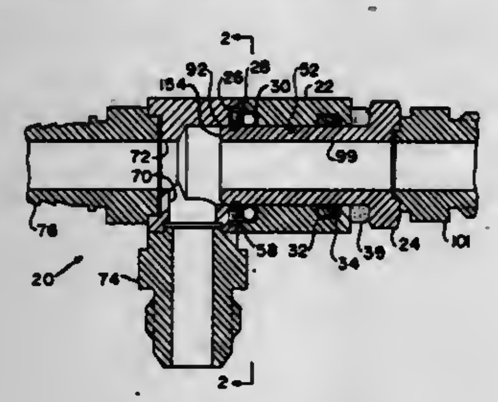

into said second outer member portion, having a retaining ring groove in said cylindrically-shaped outer surface that retainingly engages said expandable retaining ring, and having a second port that extends longitudinally through said inner member and that communicates with said first port;

a plurality of steel balls being circumferentially disposed around said cylindrically-shaped outer surface and inside said circumferential recess intermediate of said thrust ring and said first end of said bore; and

a sealing ring being inserted into said sealing gland groove.

4,299,416
SWIVEL WITH REMOVABLE PACKING GLAND
Wayne A. Grosch, R.R. #2, Osceola, Nebr. 68651
Filed Mar. 3, 1980, Ser. No. 126,338
Int. Cl.³ F16L ***27/00***
U.S. Cl. 285—281 **8 Claims**

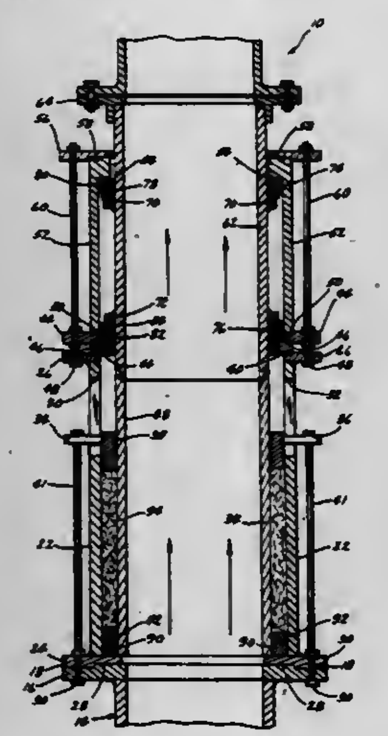

1. A swivel for a rotary drilling machine including a rotatable Kelly bar and means for circulating drilling fluid through the Kelly bar, comprising,

a hollow cylindrical packing body having upper and lower ends, means removably securing the lower end of said packing body to the upper end of said Kelly bar,

a hollow cylindrical packing stem positioned within said packing body,

packing material between the outside surface of said packing stem and the inside surface of said packing body,

a packing gland ring positioned within said packing body and extending around said packing stem above said packing material,

said packing body having at least a pair of vertically disposed slots formed therein,

said packing gland ring having protruding portions extending through said slots,

means connected to each of said protruding portions and said packing body for selective movement of said packing gland ring whereby said packing material may be compressed into sealing engagement with the inside surface of said packing body and the outside surface of said packing stem,

means at the lower interior end of said packing body extending around said packing stem for preventing said packing material from being forced from between said packing body and stem when said packing gland ring is selectively moved downwardly relative to said packing body and stem,

means securing a bearing body to the upper end of said packing body, said bearing body extending upwardly from said packing body,

said bearing stem mounted within said bearing body and having its lower end threadably secured to the upper end of said packing stem,

means connecting the upper end of said bearing stem to a hose means extending laterally therefrom to said means for circulating drilling fluid,

a bearing means between said bearing body and said bearing stem to permit rotation of said Kelly bar, packing body and said bearing body relative to said bearing stem and hose means,

said packing material preventing the drilling fluid, which is being circulated through said Kelly bar, from coming into contact with said bearing means.

4,299,417
TAMPER PROOF PLASTIC SECURITY SEAL
Kenneth R. McClure, St. Charles, Ill., assignor to Dickey Manufacturing Company, St. Charles, Ill.
Filed Mar. 6, 1980, Ser. No. 127,772
Int. Cl.³ B65D ***33/34***
U.S. Cl. 292—320 **6 Claims**

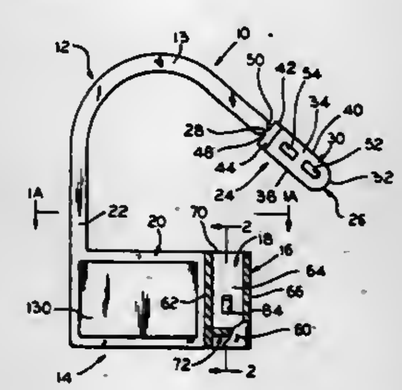

1. A tamper proof security seal comprising:

a shackle,

a retainer for said shackle,

said retainer having a keeper portion defining a latching cavity forming a rectilinear bore, and a flange portion on one side of said keeper portion, with said bore and said flange portion being in coplanar relation,

one end of said shackle being made fast to said retainer flange portion, and the other end defining a latching segment that has elastic memory,

said latching cavity having opposed inner wall portions that in part form said bore, and having one end of same open to receive said latching segment,

one of said latching cavity wall portions having first stop lug means protruding therefrom toward the other of said latching cavity wall portions and located adjacent said cavity open end,

with said other of said latching cavity wall portions having second stop lug means protruding therefrom toward said one cavity wall portion and located in said cavity below the level of said first stop lug means,

said latching segment having recesses spaced to register respectively with said latching cavity lug means in free fitting relation when said latching segment is in its latching position in said latching cavity whereby in said latching positions said latching segment is in unstressed relation,

said lug means protruding lateraly of said cavity for disposing their projecting portions in substantial alignment with the longitudinal axis of said bore,

whereby application of said shackle latching segment to its said latching position requires force feeding said latching segment consecutively past said lug and under bending stress to said latching position wherein the latching segment elastic memory restores said latching segment to its unstressed relation for latched relation in said latching cavity.

4,299,418
DEVICE FOR GUIDING A LATERAL PART OF A FENDER ON AN AUTOMOBILE VEHICLE
Jacques Dossin, Courbevoie, France, assignor to Automobiles Peugeot and Societe Anonyme Automobiles Citroen, both of Paris, France
Filed Oct. 23, 1979, Ser. No. 87,333
Claims priority, application France, Nov. 6, 1978, 78 31315
Int. Cl.³ B60R ***19/08***
U.S. Cl. 293—126 **4 Claims**

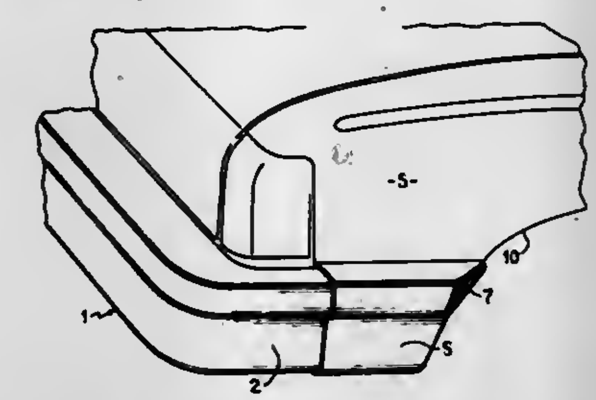

1. A device for guiding a lateral part of a bumper, said bumper being of the type adapted to absorb energy by moving longitudinally of a vehicle fender and thereafter resuming the initial position, said device comprising a case and means for fixing the case directly on the fender, the lateral part of the bumper having an end portion which is engaged in the case, a clearance being provided between an end of the end portion of the lateral part of the bumper and an inner end portion of the case, said lateral part of the bumper being guidedly movable in the case to a predetermined extent substantially equal to said clearance in a direction longitudinally of the fender such that damage to the case is minimized.

4,299,419
FIREPLACE ASH CLEANING SHOVEL
Joseph F. Kalan, P.O. Box 1, Diamondville, Wyo. 83116
Filed Mar. 17, 1980, Ser. No. 131,059
Int. Cl.³ A47F ***13/08***
U.S. Cl. 294—55 **3 Claims**

1. A fireplace ash cleaning shovel comprising a generally rectangular base chamber having a flat bottom wall and upstanding side and rear walls and open front and upper ends, a generally flat lid having a downturned forward wall section, said lid being hinged rearwardly of said chamber, the forward edges of said side walls being angled upwardly and rearwardly, and the downturned forward wall section of said lid being correspondingly angled to mate with and to close the open front end of said chamber, the side and rear edges of said lid being downwardly flanged to sealably overlap the walls of said chamber, elongated hollow handle means attached to and projecting rearwardly at generally right angles from the rear of said chamber, actuating rod means sleeved within said handle means and having oppositely bent ends, spring means in-

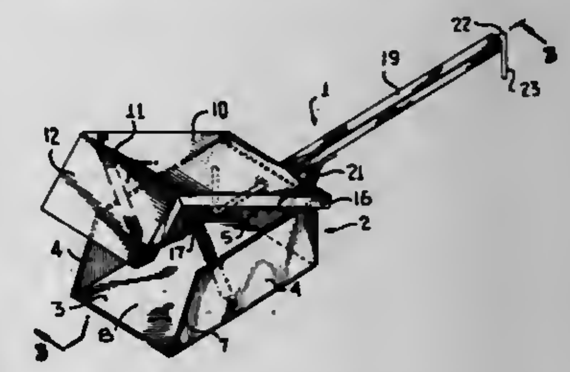

cluding spaced coil springs interposed between and attached to said lid adjacent the downturned forward wall section and to said chamber, said outermost bent end being rotatable to cause the opposing bent end to engage with and tiltably elevate said lid against spring pressure to expose said open front end whereby said shovel may be slidably inserted into a fireplace and filled with ashes whereupon closing of said lid permits removal of the shovel and reopening and emptying of the contents at a remote discharge point.

4,299,420
LICENSE DOOR HOLDER ASSEMBLY
Roy L. Piepho, Rte. 4, Sterling, Ill. 61081
Filed Aug. 10, 1979, Ser. No. 65,636
Int. Cl.³ B62D ***25/00***
U.S. Cl. 296—1 C **5 Claims**

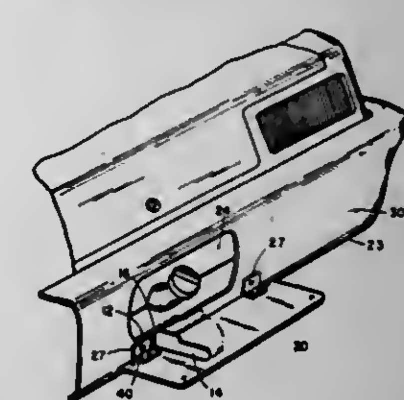

1. A license door holder assembly comprising an automobile having an upright rearward side portion provided with a gasoline spout-receiving opening, a license plate door disposed rearwardly of said opening, said door having an inner substantially planar side normally facing said opening for at least partially covering said opening when said door is in closed position, the upper edge of said door being movable rearwardly and downwardly to an open position, said license plate door being substantially planar on its said inner side, hinge means securing said door to the rearward side of said automobile, said hinge means having a forward section attached to said automobile and having a rearward section attached to said door, said hinge means sections hinging about a horizontal axis, a door holder having a mounting section, means attaching said mounting section of said door holder to said automobile, said door holder having a locking section, means attaching said locking section to said mounting section in a manner for pivoting about an upright axis, said locking section being placeable in a door-locking position extending rearwardly from said upright axis out across the upper side of said door when said

door is in said open position, said locking section being of sufficiently small dimension in a direction from its forward side to its rearward side as seen at times when said locking section is in storage position disposed parallel to said inner side of said door that said locking section will not substantially interfere with the movement of said door from said open position to said closed position, said mounting section having an elongated slot into which said means attaching said mounting section of said door holder to said automobile is disposed.

4,299,421
TELESCOPIC TRAILER POST SUPPORT
Lloyd J. Bontrager, 58080 S.R. 13 South, Middlebury, Ind. 46540
Filed Jun. 12, 1979, Ser. No. 47,708
Int. Cl.³ B60P *3/34*
U.S. Cl. 296—27 **2 Claims**

1. In a collapsible vehicle having a body and a top shiftable between a collapsed position on said body and an elevated position above said body, a telescopic post carried by said body adjacent each corner thereof and engaging said top and having inner and outer telescopic parts, means for shifting said top between its collapsed and elevated positions, the improvement wherein each telescopic part has an upper and lower end portion, the lower end portion of said inner part carrying a first guide, the upper end portion of said outer part carrying a second guide, the lower portion of said inner part including an end edge, the upper end portion of said outer part including an end edge, an opening formed in said lower end portion and spacedly from said end edge of the inner part, an opening formed in said upper end portion and spacedly from said end edge of the outer part, each guide means including a protrusion having a flat shoulder part and an oppositely located bevelled shoulder part, said first guide means fitted about the lower end portion of said inner part with the protrusion thereof extending into said opening in the inner part, said second guide means fitted into the upper end portion of said outer part with the protrusion thereof extending into said opening of the outer part, said protrusion shoulder of each guide means restrictively abutting the edge of said opening in the part end portion interfitting with the guide means to interlock the guide means with each portion, each protrusion bevelled shoulder part constituting means for guidably seating the protrusion into a said part end portion opening as the guide means is fitted about or into its accommodating end portion whereby the guide means is fixedly secured to the end portion in a sheer resistant manner, said guide means constituting abutment means for preventing separation of said inner and outer parts upon extension of such parts.

4,299,422
WINDOW BOOT FOR TRUCK-CAMPER COMBINATIONS AND THE LIKE
John E. Pettit, 18219 - 46th Pl., South, Seattle, Wash. 98188
Filed May 5, 1980, Ser. No. 146,429
Int. Cl.³ B60P *3/32*
U.S. Cl. 296—166 **5 Claims**

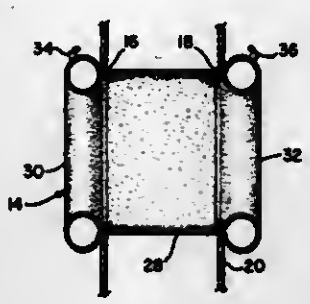

1. For use between the adjacent window or passageway openings in the cab of a vehicle and a removable vehicle component on the vehicle such as a camper, cap or canopy, a passageway seal assembly or boot comprising: a flexible material tunnel having an external circumference approximately the same as the internal circumference of the passageway openings within which the boot is installed; and inflatable, toroidal chambers at each end of the tunnel, each chamber being of sufficient dimensions to be retained by the passageway openings outside of the space between the passageway openings, which is filled by the tunnel.

4,299,423
KNOCKDOWN SETTEE
Herbert C. Saiger, Troy, Ohio, assignor to Plantation Patterns, Inc., Birmingham, Ala.
Filed Dec. 13, 1979, Ser. No. 103,288
Int. Cl.³ A47C *4/02*
U.S. Cl. 297—440 **9 Claims**

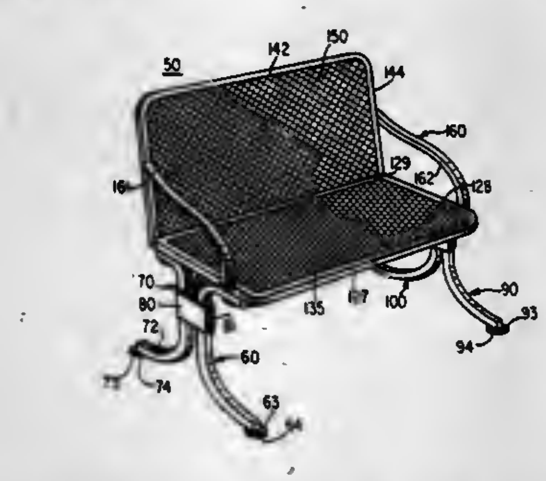

1. A knockdown settee, comprising: a pair of double leg members each including two legs, two seat assembly supports and connecting spacer structure defining an opening having a pair of parallel sides, said legs and said supports disposed in a generally common plane parallel with said parallel sides of said opening of said spacer structure; a U-shaped cross bar having two legs connected by a bight adapted detachably to connect said pair of double leg members rigidly in operative position, the legs of said cross bar being disposed within the spacer structure openings of said pair of double leg members to function as wedges and to establish the detachable rigid connections between said cross bar and said pair of double leg members; a seat assembly including a seat, a back and a pair of arms pivoted at the free ends respectively to the sides of said seat and said back; means rigidly connecting the rear of said seat to said back when said back is pivoted by said arms to operative position; and spaced means at the bottom of said seat for attaching engagement of adjacent seat assembly supports of said pair of double leg members connected by said cross bar; whereby said knockdown settee is readily and rigidly assembled by said cross bar, and when disassembled said seat and said back are moveable by said pivoted arms into substantial alignment and said double leg members and said cross bar when separated may lie on said seat and back below the level of said arms, thereby minimizing space required for packaging and storage.

4,299,424
CUTTING TOOL ASSEMBLY
Maurice K. LeBegue, Argillite, Ky., and Charles R. Herron, Bluefield, Va., assignors to National Mine Service Company, Pittsburgh, Pa.
Filed Dec. 3, 1979, Ser. No. 99,637
Int. Cl.³ E21C *25/12*
U.S. Cl. 299—93 **9 Claims**

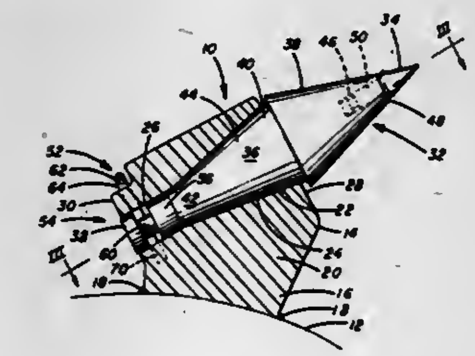

1. A cutting tool assembly comprising,
a cutter member having an elongated shank portion and a head portion,
said shank portion having an upper first end portion and a lower second end portion,
said head portion extending from said shank portion upper first end portion and having a cutting tip extending from one end thereof,
said shank portion having a combined upper elongated tapered body portion and a lower elongated cylindrical body portion,
a base member having a longitudinal bore extending therethrough,
said bore having an elongated tapered portion for receiving said shank tapered body of said shank portion and an elongated cylindrical portion for receiving said shank cylindrical body portion, said bore elongated tapered portion extending from an upper end of said base member into said base member and said elongated cylindrical portion extending from said bore elongated tapered portion through said base member to a lower end of said base member,
said shank tapered body portion decreasing in diameter along the length thereof to the diameter of said shank cylindrical body portion,
said bore elongated tapered portion decreasing in diameter along the length thereof so that the portion of said base member surrounding said bore elongated tapered portion engages said shank tapered body portion along the entire length of said shank tapered body portion,
said shank tapered body portion including a maximum diameter portion at an upper end thereof and a minimum diameter portion at a lower end thereof with an intermediate diameter portion progressively decreasing in diameter from said shank tapered upper end to said shank tapered lower end,
said bore elongated tapered portion including a maximum diameter portion at an upper end thereof and a minimum diameter portion at a lower end thereof with an intermediate diameter portion progressively decreasing in diameter from said bore tapered upper end to said bore tapered lower end, said bore tapered lower end abutting said bore cylinder portion,
said bore tapered maximum, intermediate, and minimum diameter portions being in complementary engagement with said shank tapered maximum, intermediate, and minimum diameter portions,
said shank cylindrical body portion having an extended length to ensure extension of said shank cylindrical body portion through said bore elongated cylindrical portion to the extreme lower end of said bore,
said shank cylindrical body portion and said bore elongated cylindrical portion having complementary diameters to ensure contact of said shank cylindrical body portion with the surrounding base member free of lateral movement in said bore elongated cylindrical portion,
securing means for engaging said shank cylindrical body portion to retain said shank portion within said bore, and
said securing means being operable to exert a downward axial force upon said shank cylindrical body portion to urge said complementary bearing surfaces into wedging engagement and form a locking tapered fit between said shank tapered body portion and said base member surrounding said bore elongated tapered portion substantially free of relative movement between said shank portion and said base member to prevent wear of said bore elongated tapered portion.

4,299,425
CENTRAL LOCKING MECHANISM FOR WEB DISK WHEELS
Dieter Renz, Rechberghausen; Hermann Schobbe, Fellbach, and Bernd Löper, Korb, all of Fed. Rep. of Germany, assignors to Daimler-Benz Aktiengesellschaft, Stuttgart, Fed. Rep. of Germany
Filed Apr. 27, 1979, Ser. No. 33,841
Claims priority, application Fed. Rep. of Germany, Apr. 27, 1978, 2818512
Int. Cl.³ B60B *3/14*
U.S. Cl. 301—9 CN **1 Claim**

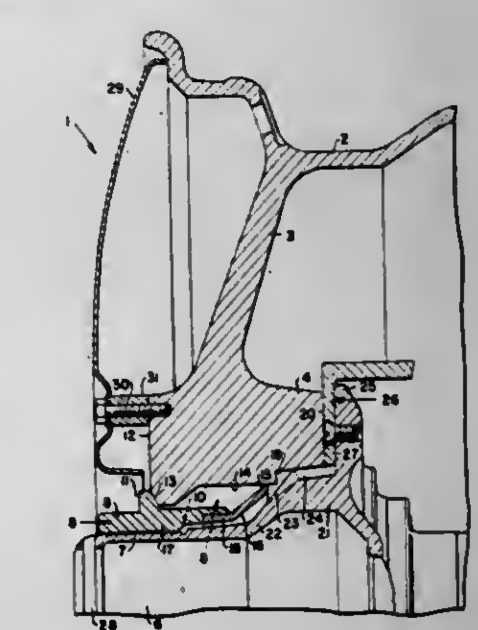

1. In a central locking assembly for web disk wheels of the type wherein the wheel has a central guide bushing with a central bore for receiving a wheel carrier pin, means internally of said bore for radially centering the wheel with respect to the carrier pin, and a nut threadably engageable on said carrier pin and captively retained by a radially inwardly extending flange of said guide bushing, the improvement comprising:
said nut being provided with a radial centering and bracing shoulder that is engageable with a corresponding annular zone on one side of said radially extending flange, a guide collar on said nut extending into said guide bushing and being provided with a funnel-like radially flaring section that is engageable with an opposite side of said radially extending flange, said guide collar having a length extending into said guide bushing corresponding to an axial displacement path of said nut with respect to said wheel carrier pin during threaded engagement, said flaring section reaching said opposite side of said annular flange when said nut is at a

position corresponding to a disengagement end of said threaded engagement axial displacement path, and wherein said funnel-like section has a free rim of an outer diameter which corresponds approximately to an inner diameter of said guide bushing so as to provide a relatively large supporting base always approximately axially aligning and guiding said nut relative to the wheel.

4,299,426

PRESSURE MODULATING VALVES FOR BRAKING SYSTEMS

Eric C. Hales, and Harold Hodkinson, both of Leamington Spa, England, assignors to Automotive Products Limited, Leamington Spa, England

Continuation of Ser. No. 847,565, Nov. 1, 1977, abandoned. This application Nov. 2, 1979, Ser. No. 90,742

Claims priority, application United Kingdom, Nov. 4, 1976, 45867/76

Int. Cl.[3] B60T *13/00*

U.S. Cl. 303—6 C **4 Claims**

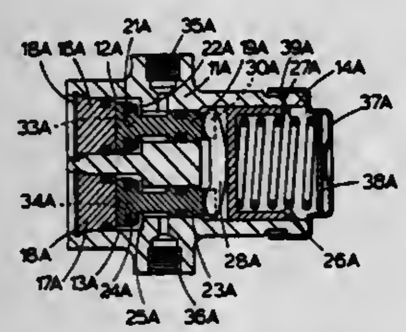

1. A dual pressure modulating valve unit for a vehicle braking system comprising:
- a housing having a first and second bores therein, the second bore extending substantially parallel to the first bore;
- a first inlet port in the housing opening into said first bore for connection to a driver controlled source;
- a second inlet port in the housing opening into said second bore for connection to the driver controlled source;
- a first outlet port in the housing opening into said first bore for connection to one brake actuator;
- a second outlet port in the housing opening into said second bore for connection to another brake actuator;
- a first plunger slidable in the first bore to control communication between the first inlet port and the first outlet port;
- a second plunger slidable in the second bore to control communication between the second inlet port and the second outlet port;
- a beam pivotally connected adjacent one end thereof to the first plunger and adjacent the other end thereof to the second plunger;
- a pivotal connection on said beam intermediate the ends thereof;

biasing means for applying a biasing load to said plungers; and thrust transmitting support means between said biasing means and said pivotal connection;

said beam being pivotable between a normal mode in which the load of the biasing means is divided between said plungers, and an inactive mode in which under the condition of one only of said plungers being under fluid pressure, the load of the biasing means is transmitted in a direct line through the support means to said one plunger and not through said pivotal connection.

4,299,427

ADJUSTING ARRANGEMENT FOR VARIABLE LOAD VALVE DEVICE

Gerhard Fauck, Hanover, Fed. Rep. of Germany, assignor to WABCO Fahrzeugbremsen GmbH, Hanover, Fed. Rep. of Germany

Filed Apr. 14, 1980, Ser. No. 140,347

Claims priority, application Fed. Rep. of Germany, Apr. 27, 1979, 2917073

Int. Cl.[3] B60T *8/22*

U.S. Cl. 303—22 A **6 Claims**

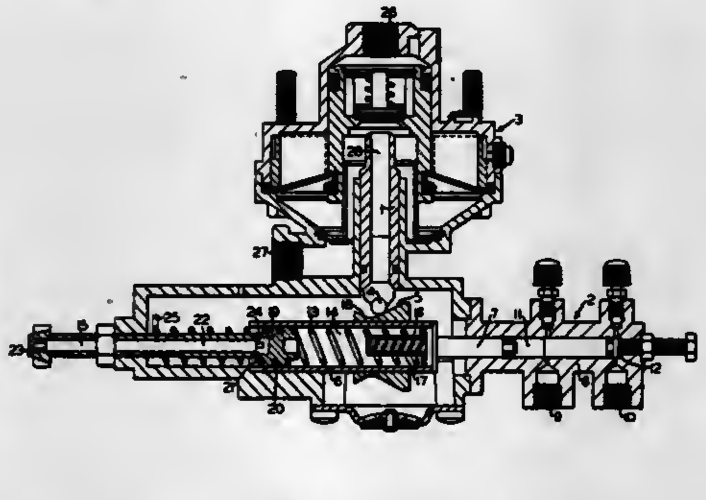

1. For a vehicle having load dependent fluid pressure cushion means supporting the vehicle, there is provided a variable load valve device for automatically developing brake pressure in accordance with the vehicle load condition comprising:
- (a) relay valve means for providing said brake pressure, said relay valve means including an actuating member; and
- (b) vehicle load responsive means for effecting adjustment of said relay valve means so as to vary said brake pressure according to the vehicle load condition including:
  - (i) a control piston operative responsive to the load dependent fluid pressure of said cushion means to position said actuating member of said relay valve means;
  - (ii) a helical spring acting on said control piston in opposition to the fluid pressure of said cushion means;
  - (iii) clamp means for varying the number of active coils of said helical spring; and
  - (iv) an adjusting screw having one end engageable with said clamp means to vary the degree of tension of said helical spring, and the other end arranged externally of said variable load valve device;

wherein the improvement comprises:
- (c) adjusting means including said adjusting screw for varying the position of said clamp means within the coils of said helical spring from a location external of said variable load valve device without disassembly thereof.

4,299,428

AUTOMATIC LOAD-DEPENDENT BRAKE CONTROL DEVICE HAVING WIDE RANGE OF PRESSURE ADJUSTMENT

Gerhard Fauck, Hanover, Fed. Rep. of Germany, assignor to WABCO Fahrzeugbremsen GmbH, Hanover, Fed. Rep. of Germany

Filed Jun. 2, 1980, Ser. No. 155,332

Claims priority, application Fed. Rep. of Germany, Jun. 20, 1979, 2924836

Int. Cl.[3] B60T *8/22*

U.S. Cl. 303—22 A **8 Claims**

1. For a vehicle having load-dependent fluid pressure cushion means supporting the vehicle, there is provided a variable load valve device for automatically developing brake pressure in accordance with the vehicle load condition comprising:
- (a) an inlet and an outlet via which the vehicle brake pressure is transmitted;
- (b) a control chamber to which said inlet is connected;
- (c) a delivery chamber to which said outlet is connected, said control and delivery chambers being interconnected to provide the fluid pressure transmission between said inlet and outlet;
- (d) a first piston subject to said control chamber fluid pressure for movement in one direction;
- (e) a second piston subject to said delivery chamber fluid pressure for movement in a direction opposite said one direction;
- (f) lever means for interconnecting said first and second pistons such that the fluid pressure force on said second piston counteracts the fluid pressure force on said first piston with force amplification;
- (g) valve means operatively responsive to movement of said

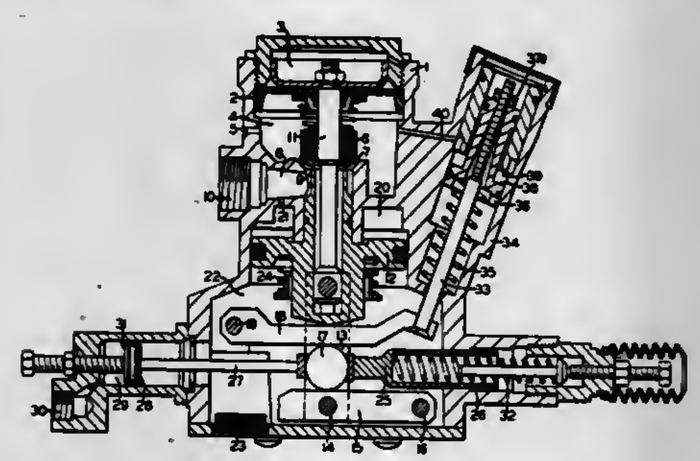

first and second pistons in said one direction to establish fluid pressure communication between said control and delivery chambers, and operatively responsive to movement of said first and second pistons in said opposite direction to interrupt fluid pressure communication between said control and delivery chambers;
- (h) bias means for urging said second piston in said one direction to prevent said fluid pressure force of said second piston from counteracting said fluid pressure force of said first piston via said lever means until a predetermined level of said fluid brake pressure is established; and
- (i) auxiliary means including said bias means for automatically varying said bias on said second piston as a function of said control chamber fluid pressure.

4,299,429

COOLER WITH INCLINED UPPER CO_2 COOLED SURFACE

Paul R. Franklin, Jr., 5211 W. Beaver St., Jacksonville, Fla. 32205

Filed Feb. 13, 1980, Ser. No. 121,303

Int. Cl.[3] A47B *77/08;* **F25D** *3/12*

U.S. Cl. 312—236 **9 Claims**

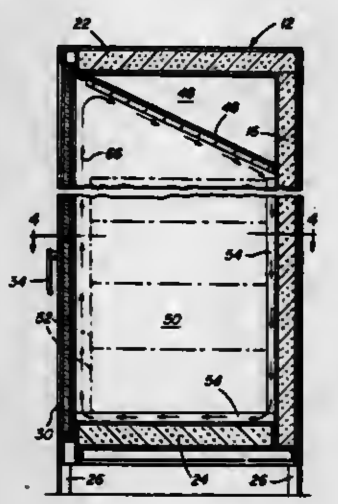

1. A cabinet for containing items to be maintained in a cooled state, said cabinet including a hollow insulated housing having pairs of upstanding side walls and top and bottom walls closing the upper and lower ends of said housing, an inclined baffle mounted within the upper portion of said housing, said inclined baffle being constructed of a material having good heat transfer properties and defining a first closed heat absorbent material receiving chamber thereabove and a second cooled item receiving chamber therebelow within said housing, the lower marginal portion of said baffle terminating substantially against the inner surface of one side wall of said housing, said cabinet including first access means opening into the interior of the first chamber from the exterior of the cabinet and second access means opening into the second items receiving chamber from the exterior of the cabinet, the bottom wall of said housing including upwardly projecting spacer members upon which to support a load of cooled items on said bottom wall, said spacer members being shaped to form, in combination with said load, convection air flow passages between the underside of said load and said bottom wall extending between the lower portion of said one side wall and the lower portion of the side wall opposite said one side wall, said one side wall also including spacer members projecting outwardly therefrom toward the opposite side wall to form, in conjunction with the opposing side of said load, convection airflow passages extending between the lower marginal edge of said baffle and said bottom wall.

4,299,430

LAMP HOLDER FOR BASELESS LAMP

Masaharu Baba, Yokohama; Kiyokazu Honda, Zushi; Yoshiji Yoshiike, Imabari, and Akiyoshi Hashima, Yokohama, all of Japan, assignors to Tokyo Shibaura Denki Kabushiki Kaisha, Kawasaki, Japan

Filed Oct. 19, 1979, Ser. No. 86,665

Claims priority, application Japan, Oct. 23, 1978, 53-129459; Oct. 23, 1978, 53-129461

Int. Cl.[3] H01R *9/09*

U.S. Cl. 339—17 D **5 Claims**

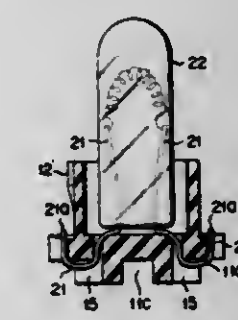

1. A socket for electrically and mechanically connecting a baseless lamp having lead wires extending therefrom at one end thereof with a substrate having electrical conductors thereon comprising:
- a generally cylindrically-shaped main body, open at the top end thereof for receiving the one end of the baseless lamp, having a peripheral wall, and a bottom wall thicker than the peripheral wall;
- an engaging segment and an insulating engaging flange integrally formed with the main body and protruding from the outer periphery of the peripheral wall thereof for engaging the substrate therebetween when the body and engaging segment are rotated in a predetermined direction with respect to the substrate, the flange having upper and lower surfaces;
- wire ports piercing the bottom wall of the main body for receiving the lead wires of the lamp and providing a means for threading the lead wire from the inside of the main body to the outside of the bottom wall thereof;
- a first guide groove in the bottom wall, associated with each wire port, for receiving a lead wire threaded therethrough and providing a means for threading the lead wire to the outer edge of the bottom wall;
- a second guide groove, in the edge of the flange associated with each first guide groove, for receiving a lead wire

threaded therethrough and providing a means for threading the lead wire to the upper surface of the flange; and

a fixing slit in the edge of the flange, associated with each second guide groove and positioned a predetermined distance from its associated guide groove along the flange, for receiving a lead wire threaded through its associated second guide groove and along the upper surface of the flange in a direction opposite to that of the predetermined direction for rotating the body, engaging segment and flange for engaging the substrate, the fixing slit providing a means for threading the lead wire to the lower surface of the flange so as to secure the tip end of the lead wire.

4,299,431
UNDERWATER-MATEABLE ELECTRICAL CONNECTOR

Jeffrey V. Wilson, and Leroy W. Tacker, both of Camarillo, Calif., assignors to The United States of America as represented by the Secretary of the Navy, Washington, D.C.

Filed Mar. 3, 1980, Ser. No. 126,772

Int. Cl.³ H01R *13/52*

U.S. Cl. 339—60 R **10 Claims**

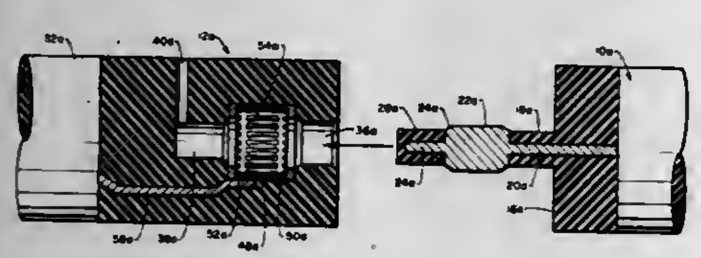

1. An underwater-mateable connector system comprising:

male connector means including

an elongated pin, said pin having an electrical conductor disposed therein, said electrical conductor including a contact portion having its surface exposed intermediate the ends of said pin, said pin having dielectric material disposed surrounding said electrical conductor except where said contact portion is exposed and forming the leading surface of said pin in front of said contact portion and the trailing surface of said pin behind said contact portion;

said pin being circular in cross-section and the leading surface of the pin in front of the contact portion being smaller in diameter than the contact portion;

the leading portion of said pin in front of the contact portion being of substantially uniform cross-sectional area and said contact portion having two sections, a first contact section of substantially uniform cross-sectional area and a second contact section which tapers from the cross-sectional area of the first section to the cross-sectional area of the leading portion of said pin;

female connector means including

a dielectric socket body containing an elongated socket, said socket having a first socket section at the entrance thereof, a second socket section intermediate the ends thereof and a third socket section at the distal end thereof, said socket body having a vent passage communicating between the distal end of said socket and the external environment,

an electrically conducting contact ring disposed in the second socket section of said socket and coupled to an electrical conductor disposed in said socket body, and

an electrically conducting contact band integrally provided with a multiplicity of resiliently deformable louvers disposed within said contact ring in the second socket section of said socket and in electrical contact with said contact ring,

the first socket section being dimensioned to be complementary to the dimensions of the trailing surface of said pin and the third socket section being dimensioned to be complementary to the dimensions of the leading surface of said pin so that interference seals are formed when said connectors are mated, said contact band and the contact portion of said pin being dimensioned so that the contact portion engages said contact band to provide electrical connection between said male connector means and said female connector means when said connectors are mated.

4,299,432
LOCKING ELECTRICAL CONNECTOR APPARATUS

Thomas G. Grau, Morristown, N.J., assignor to Bell Telephone Laboratories, Incorporated, Murray Hill, N.J.

Filed Apr. 3, 1980, Ser. No. 136,779

Int. Cl.³ H01R *13/00*

U.S. Cl. 339—75 M **9 Claims**

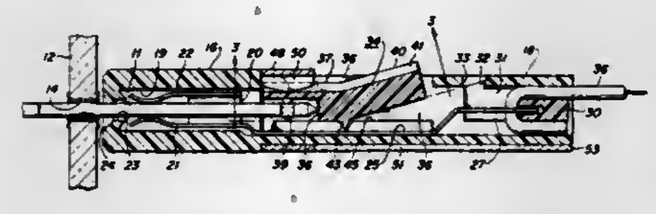

1. Electrical connector apparatus comprising a plurality of terminal pins (11) and a connector (10) having a plurality of receptacles (20) mounted in a housing (16) for receiving respectively said plurality of terminal pins (11) characterized in that said connector (10) has a cavity (26) formed therein having opposite side walls (35, 36) and having an opening on a face of said connector (10), each of said pins (11) extends into said cavity (26) and has a pair of opposing notches (15) formed at the end in said cavity (26) and in a locking mechanism comprising a rocker member (34) disposed in said cavity (26), said member (34) having a first and a second section (37, 40), said first and second sections extending at an angle with each other toward said opening, said first section (37) having a plurality of slots (38) formed therein to correspond respectively with said plurality of terminal pins (11), side walls of each of said slots (38) having opposing teeth (39) adapted to engage said notches (38) and sleeve means (46) slidably operable on the surfaces of said sections (37, 40) of said rocker member (34) facing said opening for pivoting said last-mentioned member and thereby said teeth (39) into and out of engagement with said terminal pin notches (38).

4,299,433
CABLE CONNECTOR

Max L. Jayne, North Warren, Pa., assignor to GTE Products Corporation, Stamford, Conn.

Filed Oct. 3, 1979, Ser. No. 81,606

Int. Cl.³ H01R *13/625*

U.S. Cl. 339—91 R **3 Claims**

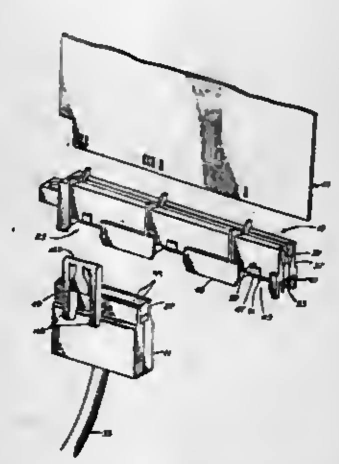

1. An electrical connector for interconnecting a plurality of individual cable conductors with a plurality of contacts interior a receptacle, said receptacle being, of the type having an outwardly projecting flange about said plurality of contacts and including a protrusion on the exterior of said receptacle, said flange having a slot forming a path toward said protrusion, said electrical connector comprising a cover member having a top opening for receipt of a cable therein, an elongated body having a plurality of terminals mounted thereto adapted to engage individual conductors, said elongated body and said cover forming a pluggable portion adapted to mate interior said flange of said receptacle and provide electrical connection of said terminals with said contacts, a latching member projecting below said pluggable portion and adapted to be inserted into the slot when said pluggable portion is mated with said flange, said latching member comprises a pair of arms in substantially parallel alignment projecting outwardly from said pluggable portion, a bar connected between said arms spaced from said pluggable portion, a locking member connected to said bar and extending toward said pluggable portion intermediate said arms, an abrupt recess on said locking member spaced inwardly of said bar, said locking member being adapted to yieldably engage said protrusion and impart cantilever forces to said bar, and said abrupt recess being adapted to snap lock with said protrusion for securing the pluggable portion to the receptacle when said pluggable portion is mated with the interior of said flange.

4,299,434
WATERTIGHT RF CONNECTOR

Asao Ishikawa, 15-2, 3-chome, Higashi, Tokyo, Japan

Continuation of Ser. No. 840,113, Oct. 6, 1977, abandoned. This application Jan. 22, 1979, Ser. No. 5,658

Claims priority, application Japan, Apr. 30, 1977, 52/55560

Int. Cl.³ H01R *4/24, 11/20*

U.S. Cl. 339—96 **9 Claims**

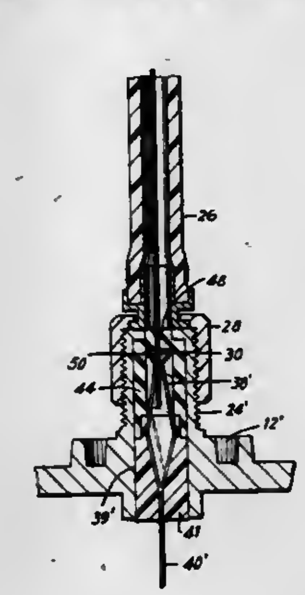

1. In an RF coaxial jack connector of the type used in a coaxial cable television distribution system, said jack connector including a base having at least one tubular shaped jack body extending outwardly therefrom, said jack body having a hollow interior and having an opening at its outwardly extending end, and an electrically conductive split pin disposed within said jack body for enaging a coaxial plug insertably received therein through said opening on said jack body;

the improvement comprising:

a first resilient elastomeric layer affixed to the inner surface of said jack body in sealing relationship therewith,

a portion of said first resilient elastomeric layer being positioned within said jack body to cover said opening at the outwardly extending end thereof for preventing water from entering said jack body through said opening before said coaxial plug is received therein,

said portion of said first resilient elastomeric layer covering said opening being sufficiently thin to be punctured by said coaxial plug when said coaxial plug is inserted into said jack body,

whereby said first resilient elastomeric layer provides a watertight seal for said jack body both before and after said coaxial plug is inserted therein; and

a second resilient elastomeric layer mounted within said jack body beneath said first resilient elastomeric layer and in substantial axial alignment therewith, said second layer being formed complementary to the portion of said split pin surrounded thereby, whereby said second layer supports said split pin and exerts an upward compressive force on saif first resilient elastomeric layer.

4,299,435
FUSE RECEPTACLE

Gordon E. Kaye, Garrison, N.Y., assignor to Duracell International Inc., Bethel, Conn.

Filed Dec. 31, 1979, Ser. No. 108,608

Int. Cl.³ H01H *85/50*

U.S. Cl. 339—150 F **11 Claims**

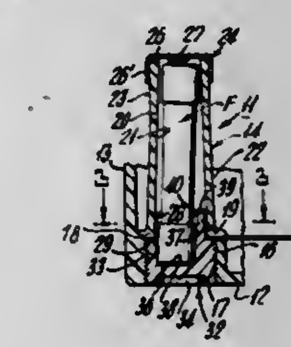

1. A receptacle for replaceably holding a cylindrical fuse having top and bottom terminals comprising a body member having a cavity of circular transverse cross-section extending longitudinally from an open rear end to a front end, a first fixed electrical contact disposed at said cavity front end for making electrical contact with the top terminal of the fuse, a second fixed electrical contact defining ring telescoping said cavity proximate its rear end, said second fixed electrical contact adapted for making electrical contact with the bottom terminal of the fuse, a closure member releasably engaging said cavity rear end and a wedge member carried by and projecting forwardly of said closure member into said cavity and transversely offset from the central longitudinal axis thereof and having a forwardly outwardly inclined inside face, whereby on the engagement of said closure member with said cavity rear end the wedge member longitudinally urges the top terminal of the fuse into electrical contact with the first fixed electrical contact and simultaneously transversely urges the bottom terminal of the fuse into electrical contact with said second fixed electrical contact.

4,299,436
ELECTRICAL CONNECTOR

Daniel W. Ackerman, Binghamton, N.Y., assignor to Universal Instruments Corporation, Binghamton, N.Y.

Filed Feb. 6, 1980, Ser. No. 119,153

Int. Cl.³ H01R *4/48*

U.S. Cl. 339—258 R **3 Claims**

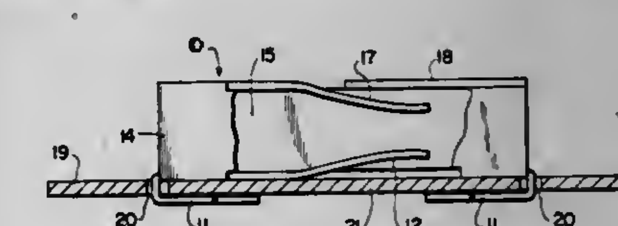

1. A female contact formed of a single piece of metal comprising:

an elongated housing of generally rectangular form;

a pair of tines for securing said contact on a board member, one tine extending from each end of the bottom of said housing;

a generally U-shaped channel, the base of said channel extending transversely across the bottom of said housing, the

legs of said channel extending parallel with and defining the sides of said housing bottom over a portion of its length;

an elongated first tongue member forming a portion of said housing bottom and extending into said channel, said tongue member biased inwardly into said housing;

a pair of housing wall members adjacent said housing bottom and generally perpendicular thereto;

a second tongue member attached only to one of said wall members at one end thereof, said second tongue member forming a portion of the top of said housing and biased inwardly into said housing; and

an ear member forming a second portion of said housing top and attached only to the other of said wall members, said ear member overlying the end portion of said second tongue member to thereby limit the outward movement of said second tongue member upon insertion of a male contact.

4,299,437

COHERENT BEAM SCANNER HAVING A PLANAR HOLOGRAM ILLUMINATED BY A CONVERGENT OR DIVERGENT BEAM

Yuzo Ono, Tokyo, Japan, assignor to Nippon Electric Co., Ltd., Tokyo, Japan

Filed Feb. 5, 1979, Ser. No. 9,720

Claims priority, application Japan, Feb. 3, 1978, 53/11711

Int. Cl.³ G02B *27/17*

U.S. Cl. 350—3.71 **4 Claims**

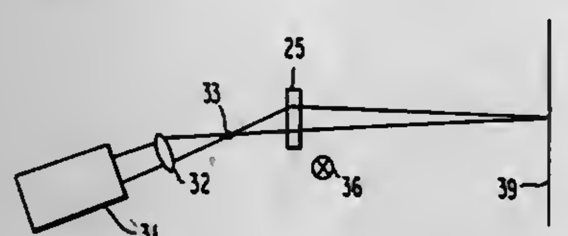

1. A coherent beam scanner for use in combination with a hologram comprising a hologram recording medium having a planar surface on which a fringe pattern is recorded, said fringe pattern being produced by interference on said surface of a first coherent beam divergent substantially from a first point with a second coherent beam that is coherent with said first coherent beam and convergent at a second point, said first point being spaced a first distance from said surface on one side thereof, said second point being spaced a second distance from said surface on the other side thereof, said coherent beam scanner comprising means for carrying said hologram and for moving the carried hologram linearly so as to move the planar surface of the carried hologram along a predetermined plane, a source of a third coherent beam spaced from said predetermined plane to make the fringe pattern of the carried hologram diffract said third coherent beam to converge the diffracted beam along a straight line on the other side of said predetermined plane as the carried hologram moves, and means for receiving the diffracted beam along said straight line.

4,299,438

SCANNING OPTICAL SYSTEM HAVING AT LEAST TWO REFLECTING SURFACES AND AN AFOCAL OPTICAL SYSTEM

Kazuo Minoura, Yokohama, Japan, assignor to Canon Kabushiki Kaisha, Tokyo, Japan

Continuation of Ser. No. 875,103, Feb. 3, 1978, abandoned. This application Apr. 16, 1979, Ser. No. 30,658

Claims priority, application Japan, Feb. 4, 1977, 52-11278

Int. Cl.³ G02B *27/17*

U.S. Cl. 350—6.6 **5 Claims**

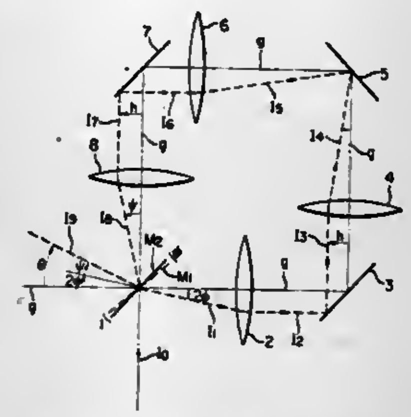

1. A scanning optical system capable of scanning wide angle area, said scanning optical system comprising:

a scanning device having at least two reflecting surfaces thereon; and

a transmission optical system for directing a beam reflected by a first reflecting surface of said scanning device to a second reflecting surface of said scanning device different from said first reflecting surface, said second surface being substantially at the opposite side of said first reflecting surface with respect to the rotational axis of said scanning device, said transmission optical system including means for moving the beam incident upon said second reflecting surface in the opposite direction from the moving direction of said second reflecting surface, means for controlling the angle which the beam incident upon said second reflecting surface makes with the optical axis of said transmission optical system with respect to the angle which the beam reflected by said first reflecting surface makes with the optical axis of said transmission optical system and in the expansion plane which is normal to the deflecting plane of the beam by said first reflecting surface and which include an optical axis, said transmission optical system directing the beam incident upon the second reflecting surface in a path approximately parallel to the beam initially reflected by said first reflecting surface;

said transmission optical system including an afocal optical system having at least a first lens group for receiving the beam reflected by said first reflecting surface and a second lens group for emitting the beam to be directed to said second reflecting surface, said first and second lens groups having substantially the same distortion characteristics.

4,299,439

INTERMEDIATE TUBE AND ELEVATING MECHANISM FOR A MICROSCOPE

Gunnar Strömblad, Göteborg, Sweden, assignor to Carl Zeiss-Stiftung, Oberkochen, Fed. Rep. of Germany

Filed Nov. 27, 1979, Ser. No. 97,846

Claims priority, application Sweden, Nov. 28, 1978, 7812265

Int. Cl.³ G02B *21/00*

U.S. Cl. 350—49 **6 Claims**

1. A viewing accessory for attachment to a microscope having an objective mount and viewing-tube structure removably attachable to said mount and of length to accommodate an intermediate image plane, said accessory comprising a base fitting having means for attachment to the objective mount, and a tubular swing arm one end of which is connected to said base fitting for articulation about a horizontal axis and the other end of which includes means to removably mount the viewing-tube structure, thus interposing said accessory between the objective mount and the viewing-tube structure, optical elements within said swing arm and including a mirror on and tiltable about the swing axis for assuring constant optical-axis alignment and positioning within the swing arm, mechanism reacting between said accessory parts at offset from the swing axis for assuring a divide-by-two relation between angu-

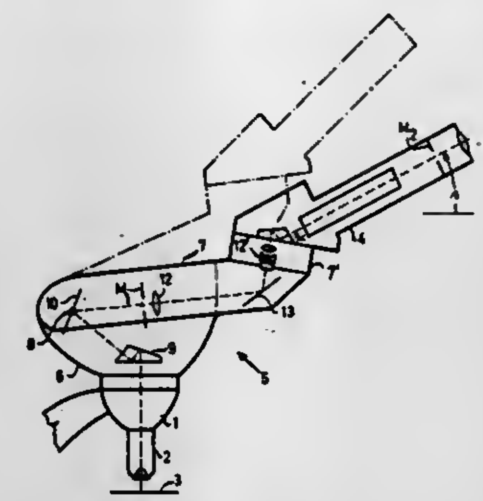

lar-swing displacement of said parts and angular-tilt displacement of said mirror, and said optical elements including lens means to interpose an additional intermediate-image plane in the ray path between the objective and viewing ends of the microscope, said interposed intermediate-image plane being in addition to the first-mentioned intermediate-image plane, whereby an erect image is viewable over a range of elevation-angle adjustment of said swing-arm mounted viewing-tube structure.

4,299,440

MICROSCOPE STAND FOR MICROSCOPE OPTICS AND A MUTUALLY PERPENDICULARLY ADJUSTABLE WORK STAGE IN AN INTERMEDIATE FOCUSING PLANE

R. W. Hodgson, 1680 N. Vine St., #204, Hollywood, Calif. 90028

Filed Feb. 22, 1979, Ser. No. 13,196

Int. Cl.³ G02B *7/00*

U.S. Cl. 350—81 **9 Claims**

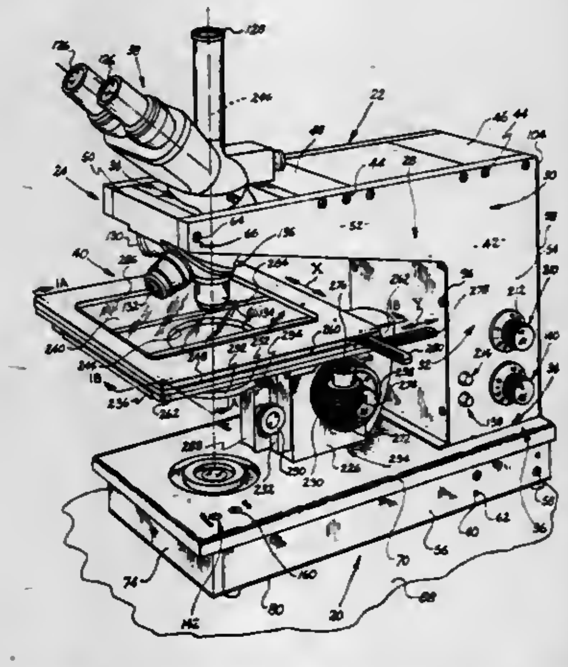

1. An improved microscope stand of a deep-throat, substantially rigid and substantially non-defocusing construction adapted to provide for the controllably positionally adjustable mounting of a large work stage in an intermediate focusing plane relative to microscope optics adapted to be mounted thereabove by said stand and capable of controllable large magnitude movement of such an intermediate work stage in such a focusing plane in mutually perpendicular substantially horizontal x and y directions, comprising: a substantially C-shaped microscope stand means of at least partially hollow construction having a lower substantially horizontally directed base portion, a vertically upwardly spaced substantially horizontally directed upper cantilever supporting arm portion having an outer end provided with microscope-optics-supporting means and an inner or rear end provided and effectively connected rigidly to an upper end of a substantially hollow upstanding interconnecting column portion having a bottom end rigidly connected to an inner or rear end of said base portion, thus defining an extremely rigid substantially C-shaped supporting stand having extremely high values of effective modulus of elasticity and stiffness of said extended microscope-optics-supporting outer end of said upper cantilever supporting arm portion relative to said base portion whereby to minimize relative vertical displacement therebetween as a result of external environmental conditions which normally may produce displacement and consequent defocusing action of microscope optics adapted to be carried by such an upper cantilever supporting arm portion relative to a work stage adapted to be effectively carried by such a base portion in an intermediate focusing plane; said hollow portions of said stand being effectively defined by high-strength outer plates provided with and rigidly fastened together by high-rigidity close-tolerance mechanical fastener means of close fitting male and female paired element construction rigidly fastening said outer plates together in a manner defining a hollow interior and whereby to provide said effective C-shaped stand in a construction of minimal weight and maximum stiffness having an effectively maximized strength-to-weight and stiffness-to-weight ratio; and intermediate horizontal focusing plane stage means provided with and mounted upon and above an underlying stage-supporting and x and y plane position-adjusting means effectively attached to and rigidly supported by said base portion in a manner spaced substantially above said base portion and substantially below said upper cantilever supporting arm portion at an intermediate location therebetween, said x and y plane position-adjusting means being manually operable to move the work stage horizontally in mutually-perpendicular substantially horizontal x and y directions.

4,299,441

TRANSPARENT LABORATORY SLIDE FOR EXAMINATION OF LIQUID SPECIMENS

James E. Parker, Long Beach, Calif., assignor to ICL/Scientific, Fountain Valley, Calif.

Filed May 23, 1979, Ser. No. 41,753

Int. Cl.³ G02B *21/34*; B29F *1/00*

U.S. Cl. 350—95 **18 Claims**

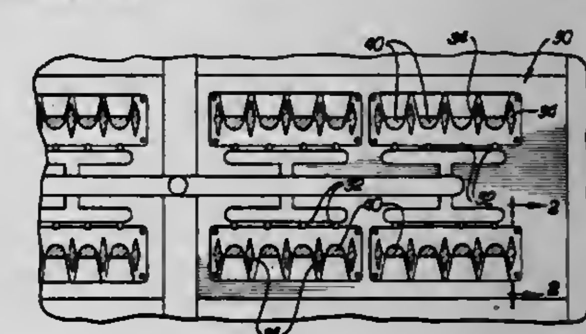

1. In a plate slide of the type for use in the examination of liquid specimens of urine, spinal fluid, sputum, blood, or the like, having an elongated rectangular plate having flat upper and lower surfaces, a front and a rear longitudinal edge, at least one open faced transparent examination chamber disposed along a longitudinal edge of said plate, said chamber opening toward one edge of said plate and being defined by top and bottom chamber walls, which are generally parallel to each other and to said upper and lower surfaces of said plate, and an

edge wall extending around the chamber from one open side to the other open side thereof, and at least one channel having a bottom wall and side walls, said channel extending from each of said open sides of said chamber across the plate and opening along one edge of said plate, the improvement comprising:
means integral with the plate for ensuring adequate spacing from adjacent slides when multiple slides are stacked adjacent to one another; and
a plate surface having a plurality of symmetrically configured recesses that are recessed through a substantial proportion of the thickness of said slide;
and wherein the recesses are diamond shaped and lie adjacent the channel side walls.

4,299,442
AIRCRAFT VISUAL COLLISION AND AVOIDANCE DEVICE
Arthur L. Buckelew, 977 Jeannett Ave., Thousand Oaks, Calif. 91360
Filed Apr. 14, 1980, Ser. No. 140,002
The portion of the term of this patent subsequent to Mar. 17, 1998, has been disclaimed.
Int. Cl.³ G02B *5/12*
U.S. Cl. 350—97 **12 Claims**

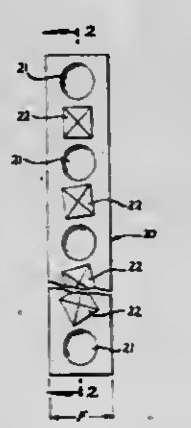

4. A "see and be seen" device capable of being disposed on various portions of an aircraft, capable of receiving light from any direction and for reflecting it outward in many directions comprising:
(a) a first reflecting means, having formed therein, an array of concave circular identations for serving as a lens means for intensifying and directing said light outward in many directions;
(b) a second reflecting means comprising an array of pyramid shaped elements disposed adjacent to and between said concave circular indentations for receiving light from any direction and for reflecting and redirecting light toward at least one of said concave circular identations;
whereby, the reflected light causes said aircraft to be visually identified and located by any other aircraft pilots in the vicinity.

4,299,443
APPARATUS FOR DETECTING THE DEFECTS OF A PATTERN WITH DIRECTIONAL CHARACTERISTICS USING A FILTER HAVING ARM SECTIONS OF CURVED SHAPE
Masana Minami, Kawasaki, and Hidekazu Sekizawa, Yokohama, both of Japan, assignors to Tokyo Shibaura Electric Co., Ltd., Kawasaki, Japan
Continuation-in-part of Ser. No. 752,984, Dec. 21, 1976, Pat. No. 4,153,336. This application Mar. 22, 1979, Ser. No. 22,842
Claims priority, application Japan, Dec. 22, 1975, 50/151951
Int. Cl.³ G02B *27/38;* G01N *21/00*
U.S. Cl. 350—162 SF **16 Claims**

1. An apparatus for detecting defects in a pattern having linear straight line features and nonlinear defects comprising:
(a) a coherent light source for radiating coherent light;
(b) a collimator for collimating the coherent light radiated from said coherent light source into a light beam with a predetermined diameter and for directing it to said pattern;
(c) a transform lens for transforming the intensity distribution of transmitted or reflected light from said pattern into a Fourier-transformed pattern; and
(d) a spatial filter placed in the Fourier-transform plane of said transform lens which prevents transmission of the

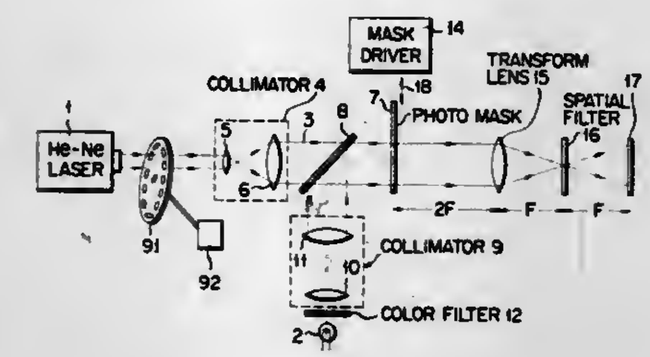

coherent light containing information of said linear straight line features of said pattern, said filter having a light intercepting area including a plurality of arm sections extending in the horizontal and vertical directions from a common point of intersection corresponding to the linear straight line features of said subject pattern and a portion lying between the two adjacent arm sections being of a circular shape protruding toward the center of said filter wherein the coherent light intercepting area of said spatial filter is defined according to the following four equations

$$\begin{cases}\left(X-\frac{L}{2}\right)^2+\left(Y-\frac{L}{2}\right)^2 \geqq R^2\\ 0 \leqq X \leqq \frac{L}{2},\ 0 \leqq Y \leqq \frac{L}{2}\end{cases}$$

$$\begin{cases}\left(X+\frac{L}{2}\right)^2+\left(Y-\frac{L}{2}\right)^2 \geqq R^2\\ -\frac{L}{2} \leqq X \leqq 0,\ 0 \leqq Y \leqq \frac{L}{2}\end{cases}$$

$$\begin{cases}\left(X+\frac{L}{2}\right)^2+\left(Y+\frac{L}{2}\right)^2 \geqq R^2\\ -\frac{L}{2} \leqq X \leqq 0,\ -\frac{L}{2} \leqq Y \leqq 0\end{cases}$$

$$\begin{cases}\left(X-\frac{L}{2}\right)^2+\left(Y+\frac{L}{2}\right)^2 \geqq R^2\\ 0 \leqq X \leqq \frac{L}{2},\ -\frac{L}{2} \leqq Y \leqq 0\end{cases}$$

where X and Y indicate the X-axis and Y-axis of said filter respectively, said X- and Y-axes corresponding to the respective axes of the arm sections of said filter extending in the horizontal and vertical directions, $X=Y=0$ is indicative of the center of said filter and, in the situation where the effective pupil is circular, $9\sqrt{2}/32\ L\times 0.85 \leqq R \leqq 9\sqrt{2}/32\ L\times 1.05$ where L is a diameter of an effective pupil of the lens or in the situation where the effective pupil is square $\sqrt{2}/4\ L\times 0.85 \leqq R \leqq \sqrt{2}/4\ L\times 1.05$ where L is a length of each side of an effective pupil of the lens.

4,299,444
DIMMABLE REAR VIEW MIRROR, PARTICULARLY FOR AUTOMOTIVE VEHICLES
Horst Römer, Eppstein, Fed. Rep. of Germany, assignor to VDO Adolf Schindling AG, Frankfurt am Main, Fed. Rep. of Germany
Filed Aug. 7, 1980, Ser. No. 175,971
Claims priority, application Fed. Rep. of Germany, Aug. 25, 1979, 2934451
Int. Cl.³ G02B *17/00;* B60R *1/04*
U.S. Cl. 350—278 **10 Claims**

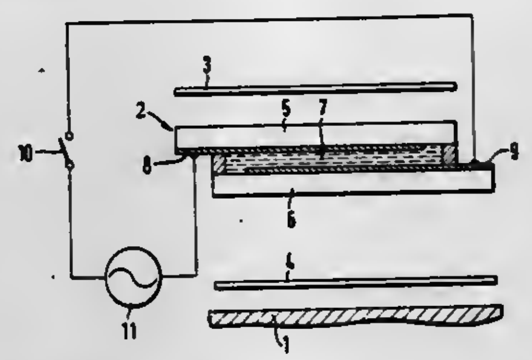

1. A dimmable rearview mirror, particularly for motor vehicles, comprising
a mirror reflective surface constituting a mirror,
a liquid crystal cell covered adjacent a rear side thereof by said reflective surface;
two polarization filters spaced apart from each other,
said liquid-crystal cell being disposed between said two polarization filters,
said liquid-crystal cell includes cell glasses, a liquid-crystal substance enclosed by said cell glasses, and electrodes disposed on said cell glasses,
said electrodes cover substantially the entire surface of said liquid crystal cell next to said liquid-crystal substance,
means including a source of voltage connected to said electrodes for adjusting the degree of reflection of the rearview mirror in the area of the reflective surface,
a display surface at least alongside of said reflective surface formed by one part of the liquid-crystal cell for displaying characters and symbols.

4,299,445
ADJUSTABLE FOCUSING MIRROR
Lucien Ancouturier, Le Vesinet, France, assignor to SEMED, Nanterre, France
Filed Sep. 12, 1979, Ser. No. 74,797
Claims priority, application France, Sep. 20, 1978, 78 26965; Jan. 2, 1979, 79 00036
Int. Cl.³ G02B *5/10*
U.S. Cl. 350—295 **27 Claims**

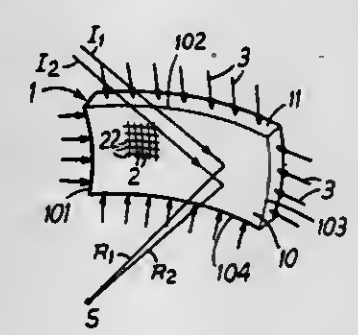

1. An adjustable focusing mirror, comprising a support on which is mounted a plurality of small plane mirror elements, wherein the support of the focusing mirror comprises a molded concrete structure with a reference face on which the small plane mirror elements are adhesively fixed, at a small distance from one another, but without any contact between them, and wherein the molded concrete structure is fitted with pre-stressing elements for adjusting the concavity of the said reference face carrying the mirror elements.

4,299,446
COMPOUND ANAMORPHIC MIRROR AND FRAME FOR OFF-AXIS REFLECTED IMAGE MODIFICATION
Harry H. Jenkins, Jr., Menlo Park, Calif., assignor to Atari, Inc., Sunnyvale, Calif.
Filed Nov. 5, 1979, Ser. No. 91,629
Int. Cl.³ G02B *5/10*
U.S. Cl. 350—296 **11 Claims**

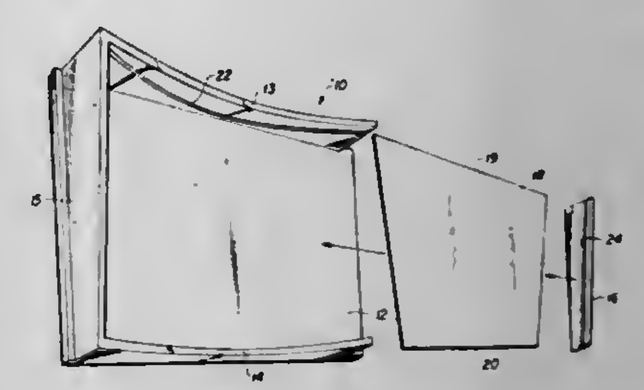

1. Apparatus for providing an anamorphic mirror which reflects an image from an off-axis curved source such as a CRT display so that the reflected image is expanded toward the sides to simulate a wide field and presents a one dimensional infinity effect, said apparatus comprising:
a frame having top and bottom portions defining first and second inwardly directed continuous grooves curved concavely along the top and bottom portions of the frame, respectively, said first and second grooves defining first and second conic sections with foci of different magnitudes; and
a flexible reflective element which is flat and has a trapezoidal shape widest at the top in its unflexed configuration, said element being flexed into a curved shape and inserted into the grooves in the frame to provide a reflector having the desired reflection characteristics.

4,299,447
LIQUID CRYSTAL FIBER OPTICS LARGE SCREEN DISPLAY PANEL
Parviz Soltan, San Diego, and Paul C. Fletcher, El Cajon, both of Calif., assignors to The United States of America as represented by the Secretary of the Navy, Washington, D.C.
Filed Jun. 27, 1979, Ser. No. 52,649
Int. Cl.³ G02F *1/133*
U.S. Cl. 350—334 **3 Claims**

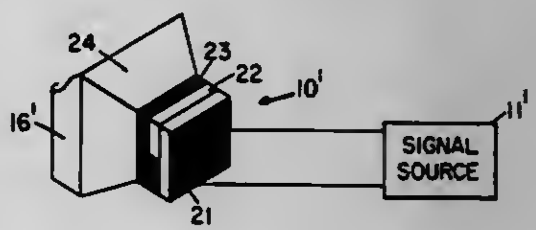

1. In an apparatus having a reflective surface on one side of a liquid crystal panel to function in a reflective mode through a diffuse screen for displaying a plurality of alphanumeric characters and graphic information thereon, an improvement therefor is provided comprising:
a plurality of liquid crystal cells located behind the screen, the liquid crystal cells being adjacent to thin film transistor layers to form liquid crystal panels, and
a fused block of tapered optical fibers extending between each liquid crystal panel and the diffuse screen, the fused

blocks of tapered optical fibers form the front plates of the liquid crystal cells and the light is transmitted through the fused blocks of tapered optical fibers, through the liquid crystal cells, then is reflected by the reflecting surface and then is transmitted back through the liquid crystal cells, the fused blocks of tapered optical fibers and the diffusing screen for transmitting lighted alphanumeric and graphic information to effect an expansion of the information.

4,299,448
ACOUSTO-OPTIC DEVICE
Cestmir Barta; Jiri Ctyroky, both of Prague, Czechoslovakia; Iraida M. Silvestrova, and Jurij V. Pisarevskij, both of Moscow, U.S.S.R., assignors to Ceskoslovenska akademie ved, Prague, Czechoslovakia and Akademia Nauk, Moscow, U.S.S.R.
Filed Dec. 13, 1978, Ser. No. 968,930
Claims priority, application Czechoslovakia, Dec. 20, 1977, 8568/77
Int. Cl.³ G02F *1/29*
U.S. Cl. 350—358 5 Claims

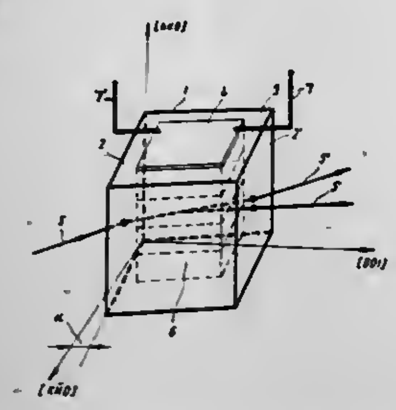

1. An acousto-optic device comprising a single crystal of pure or mixed univalent mercury halide, having a first face provided with a source of acoustic waves, a pair of opposed faces polished for the entrance and exit of light waves, one of said polished faces being perpendicular to a direction which is inclined from the direction of the optical axis of the crystal and is rotated about the crystallographic direction, by a predetermined angle from the crystallographic direction, [KHO] said angle being between 0.10° and 15.0° and said first face making an angle of 90° with said one polished face.

4,299,449
ACOUSTOOPTIC MODULATOR
Yoshinori Ohta, Tokyo, Japan, assignor to Nippon Electric Co., Ltd., Tokyo, Japan
Filed Jul. 12, 1979, Ser. No. 57,150
Claims priority, application Japan, Jul. 12, 1978, 53-85500; Jul. 12, 1978, 53-85509
Int. Cl.³ G02F *1/11*
U.S. Cl. 350—358 9 Claims

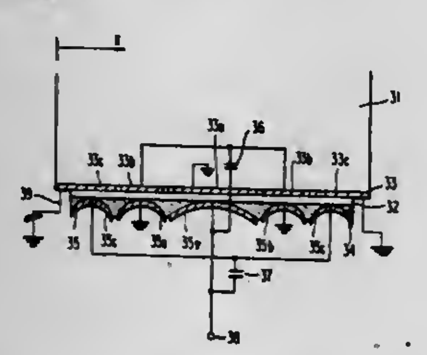

1. An acoustooptic modulator comprising:
an acoustooptic medium having a first face, a second face, and a third face intersecting said first and second faces, said acoustooptic medium receiving incident light at said first face, diffracting said incident light in accordance with strains generated in said medium by acoustic waves as said incident light passes through said medium in a light passing direction from said first face to said second face, and providing a diffracted light output from said second face, said medium having a central portion;
a transducer, including a plurality of transducer portions, coupled to said third face for generating said acoustic waves in respective portions of said medium in accordance with excitation signals to thereby generate said strains in said medium; and
excitation means for exciting adjacent transducer portions with opposite phases and differing amplitudes to thereby generate strains of opposite phases and differing amplitudes in said medium, the amplitude of the strain generated in the central portion of said medium being larger than in the remaining portion of said medium.

4,299,450
ELASTOMER DISPLAY
Fumiaki Funada, Yamatokoriyama; Toshiaki Takamatsu, Nara, and Shigehiro Minezaki, Ikoma, all of Japan, assignors to Sharp Kabushiki Kaisha, Osaka, Japan
Filed Aug. 14, 1979, Ser. No. 66,320
Claims priority, application Japan, Aug. 18, 1978, 53-101192; Aug. 23, 1978, 53-103217
Int. Cl.³ G02F *1/29*
U.S. Cl. 350—360 12 Claims

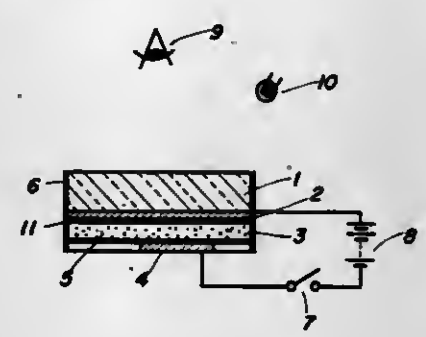

1. A fluorescent elastomer display system comprising: a transparent silicon elastomer sandwiched in between an electrode configuration connected to a voltage source for producing a non-uniform electric field across said elastomer, and fluorescent centers dispersed within said transparent elastomer.

4,299,451
MINIMUM RESOLVABLE CONTRAST MEASUREMENT DEVICE
Harry L. Task, Montgomery County, and Gilbert G. Kuperman, Green County, both of Ohio, assignors to The United States of America as represented by the Secretary of the Air Force, Washington, D.C.
Filed Apr. 15, 1980, Ser. No. 144,465
Int. Cl.³ G02B *27/18*; G02F *1/01*; G03B *27/72, 21/00*
U.S. Cl. 350—407 2 Claims

1. An apparatus for detecting the minimum contrast resolution of a video sensor or the like, alone or in conjunction with a human observer, through generating patterns in a uniform luminance background and varying their contrast without altering the background luminance, comprising:
a first source for generating a uniform and unpolarized beam of luminous energy which is adjustable as to intensity;
a second source for generating a spatially patterned and unpolarized beam of luminous energy which is adjustable as to intensity and intersects said beam of said first source;
a video sensor or the like displaced from, but optically aligned with, one of said first and second sources;
a detector system displaced from, but optically aligned with, the other of said first and second sources;
means for focusing the beam of said one of said sources so as

to form an image thereof at an input of said video sensor and for focusing the beam of said other of said sources so as to form an image thereof at an image plane of said detector system;
a linear polarizer disposed in the path of each source beam, said polarizers being orthogonally oriented relative to each other;
means at the location of intersection of said beams of said first and second sources for receiving said source beams after their polarization, splitting the source beams into components substantially equal in background and pattern luminance, interlacing the split components, and transmitting respective beams of said interlaced components to said video sensor and said detector system;
a rotatable linear polarizer disposed in the path of each respective beam of said interlaced components being transmitted to said video sensor and said detector system, said rotatable polarizers being synchronized together in their orientations; and
said detector system including

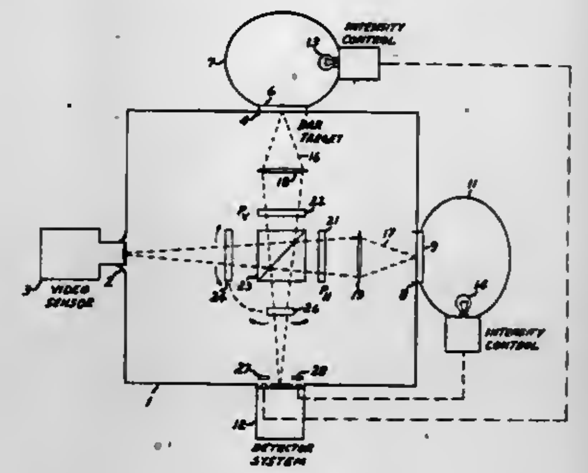

a pair of spaced apart background luminance sensors positioned at the image plane of said detector system in unpatterned background regions of the spatially patterned image focused thereat for detecting source beam intensity and regulating the same to compensate for drift in the generation thereof,
a pair of linear polarizers orthogonally oriented relative to each other, each polarizer positioned adjacent one of said background luminance sensors in the path of one beam of said interlaced components for decoupling the background luminance to insure that the drift compensation is made to the corresponding beam generating source, whereby a constant background luminance may be maintained, and
a detector array positioned at the image plane of said detector system adjacent said pair of background luminance sensors but in contrasting regions of the spatially patterned image focused thereat for measuring luminance amplitude in said contrasting regions of said image for ascertaining minimum contrast resolution of the spatially patterned image also focused at said input of said video sensor.

4,299,452
ZOOM LENS HAVING TWO MOVABLE LENS GROUPS
Keiji Ikemori, Yokohama, Japan, assignor to Canon Kabushiki Kaisha, Tokyo, Japan
Filed Apr. 24, 1978, Ser. No. 898,807
Claims priority, application Japan, Apr. 25, 1977, 52-47572
Int. Cl.³ G02B *15/16*
U.S. Cl. 350—426 6 Claims

1. A zoom lens having two movable lens groups comprising:
a front lens group having a negative refracting power, being movable along the axial direction and consisting of a negative meniscus lens with a surface convex to the object, a negative lens with a surface concave to the image, and a positive lens with a surface convex to the object, in the aforementioned order, and
a rear lens group having a positive refracting power, being movable along the axial direction simultaneously with the

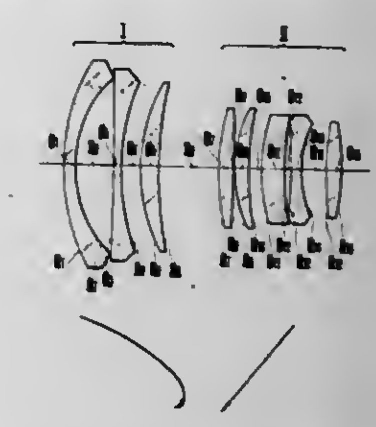

front lens group and having two positive lenses with a surface convex to the object, a positive meniscus lens with a surface convex to the object, a negative lens with a surface concave to the image, and a positive lens,
whereby the following relations are satisfied

$$0.68 < \frac{|Fl|}{Ft} \leq 1$$

$$0.1 < \frac{Et}{Ft} < 0.31$$

$$2.4 < \frac{fb}{fa} < 6$$

wherein
Fl: focal length of the front lens group
Ft: longest focal length of the zoom lens
Et: distance between the secondary principle point of the front lens group and the primary principle point of the rear lens group when the focal length of the zoom lens is Ft.
fa: focal length of the two positive lenses in the rear lens group.
fb: focal length of the positive meniscus lens in the rear lens group.

4,299,453
ZOOM LENS SYSTEM WITH MOVABLE DIAPHRAGM
Kikuo Momiyama, Yokohama, and Shigeru Kamata, Tokyo, both of Japan, assignors to Canon Kabushiki Kaisha, Tokyo, Japan
Filed Jul. 5, 1979, Ser. No. 55,073
Claims priority, application Japan, Jul. 6, 1978, 53-82280
Int. Cl.³ G02B *15/14*
U.S. Cl. 350—426 9 Claims

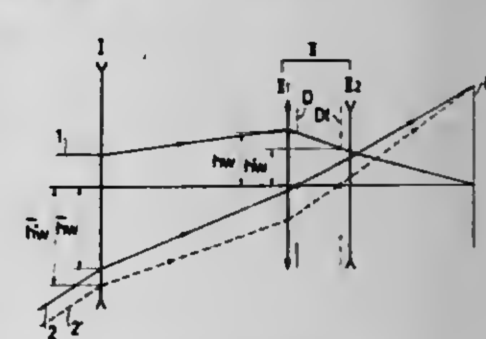

1. A zoom lens system comprising:
a front lens group;
a rear lens group being arranged closer to the image side than said front lens group and comprising first and second sub-groups separated from each other with an air-gap;

a diaphragm arranged between said first and second subgroups for determining the F-number of said zoom lens system; and

control means for driving the front and the rear lens groups independently from each other along the optical axis during zooming and for driving said diaphragm along the optical axis relative to said rear lens.

4,299,454

WIDE ANGLE TO LONG FOCUS ZOOM LENS

Ellis Betensky, Tel Aviv, Israel, assignor to Vivitar Corporation, San Francisco, Calif.

Continuation-in-part of Ser. No. 941,430, Sep. 11, 1978, abandoned. This application Sep. 5, 1979, Ser. No. 70,749

Int. Cl.^{3} G02B *15/18*

U.S. Cl. 350—427 35 Claims

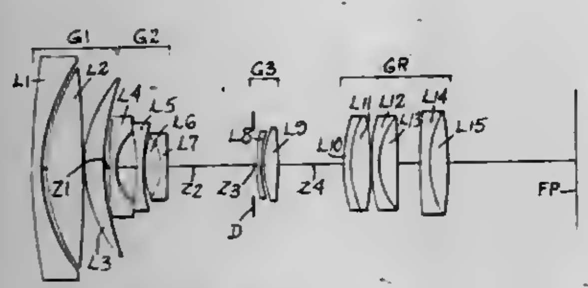

1. A lens having a range of equivalent focal lengths extending from a dimension below the diagonal of the image frame of the lens to above, comprising from the object end a first positive group, a second negative group, and a rear positive group, at least two of said groups including said negative group being axially movable to vary the equivalent focal length of said lens, said second negative group comprising from the object end first and second negative components and a positive doublet, said doublet being convex to the object side.

4,299,455

VISION TESTING INSTRUMENT

Mitsugu Aoki; Yoshinori Oana; Yasuo Kato, and Taketoshi Ishihara, all of Tokyo, Japan, assignors to Tokyo Kogaku Kikai Kabushiki Kaisha, Tokyo, Japan

Filed Apr. 21, 1980, Ser. No. 142,230

Claims priority, application Japan, Apr. 27, 1979, 54-52242

Int. Cl.^{3} A61B *3/02*

U.S. Cl. 351—30 9 Claims

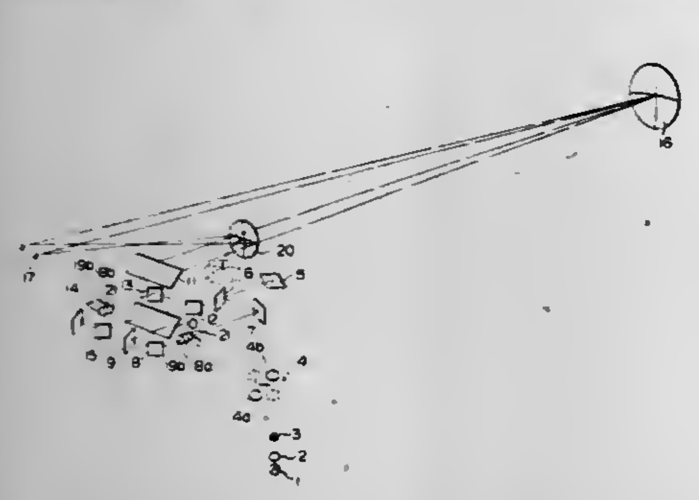

1. A vision testing instrument comprising a light source, a chart projecting optical system for projecting a testing chart, first focusing reflective means provided in said chart projecting optical system for producing a chart image at a far point for a far point view test, second focusing reflective means retractably positioned in said chart projecting optical system between said light source and said first focusing reflective means for producing a chart image at a near point, lens means adapted to be inserted into said chart projecting optical system when said second focusing reflective means is in said chart projecting optical system so that the chart image is focused at said near point, said lens means being adapted to be retracted when said second focusing reflective means is retracted from the chart projecting optical system.

4,299,456

EYEGLASS FRAME WITH SUPPORT FOR TEMPLE CONNECTION

Charles I. Solomon, P.O. Box 12495, San Antonio, Tex. 78125

Filed Feb. 7, 1980, Ser. No. 119,536

Int. Cl.^{3} G03B *17/46, 21/18, 41/10, 3/00*

U.S. Cl. 351—121 4 Claims

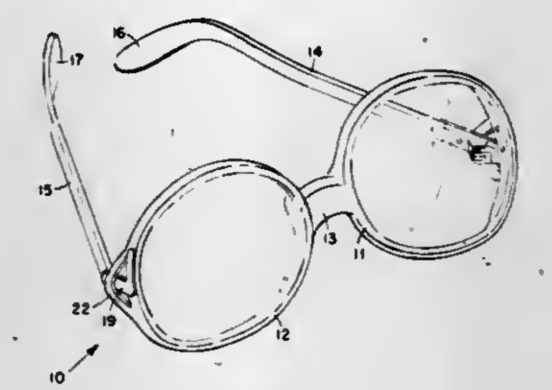

1. An eyeglass frame comprising:

a. a pair of lens rings, said rings having at least one loop extending rearward from the outer perimeter of said lens rings and generally perpendicular to said lens rings;

b. a nose bridge connecting said pair of lens rings;

c. temple hinge mounts secured to said lens rings and extending through at least one loop of said lens rings;

d. temple means secured to said temple hinge mounts, said temple hinge mounts and said temple means connected thereto forming a pivot point, said pivot point being supported, reinforced by and extending through said loops extending rearward from said lens rings.

4,299,457

CAMERA

Pierre-Francois Ducommun, Grandson, Switzerland, assignor to Bolex International SA, Yverdon, Switzerland

Filed Oct. 13, 1979, Ser. No. 89,811

Claims priority, application Switzerland, Nov. 7, 1978, 11443/78

Int. Cl.^{3} G03B *3/00*

U.S. Cl. 352—140 11 Claims

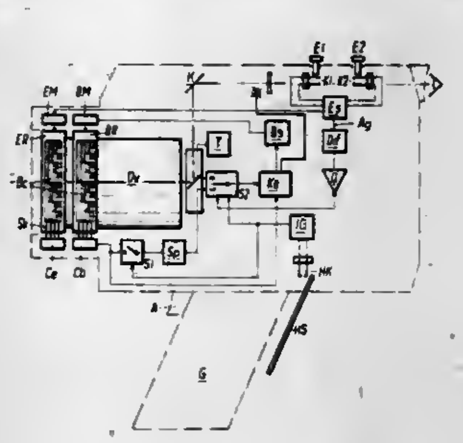

1. In a camera having an objective lens, a distance setting device and a focal length setting device as well as a testing device for determining the difference between the distance set on the objective lens and the distance away of the object, by which testing device, when the two distances do not agree, a difference signal is producable, the value of which is dependent, for constant distances, on the focal length for which the objective lens is set, the improvement comprising

program control means;

switch means for actuating said program control means;

said program control means including a memory, and said control means:

during a first phase of its operation, for storing the focal length of the objective lens in said memory;

in a second phase, for setting the focal length via the focal length setting device to a value for which the difference signal of the testing device is a maximum for constant distance conditions,

in a third phase, for permitting setting of the distance on the objective lens manually or automatically; and

in a final phase, for setting the focal length of the lens back to the focal length which was originally stored.

4,299,458

SELF THREADING PHOTOTYPESETTER TRANSPORT SYSTEM

John S. Burton, Los Angeles, Calif., assignor to Autologic, Inc., Calif.

Filed Jun. 2, 1980, Ser. No. 155,455

Int. Cl.^{3} G03B *15/00, 17/26;* B41B *19/00*

U.S. Cl. 354—6 48 Claims

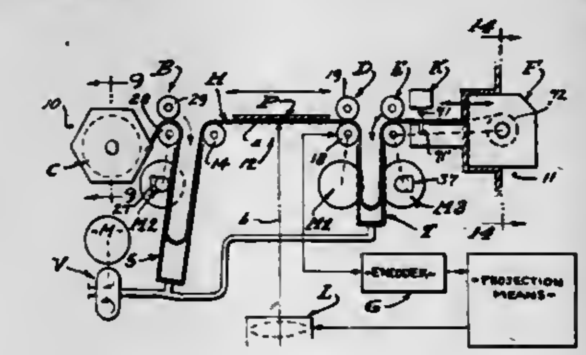

1. A transport system for "leading" and "reverse leading" light sensitive roll film media through a make-up area of a phototypesetter, and including;

a forwardly feeding media supply means at the input side of a light obscuring housing,

an upwardly open supply pocket receiving media at the input side of the housing and comprised of transverse front and back walls coextensively engageable with the width of the media and opposite side walls engageable with the opposite edges thereof and a bottom wall closing the same establishing a vacuum chamber beneath a supply loop of media formed therein,

an upwardly open take-up pocket spaced forwardly from the supply pocket with the make-up area extending therebetween and comprised of transverse front and back walls coextensively engageable with the width of media and opposite side walls engageable with the opposite edges thereof and a bottom wall closing the same establishing a vacuum chamber beneath a take-up loop of media formed therein,

exposure means transversely coextensive or of the make-up area,

a vacuum means drawing air from the supply and take-up pockets to draw respective supply and take-up loops of media therein and tensioning the media in a focal plane as it extends through the make-up area,

reversible drive means at the input side of the take-up pocket and transporting the media through the make-up area between the supply pocket and take-up pocket,

and a take-up means at the output side of the take-up pocket and transmitting media to and from the take-up pocket.

4,299,459

DIAPHRAGM CONTROL CIRCUIT FOR CAMERA

Kazunori Mizokami, Hachioji, Japan, assignor to Olympus Optical Company, Ltd., Shibuya, Japan

Filed Jul. 28, 1980, Ser. No. 172,663

Claims priority, application Japan, Aug. 22, 1979, 54/115392[U]

Int. Cl.^{3} G03B *7/097*

U.S. Cl. 354—23 D 7 Claims

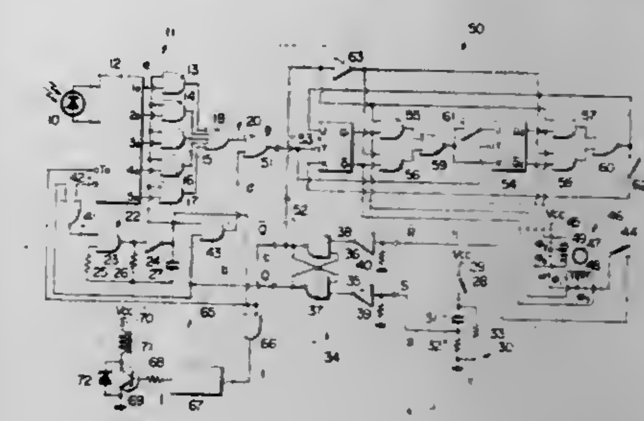

1. A diaphragm control circuit for a camera, comprising

a stepping motor interlocked with a diaphragm mechanism of a camera to allow the latter to establish a diaphragm aperture in accordance with an angle of rotation thereof,

a clock pulse generator for producing a drive pulse which enables said motor to be rotated either in a forward or reverse direction,

a motor energization distributor for distributing said drive pulse to a plurality of exciting coils of said motor,

a release circuit responsive to a shutter release operation for producing a release signal which causes said motor to rotate in reverse to return said motor to its initial position,

a direction of rotation command circuit for controlling the direction in which said motor is rotated by applying a direction command signal to a direction command terminal of said distributor, said command circuit being responsive to said release signal to cause said motor to rotate in reverse,

a reset means responsive to said release signal for applying a reset signal to said command circuit by detecting that said motor has been rotated in reverse stepwise to its initial position, said command circuit causing said motor to rotate in a forward direction in response to said reset signal,

a diaphragm presetting circuit responsive to said reset signal for allowing said drive pulse to be fed to a pulse input terminal of said distributor for a time duration which corresponds to the amount of light reflected by an object being photographed, and

a shutter drive circuit for causing a shutter to be released after a desired diaphragm aperture has been set as a result of a forward rotation of said stepping motor in response to the application of said drive pulse thereto through said distributor for said duration.

4,299,460

AUTOMATIC FOCUSING UNIT FOR CAMERA

Iwao Hasegawa, Tokyo, Japan, assignor to Osawa Precision Industries, Ltd., Tokyo, Japan

Filed Nov. 18, 1980, Ser. No. 207,867

Claims priority, application Japan, Nov. 27, 1979, 54-163223[U]

Int. Cl.^{3} G03B *3/10*

U.S. Cl. 354—25 3 Claims

1. An automatic focusing unit for a camera adapted to be detachably mounted on said camera which includes a focusing tube which is adjustable to focus a photographic lens on an object to be photographed, comprising a housing, a lens posi-

tion detector which is urged to project outwardly from said housing and come into contact with said focusing tube to detect the position of said photographic lens when said unit is mounted on said camera, said lens position detector being withdrawn into said housing against an urging force when an

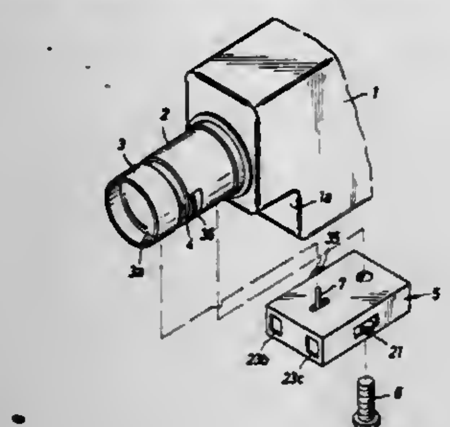

external force is exerted thereon, and an automatic focusing module for producing a focusing signal in response to the position of said lens position detector depending upon a distance to said object to be photographed to control said photographic lens for automatic focusing.

4,299,461
EXPOSURE AND FLASH FIRE CONTROL SYSTEM
Richard J. Coppa, Westwood; James K. Lim, Somerville; John C. Ostrowski, Maynard, and Marie T. Rodriguez, Somerville, all of Mass., assignors to Polaroid Corporation, Cambridge, Mass.
Filed Mar. 31, 1980, Ser. No. 135,512
Int. Cl.³ G03B *7/091, 15/05*
U.S. Cl. 354—27 **17 Claims**

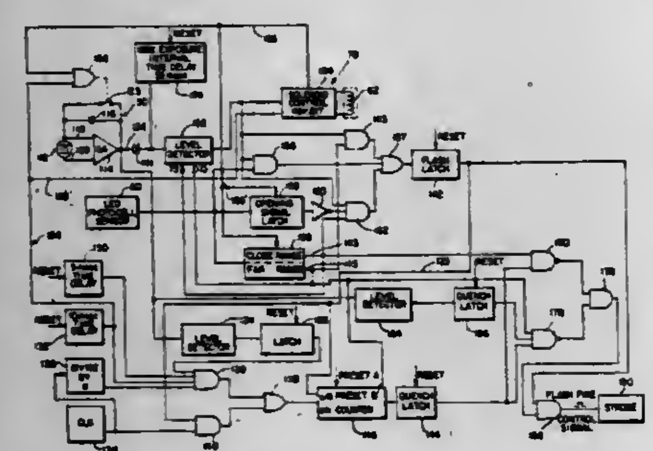

1. A photographic camera for use with a variable output source of artificial illumination and including means for defining a film plane and means for transmitting light from a scene along an optical path to expose photosensitive film located in the film plane, said camera comprising:
a ranging mechanism comprising at least one member disposed for movement in general correspondence with the camera-to-subject distance;
a blade mechanism;
means for mounting said blade mechanism for displacement from an initial closed arrangement wherein said blade mechanism precludes scene light from being transmitted along the optical path to the film plane to an open arrangement wherein said blade mechanism defines a maximum size aperture so as to allow the passage of scene light along the optical path to the film plane and then to a final closed arrangement wherein said blade mechanism again precludes scene light from being transmitted along the optical path to the film plane;
drive means responsive to the actuation thereof for effecting the displacement of said blade mechanism from its said initial closed arrangement to its said open arrangement and then into its said final closed arrangement to define an exposure interval during which scene light is incident upon the film plane; and
control means responsive to the movement of said ranging mechanism member by a distance corresponding to a camera-to-subject distance less than a selected camera-to-subject distance for providing a flash fire signal during the exposure interval to ignite the source of artificial illumination to provide a determinate amount of artificial illumination, wherein the exposure is controlled primarily by varying the aperture size at which the flash fire signal is provided, said control means being further responsive to the movement of said ranging mechanism member by a distance corresponding to a camera-to-subject distance greater than said selected camera-to-subject distance for providing a flash fire signal during the exposure interval wherein the exposure is controlled primarily by varying the amount of artificial illumination.

4,299,462
VIEW FINDER DEVICE HAVING LIQUID CRYSTAL CELL
Ryoichi Suzuki, Kawasaki; Seiichi Matsumoto, Yokohama; Takashi Amikura, Tokyo; Tokuichi Tsunekawa, and Takashi Uchiyama, both of Yokohama, all of Japan, assignors to Canon Kabushiki Kaisha, Tokyo, Japan
Continuation of Ser. No. 712,344, Aug. 6, 1976, Pat. No. 4,140,378. This application Aug. 7, 1978, Ser. No. 931,532
Claims priority, application Japan, Aug. 9, 1975, 50/96912; Aug. 9, 1975, 50/96914; Mar. 11, 1976, 51/27980; Mar. 24, 1976, 51/32286; Mar. 24, 1976, 51/32287; Mar. 30, 1976, 51/34792
Int. Cl.³ G03B *17/20;* **G02F** *1/13*
U.S. Cl. 354—53 **14 Claims**

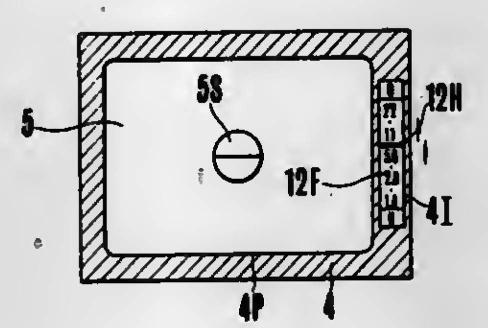

1. A display device for a camera comprising:
a liquid crystal cell including:
(1) a first base plate having a surface
(2) a second base plate having a surface facing said first base plate;
(3) a resistance layer on the surface of said first base plate;
(4) a first conductive layer on the surface of said first base plate, connected in series with said resistance layer;
(5) a second conductive layer at the surface of said second base plate, the surface of the second conductive layer being positioned to face the total surface of the series connected resistance layer and first conductive layer;
(6) a liquid crystal sandwiched between the surfaces of said base plate:
voltage applying means for applying a predetermined voltage across said resistance layer and the series connected first conductive layer; and
means for applying a voltage corresponding to the photographic information to said second conductive layer on the second base plate so as to form a display with a pointer at a predetermined position on the surface of the cell corresponding to photographic information and at the same time to place the surface position of the cell facing the total surface of the first conductive layer in a display state and thus produce a warning display at a time when a voltage corresponding to photographic information reaches a value corresponding to a potential of the first conductive layer.

4,299,463
DISPLAY DEVICE FOR CAMERA
Masaharu Kawamura, Kawasaki, and Yoshihiro Shigeta, Tokyo, both of Japan, assignors to Canon Kabushiki Kaisha, Tokyo, Japan
Filed Sep. 28, 1979, Ser. No. 80,798
Claims priority, application Japan, Oct. 5, 1978, 53-122976
Int. Cl.³ G03B *15/05, 17/20*
U.S. Cl. 354—127 **9 Claims**

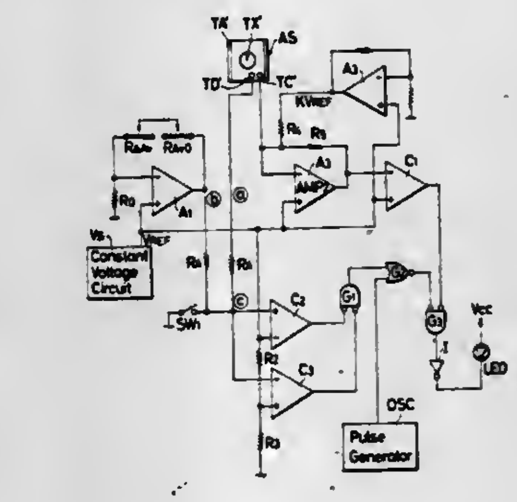

1. A camera system comprising:
(A) a flash device including:
flash photography aperture value signal forming means for producing a first aperture value signal; and
(B) a camera including:
(a) aperture presetting means for presetting an aperture value and for producing a second aperture value signal;
(b) a detection circuit for detecting the aperture value signal produced by said flash photography aperture value signal forming means and the second aperture value signal representative of an aperture value set by said aperture presetting means, said detection circuit being arranged to produce a coincidence signal when said two aperture value signals coincide with each other; and
(c) an indicating circuit for indicating an aperture presetting status in response to said coincidence signal produced by said detection circuit.

4,299,464
METHOD AND APPARATUS FOR REDUCING THE INCIDENCE OF EYE CLOSURES DURING PHOTOGRAPHING OF A HUMAN SUBJECT
William H. Cushman, Rochester, N.Y., assignor to Eastman Kodak Company, Rochester, N.Y.
Filed Aug. 4, 1980, Ser. No. 175,212
Int. Cl.³ G03B *15/03*
U.S. Cl. 354—137 **7 Claims**

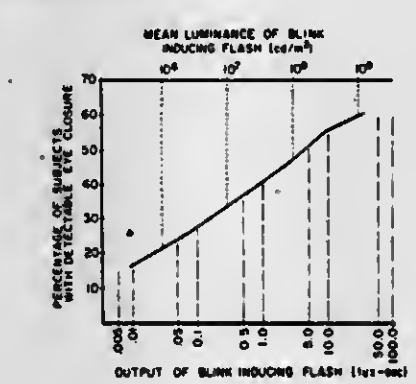

1. A method for reducing the incidence of eye closures of a human subject during a photographic exposure of the subject, comprising:
generating a flash of light prior to commencement of the exposure to induce the subject to blink; and
commencing the photographic exposure from between 240 msec. to 300 msec. following termination of the flash.

4,299,465
RETRACTABLE CAMERA
Kwok Y. Chan, Hong Kong, Hong Kong, assignor to W. Haking Enterprises, Ltd., Hong Kong, Hong Kong
Filed Nov. 2, 1978, Ser. No. 957,154
Int. Cl.³ G03B *15/05, 17/04*
U.S. Cl. 354—145 **7 Claims**

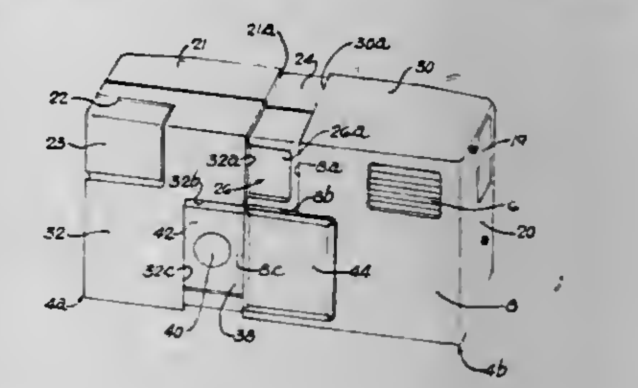

1. A still camera adapted to receive 110 film cartridges, said camera comprising: a housing which, when held in a normal picture-taking position, presents a relatively thin horizontal profile in a horizontal front to rear direction and has front and rear vertical profiles of much greater area than said horizontal profile, said housing comprising a pair of horizontally spaced housing sections to be grasped by opposite hands of the user during a picture-taking operation and mounted for horizontal reciprocating movement between relatively retracted and extended positions in a direction parallel to the front and rear vertical places of the camera housing, one of said housing sections including a horizontally elongated film cartridge-receiving compartment opening onto the rear thereof in alignment with the film cartridge-receiving compartment behind the same, the other housing section being a built-in flash lamp-carrying housing section forming what appears to be a horizontal extension of one end of said main housing section in the retracted position thereof, a viewfinder on said one housing section in vertical spaced relation to the film cartridge-receiving compartment and said flash lamp-carrying housing section including an electronic flash lamp with a front diffuser arranged to direct light forwardly of the camera housing when the camera is held in said normal picture-taking position, at least a part of said diffuser being within the vertical extension of the inner-end margins of said film cartridge-receiving compartment when said housing sections are in their relative retracted positions and being substantially spaced therefrom when said housing sections are in said relative extended positions.

4,299,466
APPARATUS FOR RESTORING LOST DATA TO A MEMORY DEVICE
Donald M. Harvey, Webster, N.Y., assignor to Eastman Kodak Company, Rochester, N.Y.
Filed May 5, 1980, Ser. No. 146,721
Int. Cl.³ G03B *1/60, 17/36*
U.S. Cl. 354—173 **11 Claims**

1. In a photographic camera of the type having (a) drive means for advancing and rewinding a filmstrip and (b) electrically powered memory means which stores data sensed during film advance, but loses stored data upon a power diminution below a minimum level for memory retention, the improvement comprising:

means, effective upon the resumption of electrical power above said minimum level to a predetermined level, for first operating said drive means to rewind the filmstrip at least to the location of the filmstrip at which lost data was first sensed before said power diminution and for then re-advancing the filmstrip a sufficient distance to restore lost data to said memory means.

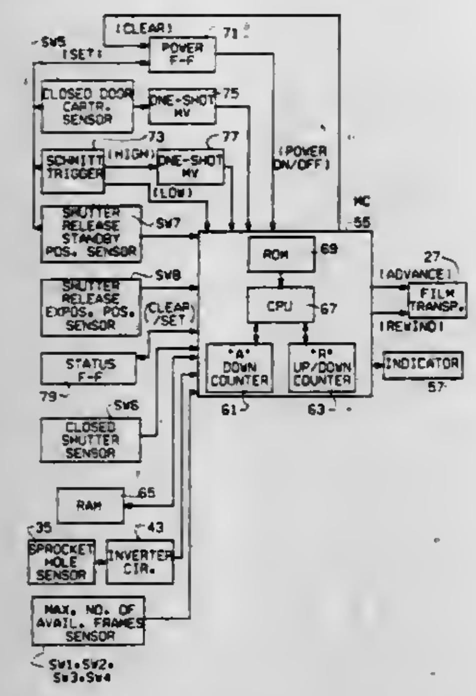

4,299,467
FOCUSSING SYSTEM FOR STILL AND MOTION-PICTURE CAMERAS
Karl Wagner, Munich, and Eduard Wagensonner, Aschheim, both of Fed. Rep. of Germany, assignors to Agfa-Gevaert Aktiengesellschaft, Leverkusen, Fed. Rep. of Germany
Filed Jan. 10, 1979, Ser. No. 2,389
Claims priority, application Fed. Rep. of Germany, Jan. 12, 1978, 2801251
Int. Cl.³ G03B *13/18*
U.S. Cl. 354—195 3 Claims

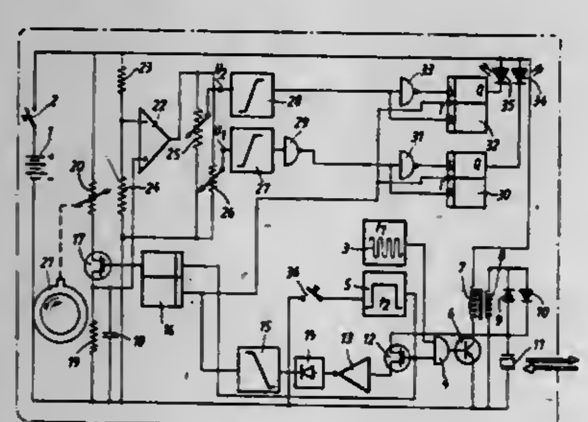

1. In the focussing system of a photographic camera having an adjustable objective, in combination, means emitting ultrasonic acoustic radiation from the camera towards a subject to be photographed and receiving the reflected-back radiation to produce a received-back signal; timing means connected to be controlled in dependence upon the received-back signal and operative for performing a timing operation whose duration depends upon the time of occurrence of the received-back signal to yield a measured-distance-dependent signal whose value is dependent upon the time required for the emitted acoustic radiation to travel from the camera to the subject and back to the camera; means operative for deriving from the measured-distance-dependent signal a quality-of-focus signal dependent upon the discrepancy between the present setting of the objective and the setting optically correct for the distance from the camera to the subject; signal-processing means receiving the quality-of-focus signal and deriving therefrom digital output signals indicating whether the present setting of the objective is shorter or longer than the objective setting optically correct for the distance from the camera to the subject; and clocked digital storage means receiving said digital output signals and when clocked registering said digital output signals, and including means for clocking the storage means each time acoustic radiation is emitted from and received back at the camera, the timing means comprising a timing capacitor, means for effecting a progressive change of the voltage across the timing capacitor by charging the capacitor, including a first resistor connected in parallel with the capacitor and a second resistor and an electronic switch connected in series with the parallel combination of the first resistor and the capacitor, the second resistor being a variable resistor mechanically coupled to the camera objective and assuming different resistance values in dependence upon the setting of the objective whereby the measured-distance-dependent signal is modified in dependence upon the present setting of the objective, and means for rendering the electronic switch conductive upon emission of acoustic radiation from the camera and for rendering the switch non-conductive in response to the received-back signal.

4,299,468
PHOTOELECTRIC RADIOMETER FOR PHOTOGRAPHIC APPARATUS
Monis J. Manning, Lexington, and William T. Plummer, Concord, both of Mass., assignors to Polaroid Corporation, Cambridge, Mass.
Filed Dec. 3, 1979, Ser. No. 99,523
Int. Cl.³ G01J *1/42*
U.S. Cl. 356—225 7 Claims

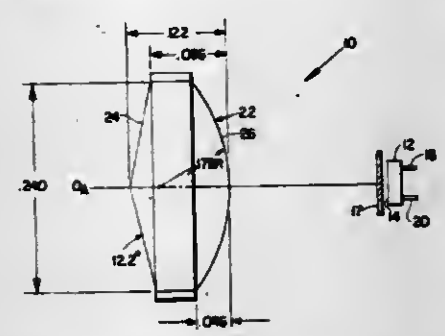

1. A photoelectric radiometer for providing an output signal to predict an exposure value for a photographic scene said radiometer comprising:

photodetector means, having a predetermined surface and given spectral sensitivity, for providing an output signal having an electrical characteristic that varies in accordance with the intensity of radiant power incident on said surface; and

optical means for collecting radiant energy from a predetermined part of a scene to be photographed and directing said collected radiation toward said photodetector means so that said photodetector means operates to provide said output signal such that said electrical characteristic thereof is proportional to the intensity of the radiant energy from said predetermined part of the scene whereby said output signal is utilized to predict an exposure value for the scene, said collecting and directing means being optically structured to selectively attenuate the relative spectral energy distribution of said collected radiation, at least over those wavelengths to which said photodetector is sensitive, to provide said radiometer with a preferred spectral sensitivity over the wavelength region from 350 to 1200 nanometers wherein said radiometer has substantially no sensitivity at wavelengths less than 350 nanometers and has an integrated spectral sensitivity beyond 850 nanometers which is no more than 10 percent of its total integrated value from 350 to 1200 nanometers, said preferred spectral sensitivity being further characterized in that the integral thereof from 350 to 700 nanometers is between 50 and 60 percent of said total integrated value from 350 to 1200 nanometers and wherein the integral thereof from 700 to 850 nanometers is between 30 and 40 percent of said total integrated value.

4,299,469
DRIVE CONTROLLING CIRCUIT FOR ELECTRIC SHUTTERS
Tomio Kurosu, Iwatsuki, and Kouichi Okajima, Ageo, both of Japan, assignors to Copal Company Limited, Tokyo, Japan
Filed Jun. 23, 1980, Ser. No. 162,243
Claims priority, application Japan, Jun. 25, 1979, 54-86933[U]; Dec. 28, 1979, 54-184744
Int. Cl.³ G03B *17/38*
U.S. Cl. 354—268 17 Claims

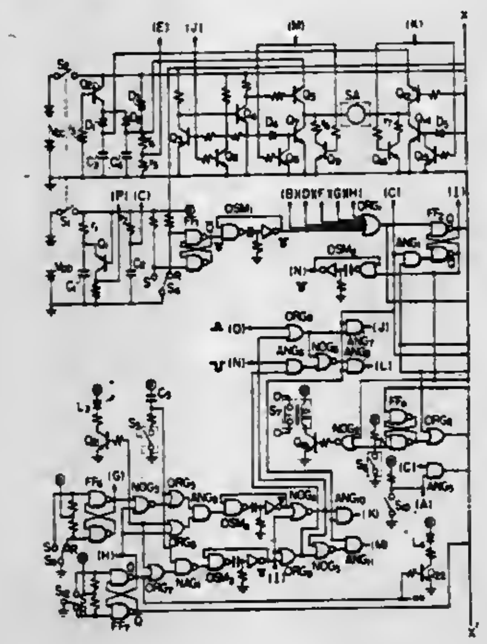

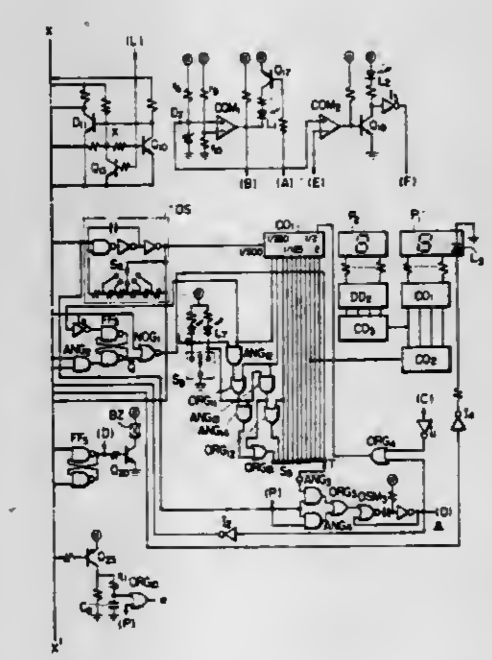

1. A drive controlling circuit for electric shutters comprising a release pulse generating circuit capable of being operated by a releasing operation, a shutter opening pulse generating circuit connected to said release pulse generating circuit and capable of being operated by an output signal from said release pulse generating circuit, an exposure time controlling circuit connected to said release pulse generating circuit and capable of being operated by an output signal from said release pulse generating circuit, a shutter closing pulse generating circuit connected to said exposure time controlling circuit and capable of being operated by an output signal from said exposure time controlling circuit, an actuator means connected to said shutter opening pulse generating circuit and shutter closing pulse generating circuit and capable of being operated to open a shutter by an output signal from said shutter opening pulse generating circuit and capable of being operated to close the shutter by an output signal from said shutter closing pulse generating circuit, a first switching means provided in association with said actuator means and capable of taking a first state and second state and capable of being switched over to the second state from the first state when the shutter is opened, a first discriminating circuit connected to the shutter closing pulse generating circuit and first switching means and capable of issuing an output signal when an output signal is issued from said shutter closing pulse generating circuit only in case said first switching means is in the first state, and a first warning means connected to said first discriminating circuit and capable of being operated by an output signal from said first discriminating circuit.

4,299,470
INTERCHANGEABLE CAMERA LENS ASSEMBLY
Seiichi Shimizu, Kawasaki, Japan, assignor to Canon Kabushiki Kaisha, Tokyo, Japan
Filed Feb. 19, 1980, Ser. No. 122,177
Claims priority, application Japan, Feb. 23, 1979, 54/20257; Jul. 2, 1979, 54/91829[U]; Jan. 18, 1980, 55/5102
Int. Cl.³ G03B *17/00*; G02B *7/02*
U.S. Cl. 354—286 12 Claims

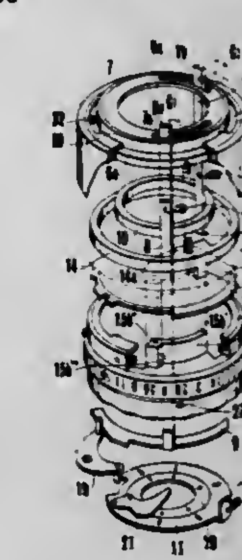

6. An interchangeable lens assembly for a single-lens reflex camera comprising:

a first lens assembly including

first component means including first lens barrel means and first coupling means adapted to engage complementary coupling means on said camera for mounting said first component means on said camera,

second component means mounted with said first component means and arranged to be rotatable relative thereto, said first and second component means being held in predetermined positions relative to each other when said first component means is detached from said camera,

retainer means adapted to cooperate with complementary retainer means on said camera to maintain said second component means rotatably fixed relative thereto during mounting of said first lens assembly on said camera,

second coupling means for releasably coupling a second lens assembly with said first lens assembly to form said interchangeable lens assembly;

means for controlling the quantity of light entering said camera through said interchangeable lens assembly;

signal transmission means including a signal transmission member for transmission of exposure control signals between said interchangeable lens assembly and said camera;

a second lens assembly including

third coupling means adapted to engage with said second coupling means for coupling said first and second lens assemblies, and

operation means for controlling operation of said light

quantity control means to determine the quantity of exposure light passing therethrough in accordance with predetermined conditions; and

connecting means for operably connecting said signal transmission means and said operation means when said interchangeable lens assembly is mounted on said camera, said signal transmission means thereby transmitting an exposure control signal between said interchangeable lens assembly and said camera.

4,299,471

SELF-DEVELOPING CAMERA BACK WITH REMOVABLE PROCESSING ASSEMBLY

James J. Alex, Haverhill, and June C. Fichter, Canton, both of Mass., assignors to Polaroid Corporation, Cambridge, Mass.

Filed Apr. 21, 1980, Ser. No. 142,478

Int. Cl.³ G03D *9/02*

U.S. Cl. 354—304 **16 Claims**

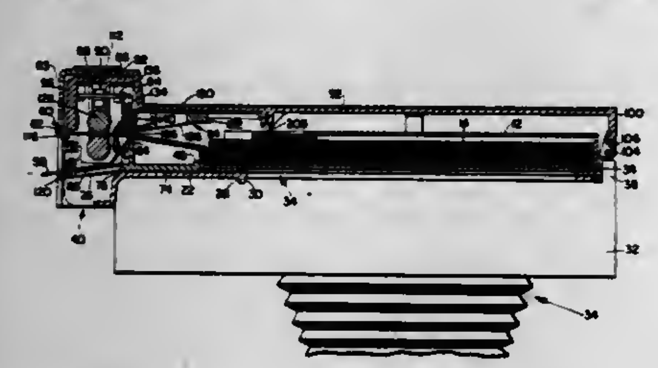

1. Photographic apparatus for effecting distribution of a fluid processing composition between superposed sheets of a self-developing film unit, said apparatus comprising:

an elongated housing including a forward wall having an exposure aperture therein and an end wall having a film withdrawal opening therein;

means for supporting such a film unit at an exposure position in registration with said exposure aperture and for movement, after exposure, along a longitudinally extending film advancement path through said film withdrawal opening;

means for processing the film unit including a support member having a base section and a pair of pressure applying members mounted on said support member and between which the film unit is moved as the film unit is advanced along said path for effecting fluid distribution;

means for defining a recess within said housing between said exposure aperture and said withdrawal opening and being transversely offset with respect to said path for releasably receiving and supporting at least a portion of said base section so that said pressure-applying means are operatively positioned in said path; and

means movable between a retaining position for releasably retaining said base section in said recess and a retracted position unblocking movement of said base section portion into and out of said recess thereby allowing said processing means to be removed from said housing, said movable retaining means also including means for guiding the film unit along said path towards said pressure applying means.

4,299,472

DEVELOPER APPARATUS

Terry G. Seelenbinder, Elk Grove Village, and Walter A. Hudson, Fox River Grove, both of Ill., assignors to AM International, Inc., Los Angeles, Calif.

Filed Jun. 13, 1980, Ser. No. 159,258

Int. Cl.³ G03D *5/06*

U.S. Cl. 354—318 **6 Claims**

1. Apparatus for developing copy material bearing a latent image comprising:

an applicator roll for applying liquid developer to copy material to be developed;

blade means for controlling the development action upon the copy material of liquid developer carried on the surface of said applicator roll;

means including a wick for supplying liquid developer to the surface of the applicator roll;

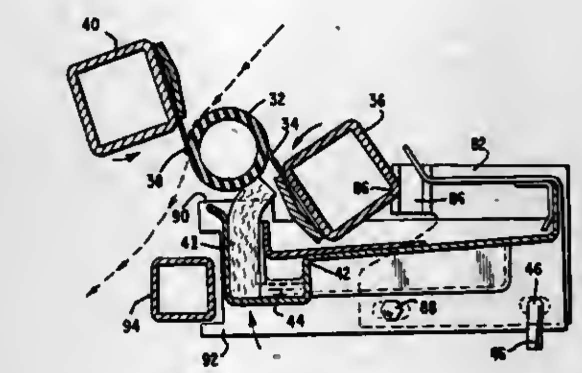

means for moving said wick into and out of contact with the surface of the applicator roll; and

means for automatically moving said blade means into or out of contact with the applicator roll in response to turning the apparatus on or off, the means for moving said wick being mechanically associated with said blade means so as to be driven directly by the movement thereof.

4,299,473

ELECTROPHOTOGRAPHIC COPYING MACHINE USING A THICK SHEET OF SMALL SIZE AS A TRANSFER SHEET

Koichi Endo, Hachioji, Japan, assignor to Konishiroku Photo Industry Co., Ltd., Tokyo, Japan

Filed Sep. 11, 1978, Ser. No. 941,410

Claims priority, application Japan, Sep. 14, 1977, 52-122815[U]; Feb. 18, 1978, 53-17913

Int. Cl.³ G03G *15/22*

U.S. Cl. 355—3 SH **7 Claims**

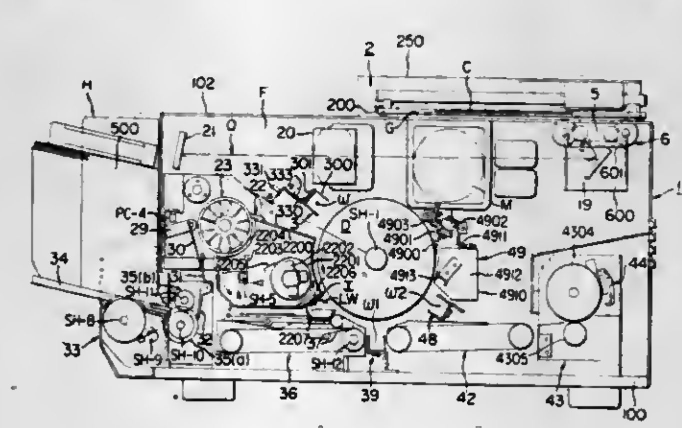

1. An electrophotographic copying machine of transfer type comprising, a reciprocating copy board on which an original to be copied is placed; sheet supply means energized to make intermittent contact with transfer sheet stored in a tray; carrying means for carrying the transfer sheet fed by said sheet supply means; a stopper provided in association with the carrying means for bringing the transfer sheet carried thereby into a temporary waiting condition on the carrying means; and two detection means for detecting the moving position of said copy board; said two detection means, the stopper, the copy board and sheet supply means being so related that, when the first detection means detects the position of the forwardly moving copy board to produce a first detection signal from its position where the stopper has been engaging with the front edge of the transfer sheet and afterwards when the second detection means detects the backwardly moving copy board to produce a second detection signal, the copy board is caused to move backwards in response to the second detection signal and in case of successive copying operation said second detection signal is used to reenergize said sheet supply means.

4,299,474

COMPONENT MOUNTING APPARATUS USEFUL FOR COMPACT COPIERS

Larry M. Ernst, William E. McColhim, both of Longmont; Carl A. Queener, Lyons; Bernard L. Wilzbach, Longmont, all of Colo., assignors to International Business Machines Corporation, Armonk, N.Y.

Filed Dec. 26, 1979, Ser. No. 107,216

Int. Cl.³ G03G *15/00*

U.S. Cl. 355—3 DR **13 Claims**

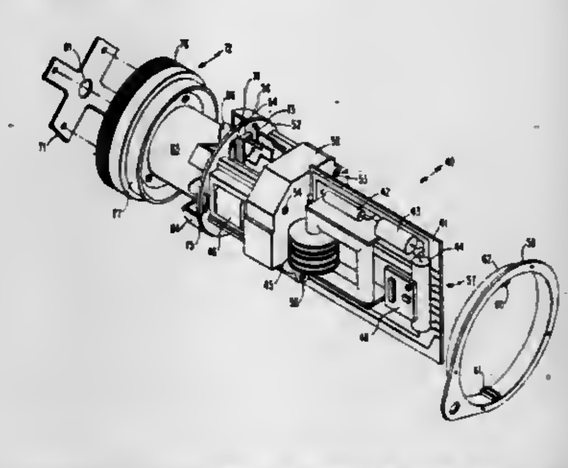

1. Electrical component mounting apparatus comprising a frame,

a closed loop sleeve mounted relative to said frame for movement in the direction of said closed loop,

an elongated assembly including a member having the electrical components attached thereto, said assembly having transverse dimensions for fitting within said sleeve so as to allow said sleeve to move around said member, and

means attached to said frame at least at one end of said sleeve for securably receiving said assembly in suspended relation within the interior of said sleeve.

4,299,475

SCANNING METHOD AND APPARATUS APPLICABLE TO VARIABLE MAGNIFICATION COPYING MACHINES

Yasumori Nagahara, Yokosuka, Japan, assignor to Ricoh Company, Ltd., Tokyo, Japan

Filed Mar. 12, 1980, Ser. No. 129,679

Claims priority, application Japan, Mar. 19, 1979, 54-32078

Int. Cl.³ G03G *15/28*

U.S. Cl. 355—8 **4 Claims**

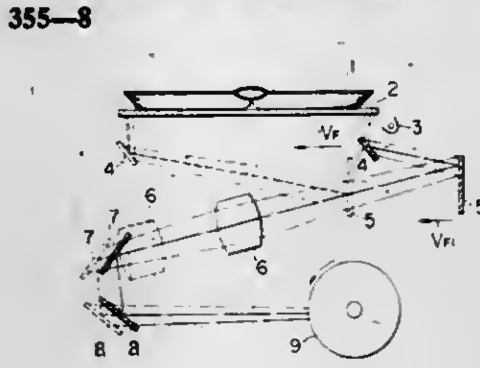

1. In a scanning method applicable to variable magnification copying machines capable of performing slit exposure of the image of original document to the surface of a photoconductor with a desired magnification by moving a contact glass on which said original document is placed or an optical system in synchronization with said photoconductor which is moved at a predetermined constant speed, the improvement in which the moving speed of said optical system or of said contact glass at the exposure step and the moving speed of the same at the returning step to the original position thereof are made variable depending upon a selected magnification of the copy of said original document and the moving speed of said optical system or of said contact glass is set in such a manner that the sum of the time required for said optical system or said contact glass to move for exposure scanning and the time required for said optical system or said contact glass to return to the home position thereof is constant regardless of said selected magnification of the copy of said original document.

4,299,476

IMAGE FORMING PROCESS AND APPARATUS THEREFOR

Yoshihiro Kawatsura, Kawasaki; Katsuichi Shimizu, Hoya, and Hisashi Sakamaki, Yokohama, all of Japan, assignors to Canon Kabushiki Kaisha, Tokyo, Japan

Continuation of Ser. No. 891,852, Mar. 30, 1978, Pat. No. 4,202,622. This application May 10, 1979, Ser. No. 37,843

Claims priority, application Japan, Apr. 6, 1977, 52/39857; Apr. 6, 1977, 52/39858

Int. Cl.³ G03G *15/00*

U.S. Cl. 355—14 C **16 Claims**

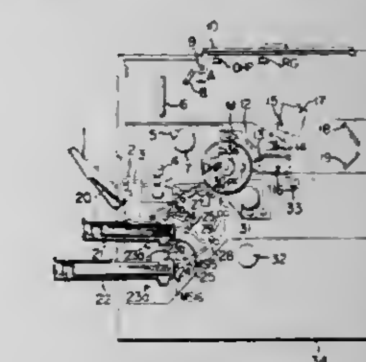

1. An image forming apparatus comprising a recording member, elements operable for forming an image on said recording member, at least one of said elements being movable, means for detecting a predetermined position of said at least one movable element, means for generating a signal for effecting timed functions of said elements, and digital control means provided with a stored main program for actuating said elements for image formation, said digital control means comprising a stored interrupt program to be executed upon interruption of the execution of said stored main program, an interrupt input port for causing execution of said interrupt program, and a normal input port for advancing the execution of said main program, said signal generating means and said detecting means being connected to said interrupt port and said normal port, respectively, to control said timed functions in response to the signal generating means and said detecting means.

4,299,477

JOB RECOVERY ENHANCEMENT IN COMPUTER FANFOLD REPRODUCTION

Joseph W. Ward, Pittsford, and Russell G. Schroeder, II, Rochester, both of N.Y., assignors to Xerox Corporation, Stamford, Conn.

Filed Sep. 17, 1979, Ser. No. 75,918

Int. Cl.³ G03G *15/00*

U.S. Cl. 355—14 R **4 Claims**

1. In a reproduction machine having a material handling apparatus adapted to handle document material in the form of a computer fanfold web consisting of a plurality of frame sections and being cooperable with a tractor drive for imparting movement of the web, the machine having a processor for reproducing copies of the frames positioned on an exposure platen, and a control system associated with the tractor drive for advancing the web to position the frames upon the platen manually or automatically, the combination of:

operator programming means for presetting a program for a reproduction run,

counting means adapted to maintain a running count of copies in process whereby in the event of premature stop-

ping of the machine, the number of copies then completed are known,
means for selecting the number of frame sections within the web to be reproduced,
means responsive to the difference between said counting means and said last named means being adapted to make

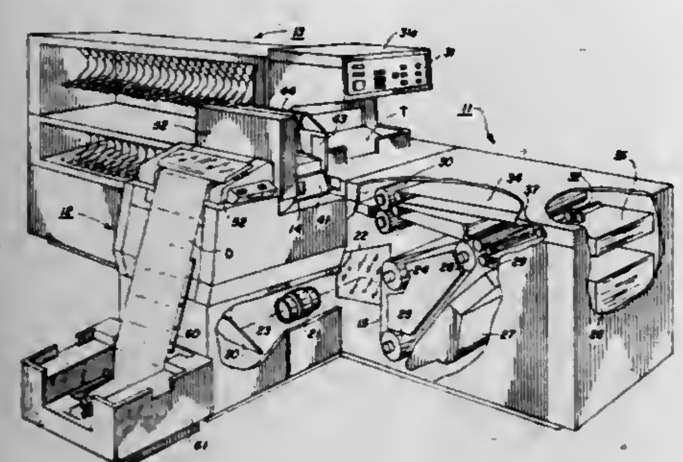

up lost copies as a result of the premature stopping while finishing any copies remaining from a presettable program, and
means for recycling the material handling apparatus to reposition the first frame of that portion of the web material associated with first of said lost copies.

4,299,478
BOUND DOCUMENT APPARATUS FOR A COPIER
Ruediger W. Knodt, Rochester; Terrence D. Charland, Pittsford; Charles J. Hull, Fairport; James E. Hutton, Webster; John L. Webb, Fairport, and John R. Yonovich, Shortsville, all of N.Y., assignors to Xerox Corporation, Stamford, Conn.
Filed Oct. 30, 1979, Ser. No. 89,339
Int. Cl.³ G03G *15/00*
U.S. Cl. 355—3 R **6 Claims**

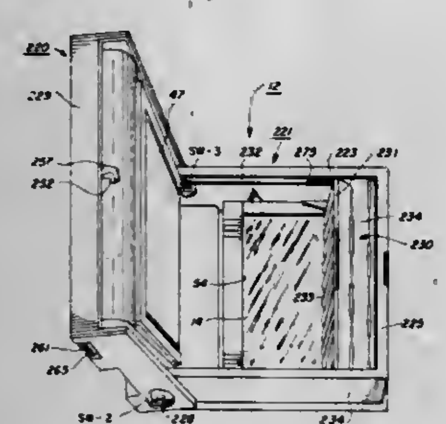

1. In an electrostatographic reproduction machine having a support frame, document handling apparatus for advancing document sheets from a stack to an exposure platen, and an electrostatographic processor for processing copy sheets of the document sheets when exposed, the improvement comprising:
a housing for containing the document handling apparatus,
pivotal support means on the machine frame and connected to said housing for permitting the pivotal movement of the document handling apparatus toward and away from the exposure platen, and
a bound document cover assembly detachably retained by said housing, said cover assembly being connected to said pivotal support means and movable as a unit with said housing to expose the exposure platen for manual use, said housing being pivotally related to said cover assembly whereby the latter may be maintained on said platen while said housing is in a pivoted raised position, so as to permit bound document copying.

4,299,479
PHOTOGRAPHIC PRINTER WITH SENSITIVITY CONTROL FOR CLASSIFICATION OF NEGATIVES
Ronald B. Harvey, and Jan T. Freier, both of Minneapolis, Minn., assignors to Pako Corporation, Minneapolis, Minn.
Filed Sep. 11, 1980, Ser. No. 186,188
Int. Cl.³ G03B *27/73, 27/80*
U.S. Cl. 355—38 **19 Claims**

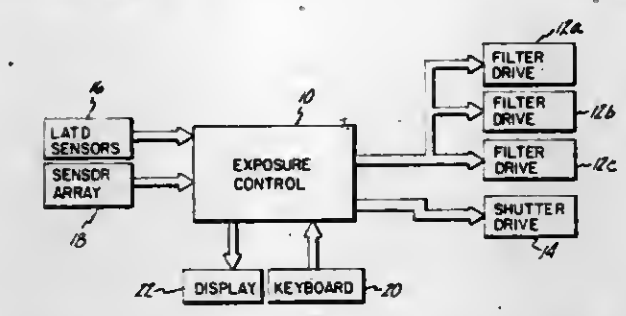

1. Apparatus for identifying and classifying photographic film originals into various types of scenes, the apparatus comprising:
means for measuring optical characteristics of film originals;
means for classifying film originals based upon the measured optical characteristics; and
user-selectable sensitivity control means for adjusting the sensitivity of the means for classifying to a particular type of scene in an essentially linear fashion.

4,299,480
MIRROR SCANNER SYNCHRONIZED WITH MOVING FOLDED DOCUMENT PLANE
David C. Gilkeson, North Oaks, and Robert A. Muehlhausen, Maplewood, both of Minn., assignors to Minnesota Mining & Manufacturing Company, St. Paul, Minn.
Filed Sep. 2, 1980, Ser. No. 183,145
Int. Cl.³ G03B *27/70*
U.S. Cl. 355—66 **5 Claims**

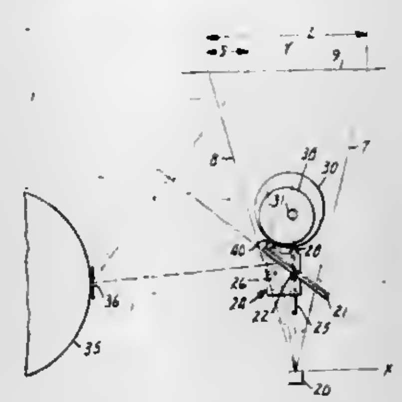

1. An image scanning apparatus for use in an image projecting device for receiving and reflecting continuous scanned image points, said apparatus comprising:
lens means for projecting an image and having a normal object and a normal image plane,
a flat mirror,
means supporting said mirror in the optical path of said lens means for reflecting said image points between a normal image plane and a folded image plane, said means supporting said mirror including means for moving said mirror relative to said object and said image planes, and relative to said lens means for maintaining the plane of the mirror on the perpendicular bisector of an imaginary line connecting the image points on the normal image plane with the corresponding points on the folded image plane and for supporting said mirror reflecting surface at a distance such that the sum of the incident ray and reflected ray of an image point will equal the length of the ray for the image point from the lens means to the position of the corresponding image point on said normal image plane; and

means for synchronizing the movement of said mirror and the movement of the folded image plane to maintain said mirror in the proper plane for each image point on the folded image plane.

4,299,481
ADJUSTABLE CURRENT LAMPHOUSE
Darwin E. Chapman, Mountain View, Calif., assignor to Ciba-Geigy AG, Basel, Switzerland
Filed Apr. 2, 1979, Ser. No. 26,121
Claims priority, application United Kingdom, Mar. 31, 1978, 12629/78
Int. Cl.³ G03B *27/72*
U.S. Cl. 355—69 **2 Claims**

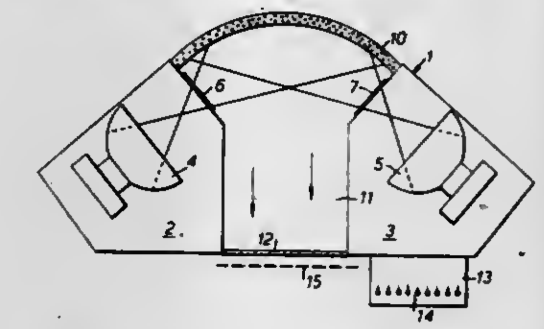

1. A lamphouse for use in the production of prints on variable contrast material the lamphouse comprising at least a first tungsten filament lamp from which light passes through a first colour-selective filter passing light in one of two mutually exclusive wavebands and at least a second tungsten filament lamp from which light passes through a second colour-selective filter passing light in the other of the two mutually exclusive wavebands, a diffusing screen placed to pass the filtered light out of the lamphouse and through a transparency which is to be printed there being connected between each said lamp and an alternating voltage source a bidirectional thyristor (triac), the phase angle of conduction of which is determined by a microprocessor according to data stored in a read-only memory, and single manual control means for selecting alternative addresses in the memory according to the contrast of print to be made, the data stored being chosen to cause the bidirectional thyristors to adjust the currents through said first and second lamps so that the energies of light in the two mutually exclusive wavebands vary substantially in inverse proportion as the chosen contrast of the print is varied and the total light intensity is controlled to suit the sensitivity of the material at different contrast grades to ensure equal exposure for each contrast grade.

4,299,482
MEASUREMENT OF WINDSCREEN DISTORTION USING OPTICAL DIFFRACTION
Harry L. Task, Montgomery County, Ohio, assignor to The United States of America as represented by the Secretary of the Air Force, Washington, D.C.
Filed Nov. 1, 1979, Ser. No. 90,383
Int. Cl.³ G01B *9/00*
U.S. Cl. 356—124 **4 Claims**

1. A method for measurement of distortion in a large area of an optically transparent medium, such as an aircraft windscreen, comprising the steps of:
a. placing a large, high contrast, proportionately distributed bar pattern of alternate dark and light bars on one side of said transparent medium;
b. making a small, transparency recording of an image of said large bar pattern through said transparent medium;
c. projecting a beam of coherent luminous energy through said image of the pattern in said transparency recording and focusing the energy passing therethrough so as to produce a Fraunhofer diffraction plane pattern composed of a row of points of light; and
d. quantitatively evaluating the distortion characteristics of the transparent medium appearing in said Fraunhofer

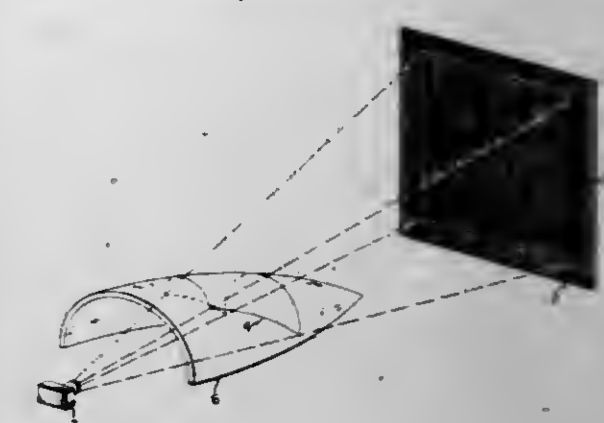

diffraction plane pattern on the basis of location, shape and intensity distribution of said points of light.

4,299,483
PATH ALIGNMENT APPARATUS
Thomas C. Grove, 1104 Elm, Ft. Collins, Colo. 80521, and William S. Bennet, II, 8236 Cedar Crest Way, Sacramento, Calif. 95826
Filed Nov. 13, 1979, Ser. No. 93,691
Int. Cl.³ G01B *11/26;* **G05B** *1/00*
U.S. Cl. 356—152 **20 Claims**

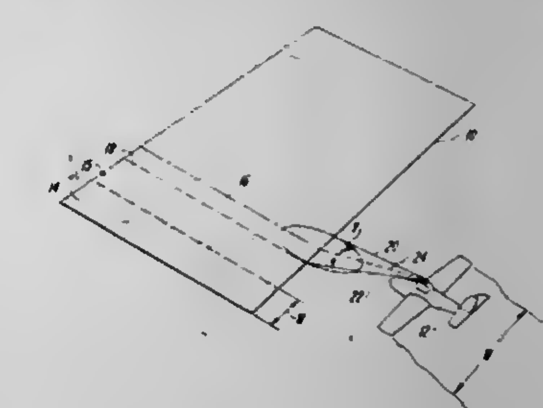

1. For use in a vehicle capable of repeated traverses over an assigned area successively in respective different ones of a plurality of parallel paths displaced laterally one from another and including delivery means carried by said vehicle for dispensing a material along each of said paths in a swath of predetermined width, path alignment apparatus comprising:
sensing means carried by said vehicle and oriented to view the path of approach of said vehicle for detecting characteristic radiation at a predetermined frequency, presented by said material deposited in a previous swath, and developing a discriminated signal which distinguishes between presence and absence of said radiation over the fixed horizontal angular extent of the field of view from said vehicle;
range-finding means carried by said vehicle for developing a distance signal, representative of slant range from said vehicle, that represents location of said vehicle relative to the location of said path being approached and viewed along said horizontal angular extent;
and indication means carried by said vehicle and responsive to and correlating, by comparison thereof, said discriminated signal and said distance signal for developing an information signal that represents the degree of departure as between longitudinal edge margins of a previously dispensed swath and a new swath being approached by said vehicle, thereby permitting said degree of departure in response to said information signal to be indicated for changing the path of said vehicle relative to a previous one of said swaths.

4,299,484

RANGE AND SPEED MEASURING EQUIPMENT WITH NOISE FREQUENCY MODULATED TRANSMITTER

Wolfgang Holzapfel, Bruchkoebel, Fed. Rep. of Germany, assignor to Honeywell GmbH, Offenbach, Fed. Rep. of Germany

Filed Aug. 1, 1979, Ser. No. 62,847

Claims priority, application Fed. Rep. of Germany, Aug. 10, 1978, 2834954

Int. Cl.^{3} G01C *3/08, 3/36*

U.S. Cl. 356—28.5 **14 Claims**

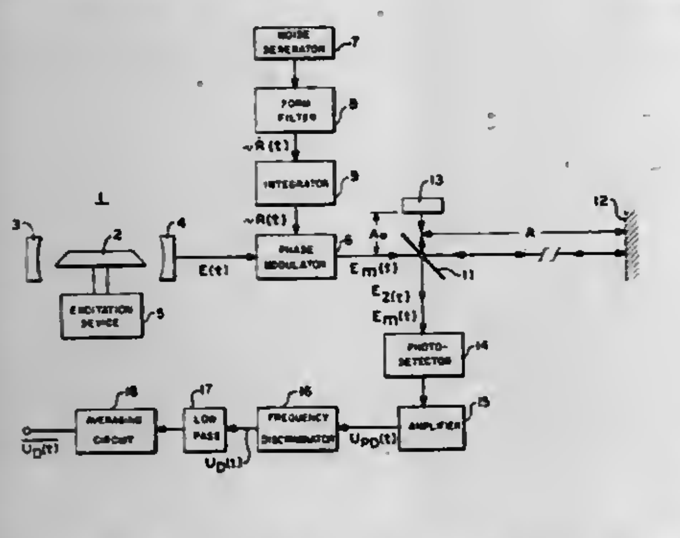

1. A laser range meter of the type including a laser transmitter for transmitting modulated radiation toward a target, reference signal generation means for producing reference radiation, and a receiver for receiving radiation reflected by the target, said receiver including a mixing unit for mixing the received radiation with the reference radiation, said receiver being operable to produce an electrical signal indicative of the frequency difference between the received radiation and the reference radiation, wherein the improvement comprises:

modulator means for noise modulating the frequency of the transmitted radiation;

a photodetector connected to receive the reference radiation and at least a portion of the received radiation, said photodetector serving as the mixing unit; and

averaging means connected to said photodetector for receiving the electrical signal and providing an output signal indicative of target range.

4,299,485

SPECTROPHOTOMETER

Derek Barlow, and Charles V. Perkins, both of Cambridge, England, assignors to Pye Electronic Products Limited, Cambridge, England

Filed Feb. 27, 1980, Ser. No. 125,013

Claims priority, application United Kingdom, Mar. 5, 1979, 07616/79; Mar. 5, 1979, 07618/79

Int. Cl.^{3} G01J *3/42*

U.S. Cl. 356—307 **4 Claims**

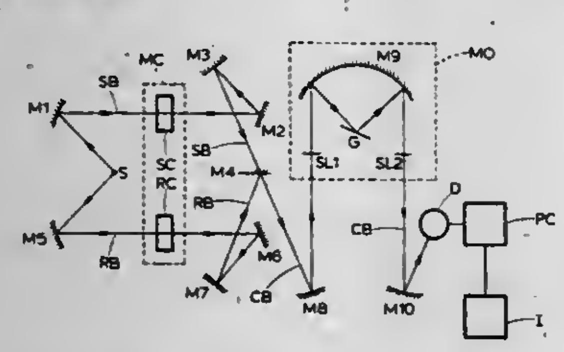

1. A dual beam spectrophotometer comprising

a radiation source providing two separate radiation paths with a first radiation path passing through a sample cell and a second radiation path passing through a reference cell,

means receiving radiation from said two radiation paths for forming alternative radiation pulses and dark periods,

detector means receiving interlaced radiation pulses separated by said dark periods, wherein radiation following said first and second paths is prevented from falling on said detector means, for forming signals representative of the magnitude of radiation received by said detector means, and

signal processing circuitry means receiving said signals from said detector means for generating a first signal representative of radiation in said first path minus background radiation and a second representative of radiation in said second path minus background radiation,

wherein a signal provided by said detector means during successive dark periods is averaged, and wherein the average value is substracted from signals produced by said detector means when radiation is passed through said first and second paths so as to produce said first and second signals respectively.

4,299,486

SPECTROFLUOROMETER

Taro Nogami, and Hiroshi Hirose, both of Ibaraki, Japan, assignors to Hitachi, Ltd., Tokyo, Japan

Filed Feb. 5, 1980, Ser. No. 118,725

Claims priority, application Japan, Feb. 16, 1979, 54/16793

Int. Cl.^{3} G01N *21/64*

U.S. Cl. 356—318 **7 Claims**

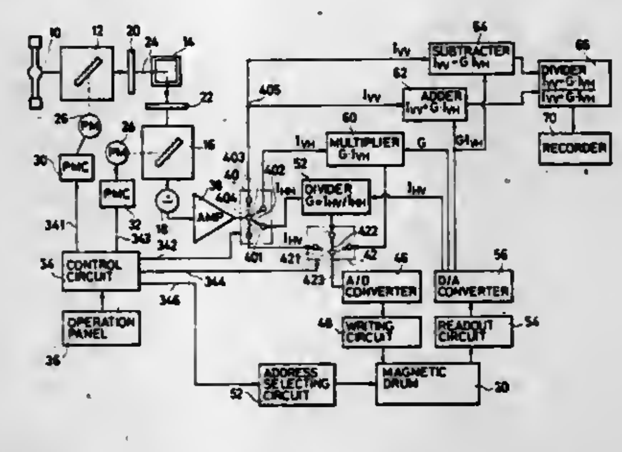

1. A spectrofluorometer comprising first spectroscopic means to separate light from a light source into its spectral components; second spectroscopic means to separate fluorescence into its spectral components, the fluorescence being emitted from a measurement sample by irradiating it with monochromatic light from said first spectroscopic means; wavelength drive means to perform wavelength scannings of said first and second spectroscopic means; control means to control said wavelength drive means; first and second polarization means to polarize lights, said means being respectively arranged between said first spectroscopic means and said measurement sample and between said measurement sample and said second spectroscopic means, said first and second polarization means have their polarization direction controlled by said control means; sensing means to sense light emergent from said second spectroscopic means; first signal processing means to form a signal representative of a ratio between a first spectrum signal and a second spectrum signal, the first spectrum signal being obtained by a wavelength scanning of said second spectroscopic means when said first and second polarization means are arranged so that polarization directions of lights emergent from said first and second polarization means are identical, the second spectrum signal being obtained by a wavelength scanning of said second spectroscopic means when said first and second polarization means are arranged so that the polarization directions of the lights emergent from said first and second polarization means intersect orthogonally to each other; second signal processing means to correct a third spectrum signal in response to the output signal from said first signal processing means, the third spectrum signal being obtained by a wavelength scanning of said second spectroscopic means when said first and second polarization means are arranged so that the polarization direction of the light emergent from said first polarization means is a direction different from those in which said first and second spectrum signals have been obtained and that the polarization directions of the lights emergent from said first and second polarization means intersect orthogonally to each other; and third signal processing means to form a signal representative of an emission polarization spectrum of said measurement sample from a fourth spectrum signal and an output signal from said second signal processing means, the fourth spectrum signal being obtained by a wavelength scanning of said second spectroscopic means when said first and second polarization means are arranged so that the polarization direction of the light emergent from said first polarization means is a direction different from those in which said first and second spectrum signals have been obtained and that the polarization directions of the lights emergent from said first and second polarization means are identical.

4,299,487

METHOD OF AND DEVICE FOR ANALYZING ONE INGREDIENT IN A MIXED SOLUTION WITH TWO LIGHT BEAMS OF DIFFERENT WAVELENGTHS

Masayuki Sengoku; Tadasbi Honkawa; Tadafumi Kuroishi, and Ritsuo Komori, all of Katsuta, Japan, assignors to Hitachl, Ltd., Tokyo, Japan

Filed Apr. 4, 1979, Ser. No. 27,099

Claims priority, application Japan, Apr. 5, 1978, 53-39194

Int. Cl.^{3} G01J *3/42*

U.S. Cl. 356—320 **12 Claims**

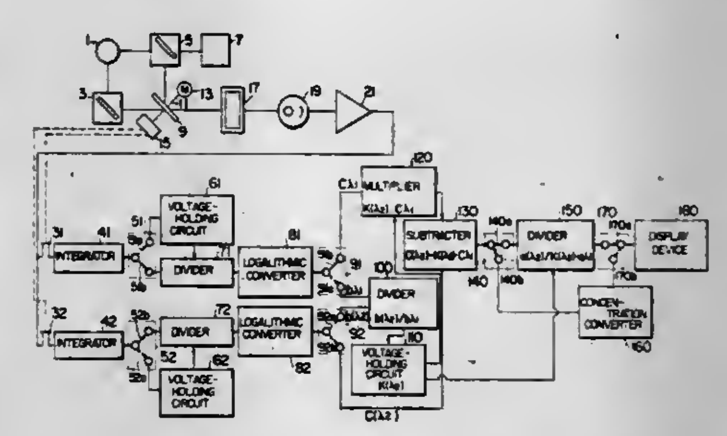

1. A method of analyzing one ingredient in a mixed solution with two light beams of different wavelengths comprising:

a first step of passing a first light beam having a wavelength fixed at a predetermined value and a second light beam which is scanned over a range of wavelengths, selectively through a solvent to obtain first and second photometric signals corresponding to said first and second light beams passed through said solvent, respectively;

a second step of producing first and second reference signals from said first and second photometric signals, respectively;

a third step of passing said first and second light beams through a first solution containing only a first ingredient in said solvent to obtain third and fourth photometric signals corresponding to said first and second light beams passed through said first solution respectively, said first ingredient being one of the ingredients contained in said mixed solution;

a fourth step of obtaining a first normalized signal by normalizing said third photometric signal by said first reference signal and a second normalized signal by normalizing said fourth photometric signal by said second reference signal;

a fifth step of producing a signal indicating a ratio of said second normalized signal to said first normalized signal;

a sixth step of passing said first and second light beams through said mixed solution to obtain fifth and sixth photometric signals corresponding to said first and second light beams passed through said mixed solution, respectively;

a seventh step of obtaining a third normalized signal by normalizing said fifth photometric signal by said first reference signal and a fourth normalized signal by normalizing said sixth photometric signal by said second reference signal;

an eighth step of producing a signal indicating a product of said third normalized signal and the ratio indicating signal produced in the fifth step; and

a ninth step of producing a signal indicating a difference between said signal produced in the eighth step and said fourth normalized signal.

4,299,488

TIME-DIVISION MULTIPLEXED SPECTROMETER

Walter J. Tomlinson, III, Holmdel, N.J., assignor to Bell Telephone Laboratories, Incorporated, Murray Hill, N.J.

Filed Nov. 23, 1979, Ser. No. 96,686

Int. Cl.^{3} G01J *3/12, 3/18, 3/28;* **H04B** *9/00*

U.S. Cl. 356—328 **8 Claims**

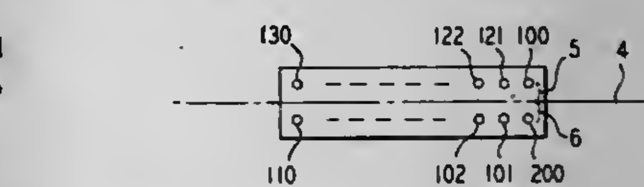

1. A time-division multiplexed spectrometer which comprises:

a spectrometer (1,2) having an image plane and a symmetry plane;

characterized in that

said spectrometer further includes:

an optical source (100) disposed at a first position on said image plane and displaced a first distance from the intersection of said symmetry plane and said image plane;

a plurality of optical fibers (101–110), each having a first end disposed in a first straight line and a second end disposed in a second straight line, said first straight line being disposed in said image plane, parallel to and displaced from said intersection at said first distance on the opposite side of said symmetry plane from said input source, whereby narrowband portions of the spectrum of radiation coupled into the spectrometer by said input source are coupled into said fibers, said second straight line being disposed in said image plane, parallel to and displaced from said intersection at a second distance on the same side of said symmetry plane as said input source; and

an optical receptor (200) disposed at a second position on said image plane, at said second distance on the opposite side of said symmetry plane from said input source.

4,299,489

DEVICE FOR DETERMINING THE HISTOGRAM OF SIZES OF PARTICLES

Jean-Francois Thery, 30, rue Barque, Paris, France 75015; Henri Maitre, 27, rue Stephen Pichon, Paris, France 75013, and Jacques P. Fleuret, 61, av. Casanova, Ivry, France 94200

Filed Jan. 24, 1980, Ser. No. 162,667

Claims priority, application France, Jun. 22, 1979, 79 16168

Int. Cl.^{3} G01N *15/02*

U.S. Cl. 356—336 **18 Claims**

1. A particle size analyzer device for granular and cellular substances composed of particles having sizes lying in a given range, said device comprising:

a coherent light source;

a sample of said substance;

means for forming the Fourier transform of said sample and thereby obtaining the bidimensional diffraction spectrum of the sample;
means for isolating that part of said bidimensional diffraction spectrum lying along a radius of the same and thereby forming a radially directed monodimensional spectrum;
means for sensing a first signal equal to the amplitude of said monodimensional spectrum versus the distance ω from an origin point thereof;
means for forming the Hankel transform of said first signal and thereby obtaining a second signal;

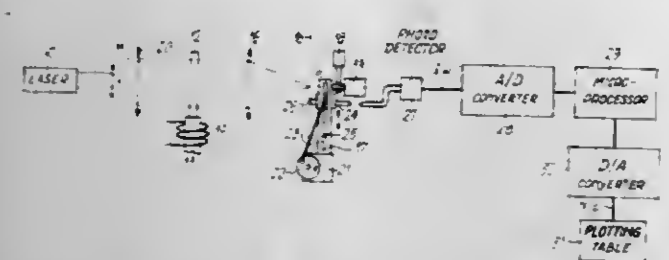

means for taking the second derivative with respect to "t", where "t" is the space variable conjugate of "ω", thereby obtaining a third signal equal to the convolution product of the distribution function of the particle sizes by another function of said particle size;
means for extracting from said convolution product said distribution function; and
means for displaying said distribution function versus the size of the particles of the substance.

4,299,490
PHASE NULLING OPTICAL GYRO
Richard F. Cahill, El Toro, and Eric Udd, Huntington Beach, both of Calif., assignors to McDonnell Douglas Corporation, Long Beach, Calif.
Filed Dec. 7, 1978, Ser. No. 967,267
Int. Cl.³ G01C *19/64*
U.S. Cl. 356—350 74 Claims

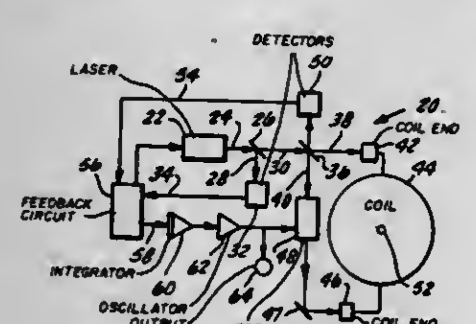

1. An optical device for determining rotation including:
a light source which produces a first beam of light;
means for splitting said first beam of light into at least second and third beams of light and recombining said second and third beams into a fourth beam of light;
means for directing said second and third beams of light in opposite directions along a path about a predetermined axis about which the rotation is to be measured to establish a counterpropagating light path for said second and third beams;
means capable of varying nonreciprocal phase shift between said second and third beams of light positioned in said second and third beams of light;
means for detecting said fourth beam of light and producing therefrom an output indicative of phase shift induced by the rotation about said predetermined axis; and
means for compensating said output of said means for detecting to restore said output of said means for detecting to the phase relationship without rotation by producing an output indicative of the degree of phase compensation and applying said output indicative of the degree of phase compensation to said means capable of varying nonreciprocal phase shift, said output indicative of the degree of phase compensation also indicating rotation.

4,299,491
NONCONTACT OPTICAL GAUGING SYSTEM
James P. Waters, Ellington, and Robert K. Thornton, Coventry, both of Conn., assignors to United Technologies Corporation, Hartford, Conn.
Filed Dec. 11, 1979, Ser. No. 102,310
Int. Cl.³ G01B *11/24*
U.S. Cl. 356—376 6 Claims

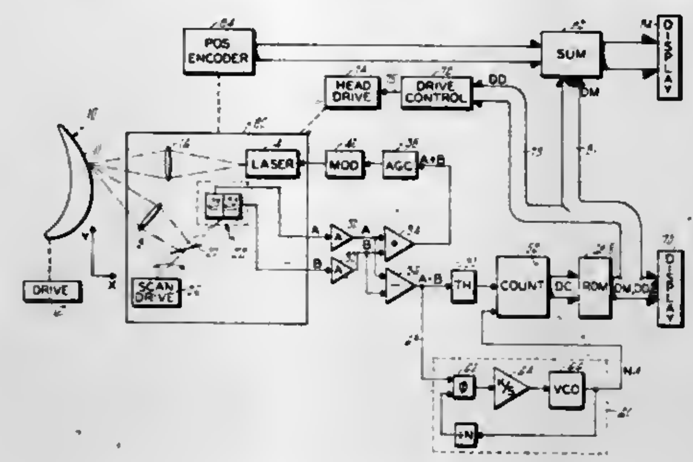

1. A gauging system for measuring the contour dimension of objects, comprising:
means for focusing the radiation output from a radiation source onto the surface of the object,
a detector for generating at least two signals whose relationship manifests the scan distance on each side of a detector centerline which corresponds to a base contour dimension,
imaging means located between the surface and the detector for imaging the radiation scattering from the surface onto said detector and for repetitively scanning it along said detector,
means for displacing the surface being measured relative to the source and the detector, and
means responsive to the time relationship of said signals for generating a contour signal reflecting the change in contour dimension from said base contour dimension.

4,299,492
LASER MEASURING SYSTEM FOR INCREMENTAL ASSEMBLIES
John G. Etzel, Rockville, Md., and James A. Munford, Fulton, Md., assignors to The United States of America as represented by the Administrator of the National Aeronautics and Space Administration, Washington, D.C.
Filed Dec. 7, 1979, Ser. No. 102,001
Int. Cl.³ G01B *11/10, 9/02*
U.S. Cl. 356—386 10 Claims

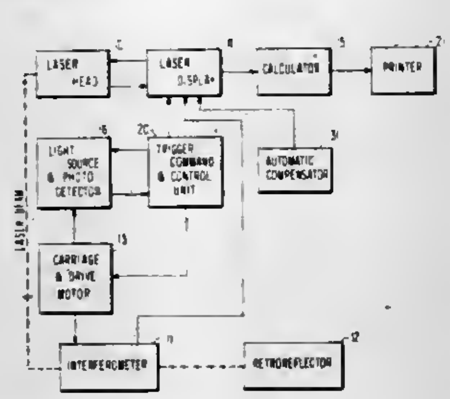

1. A laser measuring system for measuring an incremental assembly, said laser measuring system comprising:
a laser and a retroreflector for positioning adjacent opposite edges of said incremental assembly,
an interferometer movable along a line between said retroreflector and said laser,
laser display means connected to said interferometer for converting an output from said interferometer into a distance indicating signal in response to a control signal,
detecting means movable with said interferometer for detecting incremental positions of said incremental assembly along said line, and
control means responsive to said detecting means for producing said control signal to said laser display means.

4,299,493
AUTO-OPTICAL CENTERING DEVICE FOR PHOTOMETERS
Venton R. Harrison, 9407 Singleton Dr., Bethesda, Md. 20034
Filed Dec. 10, 1979, Ser. No. 101,667
Int. Cl.³ G01N *21/01*
U.S. Cl. 356—414 3 Claims

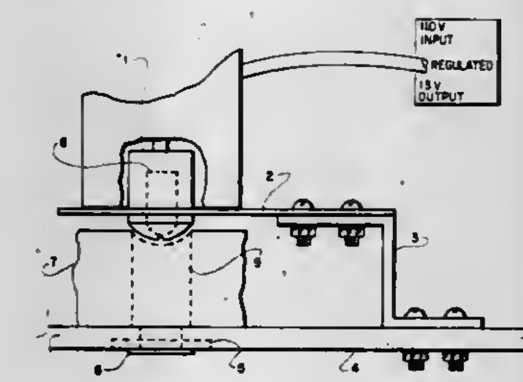

1. An instrument for the analysis of a plurality of components of a single specimen equipped with an auto-optical centering device which comprises in combination:
a. a flexible arm means for supporting the incandescent lamp at one end and mounted on an aluminum support bracket at the other end;
b. an incandescent lamp enclosed in a plastic lamp housing which is mounted on the flexible arm;
c. a stainless steel tip affixed in the lamp housing which contains an opening at its center to permit the emission of light therethrough;
d. an optical filter and silicon photodetector located directly beneath the stainless steel tip; and
e. a microtiter plate support tray to which is attached the aluminum support bracket which supports the flexible arm means.

4,299,494
MEASUREMENT OF HEAT TRANSFER BETWEEN A SPECIMEN AND AN AMBIENT MEDIUM
Jacques Badoz; Albert Boccara, and Daniele Fournier born Juillard, all of Paris, France, assignors to Agence Nationale de Valorisation de la Recherche (ANVAR), Neuilly sur Seine, France
Filed May 21, 1980, Ser. No. 151,761
Claims priority, application France, May 22, 1979, 79 12985
Int. Cl.³ G01N *21/00*
U.S. Cl. 356—432 15 Claims

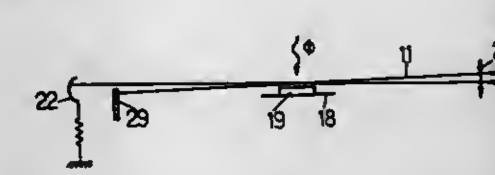

1. Method for measuring heat transfer between a specimen of condensed matter and an ambient gas, comprising directing a pencil of light substantially parallel and close to a surface of the specimen in contact with gas while said specimen is subjected to energisation variable in time at a predetermined frequency; and measuring the magnitude of the angular alternating deflection movement of said light pencil.

4,299,495
DENSITY METER
Akira Sawakata, Fussashi; Hiroshi Yamamuro, Yokohamashi, and Syouzou Kobayashi, Hachiojishi, all of Japan, assignors to Tokyo Shibaura Denki Kabushiki Kaisha, Kawasaki, Japan
Filed May 16, 1980, Ser. No. 150,583
Claims priority, application Japan, May 17, 1979, 54-60665
Int. Cl.³ G01N *21/01*
U.S. Cl. 356—442 5 Claims

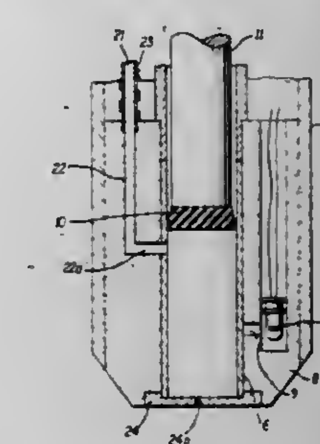

1. A density meter adapted to be immersed in a liquid whose degree of opacity is to be optically measured, comprising:
a density measurement system including a hollow inner cylinder having an inlet, a piston movable in said cylinder and an optical system externally associated with said cylinder at a first distance from said inlet; and
a calibration system comprising a calibration liquid flow path having an outlet communicating with said cylinder at a point on said cylinder having a second distance from said inlet greater than said first distance,
whereby said calibration system is activated by raising said piston to a position further from said inlet than said second distance.

4,299,496
LOAD PROXIMITY DETECTION TECHNIQUES
John J. Lord, Pontiac, Ill., assignor to Interlake, Inc., Oak Brook, Ill.
Filed Nov. 6, 1978, Ser. No. 958,042
Int. Cl.³ B65G *43/00;* G01S *17/08*
U.S. Cl. 356—446 7 Claims

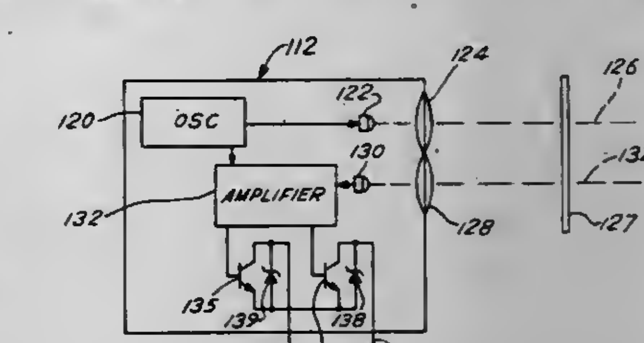

1. In a vehicle for transporting loads among the racks of a warehousing system, improved apparatus for detecting the proximity of objects comprising:
source means for transmitting at least a first transmitted beam of optical radiation along a first axis;
detector means for detecting at least a first transmitted beam

of optical radiation having a second axis substantially parallel to the first axis;

adjustment means for adjusting the maximum range at which optical radiation reflected from an object can be detected by the detector means; and

mounting means for mounting the source means and detector means to the vehicle, whereby optical radiation scattered by an object is received by the detector means to detect the proximity of the object to the vehicle.

4,299,497

INSTRUMENT FOR DETERMINING THE DISTINCTNESS OF IMAGE OF A PAINT FILM

Nicos M. Komodromos, Flint, Mich., assignor to E. I. Du Pont de Nemours and Company, Wilmington, Del.

Continuation of Ser. No. 836,841, Sep. 26, 1977, abandoned. This application Feb. 19, 1980, Ser. No. 122,503

Int. Cl.³ G01N ***21/57***

U.S. Cl. 356—448 **5 Claims**

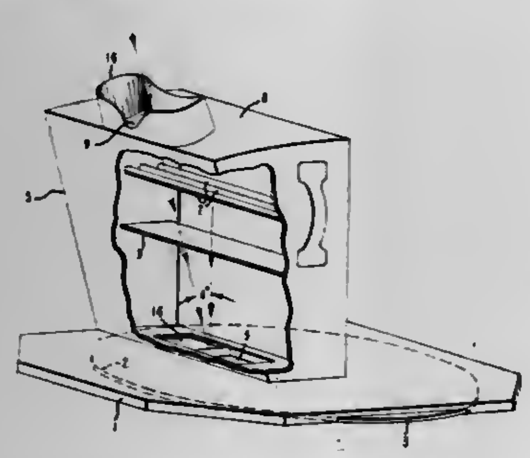

1. An instrument for determining the distinctness of image of a sample paint film by providing comparison with a plurality of standard paint films comprising:

a base which is at least partially hollow having a first opening, for displaying the sample, which extends vertically through both the top and bottom surfaces of said base and having a second opening in the top surface, adjacent to the first opening;

a casing, having a viewing aperture therein, mounted on said base and covering at least the portion thereof containing the two openings, said aperture being positioned such that it affords a line of sight to said openings at an angle of 15–30 degrees with the normal to said base;

a light source fixed within said casing above the openings in said base;

display means movably mounted within the hollow portion of said base for displaying a plurality of standard paint films through the second opening of said base; and

image means, located within said casing between said light source and the openings in said base, for providing an image forming pattern capable of being projected by said light source onto the sample and standard through the openings in said base.

4,299,498

FLASHING REACTOR

Robert D. Sauerbrunn, Seaford, Del., assignor to E. I. Du Pont de Nemours and Company, Wilmington, Del.

Filed Dec. 3, 1979, Ser. No. 99,621

Int. Cl.³ B28C ***7/12***

U.S. Cl. 366—76 **4 Claims**

1. In a continuous polymerization system that includes a flasher connected to a polymer finisher, the improvement comprising: said flasher having an inlet and a plurality of outlets; one section of pipe leading from said inlet to a location intermediate said inlet and said outlets; a splitter connected to said one section of pipe at its terminal end at said location for splitting said one section of pipe into a plurality of paths; a plurality of sections of pipe each of successively increased diameter connected between said splitter and said outlets, said

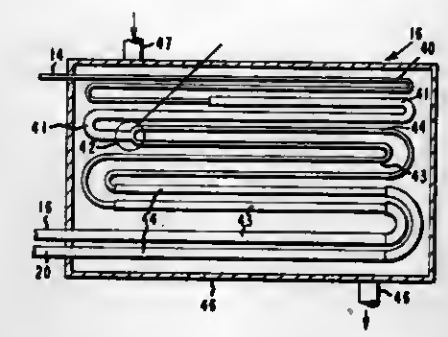

outlets being connected to said finisher; and a heating jacket surrounding said one section of pipe, said splitter and said plurality of sections of pipe.

4,299,499

THROTTLE DEVICE FOR A TWIN-SHAFTED SCREW MACHINE

Dieter H. Buchheit, Nussdorf, Fed. Rep. of Germany, assignor to Werner & Pfleiderer, Stuttgart, Fed. Rep. of Germany

Filed May 28, 1980, Ser. No. 154,089

Claims priority, application Fed. Rep. of Germany, Jun. 20, 1979, 2924800

Int. Cl.³ B29B ***1/10;*** **B01F** ***7/08***

U.S. Cl. 366—85 **13 Claims**

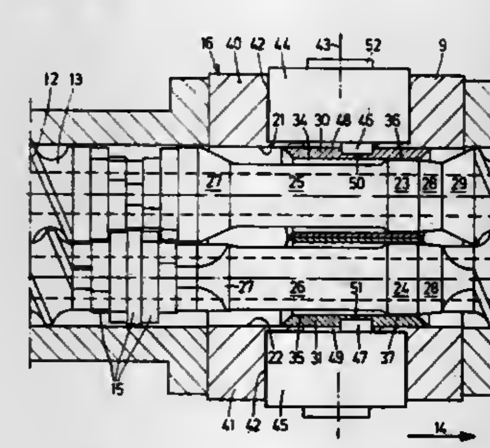

1. In a throttle device for a twin-shaped screw machine having a housing with two mutually penetrating housing bores in which respective screw shafts having mutually meshing screw elements are arranged, each of the housing bores having an outer gap sleeve substantially tightly abutting a wall thereof and each of the screw shafts having an operatively associated inner gap sleeve, the improvement wherein said inner and outer gap sleeves are mutually axially displaceable in order to provide or to modify a gap therebetween for throttling the material to be processed, said outer gap sleeves being guided to prevent relative rotation therebetween, wherein each said gap is formed between a circular cylindrical outer circumference on a corresponding one of said inner gap sleeves and a circular cylindrical internal bore on a corresponding one of said outer gap sleeves so that each said gap comprises an annular cylindrical gap of constant width and of variable length, each said outer gap sleeve being connected to at least one sliding bolt which extends through an associated slot in said housing and is movable from the exterior of said housing.

4,299,500

APPARATUS FOR STORING AND STIRRING VISCOUS LIQUIDS CONTAINED IN CANS

Aldo Bassetti, Milan, Italy, assignor to Miscelatori Dosatori Elettronica MIDEL s.r.l., Italy

Filed Dec. 26, 1979, Ser. No. 106,537

Claims priority, application Italy, Dec. 28, 1978, 31394 A/78

Int. Cl.³ B01F ***7/16***

U.S. Cl. 366—198 **3 Claims**

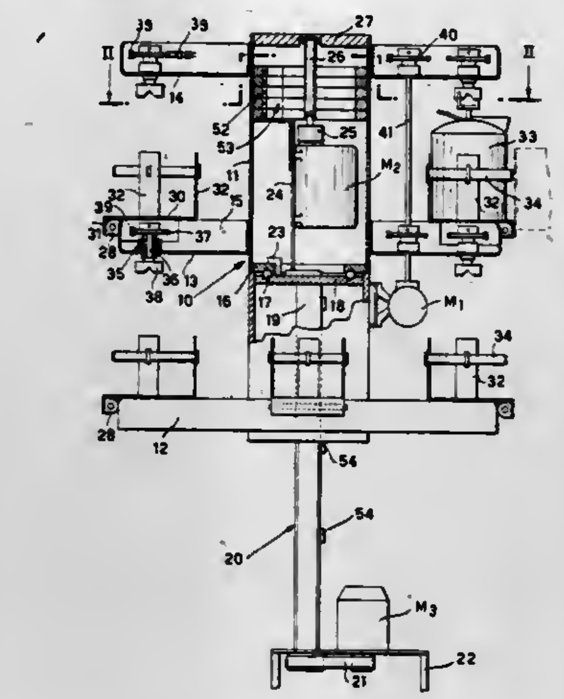

1. An apparatus for storing and stirring viscous liquids, particularly paints contained in cans of the type having stirrers rotatably supported in their lids, comprising

a stand rotatably mounted on a vertical column and comprising a plurality of circular shelves arranged one above the other on said stand,

a plurality of trays mounted on each of two of said shelves adjacent the periphery thereof for tilting movement about horizontal axes, and each tray being arranged to receive one of said cans,

means for releasably securing said cans on said trays,

a coupling member rotatably mounted above each tray and arranged to be releasably connected to the stirrer in the lid of the can disposed on the tray therebeneath,

a first motor disposed on said stand and drivingly connected to each of said coupling members,

a second motor for rotating the stand,

the coupling members for driving the stirrers in the cans that are mounted on the trays on the lower of said two shelves being mounted in the base of the overlying shelf, and

motor-driven lifting means for said stand for moving at least one of the shelves to a pre-determined height at choice.

4,299,501

CONTINUOUS PROCESS FOR THE PREPARATION OF SEMISOLID DISPERSIONS

Deepak R. Patil, Livingston, and Glenn A. VanBuskirk, Bernardsville, both of N.J., assignors to Ortho Pharmaceutical Corporation, Raritan, N.J.

Filed Aug. 10, 1979, Ser. No. 65,665

Int. Cl.³ B01F ***13/00, 15/02, 15/06***

U.S. Cl. 366—349 **4 Claims**

1. A process for preparing a semisolid dispersion which comprises circulating a mixture of an oil phase and an aqueous phase from a main vessel through one or more mixing devices and one or more homogenizers in series until a semisolid dis-

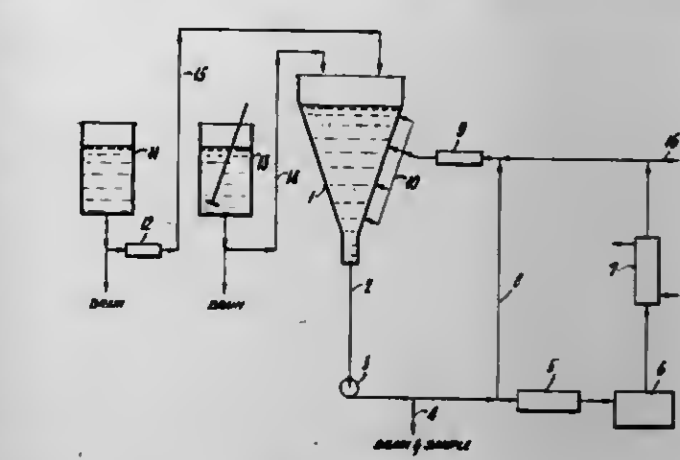

persion is formed and withdrawing the dispersion from the system through a heat exchanger.

4,299,502

ASSEMBLY FOR A DETACHABLE CONNECTION FOR A PRINTING ELEMENT IN AN ELECTRIC OFFICE MACHINE

Kurt J. S. Harre, Karlshamn, Sweden, assignor to Facit Aktiebolag, Stockholm, Sweden

Filed Jan. 7, 1980, Ser. No. 109,751

Claims priority, application Sweden, Jan. 12, 1979, 7900300

Int. Cl.³ B41J ***1/24***

U.S. Cl. 400—144.2 **6 Claims**

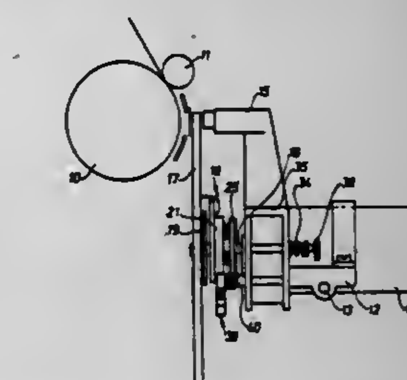

1. In an electric office machine provided with an electric motor in a printing unit having a print element, the improvement comprising an assembly for detachable connection of said print element to the shaft of said electric motor, a platen, a carriage mounting said printing unit for movement along said platen, said print element being disc-shaped having radially extending arms carrying characters thereon, means mounting said carriage for movement together with said printing unit along said platen, said printing unit being mounted to be movable on said carriage between a printing position and a loading position, a dog member, a spring loaded retaining means, said print element being biased against said dog member, the latter being secured to said motor shaft by said spring loaded retaining means, said retaining means being operated to release said print element for replacement by a fixed surface on said carriage engaging said retaining means when said printing unit is moved to a loading position, and wherein said retaining means comprises a fixing plate supporting said print element for movement along said motor shaft between a first position outside the end of said motor shaft in which the print element is released for replacement by a movement which is in a direction transverse relative to said motor shaft, and a second position in which the print element is secured for movement with said motor shaft, and a spring-loaded operating member, said fixing plate being operated to release said print element by said spring-loaded operating member engaging said fixed surface on said carriage.

4,299,503

CHARACTER SELECTION MECHANISM FOR A TYPEWRITER

Tomoyoshi Watanabe; Toshio Nakai; Susumu Kuzuya; Hiroshi Onoda; Akira Asai; Takayuki Iwase, and Kazuo Nakamura, all of Nagoya, Japan, assignors to Brother Kogyo Kabushiki Kaisha, Aichi, Japan

Filed Aug. 7, 1979, Ser. No. 65,145

Claims priority, application Japan, Aug. 12, 1978, 53-110729[U]

Int. Cl.³ B41J *7/34, 1/60*

U.S. Cl. 400—161.5 6 Claims

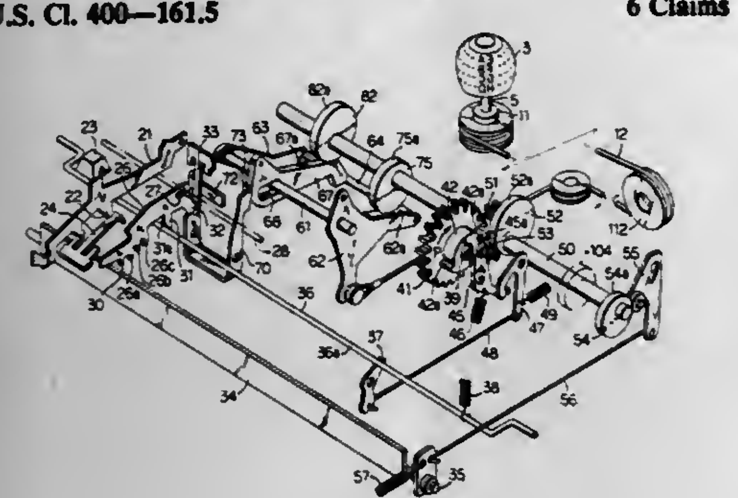

1. A character selection mechanism for a typewriter having a single type head with characters arranged in rows and columns thereon comprising:
a plurality of key levers;
a plurality of interposers arranged under said key levers so as to be movable from an original position to a depressed position and to an operative position;
each of said interposers being moveable from the original position to the depressed position upon a depression of each key lever respectively;
a common drive member movably supported under all of said interposers;
a continuously rotating drive shaft;
a clutch;
a cam shaft connected through said clutch to said drive shaft, said cam shaft being rotated once by said drive shaft each time when said clutch is triggered upon movement of said each key lever to its depressed position;
actuating means including a drive cam on said cam shaft for synchronously moving said common drive member with said cam shaft to actuate the depressed interposer toward the operative position;
a series of additional cams fixed on said shaft;
a series of cam followers assigned individually to each of said additional cams and supported so as to be movable between a first position and a second position,
spring means for biasing said each cam follower to be in continuous contact with a peripheral cam face of each said additional cam confronts thereto and to be normally held in the first positon;
a series of transmitting members arranged between said interposers and said cam followers, each transmitting member having two ends, one of which confronts several of said interposers corresponding to characters arranged in a column or a row, and the other of which abuts a respective said cam follower;
said each transmitting members being movably supported for moving a respective said cam follower from the first position to the second position against biasing force of the spring means when one of said interposers is moved by said common drive member to the operative position and moves its respective confronted transmitting member;
output means being operatively connectable with only the one of said cam followers which is moved to the second position by a respective said transmitting member and being actuated by a respective said cam follower upon a rotation of a respective said cam corresponding thereto; and
connecting means for connecting said output means with said type head to select a character of the type head while said cam follower at the second position is actuated by the rotation of said cam corresponding thereto.

4,299,504

HIGH CAPACITY RIBBON CARTRIDGE WITH SURFACE DRIVE

Bernard D. Benz, Portola Valley; Edward M. Carlin, Jr., Milpitas, and Thomas D. Gross, Los Altos, all of Calif., assignors to Xerox Corporation, Stamford, Conn.

Filed Jul. 3, 1980, Ser. No. 165,513

Int. Cl.³ B41J *32/00*

U.S. Cl. 400—208 13 Claims

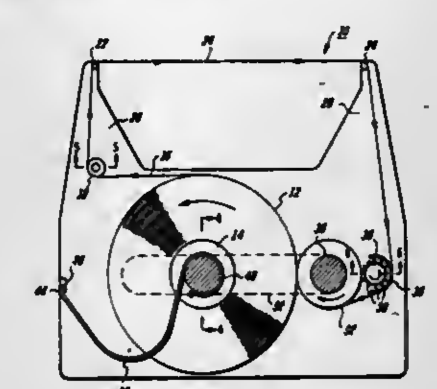

1. A ribbon cartridge for use in printers, typewriters and the like including a housing having substantially planar opposed walls between which there is enclosed a supply spool, a take-up spool and a length of inked ribbon mounted upon said supply spool and extending in a path out of said housing and back into said housing to said take-up spool, said cartridge being characterized by comprising
drive means in contact with the surface of said take-up spool for rotating said spool, said drive means having a fixed center about which it rotates,
guide means in said housing for supporting said supply and take-up spools for rotation about their respective centers and for supporting each of said spools for movement, and
means for urging said supply spool against said take-up spool and said takeup spool against said drive means.

4,299,505

SHIFT MECHANISM

Raymond Clavel, 3, rue Elie Bertrand, 1400 Yverdon (Vaud), Switzerland

PCT No. PCT/CH79/00015, § 371 Date Oct. 7, 1979, § 102(e) Date Jul. 19, 1979, PCT Pub. No. WO79/00597, PCT Pub. Date Aug. 23, 1979.

PCT Filed Feb. 6, 1979, Ser. No. 165,124

Claims priority, application Switzerland, Feb. 7, 1978, 1324/78

Int. Cl.³ B41J *25/24, 5/22*

U.S. Cl. 400—258 4 Claims

1. In a typewriter having a carriage, a shift mechanism including first and second displaceable interlocks respectively corresponding to the lower and upper case, one said interlock being in an active position when the other said interlock is in an inactive position, a primary lever and auxiliary lever each having a pusher respectively engageable with said second and first interlocked, drive means adjacent said interlocks, said interlocks displaceable by said pushers into engagement with said drive means for placing said interlocks in an active position, a pivotally mounted U-shaped part with one portion thereof comprising said auxiliary lever, another portion of said U-shaped part comprising an arm drivingly connected to said second interlock, spring means engaging said U-shaped part to urge said auxiliary lever toward said first interlock, retaining means including a catch engageable by said U-shaped part to limit the pivotal movement of said U-shaped part against the force of said spring means, and said second interlock controllable upon actuation of said primary lever.

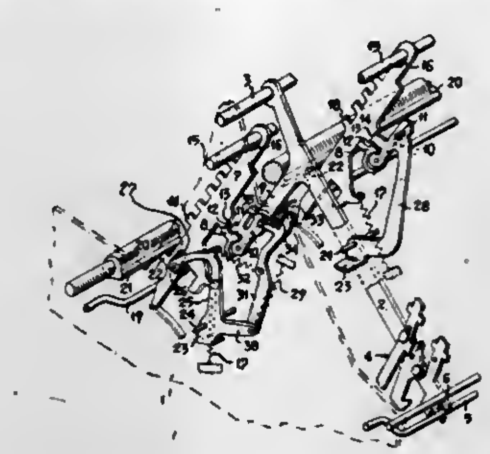

4,299,506

MECHANICAL PENCIL

Junichi Hashimoto, Saitama, Japan, assignor to Pentel Kabushiki Kaisha, Tokyo, Japan

Filed Aug. 29, 1979, Ser. No. 70,741

Claims priority, application Japan, Aug. 31, 1978, 53-106459; Oct. 31, 1978, 53-134119; Nov. 28, 1978, 53-163668[U]; Feb. 14, 1979, 54-17949[U]

Int. Cl.³ B43K *21/08*

U.S. Cl. 401—72 13 Claims

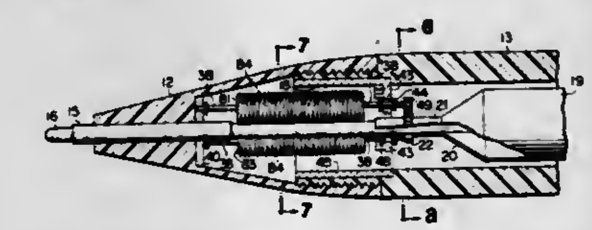

1. A mechanical pencil comprising: a casing having a ferrule at its one end and having a central bore which extends axially thereof; a lead-containing sleeve capable of containing a plurality of leads and fitted into the central bore and having its rear end closed by a cover which is detachably mounted on the casing, the front end of the sleeve having a narrowed portion having an opening in alignment with the sleeve axis and a diameter slightly greater than that of the lead; a lead guide pipe mounted in the ferrule so as to be aligned with the axis of the central bore and slidably holding the lead; lead feed means located intermediate the lead guide pipe and the lead-containing sleeve and including at least one lead feed roller having a helical rib on its periphery for engagement with the outer peripheral surface of the lead, said feed roller having a frustoconical configuration with its axis located in a plane which includes the axis of the lead guide and which is disposed at an angle with respect to the axis of the lead guide, the feed roller being supported so as to be slidable in its axial direction; drive means for rotating the lead feed roller about its axis; and operating means mounted on the outside of the casing for operating the drive means.

4,299,507

TWO-PIECE CONTROLLED MOTION HINGE COUPLER JOINT

Josiah W. Collins, II, 307 E. Jackson St., P.O. Box 13, Macomb, Ill. 61455

Continuation-in-part of Ser. No. 1,054, Jan. 4, 1979, abandoned. This application Oct. 1, 1979, Ser. No. 81,025

Int. Cl.³ F16C *11/00;* F16D *1/12;* F16L *3/22*

U.S. Cl. 403—116 7 Claims

1. A coupling device for articulated elements comprising: a body portion having two parallel apertures for accepting elements, with each aperture including a circumferentially extending groove disposed in walls associated therewith, and a pin means for insertion in said groove and through an articualted element disposed in said aperture, said coupling device further including at least two radially opposed axially

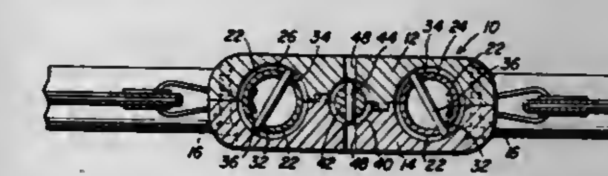

extending slots in an aperture wall in communication with said circumferentially extending groove for locking the articulated elements against rotational motion, said pin means being selectively positionable within said axially extending slots to effect said locking.

4,299,508

CONNECTORS FOR THE CONSTRUCTION OF HOLLOW TUBE MOUNTING FRAMEWORKS

Franz Kerscher, Munich, and Guenther Schaffer, Augsburg, both of Fed. Rep. of Germany, assignors to Siemens Aktiengesellschaft, Berlin & Munich, Fed. Rep. of Germany

Filed Mar. 11, 1980, Ser. No. 129,391

Claims priority, application Fed. Rep. of Germany, Mar. 22, 1979, 2911330

Int. Cl.³ F16B *7/00*

U.S. Cl. 403—172 5 Claims

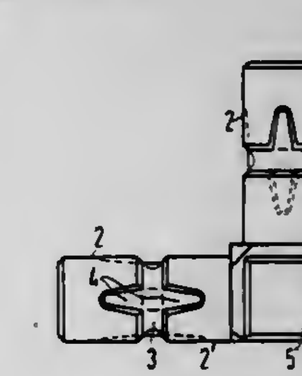

1. A connector system for the construction of metal hollow tube mounting frameworks, comprising: metal hollow tubes for the framework; at least two metal connection pieces connected together at a point of intersection, said connection pieces each having adhesion glue accepting grooves on a periphery thereof which lie adjacent interior walls of the respective hollow tubes to be glued together to construct the framework; the adhesion grooves comprising at least one central groove which extends entirely around a periphery of the connection piece, and from this central groove branching grooves are directed outwardly therefrom along a portion of a length of each connection piece but which terminate before an end of the connection piece; a glue application aperture in the hollow tube positioned to align with the adhesion grooves; and a gap between the hollow tube inner surface and respective connection piece outer surface permitting air to escape out ends of the tube.

4,299,509

BEAM CONNECTOR

Gerhard Meickl, Ockenfels, Fed. Rep. of Germany, assignor to Streif oHG, Linz, Fed. Rep. of Germany

Filed Aug. 24, 1979, Ser. No. 69,595

Claims priority, application Fed. Rep. of Germany, Aug. 31, 1978, 2838053

Int. Cl.³ F16B *9/00*

U.S. Cl. 403—252 22 Claims

1. A connection of a structural part such as a beam having a

longitudinal axis with another structural part, said connection comprising:

a first plate fastened to said beam in a torsion proof manner in a vertical plane extending in a direction parallel to said longitudinal axis, said first plate including connecting means in the form of a vertically extending hook including a horizontal supporting area at the lower end of said hook and two vertical contact areas; and

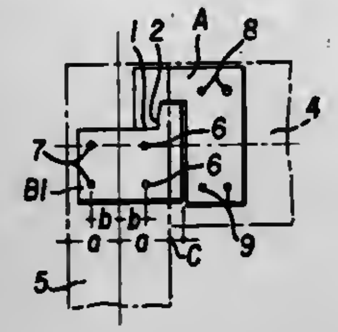

a second plate fastened to said other structural part, said second plate extending vertically in the same plane as said first plate, said second plate including connecting means in the form of fitting areas for said supporting area and said contact areas,

wherein said first plate transfers vertical forces to said second plate via said horizontal supporting area and said contact areas.

4,299,510
DRILL STEEL AND METHOD OF FABRICATION
Kenneth C. Emmerich, and Donald K. Chrise, both of Lexington, Ky., assignors to Fansteel Inc., North Chicago, Ill.
Filed Dec. 7, 1978, Ser. No. 967,274
Int. Cl.^{3} F16B *11/00*
U.S. Cl. 403—282 **5 Claims**

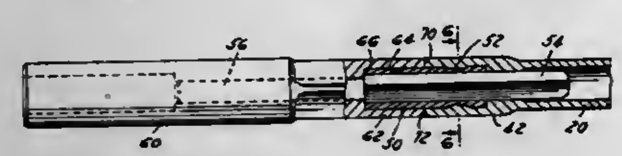

1. A drill steel for use in a tandem string of telescopically joined drill steels for rock and roof drilling which comprises:

(a) a tubular drill steel having a straight internal passage of a first predetermined cross-sectional dimension,

(b) an enlarged end formed on said drill steel having a straight cylindrical recess with a second internal cross-sectional dimension larger than said first cross-sectional dimension and coextensive from its free end with said enlarged end and terminating in a common plane with the end of said passage of a first predetermined cross-sectional dimension, and with said plane being normal to said recess and intermediate said enlarged end,

(c) a male insert of straight cylindrical shape having one end projecting into said cylindrical recess of said enlarged end of said drill steel and formed with an internal cross-sectional dimension substantially equal to and continuous with said first cross-sectional dimension and an external cross-sectional dimension equal to and interfitted with the said second internal cross-sectional dimension of said enlarged end of said drill steel, the other end of said cylindrical insert projecting from said enlarged end of said drill steel, said enlarged end forming a stop shoulder intermediate said insert to locate an adjacent telescoped drill steel, and

(d) means on said interfitting surfaces of said drill steel and said insert mechanically interlocking said drill steel and said insert.

4,299,511
CONNECTOR AND IMPERFORATE REINFORCEMENT PLATES IN COMBINATION
Harlan J. Demers, Marshallville, Ohio, assignor to Koppers Company, Inc., Pittsburgh, Pa.
Filed Mar. 27, 1980, Ser. No. 134,560
Int. Cl.^{3} B25G *3/28*
U.S. Cl. 403—282 **15 Claims**

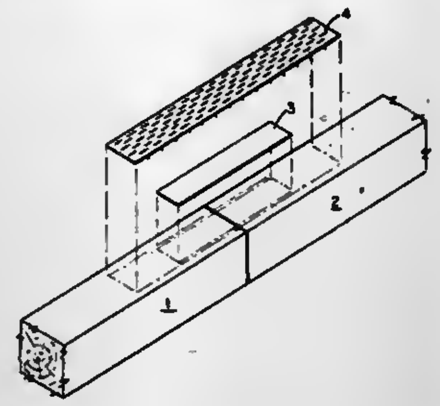

1. A connector plate combination for connecting wooden members comprising a connector plate and an underlying substantially imperforate reinforcement plate, said connector plate having a body portion and a plurality of teeth extending generally transversely outwardly from said body portion, the central portion of said body portion overlying said reinforcement plate, and a plurality of said teeth being forced through said substantially imperforate reinforcement plate.

4,299,512
MEANS FOR YIELDABLY COUPLING A SHAFT TO COUNTER WHEELS OR THE LIKE
Friedemann Wagner, Furtwangen, Fed. Rep. of Germany, assignor to Ernst Reiner KG Feinmechanik und Apparatebau, Furtwangen, Fed. Rep. of Germany
Filed Nov. 6, 1979, Ser. No. 91,398
Claims priority, application Fed. Rep. of Germany, Nov. 6, 1979, 2848039
Int. Cl.^{3} B25G *3/28*
U.S. Cl. 403—357 **19 Claims**

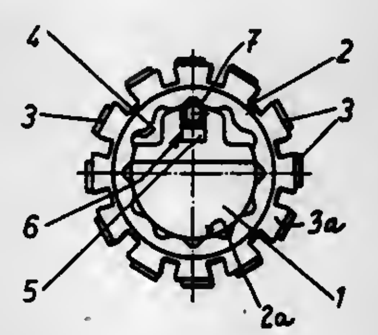

1. In a device for applying or exhibiting indicia, the combination of a shaft having a peripheral surface and a recess provided in said peripheral surface and extending in parallelism with the axis of the shaft; at least one wheel having an internal surface rotatably surrounding said shaft and provided in said internal surface with at least two sockets which are spaced apart from each other, as considered in the circumferential direction of said shaft; and means for yieldably coupling said wheel to said shaft, including a helical spring extending in parallelism with the axes of the shaft and having a first portion in said recess and a second portion projecting from said recess and normally extending into one of said sockets, said internal surface having means thereon which will result in said second portion being expelled from said one socket to penetrate at least in part into said recess in response to the application of a predetermined torque to said shaft in a direction to rotate the latter relative to said wheel or vice versa and said second portion of said spring being free to enter the other of said sockets when said other socket registers with said recess.

4,299,513
EDGE-SHAPING TOOL FOR FORMING SURFACE OF WET CONCRETE IN REGIONS ABUTTING A JOINT
William J. Stegmeier, 1073 Shary Cir., Concord, Calif. 94520
Filed Nov. 9, 1979, Ser. No. 92,982
Int. Cl.^{3} E01C *19/22*
U.S. Cl. 404—97 **23 Claims**

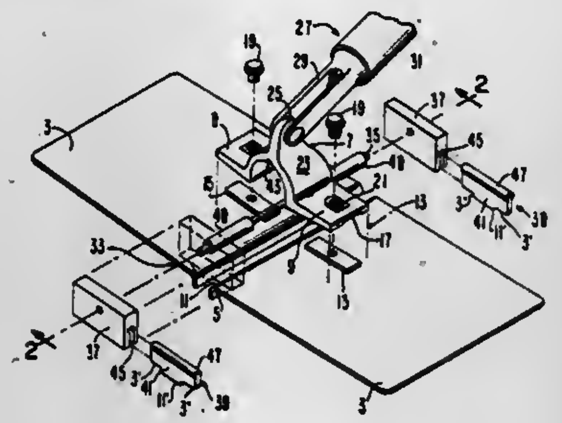

12. A tool for shaping and smoothing the uncured surface of a cure-hardening medium in the regions thereof abutting and adjacent a septum in the surface of said medium, comprising: a pair of forming members, each forming member providing a forming surface of a shape and relative orientation selected to generally conform to the desired surface shape of said medium in said regions, each of said forming members having an edge which is spaced from and faces a corresponding edge on the other of said forming members, said edges defining a gap therebetween of a width sufficient to receive a surface portion of said septum, a bridge member mechanically interconnecting said forming members and extending across said gap, first and second resilient wiper blocks positioned generally across and extending within said gap, and a spring beam extending between said bridge member and said first and second wiper blocks, said bridge member including an arch portion extending over said gap and being spaced away from the adjacent surfaces of said forming members, said spring beam, wiper blocks and arch portion being so dimensioned as to: permit said blocks to be positioned with one block on each side of said arch portion with said spring beam extending through said arch portion; cause said spring beam to be deflected by said arch portion to generate a spring compressive force for all maintaining said blocks in position.

4,299,514
COLLAPSIBLE RUBBER DAM
Tateo Muramatsu, and Mamoru Kurihara, both of Yokohama, Japan, assignors to Bridgestone Tire Co., Ltd., Tokyo, Japan
Filed Sep. 7, 1979, Ser. No. 73,333
Claims priority, application Japan, Dec. 6, 1978, 53/166963[U]; Dec. 6, 1978, 53/166964[U]; Dec. 11, 1978, 53/169021[U]; Dec. 20, 1978, 53/175165[U]; Dec. 21, 1978, 53/174258[U]; Dec. 22, 1978, 53/177612[U]; Dec. 22, 1978, 53/160336; Feb. 6, 1979, 54/14273[U]; Feb. 9, 1979, 54/15758[U]; Feb. 26, 1979, 54/22849[U]; Mar. 2, 1979, 54/25547[U]; Jun. 2, 1979, 54/68223
Int. Cl.^{3} E02B *7/04*
U.S. Cl. 405—115 **10 Claims**

1. A collapsible rubber dam comprising; a flexible plate body composed of a rubbery elastomeric material, flexible plate body provided in the uninflated state with at least one split portion at a predetermined position in a thickness direction and extending along a lengthwise direction thereof; said split portion terminating with a solid flange portion extending in the thickness direction; said solid flange portion eliminating any folds in said plate body thereby reducing stresses and cracking in the uninflated state; means for securing said plate body airtightly to a riverbed and a riverbank; said split portion in an

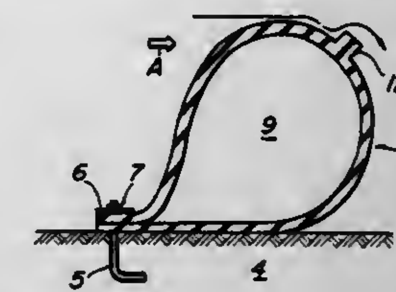

inflated state defining an inflated chamber and receiving a supply of inflating fluid.

4,299,515
ROCK REINFORCEMENT SYSTEM
Jan B. Yates, Reynoldsburg, and Benjamin M. Bartilson, Columbus, both of Ohio, assignors to The Eastern Company, Naugatuck, Conn.
Filed Jan. 16, 1980, Ser. No. 112,522
Int. Cl.^{3} E21D *20/02;* **F16B** *20/02*
U.S. Cl. 405—259 **12 Claims**

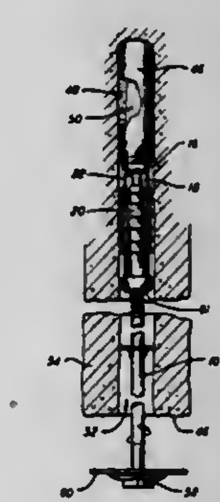

1. Mine roof bolt anchoring apparatus for use in conjunction with a conventional two-compartment resin grouting cartridge inserted into a blind drill hole in the mine roof ahead of said apparatus, the latter comprising, in combination:

(a) an elongated bolt having a head at one end and threaded for a portion of its length from the other end;

(b) an expansion anchor including a tapered nut having a threaded, axial bore for engagement with the threads of said bolt, and a hollow expansion shell to engage said nut with the smaller end thereof extending into the upper end of said shell;

(c) first stop means affixed to the larger end of said tapered nut and extending therefrom in an axial direction;

(d) a collar encircling and affixed to the threaded end of said bolt above said expansion anchor; and

(e) second stop means affixed to the surface of said collar facing the larger end of said nut, and extending from said surface toward said larger end of said nut; whereby

(f) upon counterclockwise rotation of said bolt, tending to withdraw the threaded end thereof from engagement with said nut, said second stop means contacts said first stop means and rotates said anchor with said bolt and collar, and upon clockwise rotation of said bolt with said anchor rotationally restrained, said bolt is advanced through said nut as said collar surface is moved away from said larger end of said nut to allow said second stop means to clear said first stop means, thereby moving said nut axially into said shell to effect expansion thereof against the wall of said drill hole.

4,299,516

METHOD FOR IMPROVING THE STRENGTH OF A WATER-SATURATED SOFT SOIL

Hajime Miyoshi, Koganei; Ikuo Okabayashi, Yamato, and Etsuo Asanagi, Kashiwa, all of Japan, assignors to Chiyoda Chemical Engineering & Construction Co., Ltd., Kanagawa, Japan

Filed Jan. 25, 1980, Ser. No. 115,491

Claims priority, application Japan, Jan. 29, 1979, 54-8915

Int. Cl.³ C09K *17/00;* **E02D** *3/12*

U.S. Cl. 405—266 **3 Claims**

1. A method for improving the strength of a water-saturated soft soil, which comprises admixing the soft soil with an ingredient A comprising gypsum and an ingredient B comprising a mixture of 40–50% by weight of a Portland cement and 60–45% by weight of a water-granulated iron blast furnace slag, the slag having a particle size almost the same as or less than that of the cement, the ratio by weight of the ingredient A to the ingredient B being within the range from 10/90 to 30/70, the soft soil first being admixed with the ingredient A so that the soft soil may be made reactive with the ingredient B which is subsequently added to the admixture of the soft soil and the ingredient A.

4,299,517

MINE ROOF SUPPORTING STRUCTURE

Gottfried Siebenhofer, Vienna; Heinrich Snessenbeck, and Alfred Zitz, both of Zeltweg, all of Austria, assignors to Voest-Alpine Aktiengesellschaft, Vienna, Austria

Filed Jan. 23, 1980, Ser. No. 114,599

Claims priority, application Austria, Feb. 14, 1979, 1134/79

Int. Cl.³ E21D *15/44*

U.S. Cl. 405—296 **6 Claims**

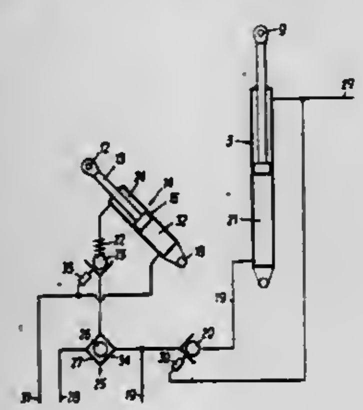

1. A mine roof support structure for consolidating mines comprising: a floor frame having a front end and a back end, at least one roof-supporting cap protruding over the front end of said floor frame and supported from said floor frame by means of piston-type hydraulic props, a shield linked to said cap and connected to said floor frame by at least one link lever which is pivotally attached to said floor frame and pivotally attached to said shield at a pivot point in a manner such that downward movement of said cap during a roof collapse causes said pivot point to move backward, a hydraulic cylinder-piston arrangement connected between said floor frame and said pivot point for forcing said pivot point forwardly when said arrangement is pressurized from a pressure source; and control means associated with said props and with said cylinder-piston arrangement for supplying a predetermined pressure to said props and for pressurizing said cylinder-piston arrangement after said predetermined pressure has been supplied to said props and for thereafter supplying a higher pressure to said props.

4,299,518

MANUFACTURING WORK STATION

Paul L. Whelan, Dallas, Tex., assignor to Texas Instruments Incorporated, Dallas, Tex.

Filed Mar. 3, 1980, Ser. No. 126,226

Int. Cl.³ B65G *51/02*

U.S. Cl. 406—62 **10 Claims**

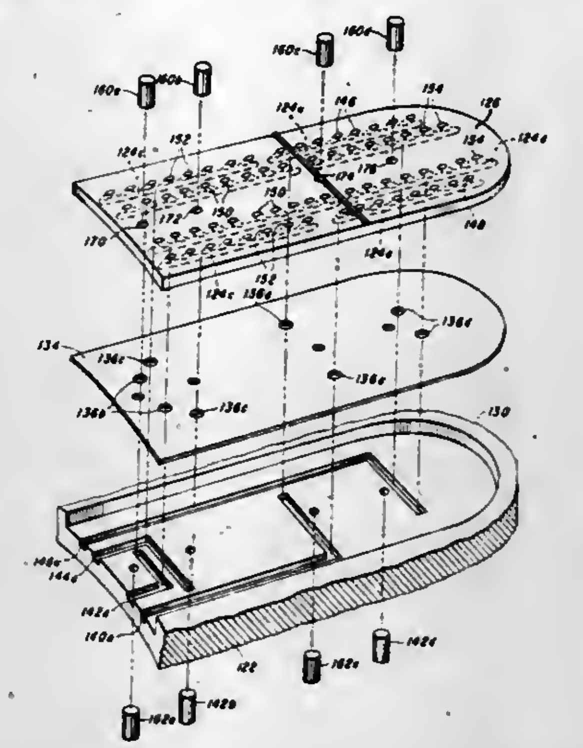

1. A work station for performing a manufacturing operation on an article comprising:

a base having a recess therein at least as large as said article, said recess having a plurality of grooves therein;

a spacer plate overlying said recess and having an aperture over each of said base plate grooves;

a track insert plate overlying said spacer plate and having a plurality of grooves therein over each of said spacer apertures; and

at least one slanted hole coupled through said track insert plate to each of said track insert plate grooves such that when gas is applied to selected base grooves, gas is transmitted through said slanted holes to move the article in said work station.

4,299,519

TWO PIECE FASTENER AND INSTALLATION TOOL

Robert J. Corbett, Saugerties, N.Y., assignor to Huck Manufacturing Company, Irvine, Calif.

Continuation of Ser. No. 2,582, Jan. 10, 1979, abandoned. This application Apr. 29, 1980, Ser. No. 144,846

Int. Cl.³ F16B *19/05;* **B21J** *15/00*

U.S. Cl. 411—361 **32 Claims**

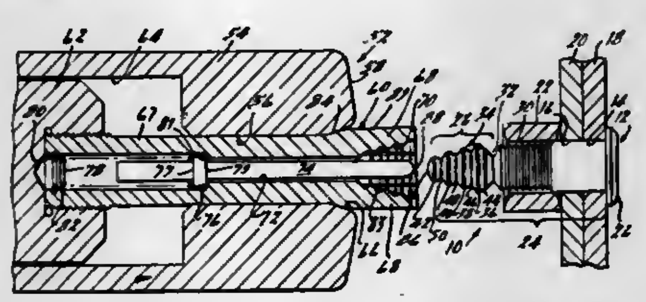

1. In a system for securing a plurality of workpieces including a two piece pull-type fastener comprising a pin and a swageable collar, an installation tool having a collet assembly including a jaw portion having a plurality of teeth engageable with a plurality of pull grooves provided on said pin and an anvil engageable with said collar, said jaw portion being operative to exert a pulling force on said pin so as to cause said anvil to swage said collar into engagement with a plurality of locking grooves provided on said pin, improved means for enabling said installation tool to exert said pulling force on said pin so as to thereby set said fastener comprising at least a predetermined number of pull grooves provided on said pin, said plurality of teeth on said jaw portion being at least equal to said predetermined number of pull grooves, disabling means on said installation tool and said pin for preventing gripping engagement by said teeth of less than said predetermined number of pull grooves whereby stripping of any of said predetermined number of pull grooves by applying said pulling force through less than all of said predetermined number of pull grooves is inhibited.

4,299,520

DRIVE NUT

Yukichi Iwata, Tokyo, Japan, assignor to Iwata Bolt Kogyo Kabushiki Kaisha, Tokyo, Japan

Filed Jan. 4, 1980, Ser. No. 109,588

Int. Cl.³ F16B *37/00, 39/286*

U.S. Cl. 411—437 **5 Claims**

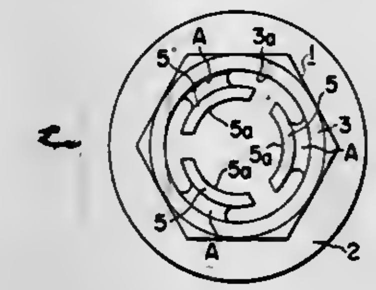

1. A drive nut for screw fastening in cooperation with a mating member having a male screw thread, said drive nut having an axial centerline and comprising, an integrally constructed combination: a crown coaxial with the centerline; a bottom portion disposed coaxially with an contiguously below the crown, the crown and the bottom portion having a coaxial hole formed therethrough and defined by an inner wall surface; and a plurality of clamping members disposed with constant spacing around a common circle about the centerline and together forming an intermittent, substantially cylindrical structure spaced radially inward from said inner wall surfce with an annular gap therebetween and having a hollow interior through which the mating member is forcibly thrust in axial direction for said screw fastening, said hollow interior being defined by unthreaded internal faces of the clamping members, said unthreaded internal faces comprising the radially inwardmost components of said drive nut so that a mating member driven through the drive nut will engage only the unthreaded internal faces of the clamping members, each clamping member being rigidly connected at the root part thereof to said inner wall surface and constituting a form of a cantilever which is capable of being elastically deflected radially outwardly from the centerline by the mating member, said drive nut being formed of a material which enables the unthreaded internal faces of the clamping members to be bitten into by the screw threads of a mating member forcibly thrust into said hollow interior.

4,299,521

APPARATUS FOR SPREADING AND FEEDING OF ARTICLES OF FLATWORK

Jorgen M. Jensen, Blerges, Belgium, assignor to Ejnar Jensen & Son A/S, Ronne, Denmark

Filed Oct. 23, 1979, Ser. No. 87,349

Int. Cl.³ B08B *1/00*

U.S. Cl. 414—13 **6 Claims**

1. In apparatus for spreading and feeding of articles of flatwork, said apparatus comprising a horizontally extending conveyor, a pair of clamps supported for selective movement only transversely of the conveyor, and which are reciprocated between adjacent positions opposite a middle portion of the conveyor where the clamps are accessible from the front of the conveyor for connection of the upper corners of a flatwork piece to extend downwardly from the clamps in front of the upstream end of the conveyor and spaced apart positions where the upper end of the clamped flatwork piece is taut prior to release thereby from the clamps, the improvement comprising flatwork piece carrier means reciprocable between an extended forward position below the path of movement of the clamps and a retracted rear position above the conveyor and behind the upstream end thereof, said carrier means in its extended forward position engaging a portion of the flatwork

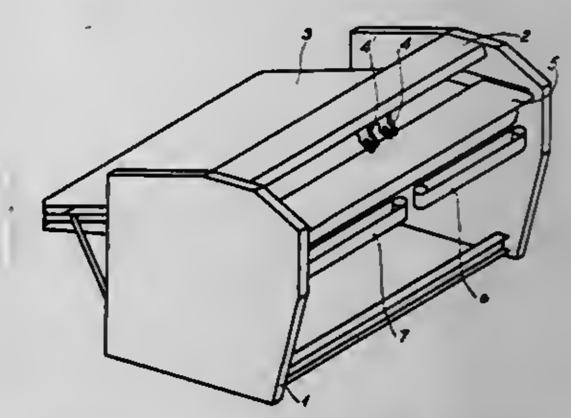

piece extending down from the clamps and holding the same out of engagement with said conveyor, at least a part of said carrier means in the path of movement of said carrier means between said extended and retracted positions being positioned beneath the clamps so that the clamped taut upper end of the flatwork piece can fall thereupon upon release of the flatwork piece from the clamps, and said carrier means during its return to said retracted position pulling the flatwork piece upon the conveyor and then losing engagement therewith so that the leading end of the flatwork piece also drops upon the conveyor.

4,299,522

TRACTOR-MOUNTABLE FRONT AND REAR BALE-IMPALING HAY-CARRIERS

Roy C. Barton, 724 Main St., Mt. Vernon, Ill. 62864, and Dale A. Smith, Mt. Vernon, Ill., assignors to Roy C. Barton, Waltonville, Ill.

Filed Oct. 9, 1979, Ser. No. 82,655

Int. Cl.³ A01D *87/12*

U.S. Cl. 414—24.5 **1 Claim**

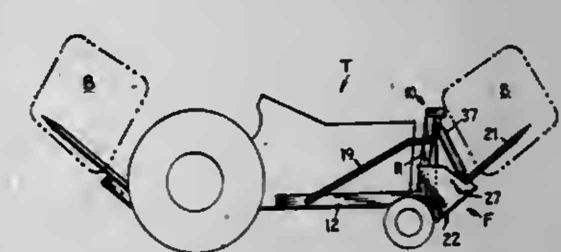

1. The combination of (A) a farm-type tractor having a laterally disposed and rearwardly extending hydraulically powered lifting arm on each side thereof, with (B) easily detachable structures for converting said tractor into a front-and-rear load-balanced hay-bale carrier, said detachable structures comprising: a first parallel pair of pointed hay-bale-impaling tines rigidly attached to the rear ends of said powered lifting arms, substantially as extensions thereof, to constitute a rear bale-carrier, an upright delta-shaped rigid frame spanning and close to the front of said tractor; a horizontally disposed bar bolted to each side of the chassis of said tractor and fixed at its front end to a lower portion of said delta-shaped frame; a bracing bar rigidly connecting each said horizontally disposed bar to an upper portion of said delta-shaped frame; a second parallel pair of pointed hay-bale-impaling tines pivotally con-

nected each to an opposite lower lateral portion of said delta-shaped frame and extending forwardly therefrom; and a hydraulic cylinder operatively connected between an upper portion of said delta-shaped frame and said second pair of tines toward their rear ends for swinging them upwardly to lift and carry a hay bale by and on said tines after their horizontal penetration into said hay bale.

4,299,523
MACHINE FOR STACKING MESH GRIDS WITH ALTERNATE GRIDS ROTATED THROUGH 180°
Hans Gött; Peter Fürndörfler; Fred Kögl; Klaus Ritter, and Gerhard Ritter, all of Graz, Austria, assignors to EVG Entwicklungs-und Verwertungs-Gesellschaft m.b.H., Graz, Austria
Filed Nov. 8, 1979, Ser. No. 92,585
Claims priority, application Austria, Nov. 8, 1978, 7999/78
Int. Cl.³ B65G *57/081*
U.S. Cl. 414—55 4 Claims

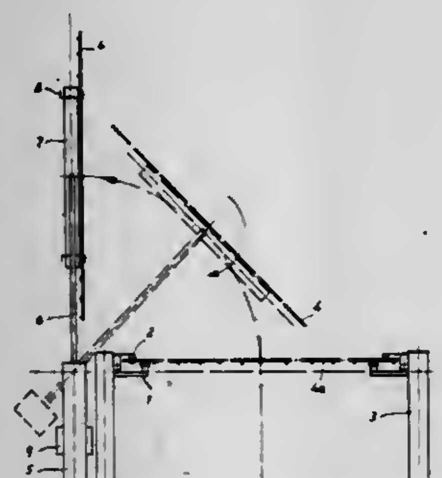

1. A machine for stacking mesh reinforcement grids, said machine defining a feed path for said grids and having a frame, said frame being equipped with automatically actuated holding elements for picking up and releasing said mesh reinforcement grids at said feed path; a pair of swivelling arms, said arms being movable upwards from an initial lower, picking-up position to a raised position, said frame being mounted on and rotatable about a longitudinal axis defined at the free ends of said arms, said frame being adapted to be turned over relative to its initial position through 180° when said arms are in the raised position, the improvement comprising means for coupling together said arms and said frame on upward swivelling of said arms, to cause said frame and said arms to swivel in opposite directions relative to one another, said means causing said frame and said arms to be aligned with one another in said raised position, and means for locking said frame in position on said swivelling arms whereby said frame and said arms can be swivelled back into the initial position together; and guide rails adapted to be introduced into said feed path for support of said grids, said guide rails being arranged to receive and support a grid which is not to be turned over, after swivelling of said frame out of its initial position, said guide rails also being adapted to release said second mesh reinforcement grid before said first grid is returned on said frame to said lower position whereby said first turned-over grid is released and stacked on top of the second grid.

4,299,524
DEVICES FOR AUTOMATICALLY SUPPLYING TUBULAR WORKPIECES
Kiyoshi Sawada, Shizuoka; Nobuo Ozawa, Mishima; Katsuhiko Oota, Numazu; Takefumi Narahara; Masahiro Nakagawa, both of Yokohama, all of Japan; Yoshinobu Fujimori, deceased, late of Yokohama, Japan, and by Tomoyoshi Fujimori, heir, Takaoka, Japan, assignors to Toshiba Kikai Kabushiki Kaisha and Nippon Kokan Kabushiki Kaisha, both of Tokyo, Japan
Filed Jan. 18, 1980, Ser. No. 113,217
Claims priority, application Japan, Jan. 24, 1979, 54-6974
Int. Cl.³ B65G *59/02*
U.S. Cl. 414—117 7 Claims

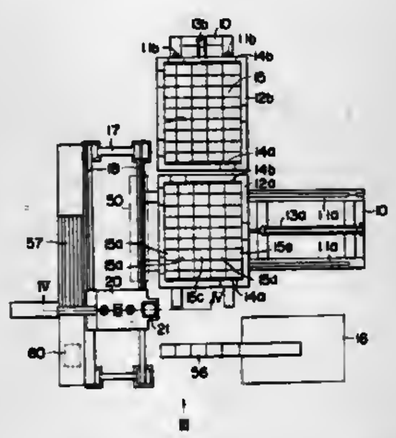

1. A device for automatically supplying tubular workpieces, comprising at least one carriage reciprocable between a loading position and an unloading position, in the former position the carriage being loaded with a stack of tubular workpieces in the form of a plurality overlayed layers, each including a plurality of transversely aligned rows, and each row including a number of longitudinally aligned tubular workpieces and in the latter position the tubular workpieces thus stacked up being delivered sequentially, a stationary horizontally extending structural frame provided near the unloading position, a movable frame reciprocable horizontally on the structural frame in a direction perpendicular to the length of the tubular workpieces stacked up on the carriage, a pick-up member mounted on the movable frame to be movable vertically, a workpiece carrying bar provided on the pick-up member to be reciprocable horizontally in the longitudinal direction of the tubular workpieces through the internal bores of the tubular workpieces arranged in a row, and means for controlling the movable frame and the pick-up member so that the axial line of the workpiece carrying bar successively coincides with the longitudinal axes of the tubular workpieces stacked up on the carriage in layers and rows.

4,299,525
LUG LOADER
Robert G. Coffman, Rte. 3, Box 415-C, Gate City, Va. 24251
Filed May 2, 1980, Ser. No. 146,059
Int. Cl.³ F27D *3/04*
U.S. Cl. 414—181 7 Claims

1. A tool for inserting logs through a door opening of a wood-burning stove which comprises means defining a cradle including at least one pair of arms arranged in a V-shape and proportioned to support at least the major portion of the length of a log, an elongated handle attached to said cradle, said cradle being generally parallel to the longitudinal axis of the log to be supported, an extension for said elongated handle, said extension being pivotally attached to said elongated handle for movement from a position in alignment with said elongated handle to a position generally perpendicular to said handle whereby said cradle may be supported on the door opening of the stove in a generally horizontal position when said handle extension is in the perpendicular position for placing a log on said cradle and said cradle may be moved into said

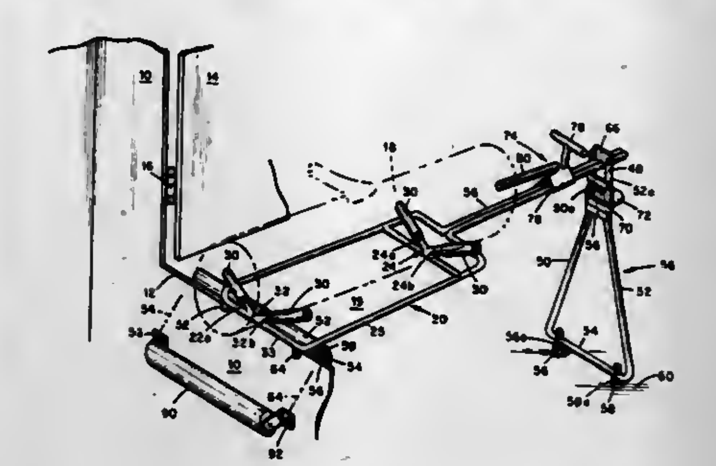

stove when said handle extension is in the aligned position with said elongated handle.

4,299,526
BATTERY CHANGING APPARATUS
John W. Smith, Columbus, Ohio, assignor to Dresser Industries, Inc., Dallas, Tex.
Filed May 16, 1979, Ser. No. 39,528
Int. Cl.³ B61K *11/00*; B65G *67/02*
U.S. Cl. 414—392 4 Claims

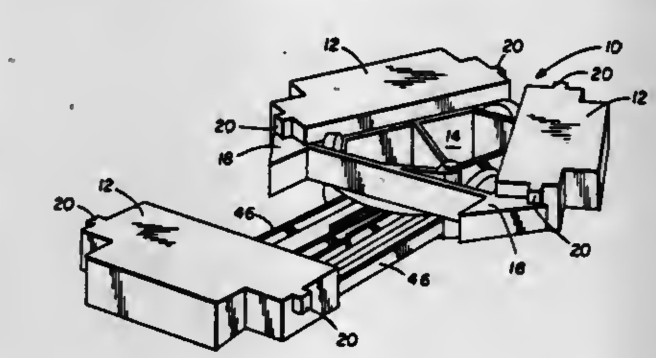

1. A battery changing apparatus for replacing a spent battery with a charged one, which is particularly suitable for servicing electrically powered vehicles in an underground mine, comprising:

a turntable having a stationary base, and a support rotatably mounted on said base and having two or more battery receiving and supporting stations;

a battery transfer means located in association with the turntable and having elevatable means for lifting a battery free of a vehicle or battery support station and reciprocatory means for moving said elevatable means into position relative to the turntable wherein said elevatable means can lower said battery into one of said battery support stations, wherein said battery transfer means can be used alternatively for lifting a battery free of the turntable support, moving it into position relative to a vehicle and lowering it onto said vehicle; and

means for selectively rotating the turntable to position a selected battery support station in assocation with the battery transfer means.

4,299,527
WHEELCHAIR LOADING AND UNLOADING DEVICE
Anthony B. Pobocik, deceased, late of Swartz Creek, Mich.; by Rose Pobocik, heir; by Marion Turner nee Pobocik, heir, Gaines, Mich.; by Bernard Pobocik, heir, Flushing, Mich.; by Michael Pobocik, heir, Gaines, Mich.; by James Pobocik, heir, Swartz Creek, Mich.; by Thomas Pobocik, heir, Flushing, Mich.; by Robert Pobocik, heir, Flint, Mich., and by Agnes Pobocik, heir, 3293 S. Seymour Rd., Swartz Creek, Mich. 48473, assignors to Agnes Pobocik, Swartz Creek, Mich.
Filed Apr. 11, 1980, Ser. No. 139,554
Int. Cl.³ B60P *3/06*
U.S. Cl. 414—462 7 Claims

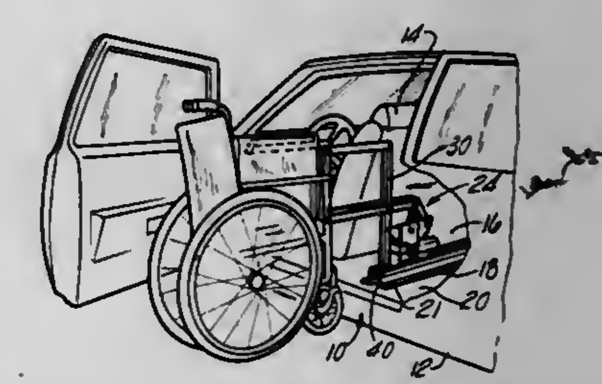

1. A device for loading and unloading a collapsible wheelchair into and out from a motor vehicle, said wheelchair having a flexible seat, said device comprising:

an elongated track secured to said motor vehicle,

a carriage assembly longitudinally movably mounted on said track, said carriage assembly including means for engaging a wheelchair exteriorly of the motor vehicle, said engaging means comprising an elongated bar adapted to be positioned underneath and engaging said flexible seat, and means for moving said elongated bar between a lower position and an upper position to elevate the wheel chair by its flexible seat; and

motor means for longitudinally driving said carriage assembly along said track.

4,299,528
COMBINATION WHEELCHAIR LIFT AND STEPS FOR VEHICLE DOORWAYS
James E. Kazell, and Joseph Kazell, both of Box 5036, Regina, Saskatchewan, Canada
Filed Feb. 25, 1980, Ser. No. 124,241
Int. Cl.³ B60P *1/44*
U.S. Cl. 414—546 24 Claims

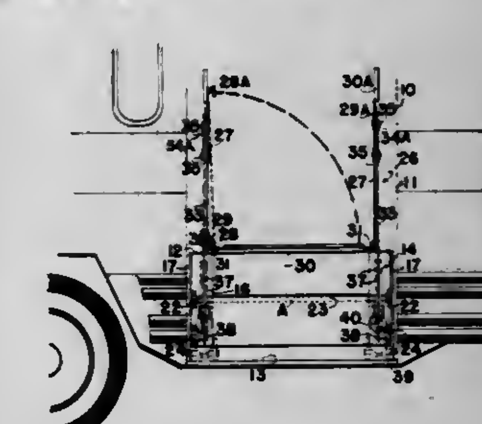

1. In a vehicle doorway opening which includes an upper vehicle floor portion and a lower vehicle base portion; a selectively operable wheelchair lift assembly in said doorway, said lift assembly comprising in combination a pair of spaced and parallel side panels and a floor panel, at least the front portion of said floor panel being hinged adjacent the base of one of said side panels and being movable from a load receiving platform

position to a substantially vertical stored position against the side panel to which it is hinged, and vice versa, a linkage arm assembly mounting said lift assembly for movement between a ground engaging position outside of said vehicle doorway to a vehicle floor engaging position within said vehicle and vice versa and means operatively connected to said lift assembly for moving same from one position to the other.

4,299,529
AUTOMATED DEVICE
Hajimu Inaba, Hino, and Shigemi Inagaki, Musashino, both of Japan, assignors to Fujitsu Fanuc Limited, Tokyo, Japan
Filed Jan. 23, 1979, Ser. No. 5,800
Claims priority, application Japan, Jan. 31, 1978, 53-9662[U]
Int. Cl.^{3} B25J *9/00*
U.S. Cl. 414—590 **3 Claims**

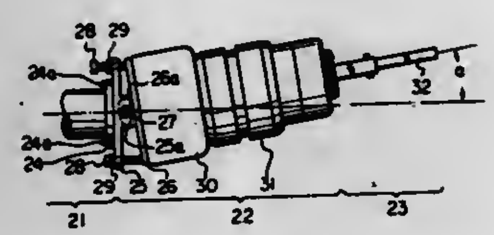

1. An automated device for use in a numerically controlled machine tool system comprising: an arm; a wrist coupled to said arm wherein said wrist is rotatable to a plurality of predetermined angles with respect to said arm; and a hand rotatably coupled to said wrist, wherein said wrist includes a single means for coupling said wrist to said arm and for varying the angle of the axis of said wrist with respect to the axis of said arm, said coupling and varying means comprising a first mounting plate means having a pair of bent portions, a second mounting plate means having a pair of salient portions positioned between said bent portions, and pin means inserted through said bent portions and said salient portions for coupling said first and second mounting plate means and wherein said first mounting plate means and said second mounting plate means are rotatable with respect to each other about the axis of said pin means, and adjusting means contacting said first and second mounting plate means, for adjusting the angle of rotation of said first mounting plate means with respect to said second mounting plate means.

4,299,530
VEHICLE WITH ADJUSTABLE BALANCE WEIGHT
Hans Schaeff, Langenburg, Fed. Rep. of Germany, assignor to Karl Schaeff GmbH & Co., Langenburg, Fed. Rep. of Germany
Filed Dec. 17, 1979, Ser. No. 104,405
Claims priority, application Fed. Rep. of Germany, Dec. 16, 1978, 2854526
Int. Cl.^{3} E02F *9/18*
U.S. Cl. 414—719 **16 Claims**

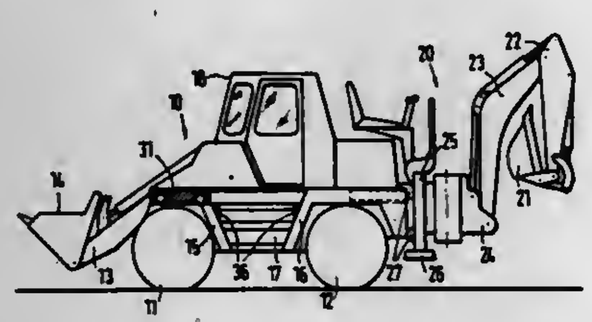

1. A vehicle having means at at least one end thereof for mounting working machinery thereon, said vehicle having at least two axles at least one of which is driven and further including an operator cab, counterweight means on each lateral side of said cab, guide means for said counterweight means extending lengthwise of said vehicle on each lateral side of said cab, said counterweight means being moveable along said guide means from a first position above one of said axles to a second position above the other of said axles, and means for selectively securing said counterweight means in each of said positions.

4,299,531
CARRIAGE FOR SUPPORTING A TUBE BUNDLE ON A TUBE BUNDLE PULLER
James B. Seale, and Henry Gusse, both of Edmonton, Canada, assignors to Edmonton Exchanger and Refinery Services Ltd., Edmonton, Canada
Filed Jan. 14, 1980, Ser. No. 112,015
Claims priority, application Canada, Jun. 22, 1979, 330407
Int. Cl.^{3} B23P *15/26*
U.S. Cl. 414—746 **8 Claims**

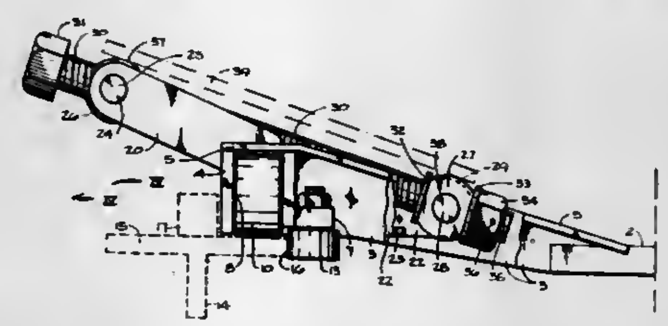

1. A carriage for supporting a tube bundle on a tube bundle puller, comprising:
a frame,
means for permitting said frame to move in a longitudinal direction along a tube bundle puller; and
a pair of support means provided one on each of two sides of the frame, each support means comprising:
a pivot carried by the frame and extending in said longitudinal direction;
an elongate rotatable threaded member and a first support member and a second member thereon;
a first link member extending between and pivotally connected to each of said pivot and said first support member; and
means pivotally coupling said second member to said frame;
at least one of said first support member and said second member engaging said threaded member so that rotation of said threaded member causes movement of said first support member towards or away from said second member with consequent pivotal movement of said first link member relative to said second member about said pivot; and
wherein for each of said support means said second member constitutes a second support member and said means pivotally coupling said second member to said frame comprises a second link member extending between and pivotally connected to each of said pivot and said second support member.

4,299,532
MECHANISM FOR TRANSFERRING OBJECTS FROM ONE POSITION TO ANOTHER
Gerrit Bouwmeester, Almelo, Netherlands, assignor to U.S. Philips Corporation, New York, N.Y.
Filed Jan. 10, 1980, Ser. No. 111,138
Claims priority, application Netherlands, Jan. 12, 1979, 7900243
Int. Cl.^{3} B23Q *7/02*
U.S. Cl. 414—750 **2 Claims**

1. A mechanism for transferring objects, notably samples, from one position to another, characterized in that the mechanism comprises a turntable around which a plurality of positions may be present, a slide being slidably arranged on a guide

on the turntable, said slide comprising a slot which extends transversely of the guide and in which a drive member (pin or roller) is accommodated which is secured to one end of a first arm, the other end of which is pivotably connected to a second arm which is journalled in the turntable by way of a shaft and which is coupled to a drive, a wheel being rigidly arranged

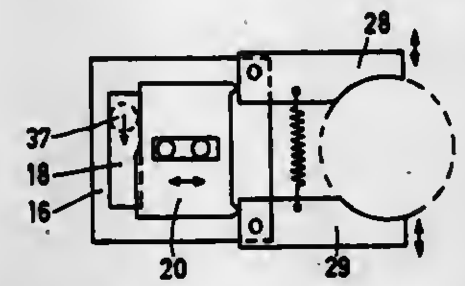

around this shaft, said wheel being coupled to a further wheel whose centre is formed by the pivot of the first and the second arm and which is rigidly connected to the first arm, the arrangement being such that, when the shaft is driven, the drive member follows an elliptical path, the slide accommodating a gripping member for gripping and releasing the objects to be transferred.

4,299,533
JOINTED MANIPULATOR
Makoto Ohnaka, Tsukui, Japan, assignor to Shiroyama Kogyo Kabushiki Kaisha, Kanagawa, Japan
Filed Sep. 20, 1978, Ser. No. 943,966
Claims priority, application Japan, Jun. 6, 1978, 53/68115
Int. Cl.^{3} B65G *47/91*
U.S. Cl. 414—752 **4 Claims**

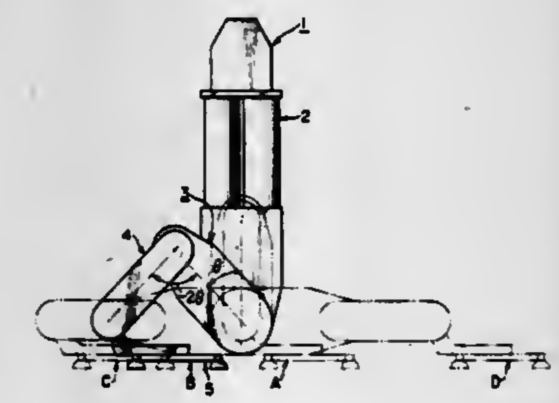

1. A jointed manipulator comprising:
a body;
a first arm of which one end is pivotally mounted around a first axis to the body;
a second arm of which one end is pivotally mounted around a second axis to the other end of the first arm remote from the body;
a holder for holding material to be manipulated, which is pivotally mounted around a third axis to the other end of the second arm remote from the first arm;
a drive means for pivoting the first arm around the first axis with respect to the body;
a coupling means which pivots the second arm around the second axis with respect to the first arm, the amount of said pivoting bearing a fixed proportional relation to the amount of pivoting provided by the drive means of the first arm around the first axis with respect to the body; and
a constraining means which constrains the holder to be in a fixed rotational orientation with respect to the body, as the arms are pivoted, by rotating the holder about the third axis with respect to the second arm,
said first and second arms being approximately the same length and the fixed proportional relation between the amount of pivoting provided by the coupling means of the second arm around the second axis with respect to the first arm, and the amount of the pivoting provided by the drive means of the first arm around the first axis with respect to the body, being approximately 2 to 1,
the coupling means comprising a first sprocket mounted around the first axis and fixed with respect to the body, a second sprocket mounted around the second axis and fixed with respect to the second arm, and an endless chain stretched around the first and second sprockets, said first sprocket being approximately twice the diameter of said second sprocket; and wherein the constraining means comprises a third sprocket mounted around the first axis and fixed with respect to the body, fourth and fifth sprockets mounted around the second axis and fixed with respect to one another, a sixth sprocket mounted around the third axis and fixed with respect to the holder, an endless chain stretched around the third and fourth sprockets and an endless chain stretched around the fifth sprocket, the product of the diameters of the fourth and the sixth sprockets being approximately equal to the product of the diameters of the third and the fifth sprockets, so that the sixth sprocket is approximately fixed in rotational orientation with respect to the body.

4,299,534
GUIDE VANE PROTECTING DEVICE
Yoichi Yamane; Tutomu Kamata; Hiromu Ohonaka, all of Hitachi, and Mitsuo Takase, Mito, all of Japan, assignors to Hitachi, Ltd., Tokyo, Japan
Filed Oct. 19, 1979, Ser. No. 86,338
Claims priority, application Japan, Oct. 20, 1978, 53-128467
Int. Cl.^{3} F03B *3/18;* **F01D** *17/16*
U.S. Cl. 415—9 **4 Claims**

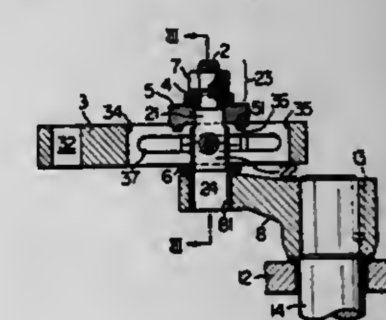

1. A guide vane protecting device having: a first guide vane control member connected at its one end to a gate ring and having an elongated bore extened toward the other end thereof; a coupling pin received by said elongated bore, said coupling pin being connected at its one end to a second guide vane control member for rotating a guide vane and provided at its other end with a spring washer adapted to produce and impart a braking force to said first and second guide vane control members; and a weakened pin fixed to said first control member and adapted to permit, when broken, a movement of said coupling pin along said elongated bore; said first control member being provided at its upper surface with a plurality of recesses each of which having a pair of tapered surfaces, while said coupling pin being provided with protrusions having tapered surfaces opposing to said tapered surfaces of said first control member with a predetermined gap left therebetween; said protecting device characterized by comprising a first and a second braking members by means of which the upper and lower surfaces of said first control members being always subjected to an initial braking force; whereby, when said weakened pin is broken, said first control member and said coupling pin make a relative movement to cause a relative movement between said first control member and said first and second braking members to bring two opposing tapered surfaces into contact with each other to allow said first braking member to slide translationally onto said first control member thereby to uniformly increase the compression load of said spring washer to correspondingly increase the braking force so as to produce a braking force effective to suppress the excessive relative

movement between said first control member and said coupling pin.

4,299,535
FAN INLET GUIDE VANE ASSEMBLY
George T. Brockman; Thomas A. Garavalia, both of Stoddard, and Richard W. Kabat, Genoa, all of Wis., assignors to The Trane Company, La Crosse, Wis.
Filed Nov. 24, 1980, Ser. No. 209,766
Int. Cl.³ F04D *29/46*
U.S. Cl. 415—160 **13 Claims**

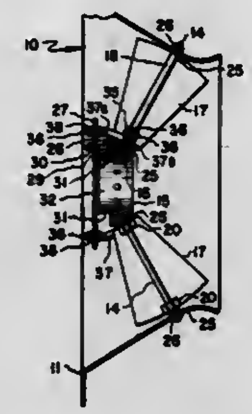

1. A fan inlet assembly comprising
(a) an inlet cone adapted to be disposed at the inlet of a fan for directing airflow therethrough;
(b) a plurality of shafts, each having one end affixed to the inlet cone and generally extending radially inward therefrom toward its center;
(c) a hub disposed generally at the center of the inlet cone and concentric thereto, said hub being affixed to the inwardly extending ends of the shafts;
(d) an adjustable inlet vane rotatably mounted on each shaft between the hub and the inlet cone and having a root end disposed adjacent the hub, each inlet vane having a crank arm attached near its root end;
(e) an annular member disposed within the airflow and movably mounted on said hub for rotation about the hub; and
(f) a link having ball and socket joints disposed at each end thereof, used for movably connecting each of the crank arms to the annular member in a manner such that rotation of the annular member about the hub causes the inlet vanes to rotate simultaneously about their respective supporting shafts, without binding.

4,299,536
MULTI-STAGE PUMPS
Leonard J. Sieghartner, Coal Valley, and Larry Barnhouse, Keithsburg, both of Ill., assignors to Roy E. Roth Company, Rock Island, Ill.
Filed Aug. 9, 1979, Ser. No. 65,126
Int. Cl.³ F04D *29/52*
U.S. Cl. 415—198.2 **22 Claims**

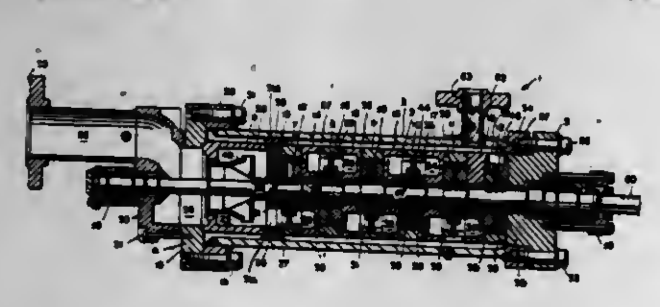

1. A multi-stage pump comprising
a. an elongated inner housing including a low pressure section and high pressure section having a plurality of stages disposed in side by side relation to each other from one end of said housing to the other end thereof; said low pressure section includes a booster stage having low pressure creating characteristics and said high pressure section includes a plurality of stages having high pressure creating characteristics
b. said inner housing having
(1) a fluid inlet at one end thereof adjacent to said low pressure section,
(2) a fluid outlet at the other end thereof,
c. an outer housing having a barrel member disposed around said inner housing in substantially concentric relation thereto, and said outer housing defining, with said inner housing, a closed annular space between said inner and outer housing, and
d. sealing means disposed in sealing engagement with said outer housing and said inner housing, between said low pressure section and said high pressure section adjacent thereto, for sealing off the portion of said annular space disposed radially to said low pressure section from the annular space dispose radially to said high pressure section,
e. discharge outlet means through said outer housing including said annular space disposed radially to said high pressure section, for receiving fluid from said fluid outlet in said inner housing, and for discharging same from said pump.

4,299,537
INTERLINKED VARIABLE-PITCH BLADES FOR WINDMILLS AND TURBINES
Frederick C. Evans, 30 James St., Pittenweem, Fife, Scotland
Filed Jun. 2, 1980, Ser. No. 155,462
Claims priority, application United Kingdom, Jun. 19, 1979, 21252/79
Int. Cl.³ F03D *7/06*
U.S. Cl. 416—119 **9 Claims**

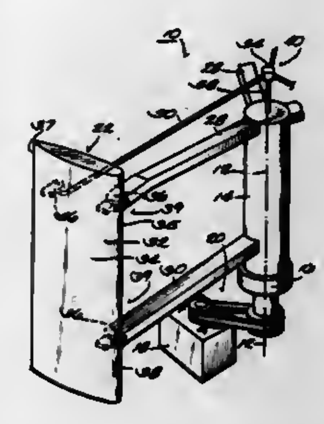

1. A windmill comprising a vertical shaft mounted for rotation about its longitudinal axis, a number of blades each pivotally mounted for angular orientation about a longitudinal axis disposed parallel to the axis of rotation of the vertical shaft, supporting arms extending radially outwardly from the vertical shaft for supporting each blade, and interconnecting link means connecting each of said blades to a junction adjacent said vertical shaft longitudinal axis for controlling the angular orientation of the blades relative to the supporting arms, said interconnecting link means comprising a plurality of elongated rigid non-extensible members each having an inner end and a radially outer end, said inner ends being fixedly joined together at said junction, and said members extending radially outwardly from said junction and having outer ends connected to said blades, and means for resiliently preventing movement of said junction away from said vertical shaft longitudinal axis.

4,299,538
CROSS BEAM ROTOR
Donald L. Ferris, Newtown, and Peter C. Ogle, Woodbridge, both of Conn., assignors to United Technologies Corporation, Hartford, Conn.
Filed Dec. 6, 1978, Ser. No. 966,925
Int. Cl.³ B64C *27/38*
U.S. Cl. 416—134 A **11 Claims**

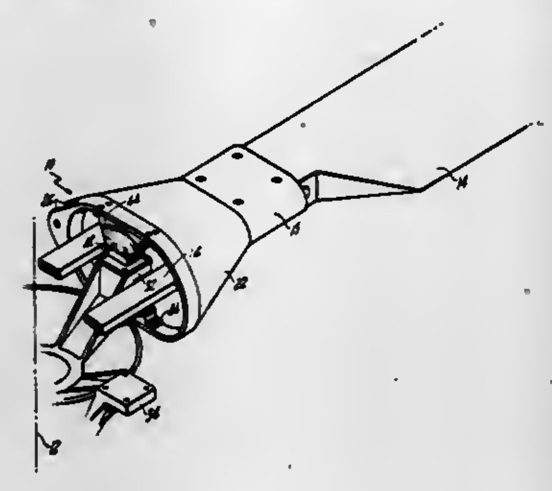

1. A helicopter rotor having one or more pairs of opposed blades, each pair connected by a common spar, said spar being flexible in torsion and bending, a rotor hub, a rigid blade attachment joint formed between said spar and each associated blade, a rigid torque member mounted at said blade attachment joint, said member extending radially inward from said joint, pitch change connecting means provided at the inner ends of said member, each blade supported by a bearing, one race of said bearing attached to said hub and the other race attached to the torque member of said blade, said blade support allowing unrestricted spar torsional and bending freedom between opposite blade attachment joints.

4,299,539
FOUR-BLADE ROTOR, ESPECIALLY FOR HELICOPTERS
Alois Schwarz, Putzbrunn; Karlheinz Mautz, Ottobrunn, and Michael Stephan, Munich, all of Fed. Rep. of Germany, assignors to Messerschmitt-Boelkow-Blohm Gesellschaft mit beschraenkter Haftung, Munich, Fed. Rep. of Germany
Filed Nov. 20, 1978, Ser. No. 962,303
Claims priority, application Fed. Rep. of Germany, Nov. 30, 1977, 2753305
Int. Cl.³ B64C *27/48*
U.S. Cl. 416—138 **10 Claims**

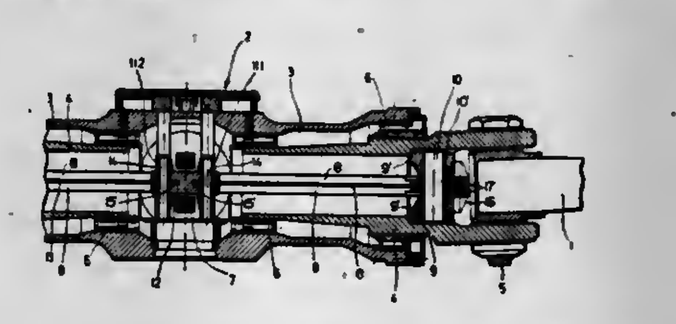

1. A four-blade rotor structure, especially for helicopters, comprising rotor head means (2), four rotor blades arranged in pairs each pair defining a respective longitudinal axis, whereby the blades of a pair are located diametrically opposite each other, each blade having respective blade root means, blade angle bearing means operatively connecting the blade root means to said rotor head means, first vertical and second horizontal tension resistant and torsionally yielding endless coupling loop means operatively interconnecting the blade roots of a respective pair of blades, first stiff loop centering means (11) for said first, vertical endless coupling loop means (7) located in said rotor head means, second stiff loop centering means (12) for said second, horizontal endless coupling loop means (8), said second, stiff loop centering means (12) with said second, horizontal loop means (8) extending through said first, stiff loop centering means (11), said second, stiff loop centering means being further located between said second horizontal loop means (8) in said rotor head means, a first pair of tension strap means (13') operatively interconnecting the respective loop centering means (11) and the radially outer ends of the first, vertical coupling loop means (7), and a second pair of tension strap means (13) operatively interconnecting the second loop centering means (12) and the radially outer ends of the second horizontal coupling loop means (8), said first and second strap means (13', 13) being tension resistant and torsionally yielding, said structure further comprising means (14) operatively interconnecting said first and second loop centering means, said first and second tension strap means extending intermediate the respective loop means and substantially along the respective longitudinal blade axis.

4,299,540
TAIL ROTOR BLADE
Cecil E. Covington, Hurst, and Ronnie L. Martin, Arlington, both of Tex., assignors to Textron Inc., Providence, R.I.
Filed Jan. 2, 1979, Ser. No. 272
Int. Cl.³ B64C *11/20, 11/26*
U.S. Cl. 416—226 **5 Claims**

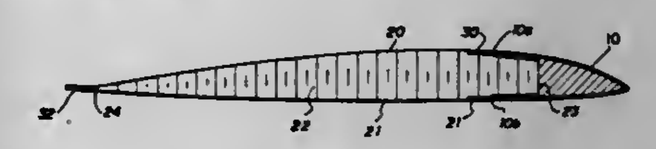

1. A tail rotor blade for a helicopter which comprises:
(a) a metallic nose spar;
(b) a core whose shape defines the trailing portions of the blade;
(c) upper and lower metallic skins which extend within and are adhered to the inner surfaces at the trailing edges of said metallic nose spar and to said core; and
(d) a pair of straps of unidirectional fiberglass strands extending spanwise and adhered to the inner surface of the leading edges of said skins and the outer leading surfaces of said core as to span chordwise the region of the joint between said nose spar and said skins.

4,299,541
INFUSION SOLUTION INJECTING PUMP
Shozo Ohara, and Hisakazu Sunami, both of Tokyo, Japan, assignors to Nikkiso Co., Ltd., Tokyo, Japan
Filed Nov. 28, 1978, Ser. No. 964,299
Claims priority, application Japan, Nov. 29, 1977, 52/142929; Aug. 18, 1978, 53/99964
Int. Cl.³ F04B *49/06*
U.S. Cl. 417—12 **6 Claims**

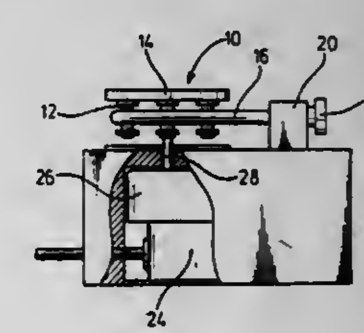

1. An infusion solution injecting pump device comprising pump means, timer control means, step data input means, memory means, volume data input means, and pump control means, said volume data input means supplying solution infu-

sion volume data to said memory means for storage, said memory means including shift registers for storage of said solution infusion volume data and a data latch circuit, said step data input means providing a step data signal of solution infusion pattern to said timer control means as a controlling signal, said timer control means including a timer oscillator for generating a given timer signal, a frequency converter for converting said timer signal into a pulse signal having a frequency proportional to the step data and a frequency demultiplier for demultiplying the frequency of the pulse signal, said memory means transmitting the volume data stored in the memory successively to the data latch circuit under the controlling signal from the timer control signal cooperating with said controlling signal to supply said volume data to said pump control means in the event the injecting volume of said pump changes, said pump control means including a motor and said pump control means converting volume data signal into a motor driving signal, and said timer control means and said pump control means responding to start and stop signals in the device.

4,299,542

FUEL INJECTION PUMPING APPARATUS

James C. Potter, and Stanislaw J. A. Sosnowski, both of London, England, assignors to Lucas Industries Limited, Birmingham, England

Filed Aug. 10, 1979, Ser. No. 65,546

Claims priority, application United Kingdom, Sep. 15, 1978, 36973/78

Int. Cl.³ F04B *49/06, 19/22, 29/00*

U.S. Cl. 417—214 **19 Claims**

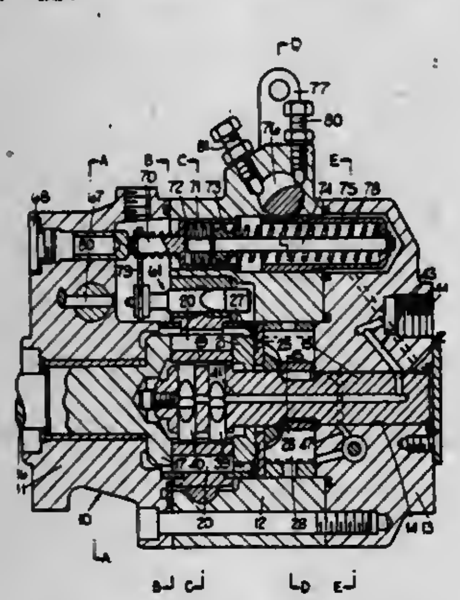

1. A fuel injection pumping apparatus for supplying fuel to a multi-cylinder internal combustion engine comprising a rotary distributor member located within a bore in a housing and arranged in use to be driven in timed relationship with an associated engine, a plurality of outlets formed in the housing and extending to the periphery of the distributor member, said outlets in use being connected to the injection nozzles of the associated engine respectively, a delivery passage formed in the distributor member for registration in turn with said outlets, a plurality of outwardly extending cylinders formed within the distributor member and communicating at their inner ends with said delivery passage, pump plungers in said cylinders respectively, means for imparting inward movement to said plungers in turn as the distributor member rotates so that fuel is supplied to said outlets in turn, further means for supplying fuel to said cylinders, said means for imparting inward movement to said plungers comprising an actuating member for varying the extent of inward movement of the plungers, the actuating member being movable in the housing, said actuating member having a leading flank which extends parallel to a tangent to said bore and which member projects into the path of the outer ends of said plungers or parts engaging therewith, said leading flank effecting inward movement of the plungers in turn as the distributor member rotates, said actuating member being movable along a movement path which extends in a direction parallel to said tangent to said bore so that the extent of inward movement of the plungers by said leading flank varies according to the position of said actuating member along said movement path.

4,299,543

SWASH PLATE COMPRESSOR

Tsunenori Shibuya, Konan, Japan, assignor to Diesel Kiki Company, Ltd., Tokyo, Japan

Filed Jan. 23, 1979, Ser. No. 5,715

Claims priority, application Japan, Jan. 31, 1978, 53-10888[U]

Int. Cl.³ F04B *1/16*

U.S. Cl. 417—269 **1 Claim**

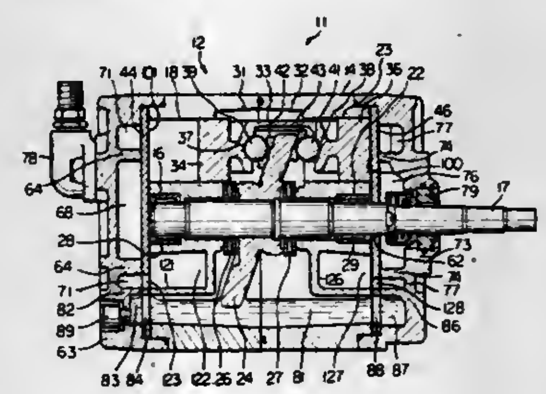

1. A swash plate compressor including a cylinder formed with an axial bore, a piston slidably disposed in the bore, a swash plate supported within the cylinder for reciprocating the piston upon rotation of the swash plate, a lubricant chamber formed in a lower portion of the cylinder, a cylinder head attached to an end of the cylinder, the cylinder head being formed with an outlet chamber, and outlet valve means disposed between the bore and the outlet chamber, characterized by comprising:

partition means sealingly defining a secondary outlet chamber in an upper portion of the lubricant chamber; and

a passageway communicating the secondary outlet chamber with said outlet chamber;

the cylinder head being further formed with an inlet chamber, the compressor further comprising inlet valve means disposed between the bore and the inlet chamber;

the secondary outlet chamber communicating only with said outlet chamber.

4,299,544

ELECTROMAGNETIC PUMPS

Mitusuke Masaka, Kawagoe, Japan, assignor to Jidosha Kiki Co., Ltd., Tokyo, Japan

Filed Jun. 8, 1979, Ser. No. 46,893

Claims priority, application Japan, Jul. 13, 1978, 53-95671[U]

Int. Cl.³ F04B *17/04*

U.S. Cl. 417—417 **7 Claims**

1. In an electromagnetic pump comprising a cylinder, an inlet valve means positioned adjacent one end of said cylinder, an outlet valve means positioned adjacent the other end of said cylinder, a plunger contained in the cylinder to be moveable in the axial direction, an electromagnetic coil disposed about said cylinder, said coil constituting an oscillator assembly together with a transistor, and a housing member including a magnetic yoke member, whereby the plunger is reciprocated by pulsating current supplied to said electromagnetic coil, the improvement which comprises an insulating layer formed on the outer surface of said oscillator assembly, and a foamed member filled

in a space within said housing member, said housing member surrounding said oscillator assembly, said layer and said

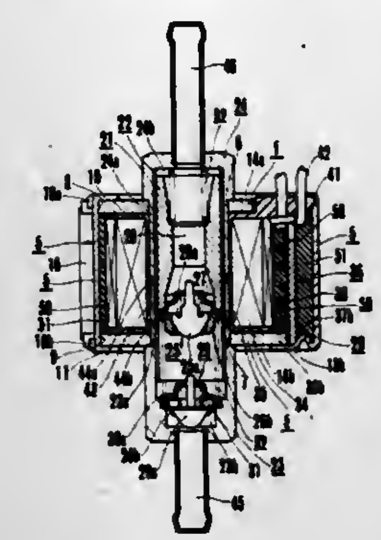

foamed member so that said oscillator assembly is completely isolated from environmental contaminants.

4,299,545

HYDRAULIC OIL WELL PUMPING APPARATUS

Hilton Bever, 119 E. Fifth St., Williamstown, W. Va. 26187

Continuation of Ser. No. 807,685, Jun. 17, 1977, abandoned. This application Jul. 30, 1979, Ser. No. 61,685

Int. Cl.³ F04B *47/04*

U.S. Cl. 417—490 **2 Claims**

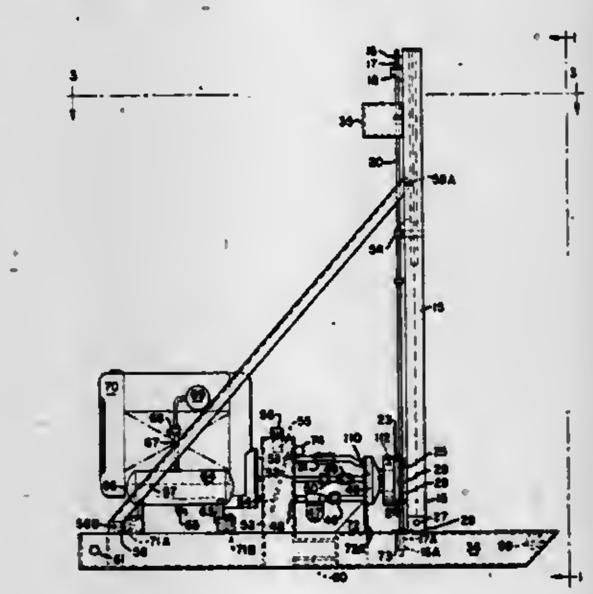

1. A hydraulic pumping apparatus which is adapted for cyclically raising and lowering a polish rod and sucker rod string which extends down into a well which contains a fluid that is to be pumped from the well comprising:

(a) a base;

(b) a pair of vertically aligned hydraulic cylinders which are connected to said base, said cylinders each containing a piston and associated piston rod which moves when said hydraulic cylinder is coupled to a source of pressurized hydraulic fluid;

(c) a horizontal cross beam to which the piston rods of said cylinders are connected;

(d) means for connecting the polish rod to said cross beam so that the cross beam controls the vertical position of the polish rod;

(e) a pair of vertical supports aligned with said hydraulic cylinders, said vertical supports being spaced apart by a distance equal to the length of said cross beam;

(f) a pair of guide means at the ends of the cross beam to guide the cross beam along a selected length of said vertical supports;

(g) a reservoir for hydraulic fluid;

(h) a hydraulic pump having an input and an output the input being coupled to said reservoir;

(i) a first conduit having an input and first and second outputs, said input being coupled to the output of said hydraulic pump, the first output being coupled to a first valve which is coupled to the reservoir, said first valve being adjustable to regulate the amount of hydraulic fluid flowing between the input of said first conduit and the reservoir for controlling the upward speed of motion of the piston;

(j) valve means having an input coupled to the second output of the first conduit and an output coupled to said hydraulic cylinders, said valve means having first and second positions for selectively controlling the flow of hydraulic fluid through the second output of the first conduit and said output of the valve means, said first position of the valve means causing hydraulic fluid to flow from said hydraulic pump through the first output of the first conduit to said reservoir and from the hydraulic pump, through the second output of the first conduit, between the input of and the output of said valve means to the hydraulic cylinders to cause said piston to be moved vertically upward, said second position causing hydraulic fluid to flow from said hydraullic pump to said input of said valve means, through said valve means and a second conduit coupled between said valve means and said reservoir, and causing hydraulic fluid to flow from said hydraulic cylinders to the output of said valve means, through said valve means and a third conduit coupled between said valve means and said reservoir to cause said piston to move vertically downward, said valve means comprising a main valve which controls the flow of hydraulic fluid between the hydraulic pump, the reservoir and the hydraulic cylinders when the valve means is positioned in either the first or second positions;

(k) an adjustable valve disposed within said third conduit for regulating the flow rate of hydraulic fluid from the hydraulic cylinder to said reservoir for adjusting the downward speed of motion of the piston; and

(l) an actuator for positioning of the valve means in either said first or second position, said actuator causing said valve means to be positioned in the second position when the polish rod moves vertically upward to the top of its stroke and causing said valve means to be positioned in the first position when the polish rod moves vertically downward to the bottom of its stroke, said actuator comprising:

(i) a vertically disposed trip rod secured to said base,

(ii) an upper collar secured to said trip rod,

(iii) a lower collar secured to said trip rod,

(iv) a trip actuator plate coupled to said horizontal cross beam and slideably engaging said trip rod,

(v) a top trip lever slideably engaging said trip rod,

(vi) a bottom trip lever slideably engaging said trip rod,

(vii) a centering collar secured to said trip rod which is disposed between said upper and lower trip levers,

(viii) said trip actuator plate engaging said upper collar when said polish rod reaches the top of its stroke to cause said centering collar to engage said top trip lever to cause said main valve to be positioned in its second position,

(ix) said trip actuator plate engaging said lower collar when said polish rod reaches the bottom of its stroke to cause said centering collar to engage said bottom trip lever to cause said main valve to be positioned in its first position, and

the positioning of said main valve in its second position being caused by a control valve which is activated in response to said centering collar engaging said upper trip lever and the positioning of the main valve in said first position being caused by said control valve which is activated in response to said centering collar engaging said lower trip lever; and

(m) a relief valve coupled between the output of the hydraulic pump and the input of the first conduit for regulating

the maximum hydraulic fluid output pressure from said hydraulic pump, said relief valve being coupled to a fourth conduit which is coupled to said reservoir for causing hydraulic fluid to flow directly from said hydraulic pump to said reservoir when the maximum hydraulic fluid output pressure is reached.

4,299,546

VANE CONTROL BEARING ASSEMBLY

Robert L. Stout, 5860 Charlesgate Rd., Dayton, Ohio 45424

Filed Dec. 3, 1979, Ser. No. 99,786
Int. Cl.³ F01C *11/00, 21/00*
U.S. Cl. 418—13 **1 Claim**

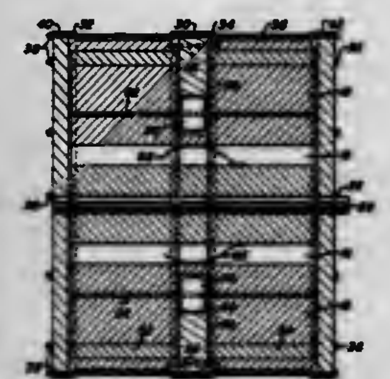

1. A rotary vane gas cycle apparatus comprising: a housing including two axially displaced housing sections; a stator in each of said housing sections and defining a compressor and expander chamber within each of said housing sections; a compressor and expander within each of said housing sections and being driven by a common shaft; said compressor and expander including a rotor assembly within said chambers; said rotor assembly having a plurality of vane members forming a plurality of cells which change in volume as the shaft rotates; said rotor assembly including a plurality of radial slots for slideably receiving the vane members; a radial slot in each of the vane members; a camtrack bearing supported in the slot in each of the vane members; a camtrack member, secured between said housing sections, and being adapted to engage the camtrack bearings, for controlling the movement of the vane members in the rotor slots; spring means, engaging the vane members, for biasing the vane members radially outward in the rotor slots; said housing including compressor and expander inlets and outlets in each of said housing sections.

4,299,547

ROTARY FUEL INJECTION PUMP WITH TWO COMPRESSION OPENINGS

Helmut Simon, Göppingen, Fed. Rep. of Germany, assignor to Robert Bosch GmbH, Stuttgart, Fed. Rep. of Germany

Filed Aug. 6, 1979, Ser. No. 63,598
Claims priority, application Fed. Rep. of Germany, Nov. 11, 1978, 2849012
Int. Cl.³ F04C *2/00, 13/00, 15/02*
U.S. Cl. 418—15 **4 Claims**

1. An injection device for internal combustion engines comprising

a rotary pump for the supply of fuel into an inner chamber of a housing

a grooved rotor disc included in said rotary pump and it having a plurality of vanes coupled in force-locking relation with a drive shaft,

an intake recess on one side of said grooved rotor disc toward a rotary housing wall of said housing,

a compression recess in the rotary pump being provided in a lateral wall in said housing which communicates through openings with the interior thereof, said openings being disposed remotely from each other,

a ring member in said housing having said openings in said ring member, said compression recess communicating with oppositely extending channels,

each of said channels being arranged to discharge into one of said openings, said ring member abutting an annular element provided with openings arranged to communicate with said openings in said ring member,

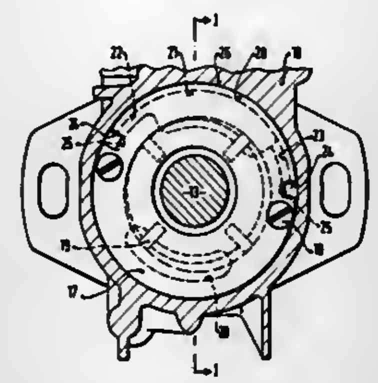

said inner chamber receiving pressure medium guided therein from said two openings being disposed remotely from each other to substantially reduce and eliminate cavitation in the injection pump.

4,299,548

TOY CASTING MACHINE

Gary M. Saffer, Torrance; Hubert A. Rich, Westminster; David N. Carman, Cerritos, and Ferenc Fekete, Huntington Beach, all of Calif., assignors to Mattel, Inc., Hawthorne, Calif.

Filed Dec. 10, 1979, Ser. No. 101,967
Int. Cl.³ B29C *5/00*
U.S. Cl. 425—173 **5 Claims**

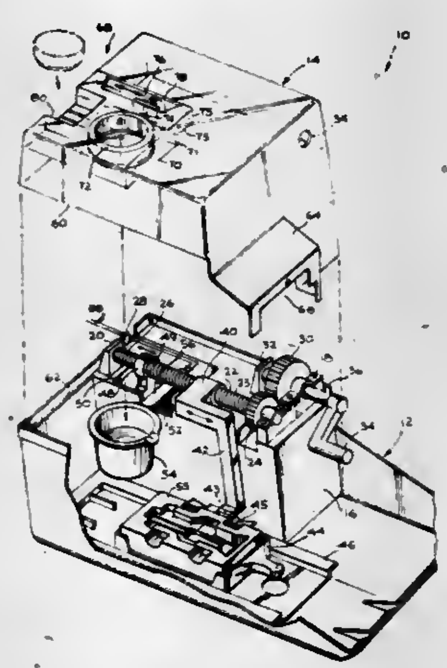

1. A casting machine comprising:

a base;

a crucible rotatably affixed to the base;

a mold carrier slidably mounted to the base;

a means attached to the base, the mold carrier, and the crucible, for moving the mold carrier to a position under the crucible and for rotating the crucible to pour its contents into a mold; and

means attached to the base for covering the crucible and mold carrier to isolate them from an operator while the casting operation is taking place, including a cover for the base having both means for inserting raw materials and means for inserting molds, without exposing an operator to the interior mechanism.

4,299,549

HEATING BLOW-MOLDING MACHINE

Sadao Suzuki, Tokyo; Yoshiyuki Ichizawa, Sohka, and Nobuichi Seki, Tokyo, all of Japan, assignors to Yoshino Kogyosho Co., Ltd., Tokyo, Japan

Filed Dec. 17, 1979, Ser. No. 103,911
Claims priority, application Japan, Dec. 28, 1978, 53/162047
Int. Cl.³ B29C *17/07*
U.S. Cl. 425—214 **7 Claims**

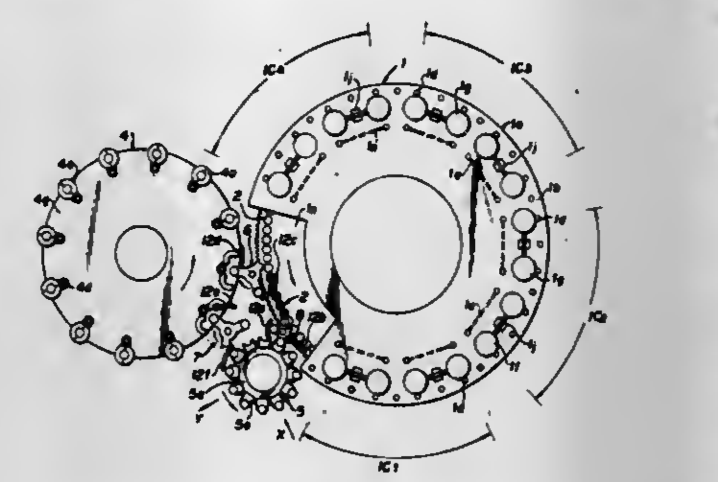

1. A heating blow-molding machine, comprising:

heating means for heating a plurality of injection molded preformed pieces to a temperature for biaxial orientation blow-molding the pieces, comprising:

a first turntable;

a plurality of jig holders having axes equidistantly mounted at the peripheral edge of said first turntable for holding a plurality of jigs, said jig holders being passed through a heating chamber upon rotation of said first turntable and being rotatable about their axes;

a plurality of guide plates located at positions for loading jigs to and unloading jigs from said first turntable, disposed along the rotating path of said first turntable at the jig loading position and disposed partly across the rotating path at the unloading position;

a piece blow-molding means for biaxially orientation blow molding pieces heated by said heating means, comprising:

a second turntable spaced from said first turntable;

a plurality of hinged blowing molds mounted equidistantly on the peripheral edge of said second turntable, capable of closing upon said jigs;

a plurality of guide plates located at positions for loading jigs to an unloading jigs from said second turntable, disposed along the rotating path of said second turntable at the jig loading position and disposed partly across the rotating path at the unloading position;

piece loading and unloading means for sequentially continuously receiving pieces in a neck downward position into said jigs and unloading finished products from said jigs, comprising:

a third turntable spaced from said first and second turntables;

a plurality of jig holders equidistantly located at the peripheral edge of said third turntable;

a plurality of guide plates located at positions for loading jigs to and unloading jigs from said third turntable, disposed along the rotating path of said third turntable at the jig loading position and disposed partly across the rotating path at the unloading position;

first transfer means located between said first and second turntables, comprising;

a first rotor having arms with jig holders at the ends of the arms for transferring jigs from said heating means to said piece blowing means;

a first cam unit driven by a continuous drive source for driving said first rotor to provide intrinsic rotation to said first rotor, converting constant rotating input from said drive source according to a predetermined speed variation curve, such that the rotational speed of said first rotor arms jigholders is substantially equal to the peripheral rotational speed of said first turntable when unloading jigs from said heating means, and such that the rotational speed of said first rotor arms jig holders is substantially equal to the peripheral rotational speed of said second turntable when loading jigs to said piece blow-molding means;

a second transfer means located between said second and third turntables, comprising:

a second rotor having arms with jig holders at the ends of the arms for transferring jigs from said piece blow-molding means to said piece loading-unloading means;

a second cam unit driven by a continuous drive source for driving said second rotor to provide intrinsic rotation to said second rotor, converting constant rotating input from said drive source according to a predetermined speed variation curve, such that the rotational speed of said second rotor arms jig holders is substantially equal to the peripheral rotational speed of said second turntable when unloading jigs from said piece blow-molding means, and such that the rotational speed of said second rotor arms jig holders is substantially equal to the peripheral rotational speed of said third turntable when loading jigs to said piece loading-unloading means;

a third transfer means located between said first and third turntables, comprising:

a third rotor having arms with jig holders at the ends of the arms for transferring jigs from said piece loading-unloading means to said heating means;

a third cam unit driven by a continuous drive source for driving said third rotor to provide intrinsic rotation to said third rotor, converting constant rotating input from said drive source according to a predetermined speed variation curve, such that the rotational speed of the third rotor arms jig holders is substantially equal to the peripheral rotational speed of said third turntable when unloading jigs from said piece loading-unloading means, and such that the rotational speed of said third rotor arms jig holders is substantially equal to the peripheral rotational speed of said first turntable when loading jigs to said heating means;

said heating means further comprising a plurality of heating zones disposed within said heating chamber along the path of said jig holders, each heating zone comprising a plurality of heating rods, a heat exhausting damper and temperature detecting thermostats associated with damper drive means so as to control the temperatures of said heating zones;

said first, second and third turntables being driven by a continuous drive means so as to be continuously rotated at predetermined speeds in a predetermined relationship according to a predetermined speed curve such that each turntable simultaneously loads one jig from and unloads one jig to said first, second or third transfer means.

4,299,550

DEVICE FOR MAKING BATCHES OF DOUGH READY FOR THE OVEN

Jacobus C. van der Togt, Voorburg, Netherlands, assignor to Haagse Bakkerijmachinefabriek Arnold Kalmeijer B.V., The Hague, Netherlands

Filed Dec. 6, 1977, Ser. No. 858,079
Claims priority, application Netherlands, Dec. 16, 1976, 7613994
Int. Cl.³ A21C *3/02*
U.S. Cl. 425—321 **17 Claims**

1. In a device for readying dough for baking having rolling means for rolling risen dough into a slab, folding means for folding said slab of dough and which comprises, in combination:

first and second conveyor sections normally disposed in end-to-end relation;

a further conveyor disposed below the adjacent ends of said conveyor sections;
first drive means for driving said conveyor sections until a slab of dough is partially supported by each section; and
second drive means for reciprocating said conveyor sections in staggered relation whereby to deposit a central portion of the slab onto said further conveyor and thereafter fold the opposite ends of said slab onto such central portion;

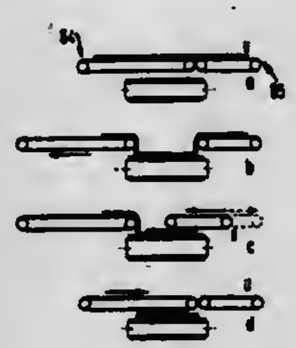

said first drive means including mechanism operative, in the absence of drive input to such first drive means, to feed end portions of the dough slab off of the respective conveyor sections in response to movement thereof by said second drive means but at a rate slower than the movement imparted to the sections by said second drive means.

4,299,551
BELT TENSIONING AND CONTROL FOR DOUBLE BELT PRESSES
Kurt Held, Alte Strasse 1, D-7218 Trossingen 2, Fed. Rep. of Germany
Filed Feb. 12, 1980, Ser. No. 120,878
Claims priority, application Fed. Rep. of Germany, Jan. 27, 1979, 2903180
Int. Cl.³ B29C *15/00*
U.S. Cl. 425—371 **5 Claims**

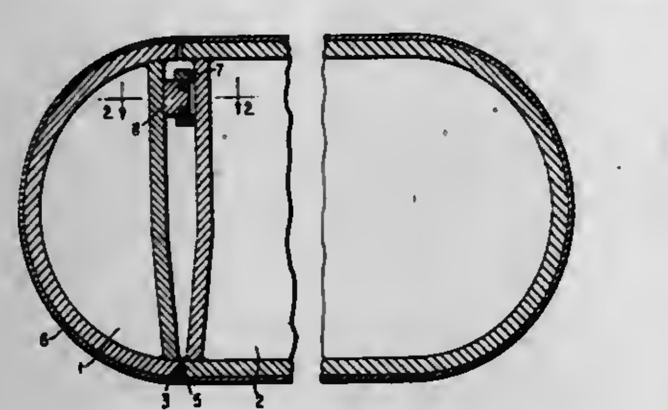

1. In a support element for supporting a rotatable belt in a double belt press, which element includes a central portion presenting a reaction zone in which pressing forces are generated and end portions enclosing the central portion and defining belt return regions for the rotatable belt, the improvement wherein said element comprises: a first part defining said central portion; a second part defining one said end portion coextensive with said first part along a meeting plane and movable relative to said first part; means establishing a pivot connection between said parts along one edge of the meeting plane; and two piston-cylinder units mounted between said parts in the vicinity of the edge of the meeting plane opposite the one plane and spaced apart in a direction parallel to the axis of the pivot connection between said parts, said units being arranged to pivot said parts away from one another under the action of pressure medium in the cylinders of said units and to produce respectively different operating forces.

4,299,552
CLAMP FOR FLAT PLATTEN PRESSES
Augusto Previati, Milan, Italy, assignor to Industrie Pirelli, S.p.A., Milan, Italy
Filed May 13, 1980, Ser. No. 149,411
Claims priority, application Italy, May 22, 1979, 22877 A/79
Int. Cl.³ B30B *5/06*; B29C *3/00*
U.S. Cl. 425—371 **7 Claims**

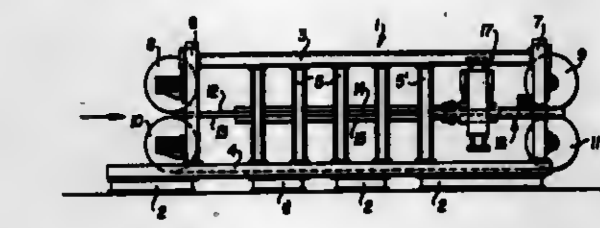

1. A clamp for tensioning or advancing intermittently a ribbon-like element cured within a press, said clamp comprising a frame, movable with respect to a support fixed with respect to the press and lying in the plane of the ribbon-like element, said frame comprising two parallel jaws, placed each on opposite sides with respect to said ribbon-like element and means on the press for pressing said jaws together to grip between them said ribbon-like element, said frame further comprising two sets of single-acting cylinder-piston assemblies housed one in each jaw, for tensioning or advancing said ribbon-like element in the direction of extraction of the cured ribbon-like element from the press, each set of cylinder-piston assemblies being disposed in a single plane symmetrically with respect to the ribbon-like element and two further single-action cylinder-piston assemblies being provided to return the frame near the press.

4,299,553
HOT RUNNER MANIFOLD FLOW DISTRIBUTOR PLUG
Nareshwar Swaroop, Mount Vernon, Ohio, assignor to The Continental Group, Inc., New York, N.Y.
Filed Dec. 14, 1979, Ser. No. 103,780
Int. Cl.³ B29F *1/04*
U.S. Cl. 425—572 **3 Claims**

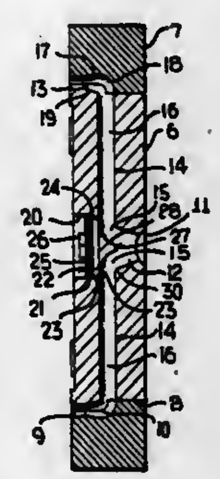

1. A hot runner manifold for coupling a plasticizer to a plural cavity mold, said manifold having defined therein a central primary sprue opening inwardly into said manifold from one face thereof for receiving plastic material from a plasticizer nozzle, a plurality of secondary sprues opening outwardly from said manifold from an opposite face thereof, a runner extending from said primary sprue to each of said secondary sprues, said secondary sprues being arranged on a common circle, said primary sprue being part of a throughbore in said manifold and being defined at said runners by a flow distributor plug seated in said throughbore, said central primary sprue being conical and said throughbore being a conical continuation of said conical primary sprue beyond said runners, and said distributor plug having a frustoconical end portion seated against said conical continuation.

4,299,554
AUTOMATIC VENT DAMPER AND FUEL VALVE CONTROL
Don W. Williams, P.O. Box 185, Van Wert, Ohio 45891, assignor to H & M Distributors, Inc., Fort Wayne, Ind.
Filed Nov. 1, 1979, Ser. No. 90,491
Int. Cl.³ F23N *3/00*
U.S. Cl. 431—16 **12 Claims**

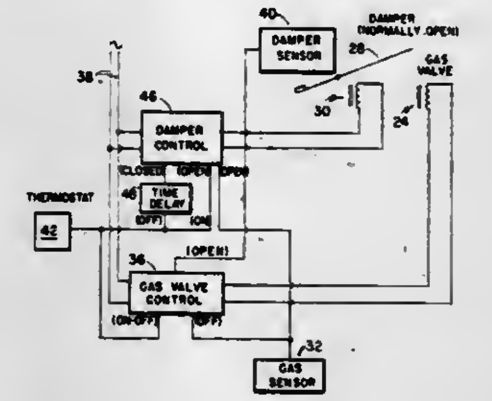

1. In a fluid fuel-fired furnace including a combustion chamber, a draft hood terminating in an exhaust stack, a fluid fuel line terminating in a burner in said combustion chamber, electrically-operated valve means for coupling said fuel line to a source of fluid fuel under pressure, normally-open damper means in said stack for closing the same, electrically-operated means for closing said damper means, means for sensing the temperature in the space being heated by said furnace and having a first condition calling for heat at a selected lower temperature and a second condition calling for termination of heating at a selected higher temperature, a control system for said damper means and valve means comprising: means for sensing the position of said damper means and for respectively providing damper-open and damper-closed signals in response thereto; means for sensing the presence of a hydrocarbon-containing gas in the region of said draft hood and stack and for providing a gas-present signal in response thereto; valve control means adapted to be coupled to said valve means and responsive to both said damper-open signal and to said first condition of said temperature sensing means for energizing said valve means to open the same, said valve control means deenergizing said valve means to close the same in response to any one of said second condition, said gas-present signal and said damper-closed signal; and damper control means adapted to be coupled to said damper closing means and responsive to said second condition for energizing said damper closing means after a predetermined time delay, said damper control means deenergizing said damper closing means in response to any one of said gas-present signal and said first condition of said thermostat means.

4,299,555
CONTROL CIRCUIT FOR COMBUSTION SYSTEMS
Eduard Kamberg, Chicago, Ill., assignor to New Super Laundry Machine Co., Chicago, Ill.
Filed Apr. 30, 1979, Ser. No. 34,241
Int. Cl.³ F23N *3/00*
U.S. Cl. 431—20 **4 Claims**

1. In a combustion control assembly having a burner supplied with combustible gases from a control valve, an ignition system, and an exhaust system therefor comprising:
(a) an electric circuit including a voltage supply source,
(b) a starter switch and thermostat connected in series in said circuit,
(c) a starter means connected in series with said switches and said voltage supply source,
(d) means connected in series with said switches and said starter means and responsive to the operation of the exhaust system for completing the circuit to said starter means,
(e) a blower having a motor in circuit with said starter means and operatively responsive to its energization, and

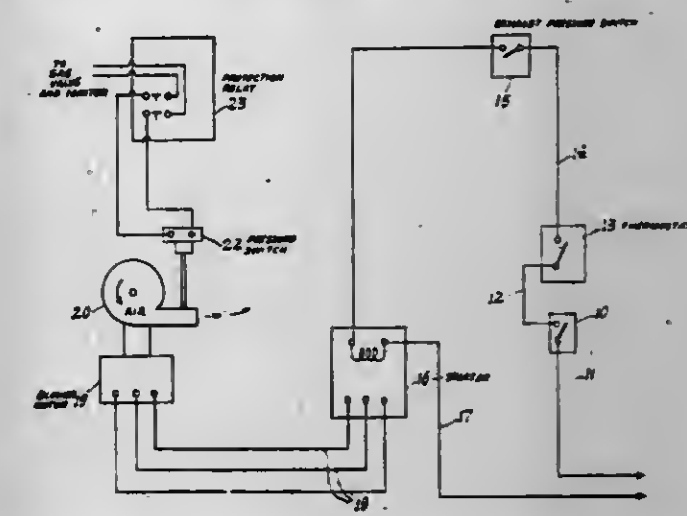

(f) means responsive to the operation of said blower for energizing a protective relay adapted to open the control valve only during the period of energization of said exhaust system and said blower motor.

4,299,556
TIMER CIRCUIT ARRANGEMENT IN DIGITAL COMBUSTION CONTROL SYSTEM
Kenji Todo; Motoshi Miyanaka, both of Yanai, and Toshio Tanaka, Toride, all of Japan, assignors to Hitachi, Ltd., Tokyo, Japan
Filed Aug. 29, 1979, Ser. No. 70,722
Claims priority, application Japan, Sep. 6, 1978, 53/108642
Int. Cl.³ F23N *5/00*
U.S. Cl. 431—29 **22 Claims**

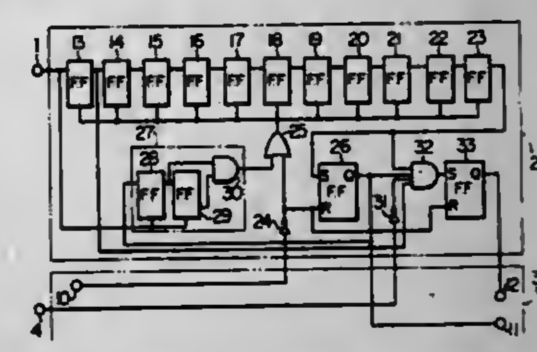

1. A timer circuit arrangement in a digital combustion control system coupled to a clock pulse producing source, wherein counting of a pre-purge time is initiated with an operation starting signal with which the pre-purge operation is started and ignition operation is started with a pre-purge termination signal which is produced at the end of counting of the pre-purge time, and in the event that a flame signal is not produced within a predetermined period of time after the occurrence of the pre-purge termination signal, an ignition-failure signal is produced in response to a predetermined time termination signal produced at the end of the predetermined period of time thereby to stop the ignition operation, and wherein a first flip-flop device is provided for determining the end of said predetermined period of time, said first flip-flop device being composed of at least a part of a second flip-flop circuit device provided for effecting frequency division on clock pulses provided by said clock pulse producing source thereby to determine the end of counting of said pre-purge time, further comprising means for holding an output signal which is provided by said second flip-flop device at the end of counting of said pre-purge time, the output of said holding means being used as said pre-purge termination signal and a logical gate for producing said ignition-failure signal under an AND condition of one of said output from said second flip-flop device and said

predetermined time termination signal, said pre-purge termination signal and said flame signal.

4,299,557
FUEL BURNER CONTROL CIRCUIT
Frans Brouwer, Glencoe, Ill., assignor to Harper-Wyman Company, Hinsdale, Ill.
Filed Oct. 2, 1979, Ser. No. 81,202
Int. Cl.^{3} F23Q *9/12*
U.S. Cl. 431—71 **18 Claims**

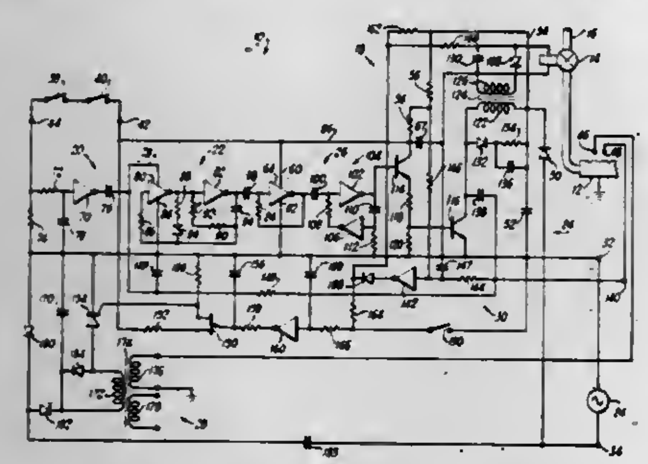

6. A control and spark ignition circuit for use with a fuel burner installation of the type including an electrically operated valve for supplying fuel to the burner, spark ignition electrode means adjacent the burner, and flame probe means adjacent the burner, said circuit comprising:
an igniter circuit connected to the spark electrode means for producing ignition sparks;
a valve operating circuit connected to the valve;
a control signal generating circuit;
an initiation circuit for applying an operating signal of limited duration to said control signal generating circuit for initiating operation of the burner;
first control means connected between said control signal generating circuit and said valve operating circuit to open the valve and admit fuel to the burner in response to a generated control signal;
second control means connected between said valve operating circuit and said ignition circuit for energizing the ignition circuit in response to operation of the valve operating circuit;
a flame detection circuit connected to said flame probe means and coupled to said control signal generating circuit and effective in response to detected burner flame to supply a continuing operating signal to the control signal generating circuit to maintain burner operation beyond said limited duration;
third control means connected between said flame detection circuit and said ignition circuit for disabling the ignition circuit in response to detected burner flame;
and the improvement characterized by:
a pair of power supply terminals for connection to a source of AC line voltage;
said control signal generating circuit including means for generating a control signal having a frequency higher than the AC line frequency;
said valve operating circuit including a controlled conduction device having an input circuit coupled to said first control means for operation of said controlled conduction device at said control signal frequency;
said controlled conduction device having an output circuit coupled to said power supply terminals and including means for developing a driving signal having an amplitude larger than the AC line voltage amplitude;
said flame detection circuit including a capacitor coupled between said flame probe means and said output circuit for developing a predetermined charge level in response to flame rectification of said driving signal;
said capacitor having an impedance at the AC line frequency sufficient to prevent said predetermined capacitor charge level; and
fourth control means coupled between said flame detection circuit and said control signal generating circuit for operating said control signal generating circuit in response to said predetermined generating signal.

4,299,558
SWITCHING DEVICES FOR PHOTOFLASH UNIT
Juliana Pinkasovich, South Euclid, Ohio, assignor to General Electric Company, Schenectady, N.Y.
Filed May 21, 1979, Ser. No. 40,848
Int. Cl.^{3} F21K *5/02*
U.S. Cl. 431—359 **7 Claims**

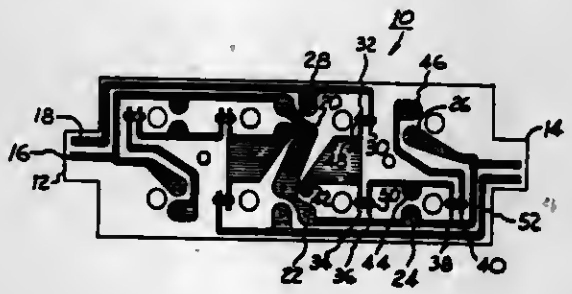

7. In a photoflash lamp unit comprising a pair of flash lamps connected in an electrical circuit to fire individually and in sequence with a solid state radiant energy switch device being located adjacent one of said lamps and disposed to receive radiant energy emitted by that lamp, the improvement wherein said solid state switch more reliably converts from a high electrical resistance condition to a low electrical resistance condition when activated with said radiant energy, said switch device consisting of a carbon containing silver salt admixed with a humidity resistant organic polymer binder in ratios wherein said polymer binder does not exceed more than about 3 percent by weight in said admixture and provides a stoichiometric excess of said silver salt in said admixture.

4,299,559
METHOD AND APPARATUS FOR MELTING GEL-LIKE SUBSTANCES
Masayuki Shimizu, Shizuoka; Keiichi Suzuki, Odawara, and Kazutoshi Inada, Minami-ashigara, all of Japan, assignors to Fuji Photo Film Co., Ltd., Minami-ashigara, Japan
Filed May 13, 1980, Ser. No. 149,591
Claims priority, application Japan, Jun. 1, 1979, 54-68378
Int. Cl.^{3} F27B *14/00, 3/00*
U.S. Cl. 432—13 **5 Claims**

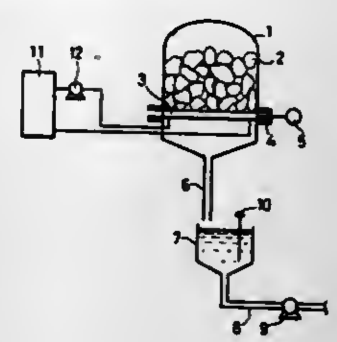

1. A method for melting a gel-like substance comprising the steps of feeding the gel-like substance to rest on top of a heating surface provided at the bottom of the inside of a melting tank, said heating surface having gaps heating said gel-like substance at the heating surface to convert it to a sol which then flows through said gaps to the bottom of the melting tank, and withdrawing the sol from the bottom of the melting tank, rotating said heating surface to provide flowability to a heat transfer boundary film on the side of the gel-like substance.

4,299,560
COMBUSTION CONTROL SYSTEM FOR BURNING INSTALLATION WITH CALCINING BURNER
Norio Nakamura, Omiya; Satoshi Tominaga, Tokyo, and Takashi Kawata, Chiba, all of Japan, assignors to Ishikawajima-Harima Jukogyo Kabushiki Kaisha, Tokyo, Japan
Filed Oct. 15, 1979, Ser. No. 84,887
Claims priority, application Japan, Apr. 24, 1979, 54-50430
Int. Cl.^{3} F27B *1/26, 15/00*
U.S. Cl. 432—36 **9 Claims**

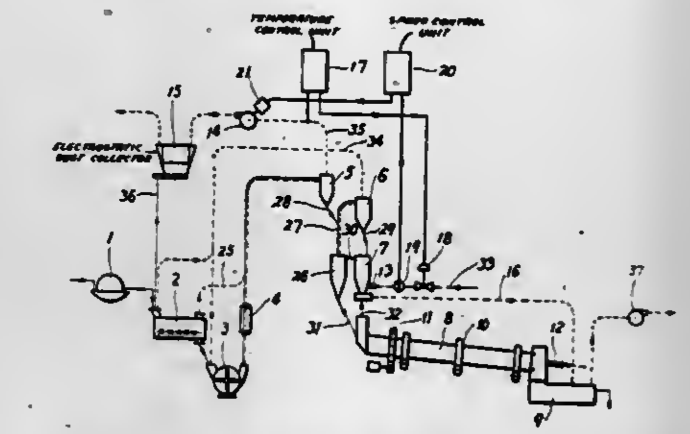

1. In a burning installation including a calcining burner of the type wherein raw material slurries are filtered into cake which in turn is dried by drying means and then pulverized into feed particles which in turn are burned by a kiln with a suspension preheater including at least one cyclone, a motor-operated fan, a calcining burner, and the gases discharged from said suspension preheater being used as a heat source for said drying means, the improvement comprising: a combustion control system having a control means wherein the quantity of fuel charged into a calcining zone is so controlled that the temperature of the exhaust gases discharged from said drying means may be maintained at a predetermined level or in a predetermined range depending upon the water contents in said cake, and said control means controlling the volume of the exhaust gases sucked by said motor-operated fan so as to correspond to the quantity of the fuel charged into said calcining zone, said control means including a temperature control unit for detecting the temperature of the exhaust gases from said cyclone and a flow rate control valve whereby if the detected temperature does not coincide with a predetermined level said temperature control unit transmits a signal to said flow rate control valve in order to change the flow rate of the fuel supplied to the burner so that the temperature of the exhaust gases are maintained at said predetermined level, a speed control unit, a flow meter for measuring the flow of the fuel and for transmitting a signal to said speed control unit for controlling the rotational speed of the motor of said motor-operated fan so that said volume of gases discharged by said motor-operated fan ensures complete combustion of the fuel charged into said burner.

4,299,561
RECOVERY OF HEAT FROM FLUE GAS
Keith J. Stokes, 66 Davis Hill Rd., Weston, Conn. 06883
Filed Mar. 18, 1980, Ser. No. 131,435
Int. Cl.^{3} F27D *17/00*
U.S. Cl. 432—28 **11 Claims**

1. A system for recovering heat from combustion flue gas using combustion-supporting air which comprises
(a) providing a fuel stream and a preheated combustion air stream,
(b) burning said fuel stream with said combustion air stream in a combustion zone, whereby useful heat is produced and a combustion flue gas stream is generated at highly elevated temperature,
(c) providing a first heat sink and a second heat sink, each of said heat sinks constituting a means to alternately absorb heat from a hot gas stream, whereby said hot gas stream is cooled, and desorb heat into a cold gas stream, whereby said cold gas stream is heated,
(d) providing a first reversible fan means associated with said first heat sink, and a second reversible fan means associated with said second heat sink, together with respective means to drive said first fan means and said second fan means,
(e) passing said combustion flue gas stream successively through said first heat sink and said first fan means to atmospheric discharge for a first finite time interval, while concomitantly passing a cold combustion air stream successively through said second fan means and said second heat sink, whereby atmospheric air enters the system through the second fan means functioning in a forced draft (F.D.) mode and then passes through the second heat sink, where the air is warmed, to the combustion zone where the warmed air is burned with the fuel and then flows through the first heat sink in which the gaseous products are cooled and the first

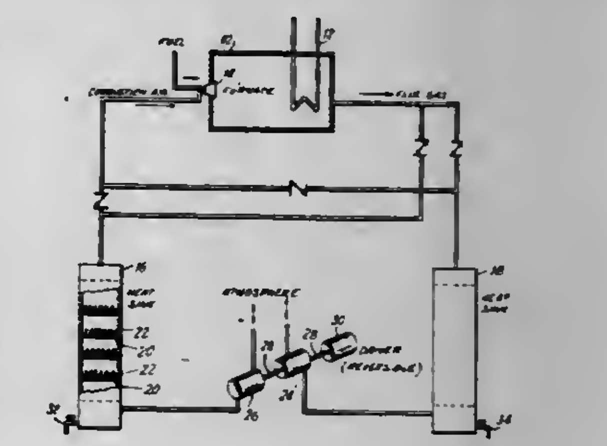

fan means, said first fan means operating in the induced draft (I.D.) mode, to exit to the atmosphere; and
(f) reversing said first and second reversible fan means after said first finite time interval and for a second finite time interval, and passing said combustion flue gas stream to said second heat sink while concomitantly passing the hot gas stream discharged from said first heat sink to said combustion zone during said second time interval, so that during said second time interval atmospheric air enters the system through the first fan means functioning in a forced draft (F.D.) mode and then passes through the first heat sink, where the air is warmed, to the combustion zone where the warmed air is burned with the fuel and then flows through the second heat sink in which the gaseous products are cooled, and the second fan means, said second fan means functioning in the induced draft (I.D.) mode, to exit to the atmosphere, whereby an additional increment of preheated combustion air stream is formed in said first heat sink.

4,299,562
HEATED CHAMBER WALLS
Maurice Harman, Milton Keynes, England, assignor to The Energy Equipment Company Limited, England
Filed May 29, 1979, Ser. No. 43,325
Claims priority, application United Kingdom, May 30, 1978, 24517/78
Int. Cl.^{3} F26B *17/00*
U.S. Cl. 432—58 **3 Claims**

1. A combustor or furnace comprising a chamber having at least one wall bounding at least in part a bed of fluidized material, the wall of said chamber being formed of refractory material in which at least one elongated gap is formed enabling expansion of the wall as the temperature thereof increases, said wall being surrounded by an outer casing, and sparge pipes passing through said outer casing and extending along the

length of and immediately adjacent the associated one of said gaps formed in said refractory lining to inject gas into said gap

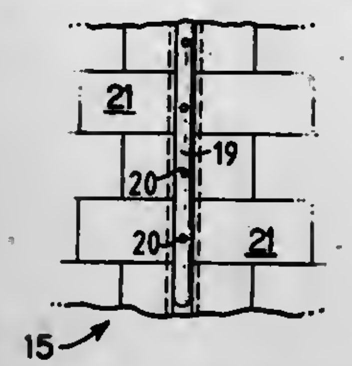

thereby preventing particulate material from packing said gap and from inhibiting expansion of said refractory lining.

4,299,563
CYCLONE PROCESSOR AND SEPARATOR
Robert S. Bryant, II, Buffalo, N.Y., assignor to National Gypsum Company, Dallas, Tex.
Filed Jun. 2, 1980, Ser. No. 155,056
Int. Cl.³ F27B *15/00*; F26B *17/00*
U.S. Cl. 432—58 **9 Claims**

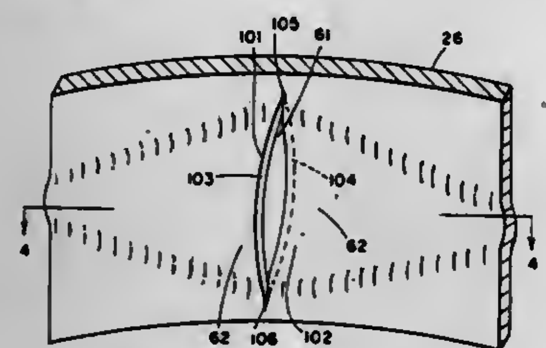

1. Processing apparatus for effecting interaction between, and subsequent separation of, gaseous and solid or liquid particulate substances, comprising an elongated cylindrical vortex chamber and having near one end an inlet duct means substantially tangential to said cylindrical chamber, said cylindrical vortex chamber having a plurality of further inlets for active medium, each said further inlet consisting essentially of a substantially vertically extending slit in the chamber wall and a deformed section of chamber wall on at least one side of said slit, said deformed section of wall forming an opening suitable for passage of said active medium, said deformed section of chamber wall being formed to direct entering active medium tangentially in substantially the same rotary direction as said inlet duct means, said deformed section of chamber wall having substantially the form of a relatively long half-cone with the cone base at said slit, said active medium inlets being distributed in an array along and around said chamber wall, and suitable outlet means for all of said gaseous and solid or liquid substances.

4,299,564
APPARATUS FOR THE THERMAL TREATMENT OF FINE-GRAINED MATERIAL WITH HOT GASES
Horst Herchenbach, Troisdorf; Hubert Ramesohl, and Kunibert Brachthäuser, both of Bergisch-Gladbach, all of Fed. Rep. of Germany, assignors to Klöckner-Humboldt-Deutz AG, Fed. Rep. of Germany
Filed Apr. 3, 1979, Ser. No. 26,610
Claims priority, application Fed. Rep. of Germany, Apr. 10, 1978, 2815461
Int. Cl.³ F27B *7/02, 15/00*
U.S. Cl. 432—106 **2 Claims**

1. An apparatus for the thermal treatment of finely divided material for the production of cement comprising:
a multi-stage suspension gas heat exchanger in which succeeding stages operate at progressively higher temperatures, each stage having an inlet and a material discharge,
a calcination furnace,
solid discharge means connecting the material discharge from the hottest stage of said heat exchanger with said calcination furnace,
first fuel injection means in said discharge means for injecting a relatively quickly oxidizing fuel into the material being discharged from said hottest stage and forming a first burning zone therein,
gas discharge means conveying exhaust gases from said calcination furnace into the inlet of said hottest stage,

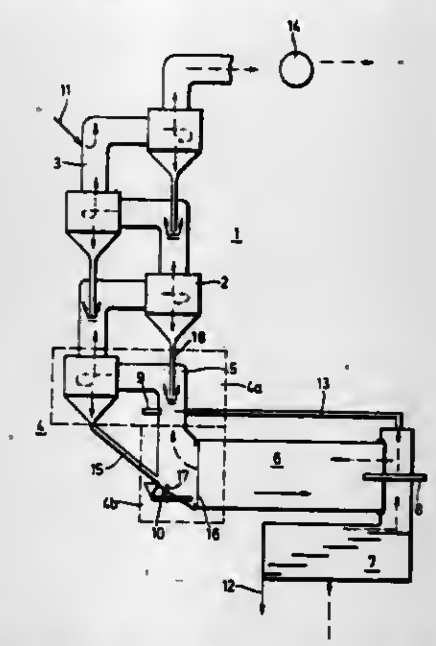

second fuel injection means in said gas discharge means below said first fuel injection means for injecting relatively slowly oxidizing fuel into the material previously treated with the relatively quickly oxidizing fuel, thereby forming a second burning zone therein remote from said first burning zone, and
deflection means in said solid discharge means positioned to divert a portion of the solids passing through said solid discharge means into the exhaust gases passing through said gas discharge means.

4,299,565
HEATING FURNACE
Yoshiaki Shinohara, Kurashiki, Japan, assignor to Kawasaki Steel Corporation, Hyogo, Japan
Division of Ser. No. 22,094, Mar. 20, 1979, Pat. No. 4,266,932, which is a continuation-in-part of Ser. No. 927,850, Jul. 25, 1978, Pat. No. 4,229,163. This application Apr. 29, 1980, Ser. No. 145,001
Int. Cl.³ F27B *7/00*
U.S. Cl. 432—194 **6 Claims**

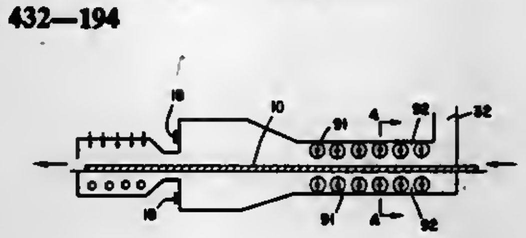

1. A heating furnace for heating bodies by combustion flame comprising:
furnace tail preheating zones;
heating zones;
conveying means which moves said heating bodies longitudinally in the heating furnace;
furnace walls which cover said conveying means with said heating bodies;
burners which are attached to said furnace so as to heat said heating bodies by fuel combustion and which produce a flow of combustion flames in said longitudinal direction; and
heat transfer converters disposed at said furnace tail preheating zones and comprising coil-shaped heat resistant materials disposed in and transverse to the flow of combustion flames of said burners, wherein said heat transfer converters are heated through convection heat transfer from high temperature and high speed flow of the combustion flame to increase the radiation heat transfer to said heating bodies.

4,299,566
METAL PREHEAT CONVEYOR WITH IMPROVED AIR FLOW PROPERTIES
Henry J. Venetta, 9613 Holland Springs Rd., Warren, Ohio 44494
Filed Jan. 17, 1980, Ser. No. 113,111
Int. Cl.³ F27D *3/12*
U.S. Cl. 432—241 **8 Claims**

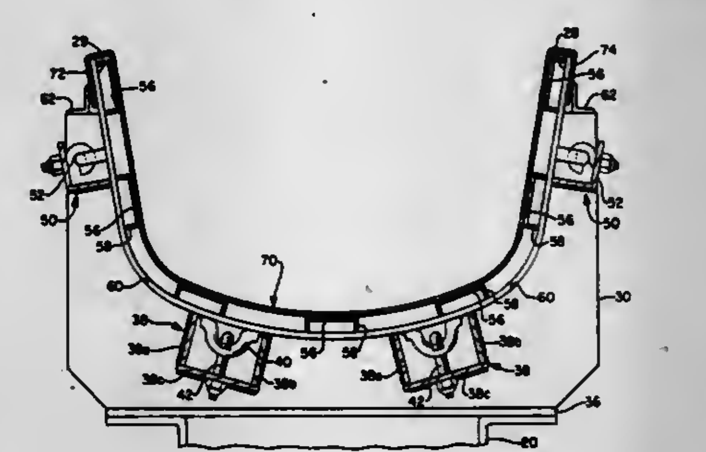

1. In a metal preheat conveyor apparatus or the like comprising
a metal deck plate of generally U-shape in vertical section, and support means for said deck plate and characterized by
an apertured support layer positioned adjacent but spaced from the inside surface of said deck plate, said support layer being movable in relation to said deck plate,
said support means for said deck plate being positioned below said deck plate, and
attaching means operatively attaching only edge portions of said support layer to said support means.

4,299,567
SUPPORT STRUCTURE
Asami Tanaka, 9307 N. Lavergne, Skokie, Ill. 60077
Filed Feb. 1, 1980, Ser. No. 117,543
Int. Cl.³ F27D *5/00*
U.S. Cl. 432—253 **19 Claims**

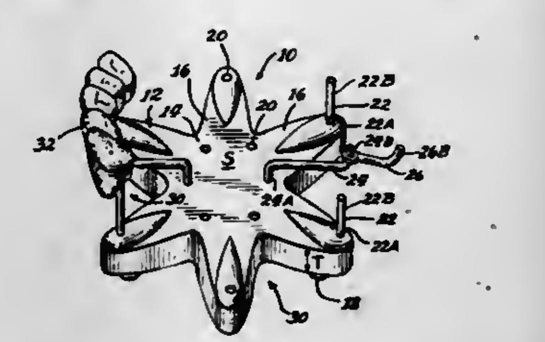

1. A heat resisting structure for supporting an article above a surface while the article is being subjected to a predetermined amount of heat, said structure comprising a base section; a first support means selectively attached to said base and extending generally upwardly therefrom; and a second support means in adjustable complimental engagement with said first support means, said second support means having one portion thereof adapted to supportingly engage the article and a second portion thereof including selective locking means cooperating with said first support means, the relative position of said second support with respect to said first support means being selectively adjustable.

4,299,568
ORTHODONTIC APPLIANCE
John A. Crowley, 4743 Bradley Blvd., Chevy Chase, Md. 20015
Filed Jun. 13, 1980, Ser. No. 159,451
Int. Cl.³ A61C *7/00*
U.S. Cl. 433—6 **18 Claims**

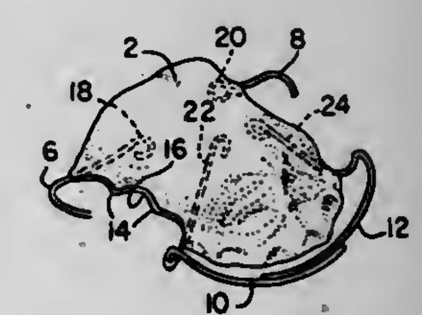

1. An orthodontic appliance for application to the teeth of a patient in whom orthodontic treatment is indicated, said orthodontic appliance comprising:
(a) support means molded to conform to the contours of the periodontal mouth structures adjacent the lingual side of the teeth and to fit securely against the gingival edges of the lingual surface of the teeth for mounting positioning wires and clasps;
(b) a pair of dual function positioning and retaining means for contacting the labial surfaces of the teeth and moving the teeth to a desired orientation or maintaining teeth in a previously achieved desired orientation, each one of said pair of dual function positioning and retaining means having a secured end and a free, unsecured end, the free end of one of said positioning and retaining means being adapted to extend across the anterior teeth from the cuspid on one side of the mouth to at least the opposite maxillary lateral incisor, and the free end of the other of said positioning and retaining means being adapted to extend across the anterior teeth from the opposite cuspid to at least the opposite maxillary lateral incisor; and
(c) anchor means connected to said support means for securing said orthodontic appliance to the posterior teeth.

4,299,569
ORTHODONTIC BRACKET FOR STRAIGHTENING TEETH
Leonard Frantz, 12860 Biscayne Blvd., North Miami, Fla. 33161
Continuation-in-part of Ser. No. 665,163, Mar. 8, 1976, abandoned. This application Nov. 2, 1976, Ser. No. 738,098
Int. Cl.³ A61C *7/00*
U.S. Cl. 433—8 **20 Claims**

8. An orthodontic bracket assembly comprising: a hard, non-elastomeric, non-metallic bracket having an opening therein for receiving an arch wire, or the like; and a rigid, substantially non-flexible liner on at least a portion of the surface of said non-metallic bracket defining said opening for

protecting said non-metallic bracket from damage due to forces applied by an arch wire, or the like, received therein,

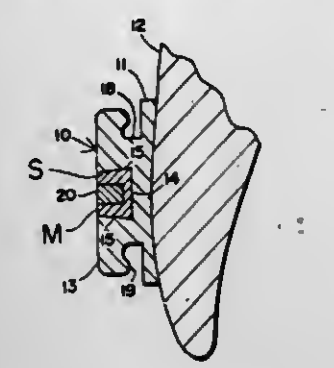

said liner being fabricated of a material harder than the material of said bracket.

4,299,570
OCCLUDATOR
Fumio Yogosawa, Tokyo, Japan, assignor to Sankin Kogyo Kabushiki Kaisha, Osaka, Japan
Filed Apr. 8, 1980, Ser. No. 138,365
Claims priority, application Japan, May 11, 1979, 54-57839
Int. Cl.[3] A61C *11/00*
U.S. Cl. 433—62 **3 Claims**

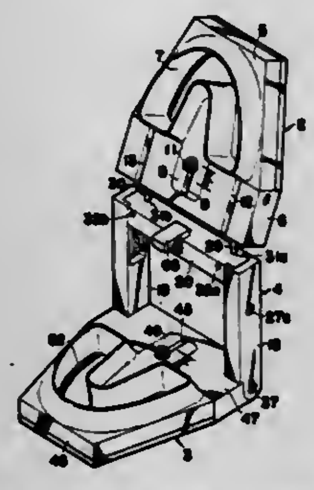

1. An occlusion device for use in examination of occlusion of artificial dentures comprising:
a first holder having a substantially U-shaped groove for securing therein a first of two artificial dentures,
a second holder having a substantially U-shaped groove for securing therein a second of the two artificial dentures,
a supporting device having two parallel legs and a beam member, said beam member being connected at corresponding end portions of said legs,
means for pivotally connecting said supporting device to said first holder, and
means for pivotally connecting said supporting device to said second holder, said first holder having a denture holding plate and a base plate detachably connected to said denture holding plate, said denture holding plate having said U-shaped groove, said base plate having two parallel grooves on one surface thereof, said beam member of the supporting device having two rods projecting outwardly and having a substantially spherical member at a projected end of each of said rods, said spherical members being nested in predetermined positions within said parallel grooves such that said first holder is pivotally engaged with said rods, said second holder having a denture holding plate and a base detachably connected to said denture holding plate of the second holder.

4,299,571
DENTAL FILE
John T. McSpadden, Johnson City, Tenn., assignor to Inventive Technology International, Inc., Johson City, Tenn.
Filed Aug. 3, 1979, Ser. No. 63,436
Int. Cl.[3] A61C *5/02*
U.S. Cl. 433—102 **4 Claims**

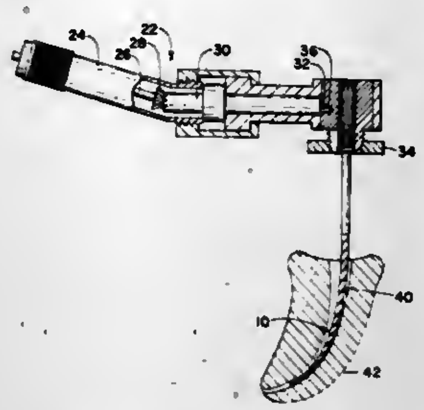

1. A root canal file comprising an elongated body having a shank portion and a working portion, cutting shoulder means on said working portion circumscribing said body in a continuous manner and numbering from about 0.1 to about 5.0 per millimeter of body length, and a smooth pilot end of from greater than about 1.0 millimeters to about 3.0 millimeters in length extending from said working portion.

4,299,572
DENTAL SAW BLADE
David D. McKinney, 110 Spring Forest Rd., Greenville, S.C. 29615
Filed Nov. 1, 1979, Ser. No. 90,093
Int. Cl.[3] A61C *3/02*
U.S. Cl. 433—144 **3 Claims**

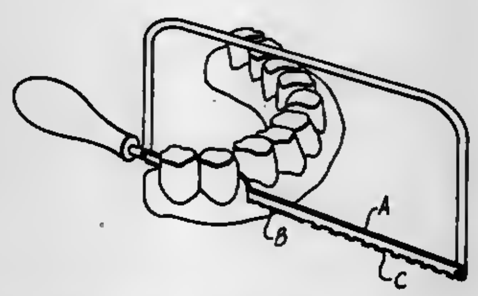

1. A dental saw blade for sawing dental stone work comprising:
a longitudinal shank portion extending the length of said blade;
a first section having a number of saw teeth carried by said shank portion in generally linear alignment one behind the other;
a second section of saw teeth carried by said shank portion in a laterally offset manner;
said second section having a number of saw teeth in which next adjacent teeth are offset with respect to one another in opposite lateral directions relative to the linear alignment of said first section of saw teeth;
said first and second sections joining one another enabling said second section of teeth to enter said cut following initiation by said first cut affording a faster and more accurate sawing of said stone work; and
an intermediate section of teeth joining said first and second section wherein said teeth are offset gradually relative to said second section of teeth and blend said first and second sections of saw teeth;
whereby said second section of teeth may be moved into a cut initiated by said first section of teeth with reduced likelihood of chipping or alteration of said dental stone material.

4,299,573
MANUFACTURE OF DENTURES
Mario Ricci, Fossano, Italy, assignor to Major Prodotti Dentari S.p.A., Mocalieri, Italy
Filed Feb. 28, 1980, Ser. No. 125,320
Int. Cl.[3] A61C *13/00*
U.S. Cl. 433—167 **7 Claims**

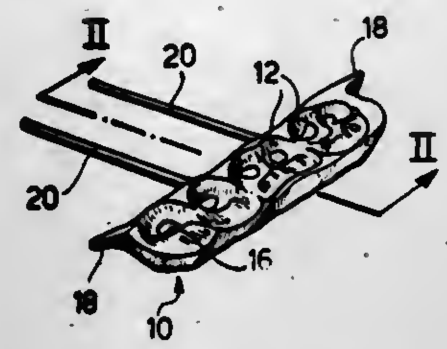

1. A device for facilitating the positioning and mounting of rear teeth on dentures, comprising an elongate plate, respective faces of said plate defining impressions of occlusal parts of upper and lower said teeth respectively, said faces further having, within said impressions, holes corresponding to the positions of cusps of at least said upper teeth, whereby said impressions position said teeth correctly during mounting on respective said dentures.

4,299,574
FABRICATION OF DENTAL RESTORATIONS
Tommy R. Neihart, 707 N. Wayne St., Apt. 101, Arlington, Va. 22201
Filed Apr. 16, 1979, Ser. No. 30,381
Int. Cl.[3] A61C *11/00*
U.S. Cl. 433—213 **14 Claims**

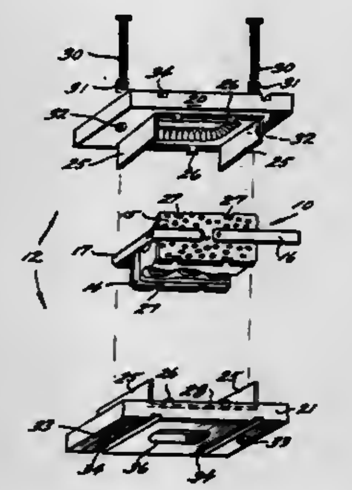

1. An assembly for fabricating dental restorations, comprising
a dental tray including a pair of spaced side walls; means for releasably maintaining the walls in spaced position; and a deformable divider contained by the side walls, said tray adapted to contain dental impression material therein; and
die cavity forming means including a pair of base members having continuous peripheral portions defining a cavity therein; means for mating with said dental tray side walls and base members to define operable die cavities for receipt of a solidifiable plastic mass therein; and means providing for injection of solidifiable plastic material into the die cavities formed by said dental tray, mating means, and base members; said mating means comprising a pair of upstanding walls formed on each base member on opposite sides of the cavity formed therein and positioned to extend between said dental tray side walls; interlocking surface manifestations formed on said base members and said dental tray side walls; and means for maintaining said base members, dental tray, and base member upstanding walls positively assembled together to form operable die cavities, said maintaining means comprising a plurality of spring-loaded bolts operatively engaging both said base members.

4,299,575
RUNNING LIGHTS SIMULATOR
William W. Carrow, Springfield, and Joseph R. Moulton, Fredericksburg, both of Va., assignors to The United States of America as represented by the Secretary of the Army, Washington, D.C.
Filed Jun. 9, 1980, Ser. No. 157,575
Int. Cl.[3] F41F *3/26;* **B60Q** *1/26*
U.S. Cl. 434—11 **11 Claims**

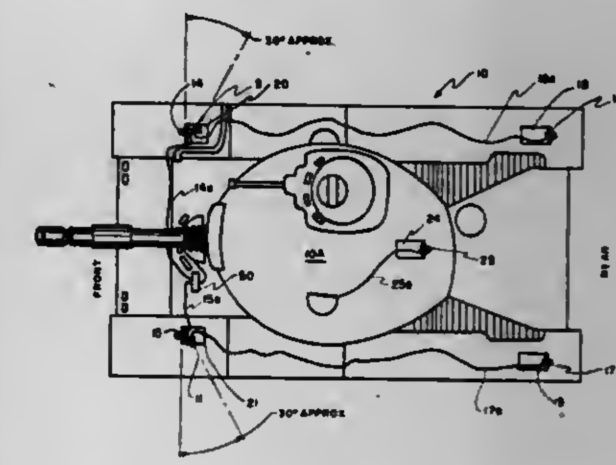

1. An enemy armor vehicle running lights simulator for training troops to identify enemy vehicles in nighttime operation by providing simulated lighting signature patterns of enemy vehicle running lights, said simulator comprising:
an array of instrument panel simulator lamps which represent enemy armor vehicle simulated running lights mounted at appropriate locations on a simulated enemy vehicle wherein the positions of said instrument panel simulator lamps are comprised of front right and front left lamp assemblies each having forward lamps and sideward lamps thereon and rear right and rear left lamp assemblies and a rear turret lamp assembly each having rearward lamps thereon wherein all forward lamps are green and all sideward lamps are amber and all rearward lamps are red; and
a power distribution system comprised of input power to two organic dimmer/map light assemblies each having an organic dimmer control with an input side having said input power applied thereto and with an output side having electrical wiring connected through various jacks and plugs and junction boxes to the map light portion of each of said two organic dimmer/map light assemblies and to designated lamp assemblies for simultaneously connecting said input power to said designated lamp assemblies of said array of instrument panel simulator lamps and to said map light wherein the brightness of said designated lamp assemblies is estimated by the brightness of said map light on the organic dimmer/map light assembly being controlled by said organic dimmer control.

4,299,576
HELMET COUPLED ACCELERATION SIMULATOR
Gerald J. Kron, Binghamton, N.Y., assignor to The Singer Company, Binghamton, N.Y.
Filed Apr. 27, 1979, Ser. No. 34,064
Int. Cl.[3] G09B *9/00*
U.S. Cl. 434—59 **9 Claims**

1. Apparatus for providing forces to an operator of a vehicle simulator simulative of the acceleration forces the operator would experience in an actual vehicle, comprising:
(a) a helmet wearable by the operator;

(b) force means for providing simulated acceleration forces to said helmet; and
(c) capture means for automatically and inconspicuously fastening said force means to said helmet after the operator has positioned himself in the vehicle simulator said helmet being adapted to receive said force means.

8. A method of providing forces to an operator of a vehicle simulator simulative of the acceleration forces the operator would experience in an actual vehicle, comprising the steps of:

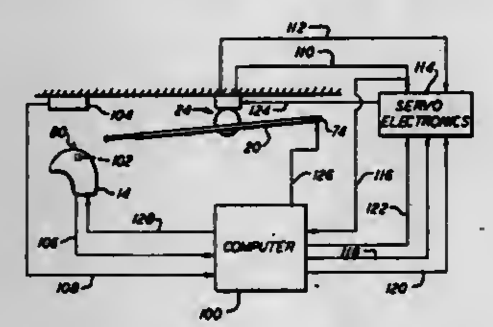

(a) providing a helmet wearable by the operator;
(b) providing force means for providing simulated forces to said helmet said helmet being adapted to receive said force means;
(c) automatically and inconspicuously fastening said force means and said helmet after the operator has positioned himself in the vehicle simulator; and then
(d) providing said simulated acceleration forces to said helmet by way of said force means.

4,299,577
LINGUISTICALLY CODED ALPHABET CHARACTERS
Milisande L. Marryman, 285 W. Skyline Dr., La Habra, Calif. 90631
Filed Nov. 16, 1979, Ser. No. 95,505
Int. Cl.³ G09B *17/00*
U.S. Cl. 434—170 **9 Claims**

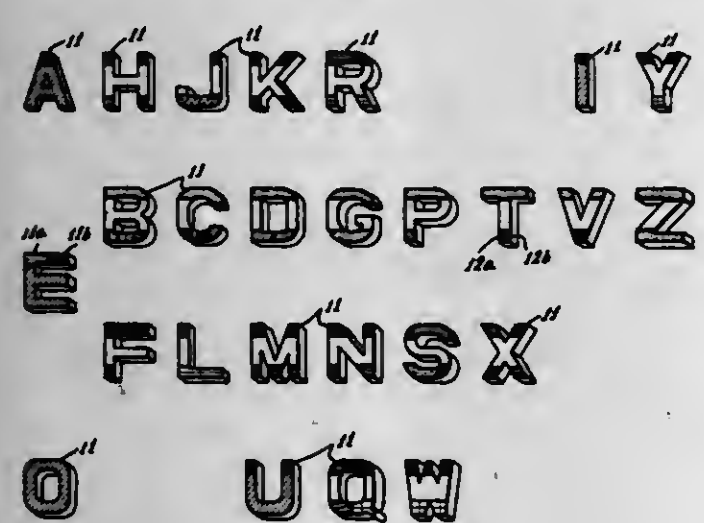

1. An educational device comprising of:
a plurality of items, each of which has a character of the alphabet legible thereon;
each of said characters represents a respective consonant letter and a respective vowel letter;
each of said letters has an upper portion, a middle portion, and a lower portion;
each of said consonant letters is painted over the middle portion thereof in a first color to indicate said letter is a consonant;
each of said vowel letters is painted over at least the middle portion thereof in a second color to indicate said letter is a vowel;
coding means in the form of different colors painted on said upper portions and said lower portions of some of said letters to aid in the pronunciation thereof.

4,299,578
CROSSWORD SYSTEM AND GAME APPARATUS
Paul L. Wayman, Suite 304, 610 Poydras St., New Orleans, La. 70130
Division of Ser. No. 870,872, Jan. 20, 1978, Pat. No. 4,205,852. This application Jun. 3, 1980, Ser. No. 156,062
Int. Cl.³ G09B *19/00*
U.S. Cl. 434—177 **1 Claim**

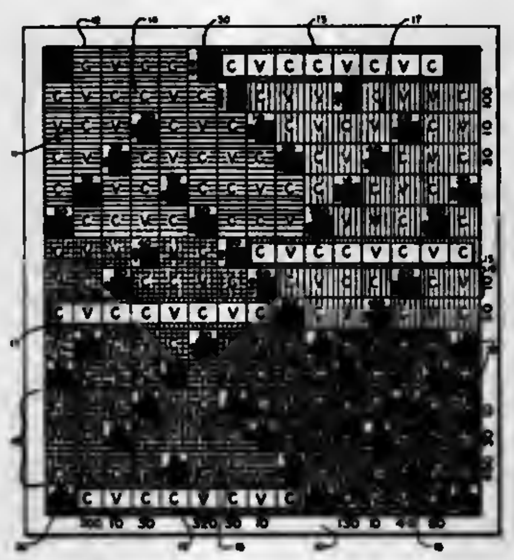

1. A method of developing a crossword puzzle comprising the steps of:
(a) obtaining a crossword puzzle grid defining sections;
(b) writing in selected transsectional words into the grid;
(c) making "possibility" checks from a provided table indicating average preference values based on statistical data;
(d) forming a hypbos of the grid by assigning "C" (consonant) and "V" (vowel) locations based on highest frequency rate with the longest words done first and with "possibility" checks done as needed and writing the assigned "V"s and "C"s into the spaces in the hyphos corresponding to the letter spaces on the grid;
(e) determining the relative priorities of the crossword puzzle grid sections with respect to difficulty as determined by statistical tables; and
(f) filling in the blanks of the grid with words with the use of provided "Paralog" type lists starting with the most difficult and in accordance with the relative priorities of the grid sections as determined in step "e".

4,299,579
DEEP FAT FRYER FIRE FIGHTING SIMULATOR AND METHOD
Edmund Swiatosz, Maitland, and Bruce V. Lane, Palm Bay, both of Fla., assignors to The United States of America as represented by the Secretary of the Navy, Washington, D.C.
Filed Oct. 22, 1979, Ser. No. 86,978
Int. Cl.³ G09B *9/00*
U.S. Cl. 434—226 **13 Claims**

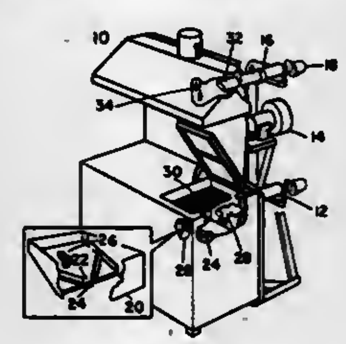

13. Apparatus imitating the appearance of a deep fat fryer, for providing training in techniques to effectively combat cooking oil fires, comprising:
fire-resistant structure having a simulated cooking vat with movable lid, and a lid switch which provides an output representative of the position of said lid with respect to its covering relationship as a closure to said vat;
burner means for providing controlled flame in said vat;
signalling means within said vat for providing an output in response to the proper application, as determined by preselected criteria, of preselected fire extinguishing agent(s);
valving means responsive to said lid switch and said signalling means for disabling said burner means when said output from said lid switch, and said output from said signalling means, are representative that said agent(s) have been applied properly, and that said lid has been placed in a closure position to said vat within a predetermined period of time of the last proper application of said agent(s).

4,299,580
EDUCATIONAL OBJECT IDENTIFICATION GAME
Johnell Fields, and Jessie Holten, both of P.O. Box 5002, Oakland, Calif. 94605
Filed May 16, 1980, Ser. No. 150,614
Int. Cl.³ G09B *7/00*
U.S. Cl. 434—335 **5 Claims**

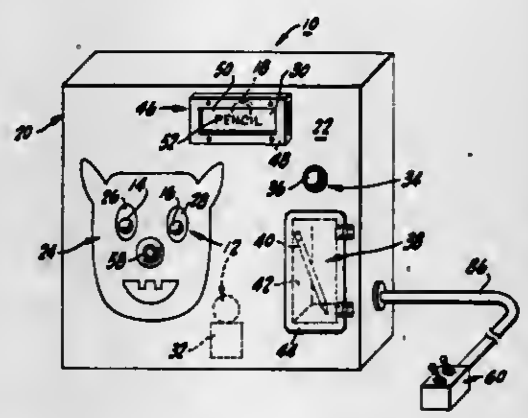

1. A game mechanism comprising:
a. first electrically operated alarm means for producing a first signal;
b. second electrically operated alarm means for producing a second signal;
c. means for containing an object;
d. means for displaying a symbolic equivalent of the object in the vicinity of said means for containing an object;
e. first switch means for activating said first alarm means, said first switch means being electrically connected to said first alarm means;
f. second switch means for activating said second alarm means; said second switch means being electrically connected to said second alarm means;
g. third switch means for selectively activating said first and second switch means, said third switch means being electrically connected to said first and second switch means, said third switch means being operable in cooperation with said means for containing an object and said means for displaying a symbolic equivalent of the object;
h. source of electrical power forming an electrical circuit with said first and second alarm means, and said first, second, and third switch means.

4,299,581
STEPLESS TRANSMISSION DEVICE FOR A BICYCLE
Akira Korosue, Nishinomiya, Japan, assignor to Nankai Tekko Co., Ltd., Osaka, Japan
Filed Sep. 21, 1979, Ser. No. 77,778
Claims priority, application Japan, Sep. 24, 1978, 53-117735
Int. Cl.³ F16H *11/06, 29/06*
U.S. Cl. 474—69 **4 Claims**

1. A transmission device for a bicycle which can steplessly change the rotational ratio of a wheel to a drive sprocket by changing the oscillation angle of rachet arms which are radially disposed on the periphery of a disk fixed to a hub shaft for said sprocket, each rachet arm being mounted on one end of a crank shaft with a crank arm mounted at the other end of each said crank shaft, characterized in that said rachet arms incorporated with said respective crank arms are pivotally attached to

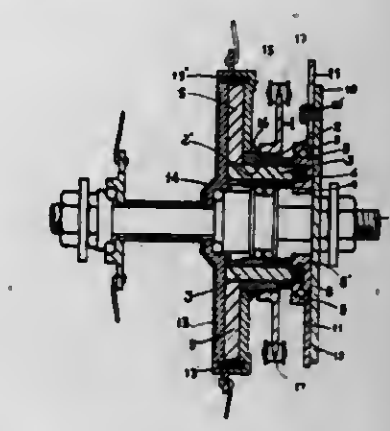

said sprocket in positions equally distributed on a coaxial circle, and one end of each crank arm supports a guide pin, said guide pin being engaged in an annular groove which is coaxially provided in a rotatable bearing race the eccentricity of which can be changed.

4,299,582
CHAIN DRIVE FOR MOTORCYCLE REAR WHEELS CARRIED BY SWING ARMS
Horst Leitner, Dr.-Th.-Körner-Strasse 33, Bruck, Mur, (Steiermark), Austria
Filed Mar. 2, 1979, Ser. No. 17,014
Claims priority, application Austria, Mar. 7, 1978, 1629/78
Int. Cl.³ F16H *7/18*
U.S. Cl. 474—109 **11 Claims**

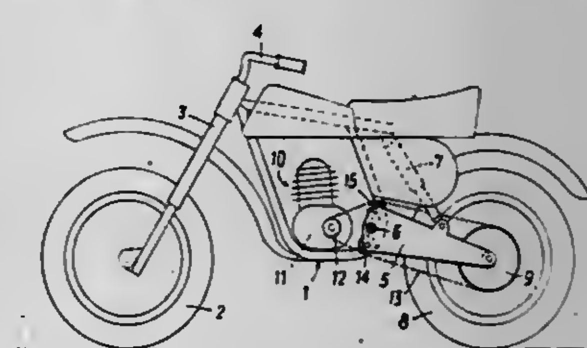

1. A chain drive for motorcycle rear wheels carried by swing arms mounted on a frame by a swing arm bearing, comprising
a swing arm is pivotally mounted on the swing arm bearing on the frame,
a rear wheel chain sprocket is disposed on said swing arm,
two chain-deflecting means at least in part are rigidly secured to said swing arm and are spaced apart substantially directly above and below the swing arm bearing respectively on both sides thereof,
a drive chain having upper and lower courses trained around both of said chain-deflection means at contact points therewith,
said chain-deflecting means are aligned relative to said swing arm bearing such that an imaginary line between said contact points of said upper and lower courses of said drive chain with said two chain-deflecting means respectively substantially passes through said swing arm bearing.

4,299,583
HYDRAULIC BELT TENSIONER CONSTRUCTION
Derald H. Kraft, Canton, and Daniel M. Rinaldo, Akron, both of Ohio, assignors to Dyneer Corporation, Canton, Ohio
Filed Oct. 31, 1979, Ser. No. 90,002
Int. Cl.^{3} F16H *7/12*
U.S. Cl. 474—110 **19 Claims**

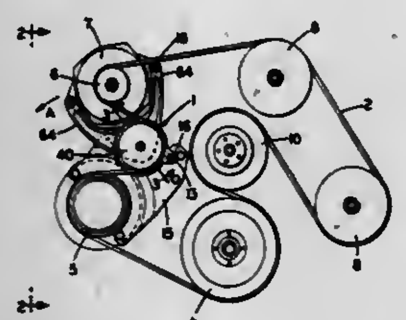

1. A belt tensioner construction for automatically tensioning an endless belt of a drive system for vehicle accessories, said tensioner construction including:
(a) a housing;
(b) shaft means movably mounted within the housing, said shaft means having a lever portion extending outwardly from said housing adapted to operatively engage the endless drive belt and apply a tensioning force on said belt when the lever portion is moved in a belt-tensioning direction;
(c) elastomer means mounted within the housing and engageable with the shaft means biasing the lever portion of the shaft means in a belt tensioning direction;
(d) expandable bladder means mounted within the housing and engageable with the shaft means;
(e) a fluid supply communicating with the bladder means; and
(f) pump means for supplying fluid to the bladder means under pressure to expand said bladder means into engagement with the shaft means to move the shaft means and the lever portion of the shaft means in the belt tensioning direction.

4,299,584
BELT TENSIONER CONSTRUCTION
Nolte V. Sproul, Canton, Ohio, assignor to Dyneer Corporation, Canton, Ohio
Filed Dec. 28, 1979, Ser. No. 108,136
Int. Cl.^{3} F16H *7/12*
U.S. Cl. 474—135 **12 Claims**

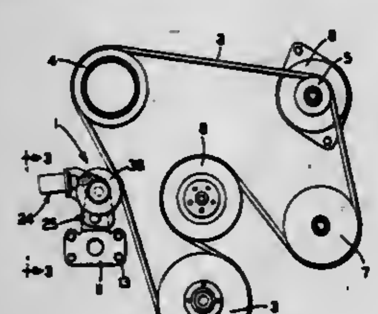

1. A belt tensioner construction for tensioning an endless drive belt of a drive system for vehicle accessories, said tensioner construction including:
(a) bracket means adapted to be mounted on a vehicle engine adjacent the drive belt;
(b) spring means mounted on the bracket means;
(c) lever means pivotally mounted on the bracket means and biased by the spring means in a belt tensioning direction;
(d) rotatable pulley means mounted on the lever means and movable into tensioning engagement with the drive belt upon pivotal movement of the lever means by the spring means;
(e) damping means operatively engageable with the bracket means and lever means to retard oscillatory movement of the lever means, said damping means including a strip of spring steel having one end attached to the bracket means and a second end engageable with the lever means; and
(f) engagement means provided at the junction of the second end of the strip of spring steel and the lever means to retard pivotal movement of the lever means in a direction opposite to the belt tensioning direction.

4,299,585
CHAIN GUIDE AND MOUNTING MEANS
Tony Nagin, Jr., and Tony Nagin, Sr., both of 14016 S. Indiana Ave., Riverdale, Ill. 60627
Division of Ser. No. 553,618, Feb. 27, 1975, Pat. No. 4,018,299, which is a continuation of Ser. No. 330,616, Feb. 8, 1973, Pat. No. 3,874,718. This application Mar. 16, 1977, Ser. No. 778,176
Int. Cl.^{3} F16H *7/18*
U.S. Cl. 474—140 **4 Claims**

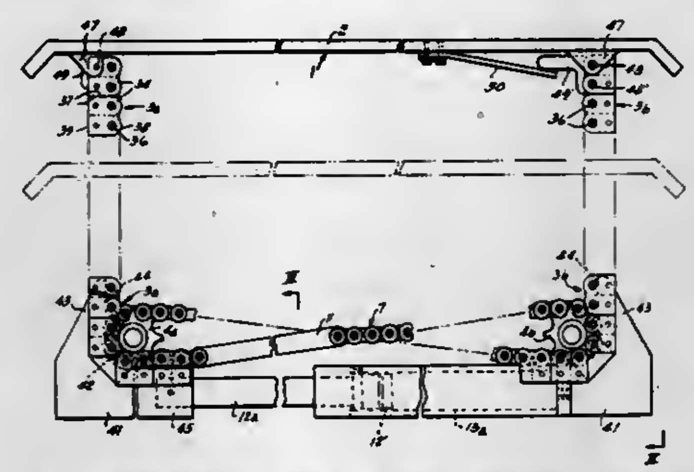

3. In a chain guiding structure, the combination of a chain constructed to transmit both tension and compression loads, said chain comprising at least two spaced sets of side plates, between which sprocket-engaging rollers extend, said rollers being supported on respective pins extending between cooperable sets of side plates adapted to longitudinally abut, operative to render the chain, when extended in a straight line, rigid under compression forces in such line, sprocket means over which a portion of said chain extends in concentric relation therewith with teeth of the sprocket means engaging rollers of said concentric portion of the chain, and guide means intersecting the plane of rotation of the teeth of such sprocket means and having a guide surface concentric with said sprocket teeth and disposed to engage rollers of said concentric portion of the chain with which said sprocket teeth are meshed, whereby said guide means restricts radial disengaging movement of the concentric portions of said chain engaged with the sprocket, and directs compression loads on the chain in a direction transverse to the original direction thereof, mounting means adapted to be rigidly secured to the structure to which the chain is to be attached, a member rigidly secured to at least two roller links of said chain, means pivotally connecting said member to said mounting means, and resilient means for urging said member in a pivotal direction operative to exert forces on said chain opposing buckling forces thereon.

4,299,586
COMPOSITE DRIVING BELT AND TRANSVERSE ELEMENT FOR SAME
Frederik E. C. Van der Hardt Aberson, Eindhoven, Netherlands, assignor to Van Doorne's Transmissie B.V., Tilburg, Netherlands
Filed Feb. 6, 1980, Ser. No. 119,177
Claims priority, application Netherlands, Feb. 6, 1979, 7900923
Int. Cl.^{3} F16G *1/00, 5/00*
U.S. Cl. 474—201 **6 Claims**

1. In a driving belt for use with V-shaped pulleys, including an endless flexible carrier and a plurality of transverse elements abutting against each other in face-to-face contact and assembled on the carrier, said transverse elements being provided with coupling means comprising at least one projection at one

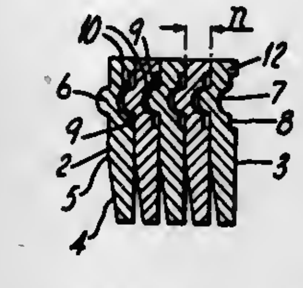

face and at least one substantially corresponding coupling recess at the other face, the improvement wherein the thickness of the transverse elements at the location of the coupling means is smaller than the distance between the abutting faces of successive transverse elements.

4,299,587
V-BELT
Junji Imamura, Kobe, Japan, assignor to Mitsuboshi Belting Ltd., Kobe, Japan
Filed Jan. 14, 1979, Ser. No. 48,404
Claims priority, application Japan, Feb. 8, 1979, 54-15626[U]
Int. Cl.^{3} F16G *5/08*
U.S. Cl. 474—262 **9 Claims**

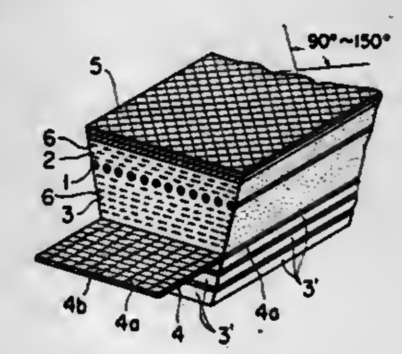

1. A raw edge type rubber V-belt comprising; a tension section, a compression section, a tensile member layer extending in the longitudinal direction of said belt and embedded between said tension section and said compression section, said tensile member layer positioned away from the V-belt central neutral axis thereby defining an unsymmetrical construction, at least one ply of rubbered fabric highly stretchable in the longitudinal direction of said belt having in lamination form a rubber layer and a twill weave fabric with crimped nylon wefts subjected to wooly treatment, short fibers mixed in a compression rubber layer under said tensile member layer and, a tension rubber layer over said tensile member layer having short fibers mixed therein extending in the lateral direction of said belt.

4,299,588
ENDLESS POWER TRANSMISSION BELT
Paul M. Standley, Springfield, Mo., assignor to Dayco Corporation, Dayton, Ohio
Filed Dec. 17, 1979, Ser. No. 104,616
Int. Cl.^{3} F16G *5/08, 5/24*
U.S. Cl. 474—264 **10 Claims**

1. A raw edge, endless power transmission belt having a tension section, a compression section and a load-carrying section therebetween, said belt comprising a plurality of layers, wherein at least one of said layers is a fabric layer, at least one other of said layers is composed primarily of elastomeric material and at least one further of said layers is an elastomeric material having a heat-conducting amount of a pyrolytic graphite dispersed uniformly therethrough wherein said pyrolytic graphite is oriented in said further layer in a direction

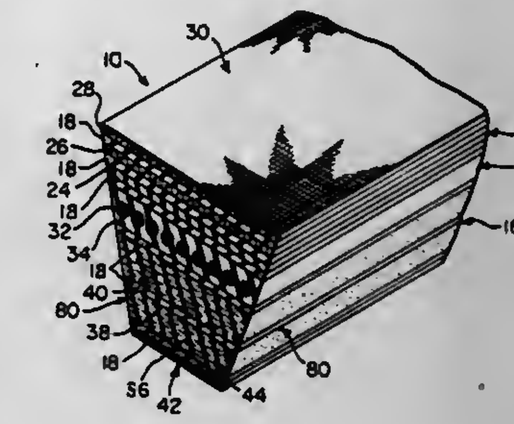

approximately transverse to the longitudinal axis of said belt to thereby conduct heat to the side edges of the belt.

4,299,589
CLOSURE ASSEMBLY POSITIONING APPARATUS
Douglas G. Nelson, Franklin, Ohio, and Donald F. Freund, Macon, Ga., assignors to The Mead Corporation, Dayton, Ohio
Filed Mar. 20, 1980, Ser. No. 132,064
Int. Cl.^{3} B31B *17/02*
U.S. Cl. 493—109 **4 Claims**

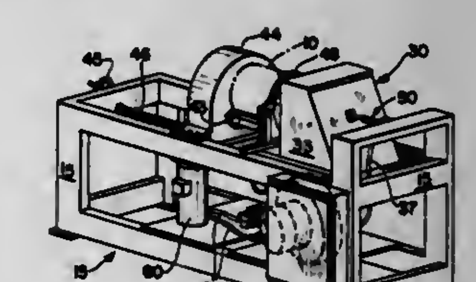

1. Apparatus for the positioning of a chime ring member of a drum closure assembly into an interference, fitted relationship with a drum comprising:
(a) a support frame;
(b) A sliding head assembly mounted on said support frame, said sliding head assembly including chime ring retaining means and pressure expansion means for applying pressure to the inside of said drum to promote the concentric expansion of said drum wherein said means comprise a supply of pressurized air applied through an aperture located in said raised disc portion of said sliding head assembly, said aperture being positioned such that the air flowing through said aperture is directed into the open end of said drum;
(c) a drum support assembly mounted on said support frame, said drum support assembly including:
(i) first drum retention means for preventing movement of said drum during positioning of said chime ring member, and
(ii) second drum retention means for guiding the concentric expansion of the top portion of said drum;
(d) means for actuating movement of said sliding head assembly; and
(e) a source of power for supplying energy to said sliding head assembly.

4,299,590
CARTONING MACHINE
Mikio Sasaki, Nanatsuka, Japan, assignor to Shibuya Kogyo Company, Ltd., Kanazawa, Japan
Filed Nov. 27, 1979, Ser. No. 97,628
Claims priority, application Japan, May 25, 1979, 54-64694
Int. Cl.³ B31B *3/02*
U.S. Cl. 493—164 **8 Claims**

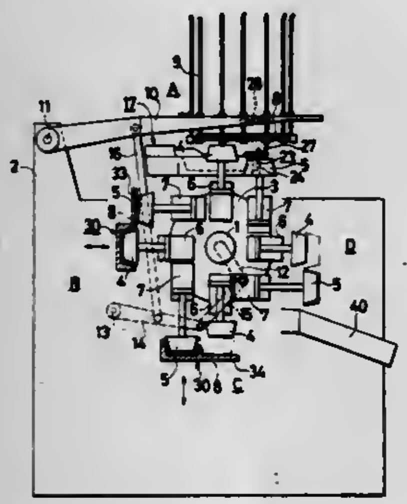

1. A cartoning machine for forming a carton having a box body and a box lid which are connected together, from a carton blank having a box body portion and a box lid portion which are connected together, said cartoning machine comprising:

a rotatably supported body which is indexible to a plurality of predetermined, angularly spaced positions;

a plurality of pairs of positive dies which are supported on said body at angularly spaced locations, each said positive die being reciprocably movable in a direction extending outwardly from said body, one positive die of each of said pairs corresponding to the box body portion of the carton blank and the other positive die of each of said pairs corresponding to the box lid portion of the carton blank;

selectively actuable suction means in each said positive die for drawing the corresponding portion of the carton blank against said positive die and supporting the carton blank thereon;

a plurality of spaced working stations adjacent said body, including a carton blank supply station, a box body folding station, a box lid folding station and an ejecting station, said working stations being disposed around said body at said angularly spaced positions so that said pairs of positive dies are successively positioned at said stations when said body is indexed; and

first and second box folding devices which are respectively disposed at said box body folding station and said box lid folding station, said first and second box folding devices being relatively movable toward and away from a pair of said positive dies located at said box body folding station and said box lid folding station, respectively, for folding carton blanks into cartons when said devices approach said positive dies; and means for controlling operation of said suction means and said reciprocal movement of said pairs of positive dies so that the operations performed at each of said stations take place while said body is stationary.

4,299,591
TEXTILE PRINTING PROCESS
Razmic S. Gregorian, Aiken, and Chettoor G. Namboodri, North Augusta, both of S.C., assignors to United Merchants and Manufacturers, Inc., New York, N.Y.
Filed Sep. 19, 1978, Ser. No. 943,831
Int. Cl.³ D06P *5/02, 3/52, 3/24*
U.S. Cl. 8—477 **10 Claims**

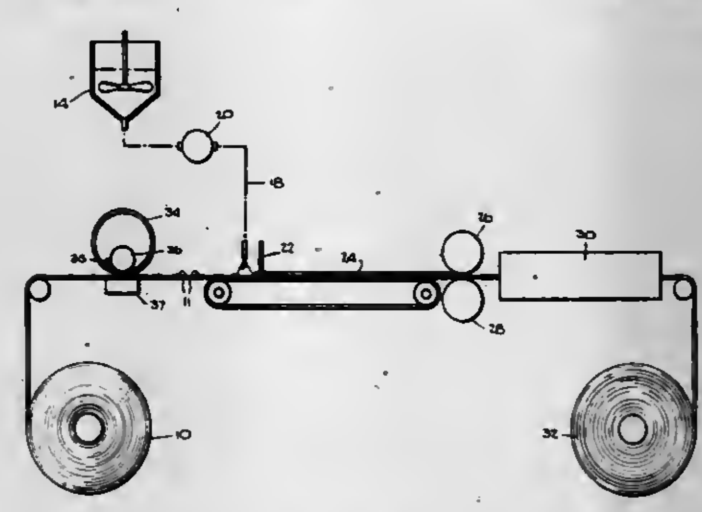

1. A method of printing patterns on selected portions of textile materials comprising the steps of:

(a) applying a color-containing printing composition to a selected portion of a textile material in accordance with a pre-selected pattern;

(b) thereafter uniformly coating said textile material to which said printing composition has been applied with a foamed composition to form a blanket over said previously applied printing composition prior to fixation thereof, said blanket of foam being of a sufficient thickness and coated over said color-containing printing composition so as to facilitate substantially uniform penetration of said printing composition into said textile material upon collapsing of said foam composition;

(c) collapsing said foamed composition to result in substantially uniform penetration of said printing composition into said textile material in accordance with said pre-selected pattern; and

(d) thereafter fixing the color on said printed textile material.

4,299,592
PRINTING OF TEXTILE MATERIALS
Toni Simenc, Mannheim, and Harro Petersen, Frankenthal, both of Fed. Rep. of Germany, assignors to BASF Aktiengesellschaft, Ludwigshafen, Fed. Rep. of Germany
Filed Dec. 18, 1979, Ser. No. 104,867
Claims priority, application Fed. Rep. of Germany, Jan. 18, 1979, 2901823
Int. Cl.³ D06P *1/58, 3/85*
U.S. Cl. 8—496 **8 Claims**

1. A process for printing textile materials consisting of cellulose fibers or mixtures thereof with synthetic fibers, comprising:

formulating a print paste consisting essentially of a synthetic thickening agent which is a homopolymer or copolymer of an ethylenically unsaturated carboxylic acid of 3 to 5 carbon atoms, a disperse dye, a fixing agent and auxiliaries, said formulation containing from 40 to 250 parts by weight of a fixing agent selected from the group consisting of N-methylol compounds of urea and urea derivatives, N-methylol ether compounds of urea and urea derivatives, and N-methylol and N-methylol ether compounds of carbamic acid esters per 1000 parts by weight of said print paste;

applying said print paste to said textiles; and fixing said dye at an elevated temperature.

4,299,593
METHOD AND APPARATUS FOR DETECTING AND MEASURING A GAS
Robert B. Dopp, Madison, Wis., assignor to The Upjohn Company, Kalamazoo, Mich.
Filed Apr. 20, 1979, Ser. No. 31,990
Int. Cl.³ G01N *21/78*
U.S. Cl. 23—232 R **1 Claim**

1. In a method for measuring the amount of hydrogen cyanide in a gas stream by utilizing a hydrogen cyanide absorbing reagent liquid, which upon exposure to and absorption of hydrogen cyanide, undergoes a color change upon passage of the exposed reagent liquid through a heater for subsequent analysis of the reagent liquid in a color detector, the improvement comprising the steps of:

passing the stream of gas in counter flow relationship with a flow of hydrogen cyanide absorbing reagent liquid for exposure to and absorption by the latter of hydrogen cyanide while feeding the reagent liquid under gravity in a well defined stream;

controlling the flow rate of said exposed reagent liquid at a point subsequent to its exposure to hydrogen cyanide and prior to the entry of the reagent to the heater with a predetermined head of the reagent liquid above said heater by optically sensing the reagent liquid at a predetermined level above said heater; and

varying the flow of said reagent liquid at a place above said heater to maintain a meniscus of the reagent liquid at said predetermined level thereby establishing through said heater a substantially constant flow rate for a consistent measurement of the color of said exposed reagent liquid.

4,299,594
PROCESS FOR UTILIZING WASTE LUBRICATING OILS
Bruce P. Pelrine, Trenton, N.J., and Dennis E. Walsh, Richboro, Pa., assignors to Mobil Oil Corporation, New York, N.Y.
Filed Mar. 17, 1980, Ser. No. 130,928
Int. Cl.³ C10L *1/00, 1/04*
U.S. Cl. 44—50 **6 Claims**

1. A process for reclaiming waste hydrocarbon oils of lubri-

cating viscosity comprising blending used or waste oil of lubricating viscosity with a suitable resid or visbroken resid until an

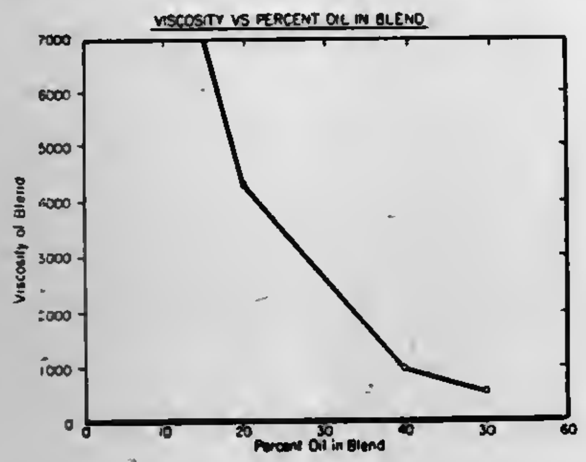

oil with a viscosity of less than about 43,000 centastokes is obtained.

4,299,595
METHOD OF OPERATING A CYCLICAL PRESSURE-SWING ADSORPTION INSTALLATION

Christian Benkmann; Paul Leitgeb, and Stefan Asztalos, all of Munich, Fed. Rep. of Germany, assignors to Linde Aktiengesellschaft, Wiesbaden, Fed. Rep. of Germany and Bayer Antwerpen N.V., Antwerp, Belgium, a part interest

Filed Nov. 29, 1979, Ser. No. 98,508

Claims priority, application Fed. Rep. of Germany, Nov. 30, 1978, 2851847

Int. Cl.[3] **B01D** *53/04*

U.S. Cl. 55—21 **14 Claims**

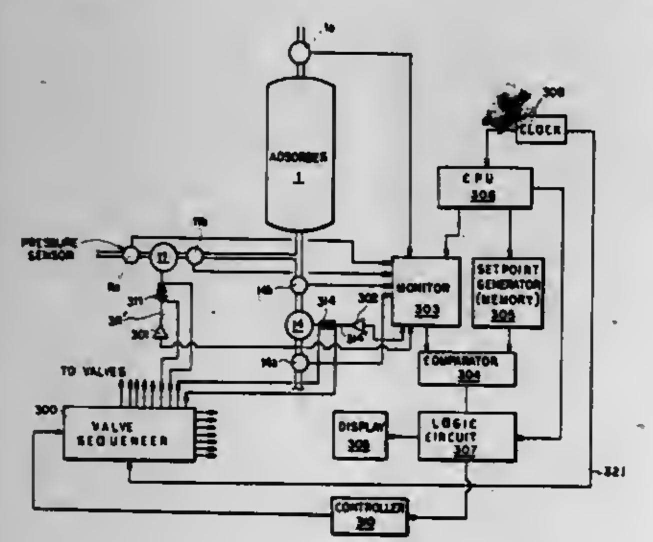

1. A method of operating a multi-adsorber pressure swing adsorber installation which comprises a multiplicity of adsorber elements and respective duct elements and valve elements interconnecting said adsorber elements and sequenced to operate said adsorbers sequentially and to cycle each adsorber through an adsorption stage at an elevated pressure for a plurality of time slots into which the cycle is divided, through at least one pressure-relief phase over at least one corresponding time slot by pressure equalization with other adsorbers, through at least one purging phase by connection to another adsorber and through at least one pressure buildup phase with such pressure equalization, said method comprising the steps of:

monitoring a physical parameter of the operation of at least some of said elements of each adsorber over the cyclical operation of said adsorbers and comparing the monitored physical parameter with a setpoint value thereof corresponding to the respective point in the sequence to detect a defective one of said elements sustaining an apparatus failure;

isolating the adsorber associated with the defective element from the remainder of said installation and removing the isolated adsorber from service; and

modifying the number of operating phases and time slots per cycle of the adsorbers remaining effective in said installation corresponding to the number os such adsorber remaining effective by continuing the cycling of some of the adsorbers while temporarily interrupting the cycling of other adsorbers, to establish a new sequence corresponding to the number of remaining adsorbers without interrupting the input and output of the installation.

4,299,596
ADSORPTION PROCESS FOR THE SEPARATION OF GASEOUS MIXTURES

Christian Benkmann, Munich, Fed. Rep. of Germany, assignor to Linde Aktiengesellschaft, Wiesbaden, Fed. Rep. of Germany

Filed Feb. 1, 1977, Ser. No. 764,508

Claims priority, application Fed. Rep. of Germany, Feb. 4, 1976, 2604305

Int. Cl.[3] **B01D** *53/04*

U.S. Cl. 55—26 **21 Claims**

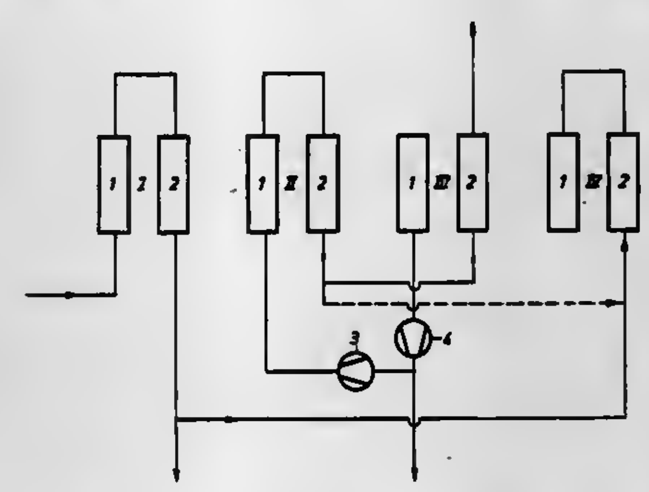

1. A selective adsorption process for the separation of gaseous mixtures comprising the steps of:

(a) passing a feed gas mixture containing components A and B successively at a first pressure through two adsorption beds selective for component A until the evolving adsorption front of component A substantially reaches the outflow end of the first adsorption bed or has only unsubstantially penetrated into the second adsorption bed, discharging an A-free product gas from the outflow end of the second adsorption bed, then interrupting the feeding of the feed gas mixture to the first adsorption bed;

(b) expanding both adsorption beds in the adsorption direction to a lower pressure sufficient so that proportions of unadsorbed component A emerge from said first adsorption bed, and so that said emerged proportions from the first adsorption bed are adsorbed in the second adsorption bed, and withdrawing an A-free gas from the second adsorption bed;

(c) at the same pressure as in step (b), conducting a further gaseous mixture in the adsorption direction through both adsorption beds, the partial pressure of component A in said further gaseous mixture being higher than in the feed gas; interrupting the feeding of said further gaseous mixture before the breakthrough of component A through the second adsorption bed, and withdrawing an A-free gas from said second adsorption bed;

(d) disconnecting both adsorption beds from one another, and expanding the first adsorption bed loaded substantially completely with component A to recover component A; and at the same time expanding the second adsorption bed, partially loaded with component A, in a countercurrent direction to the adsorption process and passing a purge gas in said countercurrent direction through the expanded second adsorption bed to desorb component A; and

(e) reconnecting both adsorption beds with each other and charging same to said first pressure of step (a).

4,299,597
PROCESS AND FILTER CONTROL SYSTEM FOR THE CYCLIC COUNTER-SCAVENGING OF DIAPHRAGM-ACTIVATED FILTER HOSES

Hans Oetiker, St. Gallen; Emanuel Kummer, Gossau; Kurt Rusterholz, Jona, and Hermann Gämperle, Bronschhofen, all of Switzerland, assignors to Gebruder Buhler AG, Uzwil, Switzerland

Filed Feb. 14, 1980, Ser. No. 121,509

Claims priority, application Fed. Rep. of Germany, Feb. 19, 1979, 2906353

Int. Cl.[3] **B01D** *46/04;* **F16K** *31/45*

U.S. Cl. 55—96 **17 Claims**

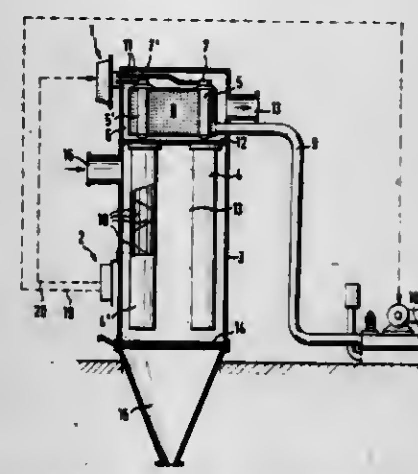

1. In a filter apparatus including a housing having a plurality of filter hoses and scavenging means therefor, a process for the control of the control dimensions of the cyclic counter-scavenging of said filter hoses by the cyclic fluid activation of diaphragm valves associated with said filter hoses, said process comprising:

providing electronic timing signals for a predetermined scavenging cycle;

transforming said electronic timing signals into at least two groups of independently changeable control signals from said timing signals for the fluidic activation of the diaphragm valves; and

influencing said control dimensions of each of said scavenging cycles by applying said control signals to electromechanical transforming elements controlling the fluidic activation of said diaphragm valves.

4,299,598
PANEL GAS FILTER FOR LIMESTONE DUST

Ryszard K. Dutkiewicz, 2 Tudor City Place, 42nd St., New York, N.Y. 10017

Filed Mar. 25, 1977, Ser. No. 781,189

Claims priority, application South Africa, Mar. 24, 1976, 76/1808

Int. Cl.[2] **B01D** *46/32*

U.S. Cl. 55—99 **3 Claims**

1. A method of operating a panel bed filter comprising continuously passing a filter medium consisting of limestone ammonium nitrate granules through the panel bed filter so that the surface of the filter medium exposed between the plates is

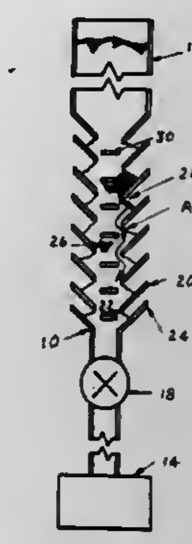

continuously changing and passing gas containing limestone dust through the panel bed filter.

4,299,599
WATER PRODUCING APPARATUS

Tetsu Takeyama; Kenkoku Azuma; Akira Ikeda; Toshie Yamamoto, and Shigeho Katsurada, all of Amagasaki, Japan, assignors to Mitsubishi Denki Kabushiki Kaisha, Tokyo, Japan

Filed May 6, 1980, Ser. No. 147,115

Claims priority, application Japan, May 9, 1979, 54-57766; May 15, 1979, 54-59849; Jul. 3, 1979, 54-85671

Int. Cl.[3] **B01D** *53/04*

U.S. Cl. 55—180 **2 Claims**

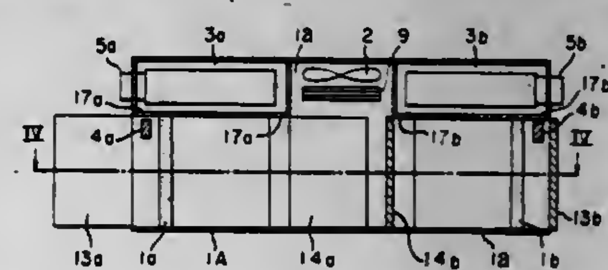

1. A water producing appartus comprising:

a housing;

at least two adsorbent containing chambers in said housing, each of said adsorbent containing chambers having an inlet and an outlet;

door means for said inlet and said outlet of each of said adsorbent containing chambers;

a recycling passage for each of said adsorbent containing chambers, each said recycling passage including means connected to each said adsorbent containing chamber on both sides of said adsorbent;

a heating chamber, including heating means, in each said recycling passage;

a common chamber common to all said outlets;

condenser means associated with said common chamber;

feed means adapted to feed air through at least one of said adsorbent containing chambers and into said common chamber; and

means for selectively connecting the gas in each said recycling passage to said condenser means, whereby the air passing through the adsorbent containing chamber which is in the adsorbing step cools the gas in said condenser means.

4,299,600

TRAPPER DEVICE FOR COLLECTING AND INCINERATING FINE PARTICULATES INCLUDED IN EXHAUST GAS FROM A DIESEL ENGINE

Kiyoshi Kobashi, Mishima, Japan, assignor to Toyota Jidosha Kogyo Kabushiki Kaisha, Toyota, Japan

Filed Mar. 17, 1980, Ser. No. 131,001

Claims priority, application Japan, Jan. 9, 1980, 55/507

Int. Cl.^{3} F01N *3/02; 3/36; 3/38; 7/04*

U.S. Cl. 55—213 **6 Claims**

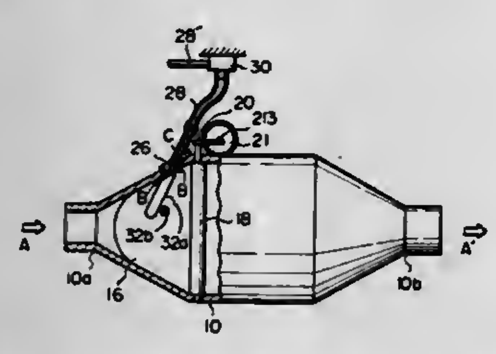

1. A trapper apparatus for fine particulates included in an exhaust gas from an internal combustion engine, comprising:

a casing having axially spaced opposing inlet and outlet ends, said inlet end being adapted for receiving the exhaust gas from the engine, said outlet end being adapted for discharging the purified exhaust gas from the casing;

first and second chambers which are arranged between said ends of the casing;

a first and a second trapper unit arranged in the first and the second chambers, respectively, each of the trapper units comprising a porous material capable of catching the fine particulates in the exhaust gas, each of the trapper units having a first open end near the inlet end of the casing and a second open end near the outlet end of the casing;

a valve member arranged between the inlet end of the casing and the first and the second trapper units, actuator means for moving said valve member between a first position wherein the inlet end communicates with the first trapper unit for introducing the exhaust gas into the first trapper unit and a second position wherein the inlet end communicates with the second trapper unit for introducing the exhaust gas into the second trapper unit;

heater means arranged in the casing for generating a heat for burning the particulates included in the trapper units;

a fuel inlet opened to the interior of the casing at a position between the inlet end of the casing and the trapper units, said fuel inlet being adapted for receiving an amount of fuel for burning the particulates collected in the trapper units;

pipe means mounted on the valve member for aligning the fuel inlet, when the valve member is in its first position, with the second trapper unit, and for aligning the fuel inlet, when the valve member is in its second position, with the first trapper unit, whereby fuel is introduced into a closed trapper unit for burning the particulates therein, and;

sucking means which sucks a controlled amount of exhaust gas and air into said pipe means.

4,299,601

APPARATUS FOR FILTERING, WASHING AND COOLING GASES

Hugo Schlachet, Cleveland Heights, Ohio, assignor to Bessam Manufacturing, Inc., Cleveland, Ohio

Filed Sep. 15, 1980, Ser. No. 187,599

Int. Cl.^{3} B01D *47/06*

U.S. Cl. 55—230 **3 Claims**

1. In an apparatus for filtering, washing and cooling gas the combination including:

means forming a chamber, inlet ducting for conducting gas to said chamber and outlet ducting for conducting gas away from said chamber, a foraminous wall within said chamber extending transverse to the direction of gas flow and through which gas passes in its trip from the inlet ducting to the outlet ducting, a pool of water disposed in the bottom of said chamber, means for controlling the upper surface level of said water, said water being of a depth controlled by said controlling means, means for forcing gas through said foraminous wall and means for spraying a curtain of water from said pool across the chamber between the inlet ducting and the wall, said sprayed water serving to filter, wash and cool gas, said foraminous wall serving to prevent entrainment of large droplets of water in the stream of gas passing therethrough, the improvement comprising,

the means for spraying water including only a single disc rotatable in one direction about an axis, said rotation being in a substantially vertical plane substantially perpendicular to the flow of gas, said disc having a least one projection extending out of the plane of said disc adjacent its periphery, the lowest portion of said disc being covered with water;

drive means for rotating said disc in said one direction about its axis;

upper and lower atomizing members fixed on a mounting surface so as not to rotate with said disc, each said atomizing member being located substantially radially of said disc and through the plane thereof and being disposed adjacent the portion of the periphery of the disc which travels upwardly when said disc is rotated in said one direction, said mounting surface being coaxial with said disc,

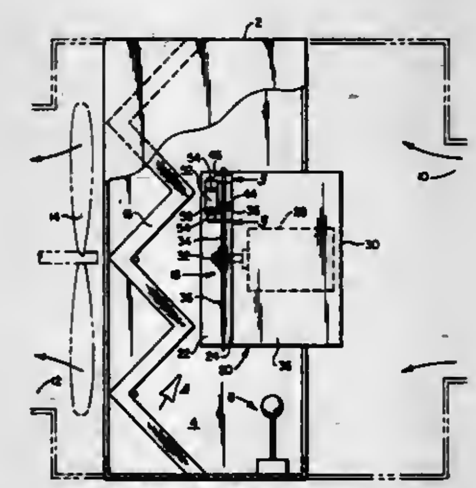

said atomizing members being disposed below the axis of said disc but above the upper surface of said water,

said upper atomizing member extending closer to said axis than said lower atomizing member,

the plane including said axis of said disc and said upper atomizing member makes an angle of substantially 45° with the vertical plane through said axis of said disc,

said mounting member is provided with means for limiting the dispersion of the spray provided by said disc in a direction parallel to the axis thereof, said limiting means comprises a shield member mounted on said mounting member and having an edge spaced from but substantially parallel to the plane of said disc, said edge of said shield member lying adjacent said upwardly-travelling portion of said disc, said edge of said sheild member lies adjacent said upper atomizing member, and

means for varying the spacing between said edge of said shield member and said disc.

4,299,602

DEVICE FOR WASHING A POLLUTED GAS AND INSTALLATION EQUIPPED WITH SUCH A DEVICE

Andre Cordier, Montrouge, and Benoit de Metz-Noblat, Pont a Mousson, both of France, assignors to Air Industrie, Courbevoie, France

Filed May 12, 1980, Ser. No. 148,743

Claims priority, application France, May 17, 1979, 79 12604

Int. Cl.^{3} B01D *47/12*

U.S. Cl. 55—240 **10 Claims**

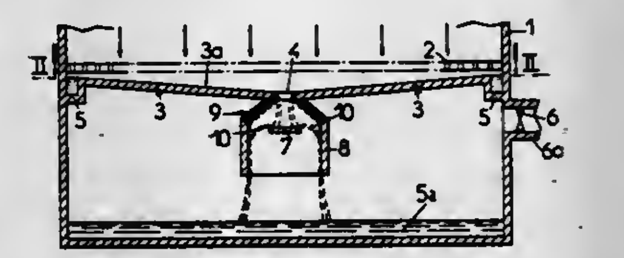

1. In a washing device for washing a polluted gas comprising means for causing the polluted gas to flow downwardly in the device from top to bottom, means for causing a washing liquid to continuously flow down an upper face of a washing surface of the device, said washing surface having at least one orifice through which both gas and liquid flow out downwardly, said device further comprising at least one transverse wall centered in said device below said orifice and means defining a channel having a vertical axis and vertical walls, the vertical walls of said channel surrounding said transverse wall, the improvement wherein said channel opens downwardly and the upper end of said channel is connected in a fluid-tight manner to said orifice of said washing surface by means defining a diverging surface which cooperates with said washing surface to form a continuous surface.

6. In a paint installation cabin having at least one washing device, said at least one washing device being constructed in accordance with claim 1.

4,299,603

SELF-CLEANING SCREEN ASSEMBLY FOR RADIATOR AIR INLETS

Peter Friesen, R.R. #1, Box 314, Group 24, Winkler, Manitoba, Canada R0G 2X0

Continuation-in-part of Ser. No. 918,815, Jun. 26, 1978, abandoned. This application Apr. 13, 1979, Ser. No. 29,661

Int. Cl.^{3} B01D *46/26;* **B60K** *11/04*

U.S. Cl. 55—290 **19 Claims**

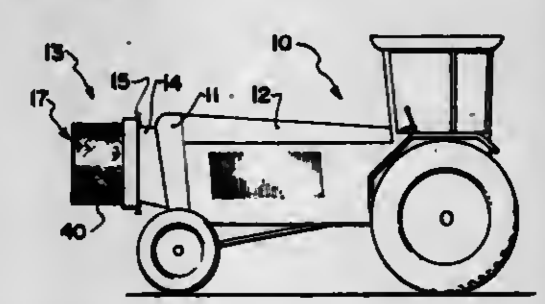

1. A screen assembly for the radiator intakes of the engines of tractors, farm equipment such as combines, trucks and the like comprising in combination support means attachable to the front of the radiator air intake, a substantially cylindrical screen component journalled for rotation upon said support means whereby substantially all air entering said radiator air intake passes through said screen component, said screen component including air operated means to rotate said screen component in one direction as air passes therethrough and into the radiator air intake and means to substantially seal the area between said support means and said screen component, said last mentioned means including the inner end of said screen component engaging said support means in spaced relationship therefrom thereby defining an annular channel between said support means and the inner end of said screen component, said channel constituting said area between said support means and said screen component, and means formed around the periphery of said screen component, and means formed around the periphery of said inner end of said screen component and positioned to develop positive air pressure within said annular channel directed radially outwardly from the interior of said screen component and through said annular channel, when said screen component is rotating, said means formed around the periphery of said inner end of said screen component comprising a plurality of relatively small blades formed around the periphery of said inner end.

4,299,604

AIR INDUCER AND BACKWASHER FOR AN AIR CLEANER

David L. Brenholt, Dundas, Minn., assignor to Donaldson Company, Inc., Minneapolis, Minn.

Filed May 27, 1980, Ser. No. 153,176

Int. Cl.^{3} B01D *46/04;* **F04F** *5/52*

U.S. Cl. 55—303 **13 Claims**

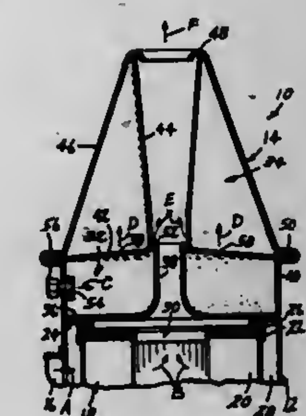

1. An air flow inducing and reverse pulse cleaning device for use with particulate material filter elements comprising:

a generally annular shaped air inlet plenum adapted to be located adjacent an outlet of a filter element, said air inlet plenum being defined by an annular bottom wall, a flexible annular wall disposed above said bottom wall, an outer end wall extending between an outer perimeter of said flexible and bottom walls and an inner end wall extending upwardly from said bottom wall, said air inlet plenum having an inlet for receiving pressurized fluid from a source and an outlet formed between an upper end of said inner end wall and said flexible wall for directing the pressurized fluid past said outlet of said filter element;

an accumulator chamber disposed above said air inlet plenum, said chamber being defined by said flexible wall, an inner wall member extending upwardly from an inner end of said flexible wall, an outer wall member extending upwardly from an outer end of said flexible wall, a top wall member, and an outlet gap formed between said top wall member and an uppermost portion of said inner wall member;

at least one bleed hole formed through said flexible wall for diverting to said accumulator chamber a portion of the pressurized fluid supplied to said air inlet plenum;

said flexible wall being movable between an air accumulating position wherein said flexible wall is flexed away from said bottom wall to move said inner wall member into sealing engagement with said top wall member closing said outlet gap during the application of pressurized fluid to said air inlet plenum, and a release position wherein said flexible wall moves to an unflexed state toward said bottom wall when no pressurized fluid is being supplied to said air inlet plenum to move said inner wall member away from said top wall member and allow accumulated pressurized fluid to escape from said accumulator chamber through said outlet gap; and

said top wall member being configured to direct accumu-

lated pressurized fluid from said accumulator chamber toward said outlet of said filter element, in a direction reverse to the flow of pressurized fluid from said outlet of said air inlet plenum, when said flexible wall moves to its release position.

7. An air cleaning apparatus comprising:

a housing having an inner surface defining a boundary of a filtering chamber and air inlet for passing air to be cleaned into said filtering chamber;

a hollow filter element supported in said housing, said filter element being comprised of porous media having an outer surface defining another boundary of said filtering chamber and upon which material to be filtered is deposited, said filter element having an outlet opening in communication with its hollow interior through which filtered air is passed;

means for inducing air flow through said filtering chamber and filter element to said outlet opening and for inducing a reverse pulse of air to remove material from the outer surface of said porous media;

said inducing means including an air inlet plenum having an inlet for receiving pressurized fluid from a source and a venturi section comprising a ring-shaped outlet for directing the pressurized fluid past the outlet opening from said filter element to induce the flow of particulate laden air through said filter element, an accumulator chamber for storing a portion of the pressurized fluid being supplied said accumulator chamber having an air outlet gap bleed means for diverting a portion of the pressurized fluid from said air inlet plenum to said accumulator chamber, and means for blocking the flow of the pressurized fluid accumulated in said accumulator chamber while the pressurized fluid is being supplied to the air inlet plenum, and for releasing the accumulated pressurized fluid from said accumulator chamber when the pressure within said air inlet plenum is relieved, in a direction reverse to the direction of flow of the pressurized fluid from the outlet of said air inlet plenum, to backwash particulate material from the outer surface of said porous media.

4,299,605

COLLECTING FILTER BAG

Fumihiko Aiyama, Musashino, and Kenzo Hiramatsu, Hoya, both of Japan, assignors to Kioritz Corporation, Japan

Filed Jul. 28, 1980, Ser. No. 172,572

Claims priority, application Japan, May 19, 1980, 55-67589[U]

Int. Cl.³ B01D *46/02*

U.S. Cl. 55—370 **1 Claim**

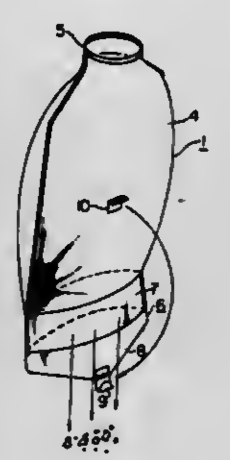

1. A dust collecting bag for a vacuum cleaner or the like comprising an air permeable cloth bag having an assembly end with an inlet opening adapted to be assembled onto a vacuum cleaner for reception of dust, dirt, and the like and a second end with a discharge opening extending oppositely from said inlet opening, said bag having opposing peripheral edges adjacent said discharge opening with a pair of opposing plate members extending unitarily with said bag is jointed relationship with said opposing peripheral edges thereby affording ease of folding and unfolding said opposing plate members for closing and opening said discharge opening, said opposing plate members being foldable into close contact with each other to prevent leakage from said bag through said discharge opening and further functioning as a reinforcement around said discharge opening, wherein one of said plate members has a band-like form, the other of said plate members has a tongue-like form and a hook element at its lower end, said bag has an apertured member attached thereto with said apertured member being adapted to receive said hook element in cooperative relationship to retain said plate members in closed condition with respect to said discharge opening.

4,299,606

RECOVERY OF HF AND HCL FROM GASEOUS MIXTURES THEREOF

Stephen Robota, North Tonawanda; Alastair J. H. McGregor, and Gregory A. R. Trollope, both of Lewiston, all of N.Y., assignors to Hooker Chemicals & Plastics Corp., Niagara Falls, N.Y.

Continuation of Ser. No. 755,873, Dec. 30, 1976, abandoned. This application Jan. 3, 1978, Ser. No. 866,661

Int. Cl.³ F25J *3/02*

U.S. Cl. 62—28 **10 Claims**

1. A substantially anhydrous process for separating HF and HCl from a gaseous mixture thereof comprising

A. feeding the gaseous mixture to the lower part of a rectification column, to provide an upward flow of gases therein, the column having a temperature in the upper part of from about −40° C. to about −85° C., and having a temperature in its lower part in the range of from about −30° C. to about 19° C., the column also having a countercurrent flow of a liquid and a gas,

B. withdrawing liquid HF from the bottom of the rectification column,

C. withdrawing a gaseous HCl from the upper part of the rectification column,

D. feeding liquid HCl to the upper part of the rectification column to provide a downward flow of liquid countercurrent to the upward flow of gases.

4,299,607

PROCESS FOR RECOVERING NITROGEN IN LOW PRESSURE TYPE AIR SEPARATION APPARATUS

Michimasa Okabe, and Shozi Koyama, both of Kudamatsu, Japan, assignors to Hitachi, Ltd., Tokyo, Japan

Filed May 14, 1980, Ser. No. 149,630

Claims priority, application Japan, May 16, 1979, 54-59128; Jan. 23, 1980, 55-5764

Int. Cl.³ F25J *3/04*

U.S. Cl. 62—13 **7 Claims**

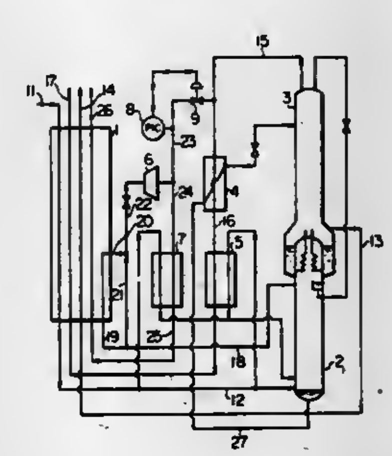

1. A process for recovering a product nitrogen gas in a low pressure type air separation apparatus provided with a reversing heat exchanger and a duplex type rectification tower having a high pressure column and a low pressure column, which comprises leading a nitrogen gas taken out of said high pressure column of said duplex type rectification tower to an expander for generating subcooling for the air separation apparatus, taking out the nitrogen gas from the outlet of the expander under a pressure higher than the pressure of a nitrogen gas to be taken out of said low pressure column of said duplex type rectification tower, adjusting the temperature of the nitrogen gas from the expander to a necessary inlet temperature for the reversing heat exchanger by passage through a heat exchanger, then passing the temperature adjusted nitrogen gas through the reversing heat exchanger, and taking the nitrogen gas out of the reversing heat exchanger as said product nitrogen gas.

4,299,608

JOINT DOPING OF POROUS GLASSES TO PRODUCE MATERIALS WITH HIGH MODIFIER CONCENTRATIONS

Pedro B. Macedo, 6100 Highboro Dr., Bethesda, Md. 20034; Mrinmay Samanta, Washington, D.C., and Joseph H. Simmons, Potomac, Md., assignors to Pedro Buarque de Macedo, Bethesda, and Theodore Aaron Litovitz, Silver Spring, both of Md.

Division of Ser. No. 755,590, Dec. 30, 1976, Pat. No. 4,183,620. This application Sep. 14, 1979, Ser. No. 75,713

The portion of the term of this patent subsequent to Feb. 12, 1997, has been disclaimed.

Int. Cl.³ C03C *25/02*

U.S. Cl. 65—3.1 **5 Claims**

1. In a method of producing a glass article comprising adding a dopant to a porous glass matrix with interconnective pores by immersing the porous glass matrix in a solution of a dopant to impregnate the porous glass matrix with the solution, precipitating the dopant from the solution within the porous glass matrix, removing solvent and where necessary decomposition products from the porous glass matrix and collapsing the porous glass matrix to a solid form, the improvement which comprises immersing the porous glass matrix in a dopant impregnating solution containing a mixture of dopants to impregnate the porous glass matrix with the solution and form an impregnated porous glass matrix with the following composition:

(I) 7 to 25 weight percent of the oxide equivalent of at least one member selected from the group consisting of Pb and Bi, and

(II) 1.5 to 9 mole percent of the oxide equivalent of at least one member selected from the group consisting of Cs, Rb, and K.

4,299,609

OPTICAL UNIT HAVING A LONGITUDINAL SIDE COUPLING ZONE

Hubert Aulich; Franz Auracher, and Hans H. Witte, all of Munich, Fed. Rep. of Germany, assignors to Siemens Aktiengesellschaft, Berlin & Munich, Fed. Rep. of Germany

Division of Ser. No. 22,705, Mar. 22, 1979, Pat. No. 4,243,296, which is a continuation-in-part of Ser. No. 946,521, Sep. 27, 1978, abandoned. This application Mar. 31, 1980, Ser. No. 135,341

Claims priority, application Fed. Rep. of Germany, Sep. 27, 1977, 2743368

Int. Cl.³ C03C *25/02;* L03B *17/025*

U.S. Cl. 65—3.13 **8 Claims**

1. A device for producing an optical unit comprising at least one glass fiber having a glass core surrounded by a glass cladding layer with an index of refraction less than that of the core with a step in the index of refraction occurring at the boundary therebetween, said glass fiber having a constant cross-sectional dimension with the core having at least one constriction therein to form a coupling zone, said device comprising a double crucible having an inner crucible with at least one nozzle opening arranged in an outer crucible with each nozzle opening of the inner crucible being arranged to discharge within a nozzle opening of the outer crucible, means to draw a fiber from said double crucible and means for regulating the flow through each of the nozzle openings of the inner crucible

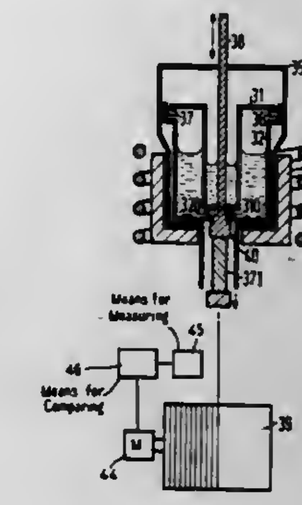

to periodically reduce the flow through each of the inner crucible to cause a constriction in the diameter of each core of the fiber as it is being drawn.

4,299,610

METHOD AND APPARATUS FOR MANUFACTURING CRYSTALLINE BLAST FURNACE SLAG

Ryo Ando; Shigeru Araki, both of Yokohama; Hideaki Hoshi, Tokyo, and Kazuyoshi Sato, Kawasaki, all of Japan, assignors to Nippon Kokan Kabushiki Kaisha, Tokyo, Japan

Filed Mar. 25, 1980, Ser. No. 133,931

Claims priority, application Japan, Apr. 13, 1979, 54-44191; Jan. 22, 1980, 55-5965

Int. Cl.³ C04B *5/00*

U.S. Cl. 65—19 **5 Claims**

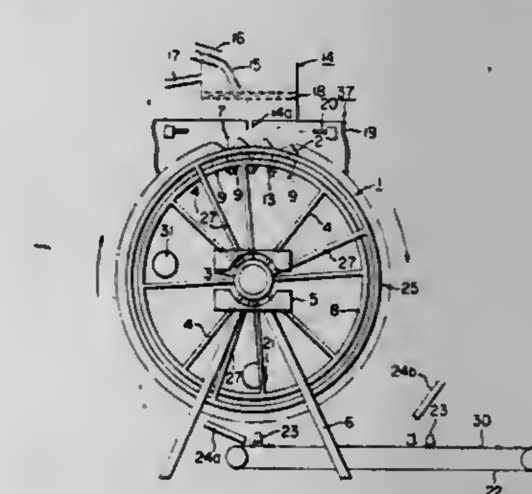

1. A method for manufacturing a crystalline blast furnace slag, characterized by comprising the steps of:

endlessly connecting at prescribed intervals a plurality of rectangular metal cooling bodies, each having a sharp top edge and a hollow for cooling water, to form a plurality of cooling grooves, each cooling groove having top end width of from 40 to 80 mm corresponding to said prescribed intervals and a depth of from 100 to 300 mm and becoming narrower toward the depth thereof, each cooling groove being between two adjacent ones of said cooling bodies;

continuously moving said plurality of cooling bodies endlessly connected in circulation in the connecting direction thereof;

continuously pouring a molten blast furnace slag sequentially into said plurality of cooling grooves extending transversely to the moving direction of said plurality of cooling bodies, in an atmosphere of at least one of an inert

gas and a reducing gas, while continuing to move in circulation said plurality of cooling bodies; and,

circulating a cooling water through said plurality of hollows for cooling water of said plurality of cooling bodies during pouring of the molten blast furnace slag into said plurality of cooling grooves, to cool said plurality of cooling bodies, thereby cooling and solidifying the molten blast furnace slag poured into said plurality of cooling grooves by the contact with mutually facing outer surfaces of two adjacent ones of said cooling bodies thus cooled, to manufacture a crystalline blast furnace slag.

4,299,611

METHOD AND APPARATUS FOR CONVERTING HAZARDOUS MATERIAL TO A RELATIVELY HARMLESS CONDITION

H. Larry Penberthy, 631 S. 96th St., Seattle, Wash. 98108

Filed Jan. 18, 1980, Ser. No. 113,346

Int. Cl.[3] C03B *5/02, 5/16*

U.S. Cl. 65—27 20 Claims

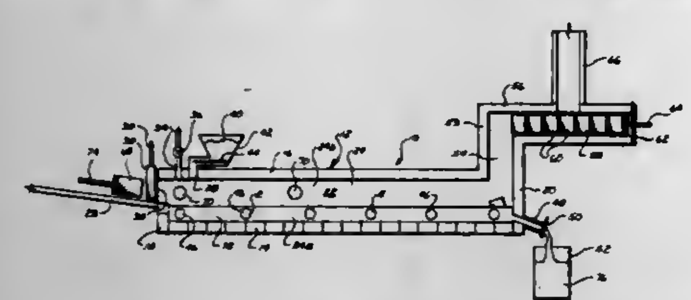

1. A method for converting potentially harmful waste material to a less potentially harmful condition, said method comprising:

a. providing a glass material in an enclosed horizontally extending conversion chamber, said chamber comprising a rear breakdown area and a forward settling area spaced horizontally from the breakdown area, and maintaining said glass material in a molten condition in a lower portion of said chamber,

b. directing said waste material into said conversion chamber at a location proximate said glass material at said breakdown area,

c. maintaining said glass material at a sufficiently high temperature to cause the waste material to be broken down into an ash component and a gaseous component, with at least some of the ash component being particulate ash suspended in said gaseous component,

d. moving said gaseous component generally horizontally from said breakdown area to a location over said molten glass material in said settling area, with at least part of said suspended particulate ash settling onto the molten glass material in the settling area to form a combined ash-glass material,

e. discharging said combined ash-glass material to a cooling zone to form said waste-glass material into a solid waste-glass product.

4,299,612

APPARATUS AND METHOD FOR ATTENUATING FLOAT GLASS

John E. Sensi, Arnold, Pa., assignor to PPG Industries, Inc., Pittsburgh, Pa.

Filed Aug. 1, 1980, Ser. No. 174,480

Int. Cl.[3] C03B *18/06*

U.S. Cl. 65—99 A 14 Claims

1. In an apparatus for attenuating a glass ribbon supported upon a pool of molten metal within a chamber, the apparatus of the type having a pair of adjacent elongated fluid cooled members each supporting a single edge engaging device which engages a preselected area of the marginal edge portion of said ribbon, wherein each of said elongated fluid cooled members and its corresponding edge engaging device extracts a quantity of heat from the marginal edge portion of said ribbon to undesirably affect the transverse temperature profile of said ribbon, the improvement comprising:

a single elongated barrel having a first end portion and a second end portion;

a pair of edge roll wheels;

means for mounting said pair of edge roll wheels in spaced relation to one another and to the first end portion of said single elongated barrel to engage an area of said marginal edge portion greater than said preselected area engaged by either one of said edge engaging devices;

means for supporting said second end portion of said single elongated barrel outside said chamber;

means for cooling said single elongated barrel, said mounting means, and said pair of edge roll wheels wherein the heat extracted from said marginal edge portion by said single elongated barrel, mounting means, and pair of edge roll wheels is less than the sum of the heat extracted from said marginal edge portion by said pair of adjacent elongated fluid cooled members and corresponding edge engaging devices, to reduce the effect of the attenuating apparatus on the transverse temperature profile of the ribbon.

12. In a method of attenuating a glass ribbon which is supported within a chamber and advances downstream there-

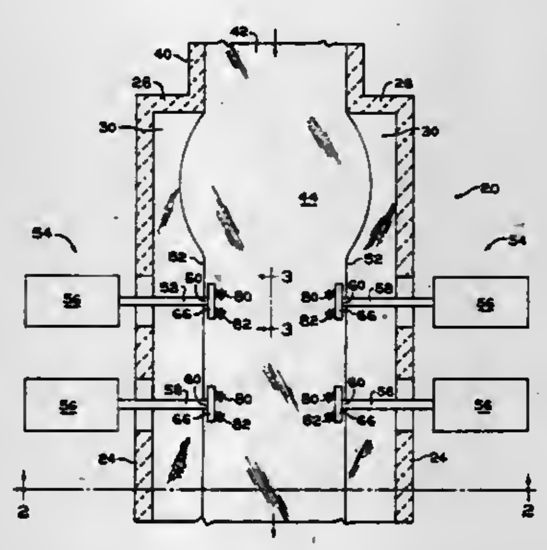

through upon a pool of molten metal, wherein a pair of adjacent, elongated fluid cooled members each support a single edge engaging device which engages a preselected area of the marginal edge portion of said ribbon, wherein each of said elongated fluid cooled members and its corresponding single edge engaging device extracts a quantity of heat from the marginal edge portion of said ribbon and thereby undesirably affects the transverse temperature profile of said ribbon, the improvement comprising the steps of:

mounting a pair of edge roll wheels to the first end portion of a single elongated barrel in spaced apart relationship;

supporting a second end portion of the single elongated barrel outside the chamber to position said pair of edge roll wheels to engage an area of the marginal edge portion of the ribbon greater than the preselected area engaged by each of said edge engaging devices; and

cooling the elongated barrel and the pair of edge roll wheels, wherein the heat extracted from said marginal edge portion by said single elongated barrel and said pair of edge roll wheels is less than the sum of the heat extracted from said marginal edge portion by said pair of adjacent elongated fluid cooled members and corresponding edge engaging devices, to minimize the effect of the attenuating method upon the transverse temperature profile of the ribbon.

4,299,613

CONTROLLED RELEASE OF TRACE NUTRIENTS

Nathan F. Cardarelli, Barberton, Ohio, assignor to Environmental Chemicals, Inc., Wauconda, Ill.

Continuation-in-part of Ser. No. 14,118, Feb. 22, 1979, which is a continuation-in-part of Ser. No. 5,174, Jan. 22, 1979, which is a continuation-in-part of Ser. No. 916,570, Jun. 19, 1978, Pat. No. 4,166,111. This application Jun. 22, 1979, Ser. No. 51,102

Int. Cl.[3] A01N *25/00*

U.S. Cl. 71—64 F 25 Claims

1. A controlled release plant nutrient dispenser comprising: a uniformly dispersed admixture of a plant nutrient, a porosigen, and 100 parts by weight of a polymer matrix,

said polymer matrix made from a compound selected from the class consisting of an ethylene-vinyl acetate copolymer, an ethylene-propylene copolymer, a low density polyethylene, and combinations thereof;

the amount by weight of said ethylene constituent in said ethylene-vinyl acetate copolymer ranging from about 60 percent to about 95 percent, the weight average molecular weight of said ethylene-vinyl acetate copolymer ranging from about 40,000 to about 400,000;

the amount by weight of said ethylene constituent in said ethylene-propylene copolymer ranging from about 30 percent to about 75 percent, the weight average molecular weight of said ethylene-propylene copolymer ranging from about 50,000 to about 250,000;

said plant nutrient being required in minute amounts by a plant, the amount of said plant nutrient ranging from about 10 to about 160 parts by weight per 100 parts of said polymer matrix,

the amount of said porosigen ranging from about 0.1 to about 70 parts by weight per 100 parts of said polymer matrix, said porosigen having a solubility of less than 100 grams per 100 grams of water so that upon contact of said dispenser with soil moisture, the plant nutrient is released at a rate required by the plant to stimulate growth.

4,299,614

NOVEL ALGICIDAL METHOD UTILIZING 1,4-DIPHENYL-3-PYRAZOLIN-5-ONES

James R. Beck, and Robert P. Gajewski, both of Indianapolis, Ind., assignors to Eli Lilly and Company, Indianapolis, Ind.

Filed Jun. 19, 1980, Ser. No. 160,796

Int. Cl.[3] A01N *43/56*

U.S. Cl. 71—67 15 Claims

1. A method of reducing the vigor of algae which comprises contacting the algae with an algicidally effective amount of a compound of the formula

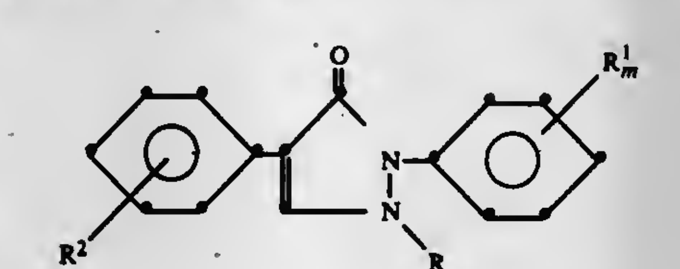

wherein

R represents C_1-C_3 alkyl;

R^1 and R^2 independently represent hydrogen, chloro, fluoro, bromo, methyl, methoxy, hydroxymethyl, or trifluoromethyl without restriction as to substituent or position except that when R^1 is para-chloro, m=1, and R^2 is simultaneously meta-trifluoromethyl, R is not simultaneously ethyl or propyl; and

m=1 or 2 with the proviso that when m=2, R^1 is halo.

4,299,615

METHOD OF INCREASING THE YIELDS OF SUGAR CANE WITH PHOSPHONIC ACIDS

Jerome A. Gourse, Skokie, Ill., assignor to Velsicol Chemical Corporation, Chicago, Ill.

Filed Dec. 19, 1979, Ser. No. 105,343

Int. Cl.[3] A01N *57/14; C07F 9/38*

U.S. Cl. 71—86 7 Claims

1. A method of increasing the recoverable sugar contained in sugar cane which comprises contacting the sugar plant during the period of from about 2 to about 10 weeks before harvesting with an effective amount of a compound of the formula

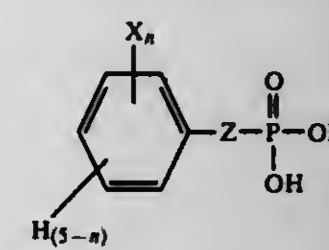

wherein X is selected from the group consisting of lower alkyl, halogen, trifluoromethyl and lower alkoxy; n is an integer from 0 to 2 provided that when n is 2 the X substituents are in the 2, 5 or 2, 6 positions; and Z is a straight or branched alkylene group containing from 1 to 5 carbon atoms.

4,299,616

HERBICIDE COMPOSITIONS OF EXTENDED SOIL LIFE

Daniel L. Hyzak, Saratoga, Calif., assignor to Stauffer Chemical Company, Westport, Conn.

Filed Mar. 31, 1980, Ser. No. 136,146

Int. Cl.[3] A01N *37/02*

U.S. Cl. 71—100 18 Claims

1. An herbicidal composition consisting essentially of

(a) an herbicidally effective amount of a thiolcarbamate having the formula

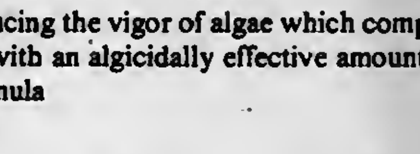

in which R^1, R^2, and R^3 are independently C_2-C_4 alkyl;

(b) an amount of a carbamate having the formula

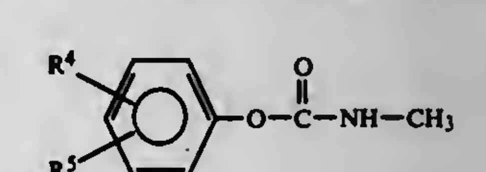

in which

R^4 and R^5 are each methyl,

R^4 is $—CF_3$ and R^5 is hydrogen, or

R^4 is $—CH_2Br$ and R^5 is hydrogen,

the amount of said carbamate being sufficient to extend the soil life of said thiolcarbamate; and

(c) an inert carrier.

4,299,617

METHOD AND COMPOSITION TO INCREASE THE SUGAR CONTENT OF SUGAR CANE

Brian Savory, St. Germain, and Jacques Desmoras, Orly, both of France, assignors to Rhone-Poulenc Agrochimie, Lyons, France

Continuation of Ser. No. 640,859, Dec. 15, 1975, abandoned. This application Mar. 16, 1978, Ser. No. 887,329

Claims priority, application France, Nov. 18, 1975, 75 35739

Int. Cl.³ A01N *37/38, 37/18*

U.S. Cl. 71—109 **9 Claims**

1. A process for treating sugar cane to increase the sugar content thereof, comprising contacting the sugar cane between the fourth and the fifteenth week before its harvest with an active, non-toxic quantity sufficient to increase sugar content of a compound of the formula

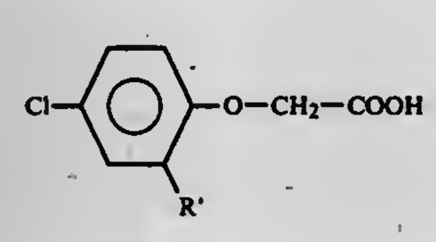

wherein:

R' is CHO or CH_2OH; or a sugar-cane-ripening-effective derivated ester, amide, metal or amine salt thereof.

4,299,618

METHOD FOR INCREASING SOYBEAN YIELD

Charles R. Downing, Metuchen, and Harold A. Kaufman, Piscataway, both of N.J., assignors to Mobil Oil Corporation, New York, N.Y.

Continuation-in-part of Ser. No. 588,276, Jun. 19, 1975, abandoned. This application Apr. 7, 1977, Ser. No. 785,612

Int. Cl.³ A01N *33/04*

U.S. Cl. 71—121 **4 Claims**

1. A method for increasing soybean crop yield that comprises applying to the foliage of soybean plants of small amounts of a trialkyl-2,4-dichlorobenzylammonium chloride having 2–16 carbon atoms per alkyl group; wherein, in the case of the Northern indeterminate varieties, application is at a rate of about 0.25–0.5 lb.a.i./acre during the fifth to eighth trifoliate leaf stage and, in the case of the Southern determinate varieties, application is at a rate of about 0.5–0.75 lb.a.i./acre during the tenth to eleventh trifoliate leaf stage.

4,299,619

ENERGY EFFICIENT PRODUCTION OF ALUMINUM BY CARBOTHERMIC REDUCTION OF ALUMINA

C. Norman Cochran, Oakmont, and Nancy M. Fitzgerald, Pittsburgh, both of Pa., assignors to Aluminum Company of America, Pittsburgh, Pa.

Filed Feb. 28, 1980, Ser. No. 125,644

Int. Cl.³ C22D *3/12*

U.S. Cl. 75—10 R **12 Claims**

1. A method for the production of aluminum by carbothermic reduction of Al_2O_3, comprising the steps of

(a) providing a stack-type reactor having an upper reaction zone and a lower reaction zone beneath the upper reaction zone;

(b) inserting Al_2O_3 and C into the upper reaction zone;

(c) heating the Al_2O_3 and C in the upper reaction zone by combustion of a portion of the C;

(d) reacting the Al_2O_3 with C at an elevated temperature in the upper reaction zone to form CO and a first liquid comprising Al_2O_3 and Al_4C_3;

(e) transferring the first liquid to the lower reaction zone; and

(f) heating the first liquid in the lower reaction zone to a temperature greater than the temperature in the upper reaction zone, thereby to form CO and a second liquid of Al and C.

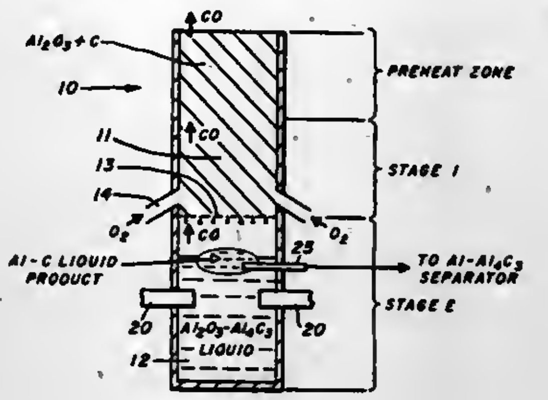

4,299,620

LAMELLAR GRAPHITE INOCULANT

Roman S. Skorski; Maria B. Skorska, both of Northport, Ala., and Malgorzata B. Skorska, Knoxville, Tenn., assignors to The University of Alabama, Tuscaloosa, Ala.

Filed Dec. 27, 1979, Ser. No. 107,541

Int. Cl.³ C22C *33/08*

U.S. Cl. 75—53 **27 Claims**

1. An inoculant for introduction of low temperature boiling metals into molten iron or molten steel, which comprises a combination of an alkaline earth metal selected from the group consisting of calcium, magnesium, and mixtures thereof, and an alkali metal, which metals penetrate the atomic layers of graphite, forming thereby lamellar compound.

4,299,621

HIGH MECHANICAL STRENGTH REINFORCEMENT STEEL

Henrik Giflo, III Ujitok u. 5, Miskolc, Hungary

Filed Jul. 3, 1979, Ser. No. 54,528

Int. Cl.³ F16H *29/10*

U.S. Cl. 75—124 **3 Claims**

1. A high mechanical strength reinforcement steel able to be welded up to a determined carbon content, and stable to atmospheric corrosion, consisting essentially of, besides iron and the usual residual elements, 0.04 to 1.2% by weight of carbon, 1 to 3.5% by weight of manganese, 0.1 to 2.8% by weight of silicon, 0.01 to 1% by weight of molybdenum, 0.05 to 3% by weight of copper, 0.01 to 3% by weight of nickel, 0.001 to 0.15% by weight of zirconium or mixture of zirconium and cerium, 0.01 to 0.3% by weight of niobium or mixture of niobium and vanadium, 0.008 to 0.035% by weight of nitrogen, 0.0005 to 0.025% by weight of calcium, 0.02 to 0.15% by weight of aluminum and 0.001 to 0.05% by weight of boron or mixture of boron and beryllium.

4,299,622

MAGNETIC ALLOY

Hiroshi Kimira; Kenji Abiko; Takashi Sato; Isamu Yoshii, all of Sendai; Sadao Watanabe, Izumi, and Yutaka Takei, Sendai, all of Japan, assignors to Sony Corporation, Tokyo, Japan

Filed Nov. 5, 1979, Ser. No. 91,033

Claims priority, application Japan, Nov. 6, 1978, 53-136563

Int. Cl.³ C22C *38/06*

U.S. Cl. 75—124 **2 Claims**

1. A magnetic alloy containing not less than 0.03 weight % but not more than 5.0 weight % of P, not less than 3.0 weight % but not more than 26.0 weight % of Al and Si totally (where Al is not less than 0.01 weight % but not more than 13.0 weight % and Si is not less than 0.01 weight % but not more 13.0 weight %), the remaining part consisting mainly of Fe, said alloy being characterized in that P is present on the grain boundaries thereof in an amount of more than 0.5 weight % of the atoms which form said grain boundaries.

4,299,623

CORROSION-RESISTANT WELDABLE MARTENSITIC STAINLESS STEEL, PROCESS FOR THE MANUFACTURE THEREOF AND ARTICLES

Vladimir G. Azbukin, Iskrovsky prospekt, 28, kv. 430; Jury F. Balandin, ulitsa Basselnaya, 117, korpus 1, kv. 85; Igor V. Gorynin, ulitsa Gromova, 16, kv. 50; Lev Y. Gluskin, ulitsa Grafova, 2, kv. 37; Jury I. Zvezdin, Kostromskol prospekt, 42, kv. 23; Alexandr G. Ignatenko, Grazhdansky prospekt, 23/2, kv. 74; Alexandr N. Krasnov, ulitsa Shotmana, 4, kv. 203, all of Leningrad; Rostislav K. Melekhov, ulitsa Ugorskaya, 27, kv. 10, Lvov; Inna S. Osipova, ulitsa Ryleeva, 21, kv. 9, Leningrad; Valery N. Pavlov, Dmitrovsky pereulok, 11, kv. 16, Leningrad; Alexandr A. Khokhlov, ulitsa Karpinskogo, 23/1, kv. 15, Leningrad; Ivan A. Stepanov, ulitsa Chaikovskogo, 33, kv. 30, Leningrad; Alexandr F. Anfimov, ulitsa Ushinskogo, 7, korpus 1, kv. 39, Leningrad; Vasily V. Ardentov, ulitsa Gromova, 16, kv. 43, Leningrad; Viktor M. Burmakin, ulitsa Sedova, 86, kv. 199, Leningrad; Viktor A. Ignatov, ulitsa Sofil Kovalevskoi, 10, korpus 2, kv. 169, Leningrad; Eduard A. Rokhlin, Varshavskaya ulitsa, 58, kv. 91, Leningrad, and Vladimir V. Zhitkov, Promyshlennaya ulitsa, 38, kv. 66, Leningrad, all of U.S.S.R.

Filed Nov. 5, 1979, Ser. No. 91,157

Int. Cl.³ C22C *38/40, 38/48, 38/50*

U.S. Cl. 75—128 R **4 Claims**

1. A corrosion-resistant weldable martensitic steel consisting of carbon 0.06 to 0.10 weight percent, chromium 15.1 to 16.5 weight percent, nickel 3.5 to 4.45 weight percent, silicon 0.10 to 0.60 weight percent, manganese 0.20 to 0.50 weight percent, at least one element selected from the group consisting of niobium 0.25 to 0.40 weight percent and zirconium 0.05 to 0.20 weight percent, at least one element selected from the group consisting of yttrium 0.05 to 0.20 weight percent, cerium 0.05 to 0.15 weight percent and lanthanum 0.05 to 0.15 weight percent, phosphorus not more than 0.025 weight percent, sulfur not more than 0.02 weight percent, copper not more than 0.20 weight percent, the remainder being substantially iron and unavoidable nonferrous impurities.

4,299,624

MOLTEN METAL TREATMENT

Kirk D. Miller, Rexdale; John B. Flood, Willowdale; George Dimou, Toronto; Frederick E. Kara, Islington, and Richard W. Amos, Etobicoke, all of Canada, assignors to Canron Inc., Montreal, Canada

Division of Ser. No. 806,094, Jan. 13, 1977, Pat. No. 4,199,353. This application Jan. 23, 1980, Ser. No. 114,509

Claims priority, application Canada, Jan. 18, 1977, 269973

Int. Cl.³ C22C *33/08*

U.S. Cl. 75—130 R **21 Claims**

1. A process for producing ductile iron in which a separate heat-resistant capsule mounted from its top on the lower end of a plunging rod and enclosed except for side and floor openings to permit controlled entry of molten metal and escape of reaction products and containing pure magnesium is plunged into a body of molten iron in the ladle under surrounding atmospheric pressure, comprising,

providing a magnesium charge in the form of a plurality of shaped solid pieces of pure magnesium,

providing an open topped capsule and a solid plunging rod removably mounted thereto and closing the top in which one side opening is a single upper filling passage of a size to receive the individual pieces one by one and to permit controlled entry of molten metal but to prevent escape of said pieces and a floor to receive the solid pieces and provided with a lower passage of a size effective of bar escape of the solid pieces and to allow entry of molten metal and escape of reaction products and drainage of molten metal,

providing a vertically elongated open topped ladle,

filling the ladle with a body of molten iron having a volume several times that of the capsule to a level leaving an overlying space above the molten metal of a size to accommodate the capsule,

loading said plurality of pieces into the capsule through the upper filling passage one by one to fall on the floor forming a pile, with the capsule mounted on the plunging rod,

bringing the ladle and capsule together and lowering the capsule into the overlying space in the ladle,

after so placing the capsule, capping the ladle by seating a

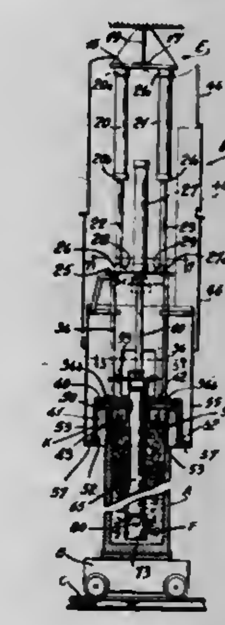

hood thereon, to limit the slopping of molten metal agitated by the reaction, and to allow the escape of gases from the top of the ladle,

lowering the plunging rod relative to the ladle and plunging the capsule into the body of molten iron thereby causing the molten iron to flow through the openings into contact with the pile of magnesium pieces to produce a volatile reaction forcing reaction products to pass outward through the openings into the body of molten iron,

controlling the escape of solid reaction products,

conducting away escaping gases,

uncapping the ladle and withdrawing the capsule from the molten iron and draining it of molten metal,

and recovering the treated molten iron from the ladle.

4,299,625

NIOBIUM-BASE ALLOY

David J. Michel, Alexandria, Va., and Hugh H. Smith, Temple Hills, Md., assignors to The United States of America as represented by the Secretary of the Navy, Washington, D.C.

Continuation of Ser. No. 945,719, Sep. 25, 1978, abandoned. This application Aug. 12, 1980, Ser. No. 177,320

Int. Cl.³ C22C *27/02*

U.S. Cl. 75—174 **8 Claims**

1. A high temperature and high neutron flux resistant alloy consisting essentially of:

an amount of zirconium at least sufficient to solid solution strengthen the alloy, to getter oxygen, and to trap point defects, but which does not exceed the zirconium solubility limit in niobium, the amount of zirconium is from about 0.8 wt. percent to about 1.2 wt. percent;

an amount of molybdenum at least sufficient to solid-solution strengthen the alloy and to point trap defects, the amount of molybdenum is from about 3.0 to 7.0 weight percent, so as to provide an acceptable ductility limit;

at most 0.1 weight percent of any one, or any combination of the following metallic elements: iron, aluminum, silicon, magnesium, calcium, vanadium, copper, manganese, chromium, silver and tantalum; and

at most 0.03 weight percent of any one, or any combination of, the following nonmetallic elements: oxygen, nitrogen, hydrogen and carbon, the sum total of metallic and nonmetallic elements not exceeding 0.1 weight percent;
the remainder being niobium.

4,299,626
TITANIUM BASE ALLOY FOR SUPERPLASTIC FORMING
Neil E. Paton, Thousand Oaks, Calif., and James A. Hall, Boulder City, Nev., assignors to Rockwell International Corporation, El Segundo, Calif.
Filed Sep. 8, 1980, Ser. No. 185,086
Int. Cl.³ C22C *14/00*
U.S. Cl. 75—175.5 **2 Claims**

1. A titanium base alloy for superplastic forming consisting essentially of about 4.5 to 6.5% Al, 1.5 to 2.5% Fe, 3.5 to 4.5% V, and balance titanium with minor additives and impurities.
2. An improvement in a titanium base alloy having about 6% Al and 4% V, said improvement comprising:
about 2% of a beta-stabilizing element selected from the group consisting of Co, Fe, Cr, and Ni, whereby said titanium alloy has improved superplastic forming properties.

4,299,627
METHOD OF MANUFACTURING OXYGEN SENSING ELEMENT
Hiroshi Shinohara, Okazaki; Yasuhiro Otsuka, Toyota; Shinichi Matsumoto, Toyota; Toshinobu Furutani, Toyota, and Hiroshi Wakizaka, Toyota, all of Japan, assignors to Toyota Jidosha Kogyo Kabushiki Kaisha, Toyota, Japan
Filed Sep. 6, 1979, Ser. No. 72,822
Claims priority, application Japan, Sep. 11, 1978, 53-110605
Int. Cl.³ B22F *3/00, 7/00*
U.S. Cl. 75—206 **6 Claims**

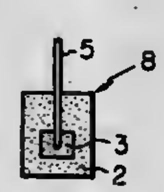

1. A method of manufacturing an oxygen sensing element having a structure such that an external conductive metal electrode or electrodes are mounted on the exterior surface of a solid electrolyte member having totally embedded therein a means for providing a reference partial pressure of oxygen, said reference oxygen partial pressure-providing means being composed of a sintered product of a finely divided metal or metal-metal oxide mixture and having a lead-out wire connected thereto; said method comprising the steps of:
(a) compression molding a part of the finely divided solid electrolyte material to form a provisional solid electrolyte member having a hole in which the reference oxygen partial pressure-providing means is to be formed;
(b) forming in said hole of the provisional solid electrolyte member a provisional product of the reference oxygen partial pressure-providing means from the finely divided metal or metal-metal oxide mixture, said finely divided metal or metal-metal oxide mixture having incorporated therein an anti-sintering material in an amount sufficient for making the thermal expansion or contraction of the reference oxygen partial pressure means substantially the same as that of the said electrolyte members;
(c) piling up the remaining part of the finely divided solid electrolyte material on the upper surface of the provisional reference oxygen partial pressure-providing means product and on the upper surface of the provisional solid electrolyte member, followed by compression molding the piled up solid electrolyte material to form an integrated structure comprising the solid electrolyte member having totally embedded therein the provisional reference oxygen partial pressure-providing means;
(d) sintering the integrated structure in non-oxidizing atmosphere at a temperature of from approximately 1,350° to 1,500° C., and;
(e) forming a layer or layers of the external conductive metal electrode or electrodes on at least a part of the exterior surface of the sintered integrated structure.

4,299,628
METAL POWDER COMPOSITION AND ARTICLE MADE THEREFROM
Michael Koehler, Wetter, and Wolfgang Petry, Bochum, both of Fed. Rep. of Germany, assignors to Bleistahl G.m.b.H., Wetter, Fed. Rep. of Germany
Division of Ser. No. 49,763, Jun. 18, 1979, Pat. No. 4,251,274. This application Sep. 22, 1980, Ser. No. 189,142
Claims priority, application Fed. Rep. of Germany, Jun. 29, 1978, 2828513
Int. Cl.³ B22F *5/00*
U.S. Cl. 75—230 **4 Claims**

1. An article of manufacture in powder metallurgy for an internal combustion engine supplied with lead-free fuel, said article being comprised of a compressed and sintered metal powder having the entire pore space filled with basalt.

4,299,629
METAL POWDER MIXTURES, SINTERED ARTICLE PRODUCED THEREFROM AND PROCESS FOR PRODUCING SAME
Ernest E. Haack, Muskegon, Mich., assignor to Goetze AG, Burscheid, Fed. Rep. of Germany
Filed Jun. 1, 1979, Ser. No. 44,408
Int. Cl.³ B22F *1/00*
U.S. Cl. 75—251 **14 Claims**

1. A metallic powder mixture for the production of highly densified sintered bodies which exhibit high resistance to wear, corrosion and alternating thermal stresses, which comprises 95 to 99.5% of a base alloy powder and 0.5 to 5% of an additive alloy powder comprising a nickel base alloy which contains from 0.1 to 4% boron and 0.1 to 6% silicon, said additive alloy having a melting point which is lower than the melting point of said base alloy such that when pressed and sintered at a temperature above the melting temperature of said additive alloy and below the melting temperature of said base alloy for about 20 to about 40 minutes, a sintered body is produced having a density of at least 95% of the theoretical density.

4,299,630
INFRARED ABSORPTIVE JET PRINTING INK
Ki-Sup Hwang, Fairborn, Ohio, assignor to The Mead Corporation, Dayton, Ohio
Filed Apr. 27, 1977, Ser. No. 791,380
Int. Cl.³ C09D *11/02, 11/08, 11/10*
U.S. Cl. 106—22 **13 Claims**

1. A jet printing ink which has high light absorptivity at infrared wave lengths and smear resistance after printing, is fast drying on paper and waterproof when dry comprising:
as the dye component, the thiosulfonic acid of 2, 4-dinitrophenol present in the ink in the range from about 3 percent to about 10 percent by weight,
polyethyleneimine in a molecular weight range from about 300 to about 10,000 as a binder for said dye and present in the ink in the range from about 0.9 percent to about 3.1 percent by weight, and
the balance water;
the formulation further containing a pH stabilizer selected from the group consisting of sodium carbonate, ammonium sulfide, tripolyphosphate, and sodium phosphate tribasic to maintain a pH greater than about 8.5 in order to improve the stability and shelf life of said formulation without adversely affecting the on-paper characteristics of the ink, said formulation also having a resistivity below about 1000 ohm cm and a viscosity of 1-10 cp at 25° C.

4,299,631
SILICON CARBIDE BODIES AND THEIR PRODUCTION
Peter Kennedy, Preston, and Bernard North, Chorley, both of England, assignors to United Kingdom Atomic Energy Authority, England
Filed Apr. 23, 1980, Ser. No. 142,999
Claims priority, application United Kingdom, Apr. 24, 1979, 14313/79; Apr. 24, 1979, 14315/79
Int. Cl.³ C04B *35/56*
U.S. Cl. 501—91 **8 Claims**

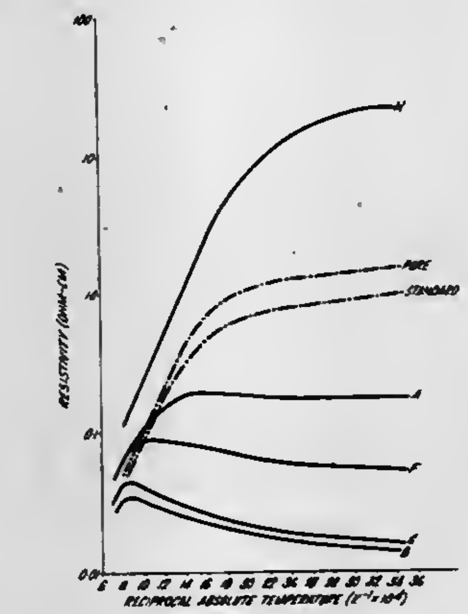

1. A silicon carbide body consisting essentially of a reaction-bonded silicon carbide body having a free silicon phase and in said free silicon phase at least one of the Group III elements boron and indium or at least one of the Group V elements antimony and tantalum in an amount sufficient to modify the electrical resistivity of the body.

4,299,632
CERAMIC MIXTURE
Naum Gosin, 55 W. 92 St., Apt. 5 "G", New York, N.Y. 10025
Filed Sep. 22, 1980, Ser. No. 189,368
Int. Cl.³ C04B *33/13*
U.S. Cl. 501—127 **7 Claims**

1. A ceramic mixture, consisting of (in % weight):
clay—1-64;
ore selected from the group consisting of iron ore and manganese ore—30-98; and
at least one metal oxide selected from the group consisting of black cobalt oxide, nickel oxide, chromium oxide and manganese oxide 0.1-12.

4,299,633
METHOD OF PREPARING GREEN COMPOSITIONS CONTAINING A HYDRAULIC SUBSTANCE AND METHOD OF UTILIZING THE SAME
Yasuro Ito, 38-16, Numabukoro 4-chome, Nakano-ku, Tokyo, Japan; Yoshiro Higuchi, Tokyo, Japan; Yutaka Mochida; Sampei Kemmochi, both of Hakodate, Japan; Hideharu Kaga, Tokyo, Japan, and Yasuhiro Yamamoto, Fujisawa, Japan, assignors to Yasuro Ito and Taisei Corporation, both of Tokyo, Japan
Filed Feb. 7, 1980, Ser. No. 119,562
Claims priority, application Japan, Feb. 7, 1979, 54/12164
Int. Cl.³ C04B *7/02*
U.S. Cl. 106—97 **22 Claims**

1. A method of preparing a green composition having a pre-determined ratio of water to a powder of hydraulic substance wherein the hydraulic substance is admixed with water and a fine aggregate, said method comprising the steps of preparing particles of said fine aggregate in which water is uniformly deposited on the entire surface thereof so as to exclude air voids, by adding a primary water to said particles in an amount necessary to optimize the percentage of the surface water on said particles, incorporating a powder of said hydraulic substance with said particles thus absorbing said powder of hydraulic substance with the surface of said particles to form shells about said particles, said shells having a smaller ratio of water to powder than said pre-determined ratio of said green composition, adding a secondary water to the shelled particles in an amount providing the remaining portion of the necessary water and kneading the resulting mixture.

4,299,634
PROCESS FOR THE PREPARATION OF RAW MIX FOR THE PRODUCTION OF CEMENT AND SULPHURIC ACID
Josef Hutter, Dornach, and Heinz Göller, Linz, both of Austria, assignors to Chemie Linz Aktiengesellschaft, Austria
Filed Oct. 21, 1980, Ser. No. 199,219
Claims priority, application Fed. Rep. of Germany, Oct. 26, 1979, 2943429
Int. Cl.³ C04B *7/04*
U.S. Cl. 106—103 **10 Claims**

1. In a process for the preparation of a raw mix suitable for use in the production of cement and sulphuric acid by the cement-sulphuric acid process the improvement comprising comminuting coke to a degree that at most 10% by weight of the coke has a particle size of less than 0.1 mm and at least 90% by weight has a particle size of less than 20 mm, with the proviso that at least 60% by weight has a particle size greater than 0.2 mm, after which the thus comminuted coke is mixed with a mixture, of fine particle size, comprising calcium sulphate and the remaining additives.

4,299,635
FLOW CHARACTERISTICS OF SYNTHETIC IRON OXIDE
Theodore Dickerson, 106 Curve Dr., Monroe, La. 71203
Filed Mar. 23, 1979, Ser. No. 23,480
Int. Cl.³ C09C *1/24, 3/06*
U.S. Cl. 106—308 B **7 Claims**

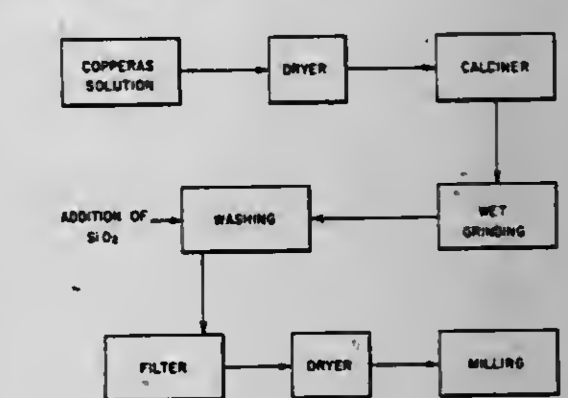

1. A method for improving the flow characteristics of synthetic iron oxide prepared from soluble iron salts, comprising the steps of
(a) calcining copperas, to give a crude roasted copperas red product,
(b) grinding the crude roasted red product,
(c) washing the ground crude product,
(d) adding a silicon-containing material selected from the group consisting of fumed silica, precipitated silica, and $Me_xSi_yO_z$ to the washed product, in an amount sufficient to give a range of about 0.5-10 wt.% SiO_2 in the finished iron oxide product,
(e) filtering and drying the product of step (d), and

(f) milling the dried product to reduce the agglomerated particles formed in step (e).

4,299,636
ALKOXY SUBSTITUTED AROMATIC STABILIZERS FOR CROSSLINKED CMDB PROPELLANT
Kenneth O. Hartman, LaVale, Md., and James W. Morton, Ridgeley, W. Va., assignors to Hercules Incorporated, Wilmington, Del.
Filed Apr. 5, 1974, Ser. No. 458,383
Int. Cl.³ C06B *45/10*
U.S. Cl. 149—19.4 **8 Claims**

1. In a diisocyanate crosslinked composite modified double base propellant containing a thermal stabilizer, the improvement comprising a thermal stabilizer comprising at least one alkoxy substituted aromatic compound having the formula

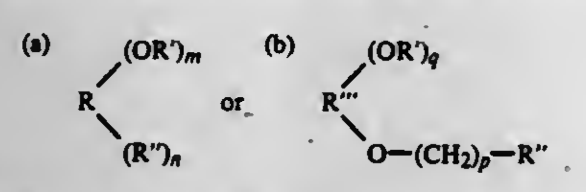

wherein R is a benzene, biphenyl or naphthalene nucleus,
R' is an alkyl radical having from 1 to 4 carbon atoms,
R'' is phenoxy or alkoxy substituted phenoxy in which the alkoxy substituent has from 1 to 4 carbon atoms,
R''' is a benzene nucleus, and
m is 1–3,
n is 0–1,
p is 1–6, and
q is 1–2,
said compound being employed in an amount of from about 0.2% to about 1.5% by weight, based on the weight of the propellant composition.

4,299,637
METHOD OF MAKING A GAME TICKET
Martin K. Oberdeck, Jacksonville, Fla., and John R. Koza, 2575 Peachtree Rd. NE., #24C, Atlanta, Ga. 30305, assignors to John R. Koza, Atlanta, Ga.
Filed Jan. 14, 1978, Ser. No. 915,382
Int. Cl.³ B32B *31/12;* B42D *15/00*
U.S. Cl. 156—64 **18 Claims**

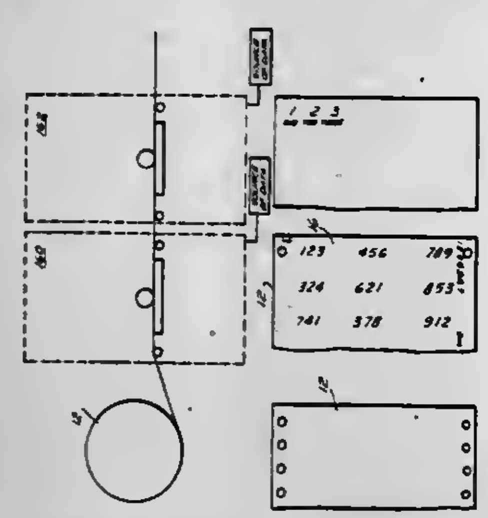

1. The method of making game tickets and the like comprising the steps of depositing a release coating over predetermined areas of previously printed information on a base sheet; thereafter depositing over said release coated areas of the base sheet an opaque coating material to conceal the information printed in said areas; and thereafter adhering a non-transparent cover sheet to said base sheet along predetermined areas surrounding said predetermined areas of printed information; and perforating said adhered cover and base sheets through said areas at which they are adhered to permit the composite sheet to be severed into individual tickets which are peripherally sealed by the adhered cover and base sheets; inspecting the base sheet before said cover sheet is adhered thereto, to determine whether said base sheet and the material thereon are properly formed and printed to produce game tickets; and after said cover sheet is adhered to said base sheet, printing ticket validation information on the base sheet for those areas of the sheet determined in said inspection step to be properly formed or printed.

4,299,638
METHOD OF BONDING SILICON CERAMIC MEMBERS
Tadaaki Matsuhisa, Nagoya, Japan, assignor to NGK Insulators, Ltd., Nagoya, Japan
Filed Feb. 19, 1980, Ser. No. 122,679
Claims priority, application Japan, Feb. 28, 1979, 54-21833
Int. Cl.³ B32B *31/26;* C04B *39/00*
U.S. Cl. 156—85 **1 Claim**

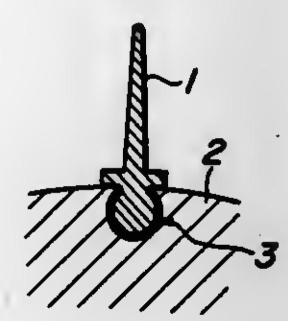

1. A method of bonding at least two silicon ceramic members with each other, comprising fitting a first silicon ceramic member into a second silicon ceramic member through a layer of powder, paste or slurry of metallic silicon, silicon nitride or silicon carbide interposed between both the members at the interface to form an assembly, the first silicon ceramic member having a firing shrinkage lower than that of the second silicon ceramic member, and firing the assembly so as to bond firmly the first and second silicon ceramic members into one integral body.

4,299,639
METHOD FOR THE PRODUCTION OF LAMINATES WITH SPACED-APART GLASS PANES
Franz Bayer, Elzach, Fed. Rep. of Germany, assignor to Franz Xaver Bayer Isolierglasfabrik KG, Elzach, Fed. Rep. of Germany
Filed Aug. 8, 1977, Ser. No. 822,901
Claims priority, application Fed. Rep. of Germany, Aug. 7, 1976, 2635641; Jun. 25, 1977, 2728762
Int. Cl.³ B32B *31/06, 17/10*
U.S. Cl. 156—104 **34 Claims**

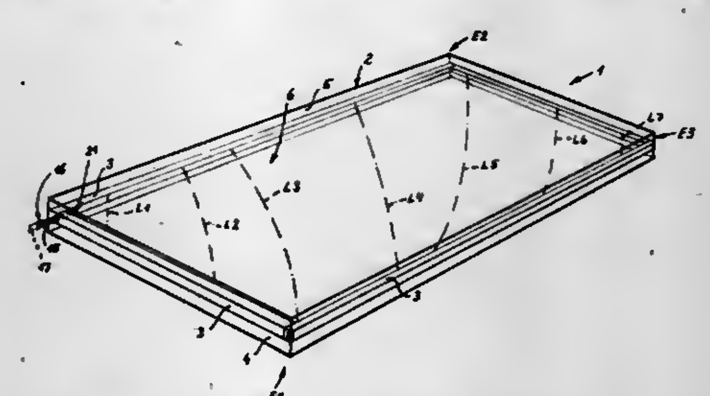

1. A method of producing a laminate wherein a layer of light-transmitting synthetic plastic material is sandwiched between two glass panes, particularly a plastic material which enhances the soundproofing qualities of laminate, comprising the steps of locating a first glass pane in a substantially horizontal plane; moving a second pane to a position of substantial parallelism with and above the first pane; maintaining a second pane at a predetermined distance from the first pane so that the panes define a flat space of substantially constant height and sealingly securing the panes to each other all the way around said space, including inserting a seal between the marginal portions of the panes; establishing in the seal a first path for admission into said space, at least at one first location between the panes, of liquefied plastic material which shrinks in response to setting; admitting into said space such quantity of liquefied plastic material that, after setting, the plastic material completely fills said space and prevents inward bulging of the panes; raising the pressure against the upper side of the second pane during and after admission of plastic material to prevent outward bulging of the second pane as a result of admission of plastic material, including drawing air from said space by suction at at least one second location which is disposed between said panes and is remote from said first location; and causing the plastic material in said space to set.

4,299,640
RUBBER-BRASS ADHESION IMPROVED THROUGH TREATMENT OF THE METAL WITH AMINO CARBOXYLIC ACID OR SALT THEREOF
David E. Erickson, Stow, Ohio, assignor to The General Tire & Rubber Company, Akron, Ohio
Filed Jul. 25, 1980, Ser. No. 172,322
Int. Cl.³ B29H *9/08;* B32B *15/02, 15/06*
U.S. Cl. 156—110 C **20 Claims**

1. The method which comprises dipping brass plated steel cord in an aqueous solution consisting essentially of from about 0.5 to 6% by weight of an amino carboxylic acid having from 2 to 24 carbon atoms, from 1 to 4 nitrogen atoms and from 1 to 6 carboxylic acid groups and their corresponding ammonium, lithium, sodium and potassium salts and salt hydrates and mixtures of the same for a time and at a temperature sufficient to remove at least an appreciable amount of the corrosion products on the outer surface layers of said cord and drying the same.

6. The method according to claim 1 containing the additional step of combining said dried cord with a vulcanizable rubber compound and vulcanizing the same.

16. The product produced by the method of claim 6.

4,299,641
METHOD OF MAKING TWO PLY DUCT CORE
Walter F. Kelly, Canton, Conn., assignor to The Wiremold Company, West Hartford, Conn.
Division of Ser. No. 900,764, Apr. 27, 1978, Pat. No. 4,204,562. This application Oct. 17, 1979, Ser. No. 85,804
Int. Cl.³ B65H *81/00*
U.S. Cl. 156—143 **9 Claims**

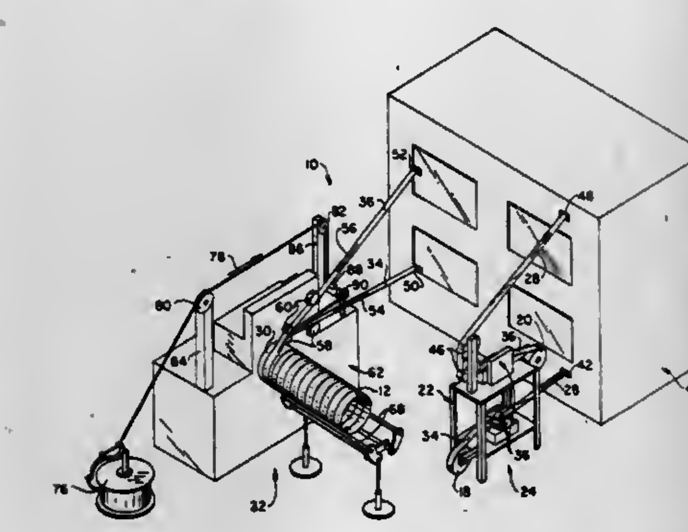

1. A method of making collapsible tubing comprising the steps of helically winding a first strip of flexible sheet material into continuous lapping wraps defining a generally tubular duct, training a length of a resilient forming member onto the outside surface of the strip in helical wraps along the outside lapping surfaces of the first strip, helically winding and securing onto the first strip a second strip of flexible sheet material in continuous lapping wraps with the inside surface of the second strip covering the outside surface of the first strip with the forming member encased in fixed relation between the first and second strips.

4,299,642
TAIL SEALING APPARATUS
Warren E. Berkholtz, Stockton, Calif., assignor to Nelson R. Stauffer, Factoryville, Pa.
Filed Aug. 1, 1980, Ser. No. 174,612
Int. Cl.³ B65C *3/12*
U.S. Cl. 156—191 **19 Claims**

1. An apparatus for sealing the tail of a roll product, comprising a supporting structure defining a tail separating station and a separate tail wind-up station, said supporting structure including a pair of generally parallel rollers that define said tail separating station and said tail wind-up station, said stations being disposed longitudinally of said rollers, means for rotating a roll about its axis at the tail separating station, tail separating means disposed at the tail separating station for separating the tail from the body of the roll as the roll is rotated, an apron disposed laterally of the tail separating station to support the separated tail, conveying means for moving the roll with the separated tail from the tail separating station to the wind-up station, fixed adhesive supply means mounted at a level above the apron for applying an adhesive to the separated tail as the roll is moved from the tail separating station to the wind-up station, and means for rotating the roll at the wind-up station and re-winding the tail onto the body of the roll.

4,299,643
METHOD OF MAKING A HINGED DISPLAY MOUNT
Carroll N. Cross, Rte. 2, Box 741, Maitland, Fla. 32751
Filed Aug. 8, 1980, Ser. No. 176,265
Int. Cl.³ B31F *23/10;* G09F *3/18;* G09D *3/04;* B21D *5/14*
U.S. Cl. 156—223 **7 Claims**

1. A method of making a casebound hinged display mount comprising the steps of:
- securing a thin ductile material along inwardly disposed substantially parallel edges of a pair of panels to form a pair of hinged panels; and
- shaping the ductile strip of material secured to said pair of panels between the parallel edges of said pair of panels to produce a predetermined bend parallel to one said inwardly disposed parallel edge of the panel, said shaping of said thin ductile strip of material including passing the ductile strip of material attached to the pair of panels between a pair of spaced coacting dies, one die having a

convex cross-section and the other die having a concave cross-section, whereby said hinged area can be identified

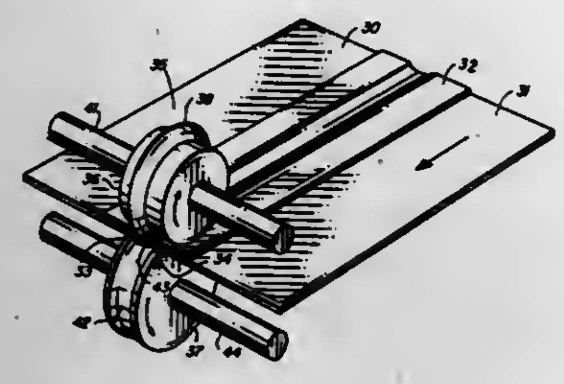

for subsequent folding of said hinged panels along said hinge between said parallel edges of said hinged panels.

4,299,644
HEAT TRANSFER DECAL
Raymond M. Arnold, West Chester, Pa., assignor to Advanced Graphic Technology, Chicago, Ill.
Filed Sep. 6, 1979, Ser. No. 73,554
Int. Cl.³ B44C *1/24*
U.S. Cl. 156—230 **7 Claims**

1. A method for manufacture of heat transfer decals comprising the steps of:

(a) providing a release coated carrier film from the group consisting of polypropylene coated paper, cured melamine coated paper, epoxy coated paper and polyester film; and

(b) printing on said film by means of flexographic methods with at least one ink from a group of inks having the following formulation:

Pigment or dye: 1-30% by weight
Alcohol solution acrylic resin: 3-12% by weight
Cellulose acetate butyrate: 0.5-5% by weight
Dispersion agents: 0.0-2% by weight
Ethanol: 25-50% by weight
Butyl cellosolve: 5-12% by weight
4 Methoxy-4 Methyl, Pentanone-2: 0.0-3% by weight
2-Nitro propane: 10-25% by weight
N-propyl acetate: 5-15% by weight
Polymeric plasticiser: 1-5% by weight.

4,299,645
METHOD FOR ASSEMBLING FABRIC TO AN ARTICLE OF FURNITURE
Charles R. Newsom, 6208 Rocky Falls Rd., Charlotte, N.C. 28211
Filed May 30, 1980, Ser. No. 154,539
Int. Cl.³ B32B *31/04*
U.S. Cl. 156—258 **10 Claims**

1. A method for assembling a fabric material, such as woven cane, in a continuous channel in an article of furniture, and so as to cover the area encompassed by the channel, and characterized by the absence of a manual trimming operation, and comprising the steps of

cutting the fabric material into a component having a peripheral edge which accurately conforms in a predetermined oversized relationship to the peripheral outline of the channel in the article of furniture and so that the component is adapted to overlie the area encompassed by the channel with the entire extent of the peripheral edge of the component being disposed within the channel,

applying indicium at at least two widely spaced positions on the component, with said positions being respectively disposed to indicate predetermined locations with respect to the peripheral outline of the associated channel in the article of furniture,

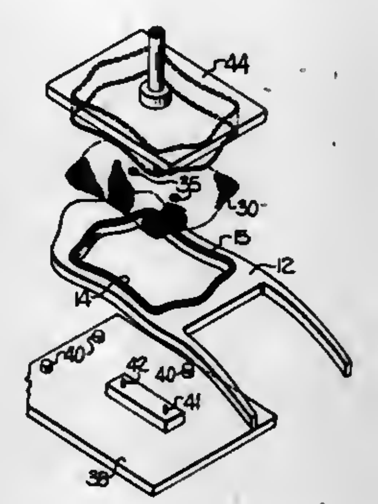

placing the component with the indicia applied thereto so as to overlie the area encompassed by the channel in the article of furniture, while orienting the indicia on the component at said predetermined locations with respect to the peripheral outline of the channel, and then

forcing the peripheral edge of the component into the channel, and whereby the entire extent of the peripheral edge of the component is disposed within the channel.

4,299,646
MANUFACTURE OF AIR OXYGEN ELECTRODES
Hans Sauer, Idstein-Walsdorf, and Wolfgang Kloss, Ellwangen, both of Fed. Rep. of Germany, assignors to Varta Batterie Aktiengesellschaft, Hanover, Fed. Rep. of Germany
Filed Mar. 5, 1979, Ser. No. 17,470
Claims priority, application Fed. Rep. of Germany, Mar. 20, 1978, 2812040
Int. Cl.³ B32B *31/00;* **C08J** *5/02*
U.S. Cl. 156—278 **12 Claims**

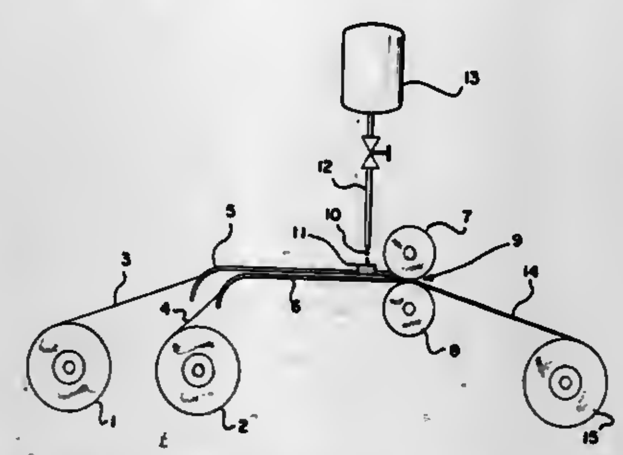

1. A method of manufacturing an air oxygen electrode which comprises a porous polytetrafluorethylene foil and a catalyst layer which is attached to the foil and which contains essentially activated carbon, said method comprising uniting the polytetrafluorethylene foil with the catalyst layer between rollers, the pores of the polytetrafluorethylene foil containing, at least while between the rollers, a wetting, easily volatilizable liquid, and volatilizing the liquid from the pores of the foil after passage between the rollers.

4,299,647
TIRE RETREADING APPARATUS
William M. DeHaven, Randolph County, N.C., assignor to Harrelson Rubber Company, Asheboro, N.C.
Filed Mar. 26, 1980, Ser. No. 134,027
Int. Cl.³ B29H *17/36*
U.S. Cl. 156—394 FM **12 Claims**

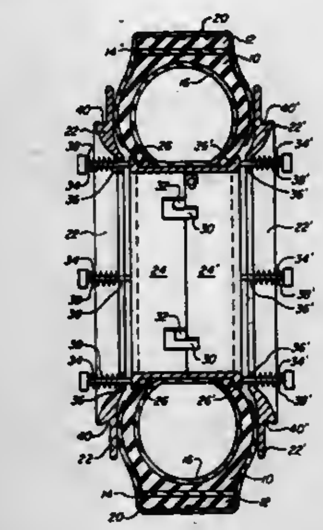

1. Tire retreading apparatus for use in the moldless chamber-treatment retreading of a tire encircled by a replacement tread strip and by the overlying medial portion of a flexible envelope having opposite marginal edge portions overlying and adapted to be sealingly secured adjacent opposite sidewalls of said tire carcass; said apparatus comprising:

generally cylindrical rim means for mounting said tire, said rim means extending through and coaxially of the center opening of said tire and having radially projecting flanges at its opposite ends overlying the bead areas of said tire;

a pair of annular envelope-sealing members each having a radially inward portion overlying a respective one of said flanges of said rim means, and each having a radially outward portion overlying a respective one of said opposite sidewalls of said tire and sealingly engaging the theredisposed one of said envelope marginal edge portions;

mounting means mounting said annular members upon and in permanent axially aligned relationship with said rim means for independent axial movement of each of said members toward and away from the adjacent one of said flanges of said rim means;

and resilient biasing means associated with said mounting means for independently biasing each of said annular members axially inwardly toward the thereto adjacent one of said flanges of said rim means and toward the thereto adjacent one of said sidewalls of said tire, while permitting constrained movement of each of said annular members axially outwardly to compensate for variations in the sidewall width dimensions of said tire.

4,299,648
METHOD AND APPARATUS FOR DRAWING MONOCRYSTALLINE RIBBON FROM A MELT
Theodore F. Ciszek, Evergreen, Colo., and Guenter H. Schwuttke, Poughkeepsie, N.Y., assignors to The United States of America as represented by the United States Department of Energy, Washington, D.C.
Filed Aug. 20, 1980, Ser. No. 179,919
Int. Cl.³ C30B *15/34*
U.S. Cl. 156—608 **16 Claims**

1. Apparatus for growing at least one ribbon of monocrystalline material from a melt by use of at least one seed ribbon comprising:

a. a container for the melt material,

b. a shaping die including at least two elements spaced one from the other with each element having one portion thereof located below the level of the melt in the container and a second portion located above the level of the melt a height at least sufficient to form a raised meniscus of melt about the corresponding element, said elements being spaced one from the other a distance sufficient to provide

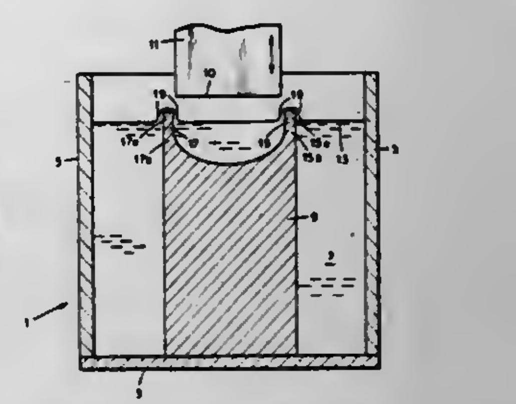

an area between said elements into which said seed ribbon can be placed to contact said melt and which distance determines the width of the grown ribbon.

4,299,649
VAPOR TRANSPORT PROCESS FOR GROWING SELECTED COMPOUND SEMICONDUCTORS OF HIGH PURITY
Anthony L. Gentile, Thousand Oaks; John L. Bowers, Pacific Palisades, and Oscar M. Stafsudd, Los Angeles, all of Calif., assignors to Hughes Aircraft Company, Culver City, Calif. Continuation of Ser. No. 877,927, Feb. 15, 1978, abandoned, which is a continuation of Ser. No. 734,925, Oct. 22, 1976, abandoned. This application Nov. 8, 1979, Ser. No. 92,607
Int. Cl.³ C30B *25/02*
U.S. Cl. 156—610 **6 Claims**

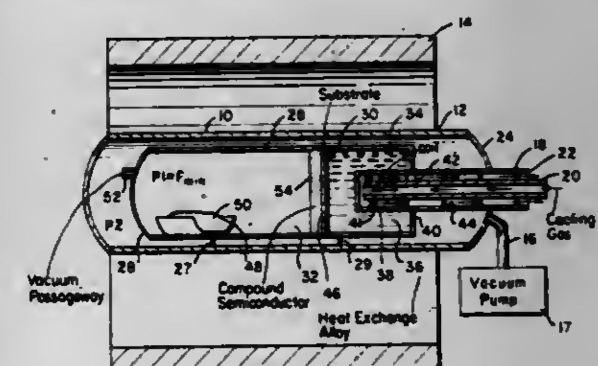

1. A process for rapidly growing a selected II-VI compound semiconductor material of high purity including the steps of:

(a) Providing a selected II-VI semiconductor source material at a first location within a crystal growth chamber;

(b) providing a crystal growth support member at a second location within said chamber;

(c) establishing a predetermined temperature profile within said chamber and between said first and second locations so that said support member is lower in temperature than said source material by a predetermined amount; and

(d) creating a dynamic vacuum within said chamber suitable for causing dissociation of elemental gases from said source material and for establishing a predetermined minimum overpressure, P_{min}, at said source material which is substantially equivalent to the minimum tool pressure in said chamber required to allow the elemental composition of gases leaving said source material and flowing toward said support member to be substantially equal to the chemical composition of the elements of the semiconductor solid comprising said source material, whereby impurities within said chamber having a higher vapor pressure than P_{min} will be removed therefrom under said dynamic vacuum while said gases are recombined in the solid form at said crystal growth support member.

4,299,650

MINIMIZATION OF STRAIN IN SINGLE CRYSTALS

William A. Bonner, Warren, N.J., assignor to Bell Telephone Laboratories, Incorporated, Murray Hill, N.Y.

Filed Oct. 12, 1979, Ser. No. 84,070

Int. Cl.³ C30B *27/02*

U.S. Cl. 156—617 SP **6 Claims**

1. Method for making a single crystal boule of a material which consists essentially of doped or undoped indium phosphide, said method comprising the steps of

(1) heating to produce a liquid body of said material which is provided with an overlying liquid encapsulating layer,

(2) providing over said liquid encapsulating layer an atmosphere,

(3) pulling said boule from said liquid body through said liquid encapsulating layer while said atmosphere is at a first pressure which is greater than or equal to a critical pressure, said critical pressure being defined as the lowest pressure sufficient to essentially prevent dissociation of said constituents,

(4) reducing pressure of said atmosphere from said first pressure to a second pressure which is less than or equal to 50 percent of said critical pressure while temperature of said boule is greater than or equal to 90 percent of the average temperature of said boule upon completion of growth of said boule, and

(5) cooling said boule to ambient temperature.

4,299,651

PRODUCTION OF SINGLE CRYSTAL II-V MATERIAL

William A. Bonner, Warren, N.J., assignor to Bell Telephone Laboratories, Incorporated, Murray Hill, N.J.

Continuation of Ser. No. 47,214, Jun. 11, 1979, abandoned. This application Nov. 6, 1980, Ser. No. 204,525

Int. Cl.³ C30B *15/04, 15/22, 29/44*

U.S. Cl. 156—617 SP **4 Claims**

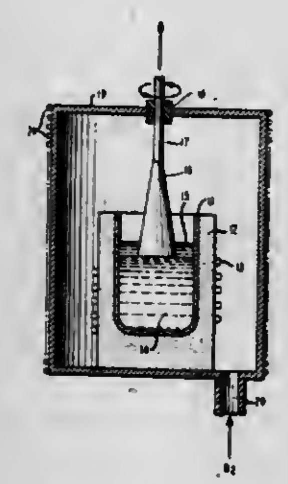

1. Method for making a twin-free single crystal boule of a doped or undoped III–V material, said method comprising the steps of providing a melt of said material, contacting the surface of said melt with a group V element plane of a seed crystal having (111) direction aligned essentially vertical, and vertically pulling said boule from said melt, pulling being under conditions under which an essentially flat interface is maintained between the surface of said melt and a surface of said boule, and pulling further being at a pull rate which is selected so as to limit ratio of enlargement of diameter of contact area between said boule and said melt versus increase in length of said boule to values not exceeding a value of 0.3577, whereby said single crystal boule is made twin-free.

4,299,652

PROCESS FOR RECOVERY OF PULP MILL CHEMICALS

Kouji Masuno; Junji Nakayama, both of Yokohama; Yukio Mizoguchi, Tokyo, and Mitsuyoshi Kaneko, Machida, all of Japan, assignors to Ebara Corporation, Tokyo, Japan

Continuation of Ser. No. 929,502, Jul. 31, 1978, abandoned. This application Mar. 5, 1980, Ser. No. 127,889

Int. Cl.³ D21C *11/04, 11/08, 11/12*

U.S. Cl. 162—30 K **10 Claims**

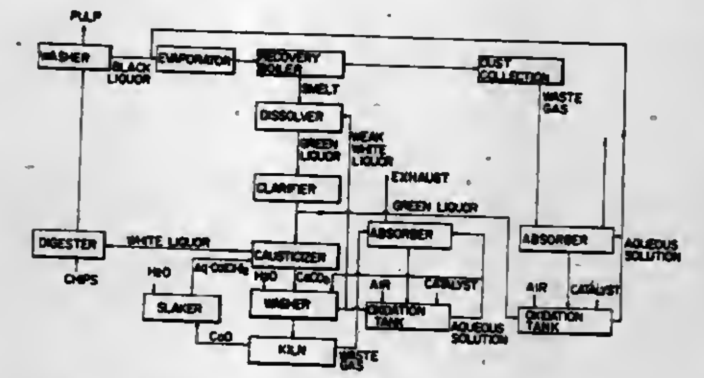

1. In a method for regenerating and recovering pulp mill chemicals which comprises feeding black liquor to a recovery and regeneration operation including a recovery boiler, smelt dissolver for forming green liquor, and causticizer for converting the green liquor into white liquor containing sodium hydroxide and sodium sulfide useful for cooking wood chips, preparing an oxidized liquor by contacting an aqueous alkaline pulp mill liquor selected from the group consisting of green liquor, white liquor and weak white liquor with a gas containing molecular oxygen and absorbing waste gases containing sulfur compounds, carbon dioxide and dust in said oxidized liquor, the improvement comprising (a) contacting said aqueous alkaline pulp mill liquor with said gas containing molecular oxygen while maintaining said aqueous alkaline pulp liquor at a pH of 8.3 to 9.0, a temperature of 20° to 95° C. and a sodium ion concentration, derived from sodium carbonate and sodium bicarbonate in said aqueous alkaline pulp mill liquor, of from 0.1 to 1.0 moles/l, in the presence of from 10 to 100 mg/l of a catalyst consisting of at least one water-soluble iron salt, (b) absorbing the sulfur compounds including hydrogen sulfide and sulfur dioxide, and dust in said waste gases with said oxidized liquor containing said water soluble catalyst without substantial absorption of carbon dioxide in said oxidized liquor while the pH of said oxidized liquor is maintained between 8.3 and 9.0, (c) recirculating a portion of the oxidized liquor from step (a) to the black liquor, while (d) recirculating the liquor from the gas absorption step (b) to the oxidation step (a).

4,299,653

METHOD OF BLEACHING PULP WITH AN AQUEOUS SOLUTION OF CHLORINE DIOXIDE AND CHLORINE FOLLOWED BY A CHLORINE SOLUTION

Douglas W. Reeve, Orton, Canada, assignor to ERCO Industries Limited, Islington, Canada

Continuation-in-part of Ser. No. 30,557, Apr. 16, 1979, abandoned. This application Nov. 29, 1979, Ser. No. 98,524

Int. Cl.³ C01B *11/02;* **D21C** *9/14*

U.S. Cl. 162—88 **8 Claims**

1. A method of bleaching pulp using chlorine dioxide, which comprises:

(a) continuously forming a gaseous mixture of chlorine dioxide, chlorine and steam by:

(i) continuously feeding a sodium chlorate solution to an aqueous acid reaction medium present in a unilocular reaction zone,

(ii) continuously feeding sulphuric acid to said aqueous reaction medium in an amount to maintain the total acid normality of the reaction medium in the range of about 2 to about 4.8 normal,

(iii) continuously feeding sodium chloride, hydrochloric

acid or a mixture of sodium chloride and hydrochloric acid to said aqueous reaction medium,

(iv) continuously maintaining said reaction medium at a temperature of about 55° to about 85° C. while maintaining said reaction zone under a subatmospheric pressure of about 80 to about 300 mm Hg to cause the formation of chlorine dioxide and chlorine and the evaporation of water from the reaction medium,

(v) continuously depositing anhydrous neutral sodium sulphate from the reaction medium in said reaction medium in said reaction zone once the reaction medium becomes saturated thereby after start up, and

(vi) continuously removing the gaseous mixture of chlorine dioxide, chlorine and steam from the reaction zone;

(b) continuously cooling said gaseous stream to a temperature of about 15° to about 55° C. to cause condensation of at least a substantial proportion of the steam therefrom to provide a chlorine dioxide- and chlorine-containing gas stream;

(c) continuously contacting the latter gas stream with water having a temperature of about 3° to about 10° C. at a flow rate sufficient to form an aqueous solution of chlorine

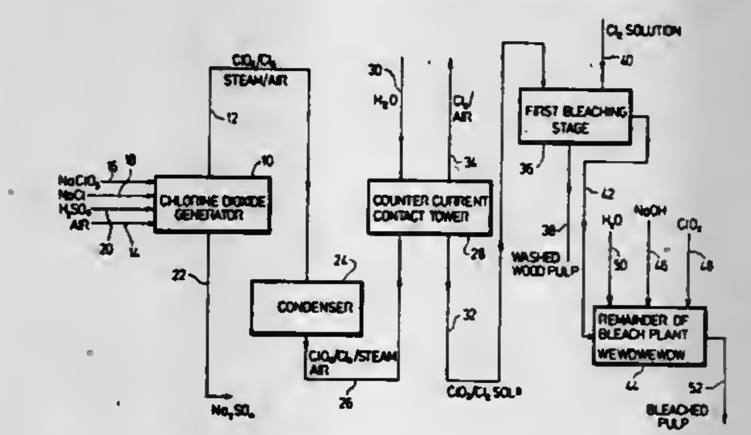

dioxide and chlorine containing about 8 to about 9 grams per liter of chlorine dioxide and about 1.5 to about 1.8 grams per liter of chlorine, and a gaseous chlorine stream; and

(d) bleaching a cellulosic fibrous material pulp for about 10 to about 60 minutes at a temperature of about 35° to about 70° C. in aqueous suspension having a consistency of about 2 to about 16% by weight of pulp and containing no more dissolved organic material than about 2% by weight TOC on pulp at an overall equivalent chlorine concentration of about 2 to about 10% by weight of the pulp, by:

(i) subjecting said suspension to a first bleaching step at an acid pH value using at least part of said aqueous solution of chlorine dioxide and chlorine formed in step (c), and

(ii) without an intermediate washing step, subjecting the suspension to a second bleaching step at an acid pH using a chlorine solution and commencing about 5 seconds to about 10 minutes after commencement of said first bleaching step,

the chlorine dioxide in said aqueous solution of chlorine dioxide and chlorine constituting about 20 to about 90% of the total available chlorine used in said first and second bleaching steps.

4,299,654

PROCESS FOR PRODUCING SIZED PAPER AND CARDBOARD WITH POLYELECTROLYTES AND EPOXIDE-AMINE-POLYAMIDE REACTION PRODUCTS

Hugo Tiach, Basel; Klaus-Dieter Leifels, Binningen, and Werner Mischler, Burg, all of Switzerland, assignors to Ciba-Geigy Corporation, Ardsley, N.Y.

Continuation of Ser. No. 933,689, Aug. 15, 1978, abandoned. This application Dec. 31, 1979, Ser. No. 108,610

Claims priority, application Switzerland, Aug. 26, 1977, 10455/77

Int. Cl.³ D21H *3/58*

U.S. Cl. 162—164 EP **8 Claims**

1. A process for producing paper or cardboard, sized in the pulp, on a paper machine, with an epoxide-amine-polyamide reaction product, comprising the steps of adding to the pulp fiber suspension, which has a pH value of 5 to 8,

(A) a water-soluble high molecular weight polyelectrolyte, which is cationic if the pH value of the fiber suspension is 6.5 to 8 and anionic if the pH value of the fiber suspension is 5 to 7, followed by

(B) A water-soluble or water-dispersible salt of an epoxide-amine-polyamide reaction product;

wherein the cationic polyelectrolyte is selected from the group consisting of a cationically modified starch; cationically modified carbohydrates from guar flour or locust bean flour having molecular weights of 250,000 to 350,000; a cationally modified alginic acid having a degree of polymerization of 800 to 1200; a condensation product from dicyandiamide or cyanamide, formaldehyde and an ammonium halide; a cationic polyacrylic amide; an epichlorohydrin adduct of a reaction product from a polyalkylenepolyamine and an aliphatic dicarboxylic acid; an epichlorohydrin adduct of a reaction product from a polyalkylenepolyamine and dicyandiamide or cyanamide; and an epichlorohydrin adduct of a reaction product from a polyalkylenepolyamine, dicyandiamide or cyanamide, and an aliphatic dicarboxylic acid which is unesterified or esterified with alkanols;

wherein the anionic polyelectrolyte is selected from the group consisting of a dimerized condensation product from a naphthalenesulphonic acid and formaldehyde; a copolymer from acrylic acid and acrylic amide; or an alkali metal salt or ammonium salt of alginic acid, having a degree of polymerization of 800 to 1200;

wherein component (B) is a salt of the reaction product from

(a) 1.0 epoxide group equivalent of a polyglycidyl ether of 2,2-bis(4'-hydroxyphenyl)-propane,

(b) 0.4 to 0.6 amino group equivalent of a mono-fatty amine having 16 to 18 carbon atoms, and

(c) 0.3 to 0.5 amino group equivalent of a polyalkeneaminopolyamide from

(c') polymerised linoleic or linolenic acid, and

(c") diethylenetriamine, triethylenetetramine or tetraethylenepentamine,

in the form of an aqueous preparation having a solids content of 25 to 35 percent by weight and a pH value of 4 to 5;

wherein component (A) is added in an amount which is 0.01 to 1 percent by weight, relative to the dry-fiber content of the fiber suspension;

wherein component (B) is added in an amount which is 0.1 to 3 percent by weight, relative to the dry-fiber content of the fiber suspension;

and wherein component (A) is added 8 to 80 seconds before the fiber suspension reaches the breastbox of the paper machine, and component (B) 3 to 50 seconds before the fiber suspension reaches the breastbox, however at least 5 seconds after the addition of component (A).

4,299,655

FOAM GENERATOR FOR PAPERMAKING MACHINE

Borgeir Skaugen, Beloit, Wis., assignor to Beloit Corporation, Beloit, Wis.

Continuation of Ser. No. 886,277, Mar. 13, 1978, abandoned. This application May 5, 1980, Ser. No. 146,677

Int. Cl.³ D21F *1/06*

U.S. Cl. 162—343 **10 Claims**

8. A dispersing and mixing unit for a paper making machine in a mechanism for forming a fibrous web by depositing fibers out of a liquid foam suspension comprising in combination:

means defining a flow path including an upstream conduit for conducting a delivered foam liquid;

a pressure pump for driving the foam liquid through said flow path;

a headbox with a slice chamber with a slice opening;

a movable forming surface positioned to receive the foam

liquid from the slice opening with a fibrous web forming on the forming surface;
a dispersing and mixing chamber positioned in the flow path receiving liquid from the upstream conduit and connected to deliver the liquid to the headbox including a plug positioned in said mixing chamber defining a flow path between the chamber wall and plug which path forms a venturi with a venturi constriction and a venturi expan-

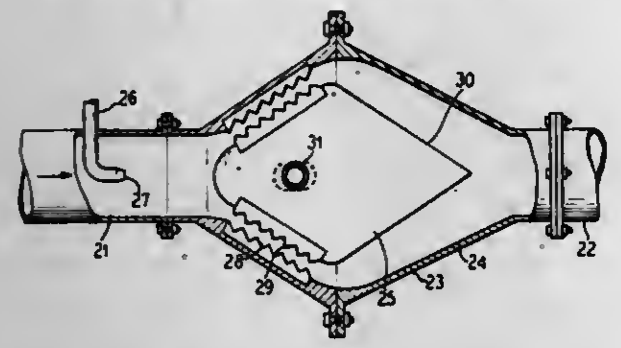

sion portion with the expansion portion of the venturi generating a distribution and dispersion pattern in the foam liquid;
means for delivering a surfactant foam to said pump;
means for mixing fibers in said foam;
and means having an opening into said upstream conduit for delivering a controlled amount of air to said foam in advance of the venturi for ingestion of the air into the foam in the mixing chamber.

4,299,656
INSPECTION AND TESTING DEVICE
Robert Weber, Uttenreuth, and Johannes Gallwas, Erlangen, both of Fed. Rep. of Germany, assignors to Kraftwerk Union Aktiengesellschaft, Mülheim, Fed. Rep. of Germany
Filed Jul. 30, 1979, Ser. No. 62,068
Claims priority, application Fed. Rep. of Germany, Aug. 1, 1978, 2833763
Int. Cl.³ G21C *17/00*
U.S. Cl. 376—249 **5 Claims**

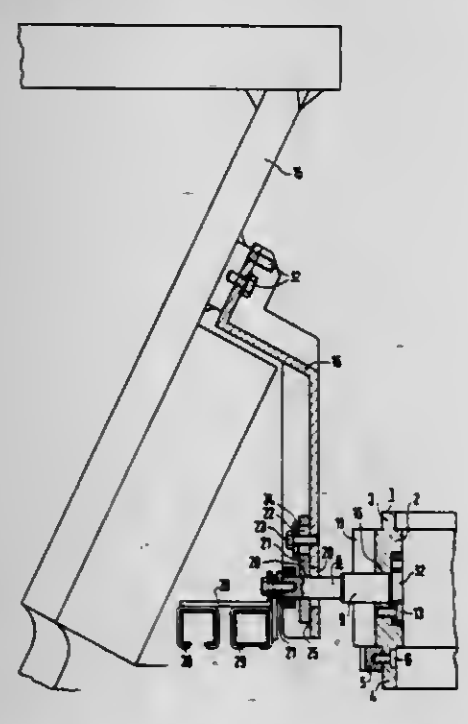

1. Device for inspecting and testing the bottom of a cylindrical pressure vessel having a circular track disposed in vicinity of the bottom of the pressure vessel and secured coaxially to the pressure vessel, comprising a plurality of strut members, means for connecting said strut members to the bottom of a pressure vessel, and a plurality of pins extending in a direction radial to the center of the circular track and supported in said strut members, said pins being fixed in said strut members against movement in a direction transverse to said pins, said pins being freely shiftable in said direction radial to the center of said circular track.

4,299,657
PROCESS FOR RUNNING A NUCLEAR REACTOR COOLED WITH LIGHT WATER
Georges Abenhaim, Paris, and Gerard Francillon, Puteaux, both of France, assignors to Framatome, Courbevole, France
Filed Oct. 3, 1979, Ser. No. 81,446
Int. Cl.³ G21C *7/06*
U.S. Cl. 376—217 **5 Claims**

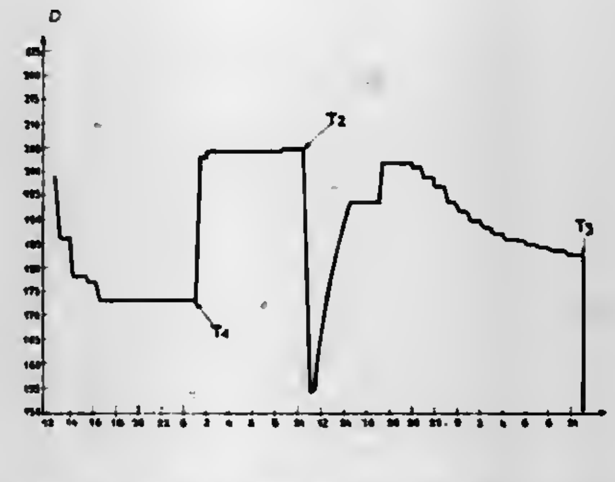

1. In a process for running a nuclear reactor cooled with light water, by displacing control rods and modifying the chemical and/or physical state of the coolant, so as to achieve optimum availability of the power of the reactor core at all times, said process having calculations of values of parameters related to the state of the reactor taking account of the safety limits of the reactor, and are made to control the evolution of the core of the reactor, the improvements comprising: measuring in numerical form and recording continuously the instantaneous values of running parameters representing the position of said control rods and the physical and chemical state of said coolant; each time a substantial modification of said running parameters of the reactor has taken place, and at predetermined intervals of time, while the reactor is in operation, and near the reactor, calculating the instantaneous values of certain parameters, relating to the neutron flux in the reactor core, the distribution of the power and the state of the fuel, with sufficient precision to run the reactor during a defined interval of time, as a function of said running parameters; measuring the values of said parameters relating to the state of the core at defined intervals of time; recording continuously said calculated and said measured values of said parameters relating to the state of the core; replacing said calculated values of said parameters by said measured values; calculating modified parameters resulting from predetermined sequences of action taken on said control rods or the state of said coolant, or from programs of the power to be supplied by the reactor, and the necessary action to be taken on said running parameters in order to follow a power program or to achieve, maintain or provide a given state of said core, by way of predictions, from said recorded values of said parameters which have been implemented, taking account of the safety limits of the reactor; and as a function of the results of said calculations, acting on said control rods and the state of said coolant automatically or via an operator.

4,299,658
RADIATION SHIELD RING ASSEMBLY AND METHOD OF DISASSEMBLING COMPONENTS OF A NUCLEAR STEAM GENERATOR USING SUCH ASSEMBLY
Robert E. Meuschke, Pittsburgh, and Donald L. Wolfe, Allison Park, both of Pa., assignors to Westinghouse Electric Corp., Pittsburgh, Pa.
Filed Jun. 29, 1979, Ser. No. 53,447
Int. Cl.³ B23P *19/04*
U.S. Cl. 250—506 **7 Claims**

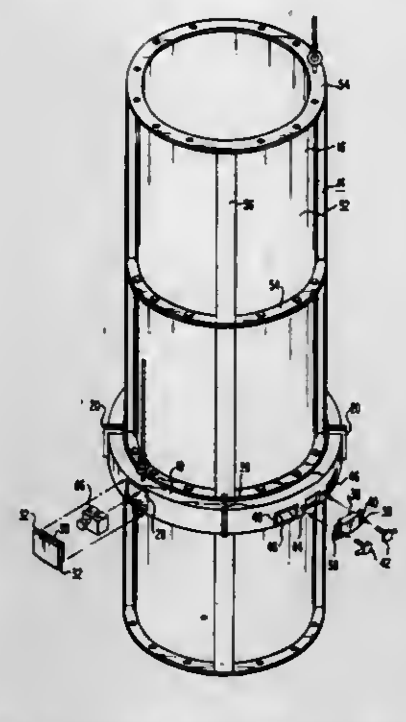

1. Apparatus for enclosing irradiated components removed from a nuclear steam generator and providing generally shielded access thereto for separating said components into smaller sizes, said apparatus comprising;
a container for enclosing said apparatus formed by a plurality of sections, each section having an external flange adjacent each end for securing to a like flange of the adjacent section;
a movable shield ring assembly encircling said container at an interface of adjacent flanges;
a plurality of roller means removably mounted to said container and interposed between said adjacent flanges to maintain said flanges separated and support said ring assembly thereon for rotatable movement about said container; and wherein,
said ring assembly is sized to completely cover said flange separation and defines a plurality of generally covered ports for access therethrough to and into the container, including access of cutting equipment to said irradiated components.

4,299,659
APPARATUS FOR STORING SELF-HEATING RADIOACTIVE MATERIALS
Walter Hame, Johannes-Brahms-Strasse 16, 7520 Bruchsal, and Ortwin Knappe, Grünaustrasse 19, 6450 Hanau 9, both of Fed. Rep. of Germany
Filed Feb. 19, 1980, Ser. No. 122,493
Claims priority, application Fed. Rep. of Germany, Feb. 21, 1979, 2906629
Int. Cl.³ G21C *19/20*
U.S. Cl. 376—272 **11 Claims**

1. An apparatus for storing self-heating radioactive materials, especially irradiated fuel elements which may be enclosed in containers, comprising:
a concrete shell;
an incoming air shaft in said shell for bringing cooling air from the atmosphere therein;
a distribution chamber positioned at a lower portion of said shell and coupled to said incoming air shaft so as to receive cooling air therethrough;
a plurality of horizontally disposed storage racks for receiving said radioactive materials positioned at various heights vertically within the shell from a low point that is above the top of said distribution chamber to a high point that is below the upper end of said concrete shell, said racks configured so as to allow air to flow upwards from said distribution chamber and about said racks, air flowing

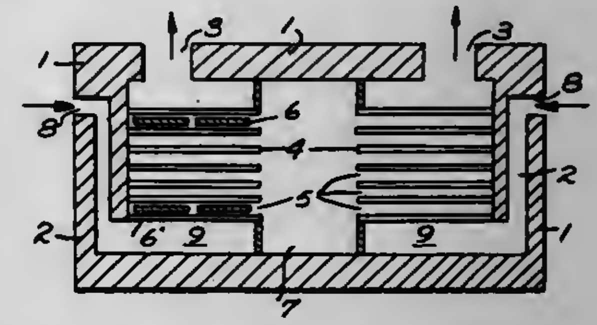

upwards and about said racks being heated by said radioactive materials;
a central loading area providing access to all of said racks so that radioactive materials can be added or removed from any rack;
an outgoing air shaft in said concrete shell for collecting air heated by said radioactive materials and expelling it to the atmosphere, whereby heat generated by said radioactive material is carried away and into the atmosphere by a natural convection air flow.

4,299,660
HEAT-EXTRACTION SYSTEM FOR GAS-COOLED NUCLEAR REACTOR
Robert N. Quade, La Jolla, Calif., assignor to General Atomic Company, San Diego, Calif.
Filed Jun. 16, 1978, Ser. No. 916,349
Int. Cl.³ G21C *3/56*
U.S. Cl. 376—298 **5 Claims**

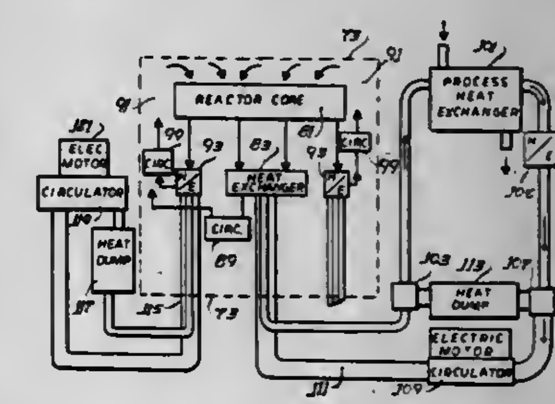

1. A gas-cooled nuclear reactor including
a reactor core,
a pressure vessel in which said core is located,
heat-exchange means in said pressure vessel,
primary circulator means for circulating gas coolant through said reactor core and then through said heat-exchange means, and
means including secondary circulator means for extracting heat from said reactor by causing a secondary gaseous coolant stream to flow through said heat-exchange means,
wherein the improvement comprises
said heat-exchange means raises said secondary gaseous coolant to a temperature suitable to supply heat for process heat applications,
said primary circulator means being arranged to discharge the repressurized primary gas coolant along an inner boundary region of said pressure vessel,
said pressure vessel having a cavity which is divided into upper and lower chambers by a horizontally-extending

intermediate floor which supports said core thereabove and with said heat-exchange means and primary circuit circulator means being disposed in said lower chamber,
said pressure vessel being circular in horizontal cross section and said floor being circular and of smaller diameter to provide an annular passageway which interconnects said upper and lower chambers and through which passageway the primary coolant discharge from said primary circulator means is returned to said reactor core,
said heat extraction means including a plurality of secondary gas coolant circuits connected to said heat-exchange means, and
emergency cooling means associated with each of said secondary circuits including heat dump means exterior of said pressure vessel for promptly providing relatively low temperature, secondary gas coolant in said circuit for emergency heat removal from said core whereby said secondary gas circulator means in addition to extracting the process heat from said reactor during normal operations also functions to extract heat from said reactor during emergency cooling.

4,299,661

MONITORING ARRANGEMENT FOR VENTED NUCLEAR FUEL ELEMENTS

Robert J. Campana, Solana Beach, Calif., assignor to The United States of America as represented by the United States Department of Energy, Washington, D.C.

Filed Aug. 3, 1978, Ser. No. 930,718

Int. Cl.² G21C *3/16*

U.S. Cl. 376—251 **6 Claims**

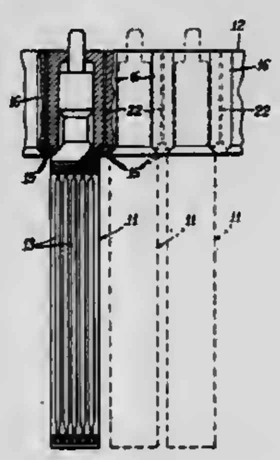

1. In a core assembly for a nuclear reactor having a plurality of fuel-rod containing fuel elements compactly arranged in a hexagonal array and supported closely adjacent each other during operation of the core, each of the fuel elements including means for admitting coolant gas to an interior portion thereof in order to equalize static pressure across cladding of the fuel rods and permit concomitant venting of fission gases, each of the fuel elements having diametrically opposed vents to facilitate selective rotation of the fuel elements to compensate for bowing due to irradiation, an improved arrangement of interconnecting means for communicating vents on the individual fuel elements with respective monitoring means comprising a grid plate surrounding and engaging each of the fuel elements adjacent the diametrically opposed outlet vents therein, monitoring passages being formed in said grid plate for respective communication with the outlet vents in the individual fuel elements, combinations of said monitoring passages being interconnected with a common monitor passage, means connecting each common monitor passage with a single monitor line, the combination of monitor passages being interconnected with each common monitor passage being selected to permit a uniformly repeating geometric arrangement of monitoring passages throughout the hexagonal array of fuel elements and with the opposed vents of each fuel element being interconnected with different common monitor passages.

4,299,662

CONNECTING APPARATUS FOR LIMITED ROTARY OR RECTILINEAR MOTION

Roy T. Hardin, Jr., Greensburg, Pa., assignor to The United States of America as represented by the United States Department of Energy, Washington, D.C.

Continuation of Ser. No. 800,257, May 25, 1977, abandoned. This application Apr. 9, 1979, Ser. No. 28,136

Int. Cl.³ G21C *19/20*

U.S. Cl. 376—260 **5 Claims**

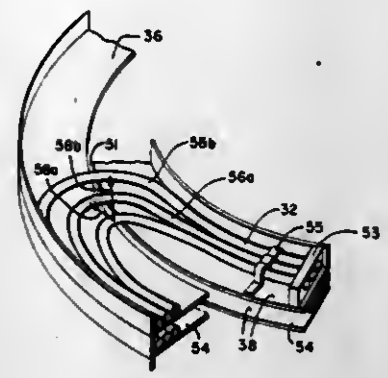

1. A nuclear reactor including substantially stationary members, a horizontally rotatable vessel head plug mounted above a nuclear core, and apparatus for providing connection between one of said members and said plug comprising:
a. a first plurality of affixed horizontal surfaces spaced one above another, each having an upwardly extending restraint;
b. a second plurality of affixed horizontal surfaces spaced one above another, each having an upwardly extending restraint;
c. structure for affixing said first surfaces to said one member and said second surfaces to said rotatable plug such that said first surfaces are vertically aligned with said second surfaces and are spaced therefrom a preselected distance;
d. a first plurality of flexible cables, each said cable being stationary at one portion with respect to said one member and stationary at another portion with respect to said rotatable plug and positioned partially upon one of said first surfaces and partially upon the respective aligned second surface, between their respective restraints, so as to form a generally U-shaped loop in a first horizontal plane which slidingly moves with respect to both of said surfaces upon rotation of said plug; and
e. a second plurality of flexible cables, each said cable of said second plurality being stationary at one portion with respect to said one member and stationary at another portion with respect to said rotatable plug and positioned partially upon another one of said first surfaces and partially upon a respective aligned another second surface, between their respective restraints, so as to form a generally U-shaped loop in a second horizontal plane displaced from said first horizontal plane which loop slidingly moves with respect to both of said another surfaces upon rotation of said plug.

4,299,663

VAPOR GENERATING DEVICE

James W. McCord, 9101 Nottingham Pkwy., Louisville, Ky. 40222

Filed Apr. 21, 1980, Ser. No. 142,107

Int. Cl.³ B01D *3/42;* **B08B** *7/04*

U.S. Cl. 202—170 **5 Claims**

1. A vapor generating device for immersing objects to be cleaned in a vaporizing solvent comprising:
A housing having at least one container therein for vaporizing and condensing the vaporizing solvent, said container having an open top and a closed bottom with cooling means in an upper portion thereof, the container having a heat means in a lower portion thereof operable in response to a change in energy requirements in said container, said heat means includes a first heat means and a second heating means, the

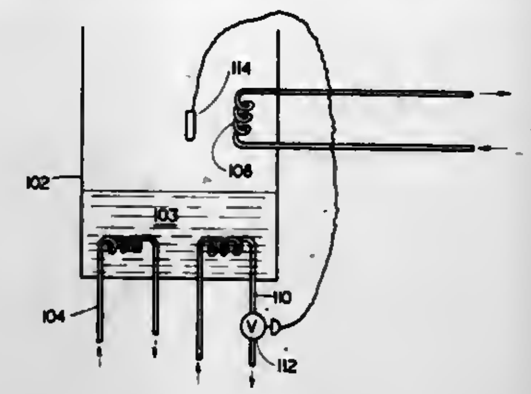

first heating means having a fixed heat input and the second heating means having a variable heat input actuated by a sensing device disposed in said upper portion.

4,299,664

VAPOR DEGREASER

Jeffrey C. Smith, Prospect, Conn., assignor to Branson Ultrasonics Corporation, New Canaan, Conn.

Filed Nov. 26, 1980, Ser. No. 210,274

Int. Cl.³ B01D *3/42*

U.S. Cl. 202—170 **2 Claims**

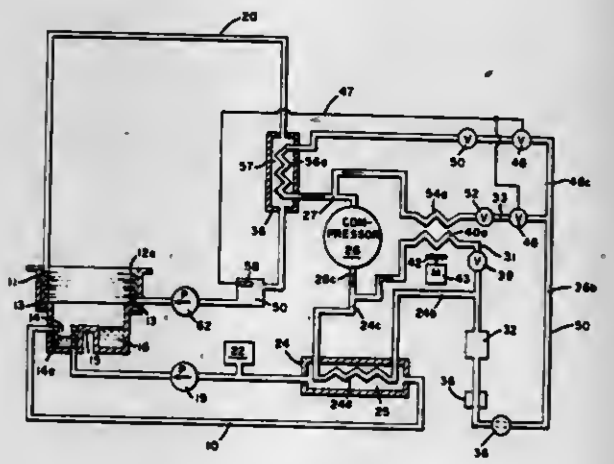

1. A vapor degreaser comprising:
a housing including a sump for containing a liquid solvent;
beating coils disposed in said sump for vaporizing the solvent;
cooling coils disposed around the perimeter of said housing above the sump for condensing vaporized solvent which is returned to said sump;
a refrigeration loop adapted to conduct refrigerant comprising the series connection of a first fluid conducting passage of a heat exchanger, a refrigerant receiver, a dryer, a normally open fluid valve, a thermal expansion valve, a first fluid conducting passage of an evaporator, and a compressor;
a first liquid loop adapted to conduct water or a water based liquid comprising the series connection of a pump, said heating coils, a second fluid conducting passage of said heat exchanger whereby said first and second passages are in heat exchanging relation, and a first liquid reservoir;
a second liquid loop adapted to conduct water or a water based liquid comprising the series connection of a pump, said cooling coils, a second fluid passage of said evaporator whereby said first passage and second passage of said evaporator are in heat exchanging relation, and a second liquid reservoir;
means to maintain thermal balance in said degreaser, further comprising;
a first bypass branch adapted to conduct refrigerant and including a refrigerant pressure regulating valve for causing refrigerant flow therethrough commensurate with the pressure in said refrigeration loop and auxiliary condensing coils coupled between the discharge side of the compressor and a point between said refrigerant receiver and said first fluid conducting passage of the heat exchanger of said refrigeration loop;
a second bypass branch adapted to conduct refrigerant and including a normally closed fluid valve, a thermal expansion valve and auxiliary evaporating coils coupled to the suction side of said compressor and to a point between said normally open fluid valve and said dryer of said refrigeration loop;
a temperature sensing means disposed in said second liquid reservoir coupled to said normally open fluid valve of said refrigerant loop and to said normally closed fluid valve of said second bypass branch for causing at a predetermined temperature below ambient said normally open fluid valve to close and said normally closed fluid valve to open.

4,299,665

SEPARATION APPARATUS FOR IMMISCIBLE LIQUIDS

B. Jan Clay, Indianapolis; Phillip H. Braun, Camby, and Rudy Vingris, Indianapolis, all of Ind., assignors to DCI Corporation, Indianapolis, Ind.

Filed Jul. 25, 1980, Ser. No. 172,172

Int. Cl.³ B01D *3/38, 21/10*

U.S. Cl. 202—204 **21 Claims**

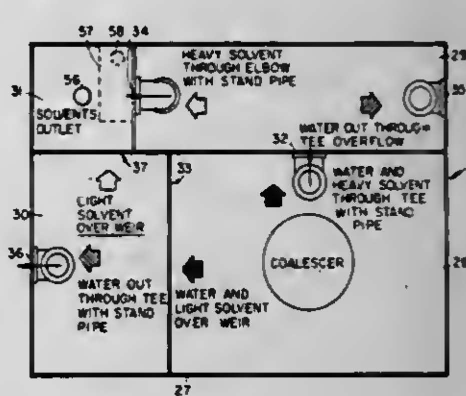

1. A separation apparatus for separating immiscible liquids which comprises:
a first tank having an inlet, a first outlet opening in the upper portion of said first tank, and a second outlet opening higher than the first outlet opening, said first tank further including first conduit means for connecting the first outlet opening to a point near the bottom of said first tank;
a second tank having an inlet, a third outlet opening in the upper portion of said second tank, and a fourth outlet opening higher than the third outlet opening, the first outlet opening of said first tank being connected with the inlet of said second tank, said second tank further including second conduit means for connecting the third outlet opening to a point near the bottom of said second tank; and
a third tank having an inlet, a fifth outlet opening in the upper portion of said third tank, and a sixth outlet opening higher than the fifth outlet opening, the second outlet opening of said first tank being connected with the inlet of said third tank, said third tank further including third conduit means for connecting the fifth outlet opening to a point near the bottom of said third tank.

4,299,666

HEATING WALL CONSTRUCTION FOR HORIZONTAL CHAMBER COKE OVENS

August Ostmann, Händelstrasse 31, 4350 Recklinghausen, Fed. Rep. of Germany, assignor to Firma Carl Still GmbH & Co. KG, Fed. Rep. of Germany

Filed Mar. 28, 1980, Ser. No. 135,111

Claims priority, application Fed. Rep. of Germany, Apr. 10, 1979, 2914387

Int. Cl.^{3} C10B *5/02, 23/00, 29/02*

U.S. Cl. 202—267 R **5 Claims**

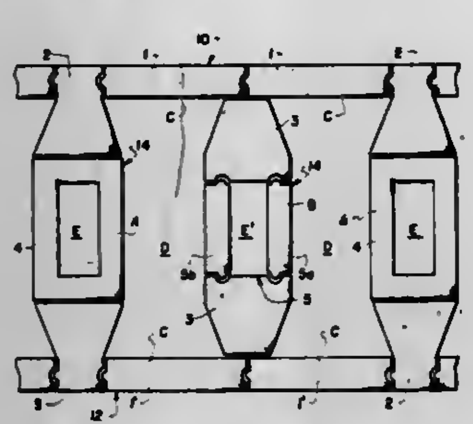

1. An improved heating wall construction for a coke oven of the type having a plurality of horizontally spaced coke oven chambers separated by spaced-apart vertically extending heating walls, each heating wall being divided into a plurality of vertically extending flues, each heating wall being formed of spaced apart first and second stretcher stone walls, a plurality of horizontally spaced header walls extending between the stretcher stone walls of adjacent oven chambers to divide the space between adjacent header walls and the stretcher stone walls into the vertically extending heating flues, each of the header walls having a vertically extending hollow central portion defining a fuel supply space and comprising a plurality of vertically stacked headers including first headers having opposite tie-in ends extending into respective stretcher stone walls to the coal contacted surface thereof and second headers alternating vertically with the first headers and having opposite abutting ends abutting the interior of the respective stretcher stone walls, the width of each header wall, at the center thereof intermediate the stretcher stone walls, being substantially greater than the width of the header walls adjacent the stretcher stone walls, said header walls having transfer slots therein connecting the fuel supply space and an adjacent heating flue, each of the stretcher stones having a thickness of less than 110 mm in the direction of heat transfer extending from the heating flues toward the oven chamber, the improvement wherein the width of each of the header walls is greater than 200 mm wide at the widest point thereof and the ends of the headers at their abutting and tie-in ends is wider than 100 mm.

4,299,667

PROCESS FOR RECOVERING PURE BENZENE

Helmut Klein, Hanau, and Kamar P. John, Bad Homburg, both of Fed. Rep. of Germany, assignors to Metallgesellschaft Aktiengesellschaft, Frankfurt, Fed. Rep. of Germany

Filed Jul. 28, 1980, Ser. No. 172,728

Claims priority, application Fed. Rep. of Germany, Jul. 31, 1979, 2931012

Int. Cl.^{3} B01D *3/10, 3/40*

U.S. Cl. 203—42 **4 Claims**

1. A process for recovering benzene from a mixture of the same with gaseous and difficultly condensible non-aromatic compounds which comprises

(A) distilling said mixture at atmospheric or reduced pressure to distill over benzene, and said non-aromatic compounds and to obtain impurities and higher boiling components as a sump product;

(B) cooling said overhead from Step A to temperatures of 40° to 80° C. and producing a condensate containing benzene, returning a first position of said condensate to the distillation of step A;

(C) feeding a second portion of said condensate from step B to an extractive distillation zone and therein extractively distilling said second portion to obtain pure benzene;

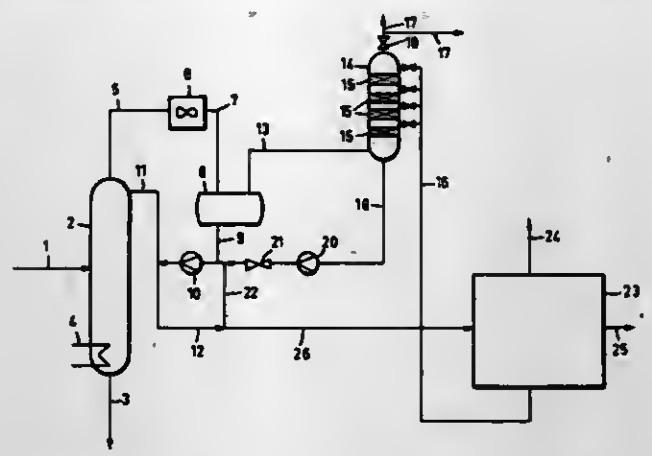

(D) feeding the non-condensed components from step B to a scrubbing zone and therein contacting the same with counter-flowing selective solvent to remove benzene from said non-condensed components and removing a mixture comprising said selective solvent and benzene from said scrubbing zone and feeding said mixture to the distillation of step A or the extractive distillation zone of step C.

4,299,668

SEPARATION OF ETHYLBENZENE FROM PARA- AND META-XYLENES BY EXTRACTIVE DISTILLATION

Lloyd Berg, Bozeman, Mont., assignor to International Synthetic Rubber Co., Ltd., London, England

Filed Feb. 23, 1981, Ser. No. 236,998

Int. Cl.^{3} B01D *3/40;* **C07C** *7/00*

U.S. Cl. 203—51 **12 Claims**

1. A method for separating ethylbenzene from p-xylene and/or m-xylene which comprises distilling in a substantially anhydrous condition a mixture of ethylbenzene, p-xylene and-/or m-xylene in a rectification column in the presence of an effective amount of an extractive agent comprising pentachlorophenol and one or more other compounds drawn from the group comprising 2,4-dichlorotoluene, 1,2,4-trichlorobenzene, 1,2,4,5-tetrachlorobenzene, polychlorobenzenes (a mixture of tetra- and pentachlorobenzenes), benzene hexachloride, 2,3,4,6-tetrachlorophenol, 1,2,3-trichloropropane, n-butoxyethanol.

4,299,669

METHOD FOR DETERMINING THE CONCENTRATION OF AN L-AMINO ACID IN FERMENTATION

Haruo Obana, Kawasaki; Tadashi Shirakawa, Zushi; Motohiko Hikuma, Yokohama; Takeo Yasuda, Yokohama; Isao Karube, Tachikawa, and Shuichi Suzuki, Tokyo, all of Japan, assignors to Ajinomoto Company, Incorporated, Tokyo, Japan

Filed Mar. 27, 1979, Ser. No. 24,330

Claims priority, application Japan, Mar. 28, 1978, 53/35906; May 31, 1978, 53/65380

Int. Cl.^{3} C12Q *1/00, 1/12*

U.S. Cl. 204—1 T **5 Claims**

1. A method for determining the concentration of a L-amino acid in a culture medium or cultured broth solution which comprises:

contacting said culture anaerobically with a microbial electrode comprising a fixed or immobilized microorganism capable of anaerobically decarboxylating said L-amino acid and thereby liberating carbon dioxide into said culture, and a carbon dioxide gas sensitive electrode;

electrochemically measuring the liberation of carbon dioxide into said culture with said electrode and thereby correspondingly determining the concentration of said L-amino acid in said culture.

4,299,670

PALLADIUM PLATING PROCEDURE AND BATH

Joseph Yahalom, Summit, N.J., assignor to Bell Telephone Laboratories, Incorporated, Murray Hill, N.J.

Filed Sep. 22, 1980, Ser. No. 189,725

Int. Cl.^{3} C25D *3/52, 5/34*

U.S. Cl. 204—29 **32 Claims**

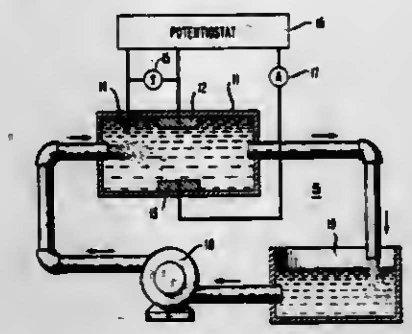

1. A process for plating palladium onto a surface from an aqueous ammoniacal plating bath comprising a source of palladium for electroplating, said source of palladium comprising a palladium amine complexing ion, said process comprising the step of passing current through cathode, plating bath and anode characterized in that the surface is exposed to a solution comprising at least one benzotriazole compound selected from the group consisting of benzotriazole and substituted benzotriazole with substituents in at least one of the 4, 5, 6 and 7 positions of the benzene ring, said substituents selected from the group consisting of hydrocarbons with up to 5 carbon atoms, chlorine, bromine and nitrate groups.

16. An aqueous palladium electroplating bath comprising a source of palladium for electroplating, said source of palladium comprising a palladium amine complexing ion, and aqueous ammonia characterized in that the palladium electroplating bath further comprises at least one benzotriazole compound selected from the group consisting of benzotriazole and substituted benzotriazole with substituents in the 4, 5, 6 and 7 positions of the benzene ring, said substituents selected from the group consisting of hydrocarbons with up to 5 carbon atoms, chlorine, bromine and nitrate groups.

4,299,671

BATH COMPOSITION AND METHOD FOR ELECTRODEPOSITING COBALT-ZINC ALLOYS SIMULATING A CHROMIUM PLATING

Robert A. Tremmel, Woodhaven, and Walter J. Wieczerniak, Utica, both of Mich., assignors to Hooker Chemicals & Plastics Corp., Warren, Mich.

Filed Jun. 13, 1980, Ser. No. 159,402

Int. Cl.^{3} C25D *3/56, 5/48*

U.S. Cl. 204—35 R **40 Claims**

1. An aqueous bath composition for electrodepositing a cobalt-zinc alloy, which bath is substantially free of tin ions and contains about 1 to about 12 g/l cobalt ions, about 0.75 to about 9 g/l zinc ions, and a complexing agent present in an amount sufficient to maintain said cobalt and zinc ions in solution, which bath has a pH of about 6 to about 9.

23. The method of electrodepositing a cobalt-zinc alloy on a conductive substrate to impart a simulated chromium appearance thereto, comprising the steps of contacting the substrate with an aqueous electrolyte at a pH of about 6 to about 9, containing about 1 to about 12 g/l cobalt ions, about 0.75 to about 9 g/l zinc ions, a complexing agent present in an amount sufficient to maintain said cobalt and zinc ions in solution, controlling the ratio of said cobalt and zinc ions in said electrolyte to electrodeposit a cobalt-zinc alloy containing about 75 to about 85% by weight zinc and the balance essentially cobalt, and electrifying said substrate while in contact with said electrolyte to deposit a cobalt-zinc alloy plating of the desired thickness.

36. The method as defined in claim 23 including the further steps of water rinsing said substrate with said deposit of cobalt-zinc alloy thereon and subjecting the plated said substrate to a passivation treatment.

4,299,672

BATH AND PROCESS FOR GALVANIC SEPARATION OF PALLADIUM-NICKEL ALLOYS

Hans-Jürgen Ehrich, and Jörg Wähnelt, both of Berlin, Fed. Rep. of Germany, assignors to Schering Aktiengesellschaft, Berlin and Bergkamen, Fed. Rep. of Germany

Filed Dec. 29, 1975, Ser. No. 644,565

Claims priority, application Fed. Rep. of Germany, Feb. 7, 1975, 2506467

Int. Cl.^{3} C25D *3/56*

U.S. Cl. 204—43 N **4 Claims**

1. An aqueous ammoniacal bath for the galvanic deposition of a palladium-nickel alloy containing as its essential ingredients a palladium salt and a nickel salt in alloy-forming proportions, said palladium and nickel salts being present in the form of a complex with a complexing amount of at least one sequestering agent selected from the group consisting of glycine, aminopropionic acid, glyoxylic acid, triethylene tetramine, beta-dihydroxyphenyl-alpha-aminobutyric acid, 5-keto-valerianic acid, acetone dicarboxylic acid, polyethylene polyimine, and butanone-3-carboxylic acid.

4,299,673

METHOD OF CONCENTRATING ALKALI METAL HYDROXIDE IN HYBRID CELLS HAVING CATION SELECTIVE DIFFUSION BARRIERS

Bogdan M. Broniewski, 2527 Alta Vista Dr., Newport Beach, Calif. 92660

Continuation-in-part of Ser. No. 107,688, Dec. 27, 1979, which is a continuation of Ser. No. 32,151, Apr. 23, 1979, abandoned. This application May 13, 1980, Ser. No. 149,501

Int. Cl.^{3} C25G *1/34, 9/00*

U.S. Cl. 204—98 **36 Claims**

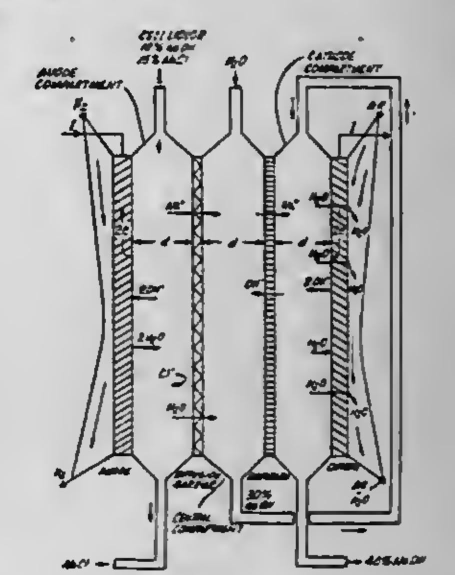

1. A process for production of concentrated alkali metal hydroxide aqueous solution and electrical energy comprising the steps of:

(a) introducing flow of an aqueous alkali metal hydroxide solution as anolyte between a first surface of a gas diffusion anode and a first surface of a diffusion barrier; said diffusion barrier being selectively permeable to cations;

(b) introducing flow of an aqueous fluid medium receptive to alkali metal ions, as catholyte, between a second surface of said diffusion barrier and a first surface of a diaphram permeable to cations and anions.

(c) withdrawing catholyte from between the diffusion barrier second surface and the diaphram first surface;

(d) introducing flow of the catholyte, withdrawn from between the diffusion barrier second surface and the diaphram first surface, between a second surface of the diaphram and a first surface of a gas diffusion cathode;
(e) supplying hydrogen gas to a second surface of said gas diffusion anode;
(f) supplying oxygen-containing gas to a second surface of said gas diffusion cathode;
(g) causing alkali metal ions to pass from the anolyte through the diffusion barrier and into the catholyte flowing between the diaphram first surface and the diffusion barrier second surface by electrically interconnecting the gas diffusion anode and the gas diffusion cathode through an external load, thereby generating electrical energy by oxidation of the hydrogen gas supplied to the gas diffusion anode second surface and reduction of oxygen in the oxygen-containing gas supplied to the gas diffusion cathode second surface;
(h) withdrawing, from between the gas diffusion cathode first surface and the diaphram second surface, a concentrated alkali metal hydroxide aqueous solution.

4,299,674
PROCESS FOR ELECTROLYZING AN ALKALI METAL HALIDE USING A SOLID POLYMER ELECTROLYTE CELL
Malcolm Korach, Pittsburgh, Pa., assignor to PPG Industries, Inc., Pittsburgh, Pa.
Filed Jun. 2, 1980, Ser. No. 155,278
Int. Cl.³ C25B *1/34*
U.S. Cl. 204—98 8 Claims

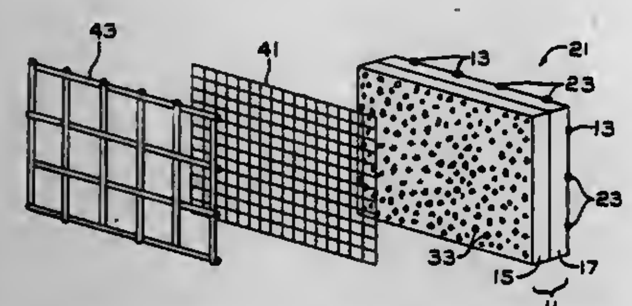

1. In a method of electrolyzing alkali metal chloride brine comprising
(1) feeding the brine to an anolyte compartment of an electrolytic cell having:
a. a permionic membrane having an anodic portion and a cathodic portion;
b. anodic means in contact with the anodic portion of the permionic membrane; and
c. cathodic means in contact with the cathodic portion of the permionic membrane;
(2) passing an electrical current through the cell, and
(3) recovering chlorine from an anolyte compartment thereof;
the improvement wherein the anodic portion of the permionic membrane comprises acidic groups and the cathodic portion comprises anion selective, basic groups chosen from the group consisting of primary amines, secondary amines, tertiary amines, quaternary amines, and mixtures thereof.

4,299,675
PROCESS FOR ELECTROLYZING AN ALKALI METAL HALIDE
Malcolm Korach, Pittsburgh, Pa., assignor to PPG Industries, Inc., Pittsburgh, Pa.
Filed Oct. 9, 1980, Ser. No. 195,570
Int. Cl.³ C25G *1/34*
U.S. Cl. 204—98 26 Claims

14. In a method of conducting electrolysis in an electrolytic cell having an anolyte compartment containing an anode, a catholyte compartment containing a cathode, and a cation selective permionic membrane therebetween, which method comprises feeding alkali metal chloride brine to the anolyte compartment, passing an electrical current from the anode to the cathode, and evolving chlorine at the anode, the improvement wherein the anode removably bears upon the permionic membrane and comprises an electroconductive substrate, anodic electrocatalyst bonded to the electroconductive substrate, and facing the cation selective permionic membrane, and a layer of hydrophilic resin bonded to the electrocatalyst, said layer of hydrophilic resin removably bearing upon the cation selective permionic membrane whereby to avoid the presence of liquid electrolyte therebetween.

4,299,676
RECOVERY OF SILVER FROM PHOTOGRAPHIC FILM
John H. Skinner, Royston Herts, and James S. Bentley, Tewin, both of England, assignors to Photographic Silver Recovery Limited, Waltham Cross, England
Filed Mar. 27, 1980, Ser. No. 134,503
Claims priority, application United Kingdom, Jan. 31, 1980, 3307/80
Int. Cl.³ C25B *15/08;* C25C *1/20*
U.S. Cl. 204—109 16 Claims

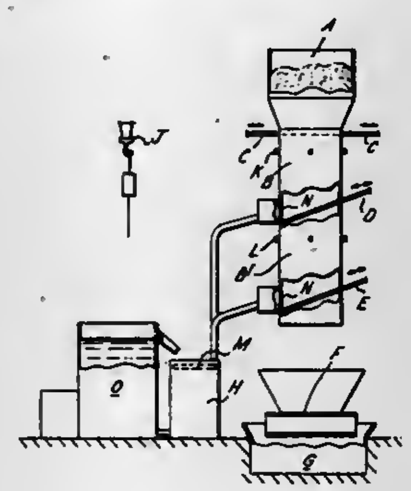

1. A process for the recovery of silver from photographic film comprising the steps of:
(a) shredding or chopping the film material into strips or pieces of predetermined size;
(b) bleaching the shredded or chopped film material in a bath of bleach solution to convert the metallic silver present to silver salts that remain on the film material;
(c) performing a first stage washing operation in which the bleached film material is washed with first stage wash water;
(d) thereafter performing a second stage washing operation in which the bleached film material is washed with a second stage alkaline wash liquid separate and different from and more alkaline than the first stage wash water;
(e) fixing the washed film material in at least one bath of fixing solution to remove the silver salts into the fixing solution;
(f) collecting and transporting away the film base material from which the silver salts have been removed; and
(g) circulating the fixing solution through at least one electrolytic silver recovery unit where the silver is electrolytically deposited on a cathode.

4,299,677
PROCESS FOR THE PREFERENTIAL SEPARATION OF FRUCTOSE FROM GLUCOSE
Kalyanasundram Venkatasubramanian, New Brunswick, N.J.; Surendar M. Jain, Watertown, and Anthony J. Giuffrida, North Andover, both of Mass., assignors to The Hubinger Co., Keokuk, Iowa and Ionics, Inc., Watertown, Mass., a part interest to each
Filed Nov. 3, 1980, Ser. No. 203,633
Int. Cl.³ B01D *13/02*
U.S. Cl. 204—180 P 3 Claims

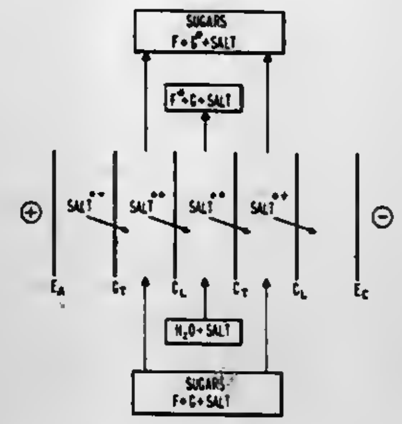

1. The process of separating fructose preferentially from a mixture of glucose and fructose by electrodialysis comprising the steps of (1) passing a liquid mixture of fructose and glucose through a first feed chamber of an electro-osmosis cell comprising at least two chambers defined between ion exchange membranes having alternating high and low permeability coefficients with respect to each other, (2) passing a direct electric current transversely through said membranes and chambers in a direction to cause the fructose to pass from said feed chamber through said high permeability coefficient membrane into a second chamber of said cell with said fructose being substantially retained in the second chamber, and (3) recovering a glucose enriched and a fructose enriched effluent from the separate chambers.

4,299,678
MAGNETIC TARGET PLATE FOR USE IN MAGNETRON SPUTTERING OF MAGNETIC FILMS
Benjamin B. Meckel, Del Mar, Calif., assignor to Spin Physics, Inc., San Diego, Calif.
Filed Jul. 23, 1979, Ser. No. 59,817
Int. Cl.³ C23C *15/00*
U.S. Cl. 204—192 M 8 Claims

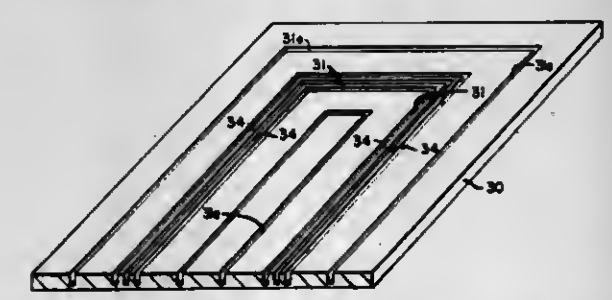

1. In a magnetron sputtering apparatus of the type which includes means for producing a gas plasma, magnetic means for producing a magnetic field, a magnetic target, means for positioning the magnetic target between the gas plasma and the magnetic means, and means for heating the magnetic target to a temperature at which the saturation magnetization of the magnetic target is substantially reduced, whereby the magnetic field can penetrate the target and densify the gas plasma, the improvement wherein said magnetic target comprises:
means defining selected regions of relatively high reluctance in said magnetic target, said regions cooperating with said magnetic means to cause said magnetic field to extend into the gas plasma and to thereby densify portions of said plasma before the heating means is effective to substantially reduce the saturation magnetization of the target.

4,299,679
METHOD OF PRODUCING JOSEPHSON ELEMENTS OF THE TUNNELING JUNCTION TYPE
Hideo Suzuki, Yokohama, Japan, assignor to Fujitsu Limited, Kawasaki, Japan
Filed Dec. 19, 1979, Ser. No. 105,011
Claims priority, application Japan, Dec. 27, 1978, 53-162282
Int. Cl.³ C23C *15/00;* H01L *39/22*
U.S. Cl. 204—192 EC 10 Claims

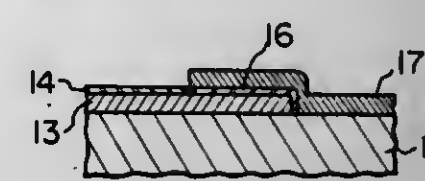

1. In a method of producing a Josephson element of the tunneling junction type comprising the steps of forming a first electrode of the element on a substrate, by deposition of a first superconductor material layer in an evacuated apparatus for film deposition by utilizing a first photoresist film, forming a barrier oxide film on said first electrode, and forming a second electrode of the element by deposition of a second superconductor material layer on said barrier oxide film by utilizing a second photoresist film, the improvement comprising:
immediately after the deposition in said deposition apparatus of the first superconducting material film of said first electrode, oxidizing the upper portion of said superconducting material film in the same said deposition apparatus, prior to removing said substrate from said deposition apparatus thereby avoiding exposing said first superconducting material to undesired contamination and oxidation,
subsequently controllably forming said barrier oxide film to a predetermined thickness by an rf oxygen glow discharge process having both a sputter-etching effect and an oxidizing effect.

4,299,680
METHOD OF FABRICATING MAGNETIC BUBBLE MEMORY DEVICE HAVING PLANAR OVERLAY PATTERN OF MAGNETICALLY SOFT MATERIAL
Robert E. Fontana, Jr.; David C. Bullock; Shalendra K. Singh, all of Dallas, and John M. Bush, Plano, all of Tex., assignors to Texas Instruments Incorporated, Dallas, Tex.
Filed Dec. 31, 1979, Ser. No. 108,888
Int. Cl.³ C23C *15/00;* C23F *1/02*
U.S. Cl. 204—192 E 15 Claims

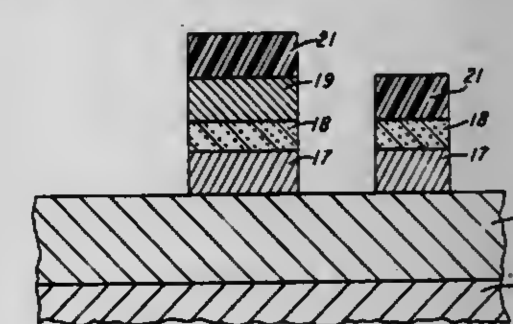

1. In a method of fabricating a magnetic bubble memory device, the steps comprising:
consecutively depositing onto a substrate having a magnetic film capable of supporting magnetic bubbles therein, at least the following

a planar layer of non-magnetic electrically conductive material;
a planar layer of insulating material; and
a planar layer of magnetically soft material; and
proceeding from the uppermost layer downwardly, patterning each of the respective layers in sequence, by
initially forming a first pattern mask on the layer of magnetically soft material which selectively exposes regions thereof;
patterning the layer of magnetically soft material to provide a planar overlay pattern thereof by selectively removing the exposed regions of the layer of magnetically soft material to uncover corresponding regions of the layer of insulating material;
removing the first pattern mask to expose the remaining portions of the layer of magnetically soft material as a planar overlay pattern;
patterning the layers of insulating material and non-magnetic electrically conductive material in sequence by depositing a layer of photosensitive material covering the planar overlay pattern of magnetically soft material and the exposed portion of the layer of insulating material;
selectively exposing the layer of photosensitive material to an energy source to impart a latent image therein;
developing the photosensitive material to form a second pattern mask exposing at least selected regions of the layer of insulating material;
selectively removing the exposed regions of the layer of insulating material; and
thereafter selectively removing the corresponding regions of the layer of non-magnetic electrically conductive material beneath the previously removed exposed regions of the layer of insulating material such that the patterned non-magnetic electrically conductive layer underlies the entire surface area of the planar overlay pattern of magnetically soft material in insulated relationship with respect thereto.

4,299,681
HYDROCHLORIC ACID ELECTROLYZER
Luciano Mose, Dortmund; Helmuth Schurig, Holzwickede, and Bernd Strasser, Hamm, all of Fed. Rep. of Germany, assignors to UHDE GmbH, Dortmund, Fed. Rep. of Germany
Filed Feb. 4, 1980, Ser. No. 118,560
Claims priority, application Fed. Rep. of Germany, Mar. 2, 1979, 2908269
Int. Cl.³ C25B *9/04*
U.S. Cl. 204—255 **3 Claims**

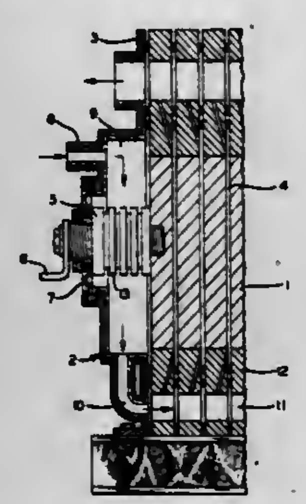

1. A hydrochloric acid electrolyzer comprising a plurality of bipolar electrodes in electrode frames, diaphragms arranged between the electrodes defining anolyte and catholyte chambers, a pressure plate at each end of the electrolyzer, at least one insulated current conducting element penetrating each pressure plate and connected to the adjacent electrode, an electrolyte flow space defined between each pressure plate and the adjacent electrode, electrolyte distribution chambers defined within said frames, said electrolyte distribution chambers being in fluid communication with one end of each of said electrolyte flow spaces, and inlet and outlet means to said electrolyte flow space, said inlet and outlet means spaced from said electrolyte distribution chambers, whereby all electrolyte flows through said electrolyte flow spaces.

4,299,682
GAS DIFFUSION ELECTRODE
Yoshio Oda; Takeshi Morimoto, and Kohji Suzuki, all of Yokohama, Japan, assignors to Asahi Glass Company, Ltd., Tokyo, Japan
Filed Feb. 13, 1980, Ser. No. 121,038
Claims priority, application Japan, Feb. 27, 1979, 54-21347; Mar. 6, 1979, 54-25149
Int. Cl.³ C25B *9/00, 11/03, 11/08;* **H01M** *4/90*
U.S. Cl. 204—265 **17 Claims**

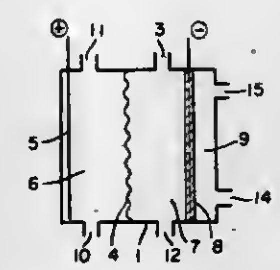

1. A gas diffusion electrode having a conductive porous layer in contact with a conductive current collector, said porous layer being made by sintering a shaped mixture of a filler, a catalyst, a hydrophobic bonding material and at least one perforating agent selected from the group consisting of nickel, cobalt and iron salts of a carboxylic acid, the sintering of the mixture being carried out to decompose the perforating agent and to produce a porous bonded layer permeable to gas and repellant to water.

4,299,683
APPARATUS AND METHOD FOR EFFICIENT TRANSFER OF POWDERED ORE
Vincent C. Adorno, Massena; Elizabeth A. Fessenden; Stephen R. Barr, both of Norwood; Zebulon T. Gibson, Jr., and John P. Carroll, both of Massena, all of N.Y., assignors to Aluminum Company of America, Pittsburgh, Pa.
Filed Jul. 17, 1980, Ser. No. 169,648
Int. Cl.³ C25C *3/14;* **B65G** *53/20, 53/60*
U.S. Cl. 204—246 **15 Claims**

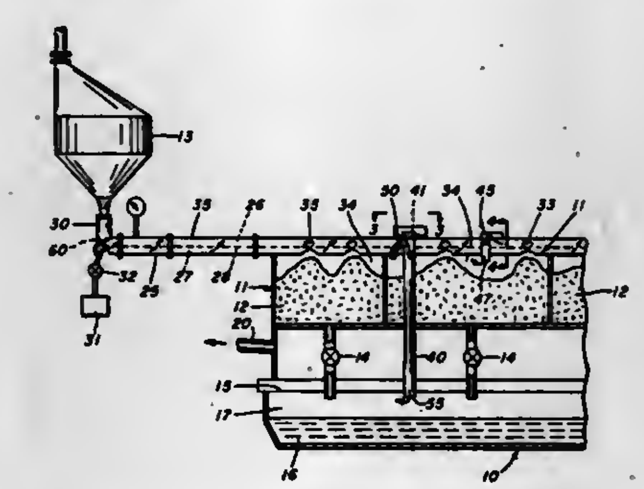

1. In combination with an electrolytic cell system comprising a chamber containing an electrolyte, a bin for storing powdered ore, means for transferring ore from the bin to the chamber and a storage tank spaced from the bin for holding ore prior to transfer to the bin;
apparatus for efficient transfer of powdered ore from the storage tank to the bin, said apparatus comprising
a fluidizing conveyor for conveying powdered ore from the storage tank to the bin;
a first vent for relieving fluid pressure from the conveyor, said first vent interconnecting the conveyor and the bin; and
a second vent for relieving fluid pressure from the bin, said second vent interconnecting the bin and the chamber.

4,299,684
DEMINERALIZATION OF COAL
Ronald Liotta, Clark, N.J., assignor to Exxon Research & Engineering Co., Florham Park, N.J.
Filed Jun. 30, 1980, Ser. No. 164,240
Int. Cl.³ C10G *1/00;* **C10B** *57/04*
U.S. Cl. 208—8 LE **20 Claims**

1. A method for comminuting and simultaneously removing mineral matter from coal or peat which method comprises:
(a) treating the coal with a quaternary base solution, thereby producing a solution containing the organic fraction of the coal and mineral matter,
(b) separating mineral matter from the organic portion of the coal by a physical separation technique based on the density differences of materials,
wherein the quaternary base solution contains at least one quaternary base represented by the formula:

R_4MOR'

where each R is the same or different group selected from the C_1 to C_{20} alkyl, aryl, acyl, arylalkyl, alkylaryl, ether, ester, as well as, sulfide, amine, heteroatoms of silicon, selenium or a metal selected from Groups IA and IIA of the Periodic Table of the Elements, M is selected from Group VA of the Periodic Table of the Elements, and R' is hydrogen or a C to C_{20} alkyl, aryl, arylakyl or alkylaryl group.

4,299,685
HYDROCRACKING OF HEAVY OILS/FLY ASH SLURRIES
Chandra P. Khulbe, 700 Bathgate Dr., #195; Ramaswami Ranganathan, 309-210 Woodridge Crescent, both of Ottawa, Ontario, and Barry B. Pruden, 32 Dalcastle Way, N.W., Calgary, Alberta, all of Canada
Filed Mar. 3, 1980, Ser. No. 126,891
Claims priority, application Canada, Mar. 5, 1979, 322744
Int. Cl.³ C10G *9/16, 47/12, 47/22, 47/26*
U.S. Cl. 208—48 AA **10 Claims**

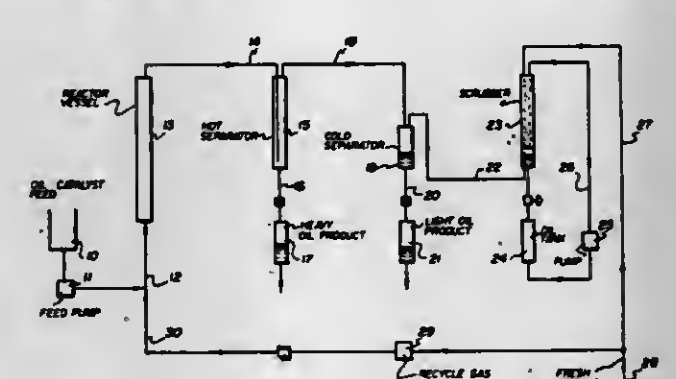

1. A process for hydrocracking a heavy hydrocarbon oil, a substantial proportion of which boils above 524° C. which comprises:
(a) passing a slurry of said heavy hydrocarbon oil and finely divided fly ash or high ash coal fines in the presence of 500–50,000 scf of hydrogen per barrel of said hydrocarbon oil through a confined hydrocracking zone, said hydrocracking zone being maintained at a temperature between about 400° and 500° C., a pressure above 500 psig. and a space velocity between about 0.5 and 4.0 volumes of heavy hydrocarbon oil per hour per volume of hydrocracking zone capacity,
(b) removing from said hydrocracking zone a mixed effluent containing a gaseous phase comprising hydrogen and vaporous hydrocarbons and a liquid phase comprising heavy hydrocarbons, and
(c) separating said effluent into a gaseous stream containing hydrogen and vaporous hydrocarbons and a liquid stream containing heavy hydrocarbons.

4,299,686
SHAPE SELECTIVE CATALYST FROM ZEOLITE ALPHA AND USE THEREOF
Guenter H. Kuehl, Cherry Hill, N.J., assignor to Mobil Oil Corporation, New York, N.Y.
Division of Ser. No. 900,850, Apr. 26, 1978, Pat. No. 4,191,663. This application Sep. 12, 1979, Ser. No. 74,586
Int. Cl.³ C10G *11/05, 47/18;* **B01J** *29/06*
U.S. Cl. 208—111 **20 Claims**

1. A catalyst produced by a method for synthesizing crystalline alumino-silicate zeolite Alpha containing platinum-group metal within the zeolite pores which comprises the steps of preparing a reaction mixture containing sources of sodium oxide, tetramethylammonium oxide, aluminum oxide, silicon dioxide, a cationic platinum-group metal complex and water and having a composition, in terms of mole ratios of oxides, falling within the following ranges:

$SiO_2/Al_2O_3 = 4.0\text{–}12.0$
$H_2O/(Na_2O + R_2O) = 15.0\text{–}40.0$
$(Na_2O + R_2O)/Al_2O_3 = 2.0\text{–}7.0$
$Na_2O/(Na_2O + R_2O) = 0.2\text{–}0.75$
$M/Al_2O_3 = 10^{-6}\text{–}0.06$

wherein R is a tetramethylammonium cation and M is a platinum-group metal, aging said mixture for from about 2 hours to about 100 hours at a temperature of from about 10° C. to about 70° C., and then heating said mixture at a temperature of from about 80° C. to about 150° C. until crystals of said zeolite are formed, and which comprises the further step of replacing, at least in part, the original sodium cations of said zeolite by ion exchange with a cation or a mixture of cations selected from the group consisting of hydrogen and metals from Groups IIA, IVA, IB, IIB, IIIB, VIB, and VIIB of the Periodic Table of Elements, and then heating said zeolite at a temperature from 480° C. to about 820° C.

11. The process of catalytically converting an organic compound charge which comprises contacting said charge under organic compound conversion conditions with a catalyst comprising a zeolite synthesized as in claim 1.

4,299,687
CARBO-METALLIC OIL CONVERSION WITH CONTROLLED $CO:CO_2$ RATIO IN REGENERATION
George D. Myers, and Lloyd E. Busch, both of Ashland, Ky., assignors to Ashland Oil, Inc., Ashland, Ky.
Filed Nov. 14, 1979, Ser. No. 94,091
Int. Cl.³ C10G *11/18*
U.S. Cl. 208—113 **40 Claims**

1. A process for economically converting carbometallic oils to lighter products, comprising:
I. providing a converter feed containing 650° F.+ material, said 650° F.+ material being characterized by a carbon residue on pyrolysis of at least about 1 and by containing at least about 4 parts per million of Nickel Equivalents of heavy metal(s);
II. bringing said converter feed together with cracking catalyst bearing substantially more than 600 ppm Nickel Equivalents of heavy metal to form a stream comprising a suspension of said catalyst in said feed and causing the resultant stream to flow through a progressive flow type reactor having an elongated reaction chamber which is at

least in part vertical or inclined for a vapor riser residence time in the range of about 0.5 to about 10 seconds at a temperature of about 900° to about 1400° F. and under a pressure of about 10 to about 50 pounds per square inch absolute sufficient for causing a conversion per pass in the range of about 50% to about 90% while producing coke in amounts in the range of about 6 to about 14% by weight based on fresh feed, and laying down coke on the catalyst in amounts in the range of about 0.3 to about 3% by weight;

III. separating said catalyst from the resultant cracking products;

IV. stripping adsorbed hydrocarbons from said separated catalyst;

V. regenerating said metals-bearing, coked catalyst by burning the coke in at least one regeneration zone with oxygen-containing combustion-supporting gas while forming combustion product gases comprising CO and/or CO_2, maintaining the $CO:CO_2$ molar ratio of the combustion product gases formed from the burning of at least the major weight portion of the coke at a level of at least about 0.25 while such gases are in heat exchange contact with the catalyst, burning sufficient coke to reduce the weight of carbon on catalyst to about 0.1% or less while limiting the amount of combustion-supporting gas supplied to the regeneration operation as a whole to less than the stochiometric amount which would be required to burn all of the carbon in the coke to CO_2, to burn all of the H_2 in the coke to H_2O and to burn any other combustibles which may be present in the coke to their respective combustion products, and restricting the combined free oxygen mole % of all gases resulting from the entire, completed combustion of coke in said regeneration zone or zones to zero or an amount substantially less than 2%; and

VI. recycling the regenerated catalyst to the reactor for contact with fresh feed.

4,299,688

FCC PROCESS USING LOW COKE-MAKE FCC CATALYST

Hosheng Tu, Shorewood, and David C. DeCoster, Countryside, both of Ill., assignors to UOP Inc., Des Plaines, Ill.

Division of Ser. No. 70,935, Aug. 29, 1979, Pat. No. 4,263,174. This application Oct. 24, 1980, Ser. No. 200,163

Int. Cl.³ C10G *11/05*; B01J *29/08*

U.S. Cl. 208—120 6 Claims

1. A process for cracking a hydrocarbon charge stock which comprises contacting said charge stock at cracking conditions with a catalytic composite manufactured by a method which comprises:

(a) preparing a catalyst powder comprising a zeolitic crystalline aluminosilicate dispersed in a porous carrier material consisting essentially of silica, zirconia and alumina;

(b) mixing said powder with a sufficient amount of an aqueous solution of a water soluble rare earth salt to form a slurry of said catalyst powder, the stoichiometric excess concentration of said rare earth salt in the solution being sufficient to impart to the final catalyst a weight ratio on a volatile free basis of rare earth ions to said carrier material greater than 1.0:100.0;

(c) filtering or centrifuging said slurry to separate therefrom a filter cake containing said catalyst powder; and

(d) calcining said filter cake without washing or drying said filter cake and recovering the resultant catalytic composite.

4,299,689

HYDROCARBON CONVERSION WITH AN ATTENUATED SUPERACTIVE MULTIMETALLIC CATALYTIC COMPOSITE

George J. Antos, Bartlett, Ill., assignor to UOP Inc., Des Plaines, Ill.

Division of Ser. No. 80,639, Oct. 1, 1979, Pat. No. 4,256,608, which is a continuation-in-part of Ser. No. 18,811, Mar. 7, 1979, Pat. No. 4,210,524, which is a continuation-in-part of Ser. No. 833,332, Sep. 14, 1977, Pat. No. 4,165,276. This application Oct. 23, 1980, Ser. No. 199,777

Int. Cl.³ C10G *35/09*

U.S. Cl. 208—139 21 Claims

1. A process for converting a hydrocarbon which comprises contacting said hydrocarbon at hydrocarbon conversion conditions with a catalytic composite comprising a combination of a catalytically effective amount of a pyrolyzed rhenium carbonyl component with a porous carrier material containing a uniform dispersion of catalytically effective amounts of a platinum group component, which is maintained in the elemental metallic state during the incorporation and pyrolysis of the rhenium carbonyl component, and of an iron component.

6. A process as defined in claim 1 wherein the porous carrier material contains a catalytically effective amount of a halogen component.

4,299,690

DEMULSIFYING PETROLEUM EMULSIONS WITH ARYL SULFONATES-OXYALKYLATED PHENOLFORMALDEHYDE RESINS AND ALKALI METAL HALIDES

Brian W. Allan, Calgary, Canada, assignor to Texaco Canada Inc., Calgary, Canada

Filed Feb. 21, 1978, Ser. No. 879,429

Int. Cl.³ C10G *33/04*

U.S. Cl. 208—188 7 Claims

1. In a process for recovering oil from oil-in-water emulsions stabilized by clay and other solids comprising the steps of: subjecting said emulsions to the action of an effective amount of non-ionic, water-soluble, aryl sulfonates-oxyalkylated phenolformadehyde resins; the improvement consisting of adding brine to the resulting mixture in an amount sufficient to increase the specific gravity of the resulting aqueous phase by at least 0.02 whereby said oil rises above said phase; and, allowing the resulting system to remain in the quiescent state for about 1 to about 10 hours.

4,299,691

REMOVAL OF PHENOLS FROM PHENOL-CONTAINING STREAMS

Herbert W. Dougherty, Cranford, and Richard H. Schlosberg, New Providence, both of N.J., assignors to Exxon Research & Engineering Co., Florham Park, N.J.

Filed Nov. 5, 1980, Ser. No. 204,309

Int. Cl.³ C10G *29/16*

U.S. Cl. 208—263 36 Claims

11. A process for separating phenols from a phenol-containing coal liquid and regenerating the phenols, the process which comprises:

(a) contacting the coal liquid with a multivalent metal composition selected from the group consisting of oxides and/or hydroxides of one or more multivalent metals capable of forming hydroxy metal phenates with phenols of the stream, wherein said contacting is performed at temperatures lower than the decomposition temperature of the hydroxy metal phenates;

(b) separating the hydroxy metal phenates from the treated stream;

(c) reacting the hydroxy metal phenates, at a temperature from about 50° C. to about 400° C., with one or more alcohols selected from the group consisting of the C_1 to C_{10} aliphatic primary alcohols and the C_7 to C_{16} arylalkyl primary alcohols, thereby forming phenols and hydroxy metal alcoholates; and

(d) heating the hydroxy metal alcoholates to their decomposition temperature, thereby forming the primary alcohol(s) and oxides of the multivalent metal.

4,299,692

APPARATUS FOR HANDLING A MOLD BOX IN A VACUUM CASTING SYSTEM

Albert Musschoot, Barrington, Ill., assignor to General Kinematics Corporation, Barrington, Ill.

Filed Aug. 4, 1980, Ser. No. 175,013

Int. Cl.³ B07B *1/28*

U.S. Cl. 209—1 2 Claims

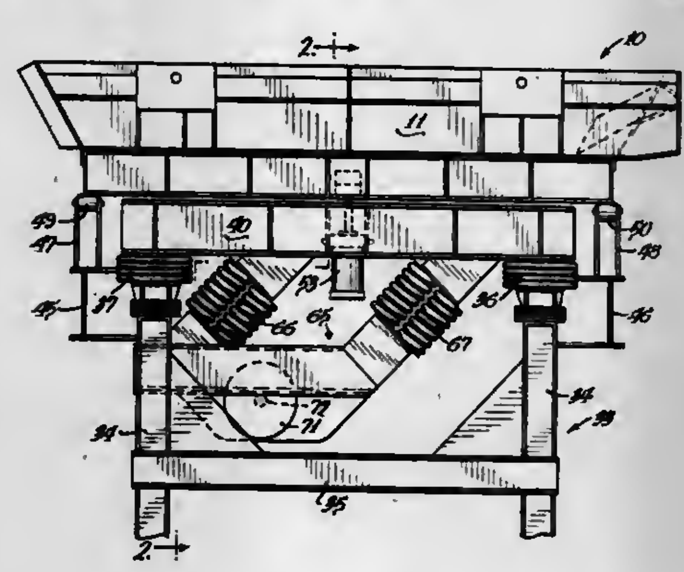

1. Apparatus for removing casting sand from a casting in a box in a vacuum casting system comprising two spaced parallel elevated track-forming means, a box having a portion adapted to ride on the track-forming means, a base, extensible means mounted on the base between and below the track-forming means, a platform carried by the extensible means in a position below and between said track-forming means, means on the platform for clamping the box thereto, means for extending the extensible means to move the platform upwardly between the track-forming means to lift the box off the tracks, said means for extending being arranged to move one side of the platform upwardly a greater distance than the other side to place the box in a tilted attitude, an exciter member, a plurality of springs secured at their upper end to the platform and extending downwardly therefrom at an acute angle to the horizontal, the lower end of the springs being secured to and supporting the exciter member, and means for vibrating the exciter member.

4,299,693

SEPARATOR

Jerome I. Paulson, Spring, Tex., assignor to Allied Industries, Houston, Tex.

Filed Apr. 30, 1980, Ser. No. 145,378

Int. Cl.³ B07B *7/04*

U.S. Cl. 209—3 7 Claims

1. Apparatus for separating a pellet-like product from fines mixed therewith comprising:

a housing having a fines outlet and a product outlet disposed at a lower portion of said housing;

an inlet conduit extending into said housing for supplying said product and said fines entrained in a propellant fluid, said inlet conduit terminating in a nozzle;

an imperforate baffle disposed within said housing and having an impact surface spaced away from and facing said nozzle, said baffle located to intercept substantially all of said product issuing from said nozzle, said baffle sized to allow said propellant fluid to flow past said baffle to said fines outlet; and

means located externally of said product and fines entrained in said propellant fluid for generating an electric charge neutralizing magnetic field, said field generating means located spatially with respect to said impact surface of said imperforate baffle so that said field completely envelops

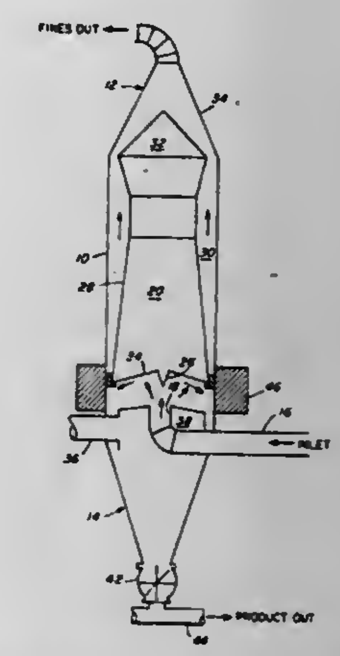

said product and fines entrained in said propellant fluid at a position before said product impinges on said baffle whereby separation of said product and said fines is improved.

4,299,694

METHOD AND APPARATUS FOR CHAR SEPARATION FROM THE DISCHARGE MATERIALS OF AN IRON OXIDE REDUCING KILN

Thomas W. Goodell, Harriman, Tenn., assignor to The Direct Reduction Corporation, New York, N.Y.

Filed Aug. 25, 1980, Ser. No. 180,941

Int. Cl.³ B07B *4/02*

U.S. Cl. 209—139 R 11 Claims

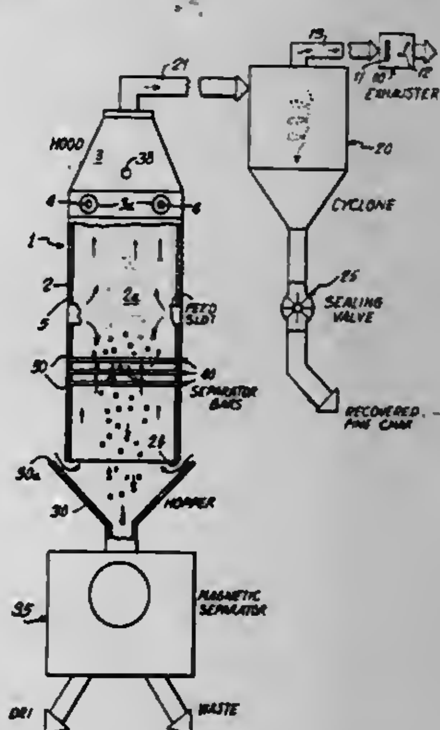

1. An elutriation device comprising:

chamber means for defining an air flow path;

means for producing air flow through said chamber means along said path;

means for admitting a mixture of particulate materials into a zone within said chamber means along said path;

means disposed across said chamber means for controlling the rate and turbulence of said air flow in said zone to separate the lighter particles from the heavier particles in said mixture, the lighter particles being carried by said

flow and the heavier particles falling through it, said controlling means comprising:

a plurality of rod-like members arranged in three sets, one set being disposed between the other two sets; and

means for permitting adjustment of the spacing between said other two sets and said one set;

means disposed beneath said chamber means for receiving said falling heavier particles; and

means for collecting the separated lighter particles.

10. A method for separating fine char particles from the mixture of fine particles found in the discharge materials from a coal-fired direct reduction process comprising the steps of:

introducing the mixture of particles in a substantially evenly distributed flow into an upwardly flowing air stream;

adjusting the velocity and turbulence of the air stream in the zone of the air stream into which the particle mixture is introduced such that the lighter char particles are carried upwardly with the air stream, while the other heavier particles in the mixture fall by gravity downwardly through the air stream;

receiving the downwardly falling heavier particles in a hopper; and

removing and collecting the lighter char particles from the air stream by means of a low-efficiency cyclone.

4,299,695

ROCK GRADER WITH TILTING SORTER SCREEN

Folke Boström, Lingonstigen 26, S-930 70 Mala, Sweden

Filed Aug. 15, 1980, Ser. No. 178,424

Int. Cl.³ B07B *1/28*

U.S. Cl. 209—260 **5 Claims**

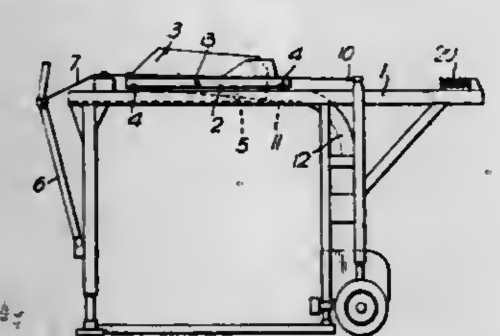

1. A grading plant including a self-cleaning screen for receiving lump materials and retaining oversize fractions thereof above a predetermined size, movement means for displacing the screen from a horizontal sorting position to a vertical discharging position and back to the sorting position, and tracks for guiding the screen during its displacement, said tracks having a horizontal portion and a curved, downwardly directed portion connected to the horizontal portion, comprising: a carriage (2), bearings (13) for pivotally supporting the screen (3) approximately in a lateral center of gravity axis in the sides of the carriage, wheels (4) attached to the sides of the carriage in rolling engagement with fixed horizontal beams (1) of the grading plant below the sides of the carriage to enable its horizontal displacement, and two wheels (5) attached to the rear end of the screen and individually guided in the tracks provided with each horizontal beam, the screen being in a position for discharging the retained fractions when the wheels (5) are in a lower part of the curved portion (12) of the tracks, and in a sorting position when the wheels are in a forward part of the horizontal portion (11) of the tracks.

4,299,696

FLUID FILTERING DEVICE

Borje O. Rossen, 4031 Thornoaks Dr., and Dale P. Fosdick, 3000 Hunting Valley Dr., both of Ann Arbor, Mich. 48104

Continuation of Ser. No. 936,071, Aug. 23, 1978, abandoned. This application Mar. 4, 1980, Ser. No. 127,227

Int. Cl.³ B01D *27/10, 35/02*

U.S. Cl. 210—120 **10 Claims**

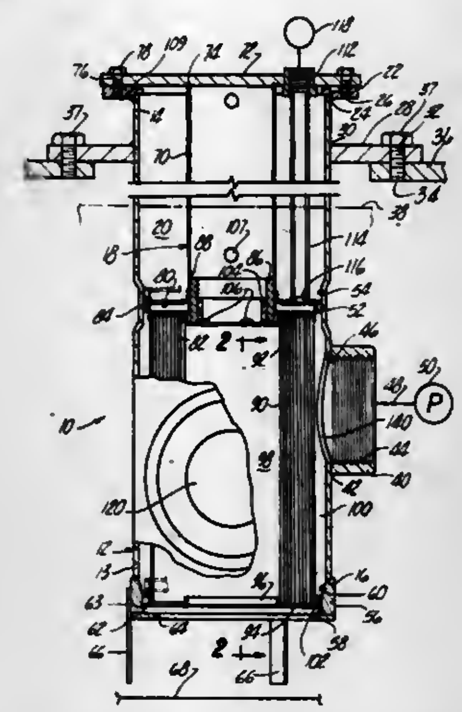

1. A fluid filtering device for use with a fluid reservoir in which fluid is contained, said filtering device comprising:

an elongated tubular cylindrical housing open at each end and positioned within said reservoir so that one end of said housing is submerged within said fluid while the other open end of said housing is positioned above said fluid, said housing having a fluid outlet formed on one side and below the fluid level in the reservoir;

an elongated filter assembly, said filter assembly comprising an elongated tubular extension and tubular cylindrical filter element open at one end, means for detachably coaxially connecting one end of the tubular extension to the other end of the filter element, said filter assembly being axially insertable into said housing so that said filter element is positioned at the lower end of said housing and spaced radially inwardly from said housing thus forming an annular chamber in fluid communication with the housing fluid outlet and wherein said filter element is open to the reservoir only through said one end of the filter element;

means for fluidly sealing both axial ends of said filter element to said housing;

means for securing the other end of said extension tube to said housing;

air vent means formed between the interior of said filter element and the interior of said extension tube; said air vent means comprising a fluid port formed through the other end of said filter element, said port being open to the interior of said filter element and also to the interior of said tubular extension;

a valve operatively connected with said port, said valve being normally open and including means for automatically closing when the fluid fills the interior of the filter element;

a fluid passageway for fluidly connecting the interior of the tubular extension to the exterior of said housing, said fluid passageway being continuously open between said interior of the extension tube and the exterior of the housing.

10. A fluid filtering device for use with a fluid reservoir in which fluid is contained, said filtering device comprising:

an elongated tubular cylindrical housing open at each end and positioned within said reservoir so that one end of said housing is submerged within said fluid while the other open end of said housing is positioned above said fluid, said housing having a fluid outlet formed on one side and below the fluid level in the reservoir;

an elongated filter assembly, said filter assembly comprising an elongated tubular extension and tubular cylindrical filter element open at one end, means for detachably coaxially connecting one end of the tubular extension to the other end of the filter element, said filter assembly being axially insertable into said housing so that said filter element is positioned from said housing thus forming an annular chamber in fluid communication with the housing fluid outlet;

means for fluidly sealing both axial ends of said filter element to said housing;

means for securing the other end of said extension tube to said housing;

air vent means formed between the interior of said filter element and the interior of said extension tube; said air vent means comprising a fluid port formed through the other end of said filter element, said port being open to the interior of said filter element and also to the interior of said tubular extension;

a valve operatively connected with said port, said valve being normally open and including means for automatically closing when the fluid fills the interior of the filter element;

a fluid passage means for fluidly connecting the interior of the tubular extension to the exterior of said housing,

normally closed bypass means for bypassing said filter element, said bypass means comprising a tubular bypass housing secured at one end to said tubular cylindrical housing at a position below the fluid level in the reservoir so that said bypass housing registers with an opening in the tubular cylindrical housing and is open to said annular chamber and so that said bypass housing extends outwardly from said cylindrical housing, a valve seat secured to the other end of the bypass housing, a valve member cooperating with the valve seat, and means for urging said valve member against the valve seat wherein one side of the valve member is open to the reservoir while the other side of said valve member is open to the annular chamber and wherein said bypass means is wholly positioned outside of the interior of said tubular cylindrical housing.

4,299,697

LIQUID CONTAINMENT AND STORAGE SYSTEM FOR RAILROAD TRACK

Marino Curati, Jr., Geneva, Ohio, assignor to True Temper Corporation, Cleveland, Ohio

Filed Jun. 29, 1979, Ser. No. 53,705

Int. Cl.³ B01D *21/02*

U.S. Cl. 210—532.1 **17 Claims**

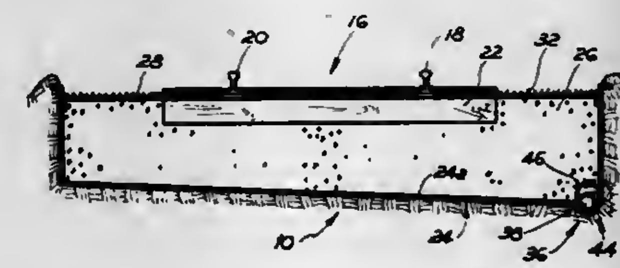

1. A system for catching and storing liquid such as spilled petroleum based oil, along a railroad track section, so as to prevent such liquid from contaminating adjacent land areas, comprising, a railroad track section including spaced rails, a walled containment reservoir generally underlying said track section, defining an upwardly opening containment space and including a flexible liquid impervious liner, for catching liquid spilled along said track section, said liner comprising a layer of liquid pervious fabric material having on at least one of its sides an attached layer of liquid impervious material, such as rubber which is resistant to oil degradation, a relatively coarse particle bed located on said liner and filling said containment space, said bed supporting said track section, a layer of liquid pervious flexible fabric filter material supported on said bed and covering the open top of said bed, said reservoir including drain means comprising an apertured drain member, such as a drain pipe, for removing liquid from said reservoir, and conduit means disposed generally adjacent the lowermost level of said containment space and coacting in liquid communicating relation with said drain member, said conduit means extending through the reservoir wall defined by said liner, filter means coacting with said drain member for filtering liquid adapted to pass thereinto from said containment space, and sealing means coacting between said liner and said conduit means for preventing inadvertent escape of liquid into the adjacent land areas past said liner at said location of extension of said conduit means through the reservoir wall, a storage reservoir spaced from said containment reservoir for storing liquid, and means coacting between said conduit means of said containment reservoir and said storage reservoir for transferring liquid caught by said containment reservoir to said storage reservoir.

4,299,698

CIRCUIT AND APPARATUS FOR CONTROLLING A WATER SOFTENER

Stanley F. Rak, Mundelein; Donald P. DeVale, Sycamore, and Roger Rehfeldt, Vernon Hills, all of Ill., assignors to Culligan International Company, Northbrook, Ill.

Filed Oct. 21, 1980, Ser. No. 199,308

Int. Cl.³ B01J *49/00*

U.S. Cl. 210—96.1 **5 Claims**

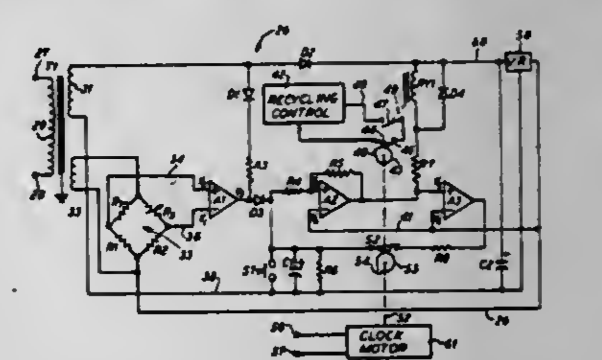

1. Apparatus for regenerating the ion exchange bed of a water softener having a regenerating means and a recycling control connected to control the regenerating means comprising, a first pair of resistors, two pairs of spaced electrodes and at least one mounted in the ion exchange bed, one providing a reference and the other sensing, a bridge circuit including said pairs of electrodes and said first pair of resistors, an A.C. power supply signal applied to said bridge circuit, a first comparator receiving a first input from said bridge circuit from the junction point between said reference electrodes and one of said first pair of resistors and a second input from said bridge circuit from the junction point between the other one of said first pair of resistors and said sensing electrodes, a relay with switch contacts operated by said first comparator, a latching circuit connected to said relay to maintain it energized, a timing means capable of being set to selected time periods, and a recycle switch controlled by said timing means and said recycle switch and the switch contacts of said relay connected in circuit with said recycling control including a reset switch connected to said latching circuit for resetting it and wherein said reset switch is controlled by said timing means to reset said latching circuit after said ion bed has been regenerated and including a time delay circuit connected between said first comparator and relay so that said relay is operated only if the output of said first comparator indicates that regeneration should occur for a fixed time period.

4,299,699
BACKWASHABLE HELICAL-MEDIA COALESCER
Marc A. Boogay, 1897 Arroyo Ave., Oceanside, Calif. 92045
Filed Oct. 14, 1980, Ser. No. 195,893
Int. Cl.³ B01D *29/14*
U.S. Cl. 210—143 **13 Claims**

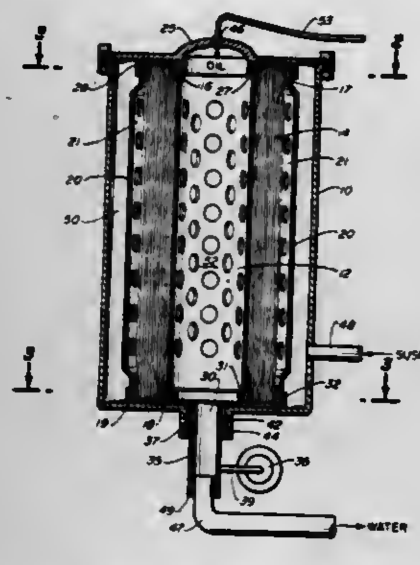

1. Apparatus for coalescing/filtering liquid-in-liquid suspensions (such as oil-in-water) to separate the liquids and remove solid and particulate matter therefrom, comprising:

a. a hollow porous cylindrical armature;

b. a coalescing/filtration media composed of a large number of individual strands of yarn-like material formed into a cylindrical-shaped assembly; said yarn-like strands lying substantially in the direction of the axis of the cylindrical-shaped media assembly and being secured together at either of the ends thereof by media fastening means;

c. said cylindrical-shaped media assembly being positioned about the outer surface of said hollow porous cylindrical armature with the opposite ends thereof held apart to keep said yarn-like strands slightly taut;

d. a pressure tank for housing said hollow porous cylindrical armature and said cylindrical-shaped media assembly;

e. means for positioning said hollow porous armature with said cylindrical-shaped media assembly thereabout substantially centrally within said pressure tank and for securing one end of said media assembly from rotation at one end of said pressure tank;

f. a control fitting positioned at the opposite end of said pressure tank; said control fitting having a tubular outlet passageway depending therefrom which passes out through an annular fitting at said opposite end of said pressure tank; said control fitting operable to be sealingly rotated within said annular fitting;

g. the opposite end of said cylindrical-shaped media assembly about said armature being secured to said control fitting for rotational movement thereof when said control fitting is rotated;

h. said hollow porous cylindrical armature forming a central chamber between one end of said pressure tank and said control fitting; said control fitting tubular outlet communicating with one end of said chamber for drawing off a separated liquid; said one end of said pressure tank adjacent said one end of said assembly having a reservoir formed therein; said reservoir having an outlet thereon for drawing off a different separated liquid;

i. an outer chamber area formed between the outside of said cylindrical-shaped media assembly and about the inner surface of said pressure tank; an inlet means for introduction into said outer chamber of liquid-in-liquid suspension to be separated;

j. means for rotating said control fitting and thus rotate one end of said cylindrical-shaped media assembly thereby twisting said yarn-like strands helically about said hollow porous cylindrical armature for coalescing and filtering a liquid-in-liquid suspension which is introduced into said pressure tank and which flows from said outer chamber through the coalescing filtration strands of said cylindrical-shaped media assembly and porous armature to said central chamber where the separated liquids can be drawn off at either end of said pressure tank; the degree of helically twisting said yarn-like strands tightly about said porous armature being operable to control the media pore size thereby allowing adjustment of flow control and filtering properties by varying the torque applied to said control fitting;

k. releasing the torque and thus loosening of the yarn-like strands during a backwash mode allowing said yarn-like strands to expand and strum during reverse flow of liquid therethrough for cleaning and removal of solids and particulate matter.

4,299,700
MAGNETIC WATER CONDITIONER
Charles H. Sanderson, 3717 Fritcha Ave., Fort Wayne, Ind. 46806
Continuation of Ser. No. 18,736, Mar. 8, 1979, abandoned, which is a continuation-in-part of Ser. No. 798,854, May 20, 1977, Pat. No. 4,153,559. This application Feb. 14, 1980, Ser. No. 121,646
Int. Cl.³ B01D *35/06*
U.S. Cl. 210—222 **7 Claims**

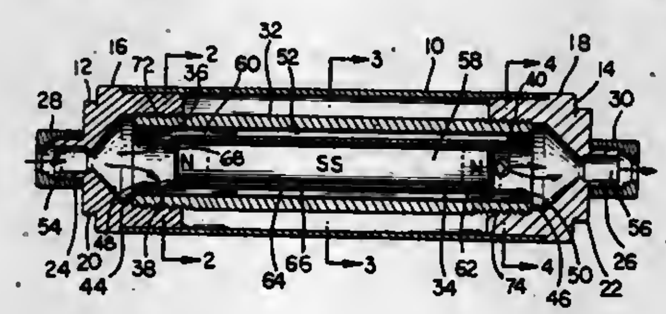

1. A device for the treatment of water comprising:

an elongated tubular intermediate casing of magnetic material, said casing having an inner surface,

an elongated magnet having opposite ends and at least two axially spaced poles,

an inner casing of non-magnetic material encasing said magnet, said inner casing including inner and outer surfaces extending longitudinally with respect thereto,

said inner casing including open tubular end portions extending beyond opposite ends of said magnet,

said inner casing and magnet being positioned longitudinally within said intermediate casing,

means for supporting said inner casing within said intermediate casing and spacing said inner casing from said intermediate casing surface so as to form an annular chamber therebetween, said means for supporting comprising a pair of tapered elastic sleeves of non-magnetic material being positioned over opposite ends of said inner casing between said inner casing outer surface and said intermediate casing inner surface,

the ends of said inner casing being flared outwardly so as to tightly compress said sleeve between the flared ends of said inner casing and the inner surface of said intermediate casing, said sleeves being in tight frictional engagement with said intermediate casing and the flared ends of said inner casing,

an aperture in each of said tubular end portions extending into said annular chamber,

inwardly projecting locking means on the inner surface of said inner casing respectively positioned between said magnet and said apertures for limiting relative axial movement between said magnet and said inner casing, and outwardly projecting locking means on the outer surface of said inner casing between respective said sleeves and said apertures for limiting relative axial movement between said inner casing and said sleeves,

each of said apertures having a first end and a second end spaced axially outward from said first end,

said inwardly projecting locking means comprising inwardly deformed portions of the perimeters of said aperture first ends forming inwardly projecting locking ears,

said outwardly projecting locking means comprising outwardly deformed portions of the perimeters of said aperture second ends forming outwardly projecting locking ears, and

a fluid inlet fitting secured to one end of said intermediate casing and a fluid outlet fitting secured to the other end of said intermediate casing.

4,299,701
MAGNETIC FLUID TREATING APPARATUS
Raymond K. Garrett, and John G. Fifield, both of Billings, Mont., assignors to Dynaflex, Billings, Mont.
Filed Jan. 25, 1980, Ser. No. 115,211
Int. Cl.³ B01D *35/06*
U.S. Cl. 210—222 **7 Claims**

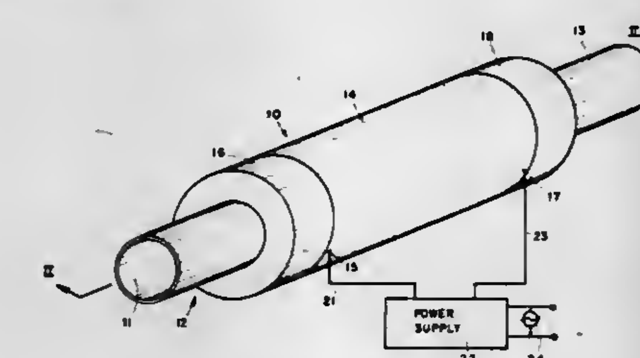

1. A water treating apparatus comprising:

a conduit of nonmagnetic material for the passage of water to be treated;

a coil coaxial with and surrounding said conduit;

a pair of pole pieces positioned in spaced relationship to one another at opposite ends of said coil,

a plurality of ferromagnetic spheres each having a diameter greater than one-half the inner dimension of said conduit fixedly positioned in said conduit in the space surrounded by said coil and adjacent said pole pieces, said spheres positioned in alternately staggered relationship to define a tortuous fluid flow path through said conduit; and

power supply means coupled to said coil for providing pulsed DC current to said coil such that an interrupted magnetic field is provided with nodes at said pole pieces and said spheres to treat water passing through said conduit.

4,299,702
LIQUID SEPARATION APPARATUS
Riyoichi Bairinji, Ohtsu; Tatsuo Kawabata, Kyoto, and Tatsando Tanaka, Ohtsu, all of Japan, assignors to Toray Industries, Inc., Tokyo, Japan
Filed May 16, 1979, Ser. No. 39,651
Claims priority, application Japan, May 22, 1978, 53-60066
Int. Cl.³ B01D *31/00*
U.S. Cl. 210—433.2 **12 Claims**

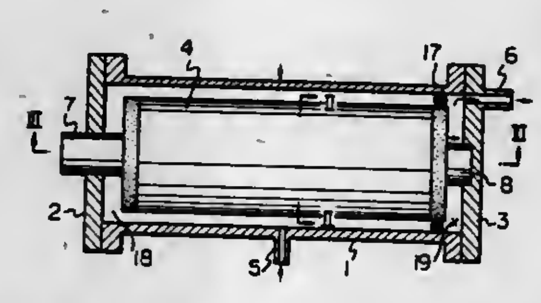

1. In a liquid separation apparatus of spiral type including a membrane module comprising, a hollow mandrel having a hole or axially aligned holes on the outer circumference thereof, at least one pair of semipermeable membrane sheets, and at least one pair of first and second spacing layers, said membrane sheets being spaced apart from each other by said spacing layers and spirally wound about said mandrel to form, with said first spacing layer, a first passage for a permeated solution between the opposite inner surfaces of said sheets and to form, with said second spacing layer, a second passage for a feed solution between the opposite outer surfaces of said sheets, said first passage being closed at the outer edges of the entire lengths of said sheets and having an outlet opening elongated in the axial direction at the inner edges of the entire lengths of said sheets to communicate with the interior of said mandrel through said hole thereof, said second passage having a first opening elongated in the axial direction at the outer edges of the entire lengths of said sheets and a second opening at the spiral edges of said sheets in the vicinity of the surface of said mandrel, said first and second passages being closed at the opposite spiral edges of said sheets over most of the spiral lengths except for the partial lengths where said second opening is formed; the improvement wherein said second spacing layer for said feed solution consists of an inner layer portion, having a specific length in the direction perpendicular to the axis, in the vicinity of said mandrel and the remaining outer layer portion communicating with said first opening, said inner layer portion having an axial sectional area substantially larger than an axial sectional area of said outer layer portion.

4,299,703
SEPARATOR FOR SEPARATING A MIXTURE OF TWO LIQUIDS
Christian Bezard, Saint Ismier, and Patrick Deroyer, Sassenage, both of France, assignors to Alsthom-Atlantique, Paris, France
Filed May 23, 1980, Ser. No. 152,964
Claims priority, application France, May 23, 1979, 79 13111
Int. Cl.³ B01D *35/00*
U.S. Cl. 210—512.1 **8 Claims**

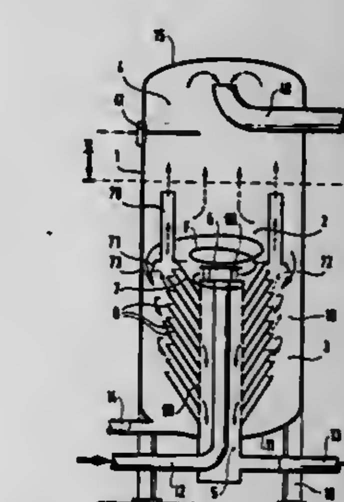

1. A separator for separating a mixture of two immiscible liquids of different densities, one of these being dispersed in the other, said separator including, superposed in a cylindrical tank, an injection chamber for injecting the mixture and disposed between a coalescence chamber and a collecting chamber for collecting the dispersed component, a tubular collector for collecting the continuous phase, said coalescence chamber being arranged concentrically around said tubular collector, a deflector separating said coalescence chamber and said injection chamber and forming an annular passage for communicating said injection chamber with the coalescence chamber, said annular passage being formed between the wall of the tank and the periphery of said deflector, funnels surrounding said deflector for communicating the coalescence chamber with the collecting chamber, said injection chamber being provided with a static central injector having vanes for imparting a centrifugal rotating motion to the mixture, a first pipe penetrating the collector and extending axially therethrough for feed-

ing the mixture of the two liquids and opening to the vanes of said static central injector, a second pipe situated at the top of the tank for evacuation of the dispersed phase and a third pipe opening to the base of the collector for evacuation of the continuous phase.

4,299,704

METHOD FOR REMOVING POLYCHLORINATED BIPHENYLS FROM CONTAMINATED TRANSFORMER DIELECTRIC LIQUID

Stephen D. Foss, Pittsfield, Mass., assignor to General Electric Company

Filed May 19, 1980, Ser. No. 151,152

Int. Cl.³ B01D *11/04*

U.S. Cl. 210—634 **13 Claims**

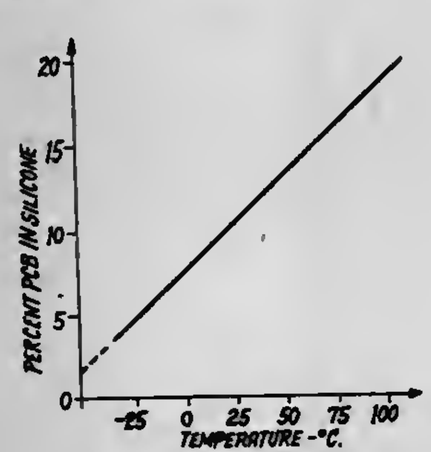

1. A method for removing polychlorinated biphenyl from transformer windings comprising the steps of:

heating a transformer winding containing polychlorinated biphenyl in a transformer containing silicone fluid dielectric to a temperature range of 70° C. to 90° C. to promote the removal of said biphenyl from said winding and to increase the solubility of said biphenyl within said silicone fluid;

removing a portion of said heated biphenyl-silicone fluid mixture from said transformer;

cooling said removed biphenyl-silicone fluid mixture to less than 50° C. to cause some of said biphenyl to separate from said mixture; and

removing said separated biphenyl from said mixture.

4,299,705

METHOD OF TREATING BLOOD DURING OPERATIVE PROCEDURES

Richard T. Russell, 1180 Akard Dr., Reno, Nev. 89503

Filed Sep. 7, 1979, Ser. No. 73,189

Int. Cl.³ B01D *13/00*; A61M *1/03*

U.S. Cl. 210—647 **3 Claims**

1. The method for removing foreign fluids from blood during operative procedures including: (1) passing blood mixed with fluids from a patient's body through a bubble oxygenator; (2) dividing the mixture of blood and fluid so as to return a first portion to the patient's body and divert a second portion to an artificial membrane kidney; (3) collecting the filtrate which is not blood from the artificial membrane kidney; and (4) returning the second portion less the filtrate to the bubble oxygenator.

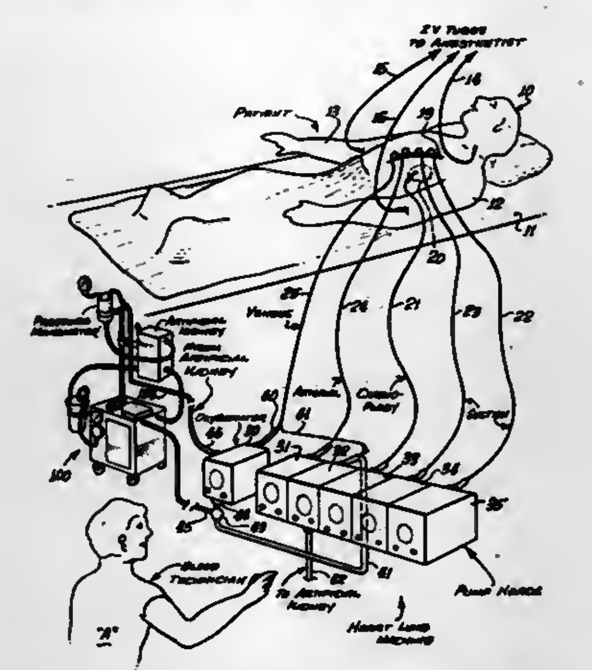

4,299,706

SEPARATION OF A SUSPENSION OF TWO IMMISCIBLE FLUIDS

Peter B. Smith, Holmes Chapel, England, assignor to Fram Europe Limited, Great Britain

Filed Nov. 26, 1979, Ser. No. 97,226

Claims priority, application United Kingdom, Nov. 24, 1978, 46046/78

Int. Cl.³ B01D *21/10*

U.S. Cl. 210—649 **8 Claims**

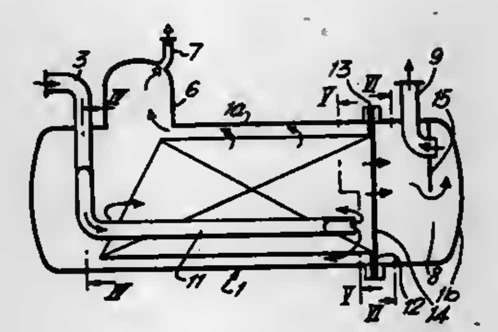

6. A method for separating the denser and less dense components of a suspension of two immiscible fluid components, the method comprising causing the less dense component to disentrain by causing the fluid to pass by tortuous passage through a separation means, and separating such disentrained less dense component, the method being characterised in that incoming fluid is subject first to flow division then discharged at a location external of but near the downstream end of the separation means and then subjected to flow reversal twice before passing into the upstream end of the separation means.

4,299,707

APPARATUS FOR FILTERING MELTED PLASTIC

Clayton L. Neuman, Coon Rapids, Minn., assignor to A-1 Engineering, Inc., Minneapolis, Minn.

Filed Apr. 7, 1980, Ser. No. 138,194

Int. Cl.³ B01D *29/38*

U.S. Cl. 210—791 **24 Claims**

1. Apparatus for filtering a flow of melted plastic, comprising:

(a) a housing defining an internal chamber and having an inlet for unfiltered plastic and an outlet for filtered plastic, each communicating with said internal chamber, and

exhaust port means for discharging material filtered from the flow of plastic;

(b) a filter element disposed in said internal chamber and defining an inlet chamber communicating with said inlet and an outlet chamber communicating with said outlet;

(c) said filter element having a surface of predetermined configuration on its inlet side;

(d) filter cleaning means conforming to the configuration of the inlet side surface of the filter element and engageably movable thereover to wipe filtered material from said inlet side surface;

(e) the filter cleaning means being movable from a first position remote from the filter element through a second

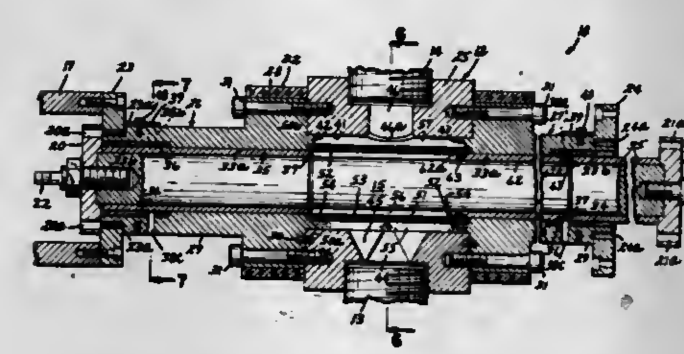

position in which it substantially overlies the filter element and blocks all but a portion of the flow of melted plastic through the filter element, and to a third position beyond the second in which the filter cleaning means communicates with the exhaust port means;

(f) means for moving the filter cleaning means from the first position to the second position to wipe filtered material from said inlet side surface;

(g) the filter cleaning means being constructed and disposed so that it exposed to said portion of the flow of melted plastic in said second position and movable thereby to said third position to forceably discharge the filtered material from the exhaust port means.

4,299,708

FIRE-EXTINGUISHING OR FIRE-PREVENTIVE COMPOSITION

Trevor M. James, 65 Herbert St., Pontardawe, Swansea, Wales

Filed May 23, 1979, Ser. No. 41,749

Claims priority, application United Kingdom, May 25, 1978, 22566/78

Int. Cl.³ A62D *1/00*; C09K *3/28*

U.S. Cl. 252—2 **3 Claims**

1. A fire extinguishing or fire-preventive composition comprising sawdust in loose, dry, particulate form having dispersed or incorporated therein sodium chloride in powder form and a dry powdered colouring material including calcium sulphate and a substance selected from the group consisting of a transition metal oxide and an organic dyestuff forming a stable complex with cellulose, or glucose units in cellulose, as present in said sawdust, at elevated temperatures.

4,299,709

TRACER FLUIDS FOR ENHANCED OIL RECOVERY

Walter H. Carter, Houston, and Jerry L. Sides, Stafford, both of Tex., assignors to Texaco Inc., White Plains, N.Y.

Division of Ser. No. 37,588, May 9, 1979, Pat. No. 4,231,426. This application Nov. 19, 1979, Ser. No. 95,702

Int. Cl.³ E21B *43/22, 47/00*

U.S. Cl. 252—8.55 D **4 Claims**

1. An aqueous tracer fluid comprising water having dissolved therein, a tracer amount from 0.01 to 10.0% by weight of a nitrate salt selected from the group consisting of sodium nitrate, lithium nitrate, potassium nitrate, ammonium nitrate and mixtures thereof, and a bactericidal amount in the range from 10 to 2000 parts per million of an aromatic treating reagent having the following formula:

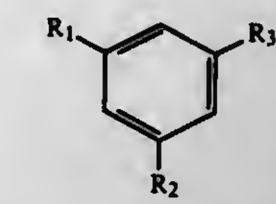

wherein R_1, R_2, and R_3 are each hydrogen, methyl or C_2 to C_5 alkyl.

3. An aqueous tracer fluid comprising water having dissolved therein, a tracer amount in the range from 0.005 to 10.0% by weight of a C_1 to C_5 alkanol and a bactericidal amount in the range from 10 to 2000 parts per million of an aromatic treating reagent having the following formula:

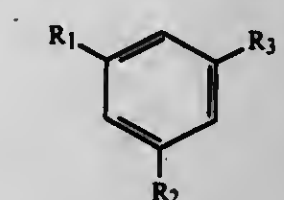

wherein R_1, R_2 and R_3 are each hydrogen, methyl, or C_2 to C_5 alkyl, the total number of carbon atoms in R_1, R_2 and R_3 being from 0 to 5.

4,299,710

DRILLING FLUID AND METHOD

Jean Dupre, Levittown, and William M. Hann, Roslyn, both of Pa., assignors to Rohm and Haas Company, Philadelphia, Pa.

Filed May 30, 1975, Ser. No. 582,467

Int. Cl.³ C09K *7/02*

U.S. Cl. 252—8.5 A **6 Claims**

1. A viscous aqueous alkaline drilling fluid containing thickeners consisting essentially of the combination of:

(a) a solubilized addition copolymer of an ethylenically unsaturated carboxylic acid with at least one other addition polymerizable ethylenically unsaturated monomer, said copolymer having a molecular weight, Mv, of from about 250,000 to 5,000,000 and having an equivalent weight per carboxyl group as defined herein of from over 100 to about 250, and

(b) a water soluble macromolecular polysaccharide capable of thickening aqueous systems, said polysaccharide selected from at least one hydroxyethyl cellulose and hydroxypropyl cellulose and having a thickening efficiency such that a solution of 2 percent by weight in distilled water provides a fluid having a Brookfield viscosity at 22° C. of from 3,000 to 200,000 centipoises, the pH of the system being alkaline and from about 7 to 14, the weight ratio of (a) to (b) being from 10 to 90 parts of (a) to from 90 to 10 parts of (b), the quantity of (a) plus (b), in the drilling fluid, being between 0.1 to 5 pounds per barrel of drilling fluid and being such as to effect a Fann viscosity of between 5 and 30 cps. at 600 r.p.m. and 22° C., the fluid components remaining chemically stable under alkaline conditions and being effective in salt brines, and the alkalinity is provided by at least one of sodium carbonate and sodium hydroxide.

4,299,711
SURFACTANT WATERFLOODING ENHANCED OIL RECOVERY PROCESS
Timothy N. Tyler, and Jack H. Park, both of Houston, Tex., assignors to Texaco Inc., White Plains, N.Y.
Filed Dec. 3, 1979, Ser. No. 99,947
Int. Cl.³ E21B *43/22*
U.S. Cl. 252—8.55 D 14 Claims

1. In a method of recovering petroleum from a subterranean, petroleum-containing formation penetrated by at least one injection well and by at least one spaced-apart production well, comprising injecting into the formation an aqueous fluid containing, as the sole anionic surfactant, an ethoxylated and sulfonated surfactant having the following formula:

$RO(R'O)_xR''SO_3^-M^+$

wherein R is an 8 to 24 carbon atom alkyl group or an alkylaryl consisting of benzene, toluene, or xylene having attached thereto at least one 6 to 18 carbon atom alkyl group; R' is ethylene or a mixture of ethylene and higher alkylene with relatively more ethylene than higher alkylene; x is a number representing the average number of alkoxy units in the range from 2 to 10; R'' is ethylene, propylene, hydroxypropylene, or butylene; O is oxygen; S is sulfur; and M is a monovalent cation; or an ethoxylated and sulfated surfactant having the following formula:

$RO(R'O)_xSO_3^-M^+$

wherein R, O, R', x, S, and M have the same meaning as above, said surfactant fluid displacing petroleum through the formation to the producing well from which it is recovered to the surface of the earth, the improvement for determining the precise value of x which comprises:

(a) preparing a series of aqueous fluids having constant salinity and surfactant concentration, the salinity value being about the same as the salinity of the water present in the formation, the samples containing surfactant of varying degrees of ethoxylation,
(b) measuring the electrical conductivity of the samples,
(c) creating a graphical representation of electrical conductivity versus degree of ethoxylation,
(d) identifying the degree of ethoxylation corresponding to the first inflection point in the electrical conductivity versus the degree of ethoxylation curve as the degree of ethoxylation is decreased from a value less than the degree of ethoxylation which causes solubilization of the surfactant in the aqueous saline fluid to a value greater than the minimum degree of ethoxylation which accomplishes solubization, and (e) employing as said sole anionic surfactant one in which the average degree of ethoxylation is numerically from 0.2 less that to 0.1 greater than the degree of ethoxylation corresponding to said first inflection point of electrical conductivity.

4,299,712
EPOXIDE OR EPISULFIDE POLYMER-BASED HOT MELT METAL WORKING LUBRICANTS
Donald I. Hoke, Chagrin Falls, Ohio, assignor to The Lubrizol Corporation, Wickliffe, Ohio
Division of Ser. No. 15,398, Feb. 26, 1979, Pat. No. 4,237,188. This application May 23, 1980, Ser. No. 152,911
Int. Cl.³ C10M *1/28*
U.S. Cl. 252—52 A 14 Claims

1. A method for lubricating metal during working thereof which comprises applying to said metal a composition which provides lubricity thereto and which comprises at least one polymer of at least one monoepoxide or monoepisulfide, said monoepoxide or monoepisulfide having the formula

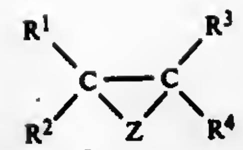

wherein R^1 is a substantially aliphatic hydrocarbon-based radical, each of R^2, R^3 and R^4 is individually hydrogen or a substantially aliphatic hydrocarbon-based radical, Z is oxygen or sulfur, and the total number of aliphatic carbon atoms in R^1, R^2, R^3 and R^4 is from about 6 to about 23; said composition melting within the range of about 30° to about 150° C.

8. A composition which melts within the range of about 30° to about 150° C. and which comprises:

(A) At least 50% by weight of at least one polymer of at least one monoepoxide or monoepisulfide, said monoepoxide or monoepisulfide having the formula

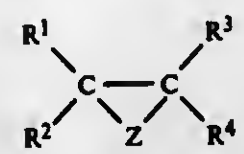

wherein R^1 is a substantially aliphatic hydrocarbon-based radical, each of R^2, R^3 and R^4 is individually hydrogen or a substantially aliphatic hydrocarbon-based radical, Z is oxygen or sulfur, and the total number of aliphatic carbon atoms in R^1, R^2, R^3 and R^4 is from about 6 to about 23; and
(B) At least one polymer of ethylene oxide or propylene oxide.

4,299,713
ELECTRICAL TREE AND WATER TREE RESISTANT POLYMER COMPOSITIONS
Melvin F. Maringer, and Anthony Barlow, both of Cincinnati, Ohio, assignors to National Distillers and Chemical Corp., New York, N.Y.
Continuation-in-part of Ser. No. 58,878, Jul. 19, 1979. This application Jun. 23, 1980, Ser. No. 161,932
Int. Cl.³ H01B *3/18*
U.S. Cl. 174—110 SR 42 Claims

1. An unfilled polymeric composition having enhanced resistance to water treeing and electrical treeing comprising a homogeneous mixture of a polymeric component and an effective amount, as a water treeing and an electrical treeing inhibitor, of an organic compound having the formula:

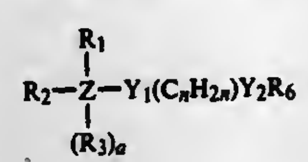

wherein

R_1, R_2 and R_3 are the same or different and are $Y_1(C_nH_{2n})Y_2R_6$, C_1 to C_8 alkyl, C_1 to C_8 alkoxy, C_1 to C_8 acyloxy, C_6 to C_{18} aryloxy or substituted aryloxy, C_6 to C_{18} aryl or substituted aryl, hydrogen, halogen, an epoxy containing radical, C_2 to C_8 alkenyl, a nitrogen containing radical, a carboxy containing radical, a mercapto containing radical or an ether containing radical; R_6 is C_1 to C_8 alkyl, C_1 to C_8 alkoxy, C_1 to C_8 acyloxy, C_6 to C_{18} aryloxy or substituted aryloxy, C_6 to C_{18} aryl or substituted aryl, hydrogen, halogen, an epoxy containing radical, C_2 to C_8 alkenyl, a nitrogen containing radical, a carboxy containing radical, a mercapto containing radical or an ether containing radical;
Y_1 and Y_2 are the same or different and are O, S or NH;
Z is Si, Sn, Ti, P or B;
a is 0 or 1; and
n is 1 to 8 with the proviso that when Z is P, a is O, Y_1 and Y_2 are each O and R_1 and R_2 are the same and are $Y_1(C_nH_{2n})Y_2R_6$.

4,299,714
HYDROCARBON BASED CENTRAL SYSTEM FLUID COMPOSITION
Kensuke Sugiura; Mineo Kagaya, both of Kawasaki; Hiroyuki Aoki, Urawa, and Takeitiro Takehara, Yokohama, all of Japan, assignors to Nippon Oil Company, Ltd. and Nissan Motor Co., Ltd., both of Japan
Filed Aug. 4, 1980, Ser. No. 175,041
Claims priority, application Japan, Aug. 6, 1979, 54/99400
Int. Cl.³ C09K *5/00*
U.S. Cl. 252—73 6 Claims

1. A central system fluid composition consisting essentially of (1) 70 to 95% by weight of a hydrocarbon base oil and (2) 5 to 30% by weight of a viscosity index improver, wherein said hydrocarbon base oil (1) contains (a) 25% by weight to less than 50% by weight, based on the weight of the hydrocarbon base oil (1), of a dimer of 1-decene and (b) more than 50% by weight to 75% by weight of a petroleum lubricating oil fraction, and said viscosity index improver (2) is a polymethacrylate having a viscosity average molecular weight of 10,000 to 700,000 obtained by polymerizing at least one ester of a saturated monohydric aliphatic alcohol having 1 to 18 carbon atoms with methacrylic acid, and (3) with or without a conventional additive.

4,299,715
METHODS AND MATERIALS FOR CONDUCTING HEAT FROM ELECTRONIC COMPONENTS AND THE LIKE
Fred J. Whitfield, 1405 S. Village Way, Santa Ana, Calif. 92705, and Arthur T. Doyel, Jr., 4402 Casa Oro, Yorba Linda, Calif. 92686
Filed Apr. 14, 1978, Ser. No. 896,177
Int. Cl.³ C09K *5/00*; F28F *7/00*
U.S. Cl. 252—74 2 Claims

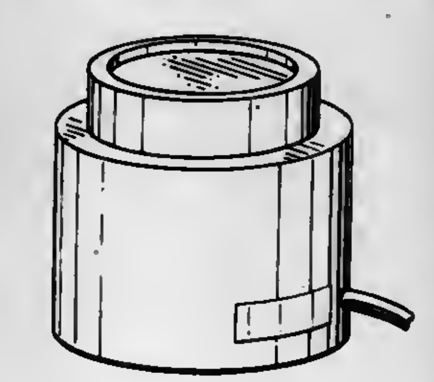

1. For application to the surfaces of components of electronic apparatus, a heat conducting material including a substantially uniform mixture, in solid form, of finely divided solid heat conductive material and a waxy material which is solid at normal room temperature; and
in which said waxy material comprises an excoriatable combination of wax and petroleum jelly.

4,299,716
DETERGENT COMPOSITIONS
John S. Cottrell, South Wirral, and Peter J. Powers, Wirral, both of England, assignors to Lever Brothers Company, New York, N.Y.
Filed Mar. 3, 1980, Ser. No. 126,518
Claims priority, application United Kingdom, Mar. 6, 1979, 7859/79
The portion of the term of this patent subsequent to Nov. 10, 1998, has been disclaimed.
Int. Cl.³ C11D *7/54*
U.S. Cl. 252—99 6 Claims

1. An alkaline detergent composition for fabric washing containing

(i) from about 10% to about 40% of a synthetic detergent surfactant selected from the groups consisting of anionic, nonionic, amphoteric and zwitterionic detergent surfactants and mixture thereof;
(ii) from about 10% to about 40% of an alkali metal carbonate;
(iii) from about 1% to less than 5% of an orthophosphate material selected from the group consisting of orthophosphoric acid and the ammonium, sodium or potassium salts thereof; and
(iv) not more than 5% of other phosphate builder salts, all percentages being by weight of the composition.

5. A composition according to claim 1, wherein said composition additionally contains from about 10% to about 50% by weight of said composition of a inorganic peroxygen bleach other than an alkali metal percarbonate.

4,299,717
DETERGENT COMPOSITIONS
John S. Cottrell, South Wirral, and Peter J. Powers, Wirral, both of England, assignors to Lever Brothers Company, New York, N.Y.
Filed Mar. 3, 1980, Ser. No. 126,603
Claims priority, application United Kingdom, Mar. 6, 1979, 07858/79
The portion of the term of this patent subsequent to Nov. 10, 1998, has been disclaimed.
Int. Cl.³ C11D *7/54*
U.S. Cl. 252—99 7 Claims

1. An alkaline detergent composition for fabric washing containing:

(i) from about 10% to about 40% of a synthetic detergent surfactant selected from the group consisting of anionic, nonionic, amphoteric zwitterionic detergent surfactant and mixtures thereof;
(ii) from about 10% to less than about 40% of an alkali metal carbonate;
(iii) from about 1% to about 12% of a pyrophosphate material selected from the group consisting of ammonium, sodium and potassium pyrophosphates; and
(iv) not more than about 5% of other phosphate builder salts;

all percentages being by weight of the composition.

6. A composition according to claim 1, wherein said composition additionally contains from about 10% to about 50% by weight of said composition of a inorganic peroxygen bleach other than an alkali metal percarbonate.

4,299,718
PROCESS FOR PREPARING MIXTURES OF PEROXIDES
Dino Conti, Milan; Luigi Minotti, Induno Olona, and Egeo Sacrini, Milan, all of Italy, assignors to Montedison S.p.A., Milan, Italy
Filed Dec. 28, 1979, Ser. No. 107,873
Claims priority, application Italy, Dec. 29, 1978, 31403 A/78
Int. Cl.³ C11D *3/39*, *3/395*, *7/54*
U.S. Cl. 252—186 13 Claims

1. Process for the preparation of mixtures constituted by

ketone peroxides, characterized in that a ketone peroxide formulation is used as a solvent medium for the in situ peroxidation of one or more ketone compounds with hydrogen peroxide, using a quantity of ketone compound of 0.01 mol to 0.7 mol in 100 g of reaction mass, and a quantity of hydrogen peroxide of 0.03 mol to 1.5 mols in 100 g of reaction mass, at a peroxidation temperature of 0° C. to 50° C. and for a reaction time comprised between 5 minutes and 16 hours.

4,299,719
DEOXIDIZER

Motohisa Aoki, Funabashi; Isao Kawakami, Machida, and Masami Nishihara, Okayama, all of Japan, assignors to Mitsubishi Chemical Ind., Ltd., Tokyo and Teikoku Kako Co., Ltd., Osaka, both of Japan

Filed Oct. 23, 1979, Ser. No. 87,498

Claims priority, application Japan, Oct. 23, 1978, 53-130245; May 11, 1979, 54-57864; May 11, 1979, 54-57865; Jul. 16, 1979, 54-85541

Int. Cl.³ C09K *15/02;* **A23B** *7/14;* **A23D** *5/04*

U.S. Cl. 252—188 **10 Claims**

1. A deoxidizer packed in a gas permeable bag, which comprises:

(a) a ferrous carbonate having a specific surface area of at least 20 m^2/g as the main component, and

(b) a component selected from the group consisting of (1) reduced iron powder and a metal halide, (2) an alkali metal hydroxide and/or an alkaline earth metal hydroxide and (3) calcium oxide and/or ettringite.

4,299,720
LIQUID CRYSTAL MIXTURE

Maged A. Osman, Zurich; Terry J. Scheffer, Forch; Laszlo Revesz, Fislisbach, and Jürgen Markert, Ettingen, all of Switzerland, assignors to BBC Brown, Boveri & Co., Ltd., Baden, Switzerland

Filed Nov. 9, 1979, Ser. No. 92,961

Claims priority, application Switzerland, Dec. 21, 1978, 12993/78

Int. Cl.³ C09K *3/34;* **G02F** *1/13*

U.S. Cl. 252—299.1 **12 Claims**

1. Liquid crystal mixture intended for electro-optical displays having no polarizers, consisting of:

a nematic liquid crystal as the host phase;

an optically active additive to give the host phase a cholesteric structure; and

at least one pleochroic anthraquinone dye as the guest phase dissolved in the host phase, said anthraquinone dye having the formula:

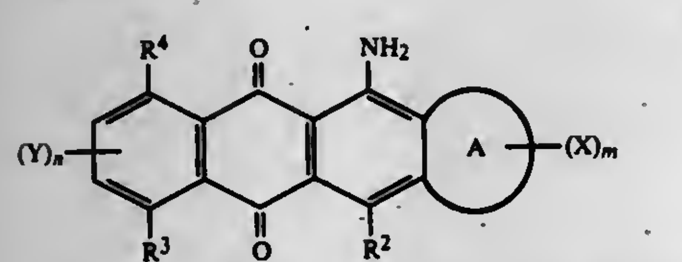

(I)

wherein R^2, R^3 and R^4 are the same or different substituents and are selected from the group consisting of hydrogen, hydroxyl, amino, and short-chain N-monoalkylamine substituents; Y represents halogen, alkyl or alkoxy groups each with 1-16 carbon atoms, amino, alkylamino groups with 1-16 carbon atoms in the alkyl portion, nitro, or hydroxyl groups; X represents halogen, amino or the group R^5, wherein R^5 is an alkyl group with 1-18 carbon atoms, an alkyl chain with 1-18 carbon atoms that is interrupted with one or two oxy groups or a group having the formula:

$$-(CH_2)_p-(O-C_2H_4)_r-O-R^6$$

wherein p is an integer from 1 to 6, r is either zero or an integer from 1 to 6, and R^6 is an alkyl group with 1-6 carbon atoms; the symbol A represents a 5 or 6 membered aromatic, alicyclic or heterocyclic ring which may be substituted with oxo and/or imino groups or, optionally, hydroxy and/or amino groups and indices n and m can be 0, 1 or 2.

4,299,721
METHOD OF AND APPARATUS FOR PRODUCING RADIO-ACTIVE WASTE PACKAGE

Mikio Hirano, and Susumu Horiuchi, both of Hitachi, Japan, assignors to Hitachi, Ltd., Tokyo, Japan

Filed Nov. 30, 1978, Ser. No. 964,819

Claims priority, application Japan, Dec. 2, 1977, 52-143884

Int. Cl.³ G21F *9/16*

U.S. Cl. 252—628 **14 Claims**

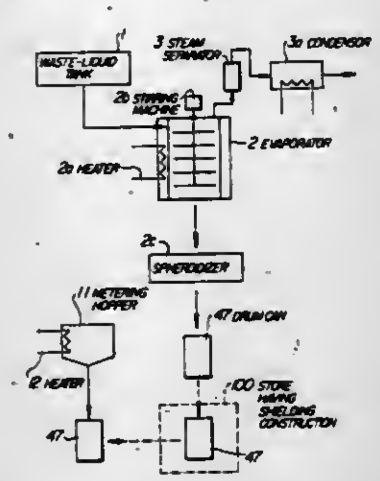

1. In a method of producing a radio-active waste package, comprising the steps of radio-active powder by evaporating and drying radio-active waste to form a radioactive powder, forming pellets from said radio-active powder, receiving said pellets in a container, heating said container up to a predetermined temperature, filling said container with a thermoplastic composition in a molten state to cover said pellets with said thermoplastic composition, cooling said container so as to integrally solidify the thermoplastic composition about said pellets in said container, and sealingly fitting a lid member to said container, wherein the improvement comprises, including before said cooling step, a step of holding said container at said predetermined temperature over a predetermined period, thereby completely impregnating the individual pellets as well as interstices between pellets with said thermoplastic composition.

4,299,722
INTRODUCTION OF FLUENT MATERIALS INTO CONTAINERS

Arthur J. Stock, Lakewood, and Paul C. Williams, Medina, both of Ohio, assignors to Stock Equipment Company, Cleveland, Ohio

Continuation of Ser. No. 898,959, Apr. 21, 1978, abandoned. This application Oct. 9, 1979, Ser. No. 82,716

Int. Cl.³ G21F *9/16*

U.S. Cl. 252—628 **9 Claims**

1. A process of loading a container with a quantity of a dry particulate solidifying agent and liquid-containing fluent material that is capable of being mixed with solidifying agent and ultimately provide a mass of a mixture that is substantially completely solidified within and substantially fills said container, comprising: placing in said container a predetermined amount of dry solidifying agent having a substantial volume of air contained in the solidifying agent between the particles thereof; introducing into said container without mixing in said container a predetermined first amount of a liquid-containing fluent material to partially fill said container; closing said container; agitating said closed container to mix said solidifying

agent and said predetermined first amount of fluent material in said container to provide a first mixture from which said volume of air is substantially removed from between the particles of said solidifying agent and is eliminated from the mixture of solidifying agent and fluent material; opening said container; introducing into said container a predetermined additional amount of at least one liquid-containing fluent material sufficient to substantially fill said container to a desired degree; closing said container; agitating said closed container to mix

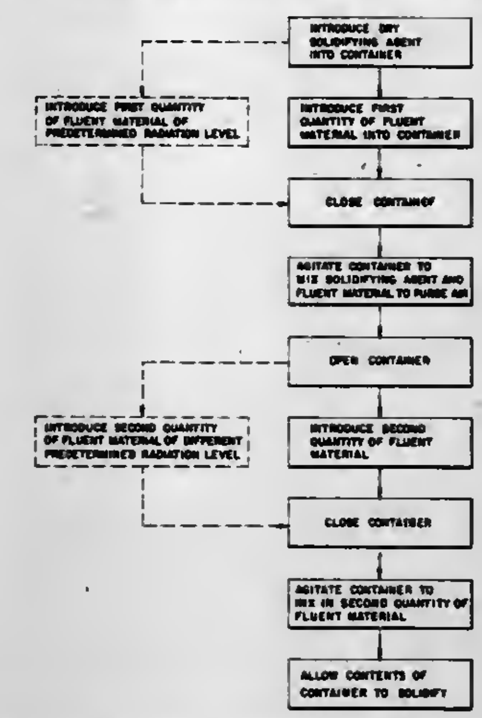

said first mixture and said additional amount of fluent material in said container to provide a resultant mixture; and completely solidifying said resultant mixture of material in said container to provide said solidified mass; said amount of solidifying agent, said first amount of fluent material and said additional amount of fluent material, and the total amount of liquid in said amounts of fluent materials being predetermined to cause essentially complete solidification of said resultant mixture in said container.

4,299,723
MICROCAPSULES AND THEIR PREPARATION

Manfred Dahm, Leverkusen; Gert Jabs, Odenthal; Bernd Koglin, Bergisch-Gladbach; Hildegard Schnöring, Wuppertal, and Kurt Riecke, Kempen, all of Fed. Rep. of Germany, assignors to Bayer Aktiengesellschaft, Fed. Rep. of Germany

Filed Mar. 10, 1980, Ser. No. 128,928

Claims priority, application Fed. Rep. of Germany, Mar. 14, 1979, 2909950

Int. Cl.³ B01J *13/02*

U.S. Cl. 252—316 **4 Claims**

1. A microcapsule comprising a capsule wall which surrounds a core, the capsule wall comprising the polyaddition product of a diamine and a diisocyanate of the formula

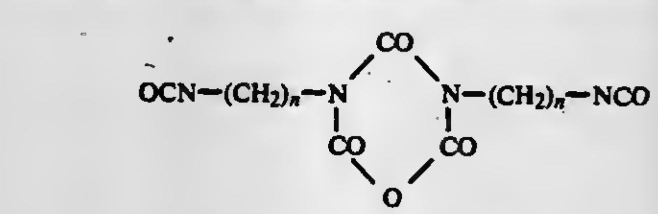

wherein n is an integer of from 3 to 6 and the core comprising a solution of a color-former and an organic solvent comprising a mixture of an alkyl naphthalene and an isoparaffin having from 10 to 20 carbon atoms, said microcapsule having been tempered for at least 2 hours at a temperature of from 60 to 70° C. after its formation.

4. A process for preparing a microcapsule of claim 1 which comprises dissolving the diisocyanate and color-former in the organic solvent, emulsifying the thusly formed organic phase in an aqueous phase, adding the diamine in the form of an aqueous solution and in a stoichiometric quantity to the thusly formed emulsion and tempering resulting microcapsules for at least 2 hours at a temperature of from 60° to 70° C.

4,299,724
PROCESS FOR THE RECOVERY OF LIQUID EXTRACTANT AND ACID FROM EMULSIONS FORMED DURING METAL RECOVERY FROM ACID SOLUTIONS

Regis R. Stana, Lakeland, Fla., assignor to Wyoming Mineral Corporation, Lakewood, Colo.

Filed Feb. 21, 1979, Ser. No. 13,595

Int. Cl.³ B01D *17/04*

U.S. Cl. 252—348 **8 Claims**

1. In a liquid-liquid contacting process, involving an aqueous acid solution and organic liquid, where at least one of the liquids contains solid material and where said liquids possess relatively low-mutual solubilities and form two liquid phases separated by an emulsion, the process comprising the steps of:

(A) withdrawing the emulsion, said emulsion comprising at said aqueous acid solution entrapped by water-permeable membranes formed by the solid material present in at least one of the liquids;

(B) admixing water and the emulsion in a volume ratio of water:emulsion of between about 0.5 to 4.5:1 and raising the temperature of the admixture to between about 45° C. to 99° C., to cause water permeation of the membranes causing the membranes to disintegrate and release liquid, thereby forming a three-phase composition consisting essentially of the two liquids and the solid material; and then

(C) separating the two liquids from the solid material.

4,299,725
AQUEOUS MEDIA OF DECREASED CORROSIVENESS FOR IRON-CONTAINING METALS

Volker Wehle, Hilden; Wolfgang Rupilius, Düsseldorf; Jürgen Reiffert, Oberhausen, and Gabriele Rogall, Moers, all of Fed. Rep. of Germany, assignors to Henkel Kommanditgesellschaft auf Aktien, Dusseldorf-Holthausen and Deutsche Gold- und Silber Scheideanstalt vormals Roessler, Frankfurt am Main, both of, Fed. Rep. of Germany

Continuation of Ser. No. 683,515, May 5, 1976, abandoned. This application Mar. 10, 1978, Ser. No. 885,320

Claims priority, application Fed. Rep. of Germany, May 7, 1975, 2520265

Int. Cl.³ C09K *3/00*

U.S. Cl. 252—389 A **10 Claims**

9. An aqueous medium having an effective dissolved content, as agent inhibiting the corrosiveness of said solution towards corrodible iron-containing metals, of:

(A) 1 to 50 parts per million parts by weight of an aminoalkanol material selected from the group consisting of mixtures of vicinal aminoalkanols having the formula:

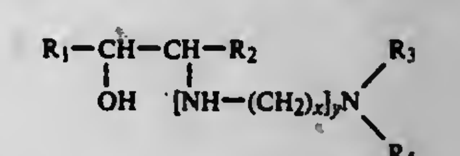

wherein R_1 and R_2 each represent a substituent selected from the group consisting of H and unbranched alkyl having from 1 to 18 carbon atoms and the sum of the carbon atoms in R_1 and R_2 is from 9 to 18, R_3 and R_4 each represent a substituent selected from the group consisting of H, C_{1-4} alkyl and C_{2-4} hydroxyalkyl, and X represents a value from 2 to 6 and y represents a value from 0 to 1 inclusive; the

$$R_1-\underset{|}{CH}-\underset{|}{CH}-R_2$$

units in the aminoalkanols of said mixture being of at least two different chain lengths in the range from 11 to 20 carbon atoms; and water-soluble salts of said aminoalkanols;

(B) 0.1 to 10 parts per million parts by weight of divalent zinc ions; and

(C) 0.3 to 30 parts per million parts by weight of a phosphonic acid sequestering agent.

4,299,726

PROCESS FOR PREPARING WHOLE BLOOD REFERENCE CONTROLS HAVING LONG TERM STABILITY, PRECONDITIONING DILUENT AND MEDIA THEREFOR

Harold R. Crews, Miami; David L. Chastain, Jr., Fort Lauderdale, and Stephen L. Ledis, Hialeah, all of Fla., assignors to Coulter Electronics, Inc., Hialeah, Fla.

Filed May 7, 1979, Ser. No. 36,794

Int. Cl.³ G01N *33/48;* **C09K** *3/00*

U.S. Cl. 252—408 **14 Claims**

1. In a media for preparing whole blood hematology reference controls on addition of red blood cells thereto for devices using electronic means,

said media being an aqueous solution of lactose, compatible bacteriostatic and fungicidal agents, and albumen, and being osmotically balanced at a preselected and controlled pH,

the improvement which comprises including in a total amount sufficient to act as a cell membrane stabilizer, but insufficient to cause lysing of said red blood cells, at least one ingredient selected from the following groups:

A. Bile salts and cholic acid derivatives; and

B. Phenothiazine compounds having antihistamine properties,

said controls having stability of at least 60 days for size distribution parameters, normal appearance of cells with respect to size and shape, and freedom from any particulate matter which causes erroneous results.

4,299,727

DISPOSABLE REVERSIBLE THERMOMETER

Craig R. Hof, Hopatcong; Concepcion Osio, Jersey City, and Roy A. Ulin, Wyckoff, all of N.J., assignors to Akzona Incorporated, Asheville, N.C.

Filed Jan. 7, 1980, Ser. No. 104,411

Int. Cl.³ C09K *3/00;* **G01K** *11/06, 11/08, 11/12, 11/16*

U.S. Cl. 252—408 **15 Claims**

1. A composition of matter comprising:

(1) a heat-sensitive composition capable of reversibly changing color at a predetermined temperature comprising at least one heat-sensitive phase/color change agent and present in a quantity of from about 40% to about 70% by weight;

(2) a non-polar matrix-forming amorphous material present in a quantity of from about 20% to about 40% by weight; and

(3) a non-polar film-forming material that is more crystalline than said matrix-forming amorphous material and present in a quantity to form a film over said matrix having said heat-sensitive composition dispersed therein sufficient to prevent subliming of said heat-sensitive composition therethrough, and capable of forming a matrix having said heat-sensitive composition dispersed therein, with the proviso that at least each of (2) and (3) is

(a) soluble in said heat-sensitive composition at a temperature of from about 25° C. to about 35° C. above the melting point of said heat-sensitive composition;

(b) insoluble in said heat-sensitive composition below the melting point thereof plus at least 5° C.;

(c) a non-solvent for any heat-sensitive composition phase/color change agents;

(d) inert toward said heat-sensitive composition; and

(e) possessed of a melting point at least 15° C. above the melting point of said heat-sensitive composition.

4,299,728

BLOOD GAS CONTROL

Alan D. Cormier, Newburyport; Marvin Feil, Brookline, and Kenneth D. Legg, Wellesley, all of Mass., assignors to Instrumentation Laboratory Inc., Lexington, Mass.

Filed Jul. 21, 1980, Ser. No. 170,600

Int. Cl.³ C09K *3/00;* **G01N** *33/48;* **B01J** *13/00;* **G01N** *33/00*

U.S. Cl. 252—408 **10 Claims**

1. A blood gas control product comprising a sealed container and a liquid composition of matter in said container, said composition of matter comprising

water,

5–40% by volume of a water-insoluble perfluorinated compound material, said perfluorinated compound material having an oxygen solubility coefficient, at one atmosphere pressure, 25° C., and a volumetric proportion of 15%, of at least 10 ml O_2 per 100 ml liquid,

0.25–10% by volume of a non-ionic fluorocarbon-based surfactant capable of emulsifying said perfluorinated compound material,

a preservative present in a concentration sufficient to inhibit microbial growth in said blood gas control liquid without impairing the quality control functions of said liquid, and

a pH buffering agent substantially non-reactive with said preservative, said blood gas control liquid having a pH in the range of 7.0 to 8.0, a partial pressure of CO_2 in the range of 15–80 mm Hg, and a partial pressure of O_2 in the range of 20–600 mm Hg.

4,299,729

METHOD OF REACTIVATING A CATALYTIC COMPOSITE OF AN ADSORPTIVE CARRIER MATERIAL AND A MERCAPTAN OXIDATION CATALYST

Robert R. Frame, Glenview, Ill., assignor to UOP Inc., Des Plaines, Ill.

Continuation-in-part of Ser. No. 973,303, Dec. 26, 1978, Pat. No. 4,213,877. This application Jan. 4, 1980, Ser. No. 156,440

The portion of the term of this patent subsequent to Jul. 22, 1997, has been disclaimed.

Int. Cl.³ B01J *31/40;* **C10G** *19/08*

U.S. Cl. 252—412 **18 Claims**

1. A method of reactivating a deactivated mercpatan oxidation catalytic composite comprising an adsorptive carrier material and a metal chelate, said method comprising the steps of first contacting said composite with an aqueous ammoniacal solution of a metal chelate, and second contacting said composite with an aqueous solution of a quaternary ammonium compound at a temperature of from about 55° C. to about 175° C.

6. The method of claim 1 wherein said aqueous ammoniacal solution of a metal chelate comprises from about 0.1 wt. % to about 5 wt. % ammonium hydroxide and from about 0.01 wt. % to about 1 wt. % cobalt phthalocyanine monosulfonate.

9. The method of claim 1 wherein said quaternary ammonium compound is represented by the structural formula:

$$\left[\begin{array}{c} R_1 \\ | \\ R-N-R_2 \\ | \\ R \end{array}\right]^{+}_{x} \; ^{-}$$

wherein R is a hydrocarbon radical containing up to about 20 carbon atoms and selected from the group consisting of alkyl, cycloalkyl, aryl, alkaryl, and aralkyl, R_1 is a substantially straight chain alkyl radical containing from about 5 to about 20 carbon atoms, R_2 is selected from the group consisting of aryl, aralkyl and alkaryl, and X is an anion.

4,299,730

PROCESS FOR THE PRODUCTION OF A CATALYST FOR THE HYDRATION OF OLEFINS INTO ALCOHOLS

August Sommer, Herne, and Rainer Brücker, Castrop-Rauxel, both of Fed. Rep. of Germany, assignors to Chemische Werke Huls Aktiengesellschaft, Herne, Fed. Rep. of Germany

Filed Feb. 26, 1980, Ser. No. 124,758

Claims priority, application Fed. Rep. of Germany, Mar. 5, 1979, 2908491

Int. Cl.³ B01J *27/14, 29/06*

U.S. Cl. 252—435 **14 Claims**

1. A process for producing a clay-containing catalyst for the hydration of olefins having 2-3 carbon atoms into alcohols, which comprises:

(A) acid-treating a montmorillonite-containing clay which is contaminated by not more than 3% of quartz, feldspar or mica, or mixtures thereof, and which may contain up to 0.5% K_2O, until said clay has an Al_2O_3 content of 13–18% by weight, thereby obtaining a surface area of 200–400 m^2/g;

(B) molding said clay at a total water content of 20–35%; then

(C) calcining said clay at 500°–800° C.;

(D) acid-treating said molded and calcined clay to an Al_2O_3 content of 1–5% by weight, thereby obtaining a material with a surface area of 150–250 m^2/g; and then

(E) impregnating said material with phosphoric acid.

4,299,731

LARGE PORE VOLUME OLEFIN POLYMERIZATION CATALYSTS

Max P. McDaniel, Bartlesville, Okla., and John J. Meister, Gainesville, Fla., assignors to Phillips Petroleum Company, Bartlesville, Okla.

Filed Feb. 6, 1980, Ser. No. 118,837

Int. Cl.³ B01J *21/08, 23/26*

U.S. Cl. 252—451 **10 Claims**

1. A process to produce an olefin polymerization catalyst comprising:

(a) contacting an aqueous alkali metal silicate comprising solution with an acid to produce an alkali-containing hydrogel,

(b) removing alkali from said alkali-containing hydrogel by washing with water to obtain a purified silica-containing hydrogel,

(c) admixing the so obtained purified silica-containing hydrogel with acid to obtain an acidified silica-containing hydrogel having a pH of 3.5 or less,

(d) maintaining said acidified silica-containing hydrogel at a temperature near the boiling point of water at the drying pressure until essentially all water is evaporated

(e) prior to, during or after said drying utilizing a chromium source to obtain a chromium-containing gel,

(f) recovering a chromium-containing xerogel as the product of the process.

4,299,732

PROCESS FOR THE PRODUCTION OF AMORPHOUS ALUMINOSILICATES AND THEIR USE AS CATALYSTS

William J. Ball, Capel; Keith W. Palmer, Weybridge, and David G. Stewart, Epsom, all of England, assignors to The British Petroleum Company Limited, London, England

Filed Oct. 1, 1979, Ser. No. 80,477

Claims priority, application United Kingdom, Oct. 6, 1978, 39565/78

Int. Cl.³ B01J *29/02, 21/12*

U.S. Cl. 252—455 R **11 Claims**

1. A process for the production of an amorphous aluminosilicate which process comprises mixing, under reaction conditions which effect formation of said aluminosilicate, a source of silica, a source of alumina, a source of alkali metal, water and one or more polyamines other than a diamine.

2. A process according to claim 1 wherein said polyamine is selected from polyethylene polyamines having the formula:

$$H_2N\!\left(CH_2\underset{\substack{|\\R^1}}{CH}NH\right)_{x}\!H \qquad (I)$$

wherein x is an integer greater than 1 and R^1 is selected from hydrogen, alkyl groups containing from 1 to 6 carbon atoms, cycloaliphatic groups and aromatic groups.

11. A catalyst composition suitable for use in the production of synthesis gas from methanol which composition consists of an amorphous aluminosilicate as produced by the process claimed in claim 1 and from 0.1 to 20% by weight of at least one metal selected from copper, zinc, gallium, bismuth, chromium, thorium, iron, cobalt, ruthenium, rhodium, nickel, palladium, iridium and platinum.

4,299,733

HIGH OCTANE FCC CATALYST

Hosheng Tu, Shorewood, Ill., assignor to UOP Inc., Des Plaines, Ill.

Filed May 8, 1980, Ser. No. 147,980

The portion of the term of this patent subsequent to Jul. 29, 1997, has been disclaimed.

Int. Cl.³ B01J *29/06, 21/04, 21/06*

U.S. Cl. 252—455 Z **12 Claims**

1. A catalytic composite comprising particles of the oxide of at least one of the elements selected from the group consisting of silicon, aluminum and titanium, said composite manufactured by:

(a) preparing a gelation product by mixing together in an aqueous medium a water soluble inorganic salt of said element and a water soluble cationic organic polymer comprising a cationic polyacrylamide having a molecular weight greater than 500,000; and

(b) spray drying said gelation product in air at a temperature sufficient to decompose said organic polymer and to form said oxide.

2. The catalytic composite of claim 1 further characterized in that said composite contains a zeolitic crystalline aluminosilicate incorporated therein by dipersing said crystalline aluminosilicate in water to prepare a slurry and adding said slurry to said gelation product prior to said spray drying.

4,299,734

CATALYST FOR PURIFYING EXHAUST GASES AND METHOD FOR PRODUCING SAME

Yoshiyasu Fujitani; Hideaki Muraki, both of Nagoya; Shiroh Kondoh, Aichi; Makoto Tomita, Obu; Kouji Yokota, and Hideo Sobukawa, both of Nagoya, all of Japan, assignors to Kabushiki Kaisha Toyota Chuo Kenkyusho, Nagoya, Japan

Filed May 20, 1980, Ser. No. 151,601

Claims priority, application Japan, May 23, 1979, 54/64475

Int. Cl.³ B01J *21/04, 23/10, 23/84, 23/89*

U.S. Cl. 252—462 **13 Claims**

1. A catalyst for reducing nitrogen oxides, carbon monoxide

and hydrocarbons, the noxious components in exhaust gases comprising:

a porous carrier consisting essentially of zirconia and at least one oxide selected from the group consisting of cerium oxide, manganese oxide and iron oxide; and

a metal as a catalyst ingredient supported thereon selected from the group consisting of platinum, palladium and mixtures thereof.

4,299,735

HEAVY METAL-MANGANESE OXIDATION CATALYSTS AND PROCESS OF PRODUCING SAME

Peter G. Mein, and Arno H. Reldies, both of LaSalle, Ill., assignors to Carus Corporation, LaSalle, Ill.

Continuation-in-part of Ser. No. 59,439, Jul. 20, 1979, abandoned. This application Apr. 7, 1980, Ser. No. 137,920

Int. Cl.[3] B01J *21/04, 23/34, 23/72, 23/84*

U.S. Cl. 252—465 **22 Claims**

1. The process of producing a heavy metal-manganese dioxide oxidation catalyst comprising the steps of:

(a) forming a suspension of finely-divided alkali metal delta manganese dioxide hydrate in an aqueous solution containing heavy metal ions selected from the class consisting of copper, chromium, iron, lead, nickel, cobalt, silver, and mixtures thereof, said suspension having an initial pH of at least one-half pH point below the pH at which the heavy metal hydroxide begins to precipitate;

(b) exchanging the alkali of said alkali metal manganese dioxide hydrate with said heavy metal ions under pH conditions on the acid side of said hydroxide precipitation pH and continuing said exchanging reaction until the manganese reaction product contains not over 0.05 moles of bound alkali metal per mole of manganese, said heavy metal ions exchanged for said alkali metal being complexed with the manganese dioxide of the resulting reaction product;

(c) separating said reaction product from said aqueous solution; and

(d) preparing dried porous catalytic pellets from said reaction product.

4,299,736

CONDUCTIVE MOLDING COMPOSITION AND DISCS THEREFROM

Pabitra Datta, Cranbury, N.J., assignor to RCA Corporation, New York, N.Y.

Filed May 19, 1980, Ser. No. 151,361

Int. Cl.[3] C08K *9/04*

U.S. Cl. 252—506 **18 Claims**

10. In a conductive molding composition comprising a polyvinylchloride polymer, a solid mercapto tin stabilizer, an acrylic processing aid, an internal lubricant and a sufficient amount of conductive particles so that the composition has a bulk resistivity below about 500 ohm-cm at 900 MHz, the improvement which comprises employing as said conductive particles carbon black particles the surfaces of which have been treated with a chloride of a long-chain fatty acid.

4,299,737

STABLE AQUEOUS OR AQUEOUS-ALCOHOLIC SOLUTIONS OF FAT-SOLUBLE PERFUME OILS

Alfred Meffert; Fanny Scheuermann, both of Düsseldorf, and Achim Werdehausen, Haan, all of Fed. Rep. of Germany, assignors to Henkel Kommanditgesellschaft auf Aktien, Düsseldorf-Holthausen, Fed. Rep. of Germany

Filed Mar. 17, 1980, Ser. No. 130,721

Claims priority, application Fed. Rep. of Germany, Apr. 4, 1979, 2913467

Int. Cl.[3] C11B *9/00*

U.S. Cl. 252—522 R **13 Claims**

1. A clear, stable, aqueous or aqueous-alcoholic solution of a fat-soluble perfume oil, which comprises

(a) from about 0.1 to 20% by weight, based on the total weight of the solution, of a hydroxyalkylether alkoxylate prepared by reacting an epoxyalkane of the formula

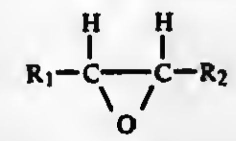

wherein R_1 and R_2, which may be the same or different, each represent hydrogen or an alkyl radical having from about 1 to 24 carbon atoms, with the proviso that the sum of the carbon atoms in R_1 and R_2 is from about 2 to 26, or a mixture thereof, with monohydric or polyhydric aliphatic alcohols having from 1 to 10 carbon atoms and from 1 to 4 hydroxyls groups in molar ratio of epoxyalkane to alcohol of from 1:1.1 to 1:10 in the absence of solvents and in the presence of from about 0.25 to 10 g per mol of epoxyalkane of sulfuric acid or aromatic sulfonic acid not having more than 8 carbon atoms at from about 50° to 130° C., to form an ether alcohol, and then, after neutralization of the acid and distillation of unreacted alcohol, reacting the ether alcohol obtained first with from about 0.5 to 10 mols of propylene oxide per mol of ether alcohol and then with from about 4 to 20 mols of ethylene oxide per mol of ether alcohol, the molar ratio of the ethylene oxide employed to the propylene oxide employed being from about 4:1 to 12:1;

(b) from about 0.1 to 1.0% by weight, based on the total weight of the solution, of a fat-soluble perfume oil; and

(c) the remainder to 100% by weight of water or water and a water-miscible alcohol.

4,299,738

DETERGENT COMPOSITION

Hiroshi Suzuki, Mitaka; Hideo Narasaki, Tokyo; Sigeru Seki, Urawa; Kiichi Endo, Iwaki, and Takao Hirose, Ichikawe, all of Japan, assignora to Director-General of Agency of Industrial Scieoce and Technology; Kureha Chemical Industry Co. Ltd. and Sumitomo Corporation, all of Tokyo, Japan

Filed Dec. 14, 1978, Ser. No. 969,489

Claims priority, application Japan, Dec. 18, 1977, 52/152127

Int. Cl.[3] C11D *3/12, 3/26;* **C01B** *33/28;* **C02F** *1/42*

U.S. Cl. 252—541 **2 Claims**

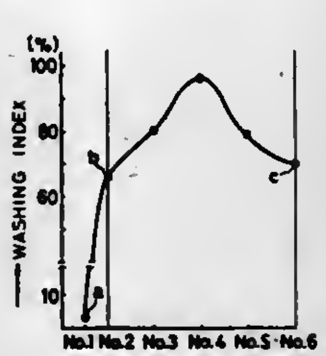

1. A detergent composition which consists of (A) a surfactant selected from the group consisting of anionic surfactants and non-ionic surfactants and (B) a builder, said builder being a mixture of (i) an imido-bis-sulfate of the general formula $(MSO_3)_2NM'$ wherein M represents a cation selected from the group consisting of sodium, potassium, lithium and ammonium and M' represents a cation selected from the group consisting of hydrogen, sodium, potassium, lithium and ammonium, and (ii) sodium aluminosilicate of 0.05–30 micron particle size of the general formula $(Na_2O)_xAl_2O_3\,(SiO_2)_y$ wherein the sodium is exchangeable with a calcium ion, x is a number within the range of 0.5–2.0 and y is a number within the range of 0.5–8, the total amount of said imido-bis-sulfate and said sodium aluminosilicate being 50–950 parts by weight per 100 parts by weight of said surfactant, said imido-bis-sulfate being 80–30 by weight percent based on the total amount of said imido-bis-sulfate and said sodium aluminosilicate, said sodium aluminosilicate being 20–70 by weight percent based on the total amount of said imido-bis-sulfate and said sodium aluminosilicate, said sodium aluminosilicate having at least 50 mg CaO/g of Ca-combining capacity and up to 200 mg CaO/g.

4,299,739

USE OF ALUMINUM SALTS IN LAUNDRY DETERGENT FORMULATIONS

Michael A. Esposito, and Henricus M. Princen, both of Cresskill, N.J., assignors to Lever Brothers Company, New York, N.Y.

Continuation of Ser. No. 670,201, Mar. 25, 1976, abandoned, which is a continuation of Ser. No. 571,185, Apr. 24, 1975, abandoned, which is a continuation of Ser. No. 452,090, Mar. 18, 1974, abandoned, which is a continuation of Ser. No. 246,002, Apr. 20, 1972, abandoned. This application Aug. 22, 1977, Ser. No. 826,422

Int. Cl.[3] C11D *3/04, 3/10*

U.S. Cl. 252—545 **12 Claims**

1. A laundry detergent composition consisting essentially of, based on the total weight of the composition:

(a) 5% to about 50% of a detergent active of nonionic or zwitterionic surface active agent or mixtures thereof;

(b) 10% to about 80% of an alkali metal carbonate;

(c) 0.1% to about 5% of a water-soluble inorganic aluminum compound of aluminum sulfate, aluminum chloride, aluminum bromide, aluminum chlorate, aluminum iodide, aluminum nitrate, or hydrates thereof; and 0 to 55% of a filler of sodium sulfate or sodium chloride.

2. The composition of claim 1 wherein:

(a) said detergent active is present in an amount ranging from about 10% to about 30%; and

(b) said alkali metal carbonate is present in an amount ranging from about 20% to about 60%.

9. The composition of claim 2 wherein said detergent active is an amine oxide.

4,299,740

CONCENTRATED ORGANIC SULPHONATE SOLUTIONS

Edward Messenger, Ramsey House, Camerton, Workington, Cumbria; Douglas E. Mather, 35, Woodland Ave., Hillcrest, and Brinley M. Phillips, 15, Greenlands Ave., both of Whitehaven, Cumbria, all of England

Continuation of Ser. No. 56,958, Jul. 12, 1979, abandoned, which is a continuation of Ser. No. 902,424, May 3, 1978, abandoned, which is a continuation of Ser. No. 759,180, Jan. 13, 1977, abandoned, which is a continuation of Ser. No. 648,086, Jan. 12, 1976, abandoned. This application Jul. 1, 1980, Ser. No. 165,097

Claims priority, application United Kingdom, Jan. 15, 1975, 1745/75

Int. Cl.[3] C07C *143/02, 143/10, 143/16;* **C11D** *1/14*

U.S. Cl. 252—545 **14 Claims**

1. In the method for preparing pourable aqueous olefin sulphonate compositions which exhibit an immobile gel phase in at least part of the concentration range 40 to 55% by weight active, and a mobil "G" phase at an active concentration greater than that at which said immobile gel phase is formed, which method consists essentially in reacting sulphonated olefins having from 8 to 20 carbon atoms with a base selected from the group consisting of sodium hydroxide, potassium hydroxide, sodium carbonate, potassium carbonate, ammonia, ammonium carbonate and primary, secondary and tertiary amines having a total of up to 4 carbon atoms, in the presence of water thereby forming an aqueous solution of olefin sulphonate salt containing up to 8% of electrolyte formed as a by-product of said neutralization, the improvement which consists in performing the reaction in the presence of sufficient water to provide an olefin sulphonate product having a concentration corresponding substantially to the minimum value in its concentration against viscosity curve, which occurs between 60 and 90% by weight and above the lowest concentration at which gel formation is observed and in the substantial absence of organic cosolvents or added electrolyte.

9. A pourable aqueous olefin sulphonate composition consisting essentially of (a) water; (b) between 60 and 90% based on the weight of the composition of an active ingredient which is a mixture of an alkene sulphonate salt with from 40 to 60%, based on the weight of the active ingredient, of a hydroxy alkane sulphonate salt, wherein said salts each comprise an anion having an average of from 8 to 20 carbon atoms and a cation selected from the group consisting of sodium, potassium, ammonium and amines having up to four carbon atoms, and (c) up to about 8% total, based on the weight of the composition of a sulphate of said cation formed as a by-product of a neutralization operation during the production of said sulphate composition and in the substantial absence of organic cosolvents or added eletrolyte, wherein said active ingredient is present as a "G" phase thereby providing a pourable composition.

4,299,741

AQUEOUS RELEASE COATING COMPOSITIONS

Donald F. Doehnert, Millington, N.J., assignor to Permacel, New Brunswick, N.J.

Filed Mar. 6, 1980, Ser. No. 127,702

Int. Cl.[3] C08L *1/00*

U.S. Cl. 260—17.4 CL **9 Claims**

1. An aqueous release composition comprising

(1) a release polymer formed by a polymerizing in parts by weight of

(a) from about 40 to about 80 parts of a higher alkyl acrylate ester represented by the formula

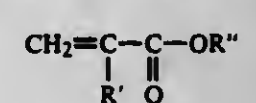

wherein R' is hydrogen or methyl, and R" is a straight chain hydrocarbon radical of from about 12 to 24 carbon atoms,

(b) from about 5 to about 30 parts of a carboxyl supplying monomer selected from the group consisting of acrylic acid, methacrylic acid, maleic acid, maleic anhydride, half esters of maleic acid, itaconic acid and fumaric acid,

(c) from about 10 to about 45 parts of an acrylate derived hardening monomer selected from the group consisting of acrylonitrile, methacrylonitrile, methyl acrylate, ethyl acrylate, methyl methacrylate and ethyl methacrylate;

(2) a base;

(3) a polar solvent wetting agent, said solvent being employed in an amount less than about 25 percent of the volatile portion of the ultimate composition; and

(4) a water-soluble thickening agent said thickening agent being present in such amounts that the viscosity of the release composition does not exceed about 200 centipoises.

4,299,742

ALKYDS

Eimbert G. Belder; John C. Legg, and Robert van der Linde, all of Zwolle, Netherlands, assignors to Internationale Octrooi Maatschappij "OCTROPA" B.V., Rotterdam, Netherlands

Continuation of Ser. No. 914,865, Jun. 12, 1978, abandoned. This application Feb. 4, 1980, Ser. No. 117,955

Claims priority, application United Kingdom, Jun. 13, 1977, 24562/77; Mar. 22, 1978, 11379/78

Int. Cl.[3] C09D *3/64*

U.S. Cl. 260—22 EP **4 Claims**

1. An aqueous dispersion comprising:

an air drying alkyd containing from 1.5 to 2.75 weight percent of polyoxyalkylene radicals, said alkyd having an acid value of from 5 to 20 mg KOH/g and a hydroxyl

value of from 5 to 125 mg KOH/g, the wieght ratio of alkyd to water being from 30:70 to 70:30, a non-ionic emulsifying agent in an amount of from 0.25 to 5% by weight, based on the dispersion; a C_2–C_6 alcohol in an amount of from 0 to 10% by weight based on the dispersion; and a volatile water-soluble base in an amount of from 0.5 to 5% by weight, based on the dispersion; said dispersion having a pH ranging between 5 and 9.

4,299,743
SULFONATE-CONTAINING POLYMER
Percy E. Pierce, Monroeville, and Karl F. Schimmel, Verona, both of Pa., assignors to PPG Industries, Inc., Pittsburgh, Pa.
Filed May 27, 1980, Ser. No. 153,385
Int. Cl.³ C08L *93/00*
U.S. Cl. 260—22 T **26 Claims**

1. Polymer capable of being dissolved or colloidally dispersed in a liquid medium, said polymer containing at least one organic sulfonate-containing group, which group is represented by the formula:

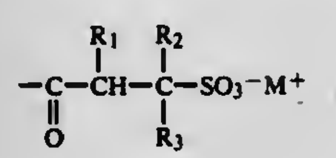

wherein:
R_1, R_2, and R_3 are each individually hydrogen or a monovalent organic group having a molecular weight in the range of from 15 to about 250; and
M^+ is a monovalent cation or a monovalent fractional part of a polyvalent cation, which is ionically associated with the $—SO_3^-$ portion of said organic sulfonate group.

6. The polymer of claim 1 wherein said polymer is an alkyd.

24. A method for producing a product polymer capable of being dissolved or colloidally dispersed in a liquid medium, said method comprising:
(a) condensing each of at least some of the reactive groups of an intermediate polymer containing said reactive groups with the complementary reactive group of a compound containing both said complementary reactive group and ethylenic unsaturation conjugated by at least one carbonyl group, to thereby provide said intermediate polymer with pendent groups containing said ethylenic unsaturation; and
(b) reacting said ethylenic unsaturation of at least some of said pendent groups with bisulfite salt, metabisulfite salt, a mixture of bisulfite salt and metabisulfite salt or precursor thereof to provide at least one sulfonate group to said reacted pendent groups.

4,299,744
HIGH IMPACT POLYAMIDES
David E. Stewart, Bedford, N.H., assignor to American Hoechst Corporation, Somerville, N.J.
Filed Jun. 6, 1980, Ser. No. 157,000
Int. Cl.³ C08L *77/00, 77/08*
U.S. Cl. 260—23 AR **22 Claims**

1. A polyamide composition comprising:
(a) at least 50% of a polyamide resin having a relative viscosity of at least 4.0 measured as a 1% solution in sulfuric acid at 25° C. and having four to eight carbon atoms separating the amide groups thereof;
(b) about 5 to 30% of an impact modifier selected from the group consisting of:
(i) an olefin-acid copolymer comprising at least 50 mole percent based on the copolymer of an α-alkene having 2 to 10 carbon atoms, or mixtures of such α-alkenes, and 0.2 to 25 mole percent based on the copolymer of an α,β-ethylenically unsaturated carboxylic acid having 3 to 8 carbon atoms, mixtures of such acids, or the salts, esters or anhydrides thereof;
(ii) ionomers of the olefin-acid copolymers defined in (i) wherein at least 10% of the carboxylic acid groups are neutralized with metal ions; and
(iii) mixtures of (i) and (ii); and
(c) about 5 to 30% of a stabilizing polyamide resin which contains at least one long-chain amide-forming monomer component having at least 9 atoms separating the amide-forming sites of said monomer.

4,299,745
MULTI-COMPONENT HOT-MELT ADHESIVES
Darryl A. Godfrey, Longview, Tex., assignor to Eastman Kodak Company, Rochester, N.Y.
Filed Apr. 7, 1980, Ser. No. 138,049
Int. Cl.³ C08L *23/26, 31/04*
U.S. Cl. 260—28.5 AV **8 Claims**

1. An adhesive composition capable of being used as a hot melt adhesive comprising a blend of
(a) about 5 to 25 percent by weight of at least one modified polyethylene having a saponification number of about 3 to 60 prepared by reacting polyethylene with an unsaturated polycarboxylic acid, anhydride or ester thereof,
(b) about 50 to 30 percent by weight of at least one ethylene-vinyl acetate copolymer,
(c) about 50 to 20 percent by weight of at least one tackifier resin selected from the group consisting of hydrocarbon resin, polyterpene resin and rosin ester resin, and
(d) about 5 to 15 percent by weight of a microcrystalline wax.

4,299,746
SILICONE RESIN COATING COMPOSITION
Robert B. Frye, Menands, N.Y., assignor to General Electric Company, Waterford, N.Y.
Continuation-in-part of Ser. No. 964,911, Nov. 30, 1978. This application Nov. 6, 1979, Ser. No. 91,716
Int. Cl.³ C08L *83/12;* C09K *9/00*
U.S. Cl. 260—29.2 M **23 Claims**

1. An aqueous coating composition comprising, in intimate admixture:
(i) a dispersion of colloidal silica in a lower aliphatic alcohol-water solution of the partial condensate of a silanol of the formula $RSi(OH)_3$, wherein R is selected from the group consisting of alkyl having from 1 to 3 carbon atoms and aryl, wherein at least 70 weight percent of the silanol is $CH_3Si(OH)_3$; and
(ii) a small amount of an ultraviolet light absorbing compound, said composition containing 10 to 50 weight percent solids, said solids consisting essentially of 10 to 70 weight percent colloidal silica and 30 to 90 weight percent of the partial condensate, and wherein said composition has a pH of from 6.8 to 7.8.

4,299,747
REACTION PRODUCTS OF A POLYGLYCIDYL ETHER OF A POLYPHENOL AND AN AMINO ACID AND AQUEOUS SOLUBILIZED PRODUCTS THEREFROM
William J. Birkmeyer, Oakmont, Pa., assignor to PPG Industries, Inc., Pittsburgh, Pa.
Filed Mar. 8, 1977, Ser. No. 775,490
Int. Cl.³ C08L *63/02;* C08K *5/09, 5/18;* C08J *3/06*
U.S. Cl. 260—29.6 NR **19 Claims**

1. A curable, carboxyl-containing precondensate prepared by reacting at a temperature from about 200° to about 350° F. (1) a polyglycidyl ether of a polyphenol with (2) an amino-substituted aromatic carboxylic acid selected from the class consisting of anthranilic acid, p-aminobenzoic acid, m-aminobenzoic acid, 3-amino-p-toluic acid, 3-amino-salicylic acid, 3-amino-4-methoxybenzoic acid, 6-amino-m-toluic acid, 3-amino-4-chlorobenzoic acid, 2-amino-5-nitrobenzoic acid, 2-nitro-5-aminobenzoic acid and 5-amino-isophthalic acid; said precondensate having an acid number of at least 15.

4,299,748
AQUEOUS COATING COMPOSITIONS CONTAINING ELECTROCONDUCTIVE COPOLYMER
Yoshio Hashizume; Masanori Itoh, both of Saitama; Yasumasa Sakai, Amagasaki, and Akiyosi Kamita, Himeji, all of Japan, assignors to Daicel Ltd., Sakai, Japan
Filed Dec. 14, 1978, Ser. No. 969,373
Claims priority, application Japan, Dec. 20, 1977, 52/154123
Int. Cl.³ C08L *33/02, 41/00*
U.S. Cl. 260—29.6 RW **8 Claims**

1. An aqueous coating composition comprising an aqueous dispersion containing a copolymer substantially in the form of particles and having a glass transition temperature of 20° to 100° C., the copolymer comprising 0.5 to 20.0 parts by weight of component A and 100 parts by weight of component B, wherein component A is a polymer of (1) 100 to 25% by weight of at least one electroconductive vinyl monomer selected from the group consisting of a compound represented by Formula I:

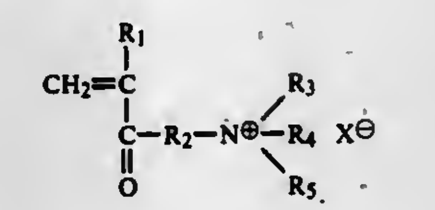

(I)

wherein
R_1 is hydrogen or methyl; R_2 is $—OCH_2CH_2—$,

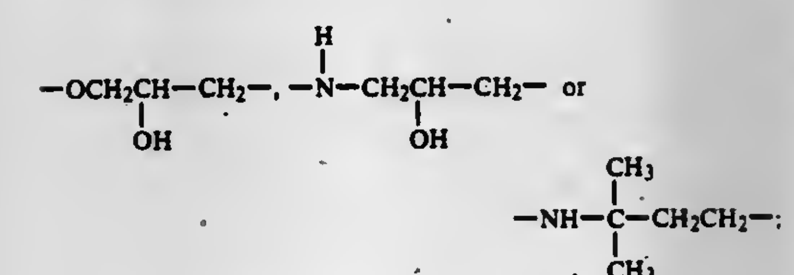

and R_4 are each methyl or ethyl; R_5 is C_nH_{2n+1} where n is zero or an integer of 1 to 4,

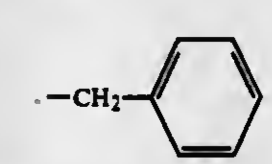

or $CH_2CH_2CH_2SO_3^{\ominus}$; and $X^{\ominus}$ is $Cl^{\ominus}$ or $Br^{\ominus}$, or is absent when R_5 is $CH_2CH_2CH_2SO_3^{\ominus}$;
a compound represented by Formula II:

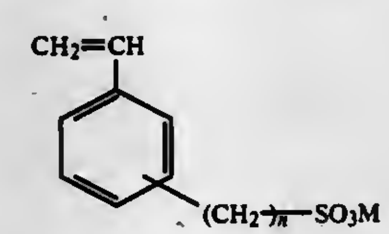

(II)

wherein n is 0 or 1, and M is an alkali metal or NH_4, and a compound represented by Formula III:

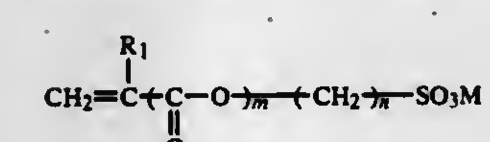

(III)

wherein m is 0 or 1, n is an integer of 1 to 4, R_1 is hydrogen or methyl, and M is an alkali metal or NH_4 and (2) 0 to 75% by weight of a vinyl monomer copolymerizable with the electroconductive vinyl monomer; and wherein component B is a polymer of (a) 0 to 10 by weight of at least one of α,β-unsaturated carboxylic acid and salts thereof, (b) 10–98% by weight of at least one of alkyl acrylates wherein the alkyl has 1 to 12 carbon atoms and alkyl methacrylates wherein the alkyl has 1 to 20 carbon atoms and (c) 0.1 to 80% by weight of at least one copolymerizable vinyl monomer, wherein 0.1 to 30% by weight of said copolymerizable vinyl monomer is a hydroxyalkyl ester of α,β-unsaturated carboxylic acid and any remaining copolymerizable vinyl monomers are selected from the group consisting of a vinyl-substituted aromatic hydrocarbon, α,β-unsaturated aliphatic nitrile, vinyl ester of organic acid, vinyl halid, α,β-unsaturated carboxylic acid amide, α,β-unsaturated carboxylate having an epoxy group and aminoalkyl ester of α,β-unsaturated carboxylic acid; the copolymer being prepared by polymerizing said component A monomers in an aqueous medium to form an aqueous dispersion of component A and polymerizing said component B monomers in the resulting dispersion of component A.

4,299,749
FLOOR COATING COMPOSITION
Francis L. McCarthy, Pompton Plains, N.J., and Thomas H. Bach, Pearl River, N.Y., assignors to Sterling Drug Inc., New York, N.Y.
Continuation-in-part of Ser. No. 163,986, Jun. 30, 1980, abandoned. This application Oct. 16, 1980, Ser. No. 197,546
Int. Cl.³ C08L *33/02*
U.S. Cl. 260—29.6 Z **17 Claims**

1. A stable aqueous self-stripping, cleaning, coating and polishing composition consisting essentially of:
(a) from about 4 to 13% by weight of a water-insoluble, alkali-soluble addition polymer comprising from about 12 to 25% by weight of the addition polymer of at least one hydrophilic monomer selected from the group consisting of acrylic acid and methacrylic acid interpolymerized with from about 88 to 75% by weight of the addition polymer of at least one hydrophobic monomer selected from the group consisting of alkyl acrylate and alkyl methacrylate, where alkyl has from 1 to 8 carbon atoms, said addition polymer having an intrinsic viscosity at 30° C. in tetrahydrofuran of between about 0.05 and 0.2 dl/g.;
(b) from about 1 to 3% by weight of a fugitive plasticizer selected from the group consisting of diglyme, the mono-alkyl ether of diethylene glycol, the mono-alkyl ether of dipropylene glycol, 2-butoxyethanol and 3-methoxybutanol-(1), where alkyl has from 1 to 5 carbon atoms;
(c) from about 0.7 to 1.5% by weight of tributoxyethyl phosphate;
(d) from about 0.05 to 1.5% by weight of tetrasodium ethylenediaminetetraacetate;
(e) from about 0.005 to 0.02% by weight of an anionic or nonionic fluorocarbon surfactant;
(f) from about 0.0001 to 0.003% by weight of a dimethylpolysiloxane antifoaming agent;
(g) from about 0.002 to 0.02% by weight of 1,2-benzoisothiazolin-3-one, said 1,2-benzothiazolin-3-one being in the form of a water-soluble salt;
(h) from about 0.05 to 0.3% by weight of an alkali-metal bicarbonate selected from the group consisting of sodium bicarbonate and potassium bicarbonate;
(i) from 0% to about 0.3% by weight of formaldehyde;
(j) from 0% to about 0.2% by weight of caprolactam;
(k) from 0% to about 5% of an alkali-soluble copolymer of styrene and maleic anhydride, said copolymer having a styrene-maleic anhydride ratio of from 1:1 to 3:1, a number average molecular weight of from 1600 to 1900 and an acid number of 220 to 480;
(l) from about 75 to 94% by weight of water; and
(m) ammonia to provide a pH of 9 to 9.7;
said composition having a solids content of from about 5 to 15% by weight.

4,299,750

NOVEL PARTIALLY ACETYLENE END-CAPPED POLYIMIDE OLIGOMERS

Patricia A. Antonoplos, Huntington Beach, Calif., and William J. Heilman, Houston, Tex., assignors to Gulf Oil Corporation, Pittsburgh, Pa.

Filed May 3, 1979, Ser. No. 35,746

Int. Cl.[3] C08G *73/10, 73/12*

U.S. Cl. 260—30.2 **14 Claims**

1. A product selected from the group consisting of:

A. An acetylene end-capped polyimide oligomer having the structure:

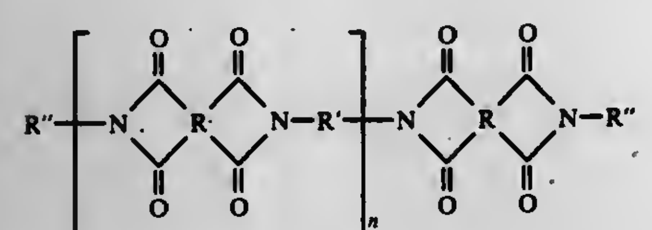

where R has the structure:

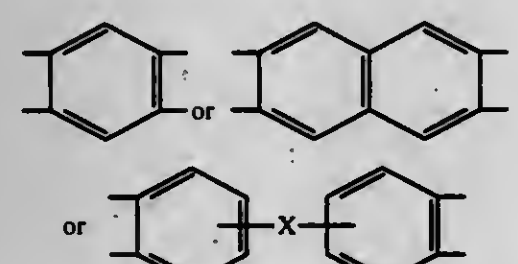

where X is

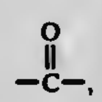

—O—, —CH₂—, —S—,

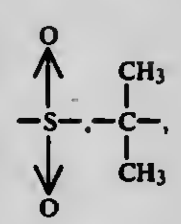

—CF₂—, or a bond, where R' is selected from the group consisting of a phenylene group, a naphthylene group, or

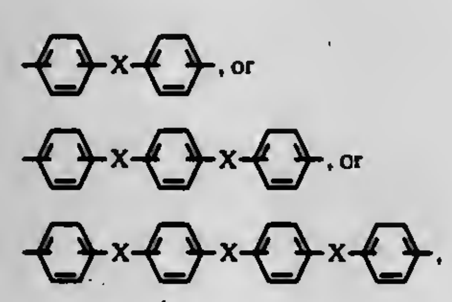

where X is as defined above;

where R'' consists of a mixture of about 20–30 mol % of an aryl group and the balance an acetylene substituted aryl group; and where n has an average value of from 1 to about 4;

B. A first precursor of a partially acetylene end-capped polyimide oligomer of (A) having the structure:

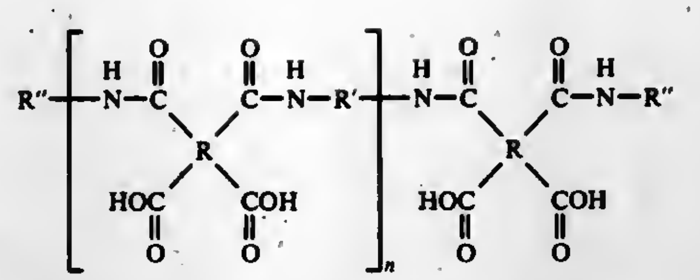

where R, R' and R'' and n are as defined above; and

C. A second precursor of a partially acetylene end-capped polyimide oligomer of (A) having the structure:

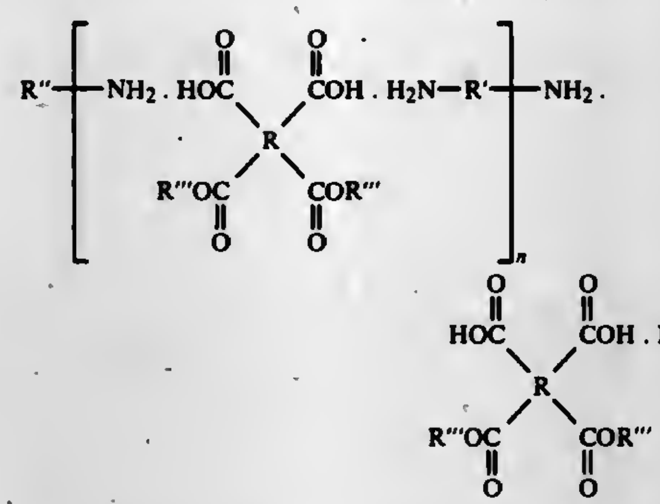

where R, R' and R'' and n are as defined above and R''' is the alcohol moiety from which the diester of the aromatic tetracarboxylic acid was prepared.

4,299,751

COLD-SETTING, POLYURETHANE-BASED MOLDING MATERIAL BINDER

Thorwald Born, Bad Dürkheim, Fed. Rep. of Germany, assignor to Huttenes-Albertus Chemische Werke GmbH, Dusseldorf, Fed. Rep. of Germany

Filed Jun. 11, 1980, Ser. No. 158,886

Claims priority, application Fed. Rep. of Germany, Jun. 13, 1979, 2923840

Int. Cl.[3] C08L *75/04*

U.S. Cl. 260—30.4 N **4 Claims**

1. Cold-setting moulding material binder with a polyurethane base for moulding material mixtures for producing moulds and cores, comprising a polyol with at least 2 OH groups in the molecule and a polyisocyanate with at least 2 NCO groups in the molecule, characterised in that the polyol is a monomeric, mononuclear to trinuclear phenol with at least two phenolic OH groups per molecule which is dissolved in a concentration of 5 to 15% by weight of OH groups in a polar, high-boiling solvent which is inert with respect to the urethane formation and with a δ_h value of at least 3.5.

4,299,752

METALLIC POLYMERIC DISPERSION COATING COMPOSITION

Albert G. Armour, Tervuren, Belgium, assignor to E. I. Du Pont de Nemours and Company, Wilmington, Del.

Continuation-in-part of Ser. No. 536,324, Dec. 24, 1974, abandoned, which is a continuation-in-part of Ser. No. 335,119, Feb. 23, 1973, abandoned, which is a continuation-in-part of Ser. No. 162,651, Jul. 14, 1971, abandoned, which is a continuation-in-part of Ser. No. 889,679, Dec. 31, 1969, abandoned, which is a continuation-in-part of Ser. No. 632,195, Apr. 20, 1967, abandoned. This application Dec. 4, 1978, Ser. No. 966,257

Int. Cl.[3] C08K *5/10*

U.S. Cl. 260—31.4 R **5 Claims**

1. In a metallic pigmented organosol composition having a dispersed phase of a polymer which is a homopolymer or copolymer of monomers selected from the group consisting of acrylic acid, methacrylic acid, esters of acrylic acid formed from alcohols having 1 through 18 carbon atoms, esters of methacrylic acid formed from alcohols having 1 through 18 carbon atoms, styrene, N-N-dimethylaminoethyl methacrylate, N-t-butylaminoethyl methacrylate and acrylonitrile and metallic flake pigmentation; the improvement comprising: a continuous phase of:

(1) at least one volatile organic liquid present in an amount sufficient to keep said polymer in the dispersed phase, the volatile organic liquid being a nonsolvent for the dispersed phase; and

(2) at least one coalescing solvent which is an organic liquid having a nonsolvent tolerance value of from about 20 to about 70 and an evaporation rate of less than about 0.5 times the evaporation rate of the volatile organic liquid, the coalescing solvent being present in an amount of from about 0.6 to about 2.5 parts by weight coalescing solvent per 1 part by weight of the dispersed polymer, the coalescing solvent being a solvent for the dispersed polymer and being miscible in the volatile organic liquid,

said composition being capable of yielding a coating having metallic glamor upon the evaporation of the continuous phase.

4,299,753

Patent Not Issued For This Number

4,299,754

SURFACE TREATING AGENT AND METHOD FOR ITS PRODUCTION

Teiichi Shiomi; Tadao Saito, both of Ohtake, and Riichiro Nagano, Yamaguchi, all of Japan, assignors to Mitsui Petrochemical Industries Ltd., Tokyo, Japan

Filed Oct. 2, 1979, Ser. No. 81,200

Claims priority, application Japan, Oct. 4, 1978, 53-121438

Int. Cl.[3] C08K *5/01*

U.S. Cl. 260—33.6 UA **7 Claims**

1. A process for preparing a surface treating agent, which comprises dissolving a proplyene-ethylene copolymer having a propylene content of 50 to 75 mole% and a crystallinity determined by an X-ray diffraction method of 2 to 20% in an organic solvent and graft copolymerizing it with maleic acid or maleic anhydride in the presence of a radical generator to provide an organic solvent solution of the modified copolymer having a concentration of 10 to 100 kg per cubic meter of the solvent.

4,299,755

NON-AQUEOUS DISPERSIONS OF WATER-SOLUBLE POLYMERS

Berthold Keggenhoff, and Hans J. Rosenkranz, both of Krefeld, Fed. Rep. of Germany, assignors to Bayer Aktiengesellschaft, Fed. Rep. of Germany

Filed Jun. 24, 1980, Ser. No. 162,395

Claims priority, application Fed. Rep. of Germany, Jun. 28, 1979, 2926103

Int. Cl.[3] C08J *3/08;* **C08K** *5/01;* **C08L** *33/00, 91/00*

U.S. Cl. 260—23 AR **4 Claims**

1. A non-aqueous dispersion of a water-soluble polymer consisting of

(a) 45–60 parts by weight of a water-soluble polymer prepared by the addition polymerization of an unsaturated water-soluble monomer;

(b) 25–45 parts by weight of a dispersing oil which is a liquid aliphatic or aromatic hydrocarbon, a substitution product thereof or a mixture thereof;

(c) 3–8 parts by weight of a member selected from the group consisting of a sorbitan monooleate, sorbitan stearate, sorbitan laurate and sorbitan plamitate; and

(d) 3–8 parts by weight of the reaction product of 3 to 10 mol of ethylene oxide and 1 mol of a member selected from the group consisting of C_8–C_{20} fatty alcohols and C_{10}–C_{20} fatty acids, the sum of components (a) to (d) being 100 parts by weight.

4,299,756

POLYESTER OF PHENYL-4-HYDROXYBENZOIC ACID, AROMATIC DIOL, AND AROMATIC DIACID CAPABLE OF FORMING AN ANISOTROPIC MELT

Gordon W. Calundann, Somerset, N.J., assignor to Celanese Corporation, New York, N.Y.

Filed Mar. 10, 1980, Ser. No. 128,759

Int. Cl.[3] C08G *63/06*

U.S. Cl. 260—40 R **46 Claims**

1. A melt processable wholly aromatic polyester capable of forming an anisotropic melt phase at a temperature below approximately 350° C. consisting essentially of moieties I, II, III, and IV wherein:

I is selected from the group consisting of:

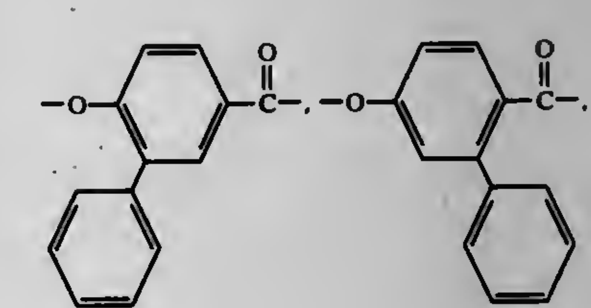

and mixtures thereof, and

II is selected from the group consisting of:

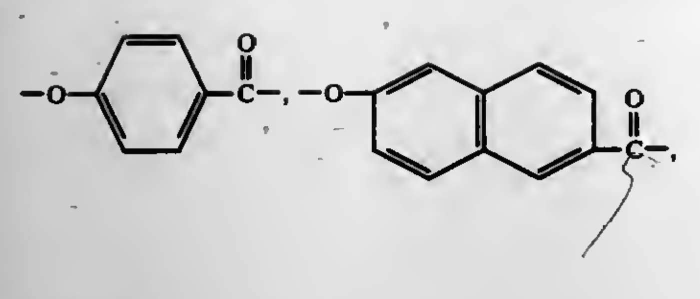

and mixtures thereof,

III is at least one dioxy aryl moiety of the formula:

—O—Ar'—O—,

where Ar' is a divalent radical comprising at least one aromatic ring, and

IV is at least one dicarboxyl aryl moiety of the formula:

$$-\overset{O}{\overset{\|}{C}}-Ar''-\overset{O}{\overset{\|}{C}}-,$$

wherein Ar'' is a divalent radical comprising at least one aromatic ring, and

wherein at least some of the hydrogen atoms present upon the aromatic ring of moieties III and IV optionally may be replaced by substitution selected from the group consisting of an alkyl group of 1 to 4 carbon atoms, an alkoxy group of 1 to 4 carbon atoms, halogen, a phenyl group, and mixtures thereof; and wherein moiety I is present in a concentration of approximately 20 to 85 mole percent, moiety II is present in a concentration of approximately 0 to 40 mole percent, moiety III is present in a concentration of in excess of 5 up to approximately 40 mole percent, and moiety IV is present in a concentration in excess of 5 up to approximately 40 mole percent.

4,299,757

AROMATIC POLYETHER RESIN COMPOSITION

Isao Kuribayashi, Yokosuka; Jurou Ohzeki, and Kiyoshi Shimamura, both of Yokohama, all of Japan, assignors to Asahi-Dow Limited, Tokyo, Japan

Filed Apr. 25, 1980, Ser. No. 143,860

Claims priority, application Japan, May 1, 1979, 54-52467

Int. Cl.³ C08K *7/14;* C08L *51/06, 71/04*

U.S. Cl. 260—42.18 22 Claims

1. An aromatic polyether resin composition comprising a continuous resin phase principally composed of an aromatic polyether resin and dispersed phases which are dispersed in said continuous resin phase, wherein said dispersed phases comprise (a) a hydrogenated product of a block copolymer of a vinyl aromatic hydrocarbon and an aliphatic conjugated diene hydrocarbon and (b) at least one polymer selected from the group consisting of poly-olefins, ethylene-vinyl aliphatic acid copolymers and ethylene-unsaturated carboxylic acid ester copolymers, said components (a) and (b) containing (c) an aromatic vinyl compound polymer grafted thereon.

21. A composition according to claim 1, further containing an effective amount of stabilizers and a reinforcing amount of glass fibers.

4,299,758

HALOGENATED CYCLOPENTADIENE DIADDUCTS OF DIACETYLENIC COMPOUNDS

James A. Hinnenkamp, and Jack Kwiatek, both of Cincinnati, Ohio, assignors to National Distillers and Chemical Corp., New York, N.Y.

Filed Dec. 22, 1977, Ser. No. 863,185

Int. Cl.³ C07C *23/24;* C08K *5/02, 5/06*

U.S. Cl. 260—45.7 R 7 Claims

1. A compound of the formula

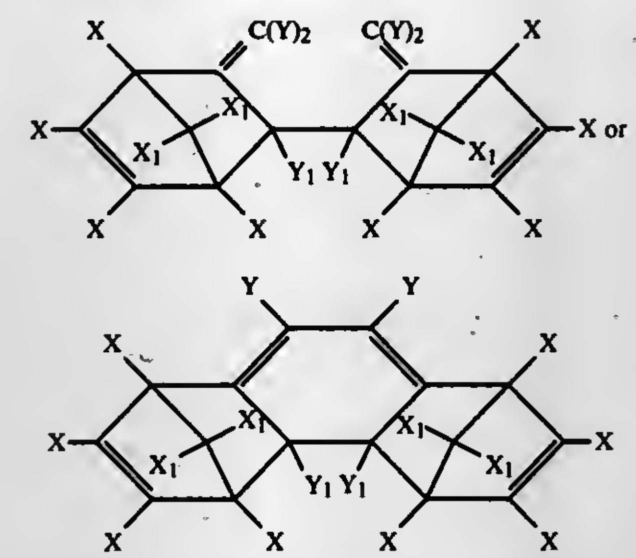

wherein each X is independently selected from the group consisting of hydrogen, chlorine, bromine and fluorine, each X_1 is independently selected from the group consisting of hydrogen, chlorine, bromine, fluorine, and alkyl or alkoxy of 1 to 10 carbon atoms and halogen-substituted alkyl or alkoxy of 1 to 10 carbon atoms and each Y and Y_1 is independently selected from the group consisting of hydrogen, chlorine, bromine, fluorine, aryl, alkyl or alkoxy of 1 to 10 carbon atoms and halogen-substituted alkyl or alkoxy of 1 to 10 carbon atoms.

6. A flame retardant polymeric composition comprising a polymer and a flame retardant amount of the compound of claim 1.

4,299,759

METHOD FOR INHIBITING THE THERMAL OR ULTRAVIOLET DEGRADATION OF THERMOPLASTIC RESIN AND THERMOPLASTIC RESIN COMPOSITION HAVING STABILITY TO THERMAL OR ULTRAVIOLET DEGRADATION

Shigeo Miyata, Takamatsu, and Masataka Kuroda, Kagawa, both of Japan, assignors to Kyowa Chemical Industry Co. Ltd., Tokyo, Japan

Filed May 16, 1980, Ser. No. 150,651

Int. Cl.³ C08K *3/20*

U.S. Cl. 260—45.7 R 8 Claims

1. A method for inhibiting the thermal or ultraviolet degradation of a thermoplastic resin containing halogens and/or a thermoplastic resin containing a catalyst-derived acidic subcomponent excepting olefinic resins, which comprises mixing said thermoplastic resin with about 0.01 to about 5 parts by weight, per 100 parts by weight of said resin, of a hydrotalcite of the following formula

$$Mg_{1-x}Al_x(OH)_2A_{x/n}^{n-}\cdot mH_2O$$

wherein $0<x\leq 0.5$, m is a positive number, and A^{n-} represents an anion having a valence of n, or a product resulting from surface-treatment of said hydrotalcite with an anionic surface-active agent, said hydrotalcite having a BET specific surface area of not more than 30 m²/g.

4,299,760

FLAME RETARDED, RUBBER-MODIFIED, POLYPHENYLENE ETHER RESIN COMPOSITIONS

Albrecht H. Granzow, Somerset, N.J., assignor to American Cyanamid Company, Stamford, Conn.

Filed Sep. 24, 1979, Ser. No. 78,533

Int. Cl.³ C08L *71/04*

U.S. Cl. 260—45.9 KA 5 Claims

1. A flame retardant composition comprising a homogeneous blend of polymers containing about 10 to 90 parts by weight of polyphenylene ether resin, about 90 to 10 parts by weight of a polystyrene, and a flame retarding, effective amount of a compound represented by the formula:

$$(NCCH_2CH_2)_2-\overset{O}{\overset{\|}{P}}-Y-\overset{O}{\overset{\|}{P}}\!\!-\!(CH_2CH_2CN)_2$$

wherein Y is selected from:

(1) alkylene, $-CH_2-_n$, wherein n is an integer from 1 to 4;

(2) substituted xylylene

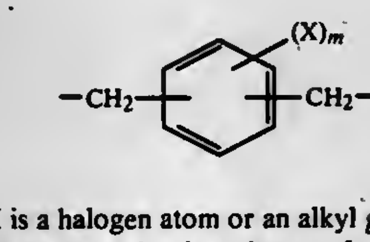

wherein X is a halogen atom or an alkyl group containing 1 to 4 carbon atoms and m is an integer from 1 to 4, with the proviso that when no X is halogen the methylene groups are meta to each other;

(3) the group,

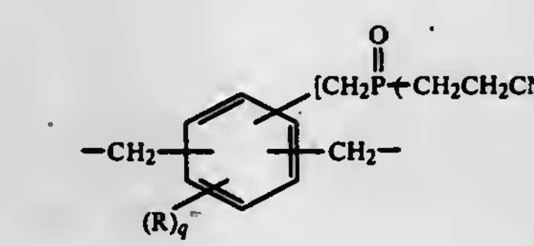

wherein R is alkyl of 1 to 4 carbon atoms, p is an integer of at least 1 and q is O or 4-p;

(4) the group,

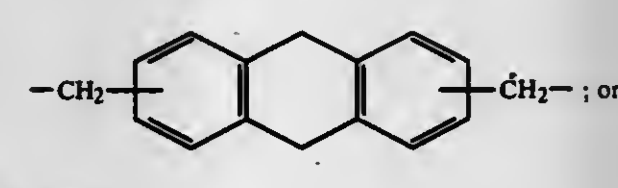

(5) the group,

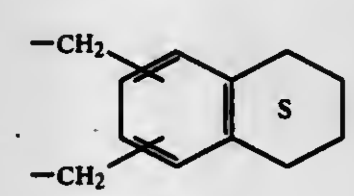

4,299,761

POLYMER CONCRETE COMPOSITIONS, METHODS OF APPLICATION THEREOF, AND POLYMERIZED PRODUCTS THEREOF

William D. Emmons, Huntingdon Valley, and Kayson Nyi, Sellersville, both of Pa., assignors to Rohm and Haas Company, Philadelphia, Pa.

Filed Mar. 19, 1979, Ser. No. 21,660

The portion of the term of this patent subsequent to Jun. 27, 1995, has been disclaimed.

Int. Cl.³ C08J *3/20*

U.S. Cl. 260—42.53 9 Claims

1. A polymer concrete composition comprising an essentially anhydrous slurry of (a) an inert inorganic particulate aggregate having a void fraction of less than 0.37 in (b) dicyclopentenyloxyethyl acrylate or dicyclopentenyloxyethyl methacrylate or a mixture thereof, the slurry containing dissolved therein a curing catalyst consisting essentially of (c) an organic peroxide and/or (d) a polyvalent metal salt drier, the proportion of component (b) being such as to make the composition of workable, especially trowellable, consistency, the amount of (c) when present, being in the range of about 0.1 to 3 weight percent, and the amount of (d) when present, being in the range of about 0.0005 to about 2 weight percent, the ranges of (c) and (d) both being based on the weight of component (b).

4,299,762

A-30912D NUCLEUS

Bernard J. Abbott, Greenwood, and David S. Fukuda, Brownsburg, both of Ind., assignors to Eli Lilly and Company, Indianapolis, Ind.

Continuation-in-part of Ser. No. 103,268, Dec. 13, 1979, abandoned. This application Aug. 25, 1980, Ser. No. 181,449

Int. Cl.³ A61K *37/00;* C07C *103/52;* C12P *21/04*

U.S. Cl. 260—112.5 R 20 Claims

1. A-30912D nucleus of the formula

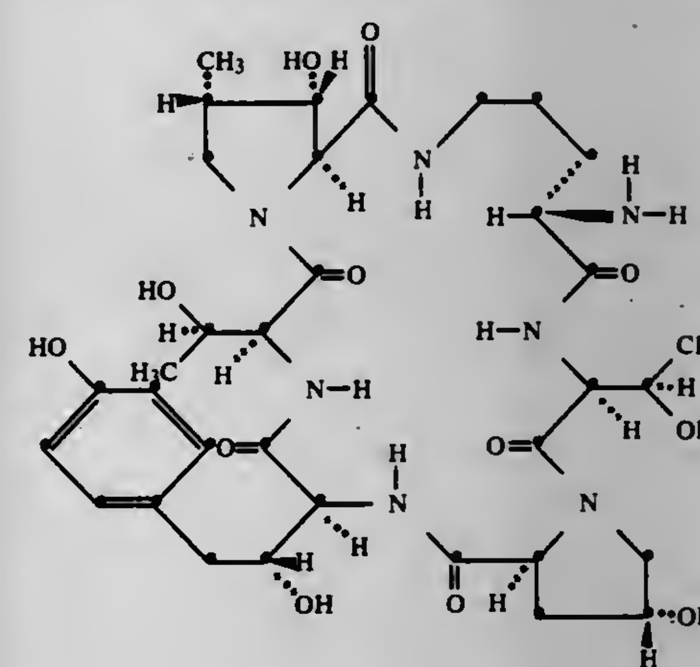

and the acid addition salts thereof.

4,299,763

A-30912B NUCLEUS

Bernard J. Abbott, Greenwood, and David S. Fukuda, Brownsburg, both of Ind., assignors to Eli Lilly and Company, Indianapolis, Ind.

Continuation-in-part of Ser. No. 103,121, Dec. 13, 1979, abandoned. This application Aug. 25, 1980, Ser. No. 181,437

Int. Cl.³ C07C *103/52;* A61K *37/00;* C12P *21/04*

U.S. Cl. 260—112.5 R 20 Claims

1. A-30912B nucleus of the formula

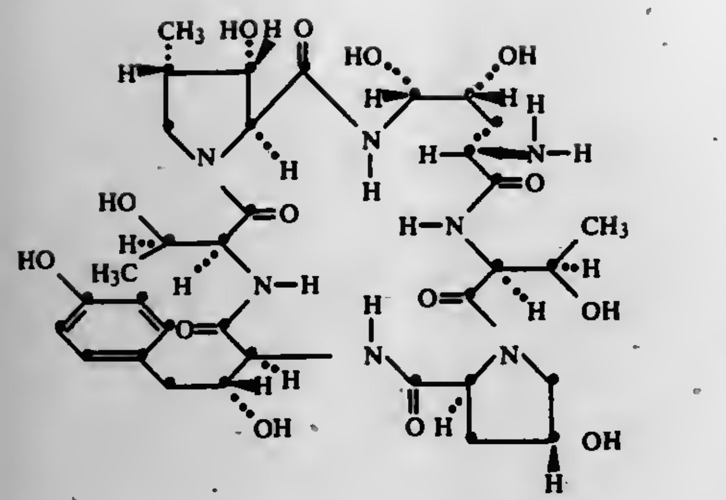

and the acid addition salts thereof.

4,299,764

AZO REACTIVE DYESTUFFS

Horst Jager, Leverkusen, Fed. Rep. of Germany, assignor to Bayer Aktiengesellschaft, Leverkusen, Fed. Rep. of Germany

Filed Jul. 5, 1979, Ser. No. 54,726

Claims priority, application Fed. Rep. of Germany, Jul. 20, 1978, 2831912

Int. Cl.[3] **C09B** *29/22*

U.S. Cl. 260—153 **10 Claims**

4. Dyestuffs of the formula

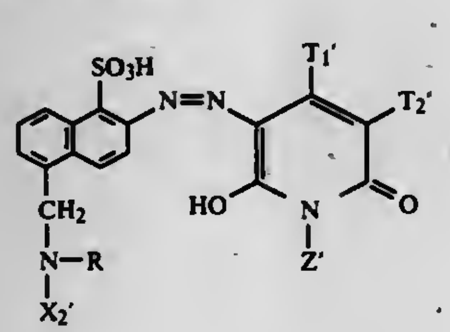

wherein

R and T_1' = lower alkyl,

T_2' =

$$-\underset{\underset{O}{\|}}{C}-NH_2,\ -CH_2-SO_3H,$$

halogen, nitro, sulpho, cyano or H,

Z' = lower alkyl and

X_2' = dichlorotriazinyl, monochlorotriazinyl, trihalogenopyrimidinyl, dihalogenopyrimidinyl or 2,3-dichloroquinoxaline-6-carbonyl.

4,299,765

HERBICIDAL ACTIVE SULFOXIDE COMPOUNDS

Harry Tilles, El Cerrito, Calif., assignor to Stauffer Chemical Company, Westport, Conn.

Division of Ser. No. 567,910, Apr. 14, 1975, which is a continuation-in-part of Ser. No. 371,325, Jun. 18, 1973, abandoned, which is a continuation-in-part of Ser. No. 280,385, Aug. 14, 1972, abandoned. This application Nov. 20, 1978, Ser. No. 962,521

Int. Cl.[3] **A01N** *14/16;* **C07D** *211/16, 215/00, 295/20*

U.S. Cl. 260—239 BF **1 Claim**

1. The compound having the formula

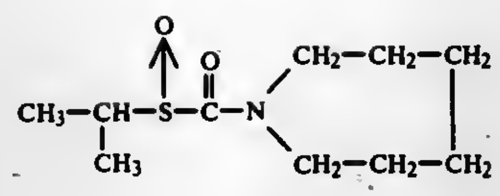

4,299,766

PROCESS FOR PREPARING ALICYCLIC ISOCYANATES

Ryuichi Yamamoto; Yutaka Hirai; Akinobu Takagi, and Zyunzi Tashima, all of Omuta, Japan, assignors to Mitsui Toatsu Chemicals, Inc., Tokyo, Japan

Filed Jul. 21, 1980, Ser. No. 170,333

Claims priority, application Japan, Jul. 20, 1979, 54-91625

Int. Cl.[3] **C07D** *223/10, 211/76, 207/26*

U.S. Cl. 260—239.3 R **4 Claims**

1. A process for the preparation of lactam-blocked products of alicyclic isocyanates, comprising the steps of:

(a) blocking an aromatic isocyanate with lactam, wherein said aromatic isocyanate is selected from the group consisting of tolylene diisocyanate diphenylmethanediisocyanate 1,5-naphthalenediisocyanate phenylene diisocyanate phenylisocyanate or tolylisocyanate, and wherein said lactam is selected from the group consisting of 2-pyrrolidone, ε-caprolactam or ω-laurolactam; and

(b) subjecting the blocked product to catalytic hydrogenation with a catalyst containing 0.05% to 20% by weight rhodium, at 50° to 150° C., in the presence of a solvent in an amount of 5% to 50%, in a hydrogen pressure atmosphere of about 10 to 250 atmospheres, in order to obtain the blocked product of the corresponding alicyclic isocyanate.

4,299,767

BENZODIAZEPINE DERIVATIVES

Albert E. Fischli, and André Szente, both of Riehen, Switzerland, assignors to Hoffmann-La Roche Inc., Nutley, N.J.

Division of Ser. No. 63,288, Aug. 2, 1979, Pat. No. 4,251,443. This application Sep. 11, 1980, Ser. No. 186,021

Claims priority, application Switzerland, Aug. 11, 1978, 8563/78; Jun. 6, 1979, 5270/79; Jul. 5, 1979, 2696/79

Int. Cl.[3] **C07D** *243/24*

U.S. Cl. 260—293.3 D **2 Claims**

1. A compound of the formula

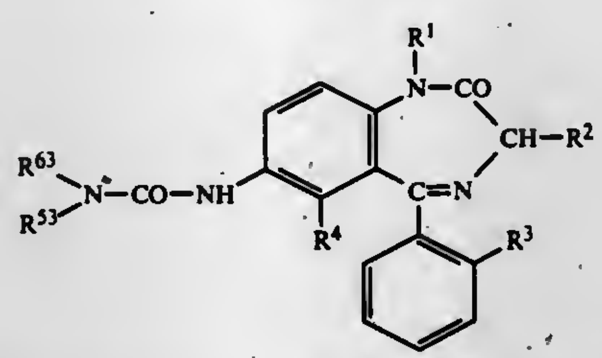

wherein R^1 represents lower alkyl, R^2 represents a hydogen atom or lower alkyl, R^3 represents a halogen atom and R^4 represents a hydrogen or halogen atom and either R^{53} represents tertiary butoxy carbonyl, benzyloxycarbonyl or benzyl and R^{63} represents lower alkyl, phenyl monohalophenyl or lower alkoxyphenyl or benzyl or a group of the formula

—A—O—Y

in which A represents a lower alkylene group and Y represents tertiary butoxy carbonyl, benzyloxycarbonyl, benzyl, tetrahydropyranyl, 2-methoxy-2-propyl, methoxymethyl, β-methoxyethoxymethyl, tertiary butyl or acetyl or R^{53} represents a hydrogen atom or lower alkyl and R^{63} represents a group of the formula —A—O—Y as above with the proviso that R^{53} represents tertiary butoxy carbonyl, benzyloxycarbonyl or benzyl when R^{63} represents a group of the formula —A—O—y as above and the group denoted by Y is tertiary butoxycarbonyl.

4,299,768

1-PYRROLE- AND 1-PYRROLIDINE-CARBOXYLIC ACID DERIVATIVES AND PROCESS FOR PREPARING THE SAME

Charles Pigerol, Saint-Ouen; Michel Schaefer, Metz, both of France, and Souli Nanthavong, Vientiane, Laos, assignors to LABAZ, Paris, France

Filed Jun. 11, 1979, Ser. No. 47,585

Claims priority, application France, Jun. 12, 1978, 78 17424

Int. Cl.[3] **C07D** *207/22, 207/10*

U.S. Cl. 260—326.25 **9 Claims**

1. 2,5-Dihydro-1-pyrrole-carboxylic acid derivatives corresponding to the formula:

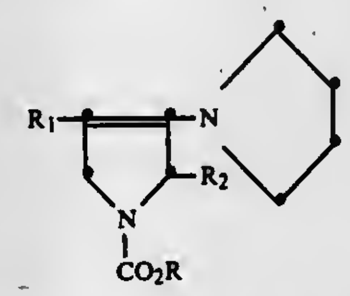

wherein R represents an alkyl radical having from 1 to 4 carbon atoms, R_1 represents a 3-oxo-alkyl radical

$$R_3-\overset{\overset{O}{\|}}{C}-CH_2-CH_2-$$

or a 3-oxo-alkenyl radical

$$R_3-\overset{\overset{O}{\|}}{C}-CH{=}CH-,$$

R_2 represents hydrogen or R_1 and R_2, when they are identical, each represents

$$R_3-\overset{\overset{O}{\|}}{C}-CH_2-CH_2-\text{ or }R_3-\overset{\overset{O}{\|}}{C}-CH{=}CH-,$$

R_3 representing an alkyl radical having from 1 to 5 carbon atoms.

4,299,769

ω-HETEROAROYL(PROPIONYL OR BUTYRYL)-L-PROLINES

Francis J. McEvoy, Pearl River, N.Y.; William B. Wright, Jr., Woodcliff Lake, N.J.; Gary H. Birnberg, Spring Valley, and Jay D. Albright, Nanuet, both of N.Y., assignors to American Cyanamid Company, Stamford, Conn.

Filed Apr. 28, 1980, Ser. No. 144,741

Int. Cl.[3] **A01N** *43/36, 43/54;* **C07D** *409/06, 407/06*

U.S. Cl. 260—326.35 **7 Claims**

1. A compound selected from the group consisting of those of the formulae:

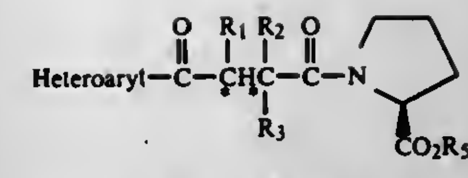

(I)

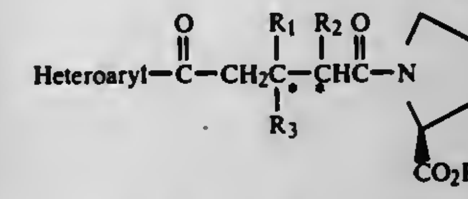

(II)

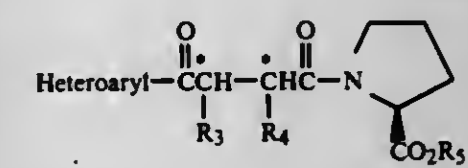

(III)

wherein R_1 is hydrogen or alkyl having 1-3 carbon atoms; R_2 is hydrogen or alkyl having 1-3 carbon atoms; R_3 is mercapto, formylthio, benzoylthio, alkanoylthio having 2-4 carbon atoms or moieties of the formulae: $-S-CO_2CH_2C_6H_5$, $-S-CO_2R_5$, $-S-CH_2CO_2R_5$ or $-S-CO{-}N(R_5)_2$; R_4 is hydrogen or alkyl having 1-4 carbon atoms; R_5 is hydrogen or alkyl having 1-4 carbon atoms; and Heteroaryl is selected from the group consisting of moieties of the formulae:

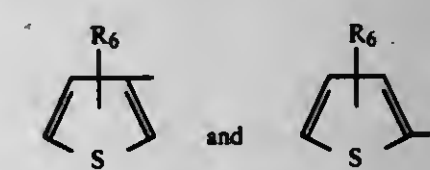

wherein R_6 is hydrogen, fluoro, chloro, bromo or alkyl having 1-4 carbon atoms; and the pharmacologically acceptable cationic salts thereof when R_5 is hydrogen.

4,299,770

RECOVERY OF SUBSTITUTED PYRROLE ACETATE

Muthunadar P. Periasamy, Creve Coeur, Mo., assignor to Mallinckrodt, Inc., St. Louis, Mo.

Filed May 29, 1980, Ser. No. 154,377

Int. Cl.[3] **C07D** *207/337, 409/06*

U.S. Cl. 260—326.47 **10 Claims**

1. A process for the recovery and purification of an aroyl-1,4-di(lower alkyl)-pyrrole-2-acetate product from an aqueous medium containing said pyrrole acetate, in either its salt or lower alkyl ester form, said process comprising:

(A) saponifying that aroyl-1, 4-di(lower alkyl)-pyrrole-2-acetate which is present in its lower alkyl ester form under saponifying conditions to thereby convert said ester to salt form in the aqueous medium;

(B) cooling said aqueous medium to a temperature and for a time period sufficient to precipitate a crop of said aroyl-1,4-di(lower alkyl)-pyrrole-2-acetate salt, which crop is insoluble in the remaining aqueous mother liquor;

(C) separating as product said insoluble acetate salt from said aqueous mother liquor;

(D) thereafter concentrating said aqueous mother liquor to the extent sufficient to precipitate another crop of crude aroyl-1,4-di(lower alkyl)-pyrrole-2-acetate salt, which crop is insoluble in said concentrated mother liquor;

(E) converting said crop of crude aroyl-1-4-di(lower alkyl)-pyrrole-2-aceta e salt under conversion reaction conditions into the lower alkyl ester form of said aroyl-1,4-di(lower alkyl)-pyrrole-2-acetate; and

(F) recovering said esterified crop of aroyl-1,4-di(lower alkyl)-pyrrole-2-acetate and thereafter recycling said recovered acetate ester material to an aqueous medium for saponification in accordance with Step A.

4,299,771
PROCESS FOR PRODUCING ANTHRAQUINONE COMPOUNDS

Akira Takeshita, Toyonaka; Kaneo Yokoyama, Nara, and Makoto Hattori, Toyonaka, all of Japan, assignors to Sumitomo Chemical Company, Limited, Osaka, Japan

Filed Oct. 16, 1980, Ser. No. 197,625
Claims priority, application Japan, Oct. 26, 1979, 51-138894; Nov. 29, 1979, 54-155062
Int. Cl.^{3} C07C ***97/12***
U.S. Cl. 260—378 **15 Claims**

1. A process for producing 1,4-diamino-2,3-dicyanoanthraquinone, which comprises reacting 1,4-diaminoanthraquinone-2-sulfonic acid or a salt thereof, 1,4-diamino-2-cyanoanthraquinone, or 1,4-diaminoanthraquinone-2,3-disulfonic acid or a salt thereof with a cyanogenating agent in an aqueous medium, in the presence or absence of a dehydrogenating agent, with use of a quaternary ammonium compound.

4,299,772
XANTHENONE-YL ESTERS OF PHOSPHORIC AND PHOSPHONIC ACIDS

James T. Traxler, Evanston, Ill., assignor to Velsicol Chemical Corporation, Chicago, Ill.

Filed Mar. 4, 1980, Ser. No. 127,007
Int. Cl.^{3} C07D ***311/86***
U.S. Cl. 260—335 **11 Claims**

1. A compound of the formula

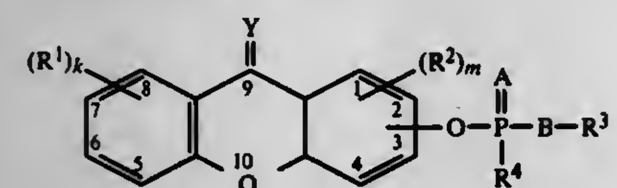

wherein R^1 and R^2 are each independently selected from the group consisting of halogen, alkyl, haloalkyl, nitro, alkylsulfinyl, alkylsulfonyl and cyano; k and m are integers from 0 to 3; Q is oxygen; Y is selected from the group consisting of oxygen and sulfur; R^3 is selected from the group consisting of alkyl and

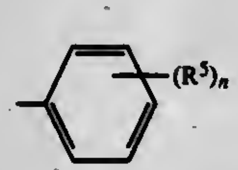

wherein R^5 is selected from the group consisting of halogen, alkyl, haloalkyl, nitro and cyano; n is an integer from 0 to 3; R^4 is selected from the group consisting of alkyl, alkoxy, alkylthio, amino, alkylamino, dialkylamino and

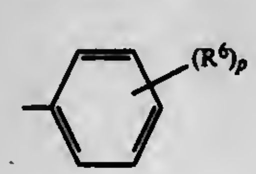

wherein R^6 is selected from the group consisting of halogen, alkyl, haloalkyl, nitro, and cyano; p is an integer from 0 to 3; and A and B are each independently selected from the group consisting of oxygen and sulfur, with the proviso that, if R^4 is alkoxy, then one of A and B must be sulfur.

4,299,773
ESTER DERIVATIVES OF POLYCARBOXYLIC ACIDS AND PROCESS FOR MAKING SAME

Eddie N. Gutierrez, Fort Lee, and Vincent Lamberti, Upper Saddle River, both of N.J., assignors to Lever Brothers Company, New York, N.Y.

Continuation of Ser. No. 905,621, May 15, 1978, Pat. No. 4,218,381, which is a division of Ser. No. 642,850, Dec. 22, 1975, Pat. No. 4,123,458. This application Nov. 5, 1979, Ser. No. 91,431
The portion of the term of this patent subsequent to May 10, 1994, has been disclaimed.
Int. Cl.^{3} C07D ***307/32;*** **C07C** ***51/09***
U.S. Cl. 260—343.6 **5 Claims**

1. A process for preparing a mixture of isocitric acid, alloisocitric acid and lactones of isocitric acid and alloisocitric acid comprising:

(a) halogenated with a compound of the formula

$$\frac{M_1}{x} O Q_1$$

wherein M$_1$ is hydrogen or a lithium, sodium, potassium, magnesium, calcium, strontium or barium cation, x is either 1 or 2 and corresponds to the valency of M$_1$ and wherein Q$_1$ is chlorine or bromine in an aqueous medium at a pH of less than about 8, a compound of the general formula

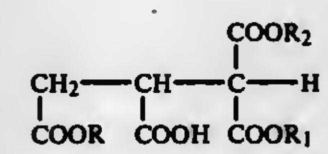

wherein R and R$_2$ are independently primary alkyl groups of 1 to 4 carbon atoms and R$_1$ is a primary alkyl group of 1 to 4 carbon atoms, a lithium, a sodium, or potassium cation; to produce a halogenated compound of the general formula

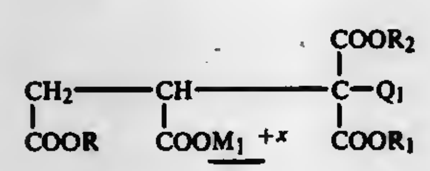

wherein said R, said R$_1$, said R$_2$, said M$_1$, said x and said Q$_1$ are as previously defined, and

(b) heating said halogenated compound in an aqueous medium at a pH of less than about 2 to produce said mixture of isocitric acid, alloisocitric acid and lactones of isocitric acid and alloisocitric acid.

4,299,774
25-ALKYLCHOLEST-5-ENE-3 β,22-DIOLS AND ESTERS THEREOF

Robert J. Chorvat, Arlington Heights, Ill., assignor to G. D. Searle & Co., Chicago, Ill.

Continuation of Ser. No. 929,068, Jul. 28, 1978, which is a continuation-in-part of Ser. No. 828,385, Aug. 29, 1977, abandoned. This application Apr. 30, 1980, Ser. No. 145,110
The portion of the term of this patent subsequent to May 27, 1997, has been disclaimed.
Int. Cl.^{3} C07J ***9/00***
U.S. Cl. 260—397.2 **2 Claims**

1. A compound of the formula

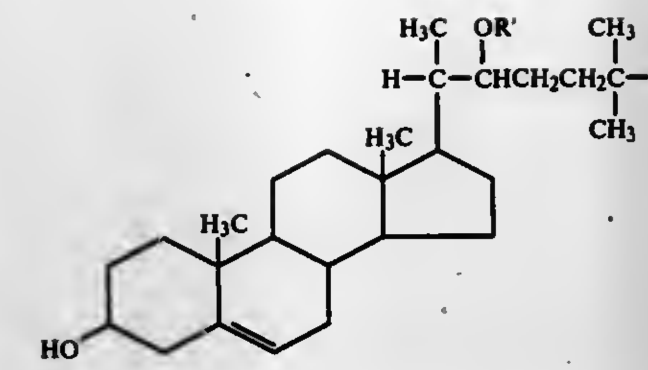

wherein R represents alkyl containing fewer than 5 carbons; and R' represents hydrogen, acetyl, or a radical of the formula:

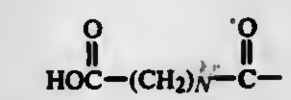

wherein N represents a positive integer less than 4.

4,299,775
PROCESS FOR THE PREPARATION OF 3-CYANO-3,5,5-TRIMETHYLCYCLOHEXANONE

Bernard Dubreux, Francheville Le Bas, France, assignor to PCUK Produits Chimiques Ugine Kuhlmann, Courbevoie, France

Filed Sep. 10, 1980, Ser. No. 185,989
Claims priority, application France, Oct. 26, 1979, 79 26596
Int. Cl.^{3} C07C ***120/02***
U.S. Cl. 260—464 **5 Claims**

1. A process for the preparation of 3-cyano-3,5,5-trimethylcyclohexanone which comprises reacting isophorone alone or dissolved in a water immiscible organic solvent with a sodium or potassium cyanide dissolved in water in the presence of an onium phase transfer agent, at an alkaline pH, a temperature between about 0° and 100° C., and in which the isophorone-cyanide molar ratio is between about 0.01 and 10, and the transfer agent isophorone molar ratio is between about 0.00001 and 0.1.

4,299,776
PREPARATION OF ESTERS

Charles E. Hatch, III, Pennington, N.J., assignor to FMC Corporation, Philadelphia, Pa.

Continuation-in-part of Ser. No. 102,727, Dec. 13, 1979, abandoned. This application Jun. 24, 1980, Ser. No. 162,479
Int. Cl.^{3} C07C ***120/00, 121/75***
U.S. Cl. 260—465 D **6 Claims**

1. A process for preparing an insecticidal α-cyano-3-phenoxybenzyl ester of the formula

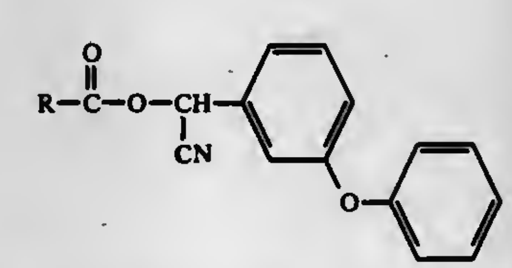

wherein R is selected from the group consisting of 3-(2,2-dichloroethenyl)-2,2-dimethylcyclopropyl, 3-(2,2-dibromoethenyl)-2,2-dimethylcyclopropyl, 3-(2-chloro-3,3,3-trifluoropropenyl)-2,2-dimethylcyclopropyl, and 1-(4-chlorophenyl)-2-methylpropyl which comprises reacting an acyl halide of the formula

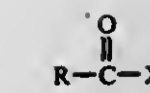

wherein X is chlorine or bromine and R is as defined above with b 3-phenoxybenzaldehyde and dissolved water-soluble cyanide salt in a mixture of substantially water-miscible aprotic solvent and water in a ratio of about 0.25–6.

4,299,777
PREPARATION OF CYANO ACETALS

Philip E. Garrou, Holliston; Robert A. Dubois, Franklin, and Bart J. Bremmer, Ashland, all of Mass., assignors to The Dow Chemical Company, Midland, Mich.

Filed Jun. 13, 1980, Ser. No. 159,038
Int. Cl.^{3} C07C ***120/00, 121/46, 121/16***
U.S. Cl. 260—465.6 **7 Claims**

1. In a process for the preparation of a 3-cyano acetal by reacting a reaction mixture containing a nitrile represented by the formula $CH_2{=}CR'{-}C{\equiv}N$ where R' is hydrogen or $C_{1\text{-}4}$ alkyl; a saturated primary or secondary hydroxy-containing compound selected from the group consisting of $C_{1\text{-}6}$ alkanols and cyclohexanol; carbon monoxide; and hydrogen in the presence of $Co_2(CO)_8$ catalyst at a pressure of at least 60 atmospheres and a temperature from about 75° C. to about 200° C., the improvement comprising adding to the reaction mixture an effective amount to increase selectivity of 3-cyano acetal formation of a catalyst promoter of the formula HNR_mX_n where R is hydrogen or a $C_{1\text{-}4}$ radical selected from alkyl and aminoalkyl; X is $(CH_2)_yCN$ or $(CH_2)_yCOOH$ wherein y is an integer from 1 to 3; and m and n are integers from 0 to 2, provided that n is at least 1, and $m+n=2$.

4,299,778
N-CYCLOPROPYL-N-(FLUOROPHENYL)-N-HYDROXYUREAS

Kurt H. Pilgram, Modesto, Calif., assignor to Shell Oil Company, Houston, Tex.

Filed Jul. 21, 1980, Ser. No. 170,419
Int. Cl.^{3} C07C ***83/10;*** **A61K** ***31/185***
U.S. Cl. 260—500.5 H **2 Claims**

1. N'-cyclopropyl-N-(2-fluorophenyl)-N-hydroxyurea.
2. N'-cyclopropyl-N-(2,5-difluorophenyl)-N-hydroxyurea.

4,299,779
CATALYTIC REDUCTION OF 2-NITRONAPHTHALENE-4,8-DISULFONIC ACID AMMONIUM SALT

John D. Hildreth, Macclesfield, England, assignor to Clayton Aniline Co., Ltd., England

Filed Dec. 15, 1980, Ser. No. 216,491
Claims priority, application United Kingdom, Feb. 16, 1980, 05312/80
Int. Cl.^{3} C07C ***143/60***
U.S. Cl. 260—508 **8 Claims**

1. A process for the manufacture of 2-naphthylamine-4,8-disulphonic acid which comprises catalytically hydrogenating the ammonium salt of 2-nitronaphthalene-4,8-disulphonic acid at superatmospheric pressure and a temperature of 60° to 150° C. in aqueous medium at a pH in the range 4.0–7.5, in the presence of a platinum/carbon or palladium/carbon catalyst.

4,299,780
PROCESS FOR PREPARING SALTS OF CARBAMOYL SULFONIC ACID DERIVATIVES
Young-Jin Lee, South Charleston, W. Va., assignor to Union Carbide Corporation, New York, N.Y.
Filed Mar. 25, 1980, Ser. No. 133,790
Int. Cl.[3] C07C *143/02, 143/52;* A01N *47/10*
U.S. Cl. 260—513 N 6 Claims

1. A process for preparing a compound of the formula:

$R\text{-}NHCOSO_3^-M^+$

which comprises reacting a compound of the formula:

$M^+HSO_3^-$

with a compound of the formula

R-NHCOX

wherein
R is a C_1 to C_8 alkyl or phenyl group,
M^{30} is an alkali metal or ammonium ion, and
X is halogen,
said reaction being effected at a temperature between about 0° C. and about 50° C. and at a pressure of autogenous or atmospheric pressure.

6. A compound of the formula :

$CH_3\text{-}NHCOSO_3^-M^+$

wherein M is alkali metal or ammonium.

4,299,781
ORGANOMAGNESIUM SOLUTIONS OF LOW VISCOSITY
Loyd W. Fannin, Dickinson; Dennis B. Malpass, LaPorte, both of Tex., and Ramiro Sanchez, Vestal, N.Y., assignors to Texas Alkyls, Inc., Deer Park, Tex.
Filed May 12, 1980, Ser. No. 148,650
Int. Cl.[3] C07F *3/02*
U.S. Cl. 260—665 R 23 Claims

1. A low viscosity liquid solution comprising
(a) a hydrocarbon-soluble dialkylmagnesium compound of 4 to 20 carbon atoms per molecule at a concentration of from about 0.2% to about 50% by weight,
(b) a solvent selected from the group consisting of aliphatic, alicyclic, and aromatic hydrocarbons of 5 to 20 carbon atoms, and
(c) an organometallic additive selected from the group consisting of R_3Ga, R_3In, and RLi, in which R is C_1–C_{12} alkyl or C_5–C_7 cycloalkyl, at a mole ratio of from about 0.001:1 to about 0.25:1 with respect to the dialkylmagnesium compound.

4,299,782
PHOSPHORUS DERIVATIVES OF 1,3-DIETHANOLUREA
Mabel M. M. Chen, Broomall, and Stanley R. Sandler, Springfield, both of Pa., assignors to Pennwalt Corporation, Philadelphia, Pa.
Filed Mar. 24, 1980, Ser. No. 133,297
Int. Cl.[3] C07F *9/40;* C08G *18/28*
U.S. Cl. 260—932 1 Claim

1. A compound useful as a flame retardant for polyurethane resins, comprising:
A compound having a formula selected from the group consisting of

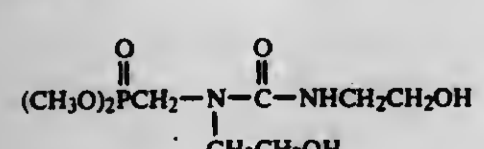

-continued

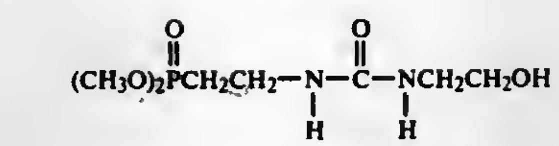

and

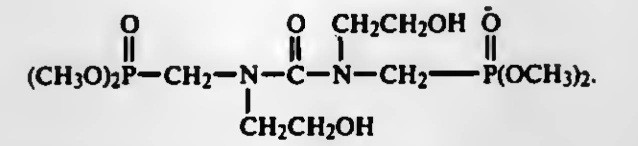

4,299,783
1-ALKYLSULFONYL-3-SUBSTITUTED PHOSPHINYLTHIO- OR PHOSPHINOTHIOYLTHIO-PROPENES
Philip S. Magee, Vallejo, Calif., assignor to Chevron Research Company, San Francisco, Calif.
Filed Apr. 28, 1980, Ser. No. 143,984
Int. Cl.[3] C07F *9/165;* A01N *37/12*
U.S. Cl. 260—948 4 Claims

1. A compound of the formula:

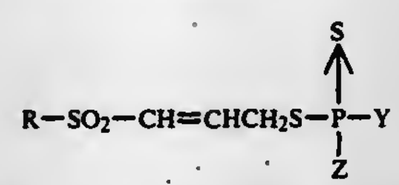

wherein R is alkyl of 1 to 6 carbon atoms, cycloalkyl of 5 to 10 carbon atoms, alkenyl of 2 to 6 carbon atoms, alkynyl of 2 to 6 carbon atoms, all of said R groups being optionally substituted with from 1 to 13 halogen atoms;
Y is $—OR^1$ or $—SR^1$ wherein R^1 is selected from the same groups which define R above;
Z is $—OR^2$ or $—SR^2$
wherein R^2 is selected from the same groups which define R above.

4,299,784
APPARATUS FOR PRODUCING AN AEROSOL
Günter Hense, Slegfriedstrasse 96, D-4930 Detmold, Fed. Rep. of Germany
Filed Apr. 2, 1980, Ser. No. 136,418
Claims priority, application Fed. Rep. of Germany, Oct. 6, 1978, 2843756
Int. Cl.[3] B05B *15/00*
U.S. Cl. 261—78 A 12 Claims

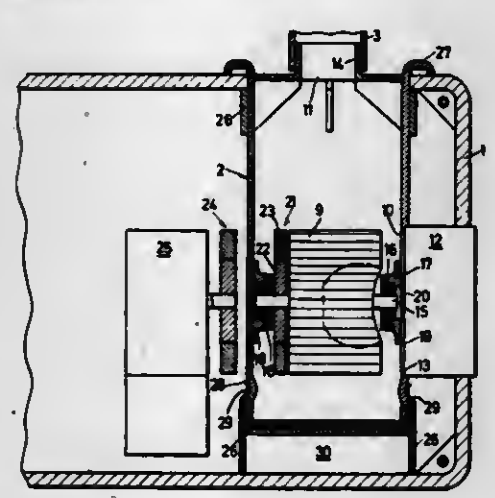

1. In an apparatus for producing an aerosol and which has an atomizing chamber for receiving material to be atomized and a flowing stream of air and delivering an aerosol produced, the apparatus further having air supply means for delivering a flowing stream of air to the atomizing chamber and including fan wheel means for impelling the flowing stream of air, drive means for driving the fan wheel means, and filter means for removing bacteria from air flowing through the fan wheel means, an improvement which facilitates sterilization of the apparatus and comprising replaceable cassette means for containing said fan wheel means and for defining an air flow passageway, housing means for receiving said cassette means and for containing said drive means, and magnetic coupling means operable through a closed wall of said cassette means for coupling said drive means to said fan wheel means, whereby said cassette means may be readily removed from said housing means for sterilization of said cassette means.

12. A method of operating an apparatus for producing an aerosol and which has an atomizing chamber for receiving material to be atomized and a flowing stream of air and delivering an aerosol produced, a cassette containing a fan wheel for delivering the flowing stream of air through the atomizing chamber, a housing for receiving the cassette and for containing a drive for driving the fan, and a magnetic coupling operable through a closed wall of the cassette for coupling the drive to the fan wheel, the method comprising the steps of inserting into the housing before commencement of production of an aerosol a cassette sterilized in an autoclave at 134° C. in a humid atmosphere or at 180° C. in a dry atmosphere and, after an operating period of four to eight hours, replacing the cassette by another cassette sterilized in the same way.

4,299,785
INDUCED DRAFT COOLING TOWER WITH IMPROVED OUTER SUPPORT STRUCTURE
Bernard Fougea, Neuilly-sur-Seine, France, assignor to Coignet S.A., Paris, France
Filed Jun. 20, 1980, Ser. No. 161,356
Claims priority, application France, Jun. 20, 1979, 79 15763
Int. Cl.[3] B01F *3/04*
U.S. Cl. 261—111 20 Claims

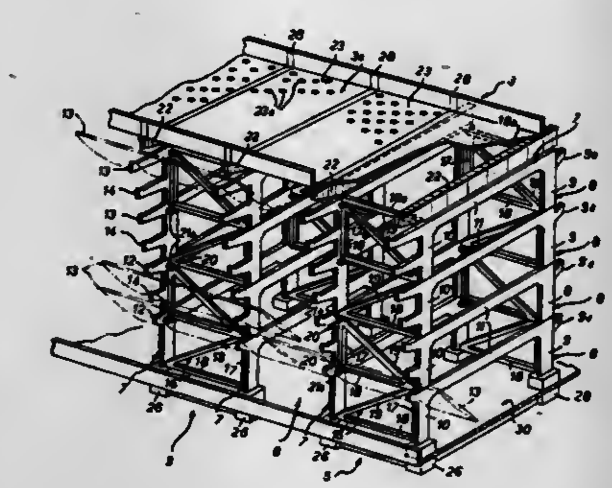

1. An induced draft cooling tower of the type comprising an annular outer support structure for supporting a similarly shaped dispersion section including a raised, hot water supply basin and an inner support structure concentric with the outer support structure for supporting a ventilation section, said outer support structure being essentially constructed of precast reinforced concrete elements and comprising a plurality of sector-shaped independent self-supporting and self-stabilized towers in an annular array, said towers having a pair of circumferentially spaced radial sides, each of said radial sides comprising a plurality of superposed portal frames, and triangular bracing members extending circumferentially between said pairs of radial sides of said towers.

4,299,786
WASTE HEAT DISPOSAL PROCESS
William G. Sanderson; Richard B. Sumner, and Loren G. Kragh, all of Tacoma, Wash., assignors to Tower Systems Inc., Tacoma, Wash.
Filed Oct. 28, 1980, Ser. No. 201,550
Int. Cl.[3] B01F *3/04*
U.S. Cl. 261—128 11 Claims

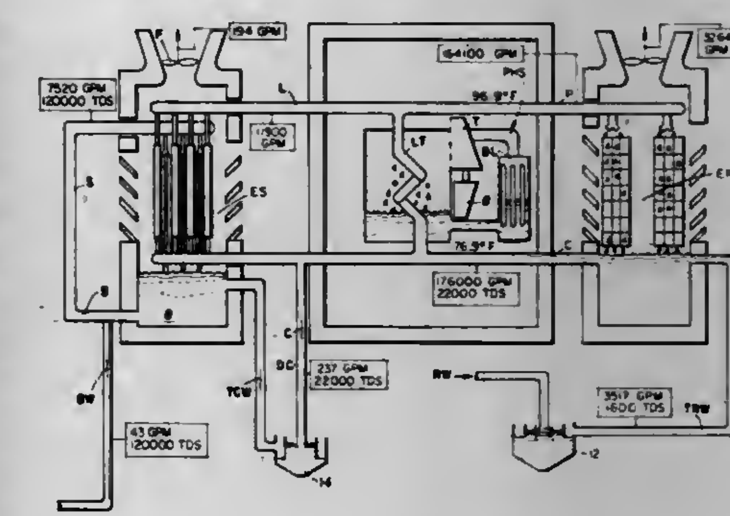

1. The improved process for removing waste heat which comprises: connecting a first open-looped evaporative cooling circuit with a known maximum dissolved solids concentrating capacity in heat-exchange relation with a primary heat source, providing a second open-looped evaporative cooling circuit with a several-fold greater dissolved solids level concentrating capacity than the first, continuously supplying makeup liquid to the coolant circulating within the first open-looped circuit, said makeup liquid having a total dissolved solids concentration several times lower than the solids concentrating capacity of said first circuit, tapping off a portion of the hot coolant circulating within the first open-looped circuit on the downstream side of the primary heat source for use as a secondary heat source for the second open-looped circuit, blowing down a portion of the coolant circulating in the first open-looped circuit and using same as the makeup liquid to the coolant circulating within the second open-looped circuit, passing the secondary heat source in heat-exchange relation to the coolant circulating within the second open-looped circuit before passing same thus cooled in heat-exchange relation to the primary heat source, and continuously removing that quantity of coolant from the second open-looped circuit as is required to maintain the dissolved solids concentration therein at a level less than the maximum it can tolerate.

4,299,787
MELT SPINNING POLYIMIDE FIBERS
John Gagliani, San Diego, Calif., assignor to International Harvester Company, Chicago, Ill.
Filed Oct. 19, 1978, Ser. No. 952,738
Int. Cl.[3] B29D *27/00*
U.S. Cl. 264—41 4 Claims

1. A method of producing a polyimide fiber having an expanded microcellular structure, said method comprising the steps of: melting and foaming a fusible copolyimide precursor comprising at least one diester of a benzophenonetetracarboxylic acid and at least two diamines; the ester or esters and the diamines being present in an amount such that the imide forming functionalities are substantially equimolar, one of said diamines being heterocyclic and having nitrogen in the ring, another of said diamines being a para- or meta-substituted aromatic diamine which is free of aliphatic moieties, any additional diamine being either a heterocyclic or an aromatic diamine as aforesaid, and the melting and foaming of the precursor being effected by heating it to a temperature in the range of 100°-200° C.; then forming fibers from the molten material

thus obtained; and heating said fibers to a temperature in the range of 280°-315° C. to complete the condensation polymeri-

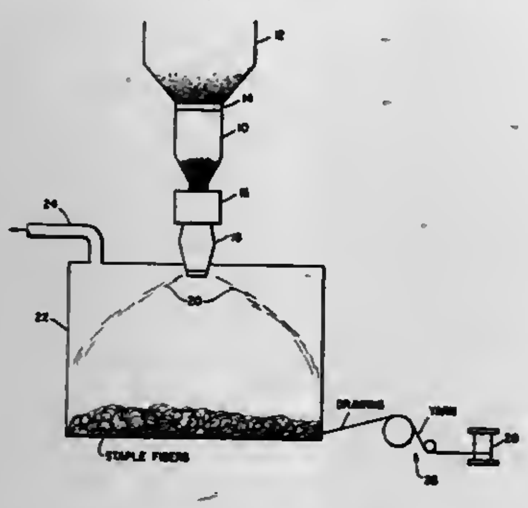

zation reactions and thereby develop a polymer characterized by an aromatic copolyimide structure.

4,299,788

PROCESS FOR MANUFACTURING STRANDED COPPER WIRE

John A. Ross, Wallingford, Pa., assignor to E. I. Du Pont de Nemours and Company, Wilmington, Del.

Filed May 14, 1980, Ser. No. 149,659

Int. Cl.³ B29F *3/10*

U.S. Cl. 264—85 **2 Claims**

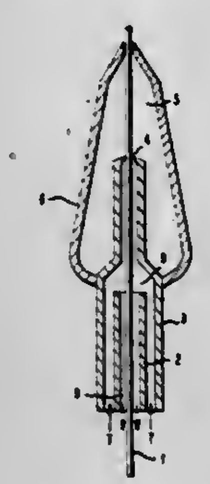

1. In the process for coating non-melt-fabricable tetrafluoroethylene polymer onto stranded copper wire by extruding the tetrafluoroethylene polymer around the stranded copper wire as the wire travels lengthwise through the die of a wire-coating extruder, the improvement which comprises employing a nonoxidizing atmosphere along the copper wire prior to applying the polymer to the wire, and causing said atmosphere to flow along the surface of the copper wire in a direction counter to the direction of travel of said wire.

4,299,789

ROLLER DIE EXTRUDER AND METHOD OF USE

George G. Giesbrecht, Kitchener, Canada, assignor to Uniroyal Ltd., Ontario, Canada

Continuation of Ser. No. 899,910, Apr. 26, 1978, abandoned. This application Dec. 5, 1979, Ser. No. 100,575

Int. Cl.³ B29D *7/12*

U.S. Cl. 264—176 R **5 Claims**

3. In an extrusion apparatus of the type having;

(a) a generally cylindrical roller;

(b) a stationary die head having a surface confronting said roller over a portion of the arcuate surface thereof to define a chamber between said die head and said roller;

(c) means for supplying an extrudate in a fluid condition to said chamber; and

(d) means for rotating said roller about its axis to force said extrudate in a downstream direction through said chamber so that at least the extrudate in a downstream portion of said chamber is under pressure, a downstream portion of said confronting surface of said die head cooperating with said surface of said roller to define an extrudate shaping orifice at the downstream end of said chamber, the improvement comprising:

(e) at least two bearing pads interposed between said roller and said die head and affixed to said die head, said pads being spaced axially from one another,

(f) a frame included in said apparatus and

(g) a bearing block slidably mounted to said frame,

(h) said die head including a base element mounted to said frame, an upstream element releasably mounted to said base element and a downstream element releasably mounted to said upstream element, an upstream portion of said chamber being defined by a surface of said upstream element confronting said roller and said extrudate shaping orifice being defined by a surface of said downstream element confronting said roller, said roller being rotatably mounted to said bearing block,

(i) two upstream bearing pads affixed to said upstream element and two downstream bearing pads affixed to said downstream element so that said upstream and downstream bearing pads constitute two sets of bearing pads

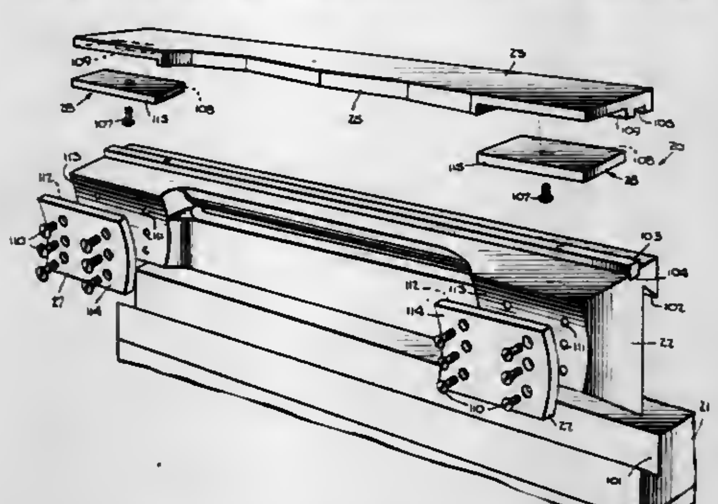

spaced axially from each other and lying axially outboard of said chamber on both sides thereof, said downstream bearing pads defining the axially spaced lateral boundaries of said extrudate shaping orifice, and

(j) means for biasing said roller against said bearing pads including means for biasing said bearing block towards said die head with a force at least equal to the force exerted on said roller by the pressurized extrudate in said chamber so that said roller will bear on said die head through said bearing pads during its rotation and said pads will space said roller from said die head whereby said bearing pads will be maintained in sliding contact with a surface of said roller, the materials of said bearing pads and of the last-mentioned surface being selected so that said bearing pads and said last-mentioned surface differ from one another in hardness and form a bearing operable without galling at the die head temperature to be employed in operation of the apparatus.

4. In a method of extruding a strip of extrudate including the steps of;

(a) feeding the extrudate in a fluid condition into a chamber defined by the arcuate surface of a generally cylindrical roller and a confronting surface of a die head, and

(b) rotating the roller about its axis to carry the extrudate in a downstream direction through the camber, pressurize the extrudate in a downstream portion of the chamber and force the extrudate through an extrudate shaping orifice defined by the roller and a portion of the confronting

surface of the die head at the downstream end of the chamber, the improvement comprising:

(c) during rotation of the roller, biasing the roller, with a force at least equal to the force exerted on the roller by the pressurized extrudate in the chamber, against two bearing pads which are interposed between the roller and the die head axially spaced from one another defining axially spaced lateral boundaries of at least a selected portion of the chamber and which are affixed to said die head or said roller, so that the roller bears on the die head through the pads and the pads serve to space the roller from the die head, whereby the pads will be in sliding contact with a surface of said roller or of said die head, the materials of the pads and of the last-mentioned surface being selected so that the pads and said last-mentioned surface differ from one another in hardness and form a bearing operable without galling at the die head temperature employed, furhter comprising the step of

(d) axially confining the extrudate in said selected portion of the chamber by means of the bearing pads.

4,299,790

METHOD AND COMPOSITION FOR FORMING A PLASTER OBJECT

Allen A. Greenberg, 3531 N. 47 Ave., Hollywood, Fla. 33021

Filed Dec. 18, 1979, Ser. No. 104,782

Int. Cl.³ C04B *11/22*

U.S. Cl. 264—299 **7 Claims**

1. A method of forming a molded plaster object which comprises mixing together approximately 100 parts by weight of water and 60-90 parts by weight of a molding powder by weight, said molding powder comprising calcium sulphate hemihydrate and finely divided xanthan gum in quantities of from 0.25%-1.5% by weight of the molding powder thereof placing the mixture in a mold, allowing the mixture to solidify in said mold, removing the solidified, shaped mixture from the mold, and allowing same to dry to form a porous, low-density plaster object.

4,299,791

METHOD FOR THE PREVENTION OF DROOLING FROM A PLASTIC INJECTION MOLDING MOLD AND INJECTION NOZZLES

Katashi Aoki, 6037, Ohaza Minamijo, Sakaki-machi, Hanishina-gun, Nagano-ken, Japan

Filed Jul. 18, 1979, Ser. No. 58,488

Int. Cl.³ B29F *1/03*

U.S. Cl. 264—328.9 **3 Claims**

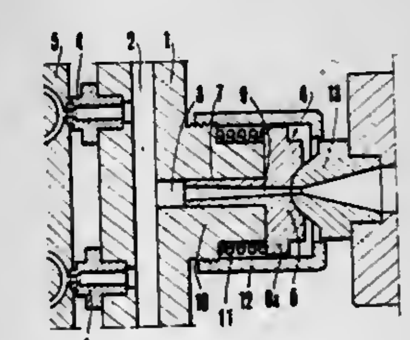

1. A method for the prevention of drooling from a plastic injection molding mold in which a nozzle is arranged to impose a touching force on a nozzle receiver on said mold during injection of plastic, and said nozzle is arranged to remove said touching force after injection of said plastic; said method comprising:

providing a space having a variable volume within said mold adjacent said nozzle receiver;

decreasing the volume of said space in response to the imposition of said touching force; and

increasing the volume of said space in response to the removal of said touching force;

said method further characterized in that a plunger of a nozzle touch member provided with a flow passage is slidably inserted into a sprue connected to the hot runner in the injection molding mold, said plunger being always biased outwardly by means of the return spring so that the plunger may be moved inwardly by means of an external force, and after said plunger has been moved inwardly by the nozzle touch for injection molding, the plunger is automatically returned to its original position as the touch force decreases due to the separation of the nozzle to increase the volume of sprue so that the residual pressure of the sprue and hot runner is reduced to the extent that no drooling is introduced.

4,299,792

INJECTION MOLDING PROCESS UTILIZING LOW SHEAR SCREW

Robert E. Nunn, Marion, Ohio, assignor to HPM Corporation, Mount Gilead, Ohio

Division of Ser. No. 41,801, May 23, 1979, abandoned. This application May 22, 1980, Ser. No. 152,170

Int. Cl.³ B29F *1/02, 1/12*

U.S. Cl. 264—328.18 **5 Claims**

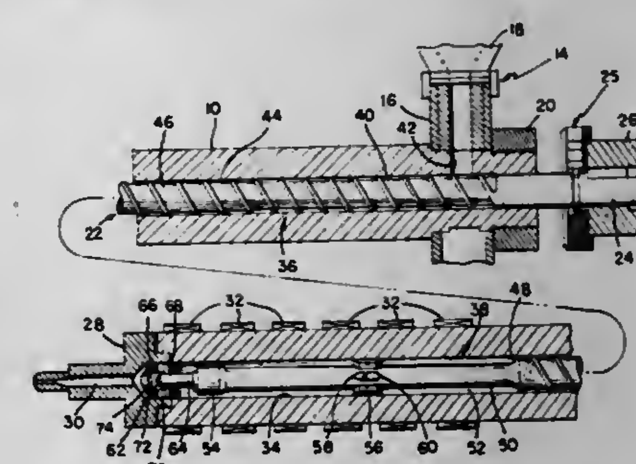

1. A method for injection molding articles of fiber reinforced plastics material comprising:

providing a barrel having a discharge opening at the forward end thereof and an inner wall,

providing a screw in the barrel comprising a rear flighted portion and a forward unflighted portion adjacent the flighted portion,

feeding glass reinforced plastics material into the barrel into the flighted portion of the screw,

rotating the screw to displace the materials forwardly into an annular passage defined between the barrel and the unflighted portion of the screw,

flowing the material through the annular passage and forwardly of the screw with a gentle wiping action and with a minimal amount of shear so that breakage of the fibers in the material is minimized, and

translating the screw forwardly to displace the material in front of the screw through the discharge opening.

4,299,793

METHOD AND APPARATUS FOR PRODUCING TUBULAR PLASTIC FILMS

Kohtaro Hayashi, Chibaken; Ko Morihara, Chibashi, and Kohji Nakamura, Chibaken, all of Japan, assignors to Chisso Engineering Co., Ltd., Tokyo, Japan

Filed Dec. 19, 1979, Ser. No. 105,270

Claims priority, application Japan, Dec. 25, 1978, 53/159458

Int. Cl.³ B29D *23/04;* B29F *3/00*

U.S. Cl. 264—564 **3 Claims**

1. In an apparatus for producing tubular plastic film in which molten plastic is extruded through an extrusion device in the form of a tube and the extruded tube thereafter expanded by the introduction of air under pressure into the interior of the

extruded tube by means of an air inlet and an air supply system, the improvement comprising an air supply system that includes:

(a) an air blower,
(b) an air reservoir for receiving air discharged from said air blower,
(c) a first conduit extending between said air blower and said air reservoir for transporting the air between said air blower and said air reservoir,
(d) a valve in said first conduit for controlling the amount of air flowing between said air blower and said air reservoir,
(e) a valved air outlet from said air reservoir for venting at least some of the air introduced into the air reservoir by said air blower,
(f) a second conduit separate from said valved air outlet that extends between said air reservoir and the air inlet that introduces air into the extruded plastic tube, said second conduit being unobstructed by valve means,

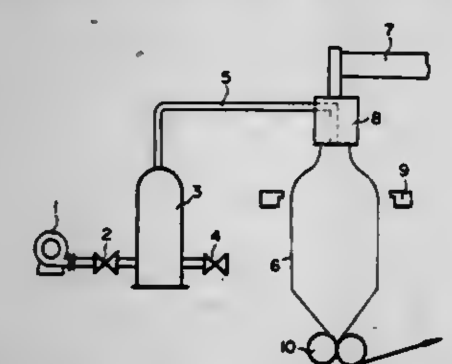

whereby said air blower and said valved air outlet cooperate to establish an essentially static pressure condition in said air reservoir and said second conduit serves to insure that the air pressure in the reservoir and the air pressure in the interior of the extruded plastic tube are essentially the same.

3. In the known method of producing tubular plastic film by extruding molten plastic into the form of a tube and thereafter expanding the extruded tube by introducing air under pressure into the interior of said tube, the improvement comprising

(a) establishing an air reservoir having an essentially static pressure condition by blowing air into a zone and simultaneously removing air from that zone at a lesser rate that it is blown in, and
(b) establishing a direct unobstructed passageway between said reservoir and the interior of said extruded plastic tube so that the air pressure in the interior of said extruded plastic tube will be maintained at essentially the same pressure as the pressure in said reservoir,

whereby a tubular plastic film having extremely small variations in flat width are produced.

4,299,794
ANALYTICAL SYSTEM FOR ANALYZING CO_2 CONTENT OF A FLUID
Thomas F. Kelley, Canton; Dinesh I. Mody, Bedford, and Charles F. Mountain, Cambridge, all of Mass., assignors to Instrumentation Laboratory Inc., Lexington, Mass.
Filed Jun. 20, 1980, Ser. No. 161,375
Int. Cl.³ G01N *33/50, 1/10, 7/14*
U.S. Cl. 422—68 **15 Claims**

1. A system for analyzing carbon dioxide content of a fluid comprising
structure defining an inlet port,
a reaction chamber,
means to change the volume of said reaction chamber,
a transducer for sensing a parameter of carbon dioxide in said reaction chamber,
a flow control coupled between said chamber and said inlet port,
said flow control having
a first state in which said inlet port is connected to said reaction chamber, and
a second state in which said reaction chamber is sealed,
a chamber volume control for changing the volume of said reaction chamber, and
a system controller for coordinately operating said flow control and said chamber volume control,
said system controller having
(1) a loading mode in which said flow control is operated to connect said reaction chamber to said inlet port and said volume control is then operated to increase the volume of said reaction chamber to draw sample and reagent through said inlet port structure into said chamber,

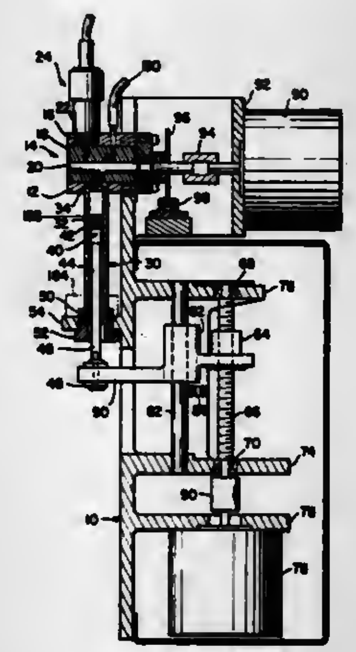

(2) a degassing mode in which said flow control is operated to seal said reaction chamber and said volume control is then operated to further increase the volume of said reactin chamber after said flow control has sealed said reaction chamber to reduce the pressure in said chamber and facilitate release of carbon dioxide from said sample as a result of interaction of said reagent and said sample, and
(3) a measuring mode in which said volume control is operated to decrease the volume of said reaction chamber to a predetermined value (of pressure or volume) and a parameter of the released carbon dioxide in said chamber is then measured by said transducer.

4,299,795
SAMPLE TUBE
William T. D. Bates, 16 Middlemarch, Daventry, Northamptonshire, England
Filed Jul. 24, 1980, Ser. No. 171,951
Int. Cl.³ B01L *3/02;* **G01N** *1/10.*
U.S. Cl. 73—864.01 **5 Claims**

1. A sample tube having a transparent, substantially rigid body portion to enable viewing of a test conducted in said tube, said body portion having a first end which serves as an inlet for sample liquid and a second end to which suction can be applied to draw liquid into said first end, the tube being formed with a local restriction in internal diameter a predetermined distance from the inlet end of the tube, and a movable valve member disposed in the tube between said restriction and said opposite end of the tube for co-operating with the restriction, said valve member and said restriction being constructed and arranged that when said valve member is seated on the restriction an imperfect seal is formed between said valve member and said restriction, the space defined by said imperfect seal between said restriction and the valve member seated thereon being of a size to allow liquid, after being drawn into the tube to substantially above said restriction, to drain through said imperfect seal until the liquid level reaches the level of said valve member and said restriction and then retain the level of the liquid at said level by surface tension effects interacting with said space of said imperfect seal.

4,299,796
APPARATUS FOR PERFORMING TESTS AND MEASUREMENTS ON LIQUID SAMPLES
Johannes H. L. Hogen Esch, Aalten, Netherlands, assignor to Vitatron Scientific B.V., Netherlands
Continuation of Ser. No. 895,389, Apr. 11, 1978, Pat. No. 4,224,278. This application Mar. 27, 1980, Ser. No. 134,295
The portion of the term of this patent subsequent to Sep. 23, 1997, has been disclaimed.
Int. Cl.³ G01N *1/14, 35/00*
U.S. Cl. 422—63 **17 Claims**

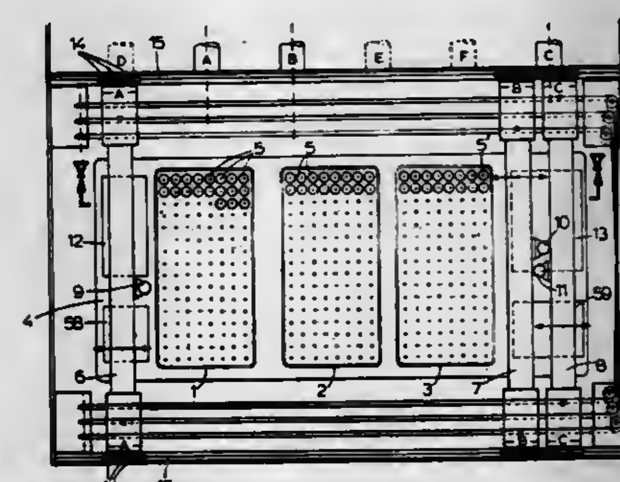

1. Apparatus for performing tests and measurements on various liquid samples, in particular sera, comprising a plurality of receptacles for the samples to be examined, said receptacles serving as storage and processing vessels for said samples, and further comprising a plurality of stations arranged above said receptacles and means for displacing said stations with respect to said receptacles in all directions in a horizontal plane, said stations serving for transferring said samples from a first receptacle to at least one second receptacle, for adding reagents, and for discharging reaction products from said at least one second receptacle.

4,299,797
CARBON BLACK PRODUCTION
Paul J. Cheng, Bartlesville, Okla., assignor to Phillips Petroleum Company, Bartlesville, Okla.
Division of Ser. No. 834,200, Sep. 19, 1977, Pat. No. 4,225,570. This application Jul. 21, 1980, Ser. No. 170,423
Int. Cl.³ C01B *31/02;* **C09L** *1/48*
U.S. Cl. 422—112 **5 Claims**

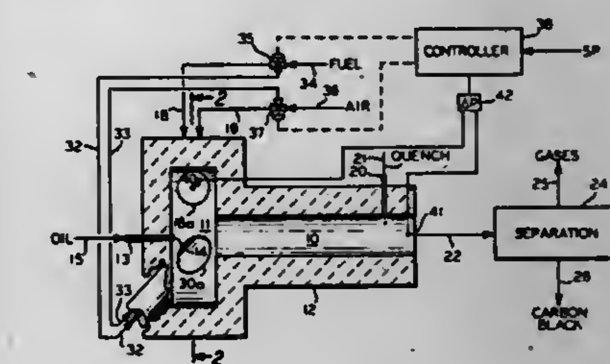

1. A carbon black reactor comprising:
a reaction section of generally circular transverse cross section;
a combustion section positioned upstream of said reaction section and communicating therewith, said combustion section being of generally circular transverse cross section and longitudinally coaxial with said reaction section;
means operable to introduce a feed material into said combustion section generally along the longitudinal axis thereof;
at least one first conduit means communicating with said combustion section operable to introduce combustion gases thereinto, each said first conduit means being located so as to introduce the combustion gases in a direction generally tangential to the side wall of the combustion section in a plane generally perpendicular to the longitudinal axis of the combustion section; and
at least one second conduit means communicating with said combustion section operable to introduce combustion gases thereinto, each said second conduit means being located so as to introduce the combustion gases in a direction generally tangential to the side wall of the combustion section in a plane which is at an angle of about 30° to 60° with respect to the longitudinal axis of the combustion section, said second conduit means opening in a direction toward the reaction section of the reactor.

4,299,798
APPARATUS FOR THE TREATMENT OF SOLIDS BY LIQUIDS
Pierre Faugeras, Pont Saint-Esprit; Pierre Fremeaux, Meyzieu; Edouard Henry, Pont Saint-Esprit; Roger Malaterre, Bourg Saint-Andeol, and Pierre Ros, Sauveterre, all of France, assignors to Commissariat a l'Energie Atomique, Paris, France
Filed Jan. 16, 1980, Ser. No. 112,389
Claims priority, application France, Dec. 19, 1978, 78 36388
Int. Cl.³ B01D *11/02*
U.S. Cl. 422—281 **4 Claims**

1. In an apparatus for the continuous treatment of divided solids by a liquid, of the kind comprising:
a column through which said divided solids and said liquid circulate in counter-current under the effect of their different densities, said column having a first end and a second end and being formed with a first space at said first end and with a second space at said second end,
means to introduce said liquid into said first space;
means to introduce said divided solids into said second space;
means to discharge said liquid from said second space;
a coveying conduit through which the treated solids which collect in said first space are hydraulically conveyed by the liquid introduced into said first space;
and means to receive the hydraulically conveyed solids, to

separate the liquid therefrom and to recycle the separated liquid; the improvement according to which:

said means to introduce said liquid into said first space comprise:

a first nozzle disposed within said first space and directed towards said second end of said column;

means to force through said nozzle a first fraction of said liquid to cause said first fraction to circulate through said column;

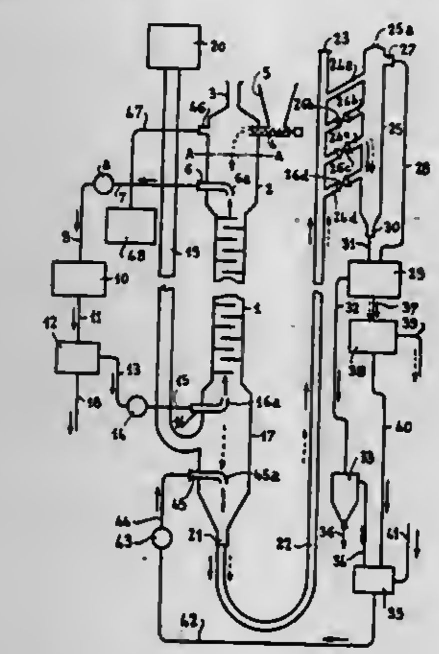

a second nozzle disposed within said first space between said first nozzle and said first end of said column;

and means to force through said second nozzle a second fraction of said liquid to cause said second fraction to entrain said treated solids through said conveying conduit;

said conveying conduit opening in said first space beyond said second nozzle with respect to said first nozzle.

4,299,799
CARBON TREATMENT OF MONOHYDRATE CRYSTALLIZER LIQUOR

Joseph M. Ilardi, South Brunswick, N.J.; Richard W. Waggener, Green River, Wyo., and William R. Frint, Berwin, Pa., assignors to Intermountain Research & Develop. Corp., Green River, Wyo.

Continuation of Ser. No. 858,929, Dec. 9, 1977, abandoned, which is a continuation of Ser. No. 751,788, Dec. 16, 1976, abandoned. This application Apr. 9, 1980, Ser. No. 138,484
Int. Cl.^{3} C01D *7/00*; C22B *26/10*

U.S. Cl. 423—206 T **7 Claims**

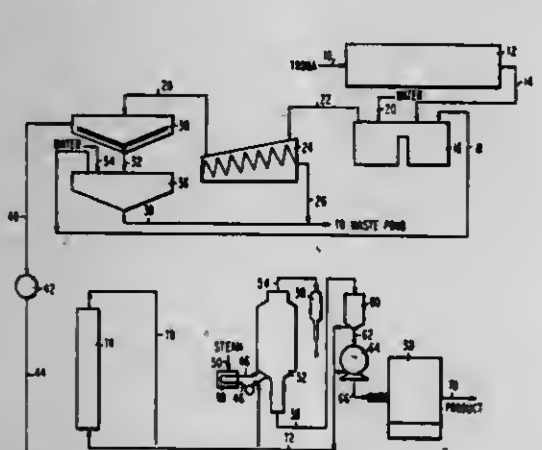

1. In a continuous process for preparing sodium carbonate from crude trona by the steps of

(a) calcining crude trona at a temperature and for a time sufficient to convert the crude trona into crude sodium carbonate;

(b) mixing the crude sodium carbonate in an aqueous liquor to form an aqueous solution of crude sodium carbonate containing suspended insolubles and soluble organic impurities;

(c) clarifying the crude sodium carbonate solution to remove suspended insolubles;

(d) evaporating a portion of water from the clarified sodium carbonate solution to crystallize sodium carbonate crystals therefrom;

(e) separating sodium carbonate crystals from the crystallizer liquor containing organic impurities; and

(f) recycling the crystallizer liquor from step (e) to the evaporation and crystallization step (d);

the improvement which consists essentially of passing only crystallizer liquor, from step (f), containing organic impurities through an activated carbon column to reduce the level of organic impurities present in the crystallizer liquor by at least 20%.

4,299,800
METHOD OF REMOVING OXYGEN FROM A GAS CONTAINING AN UNSATURATED HYDROCARBON

Eiichiro Nishikawa; Masuo Shinya; Hiroshi Furukawa, and Katsumi Kaneko, all of Saitama, Japan, assignors to Toa Nenryo Kogyo Kabushiki Kaisha, Tokyo, Japan

Filed Nov. 21, 1980, Ser. No. 209,168
Claims priority, application Japan, Dec. 28, 1979, 54-170327
Int. Cl.^{3} B01D *53/36*

U.S. Cl. 423—219 **9 Claims**

1. A method of removing oxygen from a gas containing an unsaturated hydrocarbon, which comprises contacting a gas containing an unsaturated hydrocarbon and oxygen with silver and/or gold, or a catalyst containing at least one of them, in the presence of hydrogen.

4,299,801
REGENERATING ALKANOLAMINE DESULFURIZER SOLUTIONS

James B. Lynn; Joseph A. Laslo, both of Bethlehem, and Otto A. Homberg, Easton, all of Pa., assignors to Bethlehem Steel Corporation, Bethlehem, Pa.

Filed Nov. 18, 1980, Ser. No. 207,834
Int. Cl.^{3} B01D *53/34*

U.S. Cl. 423—228 **8 Claims**

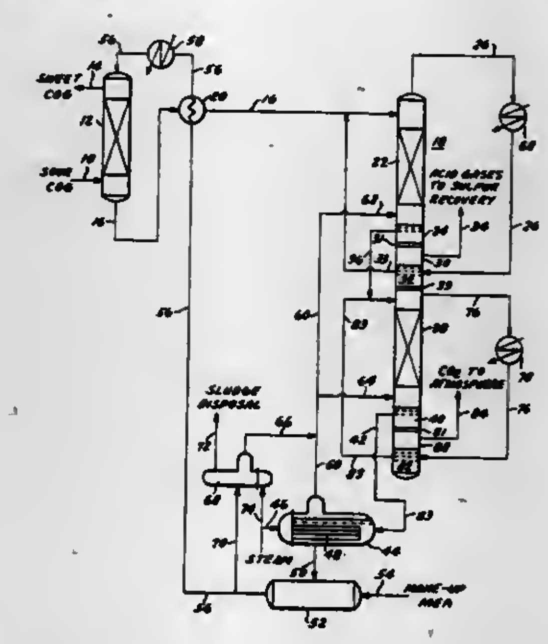

1. In a process for treating an H_2S and CO_2 containing gas stream with an alkanolamine absorbing solution in an absorption stage, removing from the absorption stage a spent alkanolamine absorbing solution containing absorbed H_2S and CO_2, conveying the spent absorbing solution to a desorption stage, steam stripping the absorbed H_2S and CO_2 from the spent absorbing solution to yield an H_2S and CO_2 acid gas stream for routing to a sulfur recovery plant and a regenerated alkanolamine absorbing solution for recycling to the absorption stage, the improvement comprising

(a) passing the spent alkanolamine absorbing solution to a first desorption stage,

(b) stripping the spent alkanolamine absorbing solution with steam to liberate substantially all the absorbed H_2S yielding an acid gas stream for the sulfur recovery plant and a partially regenerated alkanolamine absorbing solution,

(c) passing the partially regenerated alkanolamine absorbing solution to a second desorption stage,

(d) stripping the partially regenerated alkanolamine absorbing solution with steam under substantially the same pressure existing during step (b) to liberate primarily CO_2 and to afford a regenerated alkanolamine absorbing solution for recycling to the absorption stage, and

(e) heating the regenerated alkanolamine absorbing solution to generate stripping steam which is proportioned between the first and the second desorption stages to effect the stripping of the H_2S and the CO_2 in steps (b) and (d), respectively.

4,299,802
PROCESS FOR REMOVING CARBONYL SULFIDE FROM GASEOUS STREAMS

Cyril Tellis, Charleston, W. Va., assignor to Union Carbide Corporation, New York, N.Y.

Filed Mar. 31, 1980, Ser. No. 135,784
Int. Cl.^{3} B01D *53/34*

U.S. Cl. 423—244 **3 Claims**

1. A process for reducing the carbonyl sulfide content of a gaseous stream which has a concentration of carbonyl sulfide of from at least 1 to about 100 parts per million, by volume, which comprises:

(a) providing an adsorbent bed wherein the adsorbent comprises zinc oxide and contains no more than 5%, by weight, of an oxide of an alkali or alkaline earth metal, and

(b) contacting said gaseous stream with said adsorbent bed at a temperature of from about ambient to 250° C. for a period of time sufficient to remove at least 90% of the carbonyl sulfide content of said gaseous stream.

4,299,803
PRODUCTION OF ALKALI METAL PHOSPHATE SOLUTIONS FREE FROM ZINC

Klaus Schrödter, Cologne; Klaus-Peter Ehlers, Erftstadt, both of Fed. Rep. of Germany, and Roelof Mulder, s'Gravenpolder, Netherlands, assignors to Hoechst Aktiengesellschaft, Fed. Rep. of Germany

Filed Dec. 17, 1979, Ser. No. 104,570
Claims priority, application Fed. Rep. of Germany, Dec. 23, 1978, 2855922
Int. Cl.^{3} C01B *25/30*

U.S. Cl. 423—308 **9 Claims**

1. In the process for making alkali metal phosphate solutions from phosphoric acid solutions contaminated with zinc, the improvement which comprises:

(a) admixing the phosphoric acid solution with alkali metal hydroxide or carbonate so as to establish in the resulting mixture a pH-value within the range 8 to 14,

(b) reacting the mixture with H_2S or an alkali metal sulfide solution under a gauge pressure within the range 0.1 to 10 bars and with thorough agitation, and

(c) separating solid matter from the liquid phase of the resulting suspension while maintaining said pressure until the separation step is completed, with the resulting formation of an alkali metal phosphate solution substantially free from zinc contamination.

4,299,804
REMOVAL OF MAGNESIUM AND ALUMINUM IMPURITIES FROM WET PROCESS PHOSPHORIC ACID

Kenneth L. Parks, Lakeland, Fla.; Kyle D. Clevenger, Baton Rouge, La., and Daniel P. McDonald, Yazoo City, Miss., assignors to Agrico Chemical Company, Tulsa, Okla.

Filed Mar. 9, 1978, Ser. No. 884,823
Int. Cl.^{3} C01B *25/16*

U.S. Cl. 423—321 R **16 Claims**

1. A method for removing magnesium and aluminum impurities from wet process phosphoric acid without subjecting said acid to treatment for silicon removal, consisting essentially of: adding a fluoride ion donating compound to said unconcentrated wet process phosphoric acid, said fluoride ion donating compound being added in a quantity sufficient to effect an initial fluorine to aluminum ion ratio of from about 3.5/1 to about 7/1; and

precipitating the resulting insoluble crystalline compounds and separating same from said wet process phosphoric acid.

4,299,805
REGENERATION OF CARBON EMPLOYED IN THE WET PROCESS PRODUCTION OF PHOSPHORIC ACID

Bruce D. Wells, Pittsburgh, Pa., assignor to Calgon Corporation, Pittsburgh, Pa.

Continuation of Ser. No. 892,043, Mar. 30, 1978, abandoned. This application Aug. 21, 1979, Ser. No. 68,316
Int. Cl.^{3} C01B *25/16*

U.S. Cl. 423—321 R **14 Claims**

1. In the process of producing phosphoric acid by treatment with activated carbon to remove impurities from brown phosphoric acid and regenerating the activated carbon, the improvement which comprises regeneration of the activated carbon employed in the filtration of brown phosphoric acid comprising the steps of water washing the activated carbon to remove residual brown phosphoric acid; contacting the activated carbon with an aqueous solution of a base where the solution is from about 1% to 50% by weight in said base at a temperature of from 20° C. to 60° C. for a period of from 1-10 hours; washing the activated carbon with water to remove residual base; contacting the activated carbon with an aqueous solution of 0.5 to 2 N mineral acid other than brown phosphoric acid at a temperature of from 20° C. to 60° C. for a period of 1-16 hours; removing the mineral acid from the activated carbon and resuming filtration of brown phosphoric acid.

4,299,806
DECOLORIZATION OF ELEMENTAL YELLOW PHOSPHORUS

Mark A. Kack, Upper Montclair, N.J., and Gary K. Miller, Portchester, N.Y., assignors to Stauffer Chemical Company, Westport, Conn.

Filed Dec. 29, 1980, Ser. No. 220,882
Int. Cl.^{3} C01B *25/047*

U.S. Cl. 423—322 **8 Claims**

1. A process of purifying elemental yellow phosphorus to obtain a colorless appearing phosphorus which comprises contacting yellow phosphorus with a solution comprised of a tetraalkyl ammonium halide in aliphatic alcohol.

4,299,807
METHODS OF PRODUCING KAOLIN PIGMENTS
Brian R. Angel, Westfield, and Robert W. Bradshaw, Bricktown, both of N.J., assignors to Yara Engineering Corporation, Elizabeth, N.J.
Continuation of Ser. No. 897,177, Apr. 17, 1978, abandoned. This application Jun. 3, 1980, Ser. No. 156,027
Int. Cl.³ C01B *33/26;* C04B *33/04*
U.S. Cl. 423—327 8 Claims

1. A method of producing kaolin of improved brightness, opacity and particle size consisting essentially of the steps of:
a. degritting a raw kaolin;
b. heating said kaolin with only the grit removed following degritting to the temperature and for a time to produce substantially minimum brightness of said kaolin and aggregation of said kaolin;
c. leaching said heated clay; and
d. comminuting said aggregated clay following one of said heating and leaching steps.

4,299,808
CRYSTALLINE CHROMOSILICATES AND PROCESS OF PREPARATION
Marvin R. Klotz, Batavia, Ill., assignor to Standard Oil Company (Indiana), Chicago, Ill.
Continuation-in-part of Ser. No. 927,843, Jul. 25, 1978, abandoned, which is a continuation of Ser. No. 733,269, Oct. 18, 1978, abandoned. This application Aug. 23, 1979, Ser. No. 69,236
Int. Cl.³ C01B *33/20*
U.S. Cl. 423—331 51 Claims

1. A crystalline chromosilicate, which chromosilicate comprises a molecular sieve material providing an X-ray diffraction pattern comprising the following X-ray diffraction lines and assigned strengths:

Interplanar Spacing d, A	Assigned Strength
11.04 ± 0.2	S
10.04 ± 0.2	S
3.80 ± 0.07	VS
3.74 ± 0.05	M
3.70 ± 0.05	S
3.64 ± 0.05	MS

and having the following composition in terms of mole ratios of oxides:

$$0.9\pm0.2[WR_2O+(1-W)M_{2/n}O]:Cr_2O_3:YSiO_2:ZH_2O,$$

wherein R is an alkylammonium cation, M is at least one cation having a valence of n, Y is a value within the range of about 4 to about 500, Z is a value within the range of about 0 to about 160, and W is a value that is greater than or equal to 0 and less than or equal to 1.

4,299,809
PROCESS FOR THE MANUFACTURE OF CALCIUM CHLORIDE
Gerard Teyssier, Aramon, and Marcel Lepant, Paris, both of France, assignors to I.S.O., Aramon, France
Filed Jan. 14, 1980, Ser. No. 111,788
Claims priority, application France, Jan. 12, 1979, 79 01299
Int. Cl.³ C01F *11/24;* C01B *31/20*
U.S. Cl. 423—497 4 Claims

1. A process for the production of calcium chloride by the reaction of hydrochloric acid with calcium carbonate in the upper sealed portion of a reactor bordered on one side by a filtration sieve, a charge of said calcium carbonate resting on said sieve, said process comprising reacting said hydrochloric acid with said calcium carbonate by introducing said calcium carbonate and said hydrochloric acid on the same side of said filtration sieve to form carbon dioxide and calcium chloride solution, and pressuring said solution of calcium chloride

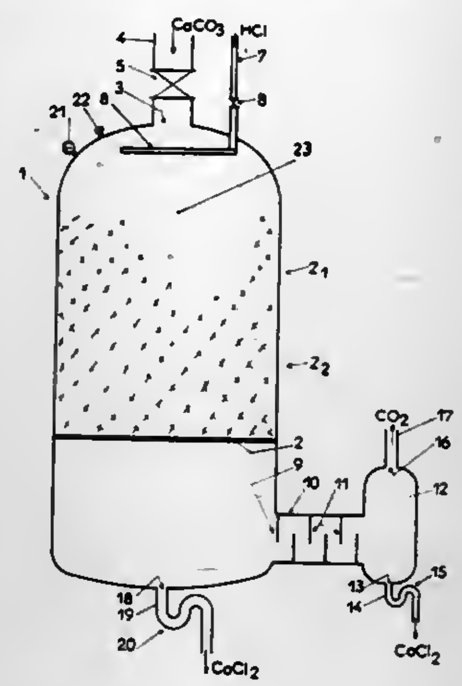

downwardly by means of said carbon dioxide across said sieve and towards an outlet of said reactor.

4,299,810
PROCESS FOR SEPARATING SELENIUM AND TELURIUM FROM EACH OTHER
Gary N. Snow, Salt Lake City, Utah, assignor to Kennecott Corporation, Stamford, Conn.
Filed Sep. 3, 1980, Ser. No. 183,819
Int. Cl.³ C01B *19/02*
U.S. Cl. 423—510 9 Claims

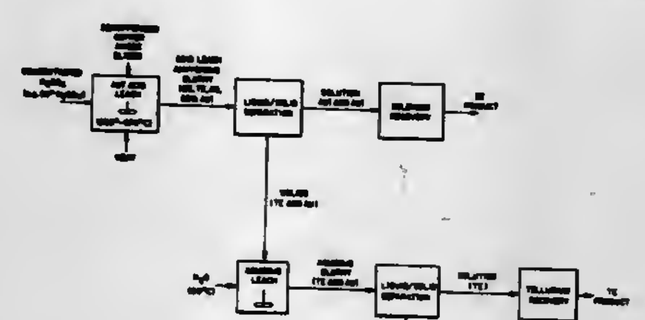

1. A process for separating selenium and tellurium from each other, comprising the steps of leaching a material containing selenium and tellurium values with sulfuric acid to dissolve both the selenium and tellurium values; continuing the leaching under substantially anhydrous conditions with concentrated sulfuric acid at an elevated temperature and for a time period effective to precipitate tellurium values from solution; and separating the liquid and the solids phases of the concentrated sulfuric acid leach slurry.

4,299,811
DEGASSING MOLTEN SULFUR
Thomas H. Ledford, Baton Rouge, La., and Howard Lerner, Parsippany, N.J., assignors to Exxon Research & Engineering Co., Florham Park, N.J.
Filed Aug. 1, 1980, Ser. No. 174,504
Int. Cl.³ C01B *17/027*
U.S. Cl. 423—578 R 12 Claims

1. A method for reducing the hydrogen sulfide and hydrogen polysulfides concentration in molten sulfur comprising the addition to the molten sulfur of an effective amount of a degassing agent, said degassing agent selected from the class consisting of inorganic phosphorous compounds, urea and urea derivatives without the further addition to the molten sulfur of sulfur dioxide.

4,299,812
IMMUNOASSAY OF THYROXINE IN NEONATES USING DRIED BLOOD SAMPLES
Robert F. Coombes, Walnut, Calif., assignor to Diagnostic Products Corp., Los Angeles, Calif.
Filed Nov. 29, 1978, Ser. No. 964,593
Int. Cl.³ G01N *33/48;* G01T *1/00*
U.S. Cl. 424—1 36 Claims

1. In a process for the immunoassay of a thyronine, wherein the immunoassay consists of an incubation step in which assay tubes contain a labeled form of the thyronine, a calibrator sample or unknown samples, and an antiserum to the thyronine; followed, except in the case of homogeneous immunoassays, by a separation step in which antibody-bound thyronines are separated from free thyronines; followed by a detection step in which the amount of labeled thyronine in the bound or free fraction is determined or, in the case of homogeneous immunoassays, the change in activity such as radioactivity or enzyme activity caused by antibody-binding to some of the labeled thyronine is determined, the improvement comprising:
incubating said assay tubes each of which contain a labeled form of the thyronine, calibrator or unknown sample, and an antiserum to the thyronine at a pH above 8.9 and below the pH which causes excessive interference with the antigen-antibody reaction or with the separation of bound from free antigen, or substantial decomposition or instability of the reagents.

4,299,813
ASSAY KIT AND METHOD
Solomon H. Snyder, 2300 W. Rogers Ave., Baltimore, Md. 21209
Filed May 17, 1979, Ser. No. 40,292
Int. Cl.³ G01N *33/48;* G01T *1/00;* B65D *71/00*
U.S. Cl. 424—1 34 Claims

1. The method of determining the concentration of tricyclic antidepressant drugs and any active metabolites thereof in a body fluid containing same comprising the independent procedures of (a) mixing together muscarinic cholinergic receptor material, radioactive muscarinic cholinergic receptor binder and body fluid, and measuring the amount of the radioactive muscarinic cholinergic binder on the muscarinic cholinergic receptor material and (b) mixing together a concentration of a standard amount of non-radioactive muscarinic cholinergic receptor binder, muscarinic cholinergic receptor material and radioactive muscarinic cholinergic receptor binder and measuring the amount of radioactive muscarinic cholinergic receptor binder on the muscarinic cholinergic receptor material.

4,299,814
RADIOIMMUNOASSAY OF MIF
Eva J. Brandt, Ellisville, and Samuel S. Asculai, St. Louis, both of Mo., assignors to Monsanto Company, St. Louis, Mo.
Filed May 25, 1979, Ser. No. 42,662
Int. Cl.³ G01N *23/48;* G01T *1/00*
U.S. Cl. 424—1 11 Claims

1. A method of detecting the presence of a low level of migration inhibitory factor material in a test solution comprising reacting
(a) a test solution containing an unknown amount of migration inhibitory factor antigen,
(b) a known amount of purified migration inhibitory factor antigen which has been radiolabeled,
(c) a known amount of antibodies having high specificity to migration inhibitory factor,
and thereafter precipitating and separating the resulting antigen-antibody complex from unbound antigen and measuring the radioactive content of said complex, said antibodies to migration inhibitory factor being produced by immunization of animals with purified migration inhibitory factor antigen obtained from the growth of human lymphocytes under tissue culture conditions.

4,299,815
CARCINOEMBRYONIC ANTIGEN DETERMINATION
Hans J. Hansen, Allendale; Alfred D. Myl, Elmwood Park, and Jacques P. Vandevoorde, West Caldwell, all of N.J., assignors to Hoffmann-La Roche Inc., Nutley, N.J.
Filed Feb. 8, 1980, Ser. No. 120,017
Int. Cl.³ G01N *33/48;* G01T *1/00;* G01N *33/54*
U.S. Cl. 424—1 13 Claims

1. A method of determining the concentration of carcinoembryonic antigen in a sample of serum or plasma from a human which comprises:
(a) adding sufficient water to said sample to dilute it to a dilution of from about 1:8 to about 1:50,
(b) heating said diluted sample to a temperature below that which will cause the protein present in said sample to coagulate for a period of from about 3 to about 30 minutes, thus neutralizing materials in said sample which would interfere with said determination;
(c) adding an excess of an antibody to CEA to said sample and incubating for a predetermined time;
(d) adding to said sample an amount of carcinoembryonic antigen labeled with a labeling substance capable of being quantitatively determined at least sufficient to react with the amount of antibody added in step (c) and incubating for a predetermined time;
(e) adding to said sample an insolubilizing agent thus forming a solid phase containing antibody-bound CEA and a liquid phase containing unbound CEA;
(f) separating said solid and liquid phases;
(g) determining the amount of said labeling substance present in either said solid or said liquid phase; and
(h) determining the amount of carcinoembryonic antigen present in said sample by comparison against a standard.

4,299,816
ACARICIDAL PREPARATION FOR DIAGNOSIS AND CONTROL OF ECTOPARASITES OF BEES
Anisim A. Polyakov, Proletarsky prospekt, 19, korpus 2, kv. 92; Vladimir S. Yarnykh, ulitsa Krasikova, 7, kv. 30, both of Moscow; Anatoly M. Smirnov, ulitsa Novaya, 5, kv. 86, Zheleznodorozhny Moskovskoi oblasti; Mark A. Simetsky, Teply Stan, 4 Mikroraion, korpus 45, kv. 136, Moscow; Evgeny A. Kudryavtsev, ulitsa Parkovaya, 3, kv. 30, Moskovskaya oblast, Balashikhinsky raion; German A. Talanov, Pulkovskaya ulitsa, 25, kv. 24; Alexandr A. Zakomyrdin, B. Rogozhsky pereulok, 10, korpus 1, kv. 127, both of Moscow; Boris N. Rudenko, OPKH "Milet", Zheleznodorozhny Moskovskoi oblasti; Pavel P. Rakhmania, prospekt Mira, 18, korpus 2, kv. 100, and Vyacheslav N. Guschin, ulitsa Kubinka, 10, kv. 31, both of Moscow, all of U.S.S.R.
Continuation of Ser. No. 804,249, Jun. 7, 1977, abandoned. This application Sep. 4, 1979, Ser. No. 72,554
Int. Cl.³ A61L *9/04;* A01N *47/10*
U.S. Cl. 424—45 18 Claims

1. A method of controlling bee ectoparasite diseases selected from the group consisting of acarine and varroatosis comprising contacting bee colonies with a finely divided acaricidal composition comprising 0.006 to 0.167% by weight of an alkyl or naphthyl ester of N-methyl-carbamic acid, in acetone, at a temperature of 15°-30° C., at concentrations safe to bees and effective to control said ectoparasite diseases.

4,299,817
HAIR CARE COMPOSITIONS
Roy B. Hannan, III, Danbury, Conn.; Errol D. Goddard, Haworth, N.J., and Denise C. Galante, New Rochelle, N.Y., assignors to Union Carbide Corporation, New York, N.Y.
Continuation-in-part of Ser. No. 827,264, Aug. 24, 1977, abandoned. This application Jun. 15, 1979, Ser. No. 48,975
Int. Cl.[3] A61K *7/06*
U.S. Cl. 424—70 **7 Claims**

1. A method of conditioning hair which comprises applying to said hair an effective amount of a composition which comprises:

A. from about 0.1 to about 10.0 weight weight percent based on the total weight of the composition of water insoluble polyelectrolyte complex which is the ionic reaction product of one or more polycationic polymers having a cationic charge density of not more than 0.004 and one or more polyanionic polymers; and

B. water,

wherein said polyelectrolyte complex provides improved wave-setting capacity over that shown individually by said polycationic or polyanionic polymers.

4,299,818
CONTROL OF INSECTS WITH 3,3,7-TRIMETHYL-2,9-DIOXATRICYCLO[3.3.1.0^{4,7}]NONANE IN MIXTURE WITH ETHANOL, AND OPTIONALLY, α-PINENE
Jean P. Vité, Freiburg, Fed. Rep. of Germany, and Alf Bakke, As, Norway, assignors to Borregaard Industries Limited, Norge, Sarpsborg, Norway
Filed Jul. 24, 1980, Ser. No. 171,841
Claims priority, application Norway, Jul. 25, 1979, 792454
Int. Cl.[3] A01N *25/00*
U.S. Cl. 424—84 **10 Claims**

1. A composition for attracting Ambrosia beetles of the genus Trypodendron, comprising lineatin and ethanol in a combined amount which is effective to attract the beetles.

4,299,819
PROCESS FOR TREATING BURN VICTIMS
Magdalena G. Eisinger, Demarest, N.J., assignor to Sloan-Kettering Institute for Cancer Research, New York, N.Y.
Division of Ser. No. 749, Jan. 2, 1979. This application Sep. 13, 1979, Ser. No. 75,375
Int. Cl.[3] A61K *35/12;* **A01N** *1/02*
U.S. Cl. 424—95 **13 Claims**

1. Process for treating a burn victim which comprises:
(i) separating the epidermis in a sample of human skin from the dermis;
(ii) dissociating the epidermis into epidermal cells;
(iii) growing the epidermal cells in the absence of dermal components into a pure epidermal sheet in a tissue culture medium having a pH of from about 5.6 to about 5.9; and
(iv) applying the epidermal sheet to an afflicted area on the burn victim.

4,299,820
THERAPEUTIC PROCESS EMPLOYING AMIDES OF L AND DL PHENYLGLYCINES
Ian T. Barnish, Ramsgate; Peter E. Cross, and John C. Danilewicz, both of Canterbury, all of England, assignors to Pfizer Inc., New York, N.Y.
Continuation of Ser. No. 900,802, Apr. 27, 1978, abandoned. This application Feb. 29, 1980, Ser. No. 126,104
Claims priority, application United Kingdom, May 6, 1977, 19001/77
Int. Cl.[3] A61K *37/00, 31/24*
U.S. Cl. 424—177 **13 Claims**

1. A method of treating a mammalian subject suffering from ischemic heart disease or cardiac failure attributable to reduced oxygen availability to the heart which comprises orally or parenterally administering to said subject from 25–1400 mg. per day of an L-derivative of p-hydroxyphenylglycine or 50–2800 mg. per day of a DL-derivative of p-hydroxyphenylglycine, said derivate having the formula T,0270 or a pharmaceutically acceptable salt thereof, wherein R is hydrogen or methyl;

R^1 is hydroxy, amino or alkoxy having from one to six carbon atoms;

R^2 is a member selected from the group consisting of hydrogen, phenyl, hydroxyphenyl, benzyl, p-hydroxybenzyl, alkyl having from one to six carbon atoms and —$(CH_2)_n$COOR^5, where n is 1 or 2 and R^5 is hydrogen, methyl or ethyl.

4,299,821
TRIPEPTIDES ACTING ON THE CENTRAL NERVOUS SYSTEM AND A PROCESS FOR THE PREPARATION THEREOF
Lajos Kisfaludy; Tamas Szirtes, both of Budapest; Lajos Balaspiri, Szeged; Eva Palosi, Budapest; Laszlo Szporny, Budapest, and Adam Sarkadi, Budapest, all of Hungary, assignors to Richter Gedeon Végyeszeti Gyár Rt., Budapest, Hungary
Filed Jun. 27, 1980, Ser. No. 163,829
Claims priority, application Hungary, Jun. 28, 1979, RI 717
Int. Cl.[3] A61K *37/00;* **C07C** *103/52*
U.S. Cl. 424—177 **5 Claims**

1. A peptide derivative of the general formula Glp-X-Y-NH-A, wherein

X is L-norleucyl, L-leucyl, D-leucyl, L-isoleucyl, L-norvalyl, L-valyl, L-prolyl, L-threonyl, L-2-aminobutyryl, L-2-aminodecanoyl, L-cyclohexylalanyl, O-tert.-butyl-L-seryl or L-histidyl group,

Y is a L-prolyl, L-homoprolyl or D-pipecolyl group, and

A is hydrogen, alkyl of 1 to 10 carbon atoms or alkyl of 1 to 3 carbon atoms substituted with a dimethylamino group,

with the proviso that when X is L-histidyl, then Y is not L-prolyl, when X is L-norleucyl, L-leucyl, D-leucyl, L-isoleucyl, L-norvalyl, L-valyl, L-prolyl, L-threonyl, L-2-aminobutyryl, L-2-aminodecanoyl, L-cyclohexylalanyl or O-tert.-butyl-L-seryl, then Y is not L-homoprolyl or D-pipecolyl and when X is L-leucyl, D-leucyl, L-norleucyl, L-isoleucyl, L-norvalyl or L-valyl, then A is not hydrogen,

or a pharmaceutically acceptable salt or complex thereof.

4,299,822
N-TRIFLUOROACETYLADRIAMYCIN-14-O-HEMIGLUTARATE AND -HEMIADIPATE AND THERAPEUTIC COMPOSITIONS CONTAINING SAME
Mervyn Israel, Needham, Mass., and Gopalakrishnan Potti, Lexington, Ky., assignors to Sidney Farber Cancer Institute, Inc., Boston, Mass.
Filed Jan. 9, 1980, Ser. No. 157,861
Int. Cl.[3] C07H *15/24;* **A61K** *31/71*
U.S. Cl. 424—180 **6 Claims**

1. N-Trifluoroacetyladriamycin-14-O-hemiglutarate.

3. A therapeutic composition exhibiting antitumor activity against murine P388 and murine L1210 leukemias in mice, said composition consisting essentially of a pharmaceutically acceptable non-toxic carrier and an effective amount of a compound as claimed in claim 1.

4,299,823
PYRAZOLO PYRIMIDINE RIBOSIDE COMPOUNDS, PHARMACEUTICAL COMPOSITIONS AND METHOD OF USE
Janet L. Rideout, Raleigh; Thomas A. Krenitsky, and Gertrude B. Elion, both of Chapel Hill, all of N.C., assignors to Burroughs Wellcome Co., Research Triangle Park, N.C.
Filed Jun. 13, 1980, Ser. No. 159,240
Claims priority, application United Kingdom, Jun. 14, 1979, 20698/79
Int. Cl.[3] A61K *31/70;* **C07H** *19/18*
U.S. Cl. 424—180 **15 Claims**

1. A compound of formula (I)

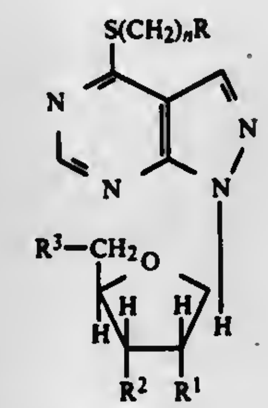

wherein n is an integer of 1 to 6 and R is lower alkoxy or lower alkythio group or phenoxy or phenylthio group or an unsubstituted or mono-substituted phenyl group, or, when n has the value 1, a group —C≡C—R^5, wherein R^5 is a mono- di- or tri-substituted phenyl or an unsubstituted phenyl, substituents for the aforementioned phenyl groups being selected from halogen atoms and lower alkyl, lower alkoxy, trifluoromethyl, benzyloxy, phenoxy, amino, mono- or di-lower alkylamino, and hydroxyl, and either R^1, R^2 and R^3 are the same and are hydroxyl or acyloxy groups —O—CO—R^4 wherein R^4 is a hydrogen atom or a lower alkyl group or a substituted or unsubstituted phenyl group wherein the substituents are selected from the group consisting of amino, hydroxyl, nitro, lower alkyl, lower alkoxy or halogen or R^1 and R^2 are hydroxyl or acyloxy groups as hereinbefore defined and R^3 is a phosphate group, or a salt thereof.

15. A method for combatting coccidial infections of livestock comprising the administration to the livestock of an effective, non-toxic coccidiosis combatting amount of the compound or salt of claims 1, 7, 8, 9, 10, 11 or 12 in foodstuff or drinking water in a concentration of from about 25 ppm to 400 ppm.

4,299,824
SUBSTITUTED PYRAZOLO PYRIMIDINE RIBOSIDE COMPOUNDS, PHARMACEUTICAL COMPOSITIONS AND METHOD OF USE
Janet L. Rideout, Raleigh; Thomas A. Krenitsky, and Gertrude B. Elion, both of Chapel Hill, all of N.C., assignors to Burroughs Wellcome Co., Research Triangle Park, N.C.
Filed Jun. 13, 1980, Ser. No. 159,245
Claims priority, application United Kingdom, Jun. 14, 1979, 20700/79
Int. Cl.[3] A61K *31/70;* **C07H** *19/18*
U.S. Cl. 424—180 **12 Claims**

1. A compound of formula (I)

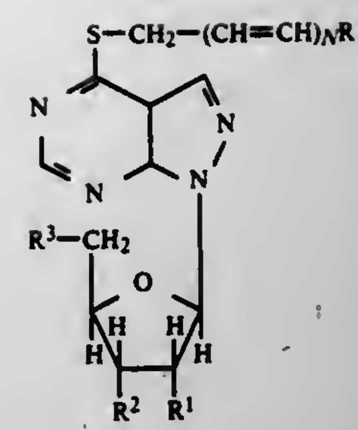

wherein n has the value 1 or 2 and R is phenyl, phenyl bearing one or more substitutents selected from the group consisting of phenyl, lower alkyl, lower alkoxyl, trifluoromethyl, benzyloxy, phenoxy, amino, mono- or di- lower alkyl amino, hydroxyl and halogen and either R^1, R^2 and R^3 are the same and are hydroxy or acyloxy groups, —O—CO—R^4 wherein R^4 is hydrogen, lower alkyl, phenyl or phenyl substituted by amino, hydroxy, nitro, lower alkyl, lower alkoxy or halogen or R^1 and R^2 may be hydroxyl or acyloxy groups as hereinbefore defined and R^3 is a phosphate group or a pharmaceutically acceptable salt thereof.

11. A method for combatting coccidial infections of livestock comprising the administration of an effective, non-toxic coccidiosis combatting amount of the compound or salt of claim 1, 7, 8 or 9.

4,299,825
CONCENTRATED XANTHAN GUM SOLUTIONS
Ho-Lun Lee, New Providence, N.J., assignor to Celanese Corporation, New York, N.Y.
Filed Jul. 3, 1980, Ser. No. 165,478
Int. Cl.[3] A61K *31/70;* **E21B** *43/22*
U.S. Cl. 424—180 **16 Claims**

1. A process for clarifying and concentrating raw Xanthomonas heteropolysaccharide fermentation broth which comprises (1) filtering the broth to remove substantially all of the insoluble fermentation solids and provide a clarified solution containing between about 0.1–3 weight percent of xanthan gum; and (2) subjecting the clarified xanthan gum solution to ultrafiltration to yield a clarified and concentrated xanthan gum solution which contains between about 8–15 weight percent of xanthan gum, and which exhibits a solution viscosity between about 10,000–20,000 centipoises.

12. A xanthan gum solution containing between about 8–15 weight percent of xanthan gum, which solution exhibits a viscosity between about 10,000–20,000 centipoises, and is characterized by the following viscosity/concentration profile:

Weight %	Viscosity, centipoises
15	10,000–20,000
12	9000–17,000
10	7000–15,000
8	6000–10,000
6	5000–8000
4	3500–6000
2	2000–3000
1	1300–1800
0.8	1000–1400
0.6	800–1100
0.4	600–740
0.2	370–430
0.1	280–180
0.05	50–200

4,299,826
ANTI-ACNE COMPOSITION
Wilmer L. Luedders, Cincinnati, Ohio, assignor to The Procter & Gamble Company, Cincinnati, Ohio
Filed Oct. 12, 1979, Ser. No. 84,252
Int. Cl.³ A61K *31/71*
U.S. Cl. 424—181 **14 Claims**

1. A composition for topical application to skin in the treatment of skin disorders and dermatoses of bacterial origin, comprising:
(1) a minor proportion of an antibiotic agent selected from the group consisting of erythromycin and derivatives of erythromycin; and
(2) a pharmaceutically-acceptable penetrating carrier comprising
(a) a penetration enhancing amount of diisopropyl sebacate; and
(b) the balance comprising a dermatologically acceptable alcohol, or mixture thereof.

4,299,827
O-ETHYL S-N-PROPYL O-[4-METHYLTHIO(SULFINYL)(SULFONYL)-2(3)-METHOXYPHENYL] PHOSPHOROTHIOLATES AS PESTICIDES
Kazuo Konishi, Takatsuki, and Yasuo Sato, Kyoto, both of Japan, assignors to Takeda Chemical Industries, Ltd., Osaka, Japan
Filed Apr. 2, 1980, Ser. No. 136,483
Claims priority, application Japan, Apr. 3, 1979, 54/40643
Int. Cl.³ A01N *57/14;* C07F *9/165*
U.S. Cl. 424—216 **9 Claims**

1. An organophosphate of the formula:

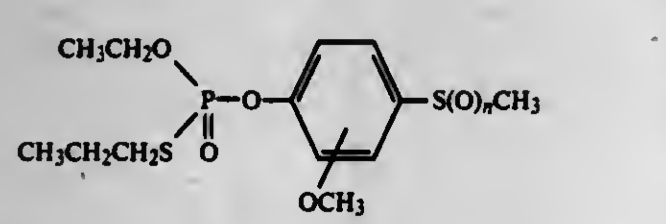

wherein n is zero or an integer of 1 or 2.

9. A pesticidal composition which contains a pesticidally effective amount of at least one organophosphate of the formula:

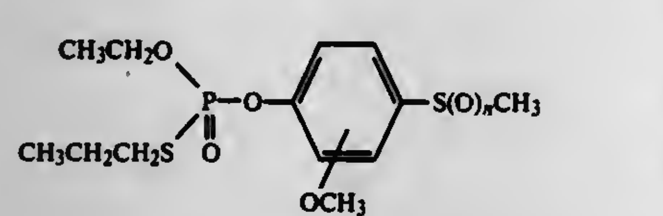

wherein n is zero or an integer of 1 or 2, together with at least one suitable carrier or vehicle.

4,299,828
CORTICOSTEROID STICK FORMULATIONS
Yu-chang J. Wang, and Thomas M. Wong, both of North Brunswick, N.J., assignors to E. R. Squibb & Sons, Inc., Princeton, N.J.
Continuation of Ser. No. 44,293, May 31, 1979, abandoned. This application Oct. 16, 1980, Ser. No. 197,711
Int. Cl.³ A61K *31/56;* A01N *45/00*
U.S. Cl. 424—238 **14 Claims**

1. A method for preventing growth and spread of bacteria on a steroid stick composition from one application area to another, the steroid stick composition including an effective amount of an anti-inflammatory corticosteroid, one or more oleaginous solvents in which said corticosteroid is fully dissolved, and one or more waxes to impart body and stiffness, which method comprises including in the steroid stick composition 1,3-butylene glycol in an amount within the range of from about 1 to about 8% by weight of the steroid stick composition, said 1,3-butylene glycol being separate and apart from the oleaginous solvents.

4,299,829
2-LOWER ALKYL-7-SUBSTITUTED-2 OR 3-CEPHEM 4-CARBOXYLIC ACID COMPOUNDS
Takashi Kamiya, Suita, and Takao Takaya, Sakai, both of Japan, assignors to Fujisawa Pharmaceutical Co., Ltd., Osaka, Japan
Continuation-in-part of Ser. No. 836,909, Sep. 26, 1977, Pat. No. 4,152,433, and Ser. No. 862,606, Dec. 20, 1977, abandoned, which is a continuation-in-part of Ser. No. 836,909, , which is a continuation-in-part of Ser. No. 808,615, Jun. 21, 1977, abandoned. This application Jun. 14, 1978, Ser. No. 915,459
Claims priority, application Japan, Jun. 28, 1976, 51/26740; Jan. 5, 1977, 52/262; Dec. 13, 1977, 52/150276
The portion of the term of this patent subsequent to May 1, 1996, has been disclaimed.
Int. Cl.³ C07D *501/20*
U.S. Cl. 424—246 **14 Claims**

1. A compound of the formula:

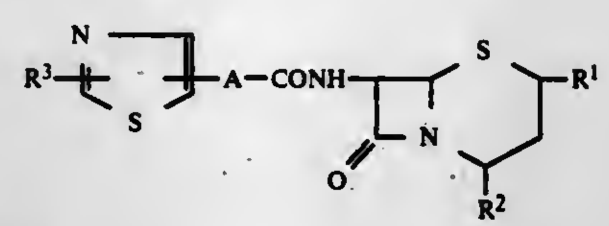

wherein
R^1 is (C_1 to C_6)alkyl,
R^2 is carboxy or a protected carboxy group,
R^3 is amine or a protected amino group and
A is (C_2 to C_6)-alkoxyimino($C_1$to C_6)alkylene, and pharmaceutically acceptable salt thereof.

4,299,830
1,5-METHANO-1,4-BENZODIAZOCINES, INTERMEDIATES THEREFOR, AND METHOD OF USE AND COMPOSITIONS THEREOF
Franklyn W. Gubitz, Nassau, N.Y., assignor to Sterling Drug Inc., New York, N.Y.
Filed Jun. 20, 1980, Ser. No. 161,280
Int. Cl.³ C07D *471/08;* A61K *31/495*
U.S. Cl. 424—250 **20 Claims**

1. 4-Q-9-RR'N-3,4,5,6-tetrahydro-2H-1,5-methano-1,4-benzodiazocine having the structural formula

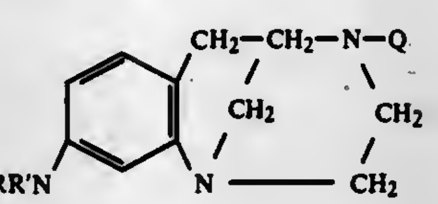

wherein
Q is propyl, isobutyl, neopentyl, allyl, 2-methyl-2-propenyl, 2-chloro-2-propenyl, cis-3-chloro-2-propenyl, cis-3-chloro-2-butenyl, trans-3-chloro-2-butenyl, propargyl, cyclopropylmethyl or (2,2-dichlorocyclopropyl)methyl; and
R and R' are both hydrogens or both methyls; or
R is hydrogen and R' is methyl, ethyl, propyl, butyl, isobutyl or benzyl; or
an acid addition salt thereof.

19. The process of producing analgesia in a mammal in pain which comprises administering to the mammal an analgesically effective amount of a compound according to claim 1 or a pharmaceutically acceptable acid addition salt thereof in a pharmaceutically acceptable carrier.

4,299,831
2-TRIFLUOROMETHYL-3-QUINOLINE CARBOXAMIDES, ANALGESIC AND ANTI-INFLAMMATORY COMPOSITIONS AND METHODS EMPLOYING THEM
Francois Clemence, Paris; Roger Deraedt, Les Pavillons-sous-Bois; Andre Allais, Gagny, and Odile Le Martret, Paris, all of France, assignors to Roussel Uclaf, Paris, France
Filed Nov. 27, 1979, Ser. No. 97,711
Claims priority, application France, Dec. 8, 1978, 78 34592
Int. Cl.³ A61K *31/47;* C07D *215/56*
U.S. Cl. 424—251 **45 Claims**

1. A compound selected from the group consisting of 3-quinoline carboxamides of the formula

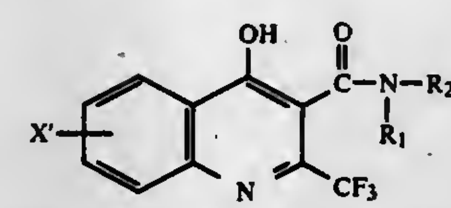

wherein X' is in the 5,6,7 or 8-position and is selected from the group consisting of hydrogen, halogen, straight or branched alkyl and alkoxy of 1 to 5 carbon atoms, —CF_3, —SCF_3 and —OCF_3, R_1 is selected from the group consisting of hydrogen and alkyl of 1 to 4 carbon atoms, R_2' is selected from the group consisting of thiazolyl, 4,5-dihydrothiazolyl, pyridinyl, oxazolyl, isoxazolyl, imidazolyl, pyrimidyl and tetrazolyl, all optionally substituted with alkyl of 1 to 4 carbon atoms and their non-toxic, pharmaceutically acceptable acid addition salts.

16. An anti-inflammatory and analgesic composition comprising an analgesically and anti-inflammatorily effective amount of at least one compound of claim 1 and an excipient.

31. A method of relieving pain and inflammation in warm-blooded animals comprising administering to warm-blooded animals an analgesically and anti-inflammatorilly effective amount of at least one compound of claim 1.

4,299,832
SUBSTITUTED THEOPHYLLINE COMPOUNDS
Roger C. Brown, Loughborough; Rodney A. Brown, East Leake, and Stephen E. O'Connor, Long Whatton, all of England, assignors to Fisons Limited, London, England
Filed Oct. 30, 1979, Ser. No. 89,286
Claims priority, application United Kingdom, Nov. 11, 1978, 44168/78; Mar. 1, 1979, 7353/79
Int. Cl.³ C07D *473/08*
U.S. Cl. 424—253 **8 Claims**

1. The substituted theophyllines of the formula:

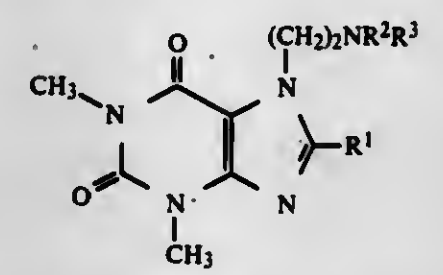

wherein R^1, R^2 and R^3, which may be the same or different, each represent alkyl of 1 to 6 carbon atoms, cycloalkyl of 3 to 7 carbon atoms, or phenyl each of which may be unsubstituted or substituted by one or more hydroxy groups, alkoxy or alkylthio groups of 1 to 4 carbon atoms, halogen atoms, cyano groups, nitro groups, carboxy groups, alkoxycarbonyl groups of 2 to 5 carbon atoms, amino groups, alkylamino groups of 1 to 4 carbon atoms or dialkylamino groups of 2 to 8 carbon atoms, or when the group is phenyl, by one or more alkyl groups of 1 to 4 carbon atoms;
or R^2 and R^3 together represent a hydrocarbon chain or 3 to 6 carbon atoms optionally interrupted by a heteroatom;
and n represents an integer of from 1 to 6,
and the acid addition salts thereof.

4,299,833
1-ISOPROPYL- AND 1-ISOBUTYL-3,7-DIMETHYL XANTHINE AS MEDICAMENTS
Georges Philippossian, Lausanne, and Marc Enslen, Yverdon, both of Switzerland, assignors to Societe d'Assistance Technique Pour Produits Nestle S.A., Lausanne, Switzerland
Filed May 8, 1980, Ser. No. 148,044
Claims priority, application Switzerland, May 22, 1979, 4780/79
Int. Cl.³ A61K *31/52*
U.S. Cl. 424—253 **2 Claims**

1. A pharmaceutical composition containing an effective quantity of 1-isopropyl-3,7-dimethyl xanthine in combination with an inert pharmaceutically acceptable carrier to produce a neuroleptic effect.

4,299,834
8-PHENYL-PURINES AND PHARMACEUTICAL COMPOSITIONS CONTAINING SAME
Volkhard Austel; Eberhard Kutter, both of Biberach; Joachim Heider, Warthausen, and Willi Diederen, Biberach, all of Fed. Rep. of Germany, assignors to Boehringer Ingelheim Gesellschaft mit beschränkter Haftung, Ingelheim am Rhein, Fed. Rep. of Germany
Filed Jul. 8, 1980, Ser. No. 166,709
Claims priority, application Fed. Rep. of Germany, Jul. 11, 1979, 2927988
Int. Cl.³ C07D *473/00*
U.S. Cl. 424—253 **10 Claims**

1. A compound of the formula

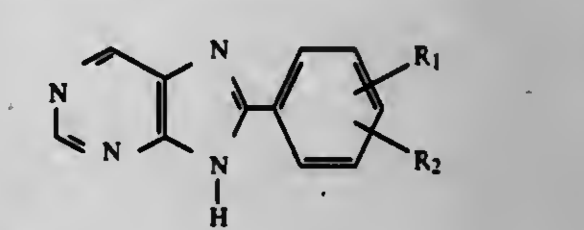

(I)

wherein
R_1 is a halogen atom; an alkoxy group of from 1 to 3 carbon atoms, the alkoxy group being optionally substituted by an alkylmercapto, alkylsulfinyl, or alkylsulfonyl group, the alkyl moiety thereof having from 1 to 3 carbon atoms; or an alkylmercapto, alkylsulfinyl, or alkylsulfonyl group, wherein the alkyl moiety has from 1 to 3 carbon atoms, and
R_2 is an alkoxy group of from 1 to 3 carbon atoms, or a pharmacologically acceptable acid addition salt thereof.

4,299,835

4-[(3-(4-QUINOLYL)PROPYL]PIPERIDINES, THEIR PREPARATION AND THEIR USE AS MEDICINES

Alain A. Champseix, Forges les Bains; Claude G. A. Gueremy, Houilles, and Gerard R. Le Fur, Villeneuve la Garenne, all of France, assignors to Pharmindustrie, Gennevilliers, France

Division of Ser. No. 968,718, Dec. 12, 1978, Pat. No. 4,237,139, which is a continuation-in-part of Ser. No. 806,418, Jun. 14, 1977, abandoned. This application Nov. 24, 1980, Ser. No. 210,084

Claims priority, application France, Jun. 18, 1976, 76 18555; Aug. 3, 1978, 78 22968

Int. Cl.^{3} A61K *31/47*

U.S. Cl. 424—258 **10 Claims**

1. A method of treating a mammal afflicted with an anxiety state comprising administering to said mammal a therapeutically effective amount of a composition comprising a compound of the formula:

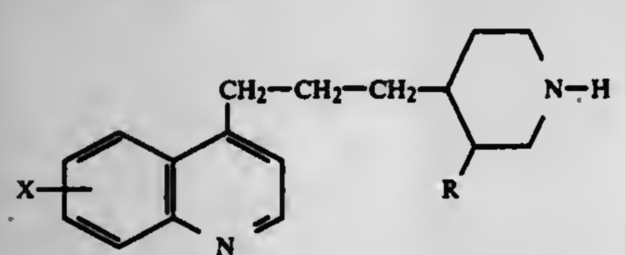

(I)

wherein R is hydrogen, alkyl having 1 to 4 carbon atoms or alkenyl having 2 to 4 carbon atoms; X is hydrogen or halogen, alkyl, alkoxy or alkylthio having 1 to 4 carbon atoms, trifluoromethyl, nitro, hydroxy, amino or amino substituted by one or two alkyl groups having 1 to 4 carbon atoms, by acyl having 1 to 4 carbon atoms or by alkylsulphonyl group having 1 to 4 carbon atoms, or a pharmaceutically acceptable salt thereof in a pharmaceutically acceptable carrier therefor.

4,299,836

NOVEL ERGOL-8-ENE AND ERGOLIN COMPOUNDS AND PROCESS FOR PREPARING SAME

Erzsebet Mago nee Karacsony; Lajos Toldy; Jozsef Borsy; Laszlo Tardos; Ildiko Kiraly, and Andras Ronay, all of Budapest, Hungary, assignors to Richter Gedeon Vegyeszeti Gyar Rt., Budapest, Hungary

Filed Jul. 10, 1980, Ser. No. 167,341

Claims priority, application Hungary, Jul. 12, 1979, GO 1452

Int. Cl.^{3} A61K *31/48;* **C07D** *457/02*

U.S. Cl. 424—261 **5 Claims**

1. New ergol-8-ene and ergoline derivatives of general formula /1/

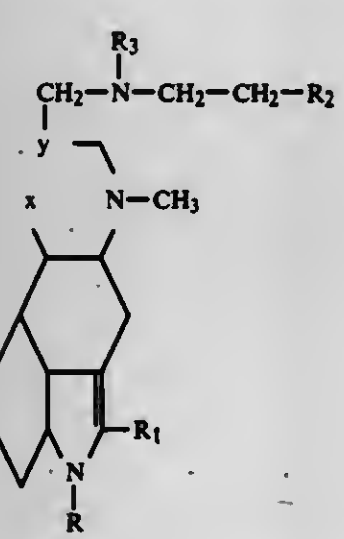

/1/

wherein

x y stands for —CH=C= or —CH_2—CH= group,

R stands for hydrogen atom or methyl group,

R_1 stands for hydrogen or halogen atom,

R_2 stands for lower alkylsulfonyloxy group, phenylsulfonyloxy group optionally substituted with a lower alkyl group, or azido group,

R_3 stands for lower alkylsulfonyloxy group or phenylsulfonyloxy group optionally substituted with a lower alkyl group,

and acid addition salts thereof.

5. A pharmaceutical composition for dopamine receptor stimulant activity which comprises a pharmaceutically acceptable carrier or diluent and an effective amount of at least one compound of the formula I of claim 1.

4,299,837

ANTHELMINTIC BENZIMIDAZOLE-CARBAMATES

Paolo Piccardi, Milan; Giovanni Confalonieri, Monza; Lino Da Col, and Pier G. Ramella, both of Novara, all of Italy, assignors to Montedison S.p.A., Milan, Italy

Continuation-in-part of Ser. No. 100,522, Dec. 5, 1979, abandoned. This application Jun. 3, 1980, Ser. No. 156,109

Int. Cl.^{3} C07D *235/32;* **A61K** *31/415*

U.S. Cl. 424—273 B **44 Claims**

1. A benzimidazole-carbamate substituted in position 5(6) and of the formula:

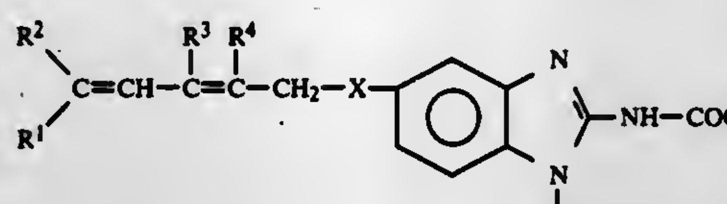

(I)

wherein:

R=C_1-C_4 alkyl,

R^1 and R^2 (like or unlike each other)=H, halogen, methyl optionally substituted by one or more halogen atoms,

R^3 and R^4 (like or unlike each other)=H, Cl, CH_3,

X=O, S, SO, SO_2, and mixed positional isomers thereof.

31. Method for fighting infestations due to helminthes in domestic and breeding animals, characterized in that an effective amount of a benzimidazole-carbamate of claim 1, or of a mixture of positional isomers thereof, either as such or in the form of a suitable composition, is administered to the animals to be treated.

4,299,838

TRYPTOPHAN DERIVATIVES HAVING AN INCREASED EFFECT ON THE CENTRAL NERVOUS SYSTEM

Jean P. Durlach, Paris, France, assignor to La Cooperation Pharmaceutique Francaise, France

Filed Feb. 17, 1978, Ser. No. 878,811

Claims priority, application France, Dec. 23, 1974, 74 42505

Int. Cl.^{3} A61K *31/405;* **C07D** *209/20*

U.S. Cl. 424—274 **4 Claims**

1. Method of relieving depression comprising the administration of an anti-depression amount of magnesium N-acetyl tryptophanate in the L(+) and/or DL form.

2. A depression relieving drug comprising as active substance magnesium N-acetyl tryptophanate in the L(+) and/or DL from associated with a suitable excipient for oral or parenteral administration.

4,299,839

NOVEL PESTICIDES AND PESTICIDAL COMPOSITIONS CYCLOPROPANECARBOXYLATES AND PESTICIDAL METHOD

Yoshiaki Omura, Okayama; Fumio Mori, Kurashiki; Yoshiji Fujita, Kurashiki; Takashi Nishida, Kurashiki; Takeo Hosogai, Kurashiki; Sukeji Aihara, Kurashiki; Yoshin Tamai, Kurashiki; Fumio Wada, Fukuoka, and Kazuo Itoi, Kurashiki, all of Japan, assignors to Kuraray Co., Ltd., Kurashiki, Japan

Division of Ser. No. 923,542, Jul. 11, 1978. This application Sep. 26, 1979, Ser. No. 79,180

Int. Cl.^{3} A01N *53/00;* **C07C** *153/057;* **C07D** *307/52*

U.S. Cl. 424—274 **2 Claims**

1. A compound having the structural formula:

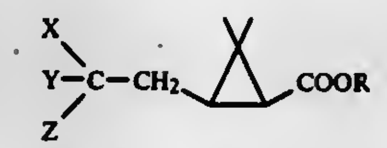

(I)

wherein X, Y and Z are the same or different and at least two of same are chlorine or bromine, with the remaining one being hydrogen, methyl, chlorine or bromine; R is an alcohol residue represented by one of the following structural formulae (II), (III) and (IV):

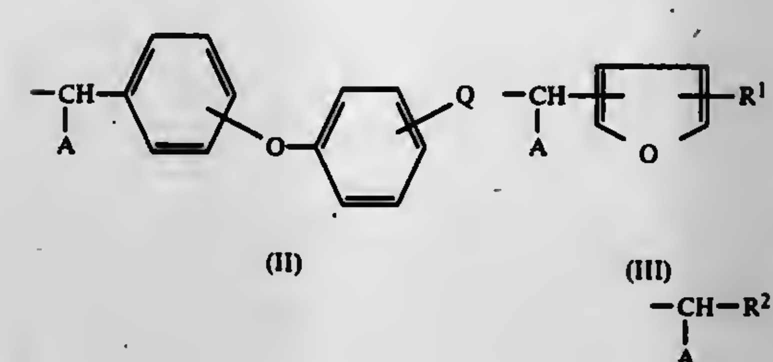

(II) (III) (IV)

where A is thiocarbamoyl; Q is hydrogen, chlorine, bromine, fluorine, methyl or trifluoromethyl; R^1 is propargyl or benzyl; and R^2 is 2-halogeno-3-phenyl-1-propen-1-yl, (dihalogenovinyloxy) phenyl, benzylphenyl, phthalimido, thiophthalimido, di- or tetrahydrophthalimido or dialkyleimido.

2. A method for the control of agricultural and horitcultural insects, forest insects, harvested crop insects, household insects, mites, and pests of the genera Tettigoniidae, Gryllidae, Gryllotalpidae, Blattidae, Reduviidae, Pyrrhocoridae, Cimicidae, Delphacidae, Aphididae, Diaspididae, Pseudococcidae, Scarabaeidae, Dermestidae, Coccinellidae, Tenebrionidae, Chrysomelidae, Bruchidae, Tineidae, Noctuidae, Lymantriidae, Pyralidae, Culicidae, Tipulidae, Stomoxydae, Trypetidae, Muscidae, Calliphoridae, Pulicidae, Tetranychidae and Dermanyssidae, which comprises applying to the habitat of such pests a pesticidally effective amount of a cyclopropanecarboxylate having the formula:

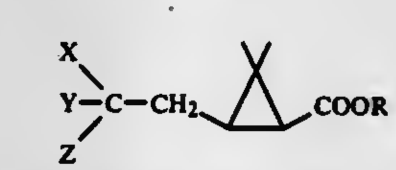

wherein X, Y and Z are the same or different and at least two of same are chlorine or bromine, with the remaining one being hydrogen, methyl, chlorine or bromine; R is an alcohol residue represented by one of the following structural formulae (II), (III) and (IV):

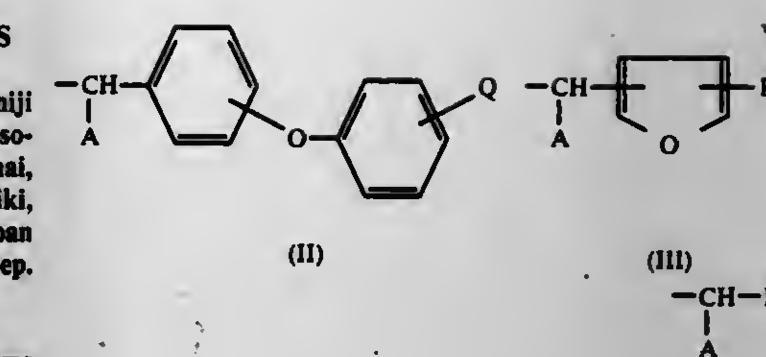

(II) (III) (IV)

where A is thiocarbamoyl; Q is hydrogen, chlorine, bromine, fluorine, methyl or trifluoromethyl; R^1 is propargyl or benzyl; and R^2 is 2-halogeno-3-phenyl-1-propen-1-yl, (dihalogenovinyloxy) phenyl, benzylphenyl, phthalimido, thiophthalimido, di- or tetrahydrophthalimido or dialkylmaleimido.

4,299,840

METHOD FOR REPELLING TICKS AND INSECTS

Wilfred A. Skinner, Portola Valley, Calif.; Ulrich Rosentreter, Wunstorf, Fed. Rep. of Germany, and Thomas E. Elward, Palo Alto, Calif., assignors to SRI International, Menlo Park, Calif.

Filed Jun. 9, 1980, Ser. No. 157,521

Int. Cl.^{3} A01N *43/36*

U.S. Cl. 424—274 **8 Claims**

1. A process for repelling ticks and other small biting insects from the human skin or the hide portions of domestic animals which comprises administering to said skin or hide portions a solution of an active compound selected from the group consisting of those having the formula:

I. Compounds of the formula

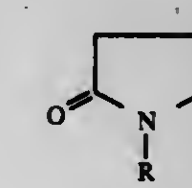

wherein R represents an alkyl group of from about 6 to 12 carbon atoms;

II. Compounds of the formula

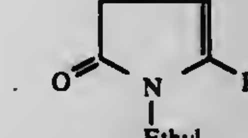

wherein R represents an alkyl group of from about 4 to 12 carbon atoms; and

III. Compounds of the formula

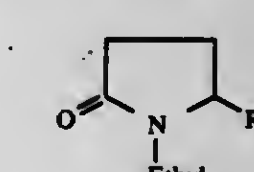

wherein R represents an alkyl group of from about 6 to 12 carbon atoms,

said solution being of such strength as to provide the treated skin or hide portions with from about 0.05 mg/cm^2 to about 1.0 mg/cm^2 of said active compound.

4,299,841

METHODS OF COMBATTING INSECTS AND ACARIDS

Quinton A. Geering, Cambridge, England, assignor to Fisons Limited, England

Continuation-in-part of Ser. No. 711,376, Aug. 3, 1976, abandoned. This application Oct. 10, 1979, Ser. No. 83,544

Claims priority, application United Kingdom, Aug. 14, 1975, 33835/75

Int. Cl.^{3} A01N *37/00, 43/16, 47/10, 57/00*

U.S. Cl. 424—282 **10 Claims**

1. A method of combatting insects or acarids at a locus infested or liable to be infested with them, which method comprises applying to the locus an insect or acarid combatting amount of:

(A) 2,2-dimethyl-1,3-benzodioxol-4-yl N-methylcarbamate; and

(B) 3,3-dimethyl-1-methylthio-2-butanone O-methylcarbamoyloxime,

the weight proportions of (A) to (B) being from 2:1 to 3:8 respectively.

4,299,842

GUAIACOL ESTERS OF MERCAPTOPROPIONIC ACID DERIVATIVES, PROCESS FOR PREPARING SAME AND THERAPEUTICAL COMPOSITIONS COMPRISING SUCH ESTERS

Claudio Cavazza, 47, Viale Shakespeare, 00144 Rome, Italy

Filed Dec. 14, 1979, Ser. No. 103,785

Claims priority, application Italy, Dec. 21, 1978, 52417 A/78

Int. Cl.^{3} A61K *31/265, 31/24;* **C07C** *153/09, 69/017*

U.S. Cl. 424—301 **22 Claims**

1. A guaiacol ester of a mercaptopropionic acid derivative, selected from the group represented by the general formulae (I) and (II)

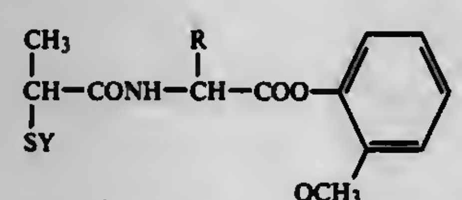

(I)

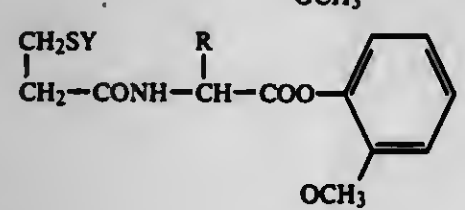

(II)

wherein:

R is selected from the group consisting of hydrogen and methyl; and

Y is selected from the group consisting of hydrogen and an alkanoyl aralkanoyl, or benzoyl radical.

20. A pharmaceutical composition comprising, as a therapeutically active component, an effective amount of one or more of the guaiacol esters of claim 1 for causing a mucolytic effect to occur in a human patient having a respiratory disease, and containing a pharmaceutically acceptable carrier.

4,299,843

STABILIZED CYANOHYDRIN ESTER

Charles H. Tieman, and Samuel B. Soloway, both of Modesto, Calif., assignors to Shell Oil Company, Houston, Tex.

Continuation-in-part of Ser. No. 10,292, Feb. 8, 1979, abandoned, which is a continuation-in-part of Ser. No. 891,773, Mar. 30, 1978, which is a continuation-in-part of Ser. No. 836,628, Sep. 26, 1977, abandoned. This application Oct. 5, 1979, Ser. No. 82,243

Int. Cl.^{3} A01N *37/34, 37/00*

U.S. Cl. 424—304 **29 Claims**

1. A pesticidal composition comprising an insecticidally effective amount of a non-racemic form of a cyanohydrin ester of the formula

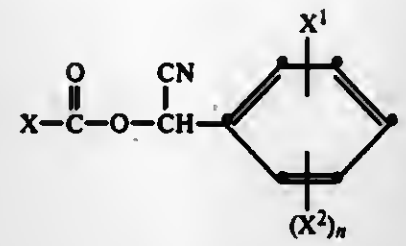

wherein X is

(a) a substituted benzyl group of the formula

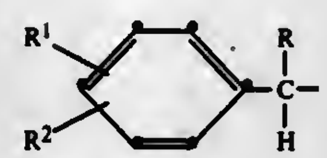

wherein R is an alkyl, cycloalkyl or alkenyl group containing up to 4 carbon atoms; R^1 is a hydrogen atom, a halogen atom having an atomic number of from 9 to 35, inclusive, an alkyl group containing from 1 to 4 carbon atoms or an alkoxy group containing from 1 to 2 carbon atoms, each optionally substituted by one or more halogen atoms having an atomic number of from 9 to 35, inclusive, and R^2 is a hydrogen atom or a methyl group, or

(b) a substituted cyclopropyl group of the formula

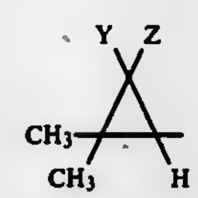

wherein Y and Z each is a halogen atom having an atomic number of from 9 to 35, inclusive, Y is a halogen atom, an isobutenyl group or a 2,2-dihalovinyl group in which each halo is a halogen atom having an atomic number of from 9 to 35, inclusive, and Z is a hydrogen atom; X^1 is phenoxy, benzyl or phenylthio, X^2 is a halogen atom having an atomic number of from 9 to 35, inclusive, or is methyl and n is 0, 1 or 2, which contains at least one asymmetric carbon atom in each of the acid and alcohol moieties, or a solution of the non-racemic ester in a solvent from an epimerization process or in an agriculturally acceptable solvent and a stabilizing amount of lower alkanoic acid to prevent epimerization of said ester.

4,299,844

2-ACYLOXY-4-(6-SUBSTITUTED-2-NAPHTHYL)BUTANES

Alexander C. Goudie, Harlow, England, assignor to Beecham Group Limited, England

Continuation of Ser. No. 792,724, May 2, 1977, abandoned. This application Jul. 9, 1979, Ser. No. 55,613

Claims priority, application United Kingdom, May 13, 1976, 19653/76; Oct. 1, 1976, 40937/76

Int. Cl.^{3} C07C *69/14, 69/614, 69/78, 69/92*

U.S. Cl. 424—308 **5 Claims**

1. A compound of the formula:

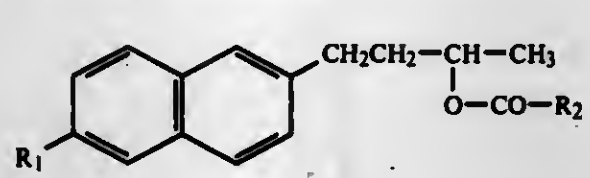

wherein

R_1 is chloro or methoxy and

R_2 is methyl, ethyl, benzyl, 2-methoxyethyl, phenyl, 4-methoxyphenyl or aminomethyl.

4,299,845

DERMATOLOGICAL COMPOSITIONS AND METHODS OF USE THEREFOR

David Loebenberg, Monsey, N.Y., and Elijah H. Gold, West Orange, N.J., assignors to Schering Corporation, Kenilworth, N.J.

Filed Apr. 14, 1980, Ser. No. 139,918

Int. Cl.^{3} A61K *31/165, 31/275*

U.S. Cl. 424—324 **26 Claims**

1. A topical composition for the treatment of dermatological disorders selected from the group consisting of acne, gram-positive bacterial infections and fungal infections comprising a therapeutically effective amount of a compound of the formula

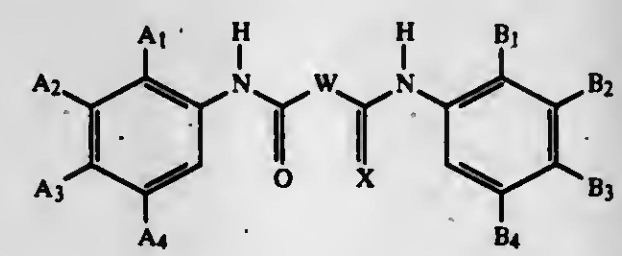

wherein

X is oxygen or sulfur;

W is a bridge group of the formula:

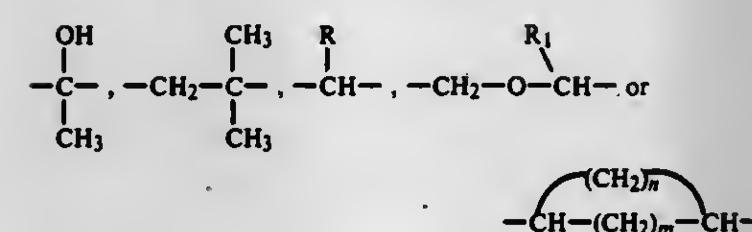

wherein R is hydrogen alkyl of 1 to 7 carbon atoms, cycloalkyl of 4–8 carbon atoms, cycloalkenyl of 5–8 carbon atoms, polyfluoroalkyl of 1–4 carbon atoms, phenyl, benzyl or alkoxycarbonylmethyl, R_1 is hydrogen or alkyl of 1 to 7 carbon atoms, m is 0–2, n is 1–4; with the proviso that $m+n$ is 3–5; and

A_1, A_2, A_3, A_4, B_1, B_2, B_3, and B_4 are independently selected from the group consisting of hydrogen, methyl, cyano, nitro, polyfluoroalkyl of 1–3 carbon atoms, chloro, bromo, fluoro and alkylthio, with the proviso that from 2 to 5 of these are hydrogen, of which at least one of A_1, A_2, A_3, and A_4 and at least one of B_1, B_2, B_3 and B_4 are hydrogen; in a vehicle suitable for topical administration.

4,299,846

DIHYDROXY-ACYLANTHRONES HAVING ANTI-PSORIATIC ACTIVITY

Kimmo K. Mustakallio, Helsinki; Aino K. Pippuri, Espoo, and Erkki J. Honkanen, Helsinki, all of Finland, assignors to Orion-yhtyma Oy, Finland

Filed Mar. 25, 1980, Ser. No. 133,772

Claims priority, application Finland, Mar. 29, 1979, 791058

Int. Cl.^{3} A61K *31/12;* **C07C** *50/18*

U.S. Cl. 424—331 **6 Claims**

1. A 1,8-dihydroxy-10-acyl-9-anthrone composition for use in the treatment of psoriasis comprising a compound of the formula

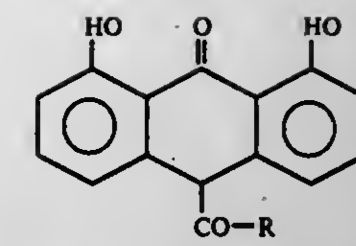

where R represents an alkyl group containing 2–4 carbon atoms and a pharmaceutically acceptable carrier.

4,299,847

PROCESS FOR TREATING CEREAL GRAINS

William F. Morris, 3112 Bagley Ave., Los Angeles, Calif. 90034

Continuation-in-part of Ser. No. 60,653, Jul. 25, 1979, abandoned, which is a continuation-in-part of Ser. No. 878,684, Feb. 17, 1978, abandoned. This application Aug. 18, 1980, Ser. No. 179,369

Int. Cl.^{3} A23L *1/10*

U.S. Cl. 426—18 **10 Claims**

1. A method of treating cereal grain intended for use in the preparation of consumable products, which comprises:

forming an initial soaking mixture containing water, cereal grain and a member selected from the group consisting of (a) liquid grape concentrate and (b) crystalline fructose, said cereal grain being present in an amount from about 40 to about 60 wt.%, said liquid grape concentrate having a solids content from about 60 to about 75 wt.% and being present in an amount from about 3 to about 8 wt.%, said crystalline fructose being present in an amount from about 0.55 to about 0.85 wt.%, and said water being present in an amount to make 100 wt.%;

maintaining said initial soaking mixture at a temperature from about 72° to about 84° F. for an initial soaking period of about 10 to about 16 hours;

adding proteolytic enzyme to said initial soaking mixture upon completion of said initial soaking period to define a final soaking mixture and maintaining said final soaking mixture at a temperature from about 72° to about 84° F. for a final soaking period of about 10 to about 62 hours, said proteolytic enzyme being a member selected from the group consisting of (a) bromelin and (b) papain, said bromelin having an enzyme potency of about 1,400 to about 1,600 gelatin digestive units per gram and being present in the final soaking mixture in an amount from about 0.016 to about 0.024 wt.% and said papain having an enzyme potency of about 2,800 to about 3,000 gelatin digestive units per gram and being present in the final soaking mixture in an amount from about 0.008 to about 0.012 wt.%; and

separating said cereal grain from said final soaking mixture.

4,299,848

MODIFIED ENZYME SYSTEM TO INHIBIT BREAD FIRMING METHOD FOR PREPARING SAME AND USE OF SAME IN BREAD AND OTHER BAKERY PRODUCTS

Vincent A. De Stefanis, White Plains, and Earl W. Turner, Port Chester, both of N.Y., assignors to International Telephone and Telegraph Corporation, New York, N.Y.

Filed Jun. 8, 1979, Ser. No. 46,876

Int. Cl.^{3} A21D *2/08;* **C12N** *9/28, 9/99*

U.S. Cl. 426—20 **48 Claims**

1. A method comprising the steps of:

providing a solution of alpha-amylase enzyme and protease enzyme;

adjusting the solution with about 0.0006 M calcium sulphate and about 0.8 M sodium chloride to a pH of about 6.5;

heating the solution to about 75° C.;

adding to the solution from 1–3% wheat starch and the mixture adjusted to a pH of about 6.5; and

holding the solution from 15–30 minutes to inactivate the protease enzyme activity.

2. A method comprising the steps of:
providing an alpha-amylase enzyme free of protease activity; and
adding the alpha-amylase to chlorinated tap water in the presence of at least 2.0–5.0% wheat flour.

4. A method for the introduction of alpha-amylase to chlorinated tap water comprising the step of:
adding the alpha-amylase which is free of protease activity to the tap water in the presence of at least about 0.3 mg. of ferrous sulfate per 100 ml. water at a pH above about 6.50.

7. A method of inactivation of protease enzyme in a mixture comprising alpha-amylase enzyme and glycerol and water comprising the steps of:
adjusting the mixture to a pH from 7.50–9.50;
adjusting the ratios of glycerol to water from 6.0–1.0:1 by weight; and
heating the mixture to a temperature of from 92°–95° C. for a time sufficient to inactivate the protease enzyme.

41. A dough comprising in combination:
a predetermined amount of flour;
chlorinated tap water;
a predetermined amount of surfactant weighing not in excess of 2.0% of the weight of said predetermined amount of flour, wherein said surfactant is selected from the group consisting of sodium stearoyl-2-lactylate, calcium stearate, glycerol monostearate, calcium stearoyl-2-lactylate and succinylated monoglyceride; and
bacterial alpha-amylase completely free of detectable protease activity introduced to said dough in a predetermined amount not in excess of 150 DU per 800 grams of said predetermined amount of flour on a carrier comprising a portion of said flour wherein the amount of surfactant and alpha-amylase combined is sufficient to retard firming of the product made from said dough.

4,299,849
CELLULASE TREATMENT OF ORANGE MATERIAL
Takenori Mouri, Toyonaka, and Hiroyuki Kayama, Osaka, both of Japan, assignors to Toyo Seikan Kaisha Limited, Japan
Filed Apr. 30, 1979, Ser. No. 34,953
Claims priority, application Japan, Jun. 14, 1978, 53/70760
Int. Cl.³ A23L *2/06*
U.S. Cl. 426—51 1 Claim

1. A process for producing orange juice which comprises steaming and crushing a whole orange or its rind, adding to the crushed material a cellulase enzyme produced by *Trichoderma viride* or a cellulase enzyme produced by *Aspergillus niger*, to form a mixture,
said enzymes being free from those components having the activity of disintegrating the flavedo layer and said enzymes having the property that when fractionated by elution at a pH between 8 and 12, no enzyme component having the activity of disintegrating plant tissues is eluted,
reacting said mixture at a temperature of 30° to 55° C., deactivating the enzyme, filtering the reaction mixture and separating the residue.

4,299,850
PACKAGE FOR FRAGILE FOOD ITEMS
Fred L. Wallen, Appleton, Wis., and Edward Huxel, Chatsworth, Calif., assignors to American Can Company, Greenwich, Conn.
Filed Jan. 14, 1980, Ser. No. 140,239
Int. Cl.³ B65B *23/00*
U.S. Cl. 426—124 9 Claims

1. A package for protecting fragile items of food against damage in commerce comprising, in combination, a tray and a plurality of generally U-shaped, crisp, relatively thin pastry units, each unit defining a first wing and a spaced second wing joined by a contiguous web, said tray being formed with both a cut-out portion comprising an integral saddle including panels and a return bend portion comprising a retaining wall and a top wall defining a slot, a plurality of said units being nested so that one unit is received snuggly within another with its external surface being received within and in contact with the internal surface of the next outermost unit, said nested units being positioned on said tray so that corresponding first wings of the innermost nested units are received within said slot projecting toward said retaining wall while the web of the outermost unit is in resilient contact with said saddle with said

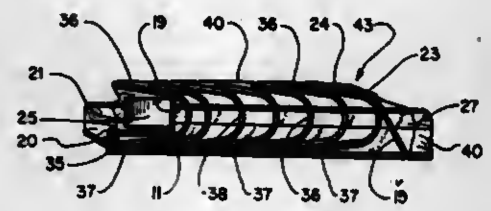

panels contacting the outer surface of the second wing of the outermost unit, said tray including a spacer attached to said return bend portion and nested within the space between spaced wings on the innermost unit to provide resistance to a crushing load, said tray and the nested units being enclosed in a plastic film such that said units are fixed to and supported by said tray.

4,299,851
FLAVORING DISPENSER
Henry E. Lowe, 21725 Allegheny St., Cassopolis, Mich. 49031
Filed Feb. 1, 1980, Ser. No. 117,773
Int. Cl.³ B65D *81/34*
U.S. Cl. 426—132 4 Claims

1. A flavoring dispenser comprising a body structured for placing on top of food being cooked and capable of forcibly dispensing flavoring substances onto the food during cooking, said body having upper and lower layers of aluminum foil sealed to each other near the edges of one of said upper and lower layers defining a cavity therebetween, said cavity being capable of receiving moisture and heat for increasing the pressure in said cavity, a flavoring substance disposed in said cavity, the upper layer defining the cavity being imperforate, the lower layer defining the cavity having a plurality of apertures through which heat and moisture may enter said cavity, said flavoring substance being capable of flowing downwardly through said apertures and onto the food during the cooking of the food, and a foil flange joined integrally with the other of said upper and lower layers and extending outwardly from said edges of said body and be capable of conforming to and at least partially enclosing the food being cooked.

4,299,852
PROCESS FOR THE PREPARATION OF BOTULINAL RESISTANT MEAT PRODUCTS
Ryuzo Ueno, Nishinomiya; Toshio Matsuda, Itami; Tatsuo Kanayama, Takarazuka; Kunihiko Tomiyasu; Yatsuka Fujita, both of Nishinomiya, and Shigeo Inamine, Kobe, all of Japan, assignors to Kabushiki Kaishaveno Seiyakuoyo Kenkyojo, Osaka, Japan
Filed May 16, 1980, Ser. No. 150,663
Claims priority, application Japan, Sep. 12, 1979, 54-116102
Int. Cl.³ A23B *4/00*
U.S. Cl. 426—266 13 Claims

1. A process for the preparation of botulinal-resistant meat products, which comprises adding to the starting meat sorbic acid or potassium sorbate, at least one glycerol monoester of C_{10}- or C_{12}-fatty acid in a total amount which will not make the meat product unpalatable, and the minimum amount necessary, for the product's color development, of a nitrous acid compound.

4,299,853
BIOLOGICAL PRESERVATION OF BEER
John G. Kleyn, Seattle, Wash., assignor to Ben Schoorlemmer, a part interest
Continuation of Ser. No. 344,973, Mar. 26, 1973, abandoned, which is a continuation of Ser. No. 117,068, Feb. 18, 1971, abandoned. This application Jul. 7, 1976, Ser. No. 703,274
Int. Cl.³ C12H *1/14*; C12K *1/04*
U.S. Cl. 426—271 6 Claims

1. The method of biologically preserving a non-pasteurized, fully attenuated beer, i.e., beer which is substantially free of residual fermentable sugars and contains residual sugars normally sustaining the growth of wild yeasts, thereby forming sediment on storage, the steps which include determining the *S. diastaticus* cell population of the production beer prior to packaging; maintaining the production beer at a temperature of about 32° F. for a finite time; introducing an aqueous solution including EDTA into the production beer at about said maintained temperature and in amount sufficient to biologically stabilize the beer; and thereafter packaging the biologically stabilized beer; said introduced amount of EDTA being correlated with the cell population of *S. diastaticus* in the production beer and in amount sufficient to inhibit growth of *S. diastaticus*, thereby inhibiting sediment due to wild yeast growth in package beer during a shelf life of at least 2 to 3 months.

4,299,854
GRAIN PROCESSING TO INHIBIT MOLD GROWTH
Elmer F. Glabe, Northbrook; Perry W. Anderson, Niles, and Stergios Laftsidis, Chicago, all of Ill., assignors to Food Technology Products, Chicago, Ill.
Continuation of Ser. No. 884,756, Mar. 9, 1978, abandoned, which is a continuation-in-part of Ser. No. 676,247, Apr. 12, 1976, abandoned, which is a continuation of Ser. No. 484,461, Jul. 1, 1974, abandoned, which is a continuation of Ser. No. 350,346, Apr. 12, 1973, abandoned, which is a continuation-in-part of Ser. No. 158,616, Jun. 30, 1971, abandoned. This application Jun. 30, 1980, Ser. No. 164,826
Int. Cl.³ A23L *9/00*
U.S. Cl. 426—331 9 Claims

1. A process for inhibiting mold growth in kernels of a cereal grain having a seed coat which consists essentially of contacting said kernels in the presence of the natural moisture contained therein without artificial drying with sodium diacetate uniformly distributed on the surface of said kernels at ambient temperatures and allowing the said kernels of cereal grain to remain in contact with said sodium diacetate until the sodium diacetate penetrates the seed coat, the amount of sodium diacetate being sufficient to inhibit mold growth in said cereal grain, and storing said cereal grain so treated without artificial drying, thereby preserving the natural moisture.

4,299,855
METHOD OF PRODUCING A CHEESE PRODUCT IN SNACK-SIZED FORM
Takanori Wada, Machida; Hitoshi Sano, Sayama; Shigekatsu Sato; Yukihiro Saiki, both of Hidaka; Keisuke Shimizu, Arajuku; Masanori Hirata, Tachikawa; Junichi Naka, Matsudo; Takayoshi Takahashi, Machida; Toshiaki Ishii, and Toshikazu Kamiki, both of Higashimurayama, all of Japan, assignors to Snow Brand Milk Products Co. Ltd., Sapporo, Japan
Filed Feb. 29, 1980, Ser. No. 125,836
Claims priority, application Japan, Mar. 20, 1979, 54-31753
Int. Cl.³ A23C *19/00*
U.S. Cl. 426—512 2 Claims

1. A method of producing a cheese product in snack-sized form from molten cheese, said method comprising the steps of:
cooling the molten cheese to a temperature of about 45° C. to 35° C. in accordance with a moisture content of the molten cheese ranging from about 40% to 50%;
heating the surface area of the cooled cheese to a temperature of about 52° C. to 39° C. while maintaining the central portion of the cooled cheese at a temperature of about 45° C. to 35° C.;
cutting the heated cheese into snack-sized pieces;
and forming each of the snack-sized pieces of continuously rolling them within a mold die for forming them into a rounded shape without corners,

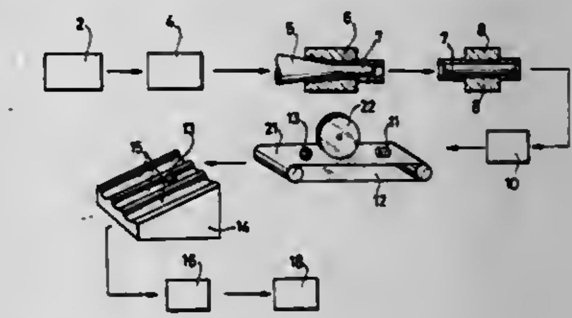

said method being characterized in that the surface area extending in the radial direction from the surface of the cheese to a thickness of ⅓ to 1/6 of the cheese diameter is heated to a temperature of about 52° C. to 39° C. wherein the snack-sized pieces are formed by the continuous rolling within a mold die and provides a uniformed texture and/or a smooth surface and a desirable, rounded shape that is in accordance with a shape of the cross section of the mold, said snack-sized pieces being formed without creases, cracks and/or voids on the surface thereof.

4,299,856
METHOD FOR PREPARING A SUSPENSION SALAD DRESSING OR JUICE PRODUCT
Richard Zirbel, Bedford County, Va., assignor to Wm. B. Reily & Company, Inc., New Orleans, La.
Filed Jan. 9, 1980, Ser. No. 110,594
Int. Cl.³ A23L *1/24*
U.S. Cl. 426—573 21 Claims

1. A method for preparing an edible suspension wherein particulate ingredients are indefinitely suspended without the need for stirring to maintain uniform dispersion of said ingredients, said edible suspension including the following ingredients in weight percent:
Water: 63 to 75
5% to 10% weak acetic acid solution: 12 to 25
Dextrose: 4 to 10
Salt: 1.6 to 2
Thickening agent: 0.40 to 0.67
Dry flavorings: 0.4 to 4.0,
wherein the method comprises:
combining about one-half of the water with the 5% and 10% weak acetic acid solution,
adding a buffering agent to the diluted solution sufficient to elevate its pH value above 3.5,
separately mixing and blending the dextrose, thickening agent, and dry flavorings together,
thereafter heating the diluted and buffered acetic acid solution from ambient temperature up to approximately 88° C. (190° F.),
gradually adding the dry ingredients into the heating solution while the solution passes through the temperature range of between about 49° C. (120° F.) to about 71° C. (160° F.),
simultaneously agitating the mixture while heating to prevent ingredient coagulation, and
thereafter cooling the mixture down to an ambient temperature in approximately 1 to 2 hours by adding the other half of the water while simultaneously stirring the cooling mixture.

4,299,857

METHOD FOR PRODUCING CORN MASA

Ralph E. Velasco, Jr., Rte. 4, Box 4116, Boerne, Tex. 78006
Continuation-in-part of Ser. No. 966,812, Dec. 6, 1978, Pat. No. 4,205,601. This application Apr. 21, 1980, Ser. No. 132,289
Int. Cl.[3] A23L *1/01*

U.S. Cl. 426—618 4 Claims

1. A method for producing masa comprising:
a. placing a mixture of corn, water, and calcium hydroxide in a container,
b. heating said mixture to a temperature in the range of 200° to 212° Fahrenheit,
c. steeping said mixture for a period of time,
d. first, injecting air for a first short period of time into said mixture through a first series of openings encircling a bottom center of said container to insure uniform cooling of said mixture,
e. second, injecting air for a second short period of time into said mixture through a second series of openings encircling said bottom center of said container, said second series of openings being spaced apart from said first series of openings, said first and second injecting steps being in a sequential manner causing said corn to roll over during said steeping step, and
f. periodically repeating said first and second injecting steps during said steeping step to maintain a uniform temperature to produce a masa which is ready for milling and processing.

4,299,858

PROTEINS CONTAINING NUTRITIOUS MATERIALS AND FOOD COMPOSITIONS CONTAINING SUCH NUTRITIOUS MATERIALS

Jean P. Aubert; Francis Gasser, both of Paris, and Robert Longin, Meudon La Foret, all of France, assignors to Institut Pasteur, Paris, France
Filed Sep. 29, 1975, Ser. No. 617,703
Claims priority, application France, Sep. 30, 1974, 74 32889
Int. Cl.[3] A23K *1/00*

U.S. Cl. 426—656 47 Claims

1. A process for obtaining an animal food material which comprises exposing the cells of a culture of osmosensitive microorganisms to a medium of low osmotic pressure to cause the rupture of the cell walls of said osmosensitive microorganisms.

4,299,859

THIN COAT TEMPERATURE COMPENSATED RESISTANCE OXIDE GAS SENSOR

Donald J. Romine, Fostoria, Ohio, assignor to Bendix Autolite Corporation, Fostoria, Ohio
Division of Ser. No. 7,134, Jan. 29, 1979, Pat. No. 4,234,542. This application Apr. 2, 1980, Ser. No. 137,093
Int. Cl.[3] B05D *1/08*

U.S. Cl. 427—34 5 Claims

1. In a method of forming a temperature compensated electrical oxygen sensing element having an insulating ceramic support with a first, second and third electrode disposed in spaced relation on the surface of the ceramic support that is to be exposed to the exhaust gas, the improvement comprising:
(a) applying a template or the like so as to mask a first part of said surface, said first part including the third electrode and a portion of the second electrode, such that a second part of said surface including the first electrode and the other portion of the second electrode remains unmasked;
(b) applying to said second part of the surface by a hot thin-layer technique a layer of a first resistive ceramic oxide material, the resistance of said material varying only as a function of temperature;
(c) removing said template so that both the first and second parts of said surface are unmasked; and
(d) applying to said first and second parts of said surface a layer of a second resistive ceramic material, the resistance of said material varying as a function of temperature and

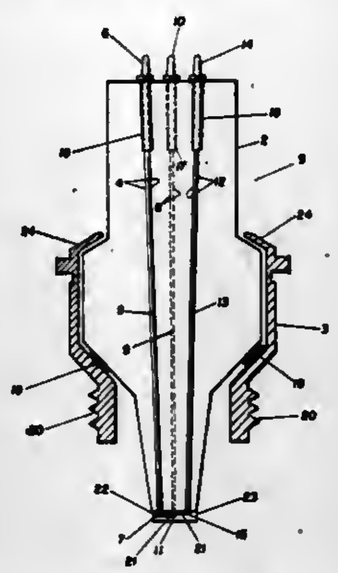

the partial pressure of oxygen in the gas to which it is exposed.

4,299,860

SURFACE HARDENING BY PARTICLE INJECTION INTO LASER MELTED SURFACE

Robert J. Schaefer, Springfield; Jack D. Ayers, Oakton, both of Va., and Thomas R. Tucker, Worthington, Ohio, assignors to The United States of America as represented by the Secretary of the Navy, Washington, D.C.
Filed Sep. 8, 1980, Ser. No. 185,039
Int. Cl.[3] B05D *3/06*

U.S. Cl. 427—53.1 18 Claims

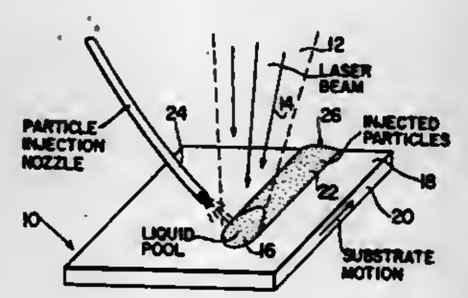

1. A method of providing a wear resistant-coating on a metal substrate comprising:
liquifying a surface portion of the metal substrate by a relatively moving laser beam;
forcibly injecting wear resistant particles into the liquid metal substantially out of the influence of the laser beam;
allowing the liquid metal to solidify thereby trapping the wear-resistant particles embedded therein.

4,299,861

PROCESS FOR THE PRODUCTION OF A FLEXIBLE SUPERCONDUCTOR

Manfred Dietrich, Bruchsal; Helmut Wühl, Karlsruhe; Erich Fitzer, Karlsruhe; Karl Brennfleck, Karlsruhe, and Dietrich Kehr, Bibertal, all of Fed. Rep. of Germany, assignors to Kernforschungszentrum Karlsruhe Gesellschaft mit beschränkter Haftung, Karlsruhe, Fed. Rep. of Germany
Filed Dec. 31, 1979, Ser. No. 108,464
Claims priority, application Fed. Rep. of Germany, Dec. 30, 1978, 2856885
Int. Cl.[3] B05D *5/12*

U.S. Cl. 427—62 15 Claims

1. A process for the production of a flexible superconductor comprising a carbon fiber having thereon a thin layer of a compound of the formula NbC_xN_y, wherein x is 0.05 to 0.40 and y is 0.60 to 0.90, and x+y has a maximum value of 0.90 to

1.0, and further comprising an external highly conductive metal layer, comprising the steps of:
(a) depositing a niobium layer in a fine-grained structural configuration on the surface of the carbon fiber, at a temperature of 250° C. to 650° C.;
(b) exposing the niobium-coated carbon fiber to a gaseous carbon-containing compound and a gaseous nitrogen-containing compound under pressures higher than or equal to atmospheric pressure, and subsequently raising the temperature of the exposed fiber and the carbon-containing compound and the nitrogen-containing compound, from the niobium-deposition temperature used in step (a) to a minimum temperature of about 600° C. and a maximum temperature of about 1200° C., to allow carbon and nitrogen to diffuse into the niobium layer, with the formation of niobium carbonitride; and
(c) applying to the niobium carbonitride layer, a layer of highly conductive metal, by electroless coating.

4,299,862

ETCHING WINDOWS IN THICK DIELECTRIC COATINGS OVERLYING SEMICONDUCTOR DEVICE SURFACES

William B. Donley, Kokomo, Ind., assignor to General Motors Corporation, Detroit, Mich.
Filed Nov. 28, 1979, Ser. No. 98,210
Int. Cl.[3] H01L *21/28*

U.S. Cl. 427—89 3 Claims

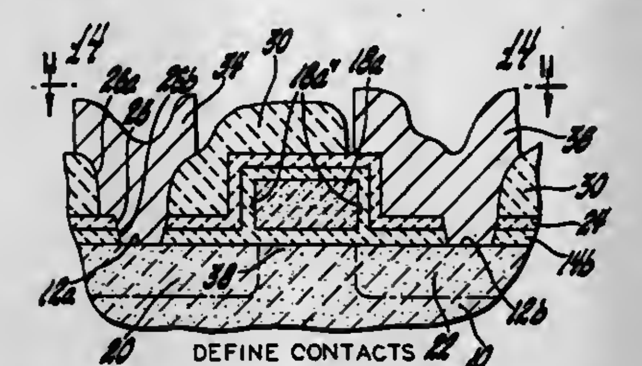

1. In a method of opening a contact window in a relatively thick glass coating on a semiconductor wafer surface over a semiconductor device region having a previously formed adjacent electrode, the improvement which includes depositing a thin silicon nitride coating over the device region and adjacent electrode before depositing the glass coating, opening a first window in the silicon nitride coating precisely registered for an intended electrical contact at least to said region, depositing said thick glass coating onto said silicon nitride coating, and then preferentially etching the glass coating to open a second contact window over the first contact window, whereby unintended lateral etching of said second window can occur without producing an unintended electrical contact to said previously formed electrode.

4,299,863

PRETREATMENT OF AN EPOXY RESIN SUBSTRATE FOR ELECTROLESS COPPER PLATING

Fumio Tanimoto, and Fumihiro Omori, both of Kyoto, Japan, assignors to Nippon Denki Kagaku Co., Inc., Kyoto, Japan
Continuation of Ser. No. 923,450, Jul. 10, 1978, abandoned. This application Dec. 13, 1979, Ser. No. 103,331
Claims priority, application Japan, Jul. 12, 1977, 52-84367
Int. Cl.[3] C23C *3/02*

U.S. Cl. 427—140 11 Claims

1. A method for the pretreatment of an epoxy substrate for electroless copper plating comprising the steps of subjecting the epoxy resin substrate to a treatment with an aqueous solution including ferric chloride and then immediately subjecting the substrate to a treatment with an aqueous solution of hydrogen peroxide without drying before sensitizing the epoxy resin substrate for electroless copper plating, said aqueous solution of hydrogen peroxide having a pH value between about 5 and about 10.

4,299,864

METHOD OF MAKING VISIBLE LIGHT TO FAR INFRARED TRANSDUCER

Vincent T. Bly, Alexandria, Va., assignor to The United States of America as represented by the Secretary of the Army, Washington, D.C.
Filed Feb. 28, 1980, Ser. No. 125,405
Int. Cl.[3] G02F *2/02*

U.S. Cl. 427—160 2 Claims

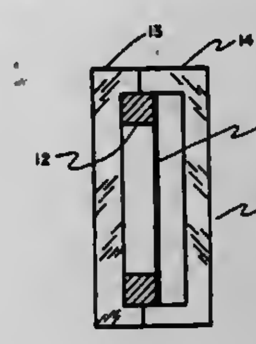

1. A method of making a visible-to-infrared transducer including the steps of
(a) preparing a thermally insulating film on the order of 500Å thick on a supporting structure;
(b) placing the film-structure combination in a soft inert vacuum with a trace of oxygen atmosphere;
(c) depositing onto said film while in said atmosphere a layer of a radiation absorber to a density on the order of 80×10^{-6} gm/cm^2;
(d) removing said combination from said atmosphere;
(e) mounting said combination in an air-tight housing; and (f) evacuating said housing.

4,299,865

ABRADABLE CERAMIC SEAL AND METHOD OF MAKING SAME

David L. Clingman, Carmel; John R. Cavanagh, Brownsburg; Berton Schechter, Indianapolis, and Kenneth R. Cross, Lebanon, all of Ind., assignors to General Motors Corporation, Detroit, Mich.
Division of Ser. No. 73,550, Sep. 6, 1979, Pat. No. 4,269,903. This application Jul. 28, 1980, Ser. No. 173,030
Int. Cl.[3] B05D *5/00, 1/38, 1/34*

U.S. Cl. 427—243 6 Claims

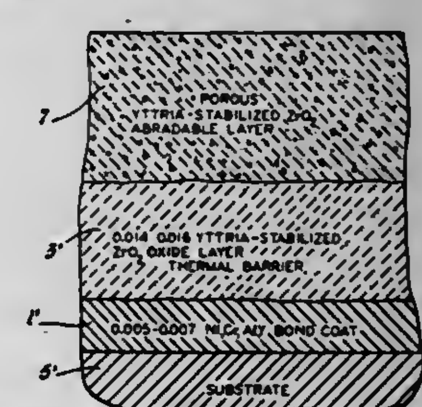

ABRADABLE THERMAL BARRIER COATING

1. In a method for forming a fluid seal abradable coating on one of a pair of members having relative rotational movement, said one member being the turbine engine casing having a thermal barrier coating of the stabilized zirconia type applied to a bond layer consisting essentially of a NiCrAly alloy covering said casing, the steps of codepositing heat softened, molten zirconia and an oxide from the group consisting of Y_2O_3, MgO

and CaO, and a thermally decomposable organic filler powder to form a layer of the desired depth on said thermal barrier coating, and heating said layer to an elevated temperature and for a time period as necessary to decompose said orgaic filler powder and produce a porous abradable layer having from about 20 to about 33% voids.

4. In a method for forming an abradable fluid seal porous coating adherent to the thermal barrier coating of the stabilized zirconia type provided on a bond layer consisting essentially of a NiCrAly alloy on the surface of a turbine engine casing, the steps of depositing on said thermal barrier coating a ceramic material consisting essentially of zirconia and an oxide from the group consisting of Y_2O_3, MgO and CaO, by passing said material in powder form through a depositing unit adapted to heat said material to the softening point and spray a stream thereof to enable plastic deformation of the material when deposited on said surface, codepositing a thermally decomposable organic filler powder with said ceramic material by feeding said organic filler powder into said ceramic material stream at a point downstream from the spray nozzle of said depositing unit so as to control the residence time of said organic filler powder in said ceramic material stream to prevent thermal decomposition prior to deposition on said surface, and heating said codeposited ceramic material and organic powder to decompose said organic powder and produce a porous abradable coating on said surface having from about 20 to about 33% voids.

4,299,866

COATING PROCESS MASK

Roger J. Clark, Jericho, and Robert E. Kennison, Essex, both of Vt., assignors to International Business Machines Corporation, Armonk, N.Y.

Filed Jul. 31, 1979, Ser. No. 62,377

Int. Cl.³ C23C *13/00*

U.S. Cl. 427—255.6 **8 Claims**

1. In a process for removing a polymer from a defined area on a body by masking the defined area on the body which is to be coated with a polymer the improvement comprising the steps of:

coating the defined area with a swellable, dissolvable, non-polymerizable hydrocarbon,

coating the body with a polymer,

applying an external force to said polymer coating over said defined area sufficient to create openings in said polymer coating over said defined area, and

immersing the body in a swelling agent for said swellable, dissolvable, non-polymerizable hydrocarbon that will penetrate said openings and swell and dissolve said hydrocarbon to rupture and remove the polymer from said defined area while leaving the remainder of the body coated with the polymer.

2. The process of claim 1 wherein said polymer is formed from a monomer vapor.

4,299,867

AMBIENT HYDROCURABLE COATING AND ADHESIVES COMPOSITIONS

William D. Emmons, Huntingdon Valley, and Wayne E. Feely, Rydal, both of Pa., assignors to Rohm and Haas Company, Philadelphia, Pa.

Filed Jan. 30, 1980, Ser. No. 116,734

Int. Cl.³ B05D *3/02*

U.S. Cl. 427—377 **7 Claims**

1. An ambient condition hydrocurable composition, suitable for coating and impregnating purposes, comprising a mixture of

(1) a soluble addition polymer containing a plurality of pendant groups containing a 2,2-dialkyl-oxazolidine or a 2,2-cycloalkyloxazolidine group and

(2) at least one polyethylenically unsaturated compound, monomeric or polymeric in character, having at least two unsaturated acryloxy groups,

the ratio of component (2) to component (1) being in the range of 0.2 to 3.5 equivalents of unsaturated acryloxy group in component (2) per equivalent of potential secondary amine nitrogen in component (1).

5. A method of applying a composition according to claim 1 which comprises the step of spreading the composition on a surface of a substrate to be coated, impregnated, or both, at ambient temperature and relative humidity whereupon the moisture in the atmosphere causes hydrolysis of the oxazolidine ring with liberation of a ketone and the conversion of the tertiary amine nitrogen of the ring to a secondary amine nitrogen and crosslinking of component (1) by Michael addition to the acryloxy groups in component (2) occurs at ambient temperature.

6. A method according to claim 5 wherein the ambient temperature cure is supplemented by a cure at elevated temperature up to about 70° C.

4,299,868

COATING COMPOSITIONS

Gerhard Berndt, Monheim; Eberhard König, Krooberg; Josef Pedain, Cologne; Wilhelm Thoma, and Walter Schröer, both of Leverkusen, all of Fed. Rep. of Germany, assignors to Bayer Aktiengesellschaft, Leverkusen, Fed. Rep. of Germany

Continuation of Ser. No. 22,392, Mar. 21, 1979, abandoned. This application Dec. 28, 1979, Ser. No. 108,105

Claims priority, application Fed. Rep. of Germany, Apr. 1, 1978, 2814079

Int. Cl.³ B05D *3/02*

U.S. Cl. 427—389.9 **10 Claims**

1. A coating composition which is a stable emulsion comprising:

(a) from about 50 to 95% by weight of an optionally branched prepolymer which is not dispersible in pure water containing from 2 to 8 terminal masked isocyanate groups and having an average molecular weight ($\overline{M}_n$) of from about 500 to 25,000 produced from a relatively high molecular weight polyhydroxyl compound and an excess of a polyisocyanate, followed by masking of the free NCO-groups,

(b) from about 2 to 20% by weight of an aliphatic and/or cycloaliphatic and/or aromatic amine containing at least two primary and/or secondary amino groups,

(c) from about 3 to 50% by weight of a stable aqueous polymer dispersion and/or aqueous polymer solution,

(d) from about 0 to 10% by weight of an organic solvent and

(e) from about 2 to 30% by weight of water, wherein the ratio of primary or secondary amino groups of component (b) to the masked isocyanate groups of component (a) is between about 1.1:1 to 0.7:1.

2. Coating compositions as claimed in claim 1 characterized in that component (a) is a prepolymer based on a polyether or polyester polyol having a molecular weight ($\overline{M}_n$) of from about 1000 to 4000 which contains from 2 to 4 terminal isocyanate groups masked by a ketoxime, and acetoacetic acid alkyl ester or a malonic acid dialkyl ester.

10. A process for coating substrates by applying a coating composition based on a polyurethane reactive system to the substrate by the direct or reverse coating process and hardening the coating thus applied with shaping or forming characterized in that the compositions claimed in claims 1 or 2 are used for coating and are hardened by heating the coated substrate to a temperature of from about 120° to 190° C.

4,299,869

PROTECTION OF SUBSTRATES AGAINST CORROSION

Harold V. Casson, Kingston; Grant G. Crabtree, Napanee; Bruno Kiedl, and Edward B. Noonan, both of Kingston, all of Canada, assignors to Huron Chemicals Limited, Ontario, Canada

Continuation-in-part of Ser. No. 827,411, Aug. 24, 1977, abandoned, which is a division of Ser. No. 748,437, Dec. 8, 1976, abandoned. This application Apr. 5, 1979, Ser. No. 27,436

Int. Cl.³ B65D *25/14;* **B32B** *15/14, 17/06*

U.S. Cl. 428—35 **15 Claims**

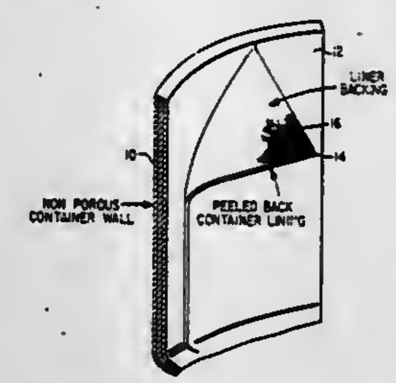

1. A corrosion-protective system comprising:

(1) a substrate which is susceptible to corrosion by action of a corrosive chemical-containing and gas-containing medium,

(2) an elastomeric coating which is resistant to the action of corrosive chemicals in said medium and which renders said substrate resistant to said corrosion, and of known gas permeability, the elastomer having a suitable viscosity in the uncured state to enable said elastomer to penetrate into a porous backing in a controlled manner,

(3) gas escape means provided for escape of gases permeating the coating, from between said coating and the supporting substrate, said means for escape of gases including a porous backing material upon which said elastomeric coating is coated, the coating serving to protect the substrate from the action of said corrosive chemicals in said medium, said backing material being adhesively secured to said substrate and serving to prevent a build up of gases between said coating and said substrate which would tend to dislodge the coating from the substrate, thereby to maintain the adhesion of said coating to said substrate; and said gas escape means rendering said coating resistant to disadherence or delamination; the combination of said elastomeric coating and gas escape means rendering said substrate resistant to said corrosion in spite of gases contained in said corrosive medium.

2. A corrosion-protective system comprising:

(1) a substrate which is susceptible to corrosion by the action of a corrosive chemical-containing and gas-generating medium,

(2) an elastomeric coating which is resistant to the action of corrosive chemicals in said medium and which renders said substrate resistant to said corrosion, and of known permeability of at least 10^{-4} ml./cm^2 cm. hr. atm. at room temperature for oxygen, and an elastomer viscosity (uncured) of 100-2000 poise,

(3) gas escape means provided for escape of gases permeating the coating, from between said coating and the supporting substrate, said means for escape of gases including a porous backing material upon which said elastomeric coating is coated, the coating serving to protect the substrate from the action of said corrosive chemicals in said medium, said backing material being adhesively secured to said substrate and serving to prevent a build up of gases between said coating and said substrate which would tend to dislodge the coating from the substrate, thereby to maintain the adhesion of said coating to said substrate; and said gas escape means rendering said coating resistant to disadherence or delamination; the combination of said elastomer coating (2) and gas escape means (3) rendering said substrate resistant to said corrosion in spite of gases contained in said corrosive medium, said elastomeric coating being applied to said porous backing material in a controlled way that the backing material is held mechanically by the coating and yet its porous body is substantially free from coating material so that 70 to 97% of the pores of the backing material remain open, to thereby form a laminate which is then adhered to said substrate by adhesive bonding means, said adhesive bonding means having a viscosity in the range of 1 to 200 poise and filling the remaining open pores of said porous backing material which are not filled with said elastomeric coating so that, after the elastomeric coating has been applied, 10 to 50% of the open pores of said porous backing material of said laminate remain open to the atmosphere.

14. In a vessel for electrolysis of sodium chloride for the production of sodium chlorate, the improvement which comprises all exposed surfaces of the vessel being coated with an elastomeric coating which is resistant to the action of corrosive chemicals in said medium and which renders said substrate resistant to said corrosion, and of known permeability of at leat 10^{-4} ml./cm^2 cm. hr. atm. at room temperature for oxygen, said coating being adhesively secured to the surface of the vessel; and gas escape means provided for escape of gases permeating the coating of the elastomer from between the coating and the surface of the vessel, said means for escape of gases including a porous backing material upon which said elastomeric coating is coated in a controlled manner, the coating serving to protect the substrate from the action of said corrosive chemicals in said medium, and said gas escape means rendering said coating resistant to disadherence or delamination; and serving to prevent a build up of gases between the coating and the vessel surface which would tend to dislodge the elastomeric coating from the surface of the vessel and thereby to maintain the adhesion of the coating to the surface of the vessel.

4,299,870

REUSABLE THEFT DETERRENT SECURITY TAG

David R. Humble, Coral Springs, Fla., assignor to Sensormatic Electronics Corporation, Deerfield Beach, Fla.

Filed May 27, 1980, Ser. No. 153,777

Int. Cl.³ A44B *21/00;* **B65D** *33/34;* **G09F** *3/12*

U.S. Cl. 428—101 **10 Claims**

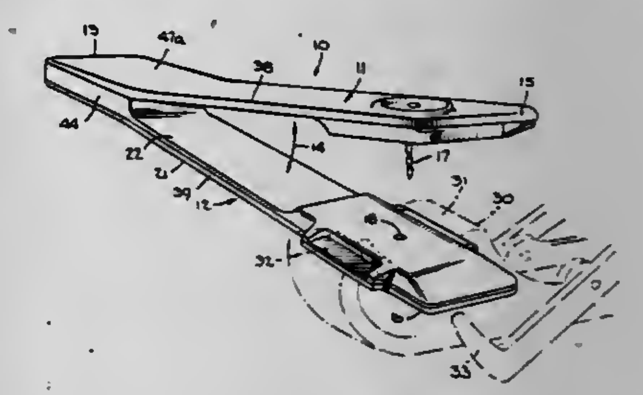

1. A reusable security tag comprising a spring-tong-like housing structure having two arms that are joined together at one end by a non mobile joint and constrained by such joint to extend divergently from said one end at a predetermined acute angle which angle is maintained in the absence of any flexing of said arms; said structure being constructed and arranged to be resiliently deflectable through such flexing of at least one of said arms to permit the free ends of said arms to be brought together under direct manual pressure, the free end of one of said arms carrying a tack shank and the free end of the other arm carrying clutch lock means for receiving and gripping said tack shank, said clutch lock means being concealed within a hollow cavity in said other arm but manipulable by a mechanical aid acting by way of the walls of said housing structure to

release said tack shank, and a device that is automatically detectable when present in a surveillance zone enclosed within one of said arms of said housing structure.

4,299,871
STITCH BOND FASTENING OF COMPOSITE STRUCTURES

Hans H. Forsch, Northport, N.Y., assignor to Grumman Aerospace Corporation, Bethpage, N.Y.
PCT No. PCT/US79/00240, § 371 Date Sep. 4, 1979, § 102(e) Date Sep. 4, 1979, PCT Pub. No. WO80/02254, PCT Pub. Date Oct. 30, 1980.
PCT Filed Apr. 16, 1979, Ser. No. 72,259
Int. Cl.³ B32B *7/08*; B64C *3/26*
U.S. Cl. 428—104 14 Claims

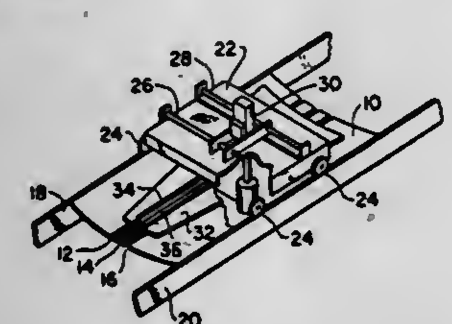

1. In a structural assembly a means of joining the various elements that will optimize the absorption of joint loading, said assembly comprising:
a composite panel;
a composite beam cap;
a bonding means to localize the cap on the panel; and
stitching from one side of the panel through the panel and beam cap to the exterior thereof and returning through the beam cap and panel and continuing in like fashion along a line with said stitching reinforcing the bonding means to accommodate joint loadings directionally destructive to the bonding means to complete the assembly.

4,299,872
INTUMESCENT MATERIAL-HONEYCOMB THERMAL BARRIER

Anthony S. Mignel, Leucadia; John L. Perry, El Toro, and Gary R. Wittman, Costa Mesa, all of Calif., assignors to The United States of America as represented by the Secretary of the Navy, Washington, D.C.
Continuation-in-part of Ser. No. 833,851, Sep. 16, 1977, abandoned. This application Sep. 21, 1979, Ser. No. 77,689
Int. Cl.³ B32B *3/12*
U.S. Cl. 428—117 3 Claims

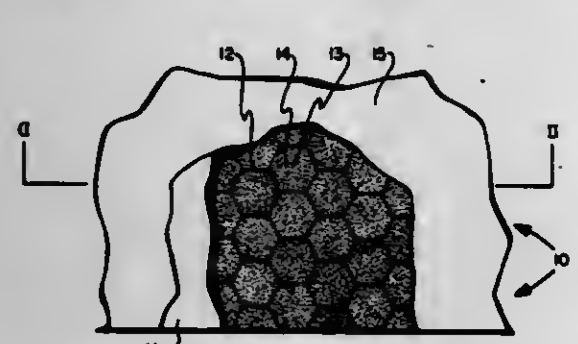

1. A thermal barrier comprising:
a layer of fire-retardant honeycomb material having a plurality of open cells;
an exterior panel connected to said honeycomb material for closing the side of said honeycomb material expected to undergo a temperature increase; and
an intumescent insulating material partially filling said cells, said intumescent insulator bonded to said cells and against said exterior panel for decomposing into an expanded foam when heated, such that a fire-resistant layer filling said cells is formed and where said intumescent insulating material is selected from the group consisting of epoxy resin, vinyl resin, silicone resin, sodium silicate, silicone rubber, butyl rubber, magnesium oxide and magnesium chloride.

4,299,873
MULTILAYER CIRCUIT BOARD

Satoru Ogihara; Mitsuru Ura, and Yoshihiro Suzuki, all of Hitachi, Japan, assignors to Hitachi, Ltd., Tokyo, Japan
Filed Apr. 7, 1980, Ser. No. 138,073
Claims priority, application Japan, Apr. 6, 1979, 54/40954
Int. Cl.³ B32B *3/10*
U.S. Cl. 428—137 15 Claims

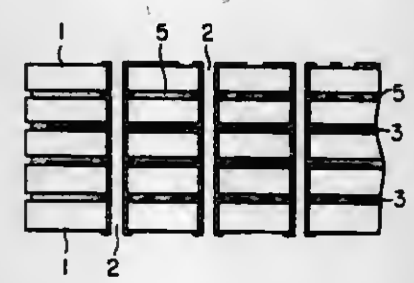

1. A multilayer circuit board obtained by laminating and bonding a plurality of ceramic substrates, each substrate having holes therein and a conductive circuit pattern on at least one surface thereof, and electrically insulative bonding layers between adjacent ceramic substrates, said bonding layers having good thermal conductivity and a larger coefficient of thermal expansion than that of the ceramic substrate.

4,299,874
REMOVABLE PAVEMENT-MARKING SHEET MATERIAL

David C. Jones, and Timothy D. Bredahl, both of Stillwater, Minn., assignors to Minnesota Mining and Manufacturing Company, St. Paul, Minn.
Filed Mar. 31, 1980, Ser. No. 135,281
Int. Cl.³ B32B *5/16, 27/12, 27/14*
U.S. Cl. 428—143 11 Claims

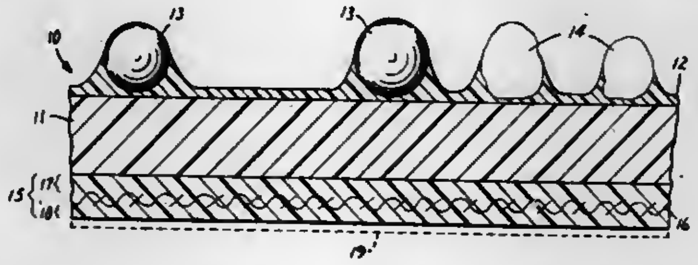

1. Pavement-marking sheet material that may be applied to a paved surface and then removed when the need for a marking has ended comprising
(1) a stretchable porous fibrous web comprising durable weather-resistant fibers that are distributed so as to extend in a plurality of directions and are separated on the average by no more than about 5 millimeters, said web exhibiting a trapezoid tearing strength in any direction of at least about 2 kilograms and an elongation of at least 20 percent before rupture;
(2) a polymeric layer disposed above the web and forming the exterior surface of the sheet material, said layer carrying retroreflective microspheres partially embedded in and partially protruding from the top surface of the layer; and
(3) a pressure-sensitive adhesive stratum at least 50 micrometers thick disposed below the fibrous web so as to form the exterior bottom surface of the sheet material and provide adhesion of the sheet material to a steel substrate in a 180° peel test of at least 0.2 kilogram per centimeter width of the sheet material; said sheet material having a tensile strength of at least 0.5 kilogram per centimeter width, and a residual force of less than about 1.5 kilograms per centimeter width when measured thirty minutes after being elongated 5 percent and then immediately relaxed 7.5 percent of the elongated amount.

4,299,875
FIRE RETARDANT PRINTED WOOD PANELING

Wallace A. Steele, High Point, N.C., assignor to The Lilly Company, High Point, N.C.
Division of Ser. No. 851,730, Nov. 15, 1977, Pat. No. 4,200,673. This application Aug. 20, 1979, Ser. No. 68,092
Int. Cl.³ B32B *3/30*
U.S. Cl. 428—151 5 Claims

1. A coated and printed wood paneling having an attractive grained appearance and characterized by greatly decreased flame spread rating comprising a panel core having a wood veneer surface, said wood surface being depressed in a relatively uniform pattern of depressed portions covering from about 20% up to about 70% of the surface area of the wood to a depth of at least about 0.01 inch, said depressed portions being filled with an intumescent fire retardant filler which is substantially removed from the undepressed wood surface, and the undepressed wood surface and the intumescent filler in said depressed portions being covered with a printed coating which provides an attractive grained appearance.

4,299,876
SOLDERABLE CONDUCTOR PATTERN

Donald Neuhoff, Colorado Springs, Colo.; Arthur H. Mones, Phoenix, and Kit M. Lam, Peoria, both of Ariz., assignors to Honeywell Information Systems Inc., Phoenix, Ariz.
Continuation-in-part of Ser. No. 942,727, Sep. 15, 1978, abandoned, which is a continuation-in-part of Ser. No. 861,225, Dec. 16, 1977, abandoned. This application Jun. 13, 1980, Ser. No. 159,336
Int. Cl.³ B32B *15/00*; H01B *1/02, 1/06*
U.S. Cl. 428—208 2 Claims

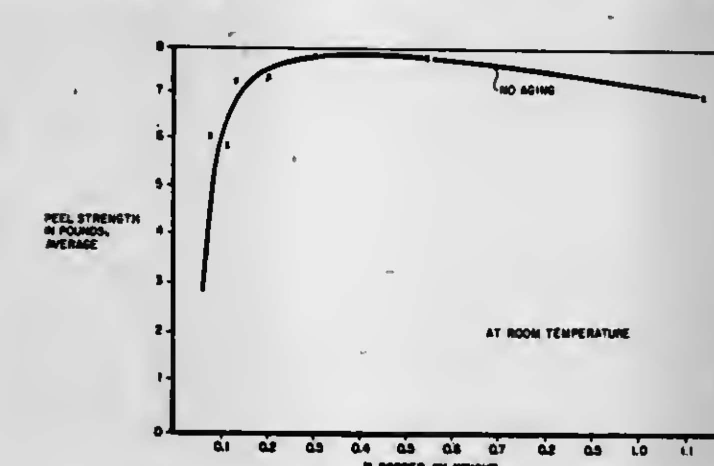

1. Fired conductor patterns which are adhered to a substrate and are solderable with a lead indium solder, said patterns having a composition by weight of 98.2 to 98.7% gold particles and 1.8 to 1.0% inorganic binder particles, the binder consisting essentially by total weight of gold and binder,
0.68 to 0.39% Cu_2O
0.35 to 0.24% PbF_2
0.34 to 0.23% CdO and the balance glass.

4,299,877
CLADDING AND METHOD OF MAKING SAME

Deane W. Smart, Auckland, New Zealand, assignor to Fletcher Wood Panels Limited, Auckland, New Zealand
Filed Oct. 22, 1979, Ser. No. 87,100
Claims priority, application New Zealand, Oct. 24, 1978, 188719
Int. Cl.³ B32B *5/16, 31/20*
U.S. Cl. 428—212 14 Claims

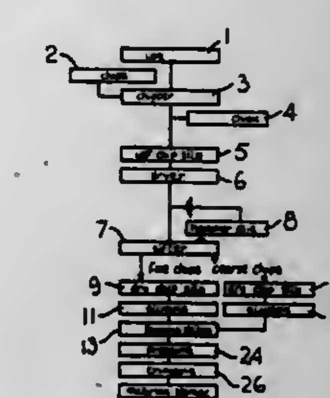

1. A method of manufacturing cladding, said method comprising the steps of making cellulosic material in the form of particles, in which about 20% to 30% of the particles comprise fine particles the remaining percentage comprising coarse particles having a thickness of 0.35 mm to 0.7 mm, adding a bonding resin to the cellulosic material, forming the cellulosic material into a mat, passing that mat to a hot press in a manner such that said coarse particles form a core between two layers of said fine particles, operating the press in a rapid manner such that the elapsed time between the initial contacting of the press platens with the mat until the cladding material so formed is of the required thickness is between 10 seconds and 25 seconds, said pressing operation maintaining between 10% and 30% of the core void, maintaining the press temperature at temperatures of the order of 180° to 240° C., maintaining the pressure and temperature for a sufficient time to cure the cladding and removing the wall board cladding from the press.

11. A cladding comprising cellulosic material in the form of particles of which about 20%-30% of the particles comprise fine particles and the remaining percentage comprise coarse particles having a thickness of 0.35 mm to 0.7 mm which coarse particles form a core between two layers of fine particles, said particles being bonded by bonding resin and the cladding being formed by the layers being pressed in a hot press at a temperature between 180° C. and 240° C. and the pressing pressures being arranged so that the wall board is pressed to its final thickness within 10 seconds to 25 seconds and such that said core has a void content between 10% and 30% of the volume thereof.

4,299,878
BIAS CUT, CONTINUOUS FABRIC OF CERAMIC OR SYNTHETIC FIBERS

Walter A. Rheaume, Fullerton, Calif., assignor to Textile Products Incorporated, Anaheim, Calif.
Filed Dec. 31, 1979, Ser. No. 108,582
Int. Cl.³ B32B *7/00*
U.S. Cl. 428—257 12 Claims

1. A lay flat, continuous length of fabric having a weave oriented at a bias to the direction of the fabric length, the fabric being produced by the steps, comprising:
(a) weaving a fabric selected from the class consisting of ceramic or synthetic fibers into a tubular shape having a square of rectangular weave pattern oriented at 90° to the fabric length;
(b) immediately and continuously following the weaving step, passing the tubular woven fabric through at least one pair of matched offset take up rolls driven by matched gears, the rolls having a one way grain in the direction of roll travel;
(c) applying a uniform take up pressure to opposite sides of the

tubular woven fabric by offset contact with a roll to an opposite side of the tube employing an equal roll force for sufficient surface contact of a respective roll circumference, thereby maintaining the 90° weave pattern uniform;

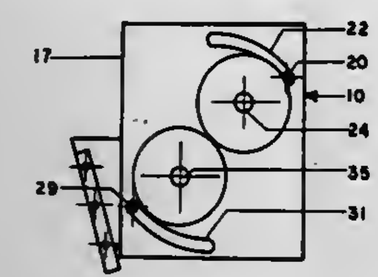

(d) cutting the tube diagonally to form a lay flat, continuous fabric having a uniform weave biased along its length; and,

(e) applying a removable adhesive backing sheet to the lay flat fabric to reduce weave distortion when applied to a substrate.

4,299,879

PROCESS FOR TREATING A TEXTILE MATERIAL

Eugene R. Martin, Onsted, Mich., assignor to SWS Silicones Corporation, Adrian, Mich.

Division of Ser. No. 74,188, Sep. 10, 1979. This application May 22, 1980, Ser. No. 152,251
Int. Cl.³ B32B *7/00*
U.S. Cl. 428—266 **10 Claims**

1. A process for treating a textile material which comprises coating a textile material with a composition containing a silylated polyether and thereafter drying the coated material at a temperature of from 50° to 200° C. in the presence of moisture, in which the silylated polyether is represented by the general formula:

$$\left[\begin{array}{l} CH_2(OC_nH_{2n})_xRA_b \\ | \\ CH(OC_nH_{2n})_xRA_c \\ | \\ CH_2(OC_nH_{2n})_xRA_d \end{array}\right]_a$$

wherein at least one R is selected from the group consisting of an -NH radical, an ammonium radical and a radical selected from the group consisting of

$$-O\overset{O}{\overset{\|}{C}}-R^1-\overset{O}{\overset{\|}{C}}-O^{\ominus} \text{ and } O\overset{O}{\overset{\|}{C}}-R^1-\overset{O}{\overset{\|}{C}}-$$

in which the radicals are linked to the polyether through a group selected from the class consisting of an ester, amine, amide and ammonium radical and the remaining R's are selected from the group consisting of hydroxyl, hydrocarbonoxy radicals having up to 18 carbon atoms and a radical of the formula

$$O-\overset{O}{\overset{\|}{C}}-R^1-\overset{O}{\overset{\|}{C}}OH,$$

R^1 is a divalent hydrocarbon radical selected from the group consisting of $(-CH_2)_y$, $-CH{=}CH-$ and a cyclic radical selected from the group consisting of C_6H_4, C_6H_8 and $C_{10}H_6$; A is a silicon containing radical selected from the group consisting of cationic and anionic radicals of the formula

$$\begin{array}{c} R_e^3 \\ | \\ R^4-SiSi(OR^2)_{3-e}, \end{array}$$

-continued

$$\begin{array}{c} R_e^3 \\ | \\ R^4SiO_{\frac{3-e}{2}} \end{array}$$

and nonionic radicals of the formula

$$\begin{array}{c} R_e^3 \\ | \\ R^5-Si(OR^2)_{3-e} \\ R_e^3 \\ | \\ R^5-SiO_{\frac{3-e}{2}}, \end{array}$$

in which R^2 and R^3 are monovalent hydrocarbon radicals having from 1 to 18 carbon atoms, R^4 is an ionic radical linked to a silicon atom consisting of carbon, hydrogen, oxygen and nitrogen atoms which is selected from the group consisting of

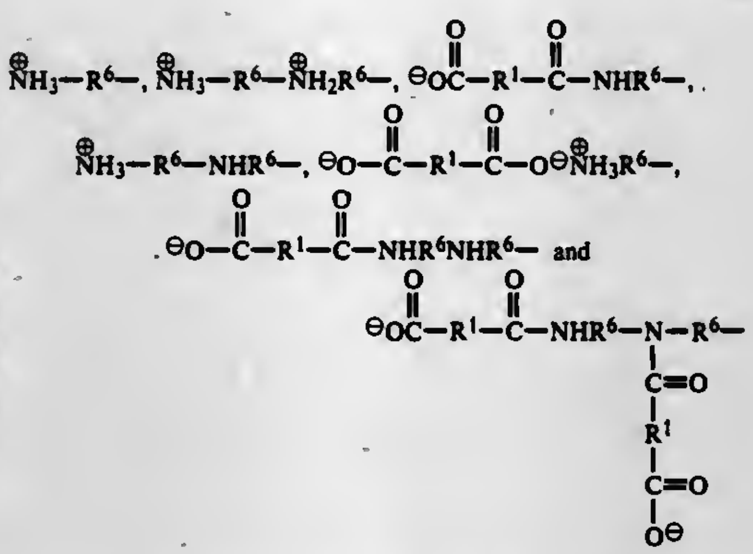

R^5 is a nonionic radical consisting of carbon, hydrogen, oxygen and nitrogen atoms which is selected from the group consisting of

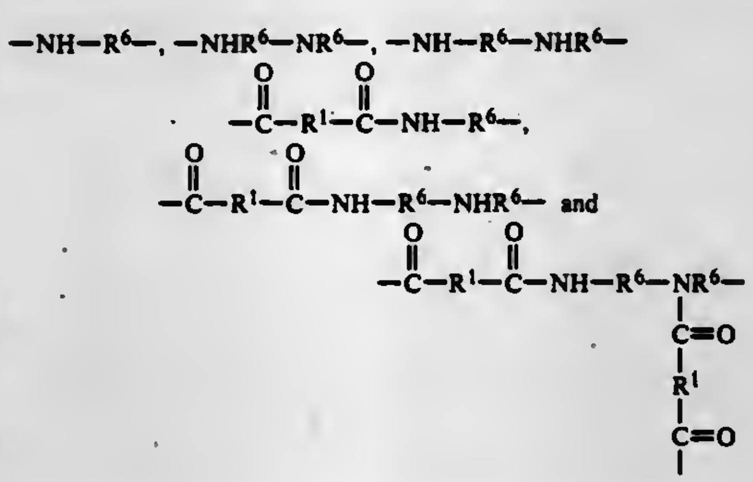

and when R is an —NH radical, R^5 may be a divalent radical, R^6 is a radical linked to a silicon atom having from 1 to 10 carbon atoms selected from the group consisting of a saturated divalent hydrocarbon radical, a divalent hydrocarbonoxy radical selected from the group consisting of $(C_2H_4O)_m(CH_2)_z$, $(C_3H_6O)_m(CH_2)_z$ and $(C_4H_8O)_m(CH_2)_z$, where m is from 1 to 50 and z is a number of from 1 to 10, and an unsaturated divalent hydrocarbon radical, in which the unsatisfied valences are linked to a silicon atom and the unsatisfied valences of A are satisfied by R and when A is a divalent radical, the ratio of A to R is 1:2 and when R is cationic, then A must be anionic and when R is anionic, then A must be cationic and when R is nonionic, then A must be nonionic, a is a number of from 0 to 4, b, c and d are each numbers of from 0 to 1 and the sum of b, c and d must be at least 1 and when b, c or d are 0, then R is selected from the group consisting of a hydroxyl, a hydrocarbonoxy radical and a radical of the formula

$$-O\overset{O}{\overset{\|}{C}}-R^1-\overset{O}{\overset{\|}{C}}-OH,$$

e is a number of 0 to 2, n is 2, 3 or 4, x is a number of at least 1 and up to 600 and y is a number of from 0 to 8.

4,299,880

DEMAND AND TIMED RENEWING IMAGING MEDIA

Robert P. Arens, North St. Paul, Minn., assignor to Minnesota Mining and Manufacturing Company, Saint Paul, Minn.

Filed Nov. 15, 1979, Ser. No. 94,645
Int. Cl.³ B41M *5/00;* G01D *15/34*
U.S. Cl. 428—304 **5 Claims**

1. A self-supporting sheet material which is substantially insensitive to marking by the localized application of heat or pressure but which is receptive to ink, pencil, crayon or similar markings and which is adapted to being temporarily or permanently provided with markings by the application of a colorless liquid, comprising in combination:

a. a self-supporting base sheet and,

b. bonded over at least one side of said base sheet, a reflective opaque white to pastel layer having an image force value of at least 500 grams-force and a cohesion value of at least 200 grams-force, said layer consisting essentially of particles which have a diameter in the range of 0.01 to 750 micrometers and a refractive index in the range of about 1.3 to 2.2, said particles being held in pseudo-sintered juxtaposition by a thermoset binder having a refractive index in the range of about 1.3 to 2.2 so that interconnected microvoids are present throughout said layer, the binder:particle volume ratio being in the range of about 1:20 to 2:3 and the void volume of said layer being in the range of 15–70%,

whereby when liquid having a refractive index approximating that of the particles is applied to the exposed surface of said layer, said liquid penetrates the microvoids, thereby reducing the reflectivity of the layer in the vicinity of the liquid-penetrated microvoids to impart transparency.

4,299,881

GRAPHITIC MOLDED ARTICLE WITH CORROSION-RESISTANT SURFACE LAYER STABLE UNDER STRESS

Hartmut Luhleich, Duren; Peter Pflaum; Francisco J. Dias, both of Jülich; Aristides Naoumidis, Jülich-Koslar; Arno Schirbach, Stolberg, and Hubertus Nickel, Jülich-Koslar, all of Fed. Rep. of Germany, assignors to Kernforschungsanlage Jülich Gesellschaft mit beschrankter Haftung, Jülich, Fed. Rep. of Germany

Continuation of Ser. No. 899,574, Apr. 24, 1978, abandoned.
This application Feb. 19, 1980, Ser. No. 122,611
Claims priority, application Fed. Rep. of Germany, Apr. 23, 1977, 2718142; Apr. 23, 1977, 2718143
Int. Cl.³ B32B *3/26, 9/00;* C01B *31/36*
U.S. Cl. 428—308 **4 Claims**

1. A molded body of a coked particle material selected from the group consisting of carbonaceous particles containinmg carbon in the naturally occurring graphitic state and carbonaceous particles containing carbon in an artificially produced state corresponding to or resembling that of graphite, said body having a fired corrosion-resistant skin adhering thereto with thermal stability regardless of the degree of porosity of said body, said skin consisting of a porous surface portion of said body of carbonaceous composition at least 2 mm thick and having a percentage content of an admixed element selected from the group consisting of silicon and zirconium, which percentage content progressively and gradually increases from the inside to the outside of said skin from nearly zero atomic % to about 50 atomic % and is present essentially in the form of a carbide of said element.

4,299,882

MAGNETIC RECORDING MEDIUM AND PROCESS

Fumio Togawa, Otsu; Haruo Andoh, and Toshihiko Tanabe, both of Suita, all of Japan, assignors to Hitachi Maxell, Ltd., Osaka, Japan

Filed May 28, 1980, Ser. No. 154,015
Claims priority, application Japan, May 28, 1979, 54/65800; Jul. 7, 1979, 54/86342
Int. Cl.³ B32B *5/16*
U.S. Cl. 428—329 **7 Claims**

1. A magnetic recording medium which comprises a base and a magnetic layer of a magnetic coating composition comprising magnetic particles and a binder provided on said base, said magnetic coating composition further comprising a dialkylsulfosuccinate which is present in the magnetic coating composition in an amount of 0.1 to 10% by weight, based on the weight of the magnetic particles in the magnetic coating composition.

7. A process for preparing a magnetic recording medium which comprises the steps of (1) reacting a cobalt salt with an alkali in an aqueous suspension containing magnetic iron oxide particles so as to deposit the produced cobalt compound on the surfaces of the magnetic iron oxide particles, (2) drying the cobalt-containing magnetic iron oxide particles, (3) admixing the dried cobalt-containing magnetic iron oxide particles with a binder in a suitable solvent to make a magnetic coating composition and (4) applying the magnetic coating composition on the surface of a base, said cobalt-containing magnetic iron oxide particles obtained in the step (1) being further coated with a dialkylsulfosuccinate at the surfaces prior to drying in step (2) said dialkylsulfosuccinate being present in the magnetic coating composition in an amount of 0.1 to 10% by weight, based on the weight of the magnetic particles in the magnetic coating composition.

4,299,883

METHOD OF MAKING A SOUND-ABSORBENT MATERIAL, AND MATERIAL SO MADE

Jacques Roth, 13, quai Mullenheim, 67000 Strasbourg, and Paul Seiler, 6, rue du Gue, 67400 Illkirch-Graffenstaden, both of France

Filed Oct. 16, 1979, Ser. No. 85,286
Claims priority, application France, Jan. 30, 1979, 79 03394
Int. Cl.³ B32B *5/18, 7/00*
U.S. Cl. 428—332 **6 Claims**

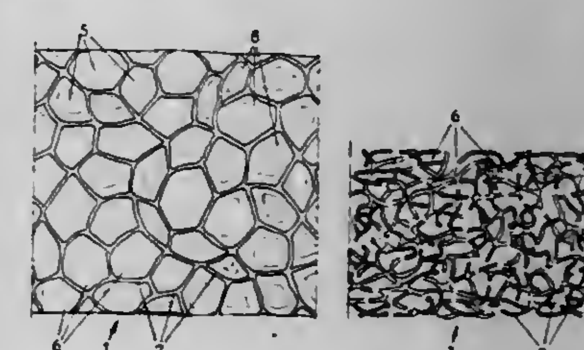

1. A method for the manufacture of a sound-absorbent material, comprising compressing a slab of cellular polycarbodiimide foam of substantially closed cell construction, in a direction perpendicular to the slab, at a temperature below 120° C., and then releasing the pressure on the slab, said compression being performed to such an extent that, upon release of the pressure, the slab recovers its original thickness to the extent that its final thickness is 50 to 66% of its original thickness.

6. A sound-absorbent material produced by the method of claim 1.

4,299,884

TYPE OF WRAPPED TEXTILE THREAD AND PROCESS FOR ITS PRODUCTION WHICH INVOLVES THERMOFUSION TO SECURE WRAPPING TO CORE

Pierre Payen, Lynns, France, assignor to L. Payen & Cie, Lyons, France

Filed Dec. 28, 1979, Ser. No. 108,175

Claims priority, application France, Oct. 1, 1979, 79 01172

Int. Cl.³ D02G *3/28, 3/36, 3/38, 3/40*

U.S. Cl. 428—377 6 Claims

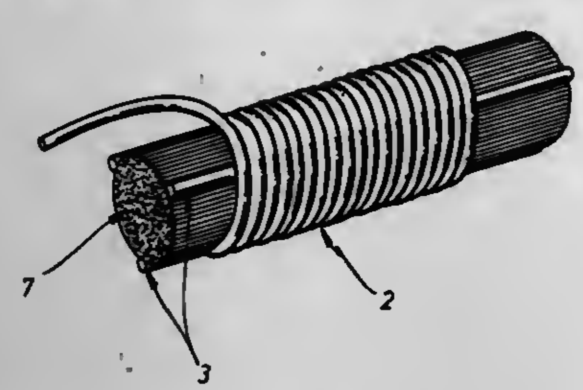

1. A wrapped textile thread comprising threads arranged considerably parallel to each other to form a core,

wherein the multithreaded core is composed of a plurality of individual threads made from a fragile textile substance selected from the group consisting of glass fibers, fibers of refractory material, wherein the refractory material is carbon, boron or silicon, and fibers of an aromatic polyamide,

said core being covered by a wrapping thread with a simple regular and spiral winding,

wherein at least part of the peripheral surface of the core has been joined together by heat fusion with the wrapping thread,

wherein the joining together of the core with the wrapping thread is obtained by a thread-like thermofusible material which is at once compatible with the nature of the wrapping thread and which has a fusion temperature which is lower than the fusion temperature of the core thread and the wrapping thread.

4,299,885

ENCAPSULATED PHOSPHITES

Ved K. Sahajpal, Oudorp, Netherlands; Jacques Delaere, Merelbeke, Belgium; Zigmunt K. Kromolicki, Lisse, and Mattheus R. Settels, Amsterdam, both of Netherlands, assignors to Borg-Warner Chemicals, Inc., Parkersburg, W. Va.

Continuation of Ser. No. 863,823, Dec. 23, 1977, abandoned. This application Aug. 24, 1979, Ser. No. 69,423

Int. Cl.³ B05D *7/00;* **B32B** *5/16*

U.S. Cl. 428—403 9 Claims

1. An encapsulated organic phosphite composition stable to hydrolysis under ordinary conditions of storage comprising a dialkyl pentaerythritol diphosphite wherein the alkyl groups each contain 10–20 carbon atoms, coated with a glycerol ester of montanic acid.

4,299,886

PROCESS FOR SURFACE COATING OF MOLDED POLYCARBONATE RESIN PRODUCT

Shigeru Soejima, Shinmachi, and Yasuji Obomori, Himeji, both of Japan, assignors to Daicel Chemical Industries, Ltd., Osaka, Japan

Filed Sep. 15, 1980, Ser. No. 187,375

Claims priority, application Japan, Sep. 28, 1979, 54-124897

Int. Cl.³ B32B *27/36;* **B05D** *1/38;* **G02B** *1/10*

U.S. Cl. 428—412 21 Claims

1. A process for surface coating of a molded polycarbonate resin product which comprises coating and heating a primer on the surface of the molded polycarbonate resin product and then coating and hardening a coating material essentially consisting of a hydrolyzed partial condensate of an alkyltrialkoxysilane, in which the primer comprises a hydrolyzed partial condensate (A) of silane compounds comprising:

a phenyltrialkoxysilane of the general formula

$$C_6H_5Si(OR^1)_3 \quad (A\text{-}1)$$

in which R^1 represents an alkyl group of C_1–C_4; and an alkyltrialkoxysilane of the general formula

$$R^2Si(OR^3)_3 \quad (A\text{-}2)$$

in which each of R^2 and R^3 represents an alkyl group of C_1–C_4,

in the molar ratio of 1:0–10, being the former:the latter ratio.

4,299,887

TEMPERATURE SENSITIVE ELECTRICAL ELEMENT, AND METHOD AND MATERIAL FOR MAKING THE SAME

Robert G. Howell, Boone, N.C., assignor to TRW, Inc., Cleveland, Ohio

Filed May 7, 1979, Ser. No. 36,566

Int. Cl.³ B32B *9/00;* **C04B** *31/02*

U.S. Cl. 428—428 25 Claims

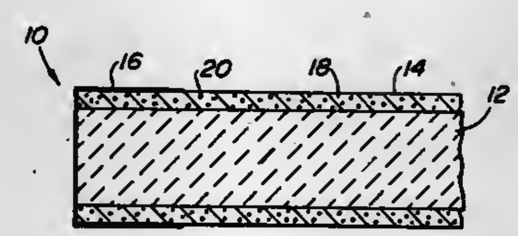

1. A material consisting essentially of a mixture of particles of titanium dioxide (TiO_2), titanium metal, and a glass frit, the glass frit being present in an amount of about 50 to 60% by weight and the particles of titanium metal being present in an amount of about 70 to 130% by weight of the titanium oxide.

5. A temperature sensitive electrical element characterized by a highly linear resistance to temperature relationship and a relatively high negative temperature coefficient of resistance comprising a substrate and a resistor, the resistor including a film of glass on a surface of the substrate having embedded therein and dispersed therethroughout conductive particles composed mainly of an oxide of titanium.

12. A method of making a temperature sensitive electrical element characterized by a highly linear resistance to temperature relationship and a relatively high negative temperature coefficient of resistance comprising the steps of

(a) coating a surface of a substrate with a mixture of glass frit and particles consisting essentially of titanium comprising titanium dioxide, and titanium metal,

(b) firing the mixture in an atmosphere and at a temperature to soften the glass and provide therein conductive titanium oxide particles mainly of titanium oxide (Ti_2O_3), and then

(c) cooling the coated substrate to form a resistor film of glass having conductive titanium oxide particles mainly of titanium oxide (Ti_2O_3) dispersed therethroughout.

4,299,888

METHOD FOR FORMING IN SITU MAGNETIC MEDIA IN THE FORM OF DISCRETE PARTICLES AND ARTICLE

Don E. Pickart, San Jose, Calif.; Philip W. Reed, Tucson, Ariz., and Joseph S. Vranka, Boulder, Colo., assignors to IBM Corporation, Armonk, N.Y.

Filed Apr. 23, 1980, Ser. No. 143,064

Int. Cl.³ B32B *15/04*

U.S. Cl. 428—457 18 Claims

1. A method of forming discrete magnetic particles in situ within a binder matrix comprising:

dispersing with a binder and solvent for the binder a nickel hypophosphite solution,

forming a layer of the nickel hypophosphite solution by removing the binder solvent therefrom,

exposing at least a portion of the layer to a radiant energy source, and

developing the magnetic particles by contacting the exposed layer with a developing solution including a ferromagnetic metal ion, and a reducing agent, whereby discrete magnetic particles are produced in the binder matrix.

12. A layer of discrete magnetic particles dispersing in a binder matrix formed in situ as described in the method of claim 1.

4,299,889

CONTACT FOR VACUUM INTERRUPTER

Masaru Kato; Hitoshi Takeuchi, and Toshiaki Horiuchi, all of Amagasaki, Japan, assignors to Mitsubishi Denki Kabushiki Kaisha, Tokyo, Japan

Filed May 21, 1979, Ser. No. 41,196

Claims priority, application Japan, May 22, 1978, 53-61458

Int. Cl.³ B22F *7/00*

U.S. Cl. 428—569 3 Claims

1. A contact for a vacuum interrupter which is prepared by infiltrating from 4.5 to 14 wt. % of copper into a skeleton formed by sintering tungsten powder having an average diameter of less than 1 μm.

4,299,890

SOLID STATE CELL

Jesse R. Rea, Burlington, and Allen Davis, Cambridge, both of Mass., assignors to Duracell International Inc., Bethel, Conn.

Filed Jun. 18, 1980, Ser. No. 160,531

Int. Cl.³ H01M *10/36*

U.S. Cl. 429—124 23 Claims

1. A solid state cell comprising a solid anode comprised of a metal selected from the group consisting of alkali and alkaline earth metals, a solid electrolyte, and an active solid cathode consisting essentially of a metal or metalloid having a crystalline structure able to accommodate cations of said anode metal.

4,299,891

METHOD FOR FORMING BATTERY TERMINALS AND TERMINALS PRODUCED THEREBY

Verlin A. Mocas, Indianapolis, Ind., assignor to The Richardson Company, Des Plaines, Ill.

Continuation of Ser. No. 527,726, Nov. 27, 1974, Pat. No. 4,143,215. This application Feb. 26, 1979, Ser. No. 14,829

The portion of the term of this patent subsequent to Apr. 1, 1992, has been disclaimed.

Int. Cl.³ H01M *2/32*

U.S. Cl. 429—179 10 Claims

1. A method for forming a metal terminal extending within and through a wall of a battery container fabricated of a thermally deformable material, said terminal providing electrical conduction between the interior and exterior of such container, which method comprises:

providing a wall of such container with a port of preformed configuration adapted for receiving and holding a terminal;

injecting molten metal into such port and within a die mold cavity positioned about the port to shape the molten metal into a terminal of a unitary member having the desired shape, the port in conjunction with the die mold cavity initially acting as a mold for the molten metal;

controlling the temperature of the metal so that said metal freely flows to form the desired shape of the terminal and solidifies without destroying the structure or composition

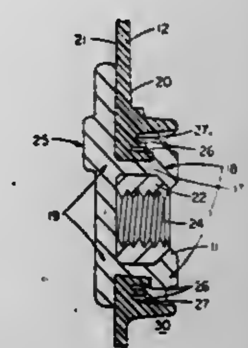

of such port and wall and, upon cooling, acts as a mold for any melted portions of the thermally deformable material to preserve the preformed configuration of said port; and,

recovering the container with the solidifed material extending within and through the wall in the desired shape with desirable electrical properties and providing a fluid tight seal about the terminal between the interior and exterior of the container.

4,299,892

AMORPHOUS AND SHEET DICHALCOGENIDES OF GROUP IVB, VB, MOLYBDENUM AND TUNGSTEN

Martin B. Dines, Santa Ana, Calif., and Russell R. Chianelli, North Branch, N.J., assignors to Exxon Research & Engineering Co., Florham, N.J.

Continuation of Ser. No. 47,491, Jun. 11, 1979, abandoned, which is a continuation-in-part of Ser. No. 641,424, Dec. 17, 1975, abandoned. This application Jul. 28, 1980, Ser. No. 172,971

Int. Cl.³ H01M *6/14, 4/60, 4/58, 6/04*

U.S. Cl. 429—194 25 Claims

1. A composition of the formula MX_2 which is amorphous to X-rays, wherein M is a metal selected from the group consisting of Group IVb, Group Vb, molybdenum and tungsten transition metals and X is a chalcogen selected from the group consisting of sulfur, selenium and tellurium.

4,299,893

PHOTOSENSITIVE ARTICLE FOR MAKING VISUAL AIDS WITH DIAZONIUM COMPOUNDS AND LIQUID EPOXY RESIN

Marcel Pigeon; Marta Szretter, both of Neuilly, and Chantal Perie, Paris, all of France, assignors to Rhone-Poulenc Systemes, Creteil, France

Filed Mar. 26, 1980, Ser. No. 134,326

Claims priority, application France, Mar. 28, 1979, 79 07747

Int. Cl.³ G03C *1/54, 1/60, 1/78*

U.S. Cl. 430—8 35 Claims

1. A photosensitive article for making visual aids such as montage films, duplicating films, color guide films, microfiche films and the like which comprises a transparent support coated with a photosensitive layer of a film-forming, oleophilic photopolymerizable composition which is soluble in organic solvents consisting essentially of,

(1) 30% to 60% by weight of at least one epoxy resin forming monomer or prepolymer, said epoxy resin or mixture of epoxy resins being fluid at ambient temperature and having an epoxy equivalent of less than about 350, a Durran melting point of about 38° C. or less and a viscosity of at least about 5000 centipoises at 25° C.; and

(2) 40% to 70% by weight of a photosensitive reaction product of

(a) a water-soluble, photosensitive condensation product of (i) a diazonium compound and (ii) an organic condensation agent, and

(b) an organic coupling agent;

wherein said photosensitive reaction product (2) is soluble in organic solvents and only slightly soluble in water, whereby when said photosensitive layer is imagewise exposed to ultraviolet light, the exposed zones are polymerized and hardened and the unexposed zones are easily removable by washing with water alone.

4,299,894

ELECTRICALLY PHOTOSENSITIVE MATERIALS AND ELEMENTS FOR PHOTOELECTROPHORETIC IMAGING PROCESSES

Thomas R. Klose, and Frank G. Webster, both of Rochester, N.Y., assignors to Eastman Kodak Company, Rochester, N.Y.

Filed Jun. 23, 1980, Ser. No. 161,706

Int. Cl.³ G03G *17/04, 5/06*

U.S. Cl. 430—9 **14 Claims**

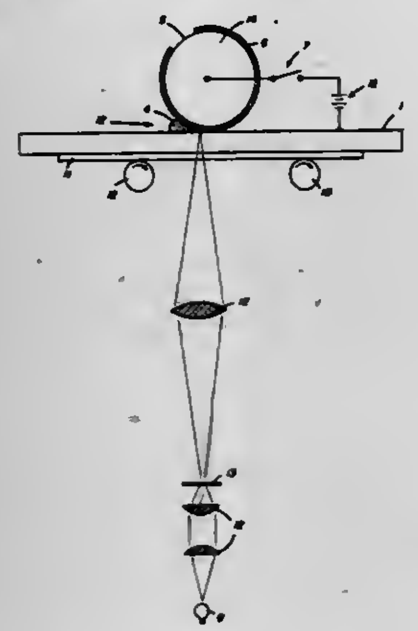

1. A photoelectrophoretic image comprising an electrically photosensitive material comprising an electrically insulating carrier, a charge control agent and an electrically photosensitive compound of the structure:

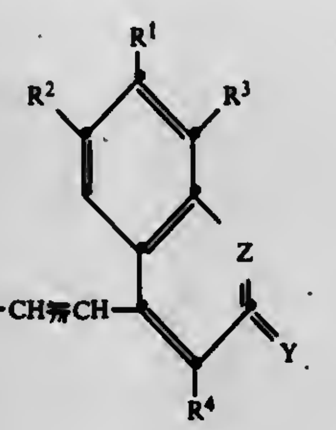

I.

wherein:

n represents zero, 1 or 2;

Y represents O or S;

Z represents O or NR in which R represents hydrogen, alkyl, aryl, or aralkyl;

R^1, R^2 and R^3, which are the same or different, represent hydrogen, alkoxy, hydroxy, alkyl, aryl, alkylcarboxy or arylcarboxy; or R^1 and R^3 taken together with the carbon atoms to which they are attached provide sufficient atoms to complete a carbocyclic ring of from 6–14 carbon atoms;

R^4 represents hydrogen or cyano; and

A represents a nitrogen substituted basic heterocyclic nucleus selected from the group consisting of imidazole, 3H-indole, thiazole, benzothiazole, naphthothiazole, thianaphtheno-[7,6-d]thiazole, oxazole, benzoxazole, naphthoxazole, selenazole, benzoselenazole, naphthoselenazole, thiazoline, 2-quinoline, 4-quinoline, 1-isoquinoline, benzimidazole, 2-pyridine and 4-pyridine.

4,299,895

PHOTOGRAPHIC ELEMENTS CONTAINING POLYMERS WHICH COORDINATE WITH METAL IONS

William C. Archie, Jr., and Gerald A. Campbell, both of Rochester, N.Y., assignors to Eastman Kodak Company, Rochester, N.Y.

Division of Ser. No. 944,477, Sep. 21, 1978, Pat. No. 4,239,847. This application Dec. 10, 1979, Ser. No. 102,099

Int. Cl.³ G03C *1/40, 5/54*

U.S. Cl. 430—17 **14 Claims**

13. A receiving element containing a support having thereon at least one layer comprising a mordant and a metallized dye, said element containing either in the mordant layer or in a layer intervening the support and mordant layer a metal complex of metal ions with a polymer comprising from about 5 to 100 weight percent of the recurring units having the structure.

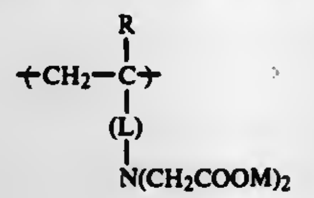

wherein R is H, halogen or an alkyl group containing from 1 to 6 carbon atoms, L is a bivalent linking group and M is selected from the group consisting of H, an ammonium cation and an alkali metal ion.

4,299,896

ELECTROPHOTOGRAPHIC SENSITIVE MATERIALS CONTAINING A DISAZO PIGMENT

Mitsuru Hashimoto, Hino; Kiyoshi Sakai, Tokyo; Masafumi Ohta; Akio Kozima, both of Yokohama; Masaomi Sasaki, Kawasaki, and Kyoji Tsutsui, Tokyo, all of Japan, assignors to Ricoh Co., Ltd., Tokyo, Japan

Filed Jul. 17, 1978, Ser. No. 925,157

Claims priority, application Japan, Jul. 18, 1977, 52-84976; Jul. 18, 1977, 52-84977; Jul. 19, 1977, 52-86255; Jul. 22, 1977, 52-87351

Int. Cl.³ G03G *5/06*

U.S. Cl. 430—58 **16 Claims**

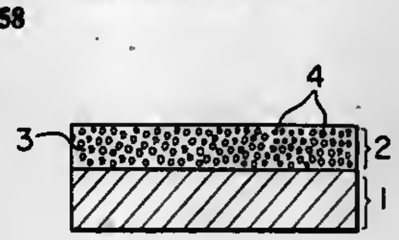

1. An electrophotographic material having a high sensitivity as well as a high flexibility, which comprises an electrically conductive support and a photosensitive layer formed thereon, said photosensitive layer consisting essentially of fine particles of disazo pigment selected from the group consisting of disazo pigments having the formulas I, and II,

formula I:

formula II:

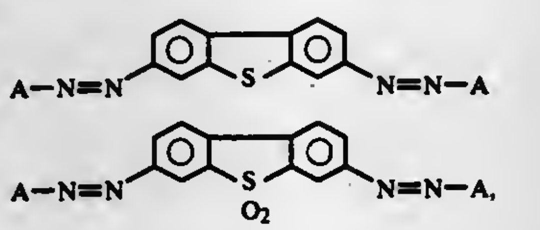

wherein A is selected from the group consisting of

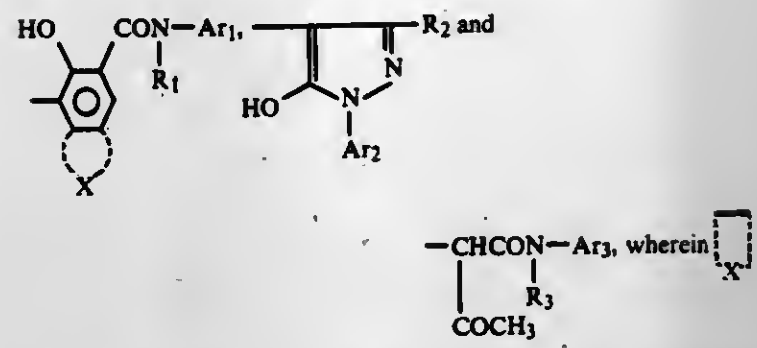

is a fused ring selected from the group consisting of benzene ring, halobenzene ring, naphthalene ring, indole ring, carbazol ring and benzofuran ring; Ar_1 is a member selected from the group consisting of phenyl, methylphenyl, methoxyphenyl, chlorophenyl, nitrophenyl, ethoxyphenyl, methylchlorophenyl, dimethylphenyl, methoxychlorophenyl, methoxybromophenyl, methoxymethylphenyl, dimethoxyphenyl, dimethoxychlorophenyl, dimethylaminophenyl, cyanophenyl, carboxyphenyl, benzenesulfonic acid sodium salt, tert-butoxyphenyl, naphthyl, methoxydibenzofuryl and carbazolyl; each of Ar_2 and Ar_3 is a member selected from the group consisting of phenyl, naphthyl, methoxyphenyl, methylphenyl, acetylaminophenyl, dimethylaminophenyl, cyanophenyl, nitrophenyl, dinitrophenyl, chlorophenyl, trichlorobenzenesulfonic acid, benzenesulfonic acid and benzenesulfonamide; each of R_1 and R_3 is a member selected from the group consisting of hydrogen, methyl, ethyl, phenyl and chlorophenyl; and R_2 is a member selected from the group consisting of methyl, carboxyl and $—COOC_2H_5$; and a resinous binder.

4,299,897

AROMATIC AMINO CHARGE TRANSPORT LAYER IN ELECTROPHOTOGRAPHY

Milan Stolka, Fairport; John F. Yanus, Webster; Damodar M. Pai, Fairport; Dale S. Renfer, Rochester, and James M. Pearson, Webster, all of N.Y., assignors to Xerox Corporation, Stamford, Conn.

Continuation of Ser. No. 969,900, Dec. 15, 1978, abandoned, which is a continuation of Ser. No. 801,116, May 27, 1977, abandoned, which is a continuation-in-part of Ser. No. 716,404, Aug. 23, 1976, abandoned. This application Feb. 15, 1980, Ser. No. 121,768

Int. Cl.³ G03G *5/14, 5/06*

U.S. Cl. 430—59 **8 Claims**

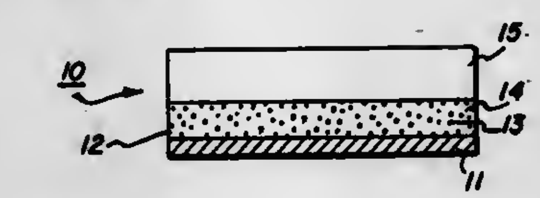

1. An imaging member comprising a charge generation layer comprising a layer of photoconductive material and a contiguous charge transport layer of a polycarbonate resin having dispersed therein from about 10 to about 75 percent by weight of:

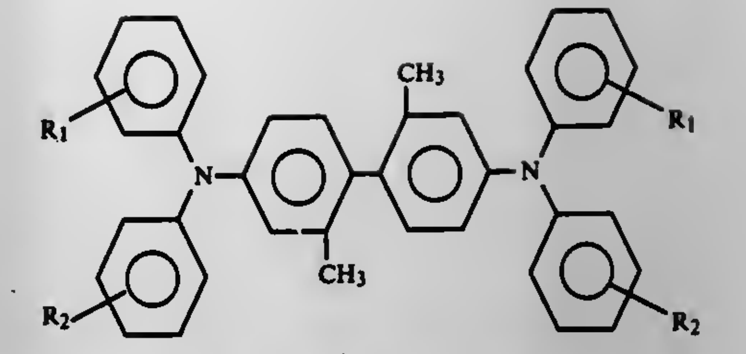

wherein R_1 is selected from the group consisting of hydrogen, (ortho) CH_3, (meta) CH_3 and (para) CH_3, and R_2 is selected from the group consisting of hydrogen, (ortho) CH_3, (meta) CH_3 and (para) CH_3, said photoconductive layer exhibiting the capability of photogeneration of holes and injection of said holes and said charge transport layers being substantially nonabsorbing in the spectral region at which time photoconductive layer generates and injects photogenerated holes but being capable of supporting the injection of photogenerated holes from said photoconductive layer and transporting said holes through said charge transport layer, said charge transport layer being substantially nonphotoconductive when exposed to light in the wavelength of from about 4,000 to about 8,000 Angstroms.

4,299,898

POSITIVELY CHARGED TONERS CONTAINING QUATERNARY AMMONIUM SALTS ATTACHED TO ACRYLATE POLYMERS

Meurig W. Williams, Rochester, and Christoper J. AuClair, Fairport, both of N.Y., assignors to Xerox Corporation, Stamford, Conn.

Filed May 3, 1979, Ser. No. 35,752

Int. Cl.³ G03G *9/10, 9/14*

U.S. Cl. 430—106 **9 Claims**

1. A dry developer composition comprised of 94 percent by weight of a terpolymer resin of styrene, n-butylmethacrylate, and dimethyl amino ethyl methacrylate hydrochloride, 6 percent by weight of carbon black, and a carrier material consisting of a steel core coated with a perfluoro-alkoxy fluoropolymer.

3. A dry developer composition comprised of a 94 percent by weight of a terpolymer of styrene, n-butylmethacrylate, and dially-dimethyl ammonium chloride, 6 percent by weight of carbon black, and a carrier material consisting of a steel core coated with a vinylidene fluoride resin.

4,299,899

TONER ADDITIVES

Jack C. Azar, Rochester, N.Y., and Russel E. Wellman, Southbury, Conn., assignors to Xerox Corporation, Stamford, Conn.

Division of Ser. No. 958,911, Nov. 8, 1978. This application Mar. 3, 1980, Ser. No. 126,785

Int. Cl.³ G08G *9/02*

U.S. Cl. 430—108 **12 Claims**

1. A toner composition for use in flash fusing electrophotographic imaging systems comprised of a resin and an additive of a diester of the formula:

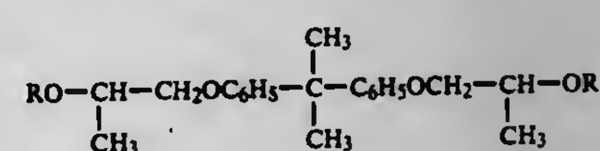

wherein R is of the formula

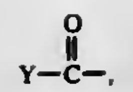

Y being independently selected from the group consisting of phenyl, substituted phenyl, aliphatic, and substituted aliphatic.

4,299,900

ELECTROSTATIC IMAGE MAGNETIC DEVELOPING PROCESS

Yasuo Mitsuhashi, Yokohama; Masashi Kiochi, Kawasaki; Yoshio Takasu, Tama; Hiroshi Fukumoto, Kawasaki; Takashi Hino, Tokyo, and Masaki Uchiyama, Kawasaki, all of Japan, assignors to Canon Kabushiki Kaisha, Tokyo, Japan

Filed Mar. 10, 1980, Ser. No. 128,859

Claims priority, application Japan, Mar. 9, 1979, 54-27324; Mar. 9, 1979, 54-27325

Int. Cl.³ G03G *13/09*

U.S. Cl. 430—122 **11 Claims**

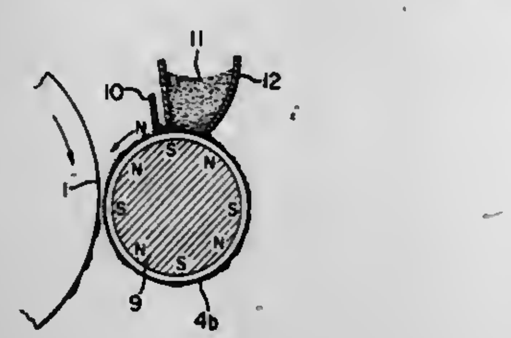

1. A process for developing an electrostatic image which comprises the steps of:

defining a developing zone by disposing an electrostatic image bearing member having an electrostatic image on the surface thereof and a developer carrying member in opposed relationship and with a clearance therebetween;

providing a layer of magnetic developer on the surface of said developer carrying member having a thickness less than the distance defined by said clearance at the developing zone, wherein said magnetic developer is insulating so as to generate and maintain a triboelectric charge and contains 10-50 percent by weight of magnetic toner particles which are 20-35 microns in size; and

electrically transferring the magnetic developer having a triboelectric charge to the electrostatic image bearing member in the presence of a magnetic field.

4,299,901

METHOD OF DEVELOPMENT

Raymond W. Huggins, Pittsford, N.Y., assignor to Xerox Corporation, Stamford, Conn.

Division of Ser. No. 34,095, Apr. 27, 1979. This application Apr. 21, 1980, Ser. No. 141,867

Int. Cl.³ B05D *1/04*

U.S. Cl. 430—122 **34 Claims**

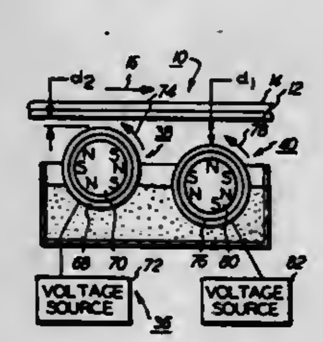

1. A method of developing a latent image with a conductive developer composition comprising marking particles, including the steps of:

contacting the latent image with the developer composition in at least a first region and a second region, with the first region being spaced from the second region, to deposit marking particles onto the latent image, thereby developing the latent image; and

controlling the development process to cause the developer composition to have a first conductivity in the first region to optimize development of the solid areas within the latent image with the marking particles, and to cause the developer composition to have a second conductivity in the second region with the second conductivity being lower than the first conductivity to optimize development of the lines within the latent image with the marking particles.

4,299,902

IMAGE FORMING PROCESS AND APPARATUS THEREFOR

Ikuo Soma, Yokohama; Tamotu Magome, Kawasaki, and Toru Matsumoto, Kita, all of Japan, assignors to Canon Kabushiki Kaisha, Tokyo, Japan

Filed Jul. 18, 1978, Ser. No. 925,749

Claims priority, application Japan, Jul. 26, 1977, 52-89666

Int. Cl.³ B05D *1/28*

U.S. Cl. 430—125 **6 Claims**

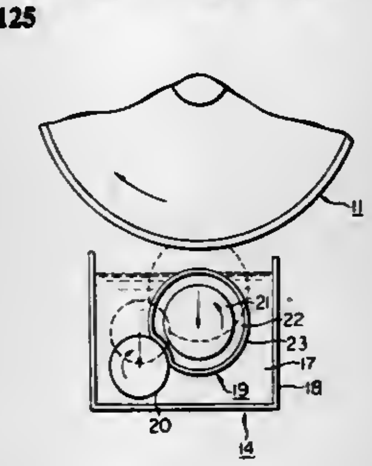

1. In an image forming process for developing an electrostatic image with liquid developer which comprises the steps of performing liquid development by moving an elastic liquid developer supply member capable, upon elastic deformation thereof, of squeezing out and absorbing liquid developer into pressure contact with an image-holding surface bearing the electrostatic image, displacing said image-holding surface during the development, and separating said supply member from said surface after development, the improvement comprising the steps of immersing substantially the entire liquid developer supply member within the liquid developer after its separation from the image-holding surface so that its elastic material is maintained wet throughout after the development has been completed, and then stopping the displacement of said image-holding surface after the final contact portion of said surface when said supply member has been cleaned.

4,299,903

EMULSION POLYMERIZATION PROCESS FOR DRY POSITIVE TONER COMPOSITIONS EMPLOYS CHARGE CONTROL AGENT AS WETTING AGENT

Christopher J. AuClair, Fairport, and Chin H. Lu, Webster, both of N.Y., assignors to Xerox Corporation, Stamford, Conn.

Filed Jul. 3, 1980, Ser. No. 165,582

Int. Cl.³ G03G *9/10*

U.S. Cl. 430—137 **3 Claims**

1. A process for preparing dry positively charged toner particles which comprises subjecting to an emulsion polymerization, or suspension polymerization in the absence of a surfactant, a toner resin and colorant, the resin being a styrene/n-

butyl methacrylate copolymer, or a styrene butadiene copolymer, carbon black, and a charge control agent present in the amount of from 0.1% to about 10 weight %, the charge control agent being selected from cetyl benzyl dimethyl ammonium chloride, distearyl dimethyl ammonium chloride or cetyl pyridinium chloride, which charge control agent functions as a wetting agent in the polymerization process, and as a charge control agent for the toner resin, said charge control agent being permanently attached to the toner resin and uniformly dispersed in said resin thereby resulting in a toner composition having a positive uniform triboelectrostatic charge over a substantial period of time, improved particle to particle uniformity, a narrow charge distribution, and the substantial elimination of the leaching of the charge control agent from the toner resin the reaction being accomplished at a temperature of at least 50° C.

4,299,904

PHOTOGRAPHIC IMAGE ENHANCEMENT METHOD EMPLOYING PHOTOLUMINESCENCE

Richard R. Pettijohn, Portola Valley; Charles Leung, Redwood City; Ronald G. Manning, Menlo Park; Zoila Reyes, Menlo Park, and Malcolm Thackray, Menlo Park, all of Calif., assignors to SRI International, Menlo Park, Calif.

Filed Nov. 28, 1978, Ser. No. 964,119

Int. Cl.³ G03C *5/17*

U.S. Cl. 430—139 **5 Claims**

1. In a method for the intensification of underexposed or low optical density regions of properly exposed metallic silver photographic images contained in a protective medium on a film and produced by exposure of the film to light, x-ray, or like radiant energy in a non-electrophotographic photographic process such as a conventional silver halide photographic process, which method comprises

making said underexposed photographic image photoluminescent by providing on the film, in proportion to the localized radiant energy exposure of the film, a photoluminescent material, said step of making said underexposed photographic image photoluminescent including the steps of (a) converting said silver metallic image to a corresponding silver halide image, and (b) toning said silver halide image with a fluorescent dye to provide a corresponding fluorescent dye image thereof,

exposing said photoluminescent image to a source of photons for exciting the same to luminescence in proportion to the localized optical density of said photoluminescent material used to make the photographic image photoluminescent, and

recording said luminescence by recording means focused on the luminescent image during said exposing step for producing an intensified image of said underexposed photographic image to be intensified.

4,299,905

WATER-DEVELOPABLE FILM-FORMING DIAZONIUM COMPOUND CONTAINING PHOTOPOLYMERIZABLE COMPOSITIONS AND NEGATIVE-WORKING LITHOGRAPHIC PLATES PREPARED THEREFROM

Marcel Pigeon; Marta Szretter, both of Neuilly, and Chantal Perie, Paris, all of France, assignors to Rhone-Poulenc Systems, Creteilcedex, France

Filed Mar. 26, 1980, Ser. No. 134,328

Claims priority, application France, Mar. 28, 1979, 79 07746

Int. Cl.³ G03C *1/52, 1/60, 1/94*

U.S. Cl. 450—157 **24 Claims**

1. A film-forming oleophilic photopolymerizable composition which is soluble in organic solvents and is suitable for use as the photosensitive layer of water-developable negative-working lithographic plate, said composition consisting essentially of,

(1) 30% to 60% by weight of at least one epoxy resin forming monomer or prepolymer, said epoxy resin or mixture of epoxy resins being fluid at ambient temperature and having an epoxy equivalent of less than about 350, a Durran melting point of about 38° C. or less and a viscosity of at least about 5000 centipoises at 25° C.; and

(2) 40% to 70% by weight of a photosensitive reaction product of

(a) a water-soluble, photosensitive condensation product of (i) a diazonium compound and (ii) an organic condensation agent, and

(b) an organic coupling agent;

wherein said photosensitive reaction product (2) is soluble in organic solvents and only slightly soluble in water,

whereby when an organic solvent solution of said composition is deposited on a hydrophilic support, and imagewise exposed to ultraviolet light, the exposed zones are polymerized and hardened and the unexposed zones are easily removable by washing with water alone.

4,299,906

LIGHT-SENSITIVE COLOR PROOFING FILM WITH SURFACTANT IN A LIGHT-SENSITIVE COATING

Shuchen Liu, Clinton, N.J., assignor to American Hoechst Corporation, Somerville, N.J.

Continuation-in-part of Ser. No. 45,468, Jun. 1, 1979, abandoned. This application May 30, 1980, Ser. No. 154,737

Int. Cl.³ G03C *1/78, 1/60, 1/68*

U.S. Cl. 430—157 **16 Claims**

1. A color proofing foil with improved developability comprising a sustantially transparent polmeric base sheet having a thin coating of a light sensitive composition adhered to a surface thereof, said light sensitive composition comprising a mixture of:

(a) a colorant;

(b) an organic light sensitive material; and

(c) an anionic surfactant which is the reaction product of about one mole of P_2O_5 with about 2 to 4.5 moles of an alkylene condensation product of at least about one mole of oxide having 2-4 carbon atoms with one mole of a compound contaning about 6 to 150 carbon atoms and a reactive hydrogen atom and selected from the group consisting of phenol, alkyl phenols, aliphatic alcohols, fatty acids, fatty amines, fatty amides, rosin amines, long chain sulfonamides, long chain-substituted aryl sulfonamides, and high molecular weight mercaptans, said reaction product being prepared under substantially anhydrous conditions and at a temperature below about 110° C. down to about room temperature, the amount of said surfactant being sufficient to improve developability of said color proofing foil.

4,299,907

STORAGE STABLE PHOTOSENSITIVE DIAZO LITHOGRAPHIC PRINTING PLATES

Stephen E. Barkle, Warwick, R.I.; Albert S. Deutsch, Hartsdale, and Robert S. Piller, Hastings, both of N.Y., assignors to Polychrome Corporation, Yonkers, N.Y.

Continuation of Ser. No. 932,740, Aug. 10, 1978, abandoned. This application Nov. 15, 1979, Ser. No. 94,527

Int. Cl.³ G03C *1/54, 1/60, 1/70*

U.S. Cl. 430—175 **3 Claims**

1. A lithographic printing plate which comprises an aluminum sheet substrate having coated thereon a composition which is comprised of,

I. a light sensitive, high molecular weight diazo polymer having the formula:

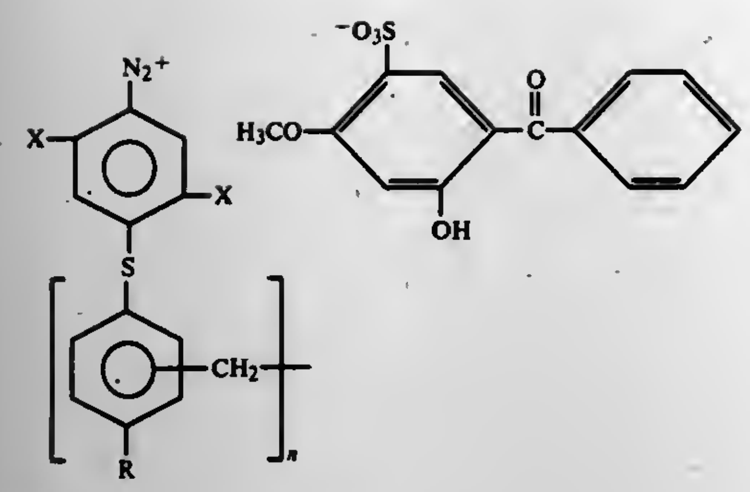

where

R is methyl or hydrogen

X is methoxy, ethoxy or hydrogen

n is an integer from 8 to 970

II. an oleophilic binding resin which is an admixture of

(a) an epoxy resin;

(b) a polyester; and

(c) a poly(vinyl acetal) and

III. a colorant which is an admixture of methyl orange and Basic blue dye.

4,299,908

METHOD FOR FORMING A NEGATIVE IMAGE

Noboru Ito; Eiichi Sakamoto; Mikio Kawasaki, and Takashi Uchida, all of Hino, Japan, assignors to Konishiroku Photo Industry Co., Ltd., Tokyo, Japan

Filed Apr. 10, 1980, Ser. No. 138,934

Claims priority, application Japan, Apr. 13, 1979, 54-5682

Int. Cl.³ G03C *5/54*

U.S. Cl. 430—244 **10 Claims**

1. A method for forming a negative image comprising imagewise exposing a photographic material to provide exposed areas and unexposed areas, said material comprising, on a support,

(1) an emulsion layer containing a light-sensitive silver halide, (2) unsensitized silver halide metallic salt grains which are more soluble in a developer than the light sensitive silver halide, and (3) nuclei for physical development,

processing said material in the presence of a reducing agent and a solvent for said grains with said developer containing a substance which renders said grains less soluble by adsorbing thereto, said developer rendering said grains in said exposed areas and not in said unexposed areas soluble in said solvent, whereby metal ions are released and deposited on said nuclei.

4,299,909

SILVER HALIDE PHOTOGRAPHIC LIGHT-SENSITIVE MATERIAL

Eiji Imatomi, and Kensuke Goda, both of Minami-ashigara, Japan, assignors to Fuji Photo Film Co., Ltd., Minami-ashigara, Japan

Filed Aug. 7, 1980, Ser. No. 175,987

Claims priority, application Japan, Aug. 7, 1979, 54/100593

Int. Cl.³ G03C *5/30*

U.S. Cl. 430—264 **18 Claims**

1. A silver halide photographic light-sensitive material comprising a support having thereon an antihalation layer, a silver halide photographic light-sensitive layer, and a hydrophilic colloid layer, said antihalation layer being located between said support and said silver halide photographic light-sensitive layer, wherein at least one silver halide light-sensitive layer or hydrophilic colloid layer contains a compound represented by the formula (I), a compound represented by the formula (II), and a compound represented by the formula (III)

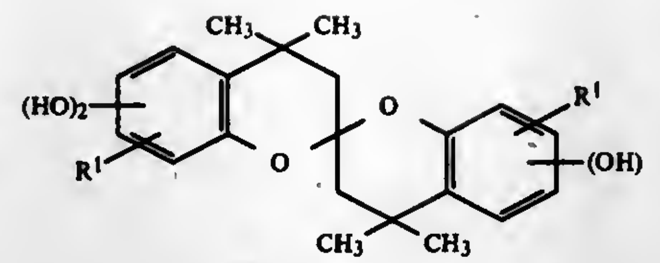

(I)

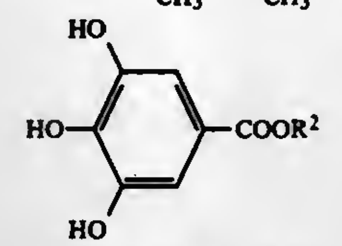

(II)

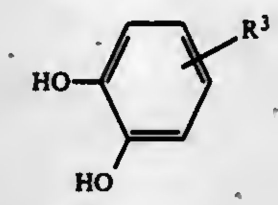

(III)

wherein R^1 represents hydrogen or a substituted or unsubstituted alkyl group; R^2 represents a substituted or unsubstituted alkyl group; and R^3 represents a substituted or unsubstituted alkyl group.

4,299,910

WATER-BASED PHOTORESISTS USING STILBENE COMPOUNDS AS CROSSLINKING AGENTS

Ling K. Hung, Edison, and Allen Bloom, East Windsor, both of N.J., assignors to RCA Corporation, New York, N.Y.

Filed Nov. 24, 1980, Ser. No. 209,535

Int. Cl.³ G03C *1/68*

U.S. Cl. 430—270 **16 Claims**

1. An aqueous photoresist composition comprising:

(a) a water-soluble polymeric material, and;

(b) a crosslinking agent therefore having the formula

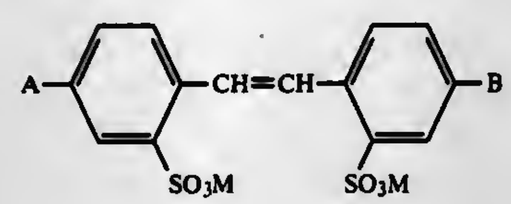

wherein A and B are independently amino or nitro, and M is an alkali metal or ammonium ion.

4,299,911

HIGH ENERGY RADIATION CURABLE RESIST MATERIAL AND METHOD OF USING THE SAME

Hideo Ochi, Kawasaki; Yumi Shibata, and Kohtaro Nagasawa, both of Tokyo, all of Japan, assignors to Somar Manufacturing Co., Ltd., Tokyo, Japan

Filed Aug. 9, 1978, Ser. No. 932,160

Claims priority, application Japan, Aug. 9, 1977, 52/95456; Jun. 12, 1978, 53/69808

Int. Cl.² B05D *3/06;* G03C *1/71*

U.S. Cl. 430—286 **32 Claims**

1. A resist material curable by irradiation with high energy radiation but substantially non-curable by irradiation with light having a wavelength of about 300 nm or more, the resist material comprising, as a main component, a solvent-soluble polymer containing ethylenically unsaturated double bonds, the polymer being obtained by reacting (a) a polymer having a plurality of oxirane rings therein and (b) a monomer containing (i) at least one ethylenically unsaturated double bond and (ii) one functional group capable of opening the oxirane rings, and then opening unreacted oxirane rings with an oxirane ring-opening agent selected from the group consisting of a hydrogen halide, hydrogen sulfide and hydrogen cyanide.

4,299,912

PROCESS FOR THE PRODUCTION OF PRINTING PLATES

Keisuke Shiba; Sho Nakao, and Tadao Toyama, all of Shizuoka, Japan, assignors to Fuji Photo Film Co., Ltd., Minami-ashigara, Japan

Filed Aug. 7, 1980, Ser. No. 176,154

Claims priority, application Japan, Aug. 7, 1979, 54-100596

Int. Cl.³ G03F *7/02*

U.S. Cl. 430—302 **10 Claims**

1. In a process for producing a lithographic printing plate from a light-sensitive element comprising a support with a hydrophilic surface, a non-silver light-sensitive layer provided on the support which forms a water-insoluble lipophilic image and a gelatino-silver halide light-sensitive emulsion layer on the non-silver light-sensitive layer which comprises the steps of:

(a) imagewise exposing the light-sensitive element;

(b) developing the gelatino-silver halide light-sensitive emulsion layer to form a silver image;

(c) exposing the non-silver light-sensitive layer to radiation to which it is sensitive;

(d) washing out the developed gelatino-silver halide light-sensitive emulsion layer; and

(e) developing the non-silver light-sensitive layer to remove either exposed area or unexposed area of said non-silver light-sensitive layer thereby obtaining a lithographic plate comprising the water-insoluble lipophilic image, the improvement where the washing-out of step (d) is carried out in the presence of a proteolytic enzyme.

4,299,913

PHOTOGRAPHIC REVERSAL PROCESS WITHOUT SECOND EXPOSURE

Ubbo Wernicke, Odenthal, Fed. Rep. of Germany, assignor to Agfa-Gevaert AG, Leverkusen, Fed. Rep. of Germany

Continuation of Ser. No. 946,361, Sep. 27, 1978, abandoned. This application Oct. 22, 1979, Ser. No. 87,050

Claims priority, application Fed. Rep. of Germany, Oct. 1, 1977, 2744356

Int. Cl.³ G03C *5/50*

U.S. Cl. 430—379 **8 Claims**

1. In a color process reversal for the production of photographic images by image-wise exposure of a light-sensitive photographic material containing at least one silver halide emulsion layer, black and white development, preliminary to second development, treating the developed layer with a stabilizing bath containing fogging metal complexes and then subsequently color developing the material so treated with the improvement wherein said bath having a pH of 3 to 8 containing, in the absence of a color developing agent, a fogging metal complex selected from the group consisting of carboxylic acid and phosphonic acid complexes of tin-II ions with a stabilizing amount of at least one stabilizer or a salt thereof which comprises a compound of the following general formula or a tautomeric form thereof

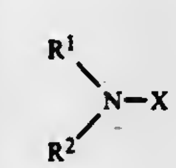

wherein

R^1 and R^2 which are the same or different, represent hydrogen,

a saturated or unsaturated aliphatic group, an aryl group, a heterocyclic group or an acyl group;

X represents OR^3 or NR^4R^5 wherein R^3, R^4 and R^5, which are the same or different, are defined as R^1;

and/or R^1 and R^2 together represent the ring members required for completing a 5-membered or 6-membered ring.

5. In a fogging bath for color reversal processing of silver halide containing photographic materials which bath composition contains in the absence of a color-developing agent a fogging agent capable of fogging imagewise exposed and black and white developed silver halide containing photographic materials,

the improvement which comprises the bath having a pH of from 3 to 10 and containing in solution a buffering agent for maintaining said pH and a fogging metal complex, selected from the group consisting of carboxylic acid and phosphonic acid complexes of tin-II ions and a stabilizing amount of at least one stabilizer or a salt thereof which is a compound of the following general formula or to a tautomeric form thereof

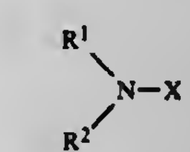

wherein

R^1 and R^2 which are the same or different, represent hydrogen, a saturated or unsaturated aliphatic group, an aryl group, a heterocyclic group or an acyl group;

X represents OR^3 or NR^4R^5, wherein R^3, R^4 and R^5 which are the same or different, are defined as R^1;

and/or R^1 and R^2 together represent the ring members required for completing a 5-membered or 6-membered ring.

4,299,914

METHOD FOR FORMING A CYAN DYE IMAGE

Wataru Fujimatsu; Yasushi Usagawa; Osamu Sasaki, and Katsumi Matsuura, all of Hino, Japan, assignors to Konishiroku Photo Industry Co., Ltd., Tokyo, Japan

Filed May 1, 1980, Ser. No. 145,684

Claims priority, application Japan, May 7, 1979, 54/55380

Int. Cl.³ G03C *7/00*

U.S. Cl. 430—384 **26 Claims**

1. A method for forming a cyan dye image by developing an imagewisely exposed silver halide photographic material with a developer containing a color developing agent in the presence of a cyan coupler of the following formula:

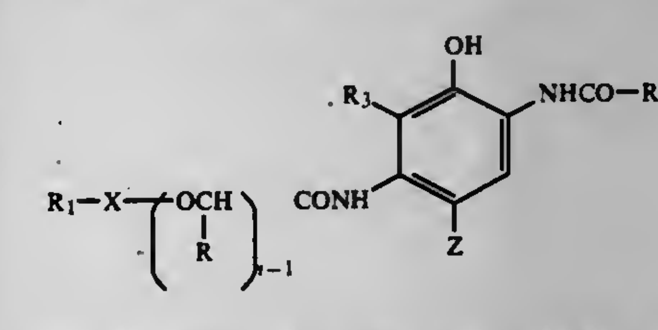

in which R represents a hydrogen atom or an alkyl group having a carbon number of one to twenty; R_1 represents an alkylsulfonamide or alkylsulfamoyl group; R_2 represents an alkyl, aryl group or a 5 or 6-membered heterocyclic group containing a nitrogen, oxygen or sulfur atom; R_3 represents a hydrogen or halogen atom; X represents an alkylene, metaphenylene or orthophenylene group; Z represents a hydrogen atom or a split-off radical; and n has an integral value of one or two.

4,299,915

ASSAY FOR MUTAGENESIS IN BACTERIAL CELLS

William G. Thilly, Cambridge, Mass., and Thomas R. Skopek, Stafford Springs, Conn., assignors to Massachusetts Institute of Technology, Cambridge, Mass.

Filed Oct. 17, 1977, Ser. No. 842,693

Int. Cl.^{3} C12Q *1/68*

U.S. Cl. 435—6 **1 Claim**

1. An assay for determining mutagenesis, comprising:

a. exposing a culture of bacterial cells to an agent to be tested for its mutagenic effects on said cells and then adding an active drug-metabolizing system to said culture of bacterial cells;

b. incubating exposed cells in the presence of a purine analog which acts as a purine phosphoribosyl transferase substrate and under conditions which allow said exposed cells to express phenotypically-developed resistance to said purine analog; and,

c. determining the fraction of mutant cells.

4,299,916

PREFERENTIAL SIGNAL PRODUCTION ON A SURFACE IN IMMUNOASSAYS

David J. Litman, Palo Alto, and Edwin F. Ullman, Atherton, both of Calif., assignors to Syva Company, Palo Alto, Calif.

Filed Dec. 26, 1979, Ser. No. 106,620

Int. Cl.^{3} G01N *33/54*; C12Q *1/68*; G01N *1/48*

U.S. Cl. 435—6 **43 Claims**

1. A method for detecting the presence of an analyte in a sample suspected of containing said analyte, where said analyte is a member of an immunological pair (mip) consisting of ligand and homologous antiligand;

said method involving (1) the partitioning of an enzyme bound to a mip—enzyme-bound-mip—between a surface and a liquid phase, where said partitioning is through the intermediacy of ligand-antiligand binding to a mip-bound-surface in relation to the amount of analyte in said sample;, said surface being porous and permitting approach and binding of enzyme-bound-mip to mip of said mip-bound-surface, either directly or in combination with said ligand and (2) the change in intensity of a detectible signal from a surface resulting from the change in concentration of a signal generating compound associated with said surface, said change in intensity being related to the amount of reaction product produced by said enzyme bound to said surface;

said method comprising:

(a) combining in an aqueous assay medium;

(1) said sample;

(2) mip-bound-surface, substantially immersed in said medium wherein substantially all of said mip-bound-surface is uniformly contacted with said sample in said medium;

(3) enzyme-bound-mip; and

(4) the remaining members of the signal producing system, which system includes at least a second enzyme other than said enzyme-bound-mip, wherein the product of one enzyme is the substrate of the other enzyme, and a solute which is capable of undergoing a catalyzed reaction to produce a product which results in a change in amount of a signal generating compound associated with said surface and capable of producing a detectible signal,

(b) waiting a sufficient time for enzyme-bound-mip to diffuse to said surface and at least a portion of said enzyme-bound-mip to bind to said surface through the intermediacy of ligand-antiligand binding and for a change in the amount of signal generating compound associated with said surface in relation to the amount of analyte in said sample;

(c) determining the intensity of said detectible signal at said surface as a function of the amount of analyte in said sample.

4,299,917

DIAGNOSTIC AGENTS FOR THE DETECTION OF LEUKOCYTES IN BODY FLUIDS

Dieter Berger, Viernheim; Günter Frey, Ludwigshafen; Manfred Kuhr, and Wolfgang Werner, both of Mannheim, all of Fed. Rep. of Germany, assignors to Boehringer Manneheim GmbH, Mannheim, Fed. Rep. of Germany

Filed Jan. 21, 1980, Ser. No. 114,143

Claims priority, application Fed. Rep. of Germany, Feb. 14, 1979, 2905531

Int. Cl.^{3} G01N *33/16, 31/14*

U.S. Cl. 435—19 **24 Claims**

1. Diagnostic agent for the detection of esterolytic and proteolytic enzymes in body fluids, which agent comprises at least one substrate, and adjuvants suitable for said substrate, and at least one activator, and wherein said substrate is a sulphonphthalein ester of the formula

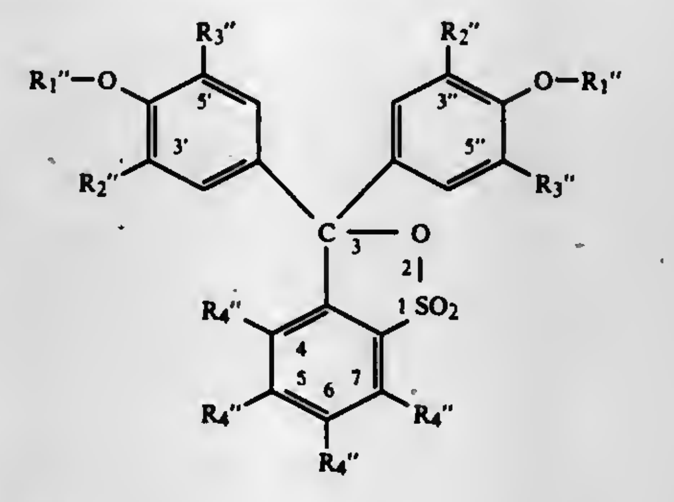

wherein

R_1'' is a carboxylic acid residue optionally substituted by halogen or a lower alkoxy radical or is an amino acid or peptide residue provided with a nitrogen protective group conventional in peptide chemistry;

R_2'' is a halogen atom or a lower alkyl radical; and

R_3'' and R_4'', which can be the same or different are hydrogen or halogen atoms; or an azo dyestuff ester of the formula

$$A'—N{=}N—B'(OR)_n$$

wherein

A' is a five- or six-membered, optionally benzo-annellated residue with one or two heteroatoms selected from nitrogen, sulfur and oxygen, which is optionally substituted one or more times by halogen, lower alkyl or lower alkoxy radicals or is a phenyl radical substituted one, two or three times by lower alkyl, lower alkoxy, nitro, sulphonato or acylamino radicals;

B' is a benzene, naphthalene or quinoline radical optionally substituted once or twice by sulphonato, lower alkoxy or lower alkoxypolyalkyleneoxy radicals;

R is a carboxylic acid residue or an amino acid or peptide residue provided with a nitrogen protective group conventional in peptide chemistry; and

n is 1 or 2; or an indoxyl ester of the formula

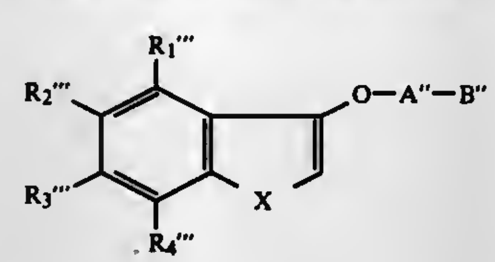

wherein

R_1''', R_2''', R_3''' and R_4''', which can be the same or different, are hydrogen or halogen atoms, lower alkyl, lower

alkoxy, aryl, aralkyl, aralkoxy, hydroxyl, carboxy, carboxy lower alkoxy, aralkoxycarbonyl, aralkoxycarbonyl lower alkoxy, nitro or lower acylamino radicals or in which two adjacent substituents represent a benzo-annellated residue optionally substituted by halogen;

X is a sulfur atom or an imino group optionally substituted by a lower alkyl, aryl, aralkyl or acyl radical;

A'' is an amino acid or peptide residue; and

B'' is a nitrogen protective group conventional in peptide chemistry or derived therefrom.

and said activator is selected from the following:

(a) pyridine derivatives of the general formula:

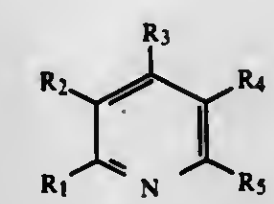

in which R_1, R_2, R_3, R_4 and R_5, which can be the same or different, are hydrogen or halogen atoms, lower alkyl or lower alkoxy radicals, vinyl radicals which are substituted by an aryl radical optionally substituted one or more times by lower alkoxy, amino, alkylamino or dialkylamino, or by a heterocyclic radical, whereby two adjacent substituents can represent an indeno- or benzo-annellated residue optionally substituted one or more times by halogen, hydroxyl, lower alkyl or lower alkoxy, which annellated residue can, in turn, carry a benzo- or pyrido-annellated residue optionally substituted by a lower alkyl radical and R_3 can also stand for a vinylquinuclidyl-carbinol radical;

(b) imidazole derivatives of the general formula:

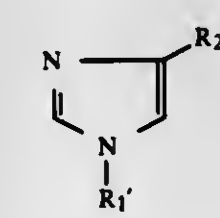

in which R_1' is a hydrogen atom, a lower alkyl radical or an aryl radical optionally substituted by a hydroxyl group or an acyl radical and R_2' is a hydrogen atom, an aminoalkyl, N-acylaminoalkyl or a lower aliphatic, optionally unsaturated carboxylic acid residue or a lower aliphatic α-amino acid residue optionally acylated on the nitrogen;

(c) alcohols of the general formula:

$$X—A—OH$$

in which X is a hydrogen atom or a hydroxyl group and A is a hydrocarbon radical;

(d) metal complexes of the general formula:

$$D_m[B(CN)_n(NO)_p]$$

in which D is an alkali metal ion, B is a heavy metal ion, m is 2, 3, 4 or 5, n is 4, 5, 6, 7 or 8 and p is 0 or 1, the number m being given by the valency of the heavy metal ion and the number n.

4,299,918

METHOD FOR MULTIPLE ANALYSES

Michel Popoff, Plaisir; Marie-Jose Brochon, Fontenay sous Bois, and Georges Brault, Savigny sur Orge, all of France, assignors to Institut Pasteur, Paris, France

Division of Ser. No. 922,340, Jul. 6, 1978, Pat. No. 4,237,096. This application Jul. 7, 1980, Ser. No. 166,104

Claims priority, application France, Jul. 6, 1977, 77 20846

Int. Cl.^{3} C12Q *1/24*

U.S. Cl. 435—30 **2 Claims**

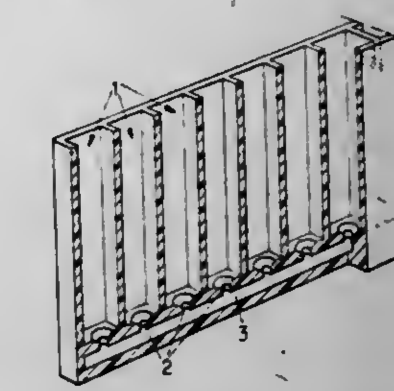

1. In a device for use in carrying out simultaneously multiple analysis reactions in a liquid medium, said device comprising an introduction compartment adapted to receive the liquid, separate analysis compartments, a distributing channel communicating said introduction compartment with said analysis compartments, valve-forming means provided in each analysis compartment capable of isolating liquid contained in the analysis compartment from liquid remaining in the distribution channel, each valve-forming means being constituted by a movable solid element positioning itself in resting position so as to close the communication between the analysis compartment and the distribution channel, and opening this same communication under the effect of movement of the liquid on introduction of the liquid into the introduction compartment, the method of analysis comprising introducing in a single operation or successively through the valve-forming means, the liquid intended to form the culture medium with the possible constituents present in the analysis compartments, and the inoculum under study.

4,299,919

PERFUSATE REDOX POTENTIAL CONTROLLER

Max Jellinek, Hazelwood, Mo., assignor to St. Louis University, St. Louis, Mo.

Filed Jun. 30, 1980, Ser. No. 164,770

Int. Cl.^{3} A01N *1/02*

U.S. Cl. 435—283 **19 Claims**

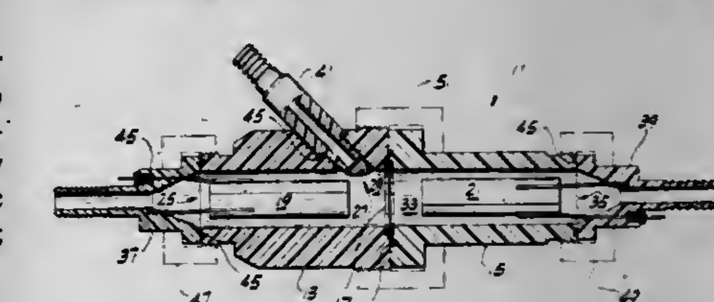

1. In a perfusion apparatus including an organ chamber, an oxygenator and a pump for pumping a perfusate through the apparatus, the improvement comprising means for controlling the redox potential of the perfusate for use in the preservation of organs comprising:

first and second cells, each having an opening for communication of fluid therebetween, said first cell also having first and second ports for ingress and egress of the perfusate into and out of said first cell;

a membrane disposed in the openings between the first and

second cells, said membrane having a submicron pore size, whereby electrical current can flow between the first and second cells but particles larger than the pore size cannot;
first and second electrodes disposed in the first and second cells respectively;
a reference electrode adapted to be in electrical contact with the perfusate; and
means for detecting the redox potential of the perfusate as measured against the reference electrode and for maintaining said redox potential at a predetermined level by causing current to flow between the first and second electrodes through said perfusate when the measured redox potential differs from the predetermined level.

4,299,920
BIOLOGICAL RECEPTACLE
J. Hinrich Peters, Lughauser Str. 70, 5064 Rosrath-Hoffnungsthal, Fed. Rep. of Germany
Filed Jan. 14, 1980, Ser. No. 111,759
Claims priority, application Fed. Rep. of Germany, Jan. 19, 1979, 2902026
Int. Cl.[3] C12M *3/04, 3/00*
U.S. Cl. 435—285 **11 Claims**

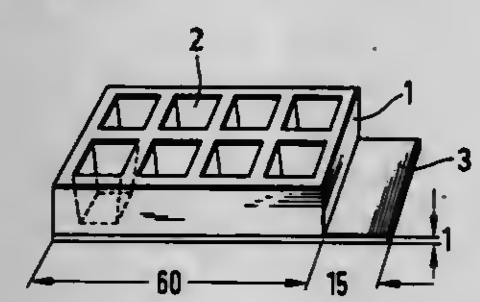

1. A receptacle containing a test medium such as a cell culture or biological specimen consisting of a base plate and wall member, the wall member having a flat smooth bottom self-adhering to the base plate in liquid-tight manner, the wall member being formed of noncytotoxic hydrophobic elastomeric synthetic material compatible with the test medium and defining with the base plate a plurality of independent chambers, and a plurality of test media in the independent chambers.

4,299,921
PROLONGED INCUBATION MICROBIOLOGICAL APPARATUS AND FILTER GASKETS THEREOF
Kamal A. Youssef, P.O. Box 6548, W. Palm Beach, Fla. 33405
Continuation-in-part of Ser. No. 25,461, Mar. 30, 1979, abandoned. This application Aug. 21, 1980, Ser. No. 180,031
Int. Cl.[3] C12M *1/22*
U.S. Cl. 435—298 **1 Claim**

1. An apparatus for the culture of aerobic or anaerobic organisms or tissue, comprising a dish member having an upstanding periphal wall and a cover provided with a downturned rim fitting over at least a part of said wall; a filter gasket for sealing the juncture between said wall, said cover and said rim, comprising a compressible open-called core, a microporous air permeable and particulate impermeable membrane on one side of said core adapted to adhere to the inside of said cover and to its rim, said core having on its other side a nonporous layer adapted to adhere to the cover of said dish; said gasket having also an external, substantially microscopic lubricating film to ensure sealing engagement between said dish and said cover.

4,299,922
METHOD FOR REGENERATING ANION EXCHANGE RESINS IN BICARBONATE FORM
Wolfgang Höll, Ettlingen; Karl-Ekkehard Sester, Oberkirch; Siegfried H. Eberle, Eggenstein, and Heinrich Sontheimer, Karlsruhe, all of Fed. Rep. of Germany, assignors to Kernforschungszentrum Karlsruhe, Gmbh, Karlsruhe, Fed. Rep. of Germany
Filed Nov. 26, 1979, Ser. No. 97,309
Claims priority, application Fed. Rep. of Germany, Nov. 25, 1978, 2851135; Sep. 13, 1979, 2937022
Int. Cl.[3] B01J *49/00*
U.S. Cl. 521—26 **8 Claims**

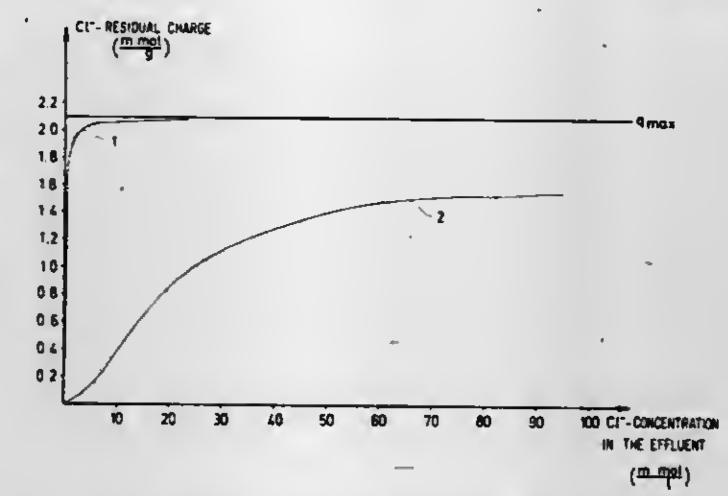

1. Process for regenerating to a bicarbonate form, a charged ion exchange resin which is present in aqueous suspension and used for the removal of strong acid ions from water, and which after regeneration is separated from an effluent formed during the regeneration and reused, the regeneration being conducted by contacting the charged resin with an aqueous treating medium which forms an aqueous suspension with the resin, comprising:
(a) providing in the aqueous suspension a quantity of calcium carbonate in excess of that which is necessary to maintain solid calcium carbonate in the resin suspension during the entire period of the regeneration, with the pH of the resin suspension during the regeneration being at about 5 to about 7; and
(b) simultaneously introducing into the aqueous suspension carbon dioxide, with the partial pressure of the carbon dioxide above the resin suspension being maintained at between about 5×10^{-3} MPa and about 1.0 MPa, during the period of the regeneration, wherein the concentration of bicarbonate ion in the resin suspension is kept constant during the entire period of the regeneration.

4,299,923
ALKYL-MODIFIED SILOXANE COPOLYMERS USEFUL AS FOAM STABILIZERS IN HIGH RESILIENCE POLYURETHANE FOAM
Feyyaz O. Baskent, Mahopac, N.Y., and James D. Reedy, New Fairfield, Conn., assignors to Union Carbide Corporation, New York, N.Y.
Filed Mar. 27, 1980, Ser. No. 134,637
Int. Cl.[3] C08G *18/14, 18/63, 18/24*
U.S. Cl. 521—110 **19 Claims**

1. An organosiloxane copolymer selected from the group consisting of: (a) an organosiloxane copolymer having the average formula

$$Me_3SiO(Me_2SiO)_n(\underset{\displaystyle R}{\underset{|}{MeSiO}})_pSiMe_3 \qquad (I)$$

wherein: Me is a methyl group, R is an alkyl group having from five to twenty carbon atoms inclusive, n has an average value from one to four inclusive, p has an average value from one to two inclusive, and the ratio of n to p has a value from one to three inclusive; and (b) an organosiloxane copolymer having the average formula

$$R'Me_2SiO(Me_2SiO)_nSiMe_2R' \qquad (II)$$

wherein: Me is a methyl group, R' is an alkyl group having from five to twenty carbon atoms inclusive, and n has an average value from 0 to 8 inclusive with the proviso that the R' groups represent from 20 to 45 weight percent of the organosiloxane copolymer.

16. A process for producing high resilience polyurethane foam having a density of no greater than 2.0 pounds per cubic foot which comprises simultaneously reacting and foaming a reaction mixture containing: (a) an organic polyol selected from the group consisting of (i) a polyether triol containing at least 40 mole percent primary hydroxyl groups and having a molecular weight from about 2,000 to about 8,000 and (ii) a mixture of said polyether triol and other polyethers having an average of at least two hydroxyl groups, said polyether triol of said mixture amounting to at least 40 weight percent of the total polyol content; (b) a polyisocyanate, said organic polyol and said polyisocyanate being present in the mixture in a major amount and in a relative amount required to produce the polyurethane foam; (s) a blowing agent in a minor amount sufficient to foam the reaction mixture; (d) a catalytic amount of catalysts for the production of polyurethane foam; and (e) an organosiloxane copolymer as claimed in claim 1.

4,299,924
POLYISOCYANURATE RESIN AND PROCESS FOR MAKING THE SAME
Takao Nomura, Toyota; Yoshio Taguchi, Atsuta; Kozaburo Nagata, Kusatsu, and Takuji Isaka, Kyoto, all of Japan, assignors to Toyota Jidosha Kogyo Kabushiki Kaisha, Toyota and Sanyo Chemical Ind., Ltd., Kyoto, both of, Japan
Filed Jul. 17, 1980, Ser. No. 169,809
Claims priority, application Japan, Aug. 10, 1979, 54/102647; Nov. 9, 1979, 54/145625; Jun. 6, 1980, 55/76962; Jun. 6, 1980, 55/76963
Int. Cl.[3] C08G *18/14*
U.S. Cl. 521—131 **27 Claims**

1. A process for producing a cellular or noncellular polyisocyanurate resin, which comprises reacting an organic polyisocyanate with at least one high-molecular weight polyhydroxyl compound with or without a cross-linker, in the presence of trimerization catalyst, in the presence of or in the absence of a blowing agent, wherein (1) at least a part of said polyhydroxyl compound is a polymer polyol derived from a high-molecular weight polyol having a molecular weight of at least 4500 and an ethylenically unsaturated monomer, (2) isocyanate index is 200–5000, and (3) the resin has a density of at least 0.5 g/cm^3.

4,299,925
RESIN FOAMS
Dennis H. Ogden, Wolverhampton, England, assignor to British Industrial Plastics Limited, Manchester, England
Filed Oct. 11, 1977, Ser. No. 841,587
Int. Cl.[3] C08G *12/12*
U.S. Cl. 521—188 **5 Claims**

1. A process for the production from a urea-formaldehyde resin of a cured foam of dry density not more than about 20 kg/m^3, comprising
(a) forming a first foam from an aqueous surfactant-containing solution of a hardener for said resin;
(b) introducing said first foam and a viscous aqueous solution of said resin into a mixing zone to form a mixture thereof;
(c) subjecting the thus-produced mixture, downstream of said mixing zone, to mechanical agitation to form a homogeneous wet second foam;

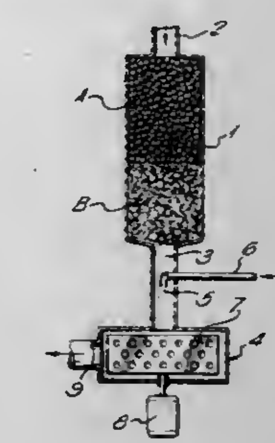

the reactive resin solids content of the viscous aqueous solution set forth in (b) being selected so as to yield said homogeneous wet second foam in a form having a total reactive resin solids content of at least 35% by weight, whereby the cured foam produced on curing of said second foam exhibits a shrinkage on drying of less than 20% by volume.

4,299,926
POLYMERIC LIGHT STABILIZERS FOR PLASTICS
Jean Rody, Basel, and Michael Rasberger, Riehen, both of Switzerland, assignors to Ciba-Geigy Corporation, Ardsley, N.Y.
Division of Ser. No. 966,041, Dec. 4, 1978, Pat. No. 4,260,689, which is a division of Ser. No. 896,676, Apr. 14, 1978, abandoned, which is a continuation of Ser. No. 793,708, May 4, 1977, abandoned. This application Aug. 5, 1980, Ser. No. 175,689
Claims priority, application Switzerland, May 11, 1976, 5890/76
Int. Cl.[3] C08G *73/02*
U.S. Cl. 525—55 **25 Claims**

1. A polyamine of the formula

$$\left[NY-A-NY-F\right]_n$$

wherein A represents a divalent radical of the formulae XXXI to XXXIX,

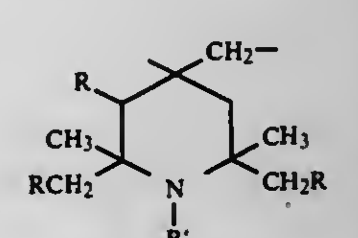

XXXI

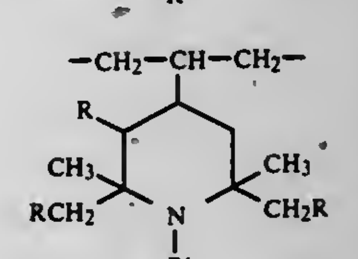

XXXII

-continued

XXXIII

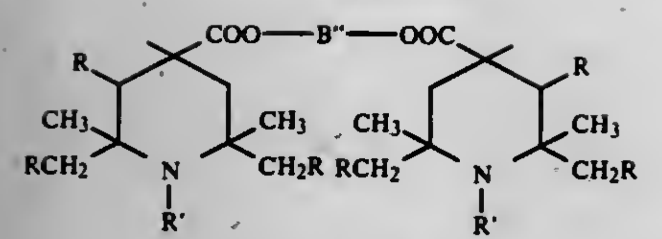

XXXIV

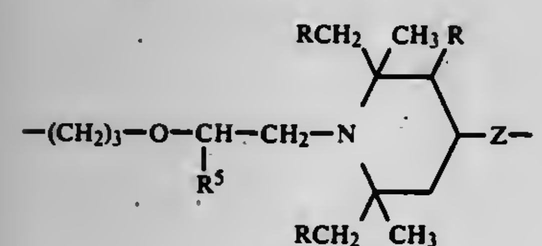

XXXV

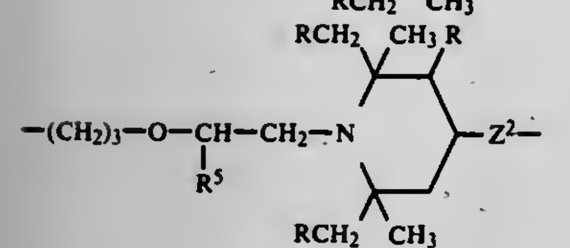

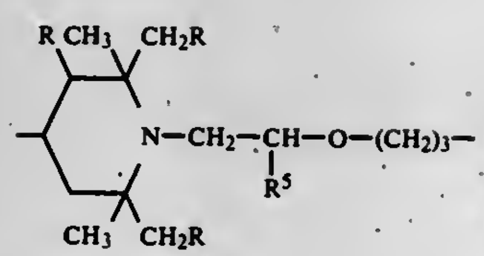

XXXVI

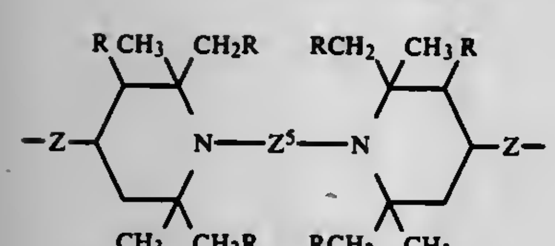

XXXVII

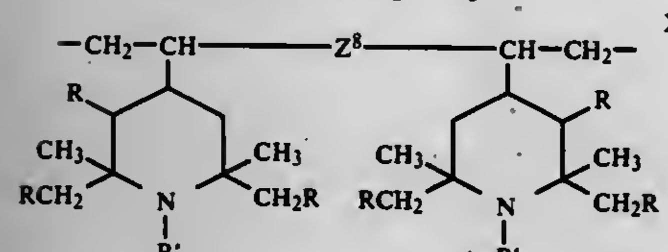

XXXVIII

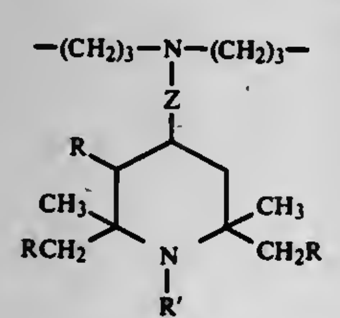

-continued

XXXIX

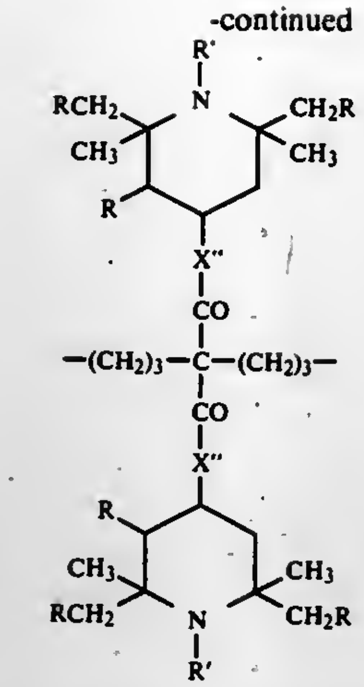

in which R represents hydrogen or alkyl of 1-5 C atoms, R' represents hydrogen, alkyl of 1-12 C atoms, allyl, benzyl, acetyl, acryloyl or crotonyl, X'' is oxygen or NH, Z represents a direct bond, $—CH_2CH_2—$ or $—OCH_2CH_2CH_2—$, Z^2 represents one of the radicals —N(R'')—, $—NR^3—CO—NR^3—$, $—NR^3—CO—CO—NR^3—$, $—NR^3—CO—Z^3—CO—NR^3—$, alkylene of 4-10 C atoms, p-xylylene,

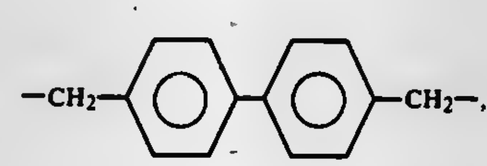

-O-alkylene-O- of 1-10 C atoms, -O-alkenylene-O- of 4-8 C atoms or -O-xylylene-O-, in which R^3 represents hydrogen, alkyl of 1-12 C atoms, cyclohexyl, benzyl or aryl of 6-14 C atoms, R'' represents alkanoyl of 1-8 C atoms or alkenoyl of 3-5 C atoms and Z^3 represents alkylene of 1-10 C atoms or phenylene, B'' represents an alkylene radical of 2-12 C atoms, an alkenylene radical of 4-8 C atoms, a xylylene or hexahydroxylylene radical, a cyclohexylene radical or a radical of the formula $—CH_2CH_2OCH_2CH_2—$ or $—CH_2CH_2O$-phenylene-OCH_2CH_2-, R^5 is hydrogen, methyl or phenyl, Z^5 represents alkylene or alkenylene of 4-8 C atoms, p-xylylene or a group of the formula

$$-CH_2-\overset{R^5}{\overset{|}{C}H}-O-CO-NH-Z^7-NH-CO-O-\overset{R^5}{\overset{|}{C}H}-CH_2-$$

or

$$-CH_2-\overset{R^5}{\overset{|}{C}H}-O-Z^{7'}-O-\overset{R^5}{\overset{|}{C}H}-CH_2-$$

wherein R^5 is as previously defined, Z^7 is alkylene of 2-12 C atoms, arylene of 6-12 C atoms, 4,4'-dicyclohexylenemethane or a radical -phenylene-Z^4-phenylene- in which Z^4 represents $—CH_2—$, $C(CH_3)_2$, —O— or $—SO_2—$, $Z^{7'}$ represents alkylene or alkenylene of 4-8 C atoms or p-xylylene and Z^8 represents an alkylene radical of 1-6 C atoms or phenylene, Y represents hydrogen, alkyl of 1-12 C atoms, cyclohexyl, benzyl, or a polyalkylpiperidine radical of the formula

VIII

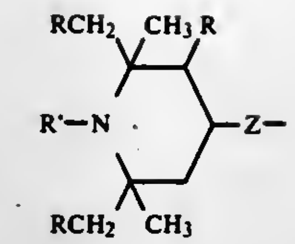

wherein R, R' and Z are as previously defined and F is alkylene of 4-8 C atoms, xylylene, hexahydroxylylene or one of the radicals

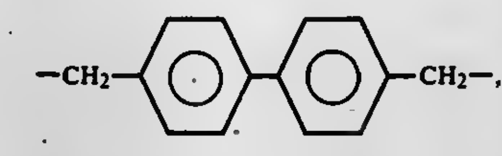

$—CH_2—CH(OH)—CH_2—$, $—CH_2—CH(OH)—CH_2—O—Z^{10}—O—CH_2—CH(OH)—CH_2—$ or $—CH_2CH_2—O—CH_2CH_2—$ in which Z^{10} represents alkylene of 2-6 C atoms, $—CH_2CH_2—O—CH_2CH_2—$, cyclohexylene, phenylene or

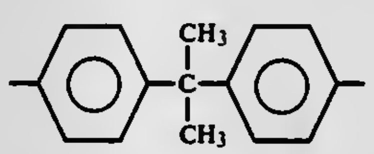

and n denotes a value of from 2 to about 50.

4,299,927

MOLDING COMPOSITIONS

John R. Dombroski, Kingsport, Tenn., assignor to Eastman Kodak Company, Rochester, N.Y.
Filed May 5, 1980, Ser. No. 146,893
Int. Cl.³ C08L *51/00*
U.S. Cl. 525—64 **8 Claims**

1. Polymer composition comprising the reaction product of
(a) from about 50 to about 90% by weight of an ethylenically unsaturated polyester derived from an α,β-ethylenically unsaturated dicarboxylic acid with a saturated aliphatic polyol,
(b) from about 50 to about 10% by weight of a modified polyolefin derived from an α,β-ethylenically unsaturated dicarboxylic acid anhydride and a polyolefin, and
(c) from about 0.1 to about 10 percent by weight of succinic anhydride of the formula

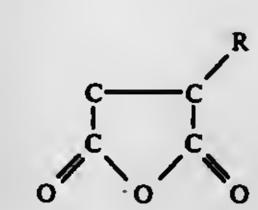

wherein R is an alkyl or alkenyl group having from 4 to 22 carbon atoms.

4,299,928

IMPACT MODIFIED POLYCARBONATES

Mark W. Witman, New Martinsville, W. Va., assignor to Mobay Chemical Corporation, Pittsburgh, Pa.
Filed Mar. 14, 1980, Ser. No. 130,288
Int. Cl.³ C08L *51/00, 69/00*
U.S. Cl. 525—67 **5 Claims**

1. A composition comprising a blend of about 80 to 99 percent by weight of an aromatic polycarbonate thermoplastic resin and about 1 to 20 percent by weight of a multiphase composite interpolymer comprising:
(a) about 25 to 95 percent by weight of a first elastomeric phase polymerized from a monomer system comprising about 75 to 99.8 percent by weight n-butyl acrylate, 0.1 to 5 percent by weight cross-linking member, 0.1 to 5 percent by weight graft-linking monomer, and
(b) about 75 to 5 percent of a second rigid thermoplastic phase polymerized in the presence of said elastomeric phase.

4,299,929

THERMOPLASTIC RESIN COMPOSITION EXCELLENT IN DWELLING THERMAL STABILITY

Hajime Sakano, Osaka; Mikio Kodama, Nagisasakae; Akitoshi Ito, Osaka, and Miyuki Terada, Amagasaki, all of Japan, assignors to Sumitomo Naugatuck Co., Ltd., Osaka, Japan
Filed Jul. 15, 1980, Ser. No. 169,090
Claims priority, application Japan, Mar. 19, 1980, 55-35668
Int. Cl.³ C08L *55/02, 51/04*
U.S. Cl. 525—67 **4 Claims**

1. A thermoplastic resin composition with excellent dwelling thermal stability which comprises 100 parts by weight of a resin composition comprising a polymer (A) obtained by polymerization of at least two kinds of monomers selected from the group consisting of aromatic vinyl compounds, vinyl cyanide compounds and carboxylic acid alkyl esters in the presence of a conjugated diene rubber and a polycarbonate resin (B) in a weight proportion of from 10:90 to 90:10 and 0.05 to 5.0 parts by weight of at least one acid compound (C) chosen from inorganic acids, organic acids, maleic anhydride and phthalic anhydride.

4,299,930

MULTI-COMPONENT HOT MELT ADHESIVES HAVING EXCELLENT HIGH TEMPERATURE PROPERTIES

Brenda J. Boggs, Longview, Tex., assignor to Eastman Kodak Company, Rochester, N.Y.
Filed Apr. 7, 1980, Ser. No. 138,048
Int. Cl.³ C08L *23/26, 31/04*
U.S. Cl. 525—74 **8 Claims**

1. An adhesive composition capable of being used as a hot melt adhesive comprising a blend of
(a) about 40 to 50 percent by weight of at least one modified polyethylene having a saponification number of about 3 to 60 prepared by reacting polyethylene with an unsaturated polycarboxylic acid, anhydride or ester thereof,
(b) about 6 to 10 percent by weight of at least one ethylenevinyl acetate copolymer,
(c) about 50 to 30 percent by weight of at least one tackifier resin selected from the group consisting of hydrocarbon resin, polyterpene resin and rosin ester resin, and
(d) about 7 to 15 percent by weight of an ethylene/propylene rubber.

4,299,931

COMPATIBILIZED POLYMER BLENDS

Aubert Y. Coran, and Raman Patel, both of Akron, Ohio, assignors to Monsanto Company, St. Louis, Mo.
Filed Mar. 10, 1980, Ser. No. 128,704
Int. Cl.³ C08F *8/00;* C09L *53/00*
U.S. Cl. 525—95 **31 Claims**

1. A compatibilized polymer composition comprising a blend of thermoplastic olefin polymer, nitrile rubber having an average molecular weight of 50,000 or more, and, in a compatibilization enhancing amount, a block copolymer comprising at least one nitrile rubber compatibilizing segment and at least one olefin polymer compatibilizing segment.

4,299,932

AMINE TERMINATED POLYMERS AND THE FORMATION OF BLOCK COPOLYMERS

William L. Hergenrother; Richard A. Schwarz; Richard J. Ambrose, all of Akron, and Robert A. Hayes, Cuyahoga Falls, all of Ohio, assignors to The Firestone Tire & Rubber Company, Akron, Ohio

Division of Ser. No. 848,962, Nov. 7, 1977, Pat. No. 4,151,222, and a continuation-in-part of Ser. No. 574,676, May 5, 1975, Pat. No. 4,070,344. This application Mar. 5, 1979, Ser. No. 17,789

Int. Cl.³ C08L *75/04, 9/06*

U.S. Cl. 525—130 **16 Claims**

1. A urethane-urea block copolymer composition, comprising:

an amine terminated polymer connected to a urethane-urea polymer constituent to form the urethane-urea block copolymer;

said amine terminated polymer being an end capped polymer formed by the reaction of an anionically prepared polymer and a single polyisocyanate or polyisothiocyanate compound so that at least one unreacted isocyanate or isothiocyanate end portion exists wherein said unreacted isocyanate or isothiocyanate end portion has been converted to an amine group;

said polymer being a homopolymer or a copolymer, said homopolymer made from monomers selected from the class consisting of conjugated diene, vinyl substituted aromatic, vinyl substituted pyridine, vinyl substituted quinoline, and a compound selected from the class consisting of

1. $CH_2{=}CACN$ wherein A is CN, CF_3, CH_3 or H;
2. $CH_2{=}CACO_2R$ wherein A is CO_2R, SO_2R, CH_3 or H;
3. $CH_2{=}CANO_2$ wherein A is Cl, CH_3 or H;
4. $CH_2{=}CACON(R)_2$ wherein A is CH_3 or H;

wherein

R is a 1 to 15 carbon atom alkyl, a 4 to 15 carbon atom cycloalkyl, an aromatic, a 1 to 15 carbon atom alkyl substituted aromatic, a 4 to 15 carbon atom cycloalkyl substituted aromatic, or hydrogen,

said copolymer made from monomers of conjugated dienes and vinyl substituted aromatics;

said polyisocyanate and said polyisothiocyanate having the formula

$$R(N{=}C{=}X)_n$$

wherein

R is an aliphatic containing from 2 to about 20 carbon atoms, a cycloaliphatic containing from 4 to about 20 carbon atoms, an aromatic containing from 6 to about 20 carbon atoms, and combinations thereof, n is an integer of 2 or 3 and X is selected from the class consisting of oxygen and sulfur;

said urethane-urea polymer constituent being the reaction product of polyisocyanates with polyhydroxy compounds and diamines;

said urethane-urea forming polyisocyanate monomers having the formula

$$R(N{=}C{=}X)_n$$

wherein

R is an aliphatic containing from 2 to about 20 carbon atoms, a cycloaliphatic containing from 4 to about 20 carbon atoms, an aromatic containing from 6 to about 20 carbon atoms, and combinations thereof, n is an integer of 2 or 3 and X is selected from the class consisting of oxygen or sulfur; and

said polyhydroxy compound having at least two hydroxyl groups thereon.

4,299,933

POLYESTER ADHESIVES

Richard L. McConnell; Jimmy R. Trotter, and Bobby J. Sublett, all of Kingsport, Tenn., assignors to Eastman Kodak Company, Rochester, N.Y.

Filed Jun. 2, 1980, Ser. No. 155,807

Int. Cl.³ C08L *67/00*

U.S. Cl. 525—170 **12 Claims**

1. A composition comprising a copolyester of

(A) at least one aromatic or saturated aliphatic or cycloaliphatic dibasic acid having 4 to 36 carbon atoms.

(B) from about 2 to about 40%, based on the weight of the copolyester, of a carboxylated polyolefin selected from the group consisting of (1) oxidized polyolefins and (2) the reaction product of

(a) at least one homo or copolymer of an α-olefin having from 2 to 10 carbon atoms and

(b) at least one unsaturated acid or anhydride having from 3 to 5 carbon atoms or a 1 to 10 carbon atom alkyl ester thereof, and

(C) at least one saturated aliphatic or cycloaliphatic glycol having from 2 to 12 carbon atoms, and

said copolyester having a crystalline melting point of about 70°-200° C. and an I.V. of about 0.2-1.6.

4,299,934

HOT MELT ADHESIVE COMPOSITION

Frederick D. Petke, and Richard L. McConnell, both of Kingsport, Tenn., assignors to Eastman Kodak Company, Rochester, N.Y.

Filed Oct. 2, 1980, Ser. No. 193,064

Int. Cl.³ C08L *67/00*

U.S. Cl. 525—173 **10 Claims**

1. Hot melt adhesive composition comprising

(a) about 50-99% by weight of the composition, of a copolyester derived from at least 40 mole % terephthalic acid, and at least 60 mole % 1,6-hexanediol, said copolyester having an I.V. of about 0.45-1.2, and

(b) about 50-1% by weight of the composition of a vinyl aromatic polymer of which at least 50% by weight of its polymeric units are derived from at least one monomer having the formula

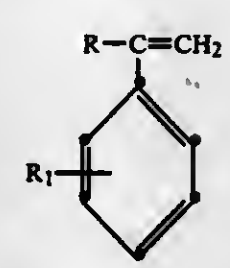

wherein R is hydrogen or an alkyl group containing 1 to 4 carbon atoms and R_1 is hydrogen, chlorine, phenyl or an alkyl group containing 1 to 4 carbon atoms, said vinyl aromatic polymer having an I.V. of about 0.03-0.27.

4,299,935

PROCESS FOR BULK POLYMERIZATION

Jean Chatelain, Lyons, France, assignor to Rhone-Progil, Paris, France

Continuation of Ser. No. 660,762, Feb. 23, 1976, abandoned, which is a continuation of Ser. No. 447,951, Mar. 4, 1974, abandoned, which is a division of Ser. No. 269,021, Jul. 5, 1972, abandooed. This application Apr. 23, 1979, Ser. No. 32,279

Claims priority, application France, Jul. 8, 1971, 71 24990

Int. Cl.³ C08F *2/02, 14/06*

U.S. Cl. 526—88 **5 Claims**

1. In a process for bulk polymerization of a monomeric composition based on vinyl chloride which produces a polymer insoluble in the monomer whereby the reaction medium converts from a liquid phase to a solid powdered phase during

the polymerization reaction, conducting the final polymerization wherein the polymerizable material converts from a liquid phase to a solid powdered phase in a horizontally disposed autoclave of cylindrical shape having stub shafts mounted for rotational movement along the axis of the autoclave, with the ends thereof extending a short distance into the autoclave, mixing the polymerizable material during final polymerization in the autoclave by engaging the material with equally circumferentially spaced apart half frame members which extend substantially throughout the length of the autoclave and are connected at their opposite ends to the stub shafts for rotational movement therewith about a cylindrical path adjacent the cylindrical walls of the autoclave, engaging the material with axially spaced sets of first bracing members which extend

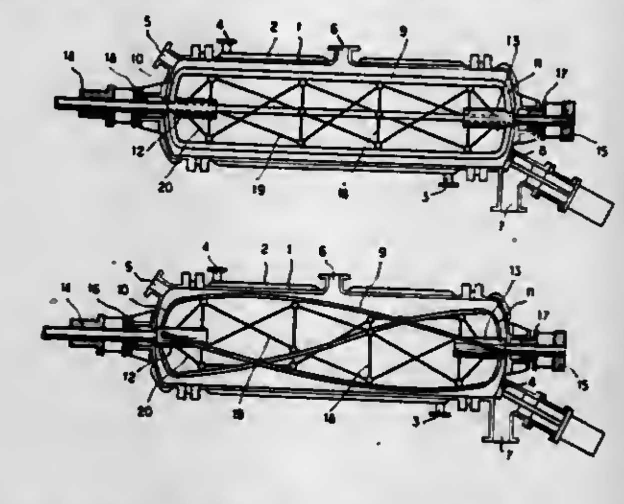

between adjacent half frame members in a plane normal to the axis of the autoclave whereby such bracing members are disposed in the outer peripheral zones of the autoclave, engaging the material with second bracing members which extend angularly in sequence from the end portions of each first bracing member adjacent its point of connection to a frame member to the end portions of first bracing members of adjacent sets at their points of connection with adjacent frame members, whereby said first and second bracing members are disposed in outer peripheral zones of the autoclave where the displacement speed of the polymerizable material is high and whereby the area defined by the central axial portion of the autoclave between the stub shafts is substantially free of any axial shaft or other members having little movement relative to the material.

4,299,936

SUPPORTED ARENE COMPLEX OLEFIN CATALYSIS

John P. Candlin, Aston near Stevenage; Keith C. Wilson, St. Albans, and Ronald Pearce, Runcorn, all of England, assignors to Imperial Chemical Industries Limited, London, England

Division of Ser. No. 744,827, Nov. 24, 1976, Pat. No. 4,121,030. This application Aug. 7, 1978, Ser. No. 931,731

Claims priority, application United Kingdom, Nov. 25, 1975, 48406/75

Int. Cl.³ C08F *4/02, 4/64, 4/76, 10/06*

U.S. Cl. 526—119 **24 Claims**

1. A process for the production of a hydrocarbon polymer wherein at least one ethylenically unsaturated hydrocarbon monomer is contacted with a polymerization catalyst which contains a compound of a transition metal, other than zirconium, of Group IVA of the Periodic Table, wherein the said compound contains at least one π-bonded arene group, and is supported on a particulate inorganic compound which is (A) an inorganic oxide, an inorganic hydroxide, an inorganic oxyhalide, an inorganic hydroxyhalide or an inorganic halide; (B) a mixture of at least two compounds from (A); or (C) a compound obtained by the reaction of at least two compounds from (A).

19. A solid polypropylene polymer having a melt flow index (measured at 190° C. using a 10 kg weight) of not greater than 0.02, and containing at least three head-to-head units for each 100 propylene units.

4,299,937

PROCESS FOR THE POLYMERIZATION OF PROPYLENE

Alfred Columberg, Geneva, Switzerland, assignor to Battelle Memorial Institute, Carouge-Geneva, Switzerland

Continuation of Ser. No. 796,234, May 12, 1977, Pat. No. 4,191,816. This application Sep. 20, 1979, Ser. No. 77,330

Claims priority, application Switzerland, May 14, 1976, 6057/76

The portion of the term of this patent subsequent to Mar. 4, 1997, has been disclaimed.

Int. Cl.³ C08F *4/02, 10/06*

U.S. Cl. 526—124 **4 Claims**

1. A process for the polymerization of propylene comprising the following steps:

(1) heating, while mixing and milling, for 10-30 hours at 70°-100° C. in the absence of air and moisture, at least one supporting compound selected from the group consisting of aluminum acetate, aluminum hydroxide and aluminum acetylacetonate with a mixture of acetic acid and acetic anhydride to obtain a solid product and then eliminating under heat and reduced pressure the volatile portions of the solid product;

(2) forming a homogeneous solution or dispersion of said solid product in a non-polar dry hydrocarbon solvent and adding thereto, while mixing, $TiCl_3$ for activation and heating the mixture to obtain a homogeneous solution or dispersion of an activated catalyst;

(3) polymerizing propylene by admixing the activated catalyst, the propylene and a metal-organic compound of formula $Al_nR_yX_{(3n-y)}$ wherein R is an alkyl group, X is a halogen, n is 1 or 2, y is an integer not exceeding 3 when n=1 and equal to 1, 3 or 5 when n=2, in a non-polar hydrocarbon at 20°-70° C. under a pressure of 2-50 atmospheres.

4,299,938

PHOTOPOLYMERIZABLE AND THERMALLY POLYMERIZABLE COMPOSITIONS

George E. Green, Stapleford, and Edward Irving, Burwell, both of England, assignors to Ciba-Geigy Corporation, Ardsley, N.Y.

Filed Jun. 9, 1980, Ser. No. 157,766

Claims priority, application United Kingdom, Jun. 19, 1979, 21380/79; Feb. 27, 1980, 6626/80

Int. Cl.³ C08F *4/00;* **C08G** *8/10, 12/12, 59/68*

U.S. Cl. 526—192 **10 Claims**

1. Compositions comprising

(a) a compound, or mixture of compounds, capable of being transformed into a higher-molecular weight material under the influence of a cationic catalyst, and

(b) an effective amount of an aryloxysulfoxonium salt of the formula

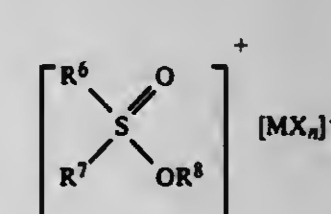

VI

where

either R^6 and R^7 each denote

(i) an alkyl group of 1 to 6 carbon atoms, which may be substituted by a halogen atom and which may be interrupted in the chain by an ether oxygen atom or a sulphonyl group,

(ii) an aryl group of 6 to 15 carbon atoms, or

(iii) an aryloxy group of 6 to 15 carbon atoms, or R^6 and R^7 together denote a divalent group of 4 to 10 carbon atoms forming with the indicated sulfur atom a heterocyclic radical,

R^8 denotes an aryl group of 6 to 15 carbon atoms,

M denotes an atom of a metal or metalloid,
X denotes a halogen atom, and
n is 4, 5, or 6 and is one more than the valency of M.

7. A composition according to claim 1, wherein (a) is a 1,2-epoxide, a vinyl monomer or prepolymer, an aminoplast, or a phenoplast.

4,299,939

HOMOPOLYMERS AND COPOLYMERS OF 2-ALKENYLIMIDAZOLE OR ITS 1,3-DIALKYL-2-ALKENYLIMIDAZOLIUM SALTS

Hans P. Panzer, Stamford; Alan S. Rothenberg, East Norwalk, and Paul F. Cutrufello, Bridgeport, all of Conn., assignors to American Cyanamid Company, Stamford, Conn.

Filed Jun. 30, 1980, Ser. No. 163,916

Int. Cl.³ C08F *26/06*

U.S. Cl. 526—258 **9 Claims**

1. A homopolymer containing 1,3-dialkyl-2-alkenylimidazolium salt monomers wherein the 1,3-dialkyl-2-alkenylimidazolium salt monomer is of the general structure:

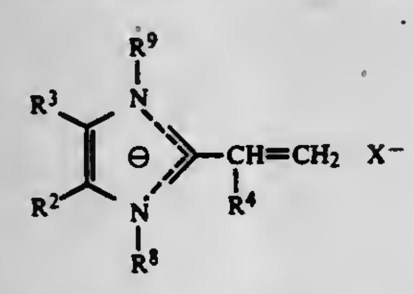

wherein R^2 and R^3 are individually selected from the group consisting of hydrogen, a saturated aliphatic radical having one to five carbon atoms, inclusive, and phenyl; R^4 is hydrogen or methyl; R^8 and R^9 are individually selected from the group consisting of a saturated aliphatic or hydroxyaliphatic radical having one to five carbon atoms, inclusive, and an aryl radical having six to ten carbon atoms, inclusive; and X is a negative salt-forming ion.

4,299,940

PROCESS FOR THE CONTROL OF FREE RADICAL POLYMERIZATION

Chung H. Wei, Bolton, Mass., assignor to Stauffer Chemical Company, Westport, Conn.

Filed Dec. 27, 1979, Ser. No. 108,188

Int. Cl.³ C08F *214/06, 230/02*

U.S. Cl. 526—278 **9 Claims**

1. In a process for the emulsion copolymerization of a reaction mixture comprising a monomer charge having from about 70 to about 90 weight percent vinyl chloride monomer, from about 5 to about 15 weight percent of a bis(hydrocarbyl)vinylphosphonate monomer, and the balance of the monomer charge substantially vinyl acetate, by free radical means the improvement comprising the addition of from about 0.0005 percent to about 0.1 percent of the weight of the monomer charge of a copolymerizable compound having a Q-value greater than 0.9 and an e-value more negative than −0.5 to control the viscosity of the reaction mixture.

4,299,941

PROCESS FOR PRODUCING AQUEOUS EMULSIONS OF VINYL CHLORIDE/VINYL ESTER/ETHYLENE COPOLYMER

Shizuo Narisawa, and Takeo Oyamada, both of Ichihara, Japan, assignors to Sumitomo Chemical Company, Limited, Osaka, Japan

Filed Sep. 24, 1979, Ser. No. 78,138

Claims priority, application Japan, Sep. 26, 1978, 53-118979; Jun. 20, 1979, 54-78603

Int. Cl.³ C08F *222/28, 222/26*

U.S. Cl. 526—273 **7 Claims**

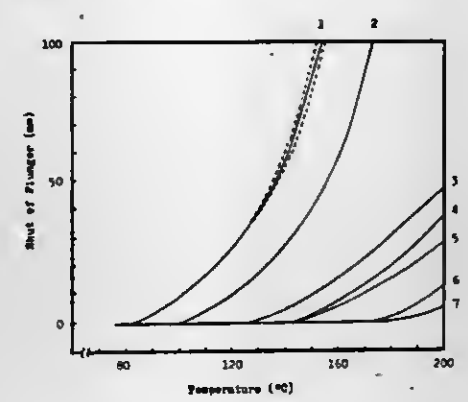

1. In a process for producing a stable aqueous emulsion of a vinyl chloride/vinyl ester/ethylene copolymer having less coarse particles and having a small heat fluidity and an excellent strength without adversely affecting its basic characteristics, including the water resistance, the alkali resistance, the fire retardant properties and the chemical resistance thereof, comprising copolymerizing vinyl chloride, a vinyl ester and ethylene in the presence of an emulsion-dispersing agent and a radical polymerization initiator, under an ethylene pressure, the improvement which comprises,

dissolving a polybasic acid polyallyl ester selected from the group consisting of diallyl phthalate, diallyl isophthalate, diallyl terephthalate, diallyl maleate, diallyl itaconate, diallyl succinate, dially adipate and triallyl benzenetricarboxylate in the vinyl chloride and/or vinyl ester to be copolymerized in an amount of 0.1 to 1.0% by weight based on the total weight of the vinyl chloride and vinyl ester, and continuously adding the solution to the polymerization system during the polymerization reaction, and continuously adding at least 60% by weight of the vinyl chloride and vinyl ester to the polymerization system during the polymerization reaction,

to give an aqueous emulsion of a vinyl chloride/vinyl ester/ethylene copolymer comprising 20 to 75% by weight of vinyl chloride, 15 to 70% by weight of the vinyl ester and 5 to 30% by weight of ethylene and containing 5 to 60% by weight of a benzene-insoluble part.

4,299,942

ADHESIVE COMPOSITION

Gerhard Piestert, Schriesheim, and Heinz G. Gilch, Bad Homburg, both of Fed. Rep. of Germany, assignors to USM Corporation, Farmington, Conn.

Filed Oct. 29, 1979, Ser. No. 88,869

Claims priority, application United Kingdom, Nov. 6, 1978, 43384/78

Int. Cl.³ C08F *20/08, 20/20*

U.S. Cl. 526—323.1 **11 Claims**

1. An adhesive composition comprising liquid polymerizable polyfunctional acrylate or methacrylate monomer(s), a source of free radicals effective under bond forming conditions to initiate polymerization of the monomer(s), an adhesion promoter material corresponding to a condensation product of reactants comprising acrylic acid or methacrylic acid or a derivative thereof and pyromellitic acid dianhydride or a derivative thereof to provide a polyacrylate or polymethacrylate compound having carboxylic acid groups pendant on pyromellitic acid dianhydride residues of the molecular chain and said material being present in an amount up to about 15 parts by weight per hundred parts by weight of the polymerizable monomer(s), the composition also comprising up to about 15 parts by weight per hundred parts by weight of the polymerizable monomer(s) of a compatible elastomer.

4,299,943

NONAQUEOUS PREPARATION OF LAYERED OR AMORPHOUS ORGANOMETALLIC INORGANIC POLYMERS

Peter M. DiGiacomo, Mission Viejo, and Martin B. Dines, Santa Ana, both of Calif., assignors to Occidental Research Corporation, Irvine, Calif.

Filed Mar. 25, 1980, Ser. No. 133,859

Int. Cl.³ C08G *67/00, 79/00*

U.S. Cl. 528—9 **14 Claims**

1. A process for the production of a solid polymeric compound having basic structural units of the formula:

$$M(O_3ZO_xR)_n$$

wherein M is at least one tetravalent metal, Z is a pentavalent metal and R is at least one organo group covalently coupled to the pentavalent metal and selected from the group consisting of acyclic, alicyclic, heteroacyclic, heterocyclic and aromatic groups, X is 0 or 1 and n is 2 provided that n is 1 when R is terminated with a tri- or tetra-oxy pentavalent metal, the process comprising reacting in a non-hydroxylic organic solvent at least one diester of an organo-substituted pentavalent metal acid of the formula:

$$((R'O)_2OZ)_nR$$

wherein n is 1 or 2, R' is a silyl group and Z and R are defined as above, with at least one tetravalent metal ion to precipitate the solid compound.

4,299,944

PROCESS FOR PRODUCING EPIHALOHYDRIN COPOLYMER RUBBER

Akio Maeda; Tatuo Usui, and Atsushi Yasuda, all of Yokohama, Japan, assignors to Nippon Zeon Co. Ltd., Tokyo, Japan

Filed Jan. 25, 1980, Ser. No. 162,891

Claims priority, application Japan, Jan. 26, 1979, 54-80556

Int. Cl.³ C08G *65/12, 65/14, 65/24*

U.S. Cl. 528—89 **9 Claims**

1. A process for producing an epihalohydrin copolymer rubber, which comprises copolymerizing an epihalohydrin with another epoxy compound using as a catalyst the reaction product of an organoaluminum compound, a phosphoric acid compound and 1,8-diaza-bicyclo(5,4,0)undecene-7 or its salt.

4,299,945

THERMOPLASTIC POLYAMIDE IMIDE COPOLYMERS AND METHOD OF PREPARATION

Toshihiko Aya; Takashi Sasagawa, and Sho Kadoi, all of Nagoya, Japan, assignors to Toray Industries, Inc., Tokyo, Japan

Filed Mar. 25, 1980, Ser. No. 133,854

Claims priority, application Japan, Mar. 28, 1979, 54-35503

Int. Cl.³ C08G *69/32*

U.S. Cl. 528—126 **16 Claims**

1. As a composition of matter, a copolymer consisting of:
Unit A having the formula

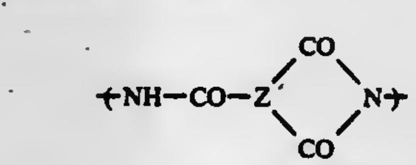

in an amount of about 50 mole %,
Unit B having the formula

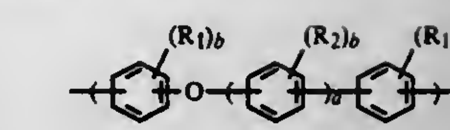

in an amount of from about 15–48 mole %, and
Unit C having the formula

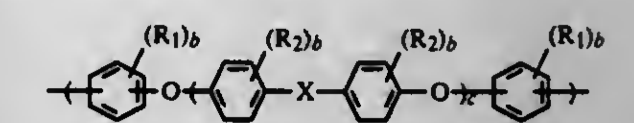

in an amount of from about 35–2 mole %,
wherein Z is a trivalent aromatic group having two of its three carbonyl groups attached to adjacent carbon atoms,
a is 0 or 1,
b is 0, 1, 2, 3 or 4,
R_1 is alkyl having 1–4 carbon atoms,
R_2 is a substituent selected from the group consisting of alkyl of 1–4 carbon atoms, halo and nitro,
c is an integer from 1 to 25, and
X is a member selected from the group consisting of $-SO_2-$,

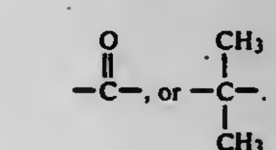

4,299,946

IMIDO COPOLYMERS FROM OLIGOIMIDE AND PHENOLIC COMPOUND

Maurice Balme, Sainte-Foy Les Lyon, and Jean-Louis Locatelli, Vienne, both of France, assignors to Rhone-Poulenc Industries, Paris, France

Filed Oct. 13, 1978, Ser. No. 951,000

Claims priority, application France, Oct. 14, 1977, 77 31672

Int. Cl.³ C08G *73/10*

U.S. Cl. 528—128 **12 Claims**

1. A thermosetting imido polymer produced by reacting a mixture consisting of:

(a) an oligoimide of the structural formula:

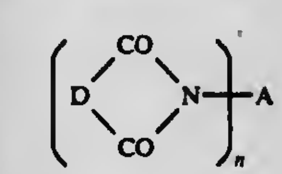

(I)

in which D represents a divalent radical which is one of the radicals of the structural formulae:

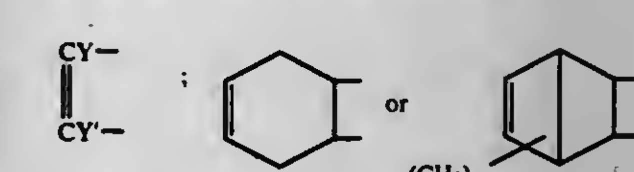

in which Y and Y', which are identical or different, represent H, CH_3, or Cl and m is equal to 0 or 1, the symbol A represents an organic radical of valency n, containing up to 50 carbon atoms, and n represents a number equal to at least 1.5 and at most 5; with

(b) an aromatic compound selected from the group consisting of mononuclear and polynuclear aromatic compounds bearing on at least one aromatic nucleus thereof one or more labile hydrogen atoms which are rendered labile by

the presence on said aromatic nucleus containing said labile hydrogen atoms of at least two electron-attracting substituents, of which one of said electron-attracting substituents comprises a hydroxyl group, and the other electron-attracting substituents are selected from the group consisting of: —OH—, —NO_2, —ONO_2, —CN, —NO, —COOH, —COOR', OR', in which R' is an alkyl radical having from 1 to 4 carbon atoms, —Cl, —Br, —I and —F.

4,299,947
PROCESS FOR PRODUCING QUICK-CURING PHENOLIC RESIN
Motoyuki Nanjo, Yokohama; Tsutomu Watanabe, Utsunomiya; Shigeru Koshibe, Toride, and Keiji Azuma, Matsudo, all of Japan, assignors to Sumitomo Bakelite Company Limited, Tokyo, Japan
Filed Jun. 11, 1980, Ser. No. 158,559
Int. Cl.³ C08G *8/10*
U.S. Cl. 528—139 6 Claims

1. A process for producing a quick-curing phenolic resin having an ortho linkage/para linkage ratio of 0.9-3.0 and a number average molecular weight of the resin exclusive of free phenol of 600-1,100, which comprises

reacting one mole of phenol with 0.6-0.95 mole of formaldehyde under reflux using at least one salt of an organic carboxylic acid with an alkaline earth metal or a transition metal selected from the first and second transition elements having atomic numbers of 21-30 and 39-48 in the Periodic table as a catalyst, then adding an acid to adjust the pH value to 1-5, immediately thereafter removing water under reduced pressure and further subjecting the product to reaction under normal pressure at a temperature of more than 100° C.

4,299,948
MACROCYCLIC POLYCARBONATES
Kurt Weirauch, Bergisch Gladbach; Alfred Horbach, Krefeld, and Hugo Vernaleken, Walsrode, all of Fed. Rep. of Germany, assignors to Bayer Aktiengesellschaft, Leverkusen, Fed. Rep. of Germany
Filed Nov. 26, 1979, Ser. No. 97,272
Claims priority, application Fed. Rep. of Germany, Sep. 14, 1979, 2937332
Int. Cl.³ C08G *63/62*
U.S. Cl. 528—171 5 Claims

1. Polycarbonates incorporating residues of diphenols of the formula (I)

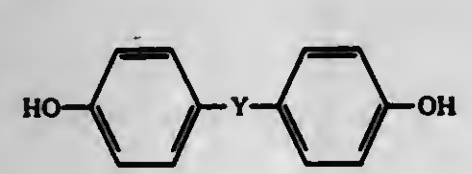

(I)

in which

Y denotes a single bond, an alkylene or alkylidene radical with 1-7 C atoms, a cycloalkylene or cycloalkylidene radical with 5-2 C atoms, —O—, —S—,

$$-\underset{\underset{O}{\|}}{S}-,\ -SO_2-,\ \text{or}\ -\underset{\underset{O}{\|}}{C}-,$$

which have weight average molecular weights M_{LS}, measured by light scattering, of at least 15,000, which are characterised in that the polycarbonates exhibit on average 0 to 1.5 mols end groups per mol polycarbonate.

4,299,949
FLUORINATED 3-KETOGLUTAROYL HALIDES AND POLYMERS THEREFROM
David C. England, Wilmington, and Edward G. Howard, Jr., Hockessin, both of Del., assignors to E. I. Du Pont de Nemours and Company, Wilmington, Del.
Filed Nov. 16, 1979, Ser. No. 95,071
Int. Cl.³ C08G *65/00*
U.S. Cl. 528—220 5 Claims

1. Copolymers containing units having the formula:

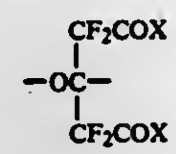

where X is selected from the class consisting of F and Cl, and units obtained by the addition polymerization of at least one compound of the class consisting of tetrafluoroethylene, chlorotrifluoroethylene, 1,1-dichlorodifluoroethylene, vinylidene fluoride, vinyl fluoride, trifluoroethylene, ethylene, hexafluoropropylene, perfluoromethylvinyl ether, bromotrifluoroethylene, methyl acrylate, methyl methacrylate, vinyl acetate and acrylonitrile.

4,299,950
UNSATURATED POLYESTER RESIN COMPOSITION
Riso Iwata, Tokyo; Atsuo Ishikawa, Kamakura, and Hisataka Komai, Tokyo, all of Japan, assignors to Nippon Zeon Co. Ltd., Tokyo, Japan
Filed Jul. 22, 1980, Ser. No. 171,171
Claims priority, application Japan, Jul. 24, 1979, 54-93892
Int. Cl.³ C08G *63/52*
U.S. Cl. 528—306 9 Claims

1. A cured product obtained from an unsaturated polyester resin composition comprising an unsaturated alkyd and a cross-linkable vinyl monomer, said unsaturated alkyd being a modified unsaturated alkyd obtained by reacting a polybasic acid with a saturated polyhydric alcohol in the presence of a cyclopentadiene-type oil having a viscosity at 25° C. of 50 to 50,000 centipoises the oil being present in an amount of 5 to 50% by weight.

4,299,951
TREATING SHAPED ARYLENE SULFIDE/SULFONE POLYMER WITH ORGANIC LIQUID AT ELEVATED TEMPERATURE
Robert W. Campbell, Bartlesville, Okla., assignor to Phillips Petroleum Co., Bartlesville, Okla.
Filed Jan. 29, 1980, Ser. No. 116,435
Int. Cl.³ C08G *75/14, 75/20*
U.S. Cl. 528—491 11 Claims

1. A process for increasing the tensile strength of a shaped arylene sulfide/sulfone polymer which comprises contacting the shaped article with an organic liquid comprising at least one of:

(a) saturated aliphatic and saturated cycloaliphatic hydrocarbons;
(b) saturated aliphatic and saturated cycloaliphatic alcohols; and
(c) saturated aliphatic and saturated cycloaliphatic esters of saturated aliphatic and saturated cycloaliphatic carboxylic acids at an elevated temperature which is below the melting point of the polymer for a period of time sufficient to increase the tensile strength of the shaped article.

4,299,952
METHOD FOR RECOVERING SYNTHETIC RESINOUS LATEX SOLIDS
Ronald J. Pingel, Midland; Geoffrey P. Onifer, Sanford, and Thomas L. Spencer, Coleman, all of Mich., assignors to The Dow Chemical Company, Midland, Mich.
Filed Mar. 24, 1980, Ser. No. 133,385
Int. Cl.³ C08F *6/00*
U.S. Cl. 528—500 10 Claims

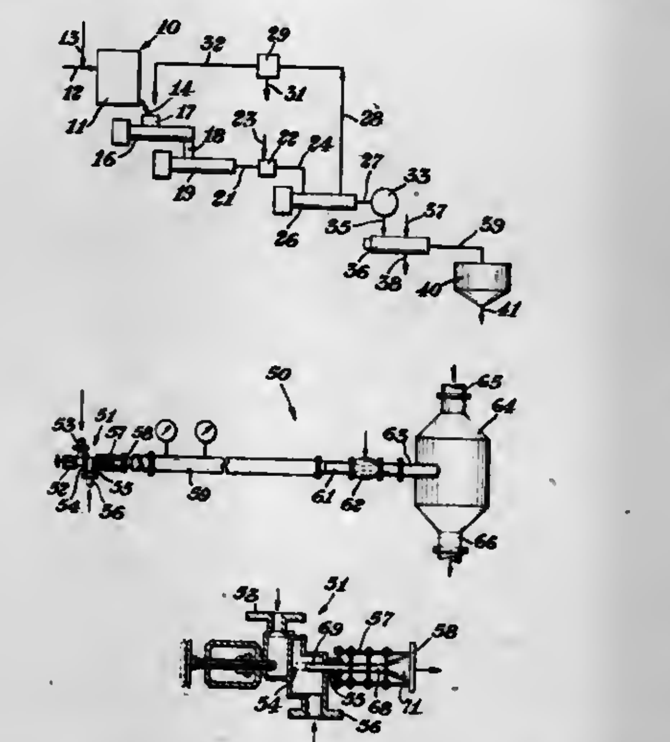

1. A process for the recovery of synthetic resinous thermoplastic latex solids from a latex, the steps of the method comprising providing a latex of a synthetic resinous thermoplastic polymer, the latex containing from about 10 to about 50 weight percent solids, subjecting the latex to mechanical shear sufficient to transform the latex into a paste-like mass, admixing the paste-like mass with steam under a pressure of from about 25 to 400 pounds per square inch with mechanical shear provided by the admixture of steam with said mass to thereby heat the paste-like mass above the softening point of the polymer and form a plurality of macro particles of which at least 90 weight percent are retained on an 80 mesh U.S. Sieve size screen and subsequently subjecting said macro particles to mechanical working to expel at least a majority of water associated therewith.

4,299,953
MYCAROSYLTYLACTONE
Robert L. Hamill, Greenwood, and Gene M. Wild, Indianapolis, both of Ind., assignors to Eli Lilly and Company, Indianapolis, Ind.
Filed Jul. 29, 1980, Ser. No. 173,312
Int. Cl.³ C07H *17/08;* C07D *313/00*
U.S. Cl. 536—17 R 14 Claims

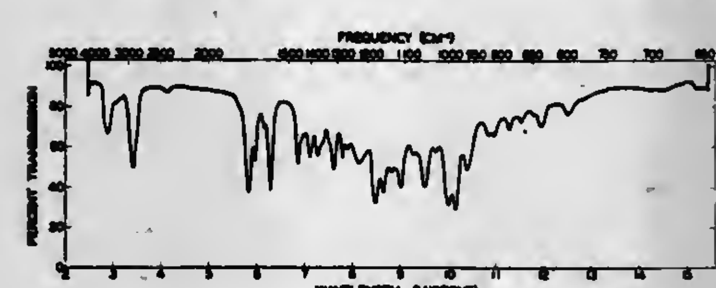

1. Mycarosyltylactone which has the structure:

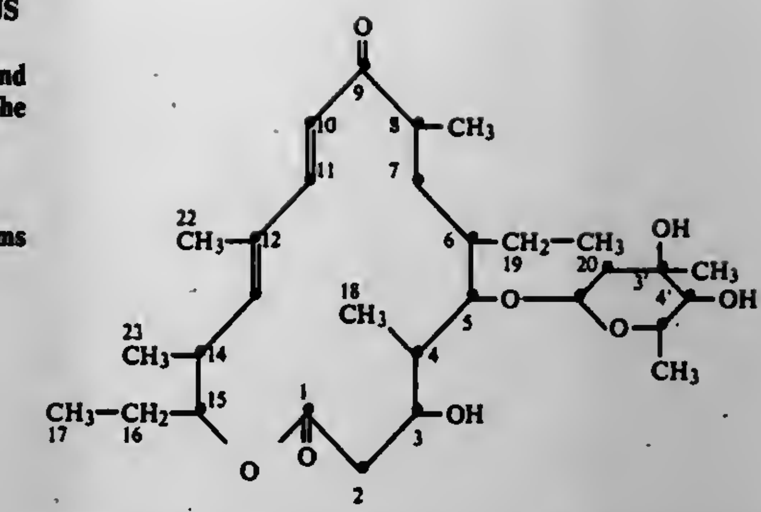

I

and the 3,4'-diacyl ester derivatives of mycarosyltylactone wherein each of said esters is an ester of a monocarboxylic acid or a hemi-ester of a dicarboxylic acid, each of 1 to 18 carbon atoms.

4,299,954
CEPHALOSPORIN VINYL HALIDES
Douglas O. Spry, Indianapolis, Ind., assignor to Eli Lilly and Company, Indianapolis, Ind.
Filed Nov. 5, 1979, Ser. No. 91,603
Int. Cl.³ C07D *501/20*
U.S. Cl. 544—30 23 Claims

1. A compound of the formula

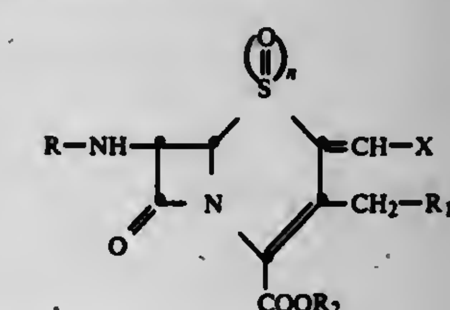

wherein R is an acyl group

$$R'-\overset{\overset{O}{\|}}{C}-$$

wherein R' is C_1-C_4 alkyl, cyanomethyl, halomethyl, phenyl; a group of the formula

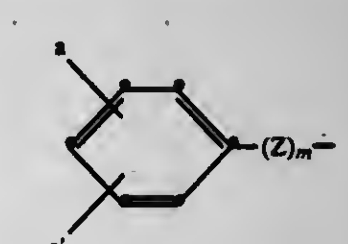

wherein a and a' are independently hydrogen, halogen, C_1-C_4 alkyl, C_1-C_4 alkoxy, or nitro, Z is O or S, and m is 0 or 1;

or R' is a group of the formula

$$R''-\underset{\underset{W}{|}}{CH}-$$

wherein R'' is cyclohexenyl, 1,4-cyclohexadienyl, or a phenyl or substituted phenyl group of the formula

wherein a and a' have the same meanings as defined above, or R'' is thienyl or furyl; W is amino, protected-amino, hydroxy, protected-hydroxy, carboxy or protected-carboxy;

R_1 is hydrogen or acetoxy;

X is chloro or bromo;

R_2 is hydrogen or a carboxylic acid protecting group; and n is 0 or 1.

4,299,955

PROCESS FOR PREPARING DERIVATIVES OF 7-AMINO-DESACETOXY CEPHALOSPORANIC ACID

Marco Falciani, and Renato Broggi, both of Milan, Italy, assignors to Dobfar S.p.A., Milan, Italy

Filed Mar. 24, 1980, Ser. No. 132,761

Claims priority, application Italy, Dec. 7, 1979, 27962 A/79

Int. Cl.³ C07D *501/20*

U.S. Cl. 544—30 **2 Claims**

1. A process for preparing derivatives of 7-amino-desacetoxy cephalosporanic acid having the formula

(I)

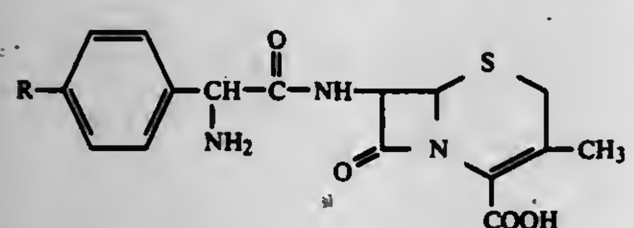

wherein R is —H or —OH, wherein a mixed anhydride having the formula

(II)

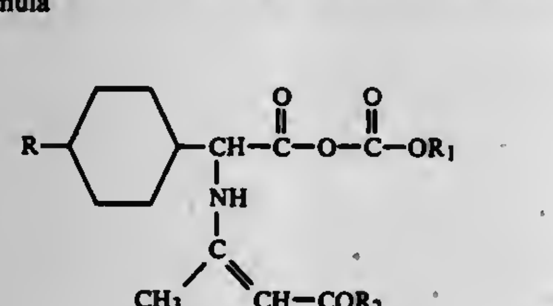

wherein R is —H or —OH, R_1 is methyl, ethyl or isobutyl, and R_2 is methoxyl or ethoxyl, is added at a temperature in the range of −60° C. to −10° C. to a solution obtained by dissolving 7-ADCA with excess triethylamine, in an amount in the range of 1.05–1.25 moles over 7-ADCA, in a solvent selected from the group consisting of dimethyl sulphoxide, dimethylacetamide, formamide, dimethylformamide and dioxane, in the presence of water and at a temperature ranging between 0° C. and +20° C., the mixed anhydride being in an amount at least equimolar with respect to the amount of 7-ADCA, then removing the enamine group by lowering the pH of the reaction mixture to 0.8–2.5 by adding an aqueous solution of an inorganic acid, and finally isolating said derivative product.

4,299,956

METHOD OF MAKING N-(2-METHOXYETHYL)MORPHOLINE

Michael E. Brennan, Austin, Tex., assignor to Texaco Inc., White Plains, N.Y.

Filed Sep. 17, 1980, Ser. No. 188,164

Int. Cl.³ C07D *295/08*

U.S. Cl. 544—177 **3 Claims**

1. A process for making N-(2-methoxyethyl)morpholine which comprises condensing N-(2-hydroxyethyl)morpholine with an excess of methanol in presence of a phosphorus-containing catalyst selected from the group consisting of acidic metal phosphates, phosphoric acids and their anhydrides, or phosphorous acids and their anhydrides, alkyl or aryl phosphate esters, alkyl or arylphosphite esters, alkyl or aryl substituted phosphorous acids and phosphoric acids, alkali metal monosalts of phosphoric acid, thioanalogs of the foregoing, and mixtures thereof at a temperature of 250° to 350° C., and under a pressure ranging from about 1000 psig to about 2000 psig, the amount of said phosphorus-containing catalyst ranging from about 1 percent to about 10 percent based on the weight of reactants, and the mole ratio of methanol to N-(2-hydroxyethyl)morpholine ranging from 1.5:1 to 10:1.

4,299,957

METHOD OF MAKING N-(2-METHOXYETHYL)MORPHOLINE

Michael E. Brennan, Austin, Tex., assignor to Texaco Inc., White Plains, N.Y.

Filed Sep. 17, 1980, Ser. No. 188,165

Int. Cl.³ C07D *295/08*

U.S. Cl. 544—177 **1 Claim**

1. A process for making N-(2-methoxyethyl)morpholine which comprises condensing N-(2-hydroxyethyl)morpholine with an excess of methanol in presence of a silica-alumina catalyst having an alumina content of 5–50 wt.% alumina at a temperature of 250° to 350° C., and under a pressure ranging from about 1000 psig to about 2000 psig, the amount of said catalyst ranging from about 1 percent to about 20 percent based on the weight of reactants, and the mole ratio of methanol to N-(2-hydroxyethyl)morpholine ranging from 1.5:1 to 10:1.

4,299,958

S-TRIAZINE-2,4,6-TRIONES

David Apotheker, Wilmington, Del., assignor to E. I. DuPont de Nemours and Company, Wilmington, Del.

Filed May 29, 1979, Ser. No. 42,946

Int. Cl.³ C07D *251/34*

U.S. Cl. 544—221 **3 Claims**

1. A compound selected from the group consisting of 1,3,5-tris-(3,3-difluoro-2-propenyl)-s-triazine-2,4,6-(1H,3H,5H)-trione and 1,3-bis-(3,3-difluoro-2-propenyl)-s-methyl-5-triazine-2,4,6-(1H,3H,5H)-trione.

4,299,959

FLUORESCENT PIGMENTS

Nalin B. Desai, Bombay, India, assignor to Ciba-Geigy Corporation, Ardsley, N.Y.

Division of Ser. No. 784,198, Apr. 4, 1977, Pat. No. 4,153,618. This application Jan. 31, 1979, Ser. No. 8,703

Claims priority, application Switzerland, Apr. 22, 1976, 5045/76

Int. Cl.³ C07D *311/66, 239/72, 487/00, 405/04*

U.S. Cl. 544—283 **5 Claims**

1. A fluorescent pigment consisting of N-substituted iminocoumarin of the general formula I,

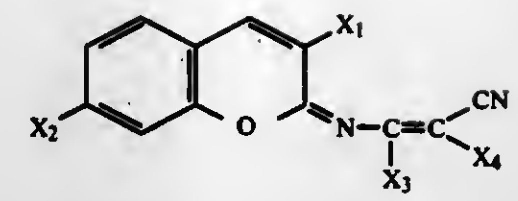

wherein

X_1 is a cyano group, a carboxamido group or a heteroaryl radical selected from the group consisting of pyridyl, thienyl, furyl, triazolyl, benzimidazolyl, benzoxazolyl, benzthiazolyl, quinoxalinyl and quinazolyl, which radical is unsubstituted or substituted by lower alkyl, lower alkoxy or halogen;

X_2 is (a) an amino group which is unsubstituted or mono- or di-substituted by lower alkyl or lower alkyl substituted by hydroxyl, nitrile, lower alkoxy, phenyl, phenylaminocarbonyloxy, phenoxy, halogen, lower alkoxycarbonyl, or acyloxy selected from benzoyloxy or acetyloxy, or by radicals

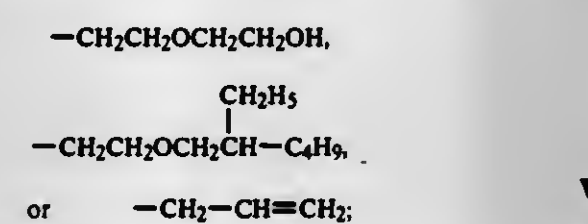

(b) a heterocycle bound to the coumarin nucleus via the nitrogen atom selected from the group consisting of piperidine, pyrrolidine, morpholine, piperazine and

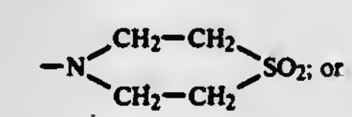

(c) A hydroxy group or an alkoxy group;

X_3 is hydrogen, halogen or cyano; and

X_4 is a carboxylic acid group which has been esterified by a lower alkanol, or a cyano group.

4,299,960

2-AMINO-4,6-DISUBSTITUTED PYRIMIDINES

Julius J. Fuchs, Wilmington, Del., assignor to E. I. Du Pont de Nemours and Company, Wilmington, Del.

Division of Ser. No. 67,354, Aug. 14, 1979, Pat. No. 4,235,802. This application Apr. 24, 1980, Ser. No. 143,374

Int. Cl.³ C07D *239/52*

U.S. Cl. 544—320 **3 Claims**

1. A process for preparing a compound of the formula:

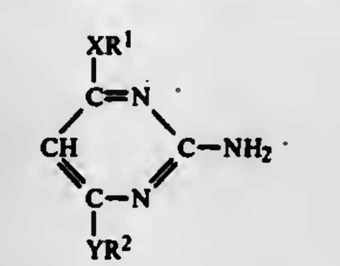

wherein

X and Y are independently O or S; and

R^1 and R^2 are independently C_1–C_4 alkyl, $(CH_2)_nOR^3$ where R^3 is C_1–C_4 alkyl and n is 1 or 2, CH_2CH_2Cl or CH_2CF_3, provided that when R^1 or R^2 is CH_2CH_2Cl or CH_2CF_3, then the respective X or Y is O,

comprising: heating a compound of the formula:

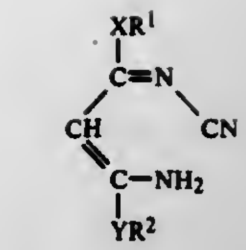

wherein X, Y, R^1 and R^2 are as defined above, at a temperature sufficient to ring close.

4,299,961

2,4,5 TRIFLUORO PYRIMIDINE AND PROCESS FOR PREPARING

Ralph J. De Pasquale, Gainesville, and Paul D. Schuman, Hawthorne, both of Fla., assignors to PCR, Incorporated, Gainesville, Fla.

Filed Jan. 7, 1980, Ser. No. 110,192

Int. Cl.³ C07D *239/24*

U.S. Cl. 544—334 **7 Claims**

1. 2,4,5-Trifluoropyrimidine.

4,299,962

PROCESS FOR SYNTHESIZING 2-SULPHANILAMIDO-3-METHOXYPYRAZINE

Vincenzo Globbio, Turin; Giorgio Ornato, and Livio Buracchi, both of Ivrea, all of Italy, assignors to Pierrel S.p.A., Milan, Italy

Filed Jan. 22, 1980, Ser. No. 114,430

Claims priority, application Italy, Jan. 22, 1979, 67132 A/79

Int. Cl.³ C07D *241/22*

U.S. Cl. 544—408 **9 Claims**

1. A process for preparing 2-sulphanilamido-3-chloropyrazine, comprising reacting 2,3-dichloropyrazine with sulphanilamide in the presence of potassium carbonate, an aprotic solvent and a second solvent which is inert toward the reagents present in the mixture and is adapted to remove the water of reaction.

4,299,963

1-AZAXANTHONE DERIVATIVES

Akira Nohara, Kyoto; Hirosada Sugihara, and Kiyoshi Ukawa, both of Osaka, all of Japan, assignors to Takeda Chemical Industries, Ltd., Osaka, Japan

Division of Ser. No. 970,105, Dec. 18, 1978, Pat. No. 4,255,567, which is a continuation of Ser. No. 881,237, Feb. 27, 1978, Pat. No. 4,143,042. This application Aug. 13, 1980, Ser. No. 177,580

Claims priority, application Japan, Mar. 8, 1977, 52-22654; Mar. 8, 1977, 52-25655; Dec. 30, 1977, 52-153898

Int. Cl.³ C07D *491/052*

U.S. Cl. 546—89 **38 Claims**

1. A compound of the formula:

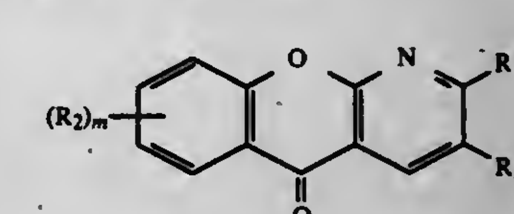

wherein

m is 1 or 2;

R'_1 is hydrogen, C_{1-6}alkyl, phenyl, C_{1-6}alkoxy-carbonyl, hydroxy, C_{1-4}alkoxy, amino or C_{1-3}alkylamino;

each R_2 is independently C_{1-6}alkyl, C_{1-4}alkoxy, halogen, nitro, hydroxy, carboxy, amino, C_{1-3}alkylamino or di(C_{1-3}alkyl)amino; or when m is 2, the two R_2 groups may be independently as defined above or may form together with adjacent ring carbon atoms the butadienylene group;

R_3 is C_{1-6}alkoxy-carbonyl, carboxamide, N-C_{1-3}alkyl carboxamide or N,N-di-(C_{1-3}alkyl)carboxamide.

4,299,964
3-PERHALOALKYLHYDROXY-OXAZOLIDINES AND THIAZOLIDINES HERBICIDAL ANTIDOTES
Eugene G. Teach, El Cerrito, Calif., assignor to Stauffer Chemical Company, Westport, Conn.
Division of Ser. No. 77,889, Sep. 21, 1979, Pat. No. 4,259,500. This application Sep. 26, 1980, Ser. No. 191,217
Int. Cl.[3] C07D *277/04*
U.S. Cl. 548—146 **2 Claims**

1. A compound of the formula

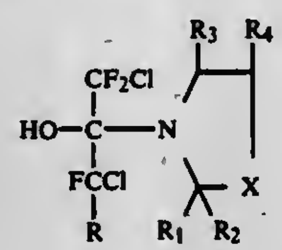

in which
R is selected from the group consisting of chloro and fluoro;
R_1–R_4 are each independently selected from the group consisting of hydrogen and 1–4 carbon alkyl; and
X is sulfur.

4,299,965
PREPARATION OF BENZOTRIAZOLE
Marie S. Chan, and Wood E. Hunter, both of Pittsburgh, Pa., assignors to Calgon Corporation, Pittsburgh, Pa.
Filed Jun. 30, 1980, Ser. No. 164,453
Int. Cl.[3] C07D *249/18*
U.S. Cl. 548—257 **4 Claims**

1. A process for the preparation of 1,2,3-benzotriazole which comprises continuously adding an aqueous solution of acetic acid and orthophenylenediamine to an aqueous solution of sodium nitrite over a period of from 1 to 3 hours at a temperature between 5° C. and 25° C. until the reaction is substantially complete and, thereafter, separating the 1,2,3-benzotriazole from the reaction mixture.

4,299,966
PROCESS FOR THE PREPARATION OF 4,4',7,7'-TETRACHLORTHIOINDIGO IN PIGMENT FORM
Hans-Samuel Bien, Burscheid; Werner Beinert, and Klaus Wunderlich, both of Leverkusen, all of Fed. Rep. of Germany, assignors to Bayer Aktiengesellschaft, Leverkusen, Fed. Rep. of Germany
Continuation of Ser. No. 37,395, May 8, 1979, abandoned, which is a continuation of Ser. No. 637,203, Dec. 3, 1975, abandoned. This application Jun. 27, 1980, Ser. No. 163,851
Claims priority, application Fed. Rep. of Germany, Dec. 6, 1974, 2457703
Int. Cl.[3] C09B *7/00*
U.S. Cl. 549—52 **4 Claims**

1. Process for the preparation of 4,4',7,7'-tetrachlorothioindigo in a form directly suitable for use as a pigment comprising oxidizing 3-hydroxy-4,7-dichloro-1-thionaphthalene with oxygen or an oxygen-containing gas in an alkaline aqueous or aqueous-organic medium in the presence of a catalyst selected from the group consisting of metal salts, metal oxides and metal hydroxide in which the metal is a transition metal at temperatures from 10° C. to the boiling point of said medium.

4,299,967
PROCESS FOR PRODUCING OPTICALLY ACTIVE 2-(2,2-DIHALOGENOVINYL)-CYCLOPROPANE-1-CARBOXYLIC ACIDS SUBSTITUTED IN THE 3-POSITION, AND DERIVATIVES THEREOF, AS WELL AS NOVEL 4-(2,2,2-TRIHALOGENOETHYL)-CYCLOBUTANE-1-SULFONIC ACID SALTS
John G. Dingwall, Sale, United Kingdom; Hans Greuter, Cos Cob, Conn.; Pierre Martin, Rheinfelden, Switzerland; Peter Ackermann, Reinach, Switzerland, and Laurenz Gsell, Basel, Switzerland, assignors to Ciba-Geigy Corporation, Ardsley, N.Y.
Filed Dec. 17, 1979, Ser. No. 103,983
Claims priority, application Switzerland, Dec. 15, 1978, 12784/78
Int. Cl.[3] C07C *51/487, 51/00, 67/60, 67/00*
U.S. Cl. 549—65 **10 Claims**

1. A process for the preparation of optically active cyclopropanecarboxylic acid derivatives of the formulae I or I'

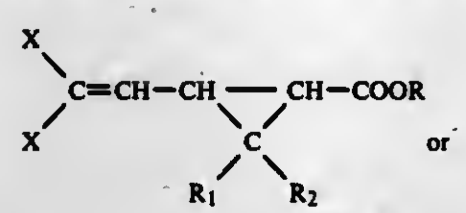

(I)

or

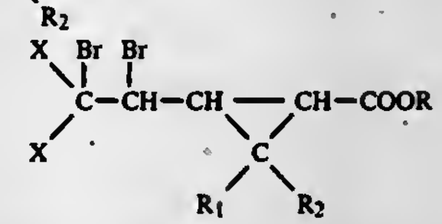

(I')

in which X is chlorine or bromine, one of the radicals R_1 and R_2 is methyl and the other is hydrogen or methyl, or R_1 and R_2 together are alkylene having 2–4 carbon atoms, and R is hydrogen, alkyl having 1–4 carbon atoms or a group (a)

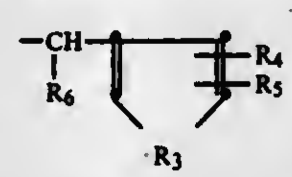

(a)

in which R_3 is oxygen, sulfur or vinylene, R_4 is hydrogen, methyl, benzyl, phenoxy, 4-methylphenoxy, 4-chlorophenoxy, 4-fluorophenoxy or phenylmercapto, R_5 is hydrogen, fluorine, chlorine or methyl and R_6 is hydrogen, cyano or ethynyl, which process comprises converting a racemate of a cyclobutanone of the formula II

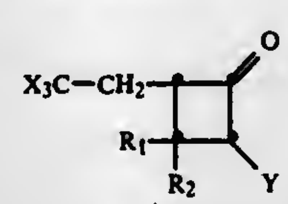

(II)

in which Y is chlorine, bromine or a group —OSO_2R', in which R' is alkyl, halogenoalkyl, benzyl, naphthyl or substituted or unsubstituted phenyl, by reaction with a sulfurous acid salt of an optionally active base selected from the group consisting of S(+)-2-amino-1-butanol, R(−)-2-amino-butanol, L(+)-threo-2-amino-1-phenyl-1,3-propanediol, (−)-brucine, (+)-quinidine, (−)-quinine, (−)-cinchonidine, (+)-cinchonine, (+)-dehydroabietylamine, (−)-digitonin, (+)-yohimbine, (−)-nicotine, (−)-ephedrine, (+)-ephedrine, (−)-N-methyl-ephedrine, R(+)-1-naphthyl-1-ethylamine, S(−)-naphthyl-1-ethylamine, S(−)-1-phenylethylamine, R(+)-1-phenylethylamine, (+)-pseudoephedrine, (−)-α-phenyl-β-p-tolylethylamine and (−)- and (+)-threo-1-(p-nitrophenyl)-2-,N,N-dimethylaminopropane-3-diol, the methyl ester of L-alanine, the ethyl ester of L-leucine, the tert.butyl ester of L-phenylalanine, the methyl ester of L-methionine and the benzyl ester of L-valine, to a mixture of diastereomeric sulfonic acid salts of the formula III

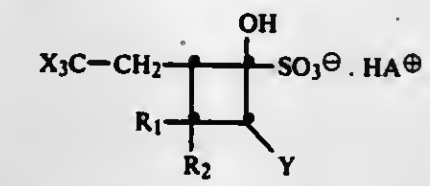

(III)

in which A is the optically active base, separating this mixture into the pure diastereomeric sulfonic acid salts of the formula III, decomposing said salts of the formula III to the optically active cyclobutanones of the formula II, converting said optically active cyclobutanones of the formula II in the presence of a base of the formula IV

$$M^{n+}(OR)_n^- \qquad \text{(IV)}$$

in which M is an alkali metal cation or alkaline earth metal cation and n is the number 1 or 2, to an optically active cyclopropanecarboxylic acid derivative of the formula I and, optionally, converting the latter by bromination to an optically active cyclopropanecarboxylic acid derivative of the formula I'.

4,299,968
NOVEL THIOPHENE COMPOUNDS
Pasquale N. Confalone, Bloomfield; Giacomo Pizzolato, Belleville, and Milan R. Uskokovic, Upper Montclair, all of N.J., assignors to Hoffmann-La Roche Inc., Nutley, N.J.
Continuation of Ser. No. 931,238, Aug. 7, 1978, abandoned, which is a continuation of Ser. No. 716,854, Aug. 23, 1976, abandoned, which is a continuation-in-part of Ser. No. 421,460, Dec. 3, 1973, Pat. No. 3,978,084. This application Dec. 20, 1979, Ser. No. 105,804
Int. Cl.[3] C07D *333/24;* A61K *31/38*
U.S. Cl. 549—68 **5 Claims**

1. A compound of the formula:

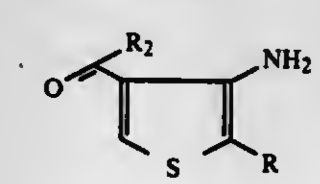

wherein R is aryl and R_2 is hydrogen, hydroxy, lower alkoxy or amino,
or pharmaceutically acceptable salts thereof.

4,299,969
METHOD FOR PREPARING LOWER ALKYL β-(S-BENZYLMERCAPTO)-β,β-PENTAMETHYLENE-PROPIONATES
William F. Huffman, Malvern, and Nelson C. Yim, Ambler, both of Pa., assignors to SmithKline Corporation, Philadelphia, Pa.
Filed Aug. 8, 1980, Ser. No. 176,372
Int. Cl.[3] C07C *149/40*
U.S. Cl. 560—9 **5 Claims**

1. In the process of preparing a lower alkyl β-(S-benzylmercapto)-β,β-pentamethylenepropionate by reacting benzyl mercaptide with a lower alkyl cyclohexylideneacetate in an inert organic solvent, the improvement comprising running the reaction in the presence of a catalytic quantity of an alkali metal benzylmercaptide.

4,299,970
OXY-ALKYLAMINO CARBOXYLIC ESTERS
Frederick Cassidy, and Gordon Wootton, both of Harlow, England, assignors to Beecham Group Limited, England
Division of Ser. No. 739,033, Nov. 5, 1976, which is a continuation of Ser. No. 632,975, Nov. 18, 1975, abandoned. This application Aug. 25, 1980, Ser. No. 181,432
Claims priority, application United Kingdom, Nov. 29, 1974, 51733/74
Int. Cl.[3] C07C *101/20*
U.S. Cl. 560—39 **8 Claims**

1. A compound of the formula:

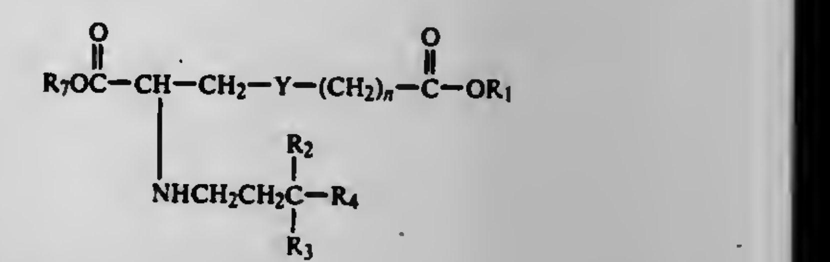

wherein
each of R_1 and R_7 is the residue of an alcohol of the formula R_1OH or R_7OH containing 1 to 12 carbon atoms;
R_2 is hydrogen or alkyl of 1 to 4 carbon atoms;
R_3 is hydroxy, acyloxy of 1 to 4 carbon atoms or benzyloxy;
R_4 is hydrogen or alkyl of 1 to 9 carbon atoms;
Y is ethylene or vinylene and
n has a value of from 1 to 8.

4,299,971
TRIAZOLOBENZAZEPINES
Rodney I. Fryer, North Caldwell; Eugene J. Trybulski, Parsippany, and Armin Walser, West Caldwell, all of N.J., assignors to Hoffmann-La Roche Inc., Nutley, N.J.
Division of Ser. No. 99,109, Nov. 30, 1979, Pat. No. 4,243,589. This application Jul. 30, 1980, Ser. No. 173,576
Int. Cl.[3] C07C *69/76*
U.S. Cl. 560—107 **1 Claim**

1. A compound of formula

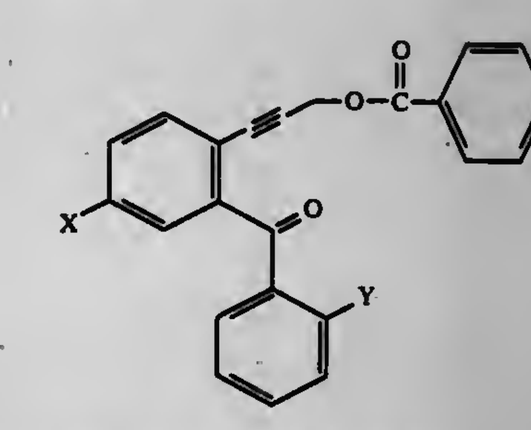

wherein X and Y are hydrogen or halogen.

4,299,972
PREPARATION OF CYCLOPROPANECARBOXYLIC ACID ESTERS
Gabor Kovacs, Budapest; Istvan Szekely, Dunakeszi; Marianne Lovasz nee Gaspar, Budapest; Rudolf Soos, Budapest, and Joszef Dukai, Budapest, all of Hungary, assignors to Chinoin Gyogyszer es Vegyeszeti Termekek Gyara Rt., Budapest, Hungary
Filed Jul. 1, 1980, Ser. No. 164,902
Claims priority, application Hungary, Jul. 2, 1979, CI 1945
Int. Cl.[3] C07C *67/18*
U.S. Cl. 560—124 **12 Claims**

1. A process for the preparation of an optically active or racemic cyclopropanecarboxylic acid derivative of the formula (I)

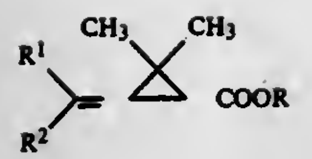

(I)

wherein

R^1 and R^2 are the same or different and each is lower alkyl or halogen;

R is selected from the group consisting essentially of the formula (II), (IV) or (VI)

(II)

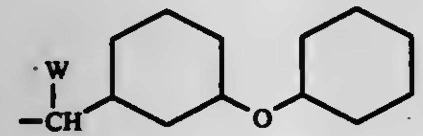

(IV)

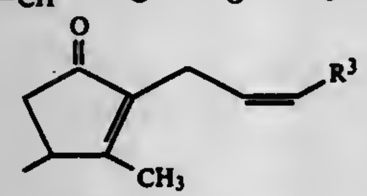

(VI)

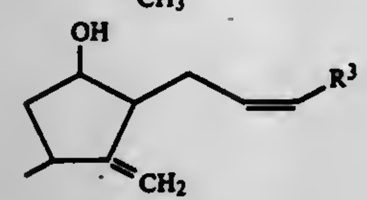

wherein

W is hydrogen, cyano or ethynyl; and

R^3 is a straight or branched chain lower alkyl or 1-alkenyl or hydrogen; or

R is a group of the formula (III) or (V)

(III)

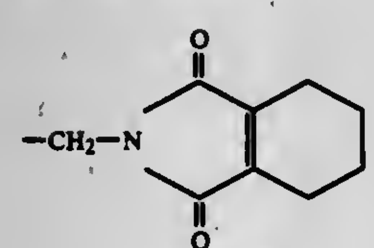

(V)

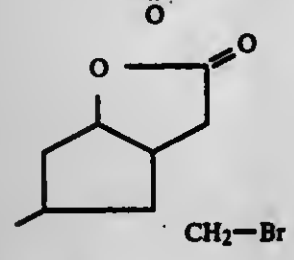

or a benzyl group,

the ~ valency bond represents α- and/or β-configuration;

the — valency bond represents β-configuration,

which comprises reacting an optically active or racemic cyclopropanecarboxylic acid of the formula (VII)

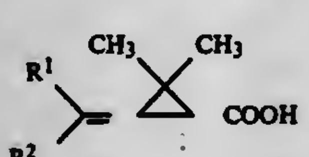

(VII)

with a dimethyl-methylidene-ammonium salt of the formula (VIII)

(VIII)

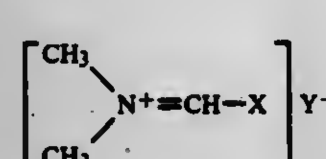

wherein

X is halogen or lower alkoxy and

Y^- is a halide or lower alkylsulfate ion in an anhydrous, inert organic solvent, and subsequently reacting a dimethyl-acyloxy-methylydene-ammonium salt thus obtained with an optically active, inactive or racemic alcohol of the formula

R—OH

without isolation, in the presence of an organic base.

4,299,973

ALKYL 3,3-DIMETHYL-2-(2-HYDROXY-2-METHYL-PROPYL)-1-CYCLOPROPENE-1-CARBOXYLATES

Michel Franck-Neumann, Strasbourg, and Michel Miesch, Mulhouse, both of France, assignors to Roussel Uclaf, Paris, France

Filed Aug. 28, 1980, Ser. No. 182,062

Claims priority, application France, Sep. 10, 1979, 79 22559

Int. Cl.[3] C07C *69/743*

U.S. Cl. 560—124 **2 Claims**

1. A cyclopropene-carboxylate of the formula

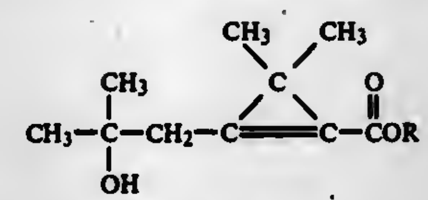

wherein R is alkyl of 1 to 6 carbon atoms.

4,299,974

PROCESS FOR PREPARING N-PROTECTED 2-AMINOETHANETHIOL

Thomas M. H. Liu; Ichiro Shinkai, both of Westfield, and Meyer Sletzinger, North Plainfield, all of N.J., assignors to Merck & Co., Inc., Rahway, N.J.

Filed Jun. 16, 1980, Ser. No. 159,982

Int. Cl.[3] C07C *102/00, 101/18*

U.S. Cl. 560—148 **3 Claims**

1. A process for preparing:

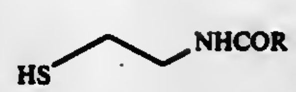

comprising the steps of treating 2-aminoethanethiol in the presence of base with a silylating agent followed by treating with acylating agent RCOX to yield:

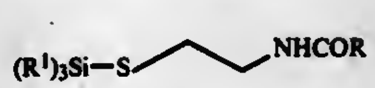

followed by hydrolysis; wherein X is chloro or bromo and

is a readily removable N-protecting group wherein R is selected from the group consisting of:

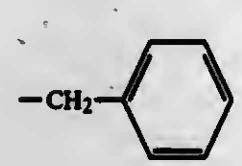

-continued

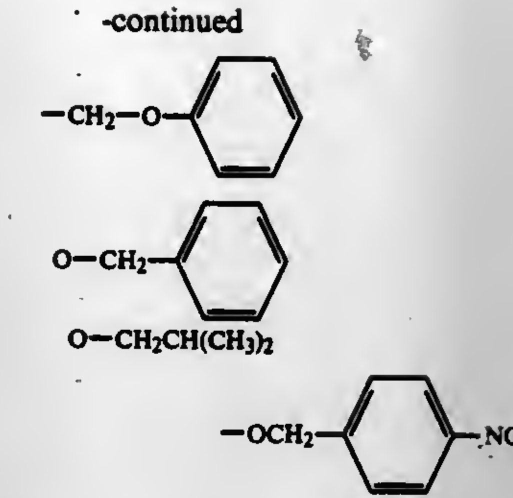

and R^1 is independently chosen from alkyl having from 1–6 carbon atoms, phenyl and phenylalkyl having from 7–12 carbon atoms.

4,299,975

SULFOSUCCINATE EMULSIFIERS

Adolf Asbeck; Michael Eckelt, both of Dusseldorf; Werner Erwied, Monheim; Rudi Heyden, Erkrath, and Manfred Petzold, Dusseldorf, all of Fed. Rep. of Germany, assignors to Henkel Kommanditgesellschaft auf Aktien, Dusseldorf-Holthausen, Fed. Rep. of Germany

Continuation-in-part of Ser. No. 865,881, Dec. 30, 1977, Pat. No. 4,250,050. This application Dec. 26, 1979, Ser. No. 106,853

Claims priority, application Fed. Rep. of Germany, Jan. 3, 1977, 2700072

Int. Cl.[3] C07C *149/20;* C08L *61/20*

U.S. Cl. 560—151 **8 Claims**

1. Sulfosuccinic acid derivatives having the formula:

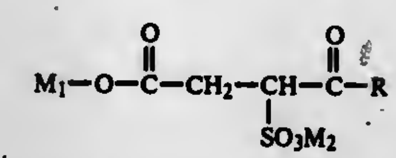

where R is a member selected from the group consisting of:

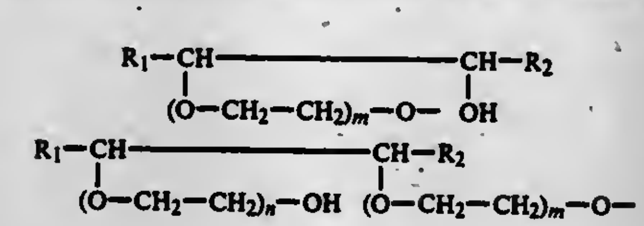

(1)

(2)

and

(3) mixtures thereof, where most of said mixture consists of the derivative where R is formula (1), R_1 is a member selected from the group consisting of hydrogen and alkyl having from 1 to 16 carbon atoms, R_2 is alkyl having from 1 to 16 carbon atoms, and the sum of the carbon atoms in R_1 and R_2 is from 9 to 16, M_1 and M_2 are cations selected from the group consisting of alkali metals, ammonium, alkylammonium having 1 to 4 carbon atoms in the alkyl and alkylolammonium having 2 to 4 carbon atoms in the alkylol, m is an integer from 1 to 10, and n is an integer from 1 to 10.

4,299,976

PREPARATION OF UNSATURATED DIESTER PRECURSOR FOR SEBACIC ACID

Chao-Yang Hsu, Media, and Haven S. Kesling, Jr., Drexel Hill, both of Pa., assignors to Atlantic Richfield Company, Los Angeles, Calif.

Filed Sep. 28, 1979, Ser. No. 80,354

Int. Cl.[3] C07C *67/465*

U.S. Cl. 560—190 **4 Claims**

1. A process for producing an unsaturated diester useful as a precursor for sebacic acid which consists essentially of contacting, in an inert reaction medium solvent selected from the group consisting of tetrahydrofuran, diethyl ether, dioxane, acetone, acetonitrile, methyl acetate, ethyl acetate, chloroform, benzene, toluene and dimethyl sulfoxide, methyl penta-2,4-dienoate at a temperature of 30° to 150° C. under an inert atmosphere with a catalytic amount of a homogeneous palladium (II) complex of the formula

wherein Q is phosphorous or arsenic; R is alkyl, trichloroalkyl, tribromoalkyl or trifluoroalkyl having from 1 to 6 carbon atoms or aryl having 6 to 12 carbon atoms and R' is alkyl, aminoalkyl or alkoxy having 1 to 6 carbon atoms or aryl or aryloxy having 6 to 12 carbon atoms.

4,299,977

PREPARATION OF PHTHALIC ACID BY SOLVENTLESS OXIDATION OF LIQUID ORTHO-XYLENE

George E. Kuhlmann, Lisle, and Alan G. Bemis, Naperville, both of Ill., assignors to Standard Oil Company (Indiana), Chicago, Ill.

Filed Jan. 5, 1978, Ser. No. 867,050

Int. Cl.[3] C07C *51/16*

U.S. Cl. 562—416 **5 Claims**

1. For the process of catalytically oxidizing o-xylene with air at a temperature of at least 150° C. in the absence of a solvent in a stirred oxidation zone under pressure to maintain at least the o-xylene in the liquid phase wherein catalysis is provided by manganese and/or cobalt with or without a source of bromine and the mode of operation comprises either single step batchwise operation or batchwise operation modified by substituting continuous supply of at least a portion of the o-xylene simultaneously with the addition of air into the oxidation zone in place of charging to said zone all of the xylene prior to such addition of air; the improvement for such process of oxidizing o-xylene comprising, conducting said oxidation at a temperature in the range of from 150° C. up to 235° C., in the presence of free water in an amount of from at least 2 percent up to 7 weight percent of the reaction mixture, under a gauge pressure of from 17.6 up to at least 28 kg/cm² to maintain the reaction mixture components in the liquid phase and the xylene oxidation product as liquid o-phthalic acid and based on one gram mole of o-xylene the catalysis (a) provided by at least 0.3 up to 10 milligram atoms of cobalt and from 0.2 up to 0.45 milligram atom of zirconium when said cobalt concentration is less than 0.75 milligram atom and based on such concentrations of cobalt or cobalt and zirconium from 0.5 up to 2 milligram atoms of manganese per milligram atom of cobalt or total of cobalt and zirconium and at least 0.5 but less than 2.0 milligram atoms of bromine per milligram atoms of the total of manganese and cobalt or manganese, cobalt and zirconium, and (b) initially solubilized by an amount of equivalents of o-toluic acid or benzoic acid equal to the equivalents of said metals cobalt, manganese and zirconium.

4,299,978

PROCESS FOR SEPARATING IMINODIACETIC ACID FROM AQUEOUS GLYCINE SOLUTION

Kazuo Nakayasu; Osamu Furuya, and Yoshihiko Hosaki, all of Yokohama, Japan, assignors to Showa Denko Kabushiki Kaisha, Tokyo, Japan

Filed Aug. 21, 1980, Ser. No. 180,014

Int. Cl.³ C07C *101/20*

U.S. Cl. 562—554 **5 Claims**

1. A process for separating an iminodiacetic acid component from an aqueous glycine solution including the same comprising the steps of:

(a) adding sulfuric acid, in the presence of a sodium salt, to said aqueous glycine solution in such an amount that the pH of the aqueous glycine solution becomes 1.5 or less, whereby the iminodiacetic acid is crystallized from the solution, and;

(b) separating the crystallized iminodiacetic acid component from the mother liquor.

4,299,979

POLYMERIZABLE MONOETHYLENIC CARBOXYLIC ACIDS WHICH DECARBOXYLATE ON HEATING

Edward J. Murphy, Mt. Prospect, Ill., assignor to DeSoto, Inc., Des Plaines, Ill.

Filed Jun. 21, 1979, Ser. No. 50,645

Int. Cl.³ C07C *125/065, 103/66*

U.S. Cl. 562—561 **5 Claims**

1. An addition polymerizable monoethylenically unsaturated carboxylic acid monomer which decarboxylates on heating and has the structural formula:

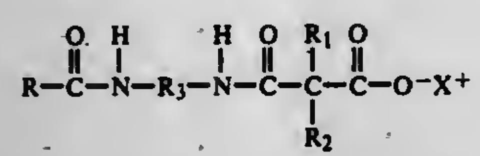

wherein R is a polymerizable monoethylenically unsaturated organic radical; R_1 and R_2 are selected from the group consisting of hydrogen and C_1–C_4 alkyl; R_3 is selected from the group consisting of C_1-C_4 divalent aliphatic groups; and X^+ is selected from the group consisting of the proton and protonated volatile amines.

4,299,980

CATALYTIC OXYDEHYDROGENATION PROCESS

Chelliah Daniel, and Phyllis L. Brusky, both of Columbus, Ohio, assignors to Ashland Oil, Inc., Ashland, Ky.

Filed Mar. 3, 1980, Ser. No. 126,581

Int. Cl.³ C07C *51/377, 57/05, 67/317, 69/54*

U.S. Cl. 562—599 **3 Claims**

1. In a process for the catalytic conversion of isobutyric acid or a lower alkyl ester thereof to the corresponding α,β-ethylenically unsaturated derivative via thee oxydehydrogenation reaction wherein an iron phosphate catalyst is contacted with a gaseous feed stream containing said acid or ester substrate and oxygen at a temperature between about 300° and 500° C., the improvement of effecting said oxydehydrogenation reaction in the presence of a modified iron phosphate catalyst having the gram-atom empirical formula $FeP_{1.2}Te_{0.01-1}O_x$ in which x represents the number of oxygen atoms bound to the other elements in their respective states of oxidation in the catalyst.

4,299,981

PREPARATION OF FORMIC ACID BY HYDROLYSIS OF METHYL FORMATE

Jackson D. Leonard, 7002 Blvd. East, Guttenberg, N.J. 07093

Filed Jun. 5, 1978, Ser. No. 912,189

Int. Cl.³ C07C *27/00, 51/09, 53/02*

U.S. Cl. 562—609 **4 Claims**

1. A process for the preparation of formic acid by the liquid phase hydrolysis of methyl formate which comprises: passing methyl formate and water to a reaction zone maintained at a pressure of from 5 to 18 atms. and a temperature of 90° to 140° C., the molar ratio of said methyl formate to water being from 1.5:1 to 10:1; providing sufficient reactor volume to allow the hydrolysis to reach at least 95% of equilibrium; discharging the resultant product into a low pressure zone maintained at a pressure of from about 2 atmospheres to 700 mm. Hg, wherein a substantial quantity of the unreacted methyl formate is vaporized overhead and the remaining liquid is thereby quickly cooled; feeding the liquid from said low pressure zone to a distillation zone maintained at a pressure of from 10 to 700 mm. Hg; and separating the residual unreacted methyl formate and methyl alcohol as a distillate from said distillation zone and a water-formic acid stream as a residue from said distillation zone.

4,299,982

QUATERNARIES OF HYDROXYALKYLAMINOALKYLAMIDES

Derek Redmore, Ballwin, and Benjamin T. Outlaw, Webster Groves, both of Mo., assignors to Petrolite Corporation, St. Louis, Mo.

Division of Ser. No. 814,572, Jul. 11, 1977, which is a division of Ser. No. 684,711, May 10, 1976, Pat. No. 4,060,553. This application Dec. 18, 1980, Ser. No. 217,940

Int. Cl.³ C07C *103/24*

U.S. Cl. 564—156 **5 Claims**

1. Quaternaries of hydroxyalkylaminoalkylamides of the general formula

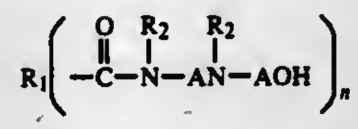

where R_1 is alkylene or arylene, R_2 is hydrogen, methyl or hydroxy ethyl and A is alkylene and n is an integer from 2 to 6.

4,299,983

CHEMICAL PROCESS

Trevor I. Martin, Burlington, and John M. Lennon, Mississauga, both of Canada, assignors to Xerox Corporation, Stamford, Conn.

Filed Oct. 3, 1979, Ser. No. 81,309

Int. Cl.³ C07C *85/02*

U.S. Cl. 564—394 **16 Claims**

1. The process for preparing a compound represented by the formula

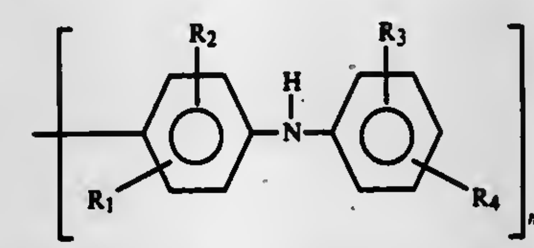

wherein n is an integer of 1 or 2, R_1, R_2, R_3 and R_4 are radicals independently selected from the group consisting of hydrogen, alkyl having from 1 to about 20 carbon atoms, phenyl, and alkaryl which comprises reacting an arylsulfonic acid alkali metal salt represented by the formula

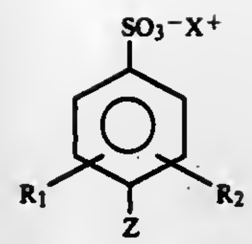

wherein X is an alkali metal, R_1 and R_2 are as defined above, and Z is hydrogen or a para substituted phenyl sulfonic acid alkali metal salt; with an alkali metal salt of an arylamine represented by the formula

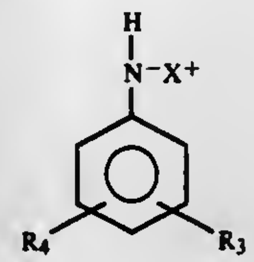

wherein X, R_3 and R_4 are as defined above, in the presence of an added inorganic alkali metal salt in a suitable reaction medium.

4,299,984

BENZO-BICYCLONONENE-DERIVATIVES

Colin L. Hewett, and David S. Savage, both of Glasgow, Scotland, assignors to Akzona Incorporated, Asheville, N.C.

Division of Ser. No. 735,286, Oct. 26, 1976, Pat. No. 4,107,206, which is a continuation-in-part of Ser. No. 563,435, Mar. 31, 1975, Pat. No. 4,008,277. This application Dec. 30, 1977, Ser. No. 866,116

Claims priority, application United Kingdom, Apr. 8, 1974, 15558/74

Int. Cl.³ C07C *87/28, 87/40*

U.S. Cl. 564—426 **7 Claims**

1. A compound of the formula

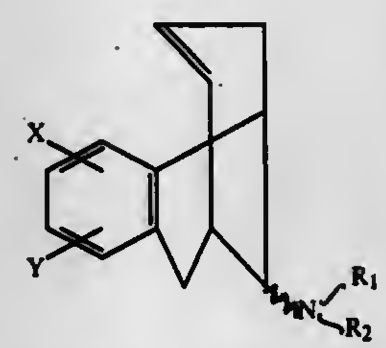

and pharmaceutical salts thereof, in which

(a) R_1 is selected from the group consisting of hydrogen and alkyl hydrocarbons of 1 to 6 carbon atoms;

(b) R_2 is aralkyl group selected from alkyl moieties of one to six carbons substituted with at least one aromatic group and

(c) X and Y are each selected from the group consisting of hydrogen, hydroxy, halogen, alkyl of 1 to 6 carbon atoms, alkoxy of 1 to 6 carbon atoms, nitro and trifluoromethyl.

4,299,985

SELECTIVE OXOAMINATION PROCESS

John F. Knifton, and Philip H. Moss, both of Austin, Tex., assignors to Texaco Inc., White Plains, N.Y.

Continuation-in-part of Ser. No. 778,817, Mar. 17, 1977, abandoned. This application Dec. 16, 1980, Ser. No. 217,287

Int. Cl.³ C07C *85/08, 45/50*

U.S. Cl. 564—467 **8 Claims**

1. A process for preparing linear alkyl primary amines by the catalytic oxoamination of linear alpha olefin substrates containing 2 to 30 carbon atoms, by the steps of first producing primarily linear aldehydes then preparing primarily the corresponding amines, by the steps of:

(a) forming a hydroformylation reaction mixture of olefin substrate, carbon monoxide, hydrogen and from about 0.001 to 0.1 moles of a three-component, ligand-stabilized, platinum (II) halide catalyst per mole of olefin substrate, said catalyst being selected from the group consisting of:

$PtCl_2[P(C_6H_5)_3]_2+SnCl_2$
$PtCl_2[P(p\text{-}CH_3.C_6H_4)_3]_2+SnCl_2$
$PtCl_2[P(n\text{-}C_4H_9)_3]_2+SnCl_2$
$PtCl_2[P(C_6H_5)_3]_2+SnCl_4$
$PtCl_2[P(C_6H_5)_3]_2+GeCl_2$
$PtCl_2[P(CH_3)_2C_6H_5]_2+SnCl_2$
$PtCl_2[Ph_2AsCH_2CH_2AsPH_2]+SnCl_2$
$PtCl_2[P(OC_6H_5)_3]_2+SnCl_2$
$PtCl_2[As(C_6H_5)_3]_2+SnCl_2$
$PtCl_2[S(C_6H_5)_2]_2+SnCl_2$
$PtBr_2[P(C_6H_5)_3]_2+SnBr_2$
$PtCl_2[PH_2PCH_2CH_2PPh_2]+SnCl_2$
$PtCl_2[Sb(C_6H_5)_3]_2+SnCl_2$
$PtCl_2(o\text{-}Phenanthroline)+SnCl_2$
$PtCl_2[P(C_6H_5)_3]_2+[Cl_3Sn][N(C_2H_5)_4]$
$PtCl_2[P(C_6H_5)_3]_2+[Cl_3Sn][P(C_6H_5)CH_2Cl]$
$PtCl_2[P(C_6H_5)_3]_2+[Cl_3Sn][N(n\text{-}C_4H_9)_4]$
$PtCl_2[P(C_6H_5)_3]_2+[Cl_3Sn][As(C_6H_5)_4]$
$PtCl_2[P(C_6H_5)_3]_2+[Cl_3Sn][N(C_7H_{15})_4]$
$PtCl_2[P(C_6H_5)_3]_2+[Cl_3Ge][N(C_2H_5)_4]$
$PtCl_2[P(p\text{—}CH_3.CH_3.C_6H_4)_3]_2+[Cl_3Sn][N(C_2H_5)_4]$
$PtCl_2[P(n\text{—}C_4H_9)_3]_2+[Cl_3Sn][N(C_2H_5)_4]$

the carbon monoxide and hydrogen being present in quantities sufficient to satisfy the stoichiometry of the hydroformylation reaction,

(b) pressurizing the hydroformylation reaction mixture between about 100 psig to about 3000 psig and heating the pressurized reaction mixture at about 25° C. to about 125° C. until a major amount of linear alkyl primary aldehyde products and a minor amount of non-linear alkyl aldehyde products are formed, and

(c) contacting said linear alkyl aldehyde products with at least sufficient hydrogen and ammonia to satisfy the stoichiometry of reducing the linear alkyl aldehyde to linear alkyl primary amine product, pressurizing between about 100 psig to about 3000 psig and heating said linear alkyl aldehyde from about 25° to about 200° C. in the presence of oxide-supported nickel catalysts containing from 5% up to 75 weight % nickel in addition to oxides of two or more other metals selected from the group consisting of magnesium, barium, aluminum and chromium, until a major quantity of linear alkyl primary amine product is formed, and

(d) isolating the linear alkyl primary amine product contained therein,

wherein the three-component, ligand-stabilized, platinum (II) halide catalyst and the oxide-supported nickel catalyst are added to the reaction mixture prior to the aldehyde forming reaction and are present during both the conversion of olefin substrates to alkyl aldehyde products and during the amination of said aldehydes to linear alkyl primary amines.

4,299,986

METHOD OF REDUCING ORGANIC COMPOUNDS WITH MIXED HYDRIDE ALKOXY DERIVATIVES OF ALUMINUM AND ALKALINE EARTH METALS

Salvatore Cucinella, San Donato Milanese, Italy, assignor to Anic, S.p.A., Palermo, Italy

Division of Ser. No. 960,781, Nov. 15, 1978, Pat. No. 4,219,491. This application Dec. 18, 1979, Ser. No. 104,809

Int. Cl.³ C07F *9/50*

U.S. Cl. 568—8 **5 Claims**

1. A method of reducing an organic compound selected from the group consisting of ketones, aldehydes, acids, esters, anhydrides, acidic chlorides, amides, sulfoxides, and phosphine oxides comprising contacting said organic compound with at least a stoichiometric amount of a mixed alkoxy-hydride compound of the formula $M[AlH_{4-n}(OR)_n]_2$ which may be complexed with a Lewis base, wherein M is an alkaline earth metal, R is selected from an aliphatic, cycloaliphatic or aromatic group having 1 to 20 carbon atoms an n is a number between 0.5 and 3.5 in the presence of an inert organic solvent.

4,299,987

PROCESS FOR PRODUCING BENZO-PHENONE FROM 1,1-DIPHENYLETHANE (OR 1,1-DIPHENYLETHYLENE) USING ANTIMONATE CATALYSTS

Serge R. Dolhyj, Parma, and Louis J. Velenyi, Lyndhurst, both of Ohio, assignors to The Standard Oil Company, Cleveland, Ohio

Filed Nov. 14, 1977, Ser. No. 851,011

Int. Cl.³ C07C *45/36*

U.S. Cl. 568—321 **1 Claim**

1. A process for forming diaromatic ketones comprising oxidizing at a temperature of about 200° C.–600° C. a compound of the formula:

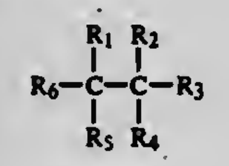

wherein

R_1, R_2, R_3 and R_4 are each independently selected from hydrogen and methyl; and

wherein R_5 and R_6 are each independently selected from;

(1) unsubstituted phenyl;

(2) substituted phenyl substituted with 1 to 5 substituents selected from the group consisting of:

(a) $C_{1\text{-}8}$ alkyl;

(b)

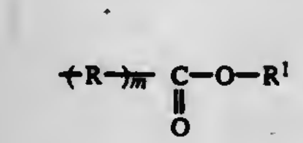

wherein R is $C_{1\text{-}6}$ alkyl, R^1 is $C_{1\text{-}6}$ alkyl and m is 0 or 1; and

(c) cyano;

(3) substituted phenyl substituted with one or two hydroxy groups; and

(4) substituted phenyl substituted with one or two acid anhydride groups of the formula

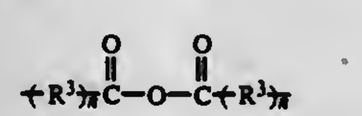

wherein R^3 is $C_{1\text{-}6}$ alkyl and n is 0 or 1, with the proviso that two acid anhydride groups on a phenyl group are arranged para with respect to one another;

over an oxide catalyst of the formula:

A_aSbO_x

wherein A is V, Cr, La, Ce, a rare earth element, Th, U, a Group VIII element, a Group VA element, a Group VIA element or mixture thereof;

and wherein a is about 0.02 to 10; and

x is the number of oxygens sufficient to satisfy the valence requirements of the other elements present.

4,299,988

1-HYDROXYMETHYL-1-OXO-PROSTANE DERIVATIVES OF THE E SERIES

Allan Wissner, Ardsley, N.Y., assignor to American Cyanamid Company, Stamford, Conn.

Continuation-in-part of Ser. No. 961,032, Nov. 15, 1978, abandoned, which is a continuation-in-part of Ser. No. 858,589, Dec. 8, 1977, Pat. No. 4,206,822, Ser. No. 858,588, Dec. 8, 1977, Pat. No. 4,170,597, Ser. No. 858,580, Dec. 8, 1977, Pat. No. 4,197,245, Ser. No. 858,487, Dec. 8, 1977, abandoned, Ser. No. 858,504, Dec. 8, 1977, Pat. No. 4,172,837, and Ser. No. 858,579, Dec. 8, 1977, Pat. No. 4,212,969. This appilcation Nov. 3, 1980, Ser. No. 203,753

Int. Cl.³ C07C *49/395*

U.S. Cl. 568—379 **4 Claims**

1. An optically active compound of the formula:

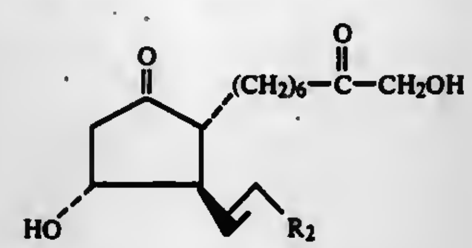

wherein R_2 is

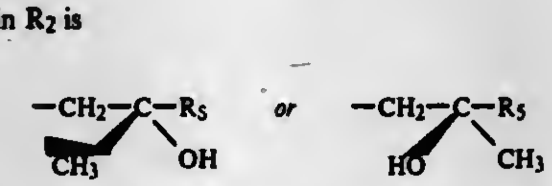

wherein R_5 is selected from the group consisting of C_4–C_7 alkyl and the racemic mixture thereof.

4,299,989

PREPARATION OF KETONES

Alan R. Dodds, Elgin, and Tamotsu Imai, Mt. Prospect, both of Ill., assignors to UOP Inc., Des Plaines, Ill.

Filed May 2, 1980, Ser. No. 145,952

Int. Cl.³ C07C *45/41*

U.S. Cl. 568—397 **5 Claims**

1. A process for the production of a ketone which comprises treating an alkyl carboxylic acid ester, wherein said carboxylic acid portion of said ester is selected from the group consisting essentially of formate, acetate, propionate, butyrate, valerate and caproate and wherein the alkyl portion of said ester is selected from the group consisting essentially of a methyl-, ethyl-, propyl-, n-butyl-, t-butyl-, n-pentyl-, sec-pentyl-, n-hexyl- and sec-hexyl- moiety in the presence of (1.) an atmosphere consisting essentially of carbon monoxide, (2.) a quaternary alkylammonium salt selected from the group consisting essentially of trimethylphenyl-, triethylphenyl-, tripropylphenyl-, tributylphenyl-, trimethylbenzyl-, triethylbenzyl-, tripropylbenzyl-, tetramethyl-, tetraethyl-, tetrapropyl-, tetrabutyl-, trimethylethyl-, trimethylpropyl-, trimethylbutyl-, triethylpropyl-, and triethylbutyl- ammonium chloride, dichlorobenzylalkyldimethylammonium chloride, dichlorobenzylalkyldimethylammonium bromide and dichlorobenzylalkyldimethylammonium iodide and (3.) a catalyst consisting essentially of a salt, carbonyl or organometallic complex of rhodium or cobalt selected from the group consisting essentially of rhodium or cobalt chloride, bromide, iodide, nitrate, or carbonyl, chlorodicarbonylrhodium dimer, chloro-bis (ethylene) rhodium dimer, hexarhodiumhexadecacarbonyl, tetrarhodium dodecarbonyl, rhodium acetate, rhodium acetylacetonate, chlororhodium or cobalt phthalocyanine, chlororhodium or cobalt phthalocyanine mono-, di- or tetrasulfonate, chlorocarbonyl- bis(triphenylphosphine)rhodium (I), nitrosyltris(triphenylphosphine)rhodium, hydridocarbonyltris(triphenylphosphine)rhodium (I), triphenylphosphinecobalttricarbonyl dimer, cyclopentadienenylcobaltdicarbonyl, bis(triphenylphosphine)iminium tetracarbonylcobaltate and cobaltiminium hexafluorophosphate at a temperature of from about 50° to about 300° C. and a pressure in the range of from about 1 to about 300 atmospheres, and recovering said resultant ketone.

4,299,990

PROCESS FOR PREPARING ALDEHYDES

Hans Tummes, Oberhausen; Boy Cornils, Dinslaken, and Heinz Noeske, Oberhausen, all of Fed. Rep. of Germany, assignors to Ruhrchemie AG, Oberhausen, Fed. Rep. of Germany

Filed Jun. 30, 1980, Ser. No. 164,386

Claims priority, application Fed. Rep. of Germany, Jul. 13, 1979, 2928314

Int. Cl.³ C07C *45/50*

U.S. Cl. 568—454 **6 Claims**

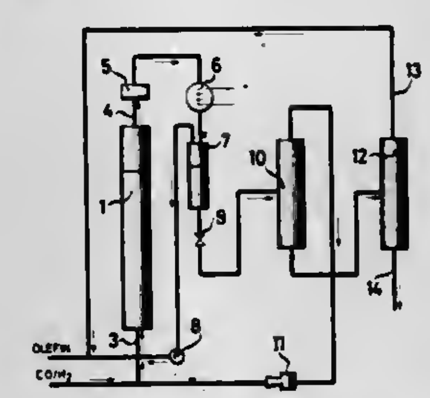

1. In a process for preparing an aldehyde by hydroformylation of an olefin in which a gaseous olefin together with gaseous carbon monoxide and gaseous hydrogen is introduced into a solution of a rhodium carbonyl-triphenylphospine complex as catalysts and a phosphine as solvent, an improvement wherein the gas stream entering the catalyst solution contains 5 to 30% by volume of at least 1 parraffin with 1 to 5 carbon atoms.

4,299,991

FORMATION OF HYDROPEROXIDES

Louis J. Velenyi, Lyndhurst; Curtis E. Uebele, Bedford, and Serge R. Dolhyj, Parma, all of Ohio, assignors to The Standard Oil Company, Cleveland, Ohio

Filed Dec. 28, 1979, Ser. No. 108,079

Int. Cl.³ C07C *179/035*

U.S. Cl. 568—573 **4 Claims**

1. A process for producing hydroperoxides comprising contacting at a temperature of about 60° C. to about 200° C. and a pressure of about 1 atmosphere to about 1000 psi a hydroperoxidizable hydrocarbon selected from the group consisting of tertiary alkanes, tertiary aryl-alkanes and tertiary cyclo-alkanes containing up to 30 carbon atoms per molecule with oxygen in the presence of a polymaleimide catalyst.

4,299,992

PROCESS FOR THE SELECTIVE HYDROXYMETHYLATION OF NITROTOLUENES

Antal Tungler; Tibor Mathe; Jozsef Petro, and Zoltan Bende, all of Budapest, Hungary, assignors to Reanal Finomvegyszergyar and Budapesti Muszaki Egyetem, both of Budapest, Hungary

Filed May 20, 1980, Ser. No. 151,597

Claims priority, application Hungary, May 29, 1979, RE 648

Int. Cl.³ C07C *29/38, 41/18*

U.S. Cl. 568—587 **4 Claims**

1. A process for the preparation of a nitrophenylalkanol of the general formula (II),

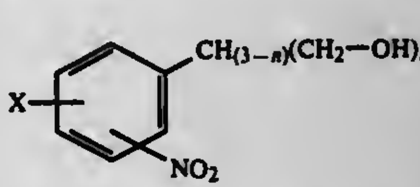

(II)

wherein the nitro group is in the ortho or para position, X stands for hydrogen, fluorine or an alkyl, alkoxy or nitro group, and n is 1, 2 or 3, by the selective hydroxymethylation of an ortho- or paranitrotoluene of the general formula (I),

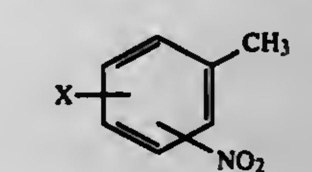

(I)

wherein X is as defined above, with an excess of formaldehyde at a temperature above room temperature in dimethyl formamide and in the presence of a strong base, characterized in that the reaction is performed in dimethyl formamide containing 0.1 to 1% by weight of water.

4,299,993

METHOD FOR INCREASING THE PRIMARY HYDROXYL END GROUPS IN POLYETHERS

Tristram W. Bethea, Akron, and Shingo Futamura, Wadsworth, both of Ohio, assignors to The Firestone Tire & Rubber Company, Akron, Ohio

Filed Mar. 3, 1980, Ser. No. 126,223

Int. Cl.³ C08G *65/20, 65/08*

U.S. Cl. 568—617 **15 Claims**

1. A method for increasing the primary hydroxyl end groups in polyethers comprising the steps of:

charging a reaction vessel with tetrahydrofuran and propylene oxide;

adding a catalyst selected from the group consisting of BF_3 and BF_3-ether complexes;

polymerizing said monomers to form a copolymer;

adding ethylene oxide to said copolymer and unreacted monomers;

polymerizing said ethylene oxide with said copolymer and unreacted monomes to form a terpolymer predominantly terminated by primary hydroxyl groups; and

thereafter terminating the reaction and separating said terpolymer from the remaining contents of said reaction vessel.

4,299,994

POLYOXYALKYLENE CONDENSATION PRODUCTS

Franklin H. Stabel, Mountain Lakes, N.J., assignor to Sandoz, Inc., East Hanover, N.J.

Filed Feb. 6, 1980, Ser. No. 119,048

Int. Cl.³ C07C *43/04*

U.S. Cl. 568—625 **10 Claims**

1. A mixture of compounds of formula I,

$$R\text{-}(OC_3H_6)_m\text{-}(OC_2H_4)_n\text{-}OH \qquad \text{I}$$

wherein

R is the residue of a mixture of primary, aliphatic alcohols, at least 70 mol% of which is branched 1-decanols, the remaining components consisting essentially of primary, aliphatic alcohols having an average of 8 to 12 carbon atoms,

m is 1 to 4, and

n is 3 to 20.

4,299,995

FLUORINATED POLYENES

Ka-Kong Chan, Hopatcong, and Beverly A. Pawson, Verona, both of N.J., assignors to Hoffmann-La Roche Inc., Nutley, N.J.

Division of Ser. No. 37,803, May 10, 1979, Pat. No. 4,231,944, which is a division of Ser. No. 936,466, Aug. 24, 1978, Pat. No. 4,171,318, which is a continuation-in-part of Ser. No. 809,738, Jun. 24, 1977, Pat. No. 4,137,246, which is a continuation-in-part of Ser. No. 722,939, Sep. 13, 1976, abandoned, which is a continuation of Ser. No. 632,028, Nov. 14, 1975, abandoned. This application May 13, 1980, Ser. No. 149,389

Int. Cl.[3] C07C *43/02, 33/46;* A61K *31/09, 31/05*

U.S. Cl. 568—649 **2 Claims**

1. A compound of the formula:

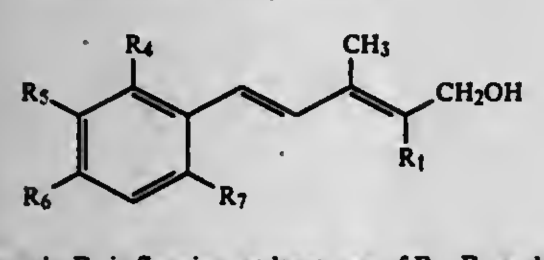

XXVIII

wherein R_1 is fluorine; at least one of R_4, R_5 and R_7 is halogen and the others are hydrogen or lower alkyl; R_6 is lower alkyl or lower alkoxy.

4,299,996

ALKYL ARYL ETHER PRODUCTION

Robert M. Parlman, Bartlesville, Okla., assignor to Phillips Petroleum Co., Bartlesville, Okla.

Filed Mar. 21, 1980, Ser. No. 132,600

Int. Cl.[3] C07C *41/06*

U.S. Cl. 568—658 **7 Claims**

1. An O-alkylation process for the production of alkyl aryl ethers which comprises reacting a phenol and an olefin in the presence of a perfluorosulfonic acid ion exchange resin catalyst under alkylation conditions which produce a product containing a high percentage of O-alkylated products rather than C-alkylated products.

4,299,997

PROCESS FOR PRODUCING ETHYLENE GLYCOL MONO-TERT-BUTYL ETHER

Tadashi Matsumoto; Osamu Kuratani; Yasunori Hirose, all of Soka, and Susumu Toba, Saitama, all of Japan, assignors to Maruzen Oil Co., Ltd., Osaka, Japan

Continuation-in-part of Ser. No. 70,761, Aug. 30, 1979, abandoned. This application Dec. 18, 1979, Ser. No. 105,000

Claims priority, application Japan, Aug. 30, 1978, 53/105814

Int. Cl.[3] C07C *41/06*

U.S. Cl. 568—678 **16 Claims**

1. In a process for producing ethylene glycol mono-tert-butyl ether by reacting ethylene glycol with isobutylene in the presence of a strongly acidic cation-exchange material, the improvement which comprises previously adding to the reaction system an additive comprising ethylene glycol di-tert-butyl ether and ethylene glycol mono-tert-butyl ether in a molar ratio of ethylene glycol di-tert-butyl ether to ethylene glycol mono-tert-butyl ether of about 1:0 to 1:5 in an amount such that said ethylene glycol di-tert-butyl ether is at least about 10 mol% based on the ethylene glycol or isobutylene, whichever is less, and conducting the reaction at reaction temperatures of about 60° to 130° C.

4,299,998

PREPARATION OF ETHERS

Paul R. Stapp, Bartlesville, Okla., assignor to Phillips Petroleum Co., Bartlesville, Okla.

Continuation-in-part of Ser. No. 921,013, Jun. 30, 1978, abandoned. This application Oct. 26, 1979, Ser. No. 88,702

Int. Cl.[3] C07C *41/06*

U.S. Cl. 568—697 **12 Claims**

1. A process for the preparation of saturated mono-ethers by reacting a mono-olefin and a monohydric alcohol which comprises contacting in the absence of water and oxygen

(a) a mono-olefinic compound with

(b) a monohydric alcohol, in the presence of

(c) a catalyst system comprising a palladium component, a copper component, and an alkali metal or alkaline earth metal halide component under reaction conditions of temperature and pressure sufficient to form a saturated mono-ether product.

4,299,999

PROCESS FOR THE PREPARATION AND ISOLATION OF METHYL-TERT-BUTYL ETHER

Paul Mikitenko, Noisy le Roi, and Lionel Asselineau, Paris, both of France, assignors to Institut Francais du petrole, Rueil-Malmaison, France

Filed May 9, 1980, Ser. No. 148,341

Claims priority, application France, May 9, 1979, 79 11958

Int. Cl.[3] C07C *41/05, 41/34*

U.S. Cl. 568—697 **8 Claims**

1. A process for producing and isolating methyl-tert-butyl ether (MTBE) comprising the following steps of:

(1)—feeding an etherification zone with a mixture containing (a) methanol, (b) a mixture of C_4 hydrocarbons containing isobutene and (c) a recycle stream containing methanol and at least one C_5 and/or C_6 saturated hydrocarbon and discharging from the reactor a reaction effluent containing the unconverted C_4 hydrocarbons, unconverted methanol, MTBE and the C_5 and/or C_6 hydrocarbon;

(2)—fractionating said reaction effluent into a first product or top product containing at least the major part of the unconverted C_4 hydrocarbons and a second product or botom product containing methanol, MTBE and the C_5 and/or C_6 hydrocarbon;

(3)—discharging the top product from step (2); and

(4)—fractionating the bottom product from step (2) into a top product containing a methanol/C_5 and/or C_6 hydrocarbon azeotrope and a bottom product containing the purified MTBE.

4,300,000

PROCESS FOR THE RECOVERY OF 2,2-BIS(4-HYDROXYPHENYL)PROPANE

Clayton W. Reinitz, Mt. Vernon, Ind., assignor to General Electric Company, Pittsfield, Mass.

Continuation of Ser. No. 865,297, Dec. 28, 1977, Pat. No. 4,192,955. This application May 29, 1979, Ser. No. 42,965

Int. Cl.[3] C07C *37/70, 37/84*

U.S. Cl. 568—724 **2 Claims**

1. A process to recover 2,2-bis(4-hydroxyphenyl) propane from an impure mixture comprising (i) said 2,2-bis(4-hydroxyphenyl) propane or (ii) an equimolar adduct of 2,2-bis(4-hydroxyphenyl) propane and phenol, the process comprising dissolving the impure mixture in a solvent in which (i) or (ii) is soluble and which is miscible with water, adding the resulting solution of (i) or (ii) in said solvent to water at a temperature at which (i) or (ii) is soluble therein, cooling the resulting mixture to a temperature where substantially all of the 2,2-bis(4-hydroxyphenyl) propane precipitates without co-precipitation of the phenol and physically recovering said precipitated 2,2-bis(4-hydroxyphenyl) propane.

2. A process to recover 2,2-bis(4-hydroxyphenyl) propane from crude or partially purified 2,2-bis(4-hydroxyphenyl) propane comprising dissolving said crude or partially purified 2,2-bis(4-hydroxyphenyl) propane in methanol at ambient temperature at a concentration of from about 5% by weight to saturation at such temperature, then adding the solution to water at a ratio of 1 part of said crude or partially purified 2,2-bis(4-hydroxyphenyl) propane per 1–10 parts by weight of water at a temperature at which said crude or partially purified 2,2bis(4-hydroxyphenyl) propane is soluble therein, cooling the resultant mixture to a temperature where substantially all of the 2,2-bis(4-hydroxyphenyl) propane precipitates without co-precipitation of phenol and allowing precipitation of pure 2,2-bis(4-hydroxyphenyl) propane in the form of rhombic crystals to occur.

4,300,001

DESENSITIZED TNT; ITS PREPARATION AND USE

Andreas J. J. Hendrickx, Venlo, Netherlands, assignor to Oce-Andeno B.V., Venlo, Netherlands

Filed Feb. 15, 1980, Ser. No. 121,838

Claims priority, application Netherlands, Feb. 21, 1979, 7901342

Int. Cl.[3] C06B *25/04, 49/00, 37/10;* C07C *79/10*

U.S. Cl. 568—767 **9 Claims**

1. A process for desensitizing the explosive 2,4,6-trinitrotoluene (TNT), which comprises dissolving TNT in oleum of from 10 to 40% (by weight) in strength.

5. A solution of 2,4,6-trinitrotoluene (TNT) in oleum of 10 to 40% (by weight) in strength, said solution containing dissolved TNT in an amount, depending upon the strength of the oleum, of at least 80 g and at most 600 g per liter of the oleum.

8. In a process for preparing phloroglucinol from 2,4,6-trinitrotoluene (TNT), which comprises converting TNT dissolved in concentrated sulfuric acid, by oxidation, into 2,4,6-trinitrobenzoic acid, reducing the trinitrobenzoic acid to 2,4,6-triaminobenzoic acid and hydrolysing and decarboxylating the latter, the improvement which comprises supplying as the TNT starting reactant for the process a solution of TNT desensitized in oleum according to claim 1, 2, 3, or 4.

4,300,002

PROCESS FOR PRODUCING POLYCYCLIC DIOLS

Haruo Shibatani; Yuji Ogomori; Takashi Kameda, all of Ami, and Yoshio Yanagi, Yokkaichi, all of Japan, assignors to Mitsubishi Petrochemical Co., Ltd., Tokyo, Japan

Filed Feb. 29, 1980, Ser. No. 125,877

Claims priority, application Japan, Mar. 5, 1979, 54/24545

Int. Cl.[3] C07C *35/22*

U.S. Cl. 568—817 **12 Claims**

1. A process for producing tricyclodecanedimethylol comprising reacting dicyclopentadiene with carbon monoxide and hydrogen in the presence of a catalyst comprising a cobalt carbonyl-phosphine complex in a suitable solvent, whereby a reaction mixture is formed, wherein the temperature, pressure, and concentration of reagents are chosen so that the F parameter defined by the following equation:

$$F = \frac{(\text{weight \% of Co in reaction mixture}) \times (\text{pressure in kg/cm}^2)^{0.5}}{(\text{moles of dicyclopentadiene present/gram atoms of Co present})^{1.5}} \times 10^4$$

is greater than 5.

4,300,003

PROCESS FOR THE PREPARATION OF LOW MOLECULAR POLYHYDROXYL COMPOUNDS

Edgar Möhring, Bergisch-Gladbach; Hanns P. Müller, and Kuno Wagner, both of Leverkusen, all of Fed. Rep. of Germany, assignors to Bayer Aktiengesellschaft, Leverkusen, Fed. Rep. of Germany

Filed Jul. 6, 1979, Ser. No. 55,655

Claims priority, application Fed. Rep. of Germany, Jul. 19, 1978, 2831656

Int. Cl.[3] C07C *31/18*

U.S. Cl. 568—863 **8 Claims**

1. A process for the preparation of low molecular weight polyhydric alcohols by the hydrogenation of formose solutions in the presence of metal catalysts, comprising:

(A) introducing a formose solution at a concentration of at least 20%, the pH of which solution has been adjusted to a value of from 7.5 to 12.5, batchwise into a first reactor at a rate such that the concentration of reducible groups (determined as carbonyl groups) inside the reactor does not exceed 2% by weight;

(B) hydrogenating said solution batchwise in the presence of a catalyst, said catalyst content remaining constant in said reactor;

(C) withdrawing the reaction product batchwise from the first reactor when the concentration of reducible groups (determined as carbonyl groups) has fallen below 1.5% by weight;

(D) adjusting the pH of the prehydrogenated product thus obtained to a value of from 1 to 6 and maintaining a temperature of 10° to 100° C. for from 10 minutes to 2 hours;

(E) introducing the reaction product thus obtained batchwise into a second reactor, the pH of said product being readjusted to a value of from 7.5 to 12.5, immediately before introduction of the product into the second reactor;

(F) hydrogenating the product batchwise in the presence of a catalyst, said catalyst content remaining constant in said reactor; and

(G) withdrawing the reaction product batchwise from the second reactor after a dwell time of from 5 minutes to 4 hours, further characterized in that the amount of said formose solution introduced into each reactor is from 3 to 30 times the amount of catalyst present in each reactor.

4,300,004

PROCESS FOR THE PREPARATION OF DICHLOROBENZENES

Adolf Wissner, Leverkusen; Werner Hauser, Odenthal-Gloebusch; Feliks Bitners, and Raimund Wambach, both of Leverkusen, all of Fed. Rep. of Germany, assignors to Bayer Aktiengesellschaft, Leverkusen, Fed. Rep. of Germany

Filed Dec. 10, 1979, Ser. No. 102,178

Claims priority, application Fed. Rep. of Germany, Dec. 23, 1978, 2855940

Int. Cl.[3] C07C *25/00*

U.S. Cl. 570—211 **5 Claims**

1. A process for separating ortho-, meta-, and/or para-dichlorobenzene from an isomeric mixture thereof which comprises:

A. in a first step distilling said isomeric mixture to distill over meta- and/or para-dichlorobenzene to leave behind ortho-dichlorobenzene which is separated off as bottoms product;

B. in a second step, cooling the distillate from step A to a temperature of 10° to 40° C. whereby para-dichlorobenzene as a solid phase is obtained and separating the said solid phase from liquid phase with which it is in admixture;

C. in a third step, further cooling said liquid phase from step B to a temperature of −40° to −5° C. whereby to precipitate a second solid phase and separating said second solid phase from the liquid phase with which it is in admixture;

D. in a fourth step, distilling the liquid phase from step C

whereby to obtain an isomeric mixture as bottoms and an isomeric mixture as distillate; and

E. removing m-dichlorobenzene from the distillate by step D by:

1. Cooling the distillate to a temperature of −25° to −40° C. whereby m-dichlorobenzene precipitates as a solid and removing solid m-dichlorobenzene from the liquid and recycling the remaining liquid to the distillation of step D; or

2. Further distilling the distillate of step D to remove m-dichlorobenzene as overhead and recycling the bottoms of such distillation to step D.

4,300,005

PREPARATION OF VINYL CHLORIDE

Tao P. Li, Chesterfield, Mo., assignor to Monsanto Co., St. Louis, Mo.

Filed Dec. 2, 1977, Ser. No. 856,889

Int. Cl.³ C07C *17/10*

U.S. Cl. 570—224 **10 Claims**

1. A process for producing monohalogenated olefins which comprises reacting an alkane having 2 to 4 carbon atoms with a hydrogen halide and a source of oxygen at a temperature in the range from about 400° C. to about 650° C. in contact with a catalyst consisting essentially of a copper halide and an alkali metal phosphate, and optionally from about 0.1% to about 1% by weight of a platinum group metal, deposited upon an inorganic support.

4,300,006

SYNTHETIC LUBE OIL PRODUCTION

William T. Nelson, Bartlesville, Okla., assignor to Phillips Petroleum Company, Bartlesville, Okla.

Filed Mar. 21, 1980, Ser. No. 132,561

Int. Cl.³ C07C *1/16, 2/74*

U.S. Cl. 585—10 **7 Claims**

1. A process for producing a hydrocarbon oil comprising

(a) contacting a mixed olefin feedstock comprising two olefin components namely

a first olefin component of one or more 1-olefins having the formula

$$R''CH{=}CH_2 \quad (1)$$

and at least about 50 weight % based on the total olefin content of a second olefin component of one or more internal olefins having the formula

$$RCH{=}CHR' \quad (2)$$

wherein R, R′ and R″ which can be the same or different are alkyl radicals of 6–8 carbon atoms,

with a boron trifluoride dimerization catalyst under dimerization conditions to form a mixture containing said hydrocarbon oil, and

(b) separating said hydrocarbon oil from said mixture.

7. Oil produced by the process of claims 1 or 5.

4,300,007

METHOD FOR PREPARING C_3-C_4 OLEFINS AND VINYLAROMATIC COMPOUNDS

Sergei A. Polyakov, 3 Sovetskaya ulitsa, 16, kv. 9, and Aron L. Shapiro, ulitsa Lensoveta, 50, kv. 29, both of Leningrad, U.S.S.R.

Filed Oct. 5, 1977, Ser. No. 839,552

Int. Cl.³ C07C *4/06*

U.S. Cl. 585—323 **3 Claims**

1. A method for preparing C_3-C_4-olefins and vinylaromatic compounds selected from the group consisting of styrene, vinyltoluenes and vinylxylenes comprising alkylation of aromatic hydrocarbons of the benzene series selected from the group consisting of toluene and methyl derivatives of toluene, by means of a C_2-C_3 olefin into the methyl group, followed by conversion of the resulting alkylaromatic compounds to the desired products in the presence of ethylene using a catalyst consisting of the following components, percent by weight:

chromium oxide: 3.0 to 16.1

tungsten oxide: 2.0 to 8.5

an oxide selected from the group consisting of an oxide of alkali metal and an oxide of an alkali-earth metal: 0.1 to 3.0

a carrier selected from the group consisting of silica and alumosilicate: the balance.

4,300,008

PREPARATION OF 2,6-DIMETHYLDECALIN AND ITS ISOMERS

David A. McCaulay, Homewood, Ill., assignor to Standard Oil Company (Indiana), Chicago, Ill.

Filed Sep. 25, 1980, Ser. No. 190,621

Int. Cl.³ C07C *2/76, 13/28, 175/00*

U.S. Cl. 585—360 **29 Claims**

1. A process for preparing 2,6-dimethyldecalin comprising contacting one or more 12 carbon atom-containing dicyclic naphthenic isomers of 2,6-dimethyldecalin with an isomerization catalyst system comprising a solution of tantalum pentafluoride or niobium pentafluoride or both in hydrogen fluoride at a temperature in the range of from about −60° C. to about 90° C. and in the presence of hydrogen, to thereby isomerize the dicyclic naphthenic isomer or isomers to 2,6-dimethyldecalin.

22. A process for preparing at least one 12 carbon atom-containing dicyclic naphthene comprising contacting a hydrocarbon solution comprising at least 40 to 100 weight percent of methylcyclopentane, cyclobexane or both with a dimerization catalyst system comprising a solution of tantalum pentafluoride or niobium pentafluoride or both in hydrogen fluoride at a temperature in the range of from about 10° C. to about 90° C. and in the presence of hydrogen at a partial pressure in the range of from about 0.7 to about 20 atmospheres, the hydrocarbon solution being substantially free of amounts of sulfur-containing compounds and aromatic and other unsaturated organic compounds sufficient to deactivate the catalyst system, the weight ratio of the pentafluoride to the hydrogen fluoride in the dimerization catalyst system being in the range of from about 0.1 to about 2, to thereby dimerize the methylcyclopentane or cyclohexane or both to form a hydrocarbon product mixture comprising at least 12 carbon atom-containing dicyclic naphthene.

4,300,009

CONVERSION OF BIOLOGICAL MATERIAL TO LIQUID FUELS

Werner O. Haag, Lawrenceville; Paul G. Rodewald, Rocky Hill, both of N.J., and Paul B. Weisz, Yardley, Pa., assignors to Mobil Oil Corporation, New York, N.Y.

Continuation of Ser. No. 974,205, Dec. 28, 1978, abandoned. This application May 15, 1980, Ser. No. 150,109

Int. Cl.³ C07C *11/20, 11/32, 1/00*

U.S. Cl. 585—408 **17 Claims**

1. A process for manufacturing liquid hydrocarbons, said process comprising: segregating from a plant or an animal an organic material or a mixture thereof characterized by an effective hydrogen to carbon ratio of about 1/1.0 to 2.2/1.0 and a molecular weight greater than 150, contacting said organic material or mixture at a temperature of 300° to about 650° C. at a pressure of 1 to 50 atmospheres, and at 0.2 to 20 WHSV, with a catalyst consisting essentially of a crystalline aluminosilicate zeolite having an effective pore diameter greater than about 5 Angstrom units, and recovering a liquid hydrocarbon mixture at least 40% of which distills below about 170° C.

4,300,010

PRODUCTION OF ETHYLBENZENE

John L. Cihonski, Odessa, Tex., assignor to El Paso Products Company, Odessa, Tex.

Filed Apr. 29, 1980, Ser. No. 144,887

Int. Cl.³ C07C *5/41, 85/11*

U.S. Cl. 585—434 **7 Claims**

1. A process for converting vinylcyclohexene to ethylbenzene with a conversion of at least about 90 percent and a selectivity of at least about 95 percent, which comprises contacting the vinylcyclohexene with molecular oxygen at a temperature in the range between about 190°-260° C. in the presence of a catalyst consisting essentially of palladium supported on a non-acidic zeolite carrier substrate; wherein the said catalyst has been pretreated by calcination in a molecular oxygen-containing atmosphere and then by calcination in a hydrogen or C_1-C_{10} nonaromatic hydrocarbon-containing atmosphere prior to vinylcyclohexene conversion.

4,300,011

SELECTIVE PRODUCTION OF AROMATICS

Louis D. Rollmann, Princeton, N.J., assignor to Mobil Oil Corporation, New York, N.Y.

Filed Apr. 28, 1980, Ser. No. 144,740

Int. Cl.³ C07C *2/68, 5/22*

U.S. Cl. 585—467 **36 Claims**

1. A process for conducting selective reactions of hydrocarbons and/or oxygenated hydrocarbons feeds which comprises conducting said selective reactions under conversion conditions in the presence of a catalyst comprising one or more zeolites having a silica to alumina mole ratio of at least 12 and a constraint index of 1 to 12 said catalyst being in contact with one or more bulky heterocyclic organic nitrogen compounds having an effective critical dimension of greater than 6.8 Angstroms and having a pKa of between about 3 and 9.

4,300,012

PROCESS FOR TRANSALKYLATION OF ALKYLAROMATIC HYDROCARBONS

Hosheng Tu, Shorewood, and Stephen W. Sohn, Northbrook, both of Ill., assignors to UOP Inc., Des Plaines, Ill.

Division of Ser. No. 112,762, Jan. 17, 1980, Pat. No. 4,264,473. This application Nov. 12, 1980, Ser. No. 206,323

Int. Cl.³ C07C *5/22, 5/52*

U.S. Cl. 585—470 **3 Claims**

1. A process for the transalkylation of alkylaromatic hydrocarbons at transalkylation conditions wherein said alkylaromatic hydrocarbons are contacted with a catalytic composite prepared by:

(a) subjecting a mordenite alumina admixture to an aqueous ammoniacal treatment at a pH of at least about 9:5:

(b) calcining the resulting mordenite alumina admixture from step (a);

(c) subjecting the resulting calcined mordenite alumina admixto an aqueous solution containing a boron salt; and

(d) calcining the resulting mordenite alumina admixture from step (c) to provide said catalytic composite.

4,300,013

ISOMERIZATION OF XYLENES

Thomas V. Whittam, Stockton-on-Tees, England, assignor to Imperial Chemical Industries Limited, London, England

Division of Ser. No. 845,391, Oct. 25, 1977, Pat. No. 4,209,498. This application Jun. 12, 1980, Ser. No. 158,807

Claims priority, application United Kingdom, Nov. 5, 1976, 46130/76; Jul. 6, 1977, 28267/77

Int. Cl.³ C10G *11/05;* C07C *5/27, 15/8*

U.S. Cl. 585—481 **5 Claims**

1. A process which comprises contacting an alkylbenzene or mixture of alkylbenzenes under isomerisation conditions in the vapour or liquid phase with a catalyst comprising FU-1.

4,300,014

PROCESS FOR ISOMERIZATION OF XYLENE

Yasuo Yamasaki; Tokuji Sakai; Tamio Onodera, and Kiji Sumitani, all of Matsuyama, Japan, assignors to Teijin Petrochemical Industries Ltd., Tokyo, Japan

Filed Nov. 4, 1980, Ser. No. 204,018

Claims priority, application Japan, Aug. 4, 1980, 55-106380

Int. Cl.³ C07C *5/24*

U.S. Cl. 585—481 **20 Claims**

1. A process for isomerizing xylenes, which comprises

contacting an aromatic hydrocarbon feedstock containing mainly a xylene isomeric mixture containing ethylbenzene with a catalyst of a palladium-containing crystalline aluminosilicate in the vapor phase in the presence of hydrogen to continuously isomerize xylenes and simultaneously de-ethylate the ethylbenzene selectively;

interrupting the isomerization reaction;

introducing an oxygen-containing gas into a bed of the catalyst in which coke has been deposited during the isomerization reaction, to contact the catalyst with the oxygen-containing gas;

burning off the coke deposits on the catalyst with the oxygen-containing gas by gradually increasing the temperature of introduction of the oxygen-containing gas from not more than 200° C. to a temperature in the range of 330° to 390° C. with no part of the catalyst bed exceeding a maximum temperature of 400° C. while controlling the hot spot temperature of the catalyst bed not to exceed 50° C. throughout the burn-off period;

reducing in hydrogen the catalyst from which the burnable coke deposits have been removed at least partly;

and

thereafter resuming the isomerization reaction in the presence of the regenerated catalyst.

4,300,015

CRYSTALLINE ALUMINO-SILICATE ZEOLITES CONTAINING POLYVALENT METAL CATIONS

Francis W. Kirsch, Wayne; David S. Barmby, Media, and John D. Potts, Springfield, all of Pa., assignors to Sun Oil Company of Pennsylvania, Philadelphia, Pa.

Division of Ser. No. 442,549, Feb. 14, 1974, abandoned, which is a division of Ser. No. 211,040, Dec. 22, 1971, Pat. No. 3,839,228, Ser. No. 114,061, Feb. 9, 1971, Pat. No. 3,803,256, Ser. No. 34,209, May 4, 1970, Pat. No. 3,706,814, Ser. No. 840,110, Jun. 16, 1969, abandoned, Ser. No. 830,687, Jun. 5, 1969, Pat. No. 3,655,813, Ser. No. 823,656, May 12, 1969, abandoned, Ser. No. 749,714, Aug. 2, 1968, abandoned, Ser. No. 716,190, Mar. 26, 1968, Pat. No. 3,865,884, Ser. No. 715,998, Mar. 26, 1968, Pat. No. 3,624,173, and Ser. No. 581,129, Aug. 25, 1966, abandoned. This application Mar. 4, 1975, Ser. No. 555,333

Int. Cl.³ C07C *2/58*

U.S. Cl. 585—722 **21 Claims**

1. An isoparaffin-olefin alkylation process wherein C_4-C_6 isoparaffin is contacted under alkylation conditions with C_2-C_9 olefin and the catalyst comprising a three dimensional crystalline zeolite molecular sieve having a pore size large enough to adsorb 2,2,3-trimethylpentane and having a composition expressed in terms of mole ratios of oxides as

$$a(I_2O):b(IIO):c(III_jO):d(IV_jO):Al_2O_3:eSio_2$$

wherein I represents a monovalent metal cation; II represents a divalent metal cation; III represents a trivalent metal cation; IV represents a tetravalent cation; a has a value of from zero to 0.15; b has a value of from zero to 0.75; c and d each have values of from zero to 1; e has a value of from 2 to 20; with the proviso that when e has a value of from 2 to 3, the value of (b+c)=0.75 to 1 and d=0; and with the proviso that when e has a value of >3 to 4, the value of (b+c+d)=0.6 to 1.0; and with the further proviso that when e has a value of >4 to 20, the value of (b+c+d)0.25 to 1.0, said zeolite containing less than about 60 percent of the water content when measured after it has been heated to about 570° F.

4,300,016
SCREENED BOX
William Bergeron, Igny, and Bernard Chauvet, Longjumeau, both of France, assignors to Compagnie Industrielle des Telecommunications Cit-Alcatel, Paris, France
Filed Mar. 7, 1980, Ser. No. 128,148
Claims priority, application France, Mar. 23, 1979, 79 07399
Int. Cl.^{3} H05K *5/04*
U.S. Cl. 174—35 R **6 Claims**

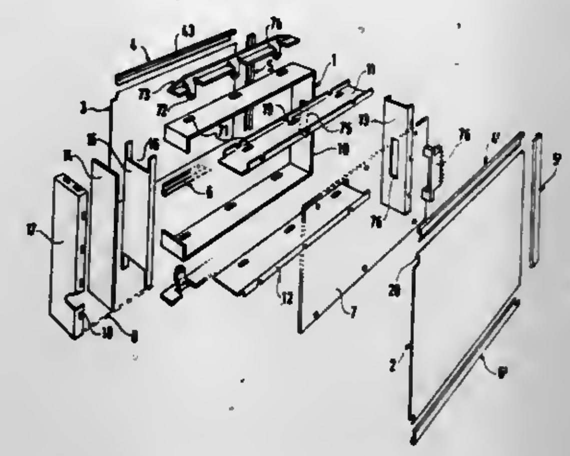

1. A screened box of parallelpipedal shape, comprising:
a rigid rectangular closed surround defining four side walls of the box, each side wall having folded edge portions with at least one of said side walls having its edge portions folded outwards and each of the remaining walls having adjacent its two edge portions respective recesses opening towards the inside of the surround;
two screening panels placed one on each side of the surround to define the top and bottom walls of the box, the edge portions of said panels overlapping said outwardly folded edge portions and engaging in said recesses; and
clamping bars gripping each of said outwardly folded edge portions and the overlapping edge portion of the corresponding screening panel.

4,300,017
SHIELDED RIBBON CABLE
Bernard A. Segretto, San Jose, and Roman J. Burkacki, Los Altos, both of Calif., assignors to Sperry Rand Corporation, New York, N.Y.
Filed Jun. 11, 1979, Ser. No. 47,387
Int. Cl.^{3} H01B *11/10*
U.S. Cl. 174—36 **6 Claims**

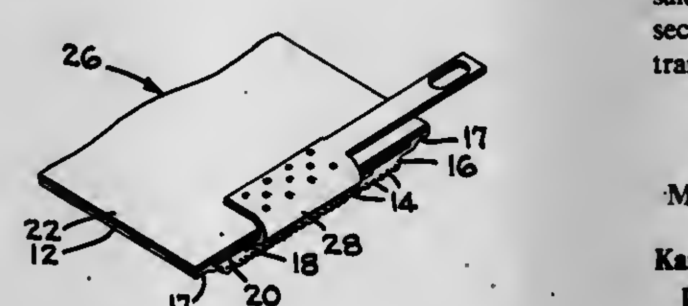

1. In a shielded ribbon cable of the type having at least one row of insulated conductors bonded together in a substantially flat array, a flexible foraminous conductive flat shield lying along the flat array and having a width corresponding to that of the array to shield the same from radio frequency interference and the like, and an insulative cover sheet overlying said shield and bonded to said array for retaining said shield in juxtaposition to said array, said cover sheet being laterally coextensive with said array, the improvement consisting essentially of a flat electrically insulative isolator strip intermediate said shield and said array and longitudinally coextensive therewith for preventing bonding of the central region of said cover sheet to said array through the foramina of said shield, said isolator strip being formed of material that is substantially nonadhesive and noncohesive to said insulation and having lateral edges less extensive than said array and said cover sheet to afford bonding between said array and cover sheet at the lateral margins thereof.

4,300,018
ELECTRONIC RELAY ARRANGEMENT
Gerrit Rademaker, Hilversum, Netherlands, assignor to U. S. Philips Corporation, New York, N.Y.
Filed Sep. 26, 1979, Ser. No. 79,020
Claims priority, application Netherlands, Oct. 13, 1978, 7810300
Int. Cl.^{3} H04M *1/26;* **H04L** *25/20*
U.S. Cl. 178—70 R **12 Claims**

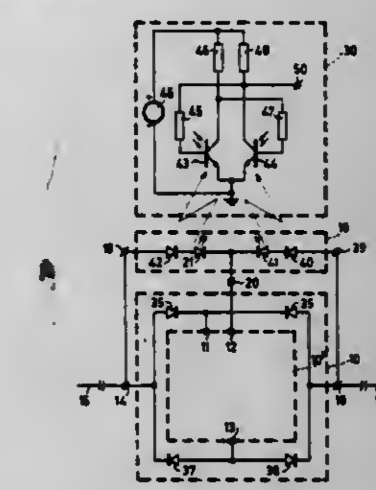

1. An electronic relay arrangement comprising a transmission circuit coupled between an input circuit and an output circuit for the electrical isolation of the input and output circuits from each other, said input circuit comprising a first and a second connecting terminal for the connection of a telegraph line, and said input circuit also comprising a current switching device having a first terminal connected to said first connecting terminal, a second terminal connected to a control input of said transmission circuit, and an output terminal coupled to said second connecting terminal, and said current switching device responding when a predetermined threshold line current value is exceeded so that said current switching device is in a first of exclusively two states when the line current value is below the threshold current value and in the second state of said current switching device, a control signal is applied to said second terminal for causing a current to flow through said transmission circuit with a predetermined constant value.

4,300,019
METHOD AND APPARATUS FOR MULTIPLYING AN ELECTRICAL SIGNAL
Kazuya Toyomaki, Yokohama, Japan, assignor to Victor Company of Japan, Limited, Yokohama, Japan
Filed Jan. 7, 1980, Ser. No. 110,349
Claims priority, application Japan, Jan. 9, 1979, 54-1677; Jan. 23, 1979, 54-6449
Int. Cl.^{3} H04H *5/00*
U.S. Cl. 179—1 GE **29 Claims**

1. A method of multiplying an input electrical signal by a multiplier electrical signal, comprising the steps of:
(a) producing an asymmetrical square wave signal having a frequency which equals twice the frequency of said multiplier signal, a first predetermined phase and a duty cycle of two thirds;
(b) producing a symmetrical square wave signal having the same frequency as that of said multiplier signal and a second predetermined phase; and

(c) multiplying said input electrical signal by said asymmetrical square wave signal and subsequently by said symmetri-

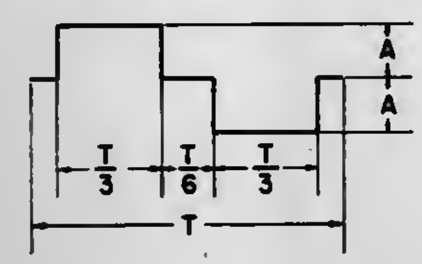

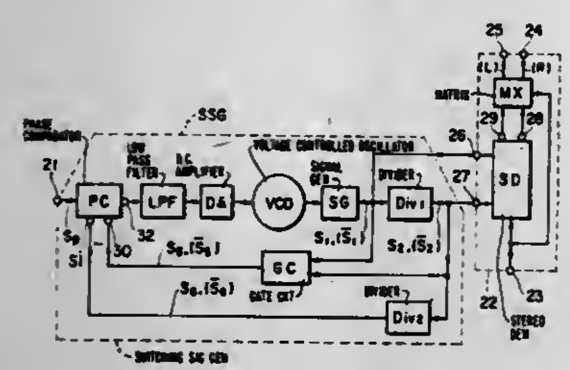

cal square wave signal or vice versa to obtain a product of said multiplications.

4,300,020

METHOD AND APPARATUS FOR ELIMINATING PILOT SIGNAL COMPONENTS FROM STEREO DEMODULATED SIGNALS

Kazuya Toyomaki, Yokohama, Japan, assignor to Victor Company of Japan, Limited, Yokohama, Japan

Filed Feb. 11, 1980, Ser. No. 120,096

Claims priority, application Japan, Feb. 15, 1979, 54-16557

Int. Cl.³ H04H *5/00*

U.S. Cl. 179—1 GD **9 Claims**

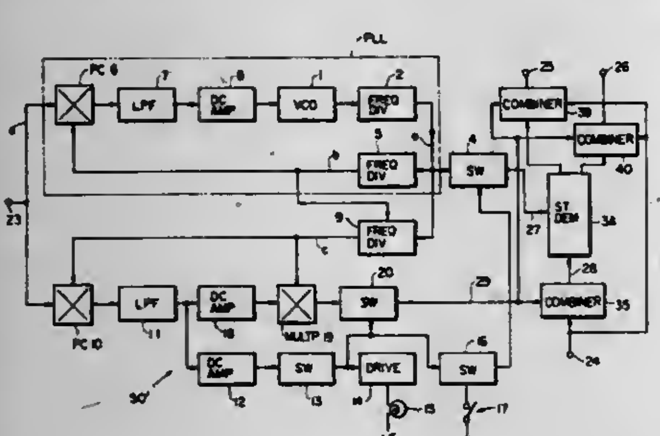

1. A method of eliminating pilot signal components from stereo demodulated left and right channel signals by means of a pilot signal cancelling signal, said stereo demodulated left and right channel signals being obtained by matrixing a difference signal indicative of the difference between said left and right channel signals and an inverted difference signal which corresponds to an inverted signal of said difference signal, with respect to a composite stereo signal which includes said pilot signal, a main signal indicative of the sum of said left and right channel signals, and a sub signal indicative of the difference between said left and right channel signals, said difference signal and said inverted difference signal are respectively obtained by multiplying said composite stereo signal by a stereo demodulating signal, comprising the steps of:

(a) combining said pilot signal cancelling signal with said composite stereo signal by a first predetermined ratio for producing a first combined composite stereo signal, said first combined composite stereo signal being used to produce said difference signal and said inverted difference signal; and

(b) combining said pilot signal cancelling signal with said composite stereo signal by a second predetermined ratio for producing a second combined composite stereo signal, said second combined composite stereo signal being used for matrixing said difference signal and said inverted difference signal for producing said left and right channel signals.

4,300,021

LINE CIRCUIT CONTROLLED BY A HALL EFFECT DEVICE

Hendrik Van Husen, Glen Ellyn, Ill., assignor to GTE Automatic Electric Labs Inc., Northlake, Ill.

Filed Dec. 20, 1979, Ser. No. 105,838

Int. Cl.³ H04M *3/22*

U.S. Cl. 179—18 FA **7 Claims**

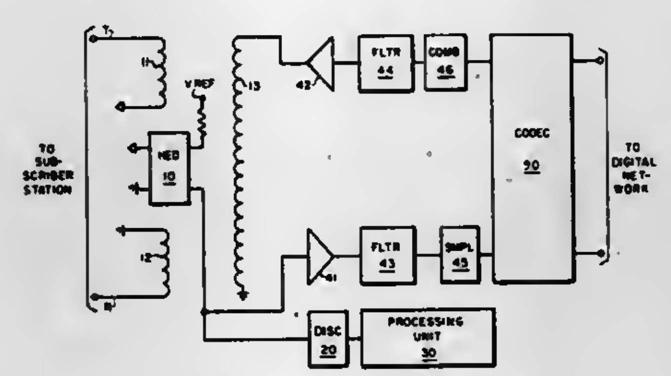

1. A line circuit for use in a digital telephone office including battery and ground sources and a subscriber station including a hookswitch, said line circuit comprising:

a transmission transformer having primary winding means connected to said battery and ground sources and to said subscriber station, operated in response to current flow through said primary winding means via operation of said hookswitch to generate a first magnetic flux;

magnetic flux detection means located in magnetic field proximity to said transmission transformer, operated in response to said first magnetic flux to generate a first analog signal representative of the intensity of said magnetic flux; and

first pulse code modulation processing circuitry connected to said magnetic flux detection means, operated in response to said first analog signal to generate a first pulse code modulation signal representative of said first analog signal.

4,300,022

MULTI-FILAR MOVING COIL LOUDSPEAKER

Richard Hastings-James, Halifax, and George W. Holbrook, Tantallon, both of Canada, assignors to Canadian Patents & Dev. Limited, Ottawa, Canada

Filed Jul. 9, 1979, Ser. No. 55,792

Int. Cl.³ H04R *3/00, 9/04*

U.S. Cl. 179—115.5 DV **9 Claims**

1. A moving coil loudspeaker comprising:

magnetic field structure means for providing unidirectional magnetic flux across an air gap;

acoustic diaphragm means; and

coil means positioned in the air gap and connected to the diaphragm means, said coil means having two or more insulated wires twisted around one another and wound onto a coil form, to form coils having approximately the same resistance and inductance and cutting substantially the same flux lines in the air gap.

8. A moving coil loudspeaker comprising:

magnetic field structure means for providing unidirectional magnetic flux across an air gap;

acoustic diaphragm means;

coil means positioned in the air gap and connected to the diaphragm means, said coil means having a plurality of insulated coils having approximately the same resistance and inductance and cutting substantially the same flux

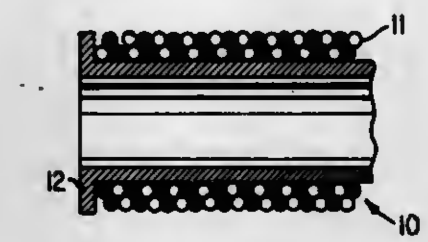

lines in the air gap, and the coils being connected into first and second groups each having one or more coils, the first group being connected to input terminals;

capacitance means connected to the input terminals in parallel to the first group of coils; and

a constant current feedback amplifier with an input coupled to the second group of coils and an output coupled to the input terminals in parallel to the first group of coils.

4,300,023

HYBRID CIRCUIT

Stephen H. Kelley, and William J. Lillis, both of Tempe, Ariz., assignors to Motorola, Inc., Schaumburg, Ill.

Filed Aug. 13, 1979, Ser. No. 66,213

Int. Cl.³ H04B *1/58*

U.S. Cl. 179—170 NC **9 Claims**

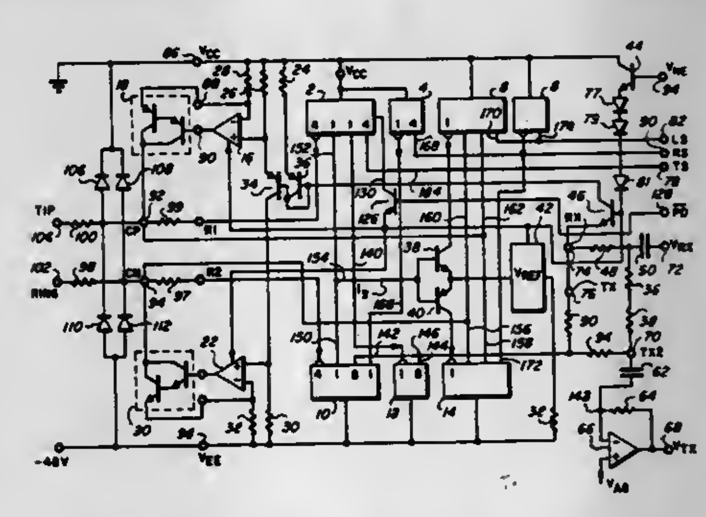

1. A direct coupled hybrid circuit for providing signal coupling between a balanced bidirectional transmission path and a pair of unbalanced unidirectional transmission paths, said hybrid circuit comprising:

first and second loop terminals coupled to said bidirectional transmission path;

first and second unidirectional terminals coupled to a different one of said pair of unidirectional transmission paths;

a plurality of current mirror circuits coupled between said loop terminals and said unidirectional terminals, said plurality of current mirror circuits including current mirror circuits for coupling signals at said loop terminals to said second unidirectional terminal and including current mirror circuits for coupling incoming signals on said first unidirectional terminal to said loop terminals;

first resistive means coupled between said first loop terminal and a first one of said plurality of current mirror circuits;

second resistive means coupled between said second loop terminal and a second one of said plurality of current mirror circuits; and

means for altering the equivalent resistance of said first and second resistive means across said first and second loop terminals from a first predetermined value to a second predetermined value in response to current flowing in only said first resistive means.

4,300,024

TECHNIQUE FOR MEASURING A DURATION OF SIGNALING PULSES IN A TELEPHONE CIRCUIT

Ruben Wever, San Jose, and Daniel C. Moyles, Saratoga, both of Calif., assignors to Wiltron Company, Mountain View, Calif.

Filed Feb. 11, 1980, Ser. No. 120,690

Int. Cl.³ H04M *3/22*

U.S. Cl. 179—175.2 A **10 Claims**

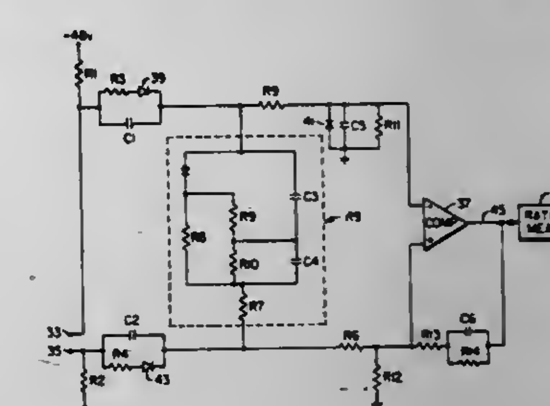

1. A method of measuring the duration of a current pulse in a telephone circuit without interrupting circuit continuity, wherein said telephone circuit causes a voltage waveform detected thereacross to be a distorted representation of said current pulse, said method comprising the steps of:

detecting a voltage pulse waveform at a desired location along said telephone circuit without interrupting the circuit,

obtaining a derivative of said voltage pulse waveform, whereby opposite polarity voltage spikes are generated at the beginning and end of the current pulse,

moving the voltage level existing between said opposite polarity voltage spikes to a non-zero level, thereby forming a modified derivative of the voltage pulse, and

detecting the duration between zero crossings of said modified derivative of the voltage pulse, thereby to determine the duration of said current pulse.

4,300,025

REFRIGERATOR DOOR SWITCH

Luis E. Prada, Louisville, Ky., assignor to General Electric Company, Louisville, Ky.

Filed Dec. 10, 1979, Ser. No. 101,946

Int. Cl.³ H01H *3/16*

U.S. Cl. 200—61.69 **3 Claims**

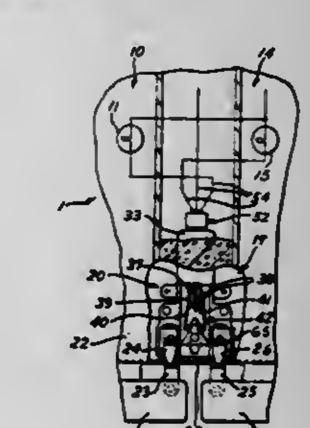

1. A unitary switch operable by the doors of a double door cabinet comprising:

a housing, including a central portion and a cross portion

member, arranged for mounting on the cabinet in a position associated with adjacent edge portions of the doors;
a switch contact within said central portion housing having a central common contact means and a first and second movable switch contact means arranged on either side of said central contact means for engagement therewith;
a cross member arranged in said cross portion member having at least two push buttons mounted on opposite end portions there-on with each of said buttons extending from said member through said housing for engagement by the edges of the doors;
biasing means located in said cross member being aligned with each of said buttons and positioned between said cross member and said cross portion for maintaining said buttons in their extended position relative to the housing;
a switch actuating projection on said cross member extending from said member interposed between said first and second movable switch contact means for engaging said first and second movable switch contact means respectively; and
pivot means between said housing and said cross member dimensioned to allow rotational movement of said cross member about said projection with said projection slidably arranged on said pivot means for causing said projection to move both of said first and second switch contact means when both of said buttons are engaged by said doors and for alternatively moving one or the other of said switch contact means in response to the opening of one or the other of said doors.

4,300,026
ELECTRICAL SWITCH
David W. Bull, Hersey, Mich., assignor to Nartron Corporation, Reed City, Mich.
Division of Ser. No. 861,436, Dec. 16, 1977, Pat. No. 4,204,102. This application May 14, 1979, Ser. No. 38,468
Int. Cl.³ H01H *3/12*
U.S. Cl. 200—153 J **14 Claims**

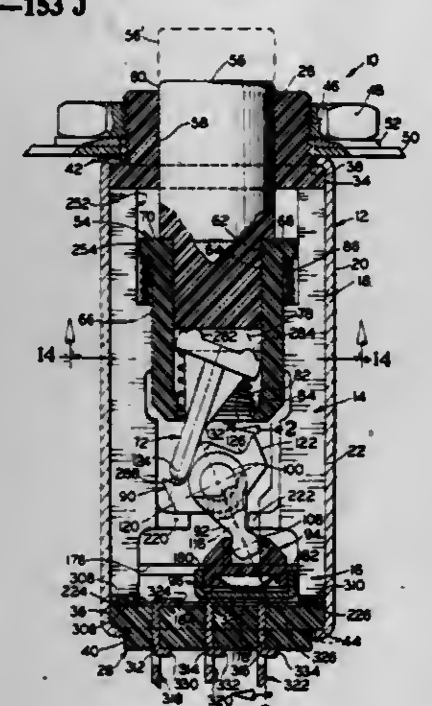

1. A toggle mechanism for use in an electrical switch assembly wherein first relatively movable electrical contact means is to be selectively moved with respect to a plurality of second relatively stationary electrical contact means, said toggle mechanism comprising a body member mounted for pivotal rotation about a pivotal axis, a first lever arm carried by said body member generally eccentrically thereof as to be disposed on a first general side of said axis, a second lever arm carried by said body member generally eccentrically thereof as to be disposed on a second general side of said axis opposite to said first general side, carrier means for carrying said first electrical contact means, a third motion transmitting arm carried by said body member and operatively connected through a lost-motion connection to said carrier means, said body member having at least first and second pivotal operating positions, said third arm being effective to position said carrier means and said first electrical contact means carried thereby in a corresponding first operating position relative to said second contact means when said body member is in said first pivotal operating position, said third arm being effective to position said carrier means and said first electrical contact means carried thereby in a corresponding second operating position relative to said second contact means when said body member is in said second pivotal operating position, a fourth arm carried by said body member, said fourth arm comprising generally opposed first and second surface portions inclined toward each other, and spring restraining means, said spring restraining means being generally juxtaposed to and operatively engaging said first surface portion of said fourth arm when said body member is in said first pivotal operating position and being generally juxtaposed to and operatively engaging said second surface portion of said fourth arm when said body member is in said second pivotal operating position, said spring restraining means being adapted to be resiliently deflected by said fourth arm as said body member is moved from said first pivotal operating position toward said second pivotal operating position, said first and second arms when respectively experiencing the application of a sufficient force thereto being effective to cause pivotal rotation of said body member from said first pivotal operating position to said second pivotal operating position and from said second pivotal operating position to said first pivotal operating position.

4,300,027
CIRCUIT BREAKER MOTOR OPERATOR VARIABLE DRIVE COUPLING APPARATUS
Eric H. Rask, Newington, and Roger N. Castonguay, Terryville, both of Conn., assignors to General Electric Company, New York, N.Y.
Filed Jun. 18, 1980, Ser. No. 160,777
Int. Cl.³ H10H *3/30*
U.S. Cl. 200—153 V **10 Claims**

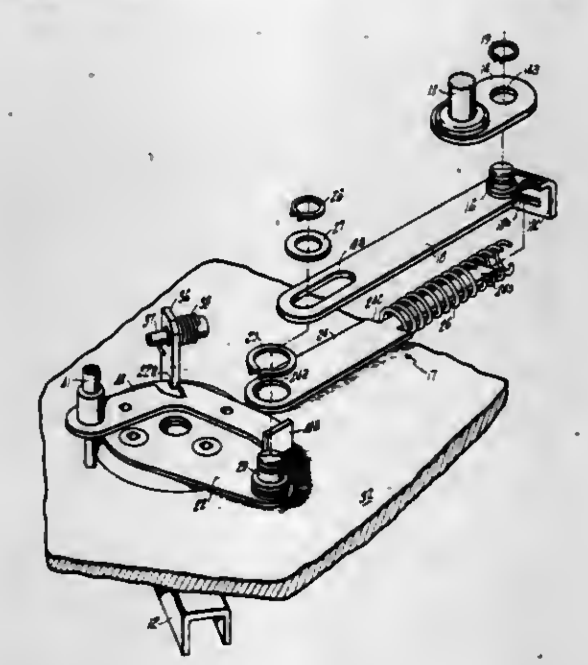

1. In a circuit breaker equipped with a motor operator mechanism functioning to reciprocate a circuit breaker operator member through an operating cycle consisting of a first stroke in one direction away from a home position and a second stroke in the opposite direction back to the home position, the motor operator mechanism including a unidirectionally rotating output shaft to which is affixed a first crank arm, and a second crank arm drivingly coupled with the operator member, variable drive coupling apparatus comprising, in combination:
A. linkage means drivingly interconnecting the first and second crank arms such that, for each revolution of the first crank arm, the second crank arm is propelled through successive, oppositely directed throws effective in motivating the operator member through its first and second strokes;
B. switch means acting in response to the arrival of the operating member at its home position at conclusion of the second stroke to deactivate the motor operator mechanism;
C. latch means operative to latch the operator member in its home position upon its arrival thereat at the conclusion of the second stroke and to unlatch the operator member from its home position in response to reactivation of the motor operator mechanism to begin an operating cycle;
D. a lost motion coupling between said linkage means and one of the crank arms for establishing a full effective driving length in said linkage means to propel the operator member through its second stroke, upon arrival of the operator member at its home position, said coupling accommodating a reduction in the effective driving length of said linkage means, the limits of said lost motion coupling defining a braking zone through which the first crank arm may revolve while the operator member is latched in its home position by said latch means;
E. resilient means acting in opposition to the reduction of the linkage means effective driving length during said braking zone for absorbing the kinetic energy of the deactivated motor operator mechanism, upon unlatching of the operator member from its home position prior to the arrival of the first crank at the end of said braking zone, said resilient means discharging its absorbed energy to propel the operator member into its first stroke and to restore and maintain the full effective driving length of said linkage means for the remainder of the first stroke and throughout the second stroke.

4,300,028
ROTARY SWITCH FOR GAS-INSULATED SUBSTATIONS
John C. Cronin, Limerick, Ireland, and Walter M. Wilson, Greensburg, Pa., assignors to Gould Inc., Rolling Meadows, Ill.
Filed Sep. 25, 1979, Ser. No. 78,801
Int. Cl.³ H01H *19/28*
U.S. Cl. 200—155 R **6 Claims**

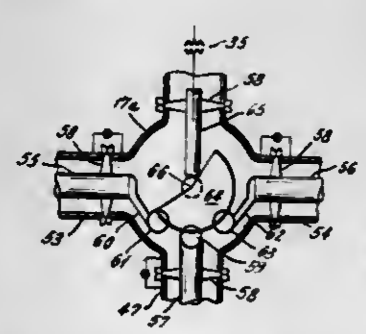

1. A rotary selector switch comprising:
a conductive housing filled with an insulative gas;
a conductive blade contained in said housing and mounted therein for rotation about an axis, said blade having the general form of a portion of a disc;
central contact means disposed at said axis and in electrical contact with said blade; and
first, second and third terminal contact means disposed in said housing and adapted to engage an edge of said blade and disposed within said housing at positions angularly displaced apart from each other with respect to said axis about which said blade is rotatable, said blade being so shaped and so mounted as to be selectively rotatable to move into and out of mechanical and electrical contact with each combination of said first, second and third terminal contact means.

4,300,029
REMOTE MEMBRANE SWITCH
Thomas L. Maser, Whitefish Bay, Wis., assignor to W. H. Brady Co., Milwaukee, Wis.
Filed Jan. 9, 1980, Ser. No. 110,645
Int. Cl.³ H01H *3/12; 3/20*
U.S. Cl. 200—159 B **8 Claims**

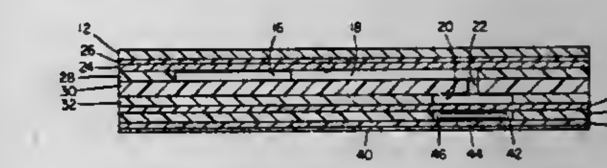

1. A multi-layered flexible switch comprising:
a first chamber-defining layer,
a second, apertured, chamber-defining layer beneath said first layer,
a third chamber-defining layer beneath said second layer,
said second chamber-defining layer being less flexible than said first chamber-defining layer, and
said third chamber-defining layer cooperating with said first chamber-defining layer and said second chamber-defining layer to define a primary chamber,
switch chamber means transversely spaced from said primary chamber to define a switch chamber,
said switch chamber being partially defined by a switch chamber-defining flexible layer carrying in said switch chamber a first contact normally spaced from a second contact, which switch chamber-defining flexible layer when depressed brings said contacts together, and
means providing a transversely-extending conduit from said primary chamber to said switch chamber-defining flexible layer for transmitting pressure generated in said primary chamber by depression of said first layer to said switch chamber-defining flexible layer to thereby activate said switch.

4,300,030
HANDLE BLOCKING MEANS FOR CIRCUIT BREAKER
Bernard Dimarco, Bellefontaine, and Andrew J. Kralik, Marysville, both of Ohio, assignors to Gould Inc., Rolling Meadows, Ill.
Filed Dec. 17, 1979, Ser. No. 104,622
Int. Cl.³ H01H *9/28*
U.S. Cl. 200—42 T **17 Claims**

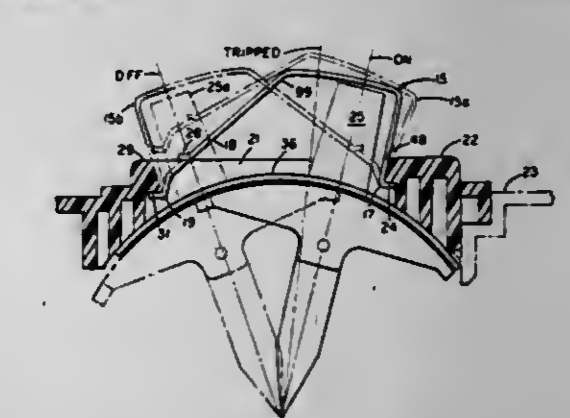

1. A handle blocking attachment for detachable mounting to and use with a switch including a front cover having an aperture equipped with first and second seating formations at opposite first and second ends of said aperture and a contact operating handle extending externally of the cover through said aperture and reciprocable parallel to the sides of said aperture between the ends of said aperture to open and closed contact positions as well as to a tripped-open position intermediate the open and closed contact positions, said attachment comprising:
oppositely facing first and second holding tabs extending outward from the respective first and second ends of said

attachment for engagement with seating formations in said front cover at opposite ends of said aperture;

a main section forward of said first tab defining a freeway through which a handle is movable from a first position at said first end to an intermediate position located a substantial distance toward said second end;

a blocking section between said main section and said second tab to limit movement of a switch handle beyond said intermediate position toward said second end; and

a tool receiving formation disposed in the vicinity of one of said tabs to receive a tool through which a force is applied to said attachment in a direction resulting in a relatively inward movement of said tabs.

4,300,031

METHOD FOR INDUCTION BUTT-WELDING METAL PARTS, IN PARTICULAR PARTS OF IRREGULAR CROSS-SECTION

Jean Reboux, and Jean-Pierre Lamote, both of Paris, France, assignors to Tocco-Stel, Paris, France

Continuation of Ser. No. 930,844, Aug. 4, 1978, abandoned. This application Apr. 4, 1980, Ser. No. 137,185

Claims priority, application France, Aug. 5, 1977, 77 24222

Int. Cl.³ H05B *6/06, 6/44*

U.S. Cl. 219—10.41 **4 Claims**

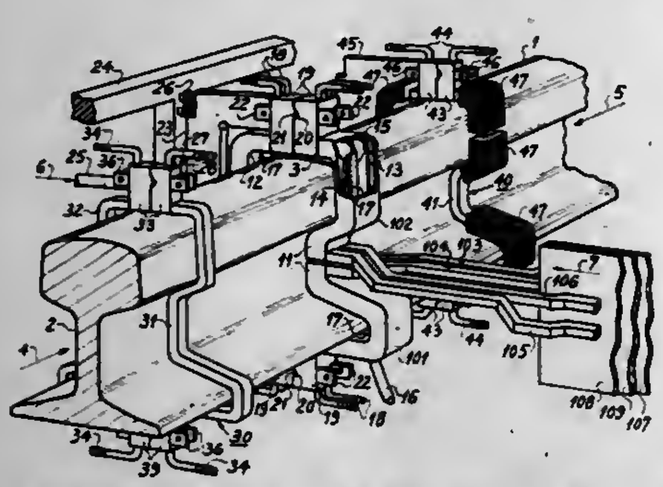

1. A method for induction butt-welding of elongated metal parts of irregular cross-section having respective longitudinal axes and flat abutting ends normal to said axes, employing a single-turn inductor enclosing the adjoining butt ends and having an inner face substantially parallel to the cross-sectional contour of the parts, when its movable two halves from which it is made up, are brought into contact together prior to applying thereto an alternating current from a low-impedance secondary winding of an impedance matching transformer whose high-impedance primary forms, together with a switchable bank of capacitors connected in parallel thereto, a parallel resonant tank circuit connected to the output terminals of an inverter capable of operating at at least two different frequencies for supplying thereto an alternating current of a frequency to which the loaded tank circuit is tuned, prior to closing the inductor and to its subsequent feeding by the starting of the inverter, the registering abutting ends of the parts being pressed one against the other with a predetermined initial pressure, and substantially at the end of the heating by the current supplied to the inductor they are being pressed together by a predetermined forging pressure which is from three to more than six times higher than said initial one, the following combination of steps:

(a) closing by bringing together into contact of two short-circuited turns respectively similarly made up from two halves as said inductor, simultaneously with the closing thereof, said short-circuited turns similarly having inner faces respectively surrounding said two parts substantially in parallel to their cross-sectional contours and which are disposed at predetermined distances to either side and respectively symmetrically relatively to said inductor whose cross-sectional plane is substantially aligned with the interface of the abutting ends and maintaining their closure while the inductor is being fed, whereby to restrict the depth of the inductively heated zones to either side of said interface and limit the dimensions of the projecting bulges due to the upset caused by the forging pressure; and

(b) thereafter switching the bank of capacitors so that it presents its first, higher capacitance which determines the first, lower resonant frequency of the tank circuit, and subsequently operating the inverter at a frequency corresponding to said first one for a first predetermined time interval, the switching over of the capacitor bank so that it presents its second, lower capacitance which determines the second resonant frequency of the tank circuit which is two to four times higher than the first and subsequently operating the inverter at a frequency corresponding to the second one during a second predetermined time interval, whereby to obtain a more uniform cross-sectional heat distribution, whereby the combination of said steps allows to reduce loss of heat energy by concentrating it to the useful zones of the abutting end and shortens the overall heating time.

4,300,032

OUTPUT CONTROL APPARATUS FOR A MICROWAVE OVEN

Tokihide Nin, Osaka; Takayoshi Yuuzu, Higashi-Osaka; Ikuzo Abe, Ikeda, and Koichi Shigematsu, Kawanishi, all of Japan, assignors to Matsushita Electric Industrial Co., Ltd., Osaka, Japan

Continuation of Ser. No. 727,615, Sep. 28, 1976, abandoned. This application Jul. 21, 1980, Ser. No. 171,909

Claims priority, application Japan, Oct. 2, 1975, 50-119526; Oct. 2, 1975, 50-119540

Int. Cl.³ H05B *6/66*

U.S. Cl. 219—10.55 B **2 Claims**

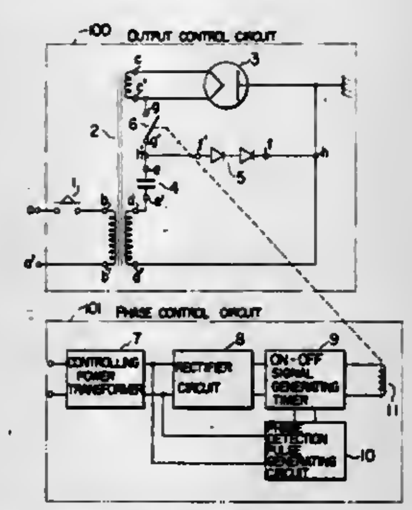

1. An output control apparatus for a microwave oven comprising:

a rectifier circuit having a serially connected rectifier element and a capacitor connected to a secondary winding of a transformer, the primary winding of said transformer being connected to a voltage source;

a magnetron having an anode and a cathode connected to an output side of said rectifier circuit, a filament of said magnetron being connected to a third winding of said transformer;

a high voltage mechanical switch having a pair of contacts actuated by an exciting coil connected between the cathode of said magnetron and the junction of said capacitor and said rectifier element; and

a phase control circuit including said exciting coil coupled to said high voltage mechanical switch for generating an on-off control signal and for controlling the actuation of said high voltage mechanical switch, said phase control circuit further including;

a phase detection pulse generating circuit having an input terminal connected to the primary winding of said transformer for detecting the voltage phase of said voltage source and for generating a pulse signal having a predetermined phase relationship with said voltage phase, and

an on-off signal generating timer circuit connected to said phase detection pulse generating circuit for generating said on-off control signal in response to said pulse signal, said timer circuit being responsive to said pulse signal to generate said on-off control signal to begin closing said high voltage mechanical switch after the lapse of a delay time (t_0) required for actuating the contacts by an exciting current through said exciting coil and to complete closing said switch within a period during which the voltage across said rectifier is lower than the oscillation starting voltage of said magnetron, and to open said high voltage mechanical switch after lapse of a delay time (t_0'') required for actuating the contacts and within a half-wave time period during which the polarity thereof permits no current to flow through said magnetron.

4,300,033

REDUCED OPERATING NOISE NOZZLE FOR ELECTRIC ARC CUTTING DEVICE

Henry A. Scarton, Troy, N.Y.; Warren C. Kennedy, Pittsburgh, Pa., and John F. McDonald, Clifton Park, N.Y., assignors to Rensselaer Polytechnic Institute, Troy, N.Y.

Filed Jun. 14, 1979, Ser. No. 48,387

Int. Cl.³ B23K *9/16*; B23P *1/00*; B23K *9/28*

U.S. Cl. 219—70 **5 Claims**

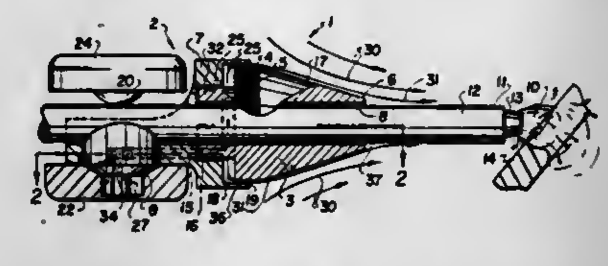

1. A reduced operating noise nozzle for a cutting device using at least one electrode and an electric arc for melting material of a workpiece to cut the workpiece and compressed gas to blow the melted material away, comprising, flow defining means disposed around an electrode of the device which leaves an end of the electrode exposed, said flow defining means having an outer surface surrounded with air and tapered from a large diameter end spaced from the arc at the electrode exposed end to a small diameter end facing the arc, and pressure gas means associated with said flow defining means for directing a substantially annular flow of gas from said large diameter end along said outer surface toward said small diameter end, whereby the gas flow entrains the air surrounding said outer tapered surface and directs the air toward the arc for blowing material away which has been melted by the arc, said flow defining means comprising a tapered nose piece having a large diameter end and a small diameter end, a nozzle body connected to said nose piece adjacent said large diameter end, said nozzle body including a recess and an annular gas chamber defined between said recess and said nose piece, and means between said large diameter end of said nose piece and said nozzle body defining gas passages communicating with said annular chamber, said small diameter end of said nose piece being slightly larger than the diameter of the electrode and said outer tapered surface being substantially continuous with an outer surface of the electrode to form said annular gas flow toward the arc.

5. A method of operating an arc electrode and nozzle using compressed air for gouging a metal workpiece so as to reduce the noise of operation thereof and to reduce the noise of cutting away the workpiece comprising: directing air in an annular flow path directly surrounding the nozzle over the surface of the nozzle and downwardly along the nozzle in a confined annular inwardly tapering flow path over a contiguous outer surface of the electrode toward the workpiece so as to increase the quantity of air at the workpiece and the tip of the electrode by entraining additional air surrounding the electrode and nozzle to reduce aerodynamic jet noise, and leaving the space surrounding the electrode and nozzle free.

4,300,034

GAS TUNGSTEN ARC WELDING TORCH

Urban A. Schneider, St. Petersburg; Robert E. Monley, Tampa; Raymond H. Glatthorn, St. Petersburg, and Robert L. Nelson, Tampa, all of Fla., assignors to Westinghouse Electric Corp., Pittsburgh, Pa.

Filed Sep. 20, 1979, Ser. No. 77,210

Int. Cl.³ B23K *9/16*

U.S. Cl. 219—75 **4 Claims**

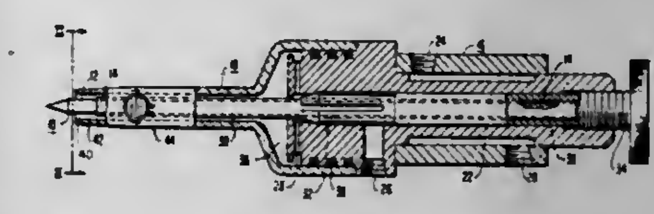

1. A gas tungsten arc welding torch comprising:

a main torch body;

a nonconsumable welding electrode electrically coupled through and supported by the main torch body with one end extending therefrom, the electrode including a solid tungsten rod center and a concentric outer sleeve substantially lower in electrical resistivity than the tungsten rod, adhesively and cohesively bonded to the tungsten;

an elongated gas nozzle coupled at one end to the main torch body and surrounding a substantial portion of the extended length of the welding electrode, communicably coupling with a gas port within the main torch body and defining a gas passage along the extended length of the electrode; and

a replaceable gas lens disposed within the gas passage of the nozzle substantially adjacent the extended end of the nozzle and traverse to the direction of gas flow, for establishing a laminar flow of gas parallel to the electrode downstream of the lens, the lens being supported by the nozzle and detachable therefrom for easy replacement and the outer sleeve of the electrode extending from the point of electrical connection within the main torch body to a point on the tungsten electrode downstream of the gas lens.

4,300,035

WELDING APPARATUS WITH TIME INTERVAL CONTROL

Rune L. Johansson, Älvängen, Sweden, assignor to Thermal Dynamics Corporation, West Lebanon, N.H.

Filed May 29, 1979, Ser. No. 43,606

Claims priority, application Sweden, May 30, 1978, 7806255

Int. Cl.³ B23K *9/10*

U.S. Cl. 219—130.21 **19 Claims**

1. An apparatus for short-arc welding comprising a controllable current source, means for controllably feeding a wire-like consumable electrode of additive material to a weld location, and a control unit for automatically adjusting the current source in dependence upon the welding seqoence, said current source being arranged to provide welding periods divided into short-circuit intervals, arc intervals and optional rest intervals, characterized in that the control unit includes adjusting means for adjusting the power output delivered by the current source

in response to variations of the duration from a reference duration of at least one of said intervals in a sequence of weld-

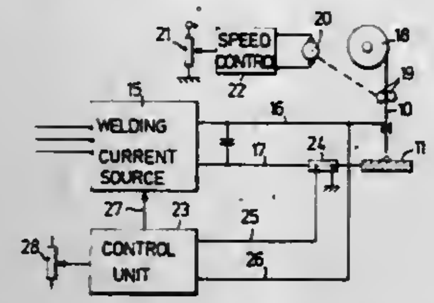

ing periods to cause said at least one interval to return to said reference duration.

4,300,036
WELDING APPARATUS WITH ARC INTERVAL ENERGY CONTROL
Rune L. Johansson, Älvängen, Sweden, assignor to Thermal Dynamics Corporation, West Lebanon, N.H.
Filed May 29, 1979, Ser. No. 43,577
Claims priority, application Sweden, May 30, 1978, 7806256
Int. Cl.³ B23K *9/12*
U.S. Cl. 219—130.33 15 Claims

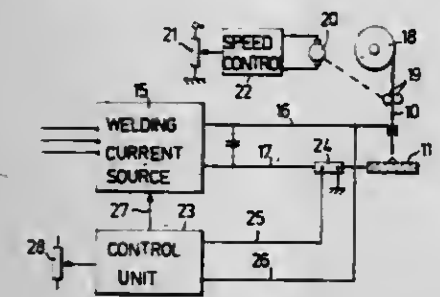

1. An apparatus for short-arc welding, comprising a controllable current source, means for controllably feeding a wire-like consumable electrode comprising additive material to a weld location, and a control unit for automatically adjusting the current source in dependence upon the welding sequence, said current source being arranged to provide welding periods divided into short-circuit intervals and arc intervals and optionally rest intervals, characterized in that said control unit includes adjusting means for maintaining a preset dependent relationship between arc interval energy and short-circuit interval energy.

4,300,037
ELECTRONIC CONTROL SYSTEM FOR A RADIANT FURNACE
Harvey F. Padden, Wayne, N.J., assignor to Oxy Dental Prod. Inc., Irvington, N.J.
Filed Sep. 4, 1979, Ser. No. 72,010
Int. Cl.³ H05B *1/02*
U.S. Cl. 219—497 8 Claims

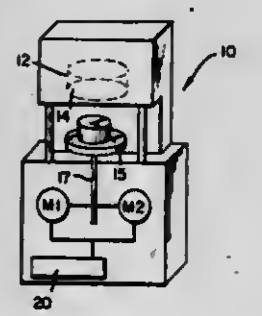

1. A control system for operating a radiant furnace having a furnace chamber, heating elements for applying radiant energy to said chamber and movable platform means for supporting porcelain ceramic material to be cured at a controlled temperature level within said chamber; said control system comprising:

first presettable means for generating a low temperature control signal representative of a preselected low temperature setting;

second presettable means for generating a high temperature control signal representative of a preselected high temperature setting;

means for generating a sensor signal responsive to the furnace temperature in said chamber;

ramp signal generating means for generating a linearly varying ramp output singal of predetermined slope;

means responsive to said low temperature control signal and to the furnace temperature in said chamber for disabling said ramp signal generating means until the furnace temperature in said chamber is equal to said preselected low temperature setting;

summing means for algebraically summing said low temperature control signal, said ramp output signal and said sensor signal to produce an error signal;

polarity detector means responsive to said error signal for generating a heat control signal having a first logical level when said error signal is of a first polarity and having a second logical level when said error signal is of a second polarity opposite said first polarity;

power supply circuit means responsive to said heat control signal for applying electrical energy to said heating elements when said heat control signal is at said first logical level; and

means responsive to said high temperature control signal and said sensor signal for applying a strobe signal to said polarity detector means when said sensor signal reaches said high temperature setting so as to cause the logical level of said heat control signal to revert to said second logical level independent of said error signal.

4,300,038
ELECTRIC CARTRIDGE HEATER
Eugen Schwarzkopf, Lüdenscheid, Fed. Rep. of Germany, assignor to Firma Hotset Heizpatronen und Zubehor GmbH, Fed. Rep. of Germany
Filed Jul. 2, 1980, Ser. No. 165,350
Claims priority, application Fed. Rep. of Germany, Aug. 17, 1979, 2933376
Int. Cl.³ H05B *3/44*
U.S. Cl. 219—544 2 Claims

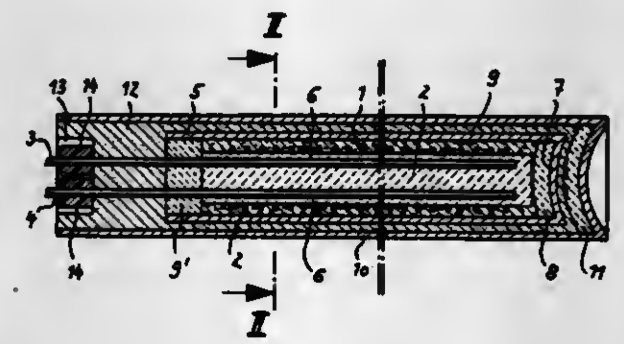

1. Electric cartridge heater consisting of at least one electrical heating conductor arranged in a metallic and particularly cylindrical casing and held on a support of insulating material, the ends of said heating conductor being each connected to a lead, which leads are of lower electrical resistance than the heating conductor and are extended to the open end of the casing which is closed at one end and electrically insulated from the heating conductor where said leads emerge, the insulating material present between the casing and the heating conductor being compacted by reduction of the casing, the said cartridge heater being inserted into a second larger matallic casing which is similar in shape to the cartridge heater, and highly compacted insulating material being arranged between the two metallic casings which are arranged coaxially to and spaced apart from each other, and the cartridge heater having been subjected to high temperature both before and after its insertion into the second metallic casing, the outer casing and the insulation being arranged between the casings and extending beyond the mouth of the inner casing closing off the outer casing by a distance about equal to the diameter of the outer casing, and a depression arranged in spaced relationship from the metallic casings in the free-end side of the insulation.

4,300,039
INCREMENTAL ENCODER
Jeremiah Y. Avins, Kendall Park, N.J., assignor to RCA Corporation, New York, N.Y.
Filed Nov. 13, 1979, Ser. No. 93,230
Int. Cl.³ G06F *7/38*
U.S. Cl. 235—92 EV 10 Claims

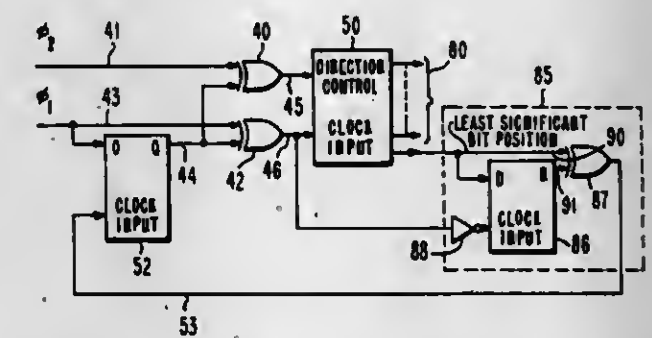

1. A circuit for detecting each level transition of a first two level signal of a given frequency and its leading or lagging phase relationship with a second two level signal of said given frequency at the time of each level transition of said first signal, said circuit comprising:

signal level storage means having a first data input terminal for receiving said first signal, a first output terminal, and a first clock pulse input terminal, and constructed to store a signal level supplied to its data input terminal and to transfer said stored signal level to its output terminal when a clock pulse is supplied to its clock pulse input terminal;

first and second voltage comparator means each having a first input terminal for receiving said first and second signals, respectively, a second input terminal connected to said first output terminal, and a second output terminal, and each responsive to equal or non-equal signal levels supplied to its first and second input terminals to produce first and second output signal levels, respectively;

first means responsive to the output signal levels of said first and second voltage comparator means to determine the leading or lagging phase relationship of said first and second signals at each level transition of said first signal; and

second means for supplying a clock pulse to said first clock pulse input terminal a predetermined time after the occurrence of each level transition of said first signal.

4,300,040
ORDERING TERMINAL
Geroge K. Gould, Pound Ridge, and Eric Steinberg, Bronx, both of N.Y., assignors to Video Corporation of America, New York, N.Y.
Filed Nov. 13, 1979, Ser. No. 93,893
Int. Cl.³ G07F *7/08*
U.S. Cl. 235—381 7 Claims

1. A terminal at which a customer can preview desired videocassette program material and order such material, such order being processed at a processing location remote from said terminal, comprising means for selecting the desired videocassette program material, control means including a memory for storing data coupled to said selection means to receive and store data corresponding to the desired videocassette program material, means coupled to said control means for communicating data between selected memory locations in said control means and said processing location so that orders for selected videocassette program material can be processed at the processing location and the selected videocassette program material supplied to the customer, preview display means coupled to said control means for providing optional preview of said videocassette program material prior to selecting the

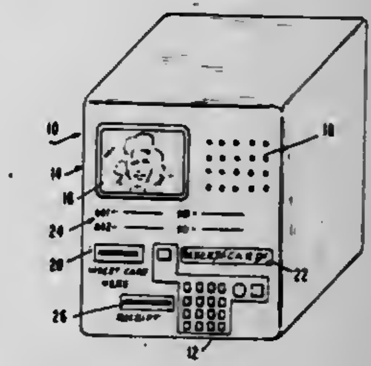

desired videocassette material, said preview display means being adapted to successively display a plurality of previews of respective videocassette program materials for which orders can be placed by said customer from said terminal, and preview selection means coupled to said control means for altering the operation of said display means to permit selected videocassette program material to be displayed on said display means.

4,300,041
MAGNETIC CODED CARD ACCEPTOR
Donald Nama, 37215 E. Benton Rd., Rancho California, Calif. 92390
Filed Oct. 25, 1979, Ser. No. 88,028
Int. Cl.³ G06K *7/08, 13/08;* G07F *1/06*
U.S. Cl. 235—449 6 Claims

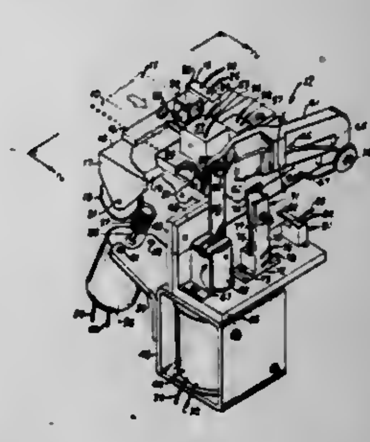

1. A magnetic coded card acceptor for use in a prepaid fee collection system, said system including in combination

a smooth flexible magnetic coded card having a continuous magnetic code along its entire length, and

a card presence detector electrically coupled to a system conditioning means to provide an output indicative of the entry of a card into said system,

a card drive means having forward and reverse circuits, at least one decoder electrically coupled respectively to a magnetic card code reading mechanism and said system conditioning means; said decoder responsive to a magnetic code detected when said system conditioning means provides said output, said decoder having at least a good code output and a bad code output,

a good and bad code control circuit electrically coupled respectively to said decoder and to a forward drive canceling and reverse initiating means; said forward drive canceling and reverse initiating means are electrically coupled to said system conditioning means,

a card travel limit stop and card shear actuating mechanism

electrically connected respectively to said forward drive canceling and reverse initiating means; said magnetic card code reading mechanism and said card drive means and a card shear mechanism; said card travel limit stop and card shear actuating mechanism including means to simultaneously interrupt the operation of said card drive means and said magnetic card code reading mechanism,

a prepaid fee collected and magnetic coded card drive reversing mechanism electrically coupled respectively to said good and bad code control circuit and said forward drive canceling and reverse initiating means,

said prepaid fee collected and magnetic coded card drive reversing mechanism operatively coupled to said card shear actuating mechanism and electrically coupled to a device to be controlled by said prepaid fee.

4,300,042

MAGNETIC STRIPE CARD AUTHOR

Ralph J. Oldenkamp, Oakland, and Frederic D. Weekes, Berkeley, both of Calif., assignors to Vendacopy, Inc., Foster City, Calif.

Filed Apr. 8, 1980, Ser. No. 138,390

Int. Cl.³ G06K *7/08*; G06F *7/38*

U.S. Cl. 235—449 **7 Claims**

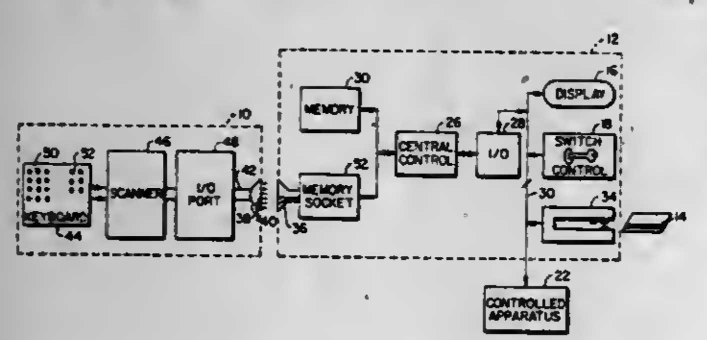

1. An apparatus for registering magnetic data on a magnetic stripe of a magnetic card insertable in a controller of the type having internal programmed memory, a microprocessor central control unit, input/output means including an output display means and a card reader/writer means and a memory socket means wherein said controller is for supervising accounting and control functions of a vending machine such as a photocopy type duplicator, said controller having no keyboard means for manually accessing said central control unit to modify said magnetic data except by normal vending machine operation, said data registering apparatus comprising:

keyboard means having numerical value input key functions and command input key functions;

means coupled to said keyboard means for interpreting input signals generated by manual operation of said keyboard means and to generate input data;

means coupled to said interpreting means for temporarily storing said data and for transferring said input data in parallel upon receipt of an external signal to a bus means;

bus means coupled to said storing and transferring means;

connector means coupled to said bus means for communicating said data to said memory socket means, said connector means being removably connectable with said memory socket means; and

means for signaling connection between said connector means and said memory socket means such that said central control unit is responsive to said generated input data.

4,300,043

STABILIZED RADIOACTIVE LOGGING METHOD AND APPARATUS

Carl A. Robbins, Houston, Tex., assignor to Halliburton Company, Duncan, Okla.

Filed May 29, 1979, Ser. No. 43,598

Int. Cl.³ G01V *5/00*; G01T *1/20*

U.S. Cl. 250—262 **15 Claims**

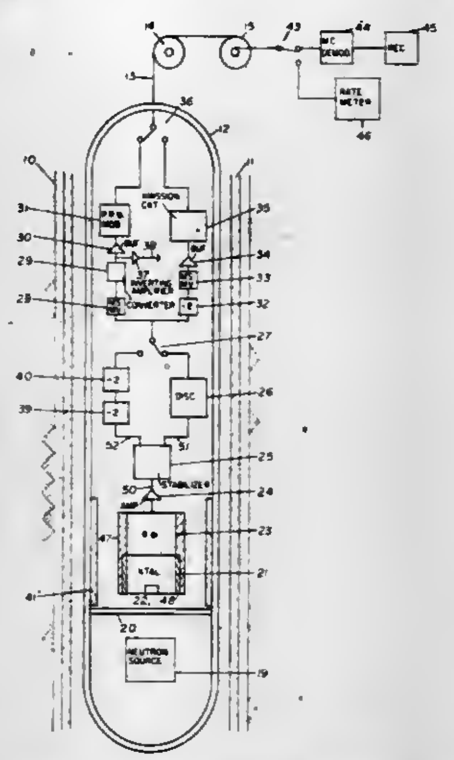

1. In a radiation detector having a scintillation crystal, a photomultiplier tube for generating electrical pulses proportional to light flashes in the crystal, and an amplifier having an adjustable gain for amplifying the electrical pulses, a gain stabilizing means comprising:

a radiation source located in said crystal at an end thereof opposite from said photomultiplier, said source emitting monoenergetic radiation having an energy peak outside the range of energy levels being examined by said radiation detector and shielding means around said scintillation cyrstal for shielding said crystal from radiation having energy equal to the energy of said radiation source; and

electrical means connected to the adjustable gain of said amplifier and responsive to the pulses from said photomultiplier tube for adjusting the gain of said amplifier until the pulses generated by said photomultiplier tube responsive to said monoenergetic radiation are of a predetermined height.

4,300,044

METHOD AND APPARATUS FOR THE ANALYSIS OF CHEMICAL COMPOUNDS IN AQUEOUS SOLUTION BY MASS SPECTROSCOPY OF EVAPORATING IONS

Julio V. Iribarne, 29 Banstock Dr., Willowdale, Ontario, Canada M2K 2H5, and Bruce A. Thomson, 144 Lake Promenade, Toronto, Ontario, Canada (M8W 1A5)

Filed May 7, 1980, Ser. No. 147,485

Int. Cl.³ B01D *59/44*

U.S. Cl. 250—282 **5 Claims**

1. A method for analysis of chemical compounds comprising forming at or near normal room temperature a fine droplet spray of a solution containing the compound to be detected and analyzed, electrically charging the spray droplets and allowing said spray to evaporate such that either ionized molecules or atoms of the compound of interest or the neutral species attached to another ion are ejected into the air, introducing the ions which may or may not be clustered with neutral solvent molecules into a mass spectrometer, and obtaining

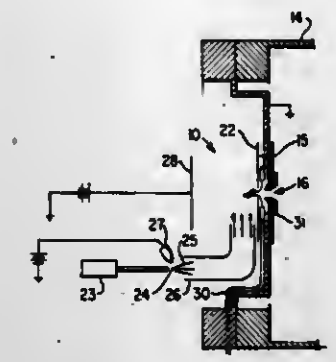

mass spectrum a read-out indicative of the chemical compound is obtained.

4,300,045

BEAM GUIDANCE FOR ELECTRON BEAM TESTS, AND ELECTRON IMPACT SPECTROMETER HAVING SUCH BEAM GUIDANCE

Harald Ibach, Aachen-Verlautenheide; Hermann Froitzheim, AAchen; Heinz-Dieter Bruchmann, and Sieghard Lehwald, both of Jülich, all of Fed. Rep. of Germany, assignors to Kernforschungsanlage Jülich Gesellschaft mit beschrankter Haftung, Jülich, Fed. Rep. of Germany

Filed Dec. 27, 1979, Ser. No. 107,592

Claims priority, application Fed. Rep. of Germany, Dec. 27, 1978, 2856244

Int. Cl.³ H01J *40/00*, *47/00*

U.S. Cl. 250—305 **7 Claims**

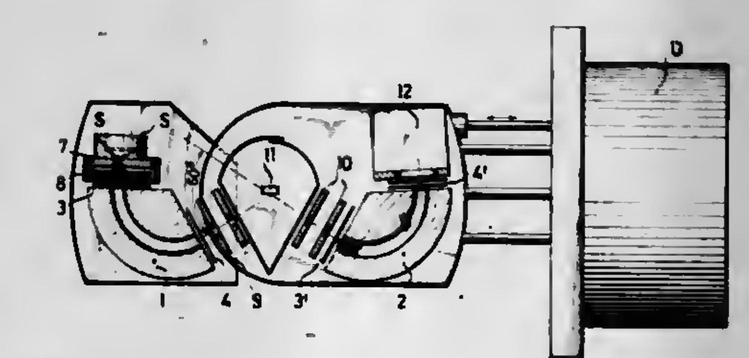

1. An electron impact spectrometer having a beam guidance for use on test samples for electron beam tests, especially of solid bodies, comprising in combination:

emission and bundling systems for cathodically emitting and electron-optically bundling electrons;

at least one cylinder condenser deflection unit means for subjecting electrons to an energy selection, said means being provided with diaphragm means for the input and output of electrons; and

a detector for detecting electrons subjected to energy selection, said emission and bundling systems being adapted to the focusing of electrons only in a plane perpendicular to the axis of said cylinder condenser deflection unit onto the input of the condenser and at right angles thereto onto said detector,

said deflection unit means including two cylinder condenser deflection units of which one operates as a monochromator with an inlet baffle means and the other as an analyzer;

an emission and bundling system encompassing a cathode and a first lens system for focusing cathodically emitted electrons onto the input of a cylinder condenser monochromator for energy selection of electrons which focusedly leaving said monochromator strike upon said test sample;

a cylinder condensor analyzer associated with said monochromator and being provided with an output means for passage of electrons to a detector;

a second lens system, arranged between said monochromator and said analyzer, for guidance of electrons reflected at said test sample, said emission and bundling system being arranged relative to said monochromator cylinder axis in such a way that electrons, at right angles to said cylinder axis, are focused upon the input of said monochromator, while parallel to said cylinder axis, electrons are focused upon said detector.

4,300,046

PANEL TYPE X-RAY IMAGE INTENSIFIER TUBE AND RADIOGRAPHIC CAMERA SYSTEM

Shih-Ping Wang, Los Altos, Calif., assignor to Diagnostic Information, Inc., Sunnyvale, Calif.

Division of Ser. No. 923,719, Jul. 12, 1978, Pat. No. 4,186,302, and Ser. No. 853,440, Nov. 21, 1977, Pat. No. 4,140,900, and a continuation-in-part of Ser. No. 741,430, Nov. 12, 1976, abandoned, and Ser. No. 763,637, Jan. 28, 1977, abandoned. This application Aug. 31, 1979, Ser. No. 71,701

Int. Cl.³ G03B *41/16*

U.S. Cl. 250—323 **1 Claim**

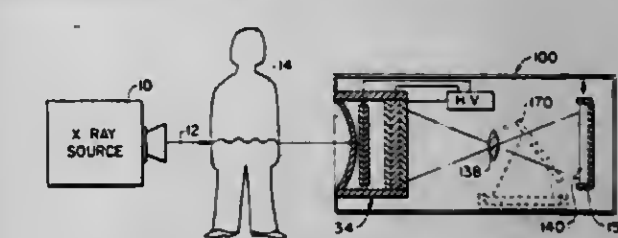

1. A method of making a medical diagnostic x-ray photograph comprising the steps of projecting a beam of x-rays, at a dosage of 30–100 Kev, through a patient to produce an x-ray shadow image, converting the x-ray shadow image into a corresponding light pattern image, converting the light pattern image into a corresponding photo-electron pattern image, converting the photo-electron pattern image by uniformly accelerating all parts of the photo-electron pattern image over an uninterrupted distance of from 2 to 25 mm. with an electrostatic potential of at least 10,000 volts to impinge upon an output phosphor display screen, optically reducing the size of the intensified light pattern image by a factor of from 1.5 to 4 and recording the reduced image on photographic film having a diagonal dimension which is substantially the same size as the diagonal dimension of the reduced image.

4,300,047

METHOD AND APPARATUS FOR DETECTING INFRARED RAYS AND CONVERTING INFRARED RAYS TO VISIBLE RAYS

Masaharu Fujii, Tokyo, and Kenichi Nakamura, Iwaki, both of Japan, assignors to Kureha Kagaku Kogyo Kabushiki Kaisha and Aska Electrons Co., both of Tokyo, Japan

Filed Feb. 29, 1980, Ser. No. 125,987

Claims priority, application Japan, Mar. 12, 1979, 54-28350; Mar. 12, 1979, 54-28351

Int. Cl.³ H01J *31/49*; G01J *1/00*

U.S. Cl. 250—330 **15 Claims**

1. An apparatus for detecting and visualizing infrared rays comprising an infrared detector which has pyroelectric element having a thin pyroelectric layer and a mechanism for visualizing infrared rays, said mechanism comprising an infrared-sensitive phosphor layer located on the same optical path of the infrared rays as that for the pyroelectric element, wherein one of either the pyroelectric element or the infrared-

sensitive phosphor layer is capable of transmitting at least a part of the incident infrared rays therethrough, the other of the

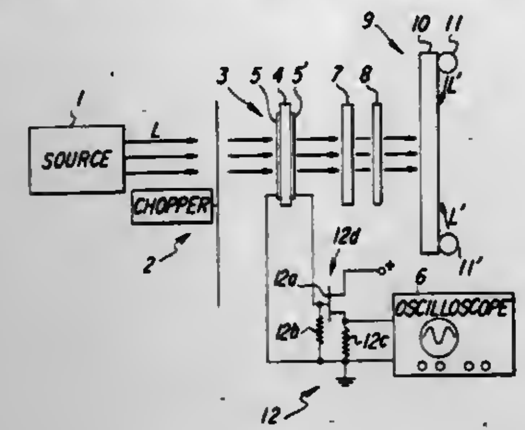

pyroelectric element or the infrared-sensitive phosphor layer receives the thus transmitted infrared rays.

4,300,048
ALARM DETECTOR RESPONSIVE TO RATE CHANGE OF A MONITORED CONDITION
Daniel Barbier, Echibolles; Jean-Michel Ittel, Seyssinet-Pariset, and Robert Poujois, Grenoble, all of France, assignors to Commissariat a l'Energie Atomique, Paris, France
Division of Ser. No. 804,482, Jun. 7, 1977, which is a continuation of Ser. No. 538,218, Jan. 2, 1975, Pat. No. 4,065,758. This application Jan. 27, 1979, Ser. No. 53,141
Claims priority, application France, Jan. 4, 1974, 74 00295
Int. Cl.³ G01J *1/00*
U.S. Cl. 250—338 3 Claims

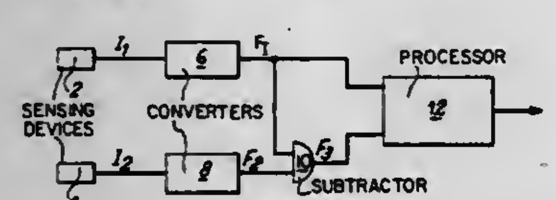

1. An infrared and temperature sensing device comprising a photodiode, means for applying a reverse-biasing voltage to said photodiode and means for withdrawing the leakage current from said photodiode, said leakage current being representative of infrared radiation impinging on said photodiode and the ambient temperature of the environment of said photodiode.

4,300,049
DYNAMICALLY STANDARDIZED RADIANT ENERGY METHOD AND APPARATUS FOR PLURAL CHANNEL GAIN INDEPENDENT MATERIAL PROPERTY MEASUREMENT
Steven P. Sturm, Columbus, Ohio, assignor to AccuRay Corporation, Columbus, Ohio
Filed Feb. 27, 1980, Ser. No. 125,225
Int. Cl.³ G01J *1/00*; G01D *18/00*
U.S. Cl. 250—339 48 Claims

1. A method for determining a property of a material, utilizing source means for producing source radiation including measuring radiation and reference radiation, a measuring information channel including a detector for the measuring radiation, and a reference information channel including a detector for the reference radiation, the source means and the information channels being utilized in both an operating mode and an alternative standardizing mode, the method comprising

producing a channel-monitoring radiation;

in the standardizing mode, deriving a monitor-standardization response from each of the two channels while passing monitoring radiation to both detectors;

in the standardizing mode, deriving a source-standardization response from each of the two channels while passing measuring radiation to the measuring detector and passing reference radiation to the reference detector;

in the operating mode, deriving an operation-monitoring response from each of the two channels while passing monitoring radiation to both detectors;

in the operating mode, deriving a material-condition response from each of the two channels while directing source radiation into the material, and passing to the respective measuring and reference detectors measuring and

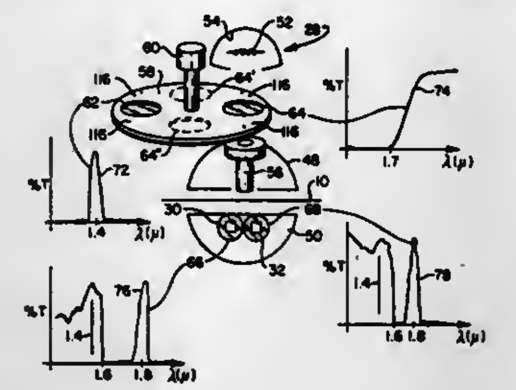

reference radiation that has interacted with the material, and

responding to the monitor-standardization responses, the source-standardization responses, the operation-monitoring responses and the material-condition responses so as to produce a material property response that is effectively standardized and substantially independent of gain changes occurring in either one or both of the measuring and reference information channels.

4,300,050
SECONDARY-STANDARD IONIZATION CHAMBER, IN PARTICULAR FOR MEASURING THE ENERGY DOSE
Jozsef Hizo, Budapest, Hungary, and Klaus Duftschmid, Gumpolskirchen, Austria, assignors to Österreichisches Forschungszentrum Seibersdorf GmbH, Vienna, Austria
Filed Mar. 10, 1980, Ser. No. 128,528
Claims priority, application Hungary, Mar. 12, 1979, OA 618
Int. Cl.³ H01J *39/28*; G01D *18/00*
U.S. Cl. 250—374 12 Claims

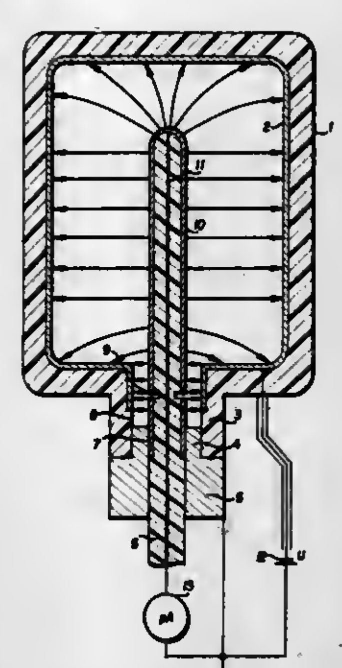

1. An ionization chamber useful as a dosimetric secondary calibration standard having a chamber wall with a neck part and being closed on all sides, an air compensation orifice, an outer electrode formed by a conductive coating on the inner surface of the chamber wall, an inner electrode and an electrically conductive ring surrounding the neck part of the chamber wall, wherein:

said chamber wall has an electromagnetic radiation absorption characteristic equivalent to air, tissue or water, said chamber wall consisting of at least 85% by weight of a base material containing essentially polyacetal in a mixture with up to 20% by weight of polytetrafluoroethylene to which additive have been admixed; and

said conductive coating on the inner surface of said chamber wall consists of a material containing one or more elements having an atomic number greater than 8.

4,300,051
TRAVELING CATHODE X-RAY SOURCE
Roger G. Little, Bedford, Mass., assignor to Spire Corporation, Bedford, Mass.
Continuation of Ser. No. 920,192, Jun. 29, 1978, abandoned. This application Jan. 21, 1980, Ser. No. 113,811
Int. Cl.³ G03B *41/16*
U.S. Cl. 250—445 T 8 Claims

1. An X-ray apparatus comprising:

(a) means defining a region in which a subject to be irradiated may be positioned;

(b) a closed evacuated chamber surrounding said region;

(c) electron beam generating means within said evacuated chamber, said beam generating means including cathode means mounted for orbital movement within said chamber along a first circular path about said region; and

(d) cooperating anode means fixed in position within said evacuated chamber along a second circular path adjacent to and coaxial with said first circular path, said cathode means and said anode means disposed about a subject positioned in said region, said anode means being constructed to emit X-rays from said evacuated chamber into said region from the point of impingement on said anode means of beamed electrons emitted by said cathode means, the point of emission of said X-rays from said fixed anode means into said region moving along said second circular path as said cathode means moves along said first circular path thereby to irradiate said subject from successively different directions;

(e) said means defining said region and said closed evacuated chamber surrounding said region comprising a housing having an open annulus configuration and defining a toroidal shape vacuum envelope.

4,300,052
APPARATUS FOR EXPOSING A SERIES OF PLATES TO RADIATION
Clive S. Thawley, Dumfries, Scotland; Kenneth Graham, Saint Lukes, England, and Austin Brittain, Dumfries, Scotland, assignors to Uniroyal Limited, Newbridge, Scotland
Filed Feb. 7, 1980, Ser. No. 119,281
Claims priority, application United Kingdom, Feb. 9, 1979, 4706/79
Int. Cl.³ H01J *37/20*
U.S. Cl. 250—453 4 Claims

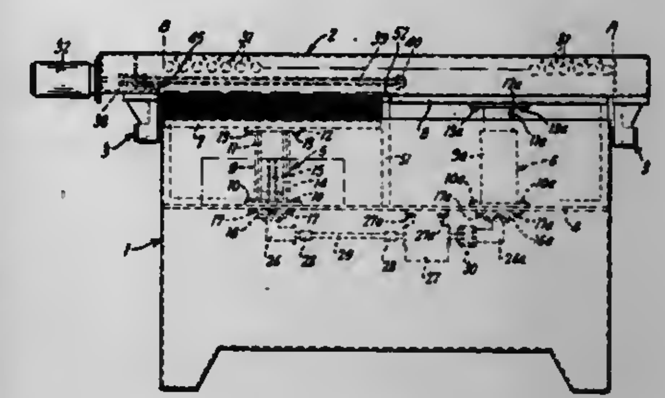

1. Apparatus for exposing a series of plates to radiation, the apparatus comprising a first table having a surface for supporting a stack of plates, a second table located adjacent to the first table and also having a surface for supporting a stack of plates, first drive means comprising a screw jack for raising the first table by a succession of predetermined increments, second drive means comprising a screw jack for lowering the second table by a succession of predetermined increments equal to those by which the first table is raised, radiation exposure means located above at least one of the tables and means for sliding a plate from a location wherein it is supported from the surface of the first table to a location wherein it is supported from the surface of the second table, the screw jacks being of equal pitch and the apparatus including a common prime mover for driving the screw jacks, the drive arrangement being such that the jacks are driven at equal speeds, and the apparatus including control means for controlling the prime mover to operate for a predetermined time during which the jacks drive the tables through the required predetermined increments, the control means including switch means having an operating member pivotally mounted adjacent to the juncture of the two tables and biased to a first limit position projecting into the path of sliding of the plates from the first to the second table, the operating member being pivotable from the first limit position to a second limit position by contact with a plate as the plate commences its sliding movement to actuate the switch means to start operation of the prime mover and, when not restrained by contact with a plate, being pivotable back to the first limit position under the action of the biasing force to actuate the switch means to stop operation of the prime mover.

4,300,053
ROTATABLE MOUNT FOR FILM CASSETTE
William L. Guynes, 208 Ritner St., Carson, Calif. 90746
Filed Oct. 15, 1979, Ser. No. 85,123
Int. Cl.³ G03B *41/16*
U.S. Cl. 250—468 1 Claim

1. In apparatus for supporting an X-ray film cassette and associated grid in a predetermined position in a vertical plane for exposure, said film cassette and grid being oblong, rectangular and coextensive in shape, means forming a pair of upstanding rails supported in spaced, parallel, vertically extending positions, means forming a carriage slideably disposed on said rails for movement between selected vertically spaced locations thereon, holder means connected to said carriage and including lip means constructed and arranged for gripping and supporting said cassette and grid on three sides thereof so that

motion of said grid and cassette is arrested and caused to lie in predetermined vertically oriented planes with respect to each other and in contiguous relation as a unitary structure in coextensive relation to each other, mounting means interconnected between said holder means and said carriage and including a first cylindrical shell extending forwardly from such carriage and towards said holder means to form an axle and a second cylindrical shell forming a hub fixed to and extending rearwardly from said holder means and toward said carriage to form a hub and thereby define an axle-hub pair lying between said carriage and holder means, said cylindrical shells being dimensioned to nest with each other for smooth rotational movement therebetween for supporting said holder means in fixed vertical and horizontal position relative to said carriage, rotatable means interconnecting said carriage and holder means in an axial direction and constructured and arranged for

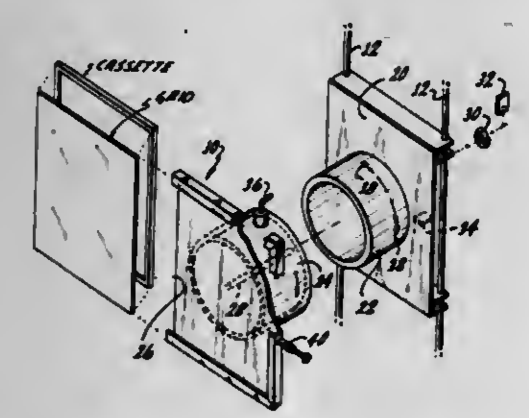

permitting rotational movement between said axial hub pair about a substantially horizontal axis normal to the planes of said cassette and grid while retaining the holder means in otherwise fixed relative position with respect to said carriage thereby allow rotational reorientation of said grid film cassette and holder while said grid and film cassette remain supported as a unitary structure within the holder, stop means interconnected between the carriage and the holder means for limiting the angle of rotation of the cassette holder means to 90° such that the film cassette and grid can be oriented either with their long dimension aligned in a vertical or horizontal direction the opening of said lip means being arranged with said stop means so that it faces either upwardly or horizontally to thereby restrain any movement of said film cassette and grid due to the action of gravity, and index means associated with said hub and axle pair for selectively interlocking the same together at the limits of rotational travel established by said stop means.

4,300,054

DIRECTIONALLY POSITIONABLE NEUTRON BEAM

William E. Dance, Dallas, and Harry M. Bumgardner, Jr., Arlington, both of Tex., assignors to Vought Corporation, Dallas, Tex.

Filed Feb. 4, 1980, Ser. No. 118,150

Int. Cl.³ G02B *5/00*

U.S. Cl. 376—190 **13 Claims**

1. Apparatus for producing a directionally positionable neutron beam comprising:

(a) enclosed container means carried by support means and rotatable about a first axis;

(b) neutron source means supported on said first axis within said enclosed container means by said support means;

(c) moderator fluid substantially surrounding said neutron source and substantially filling said container means; and

(d) collimator means supported by said enclosed container and having an inlet window positioned within said container and an outlet external to said container, said inlet window positioned to traverse at least part of a circle

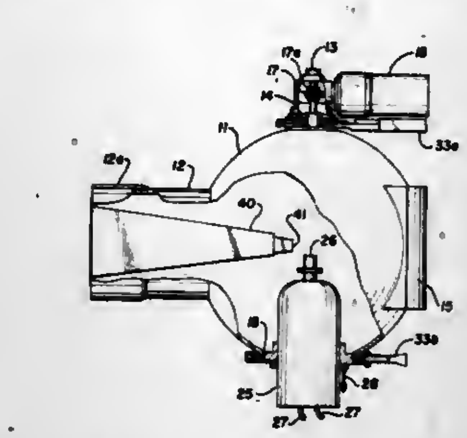

having said first axis as its center as said container is rotated about said first axis.

4,300,055

RADIATION FILTER

Leonhard Taumann, Lafayette, Calif., assignor to Siemens Medical Laboratories, Inc., Walnut Creek, Calif.

Filed May 22, 1980, Ser. No. 152,349

Claims priority, application Fed. Rep. of Germany, Jul. 3, 1979, 2926883

Int. Cl.³ G21K *5/04;* **H01J** *35/02;* **H05H** *7/12*

U.S. Cl. 250—510 **7 Claims**

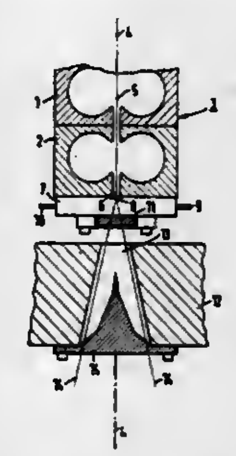

1. X-ray apparatus comprising an electron accelerator including an evacuated acceleration tube, a target exposed to the electron beam, an electron absorber following the target in beam direction, a collimator, and a compensation body made of a material of low atomic number positioned centrally on the axis of symmetry of the masking aperture of the collimator, the improvement comprising a filter plate made of heavy metal and having a high absorption of low energy X-rays and a lower absorption of high energy X-rays, positioned between the electron absorber and the compensation body.

4,300,056

PROCESS FOR MAKING PROTECTIVE BARRIERS AGAINST RADIOACTIVE PRODUCTS

Francis Gagneraud, 6, avenue des Tilleuls, Paris, France 75016

Filed Feb. 26, 1979, Ser. No. 14,963

Claims priority, application France, Aug. 3, 1978, 78 22925

Int. Cl.³ G21F *62/9*

U.S. Cl. 250—517 **10 Claims**

1. A process for shielding radiation emanating from radioactive products to permit storage, handling and shipping without danger, comprising:

placing elements made up of materials selected from the group consisting of molten slag and scorias, coming from a ferrous or nonferrous metal production operation, be-

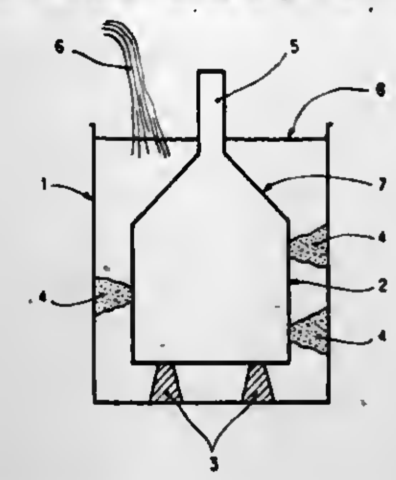

tween the radioactive products and the outside environment to be protected.

4,300,057

ANTI-THEFT APPARATUS FOR VEHICLES

Pedro Batlle Crosas, Gerona, Spain, assignor to Hiperblock, S.A., Gerona, Spain

Filed Jun. 14, 1979, Ser. No. 48,464

Claims priority, application Spain, Jul. 4, 1978, 471.433

Int. Cl.³ B60R *25/08*

U.S. Cl. 307—10 AT **7 Claims**

1. An anti-theft apparatus for use in vehicles, said vehicles being of the type having a brake system which includes a hydraulic return circuit, said apparatus comprising:

valve means located in the hydraulic return circuit of the brake system of a vehicle, said valve means being capable of being switched between two positions respectively for closing off and for opening and allowing fluid flow in one direction through said valve means and through the hydraulic return circuit for respectively locking and unlocking the brakes of the vehicle;

permanent magnet attraction and retention means operatively associated with said valve means for causing said valve means to be closed off and for magnetically holding said valve means in said closed position when and after said permanent magnet attraction and retention means has been activated;

a dual effect coil operatively connected to said permanent magnet attraction and retention means for controlling the operation thereof;

electronic circuit means connected to said dual effect coil for activating said dual effect coil and said electronic circuit means activating said dual effect coil only when specified voltages, making up an electronic code, are transmitted thereto; and

a tamperproof container for housing said valve means, permanent magnet attraction and retention means, dual effect coil, and electronic circuit means;

wherein said valve means comprises an electromagnetic valve having said dual effect coil therein, said electromagnetic valve having a movable core and a seal, said movable core being movable between two positions, a first position away from said seal and second position against said seal, respectively, for opening and closing off brake fluid flow therethrough, wherein the brakes of the vehicle are locked when said core is in said closed position, said dual effect coil having two windings which have opposing polarities and said winding being for causing movement of said movable core between said two positions for locking and unlocking the brakes of the vehicle; and wherein said dual effect coil has a permanent magnet casing for causing said movable core to be held in any one of said two positions; and wherein each of said windings has independent activating means for activating said windings non-simultaneously; and wherein said electronic circuit means includes:

two buttons connected to said dual effect coil, which are simultaneously operated for activating the one of said two windings which cause said movable core to move to said locking position;

a keyboard which is set at predetermined voltages for generating said electronic code; and

an electronic programming device having said voltages making up said electronic code preprogrammed thereinto, said programming device connected between said keyboard and the other of said two windings which cause said movable core to move to said unlocked position for activating the other of said two windings for causing said movable case to move to said unlocked position when said electronic code is generated from said keyboard, and said programming device being housed in said tamperproof housing.

4,300,058

ELECTRONIC SWITCH FOR CONVERTING A PULSE SIGNAL INTO AN ANALOG SIGNAL

Willy Minner, Schwaigern, Fed. Rep. of Germany, assignor to Licentia Patent-Verwaltungs-G.m.b.H., Frankfurt am Main, Fed. Rep. of Germany

Continuation of Ser. No. 742,686, Nov. 17, 1976. This application Apr. 2, 1979, Ser. No. 26,540

Claims priority, application Fed. Rep. of Germany, Nov. 19, 1975, 2551813

Int. Cl.³ H03K *5/00*

U.S. Cl. 307—261 **7 Claims**

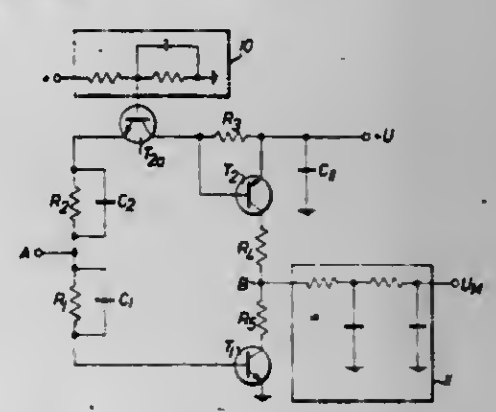

1. An electronic switch for use in a circuit for converting a pulse signal into a continuous analog signal by connecting a d.c. voltage to an integrating circuit under the control of pulses of the pulse signal, said switch comprising a first switching transistor with a first switchable path, a voltage divider connected by one end to said first switchable path, and a second switching transistor of opposite semiconductor type to said first transistor, with a second switchable path connected to the other end of said voltage divider each said path having a temperature-dependent switching characteristic, with said switchable paths and said voltage divider lying between the poles of the d.c. voltage, and wherein said voltage divider includes at least two impedances each connected between a respective switching transistor and a point of said divider intermediate its ends, providing the input for the integrating circuit, with the values of said impedances being selected for giving said divider a divider ratio, with respect to said point intermediate its ends,

for causing the volt-second narrowing of the pulse output on the collector of one said transistor with increasing temperature to be at least partly offset by the corresponding volt-second widening of the pulse output on the collector of the other said transistor at said point intermediate the ends of said divider, thereby to effect compensation of the effects on the analog output signal at the output of the integrating circuit, connected to said voltage divider, of temperature dependence of the switching characteristics of said paths of said first and second switching transistors.

4,300,059
SEQUENTIAL LOGICAL ELECTRONIC CIRCUIT CONTROLLING THE DISCHARGE OF CONTROLLABLE SEMICONDUCTORS
Ramon G. Chavez, Av. Circumvalacion diorote #177, and Rodolfo A. V. Polido, Av. de les Maestros No. 1460, both of Sector Hidalgo Guadalajara, Jal., Mexico
Filed May 4, 1979, Ser. No. 35,845
Claims priority, application Mexico, May 12, 1978, 173499
Int. Cl.³ H03K *17/56, 17/00*
U.S. Cl. 307—261 **4 Claims**

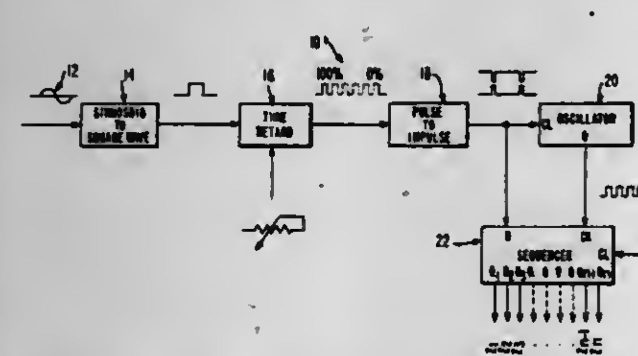

1. A logical electronic circuit for controlling sequentially the discharge of a plurality of controllable semiconductors in multiphase power circuits, comprising:
a circuit for converting a sinusoidal wave alternating signal from one of the power circuits into a square wave alternating signal which has the same frequency as the sinusoidal signal;
a time retarding circuit for producing respective pulses in response to the square waves in the square wave signal wherein the pulses have a frequency equal to the sinusoidal signal and have a selected delay in accordance with a desired phase angle at which conduction is to be initiated in one of the semiconductors during all half-cycles of one polarity in the corresponding power circuit;
a circuit for converting the pulses from the time retarding circuit into impulses;
a free-running logical pulse generator circuit having an operating frequency which is equal to the product of the frequency of the sinusoidal signal multiplied by the number of half-cycles to be controlled during one cycle of the multiphase power circuits;
said free-running logical pulse generator having a synchronizing input connected to the pulse-to-impulse converting circuit so that the free-running logical pulse generator generated trains of pulses between the impulses with first pulses of the trains synchronized relative to the impulses;
a sequential circuit having inputs connected to the free-running logical pulse generator and the pulse-to-impulse converting circuit;
said sequential circuit having a plurality of outputs corresponding to the number of half-cycles to be controlled and being such that the plurality of outputs are sequentially energised by the pulses of the trains of pulses in a sequence synchronized by the impulses; and
coupling circuit means for connecting the outputs of the sequential circuit to control electrodes of the semiconductors.

4,300,060
SIGNAL PROGRAMMABLE MULTIPLE FUNCTION FLIP-FLOP
Ruey J. Yu, Flint, Mich., assignor to General Motors Corporation, Detroit, Mich.
Filed Dec. 10, 1979, Ser. No. 102,249
Int. Cl.³ H03K *3/356, 3/037*
U.S. Cl. 307—272 A **2 Claims**

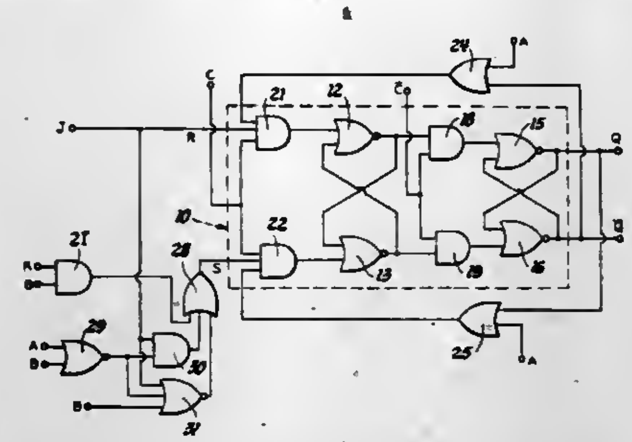

1. A signal programmable, multiple function flip-flop comprising, in combination:
elements comprising a clocked, RS masterslave flip-flop having Q and not-Q outputs and first and second input AND gates, the first AND gate having an R, a clock and another input and the second AND gate having an S, a clock and another input;
elements defining K, A and B inputs;
first gate means responsive to a first signal condition at the A input to connect the Q output to the other input of the second AND gate and the not-Q output to the other input of the first AND gate and further responsive to a second signal condition at the A input to disconnect the same;
second gate means responsive to a second signal condition on the B input to connect the K and S inputs together and further responsive to a first signal condition on the B input to disconnect the same;
third gate means responsive to a first signal condition on the A and B inputs to connect the R and S inputs together and further responsive to any other combination of signal conditions on the A and B inputs to disconnect the same;
inverter means; and
fourth gate means responsive to the first signal condition on the B input and the second signal condition on the A input to connect the R input through the inverter means to the S input and further responsive to any other combination of signal conditions on the A and B inputs to disconnect the same, whereby the flip-flop may be selectively programmed to operate as an RS, JK, D or T flip-flop according to the combination of signal conditions on the A and B inputs.

4,300,061
CMOS VOLTAGE REGULATOR CIRCUIT
Stephen K. Mihalich, and Curtis J. Dicke, both of Santa Clara, Calif., assignors to National Semiconductor Corporation, Santa Clara, Calif.
Filed Mar. 15, 1979, Ser. No. 20,568
Int. Cl.³ G05F *3/08, 3/16;* **H01L** *27/04, 29/78*
U.S. Cl. 307—297 **10 Claims**

1. In a CMOS integrated circuit chip having PMOS and NMOS transistors fabricated on a common physical substrate which contains a first section constructed for high voltage along with a second high device density section constructed for low voltage, said first and second sections having a common substrate electrically connectible to a first power supply terminal and having a common low voltage node, said second section having a high voltage node connectible to a second power supply terminal, a regulator circuit for regulating the

potential at said common low voltage node, said regulator circuit comprising:
means for developing a first voltage equal to the sum of the threshold voltages of a PMOS transistor and an NMOS transistor;

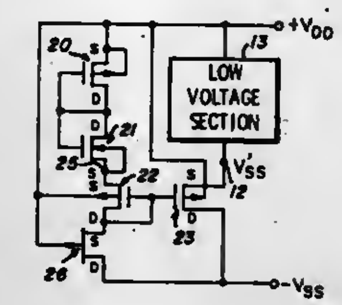

means for subtracting said first voltage from the potential at said first terminal to develop a reference potential equal to common low voltage node potential; and
means for coupling said reference potential to said common low voltage node, said means for coupling including means for stabilizing the potential at said common low voltage node.

4,300,062
OFFSET COMPENSATION CIRCUIT FOR CHARGE-COUPLED DEVICES
Donald E. Marshall, Jr., Harvard, Mass., assignor to Honeywell Inc., Minneapolis, Minn.
Filed Apr. 30, 1979, Ser. No. 34,843
Int. Cl.³ H03K *3/353, 3/42;* **H01L** *29/78, 27/14*
U.S. Cl. 307—304 **7 Claims**

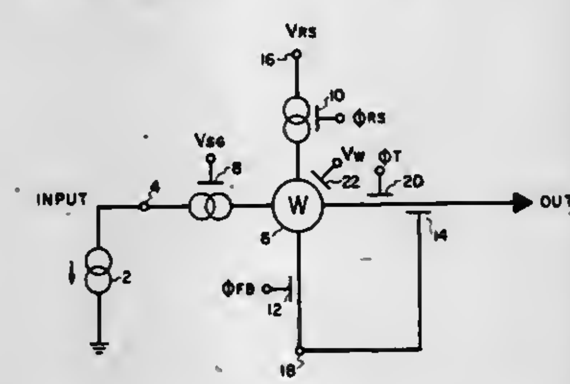

1. A compensating circuit for a radiation sensing circuit comprising
a charge integrating well means for accumulating a charge signal,
a charge output
a first charge threshold gate for connecting said well means to said output, and
feedback means connected between said well means and said charge gate for applying a threshold potential to said first charge gate representative of a preselected charge integrated by said well means, said feedback means including a charge storing diffusion, a second charge gate connecting said diffusion to said well means and circuit means connecting said diffusion to said first charge gate to apply said threshold potential to said first charge gate wherein said well means is responsive to input photons to generate said charge signal.

4,300,063
MULTIPLE INPUT WINDOW DETECTOR
Daniel L. S. Dunphy, and Mark B. Kearney, both of Kokomo, Ind., assignors to General Motors Corporation, Detroit, Mich.
Filed Nov. 26, 1979, Ser. No. 97,351
Int. Cl.³ H03K *5/24*
U.S. Cl. 307—355 **3 Claims**

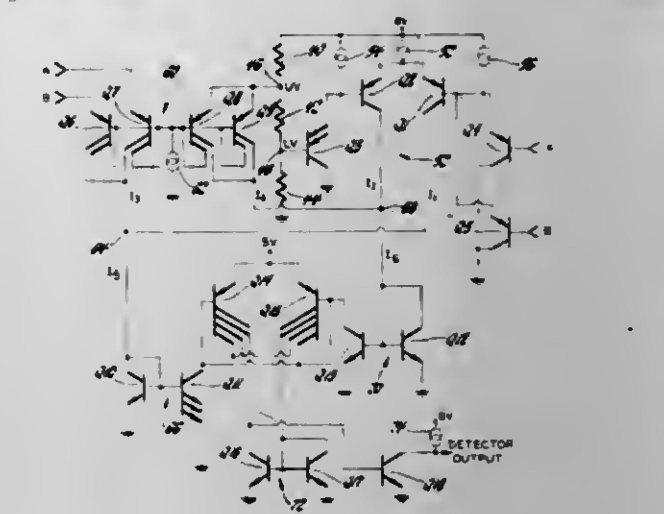

1. A window detector responsive to a plurality of separate inputs comprising:
voltage divider means establishing upper and lower voltage reference levels,
a common emitter differential transconductance stage producing first and second output currents which are differentially related to the difference between said lower voltage reference level and the voltage level of the lowest of said inputs,
a common base differential transconductance stage producing third and fourth output currents which are differentially related to the difference between said upper voltage reference level and the voltage level of the highest of said inputs,
means for summing said first and third output currents and said second and fourth output currents to produce first and second combined output currents,
means responsive to said first and second combined output currents for producing an output voltage at one level if all of said inputs are between said voltage reference levels and a second output if any one of said inputs is greater than said upper voltage reference level or less than said lower voltage reference level.

4,300,064
SCHOTTKY DIODE FET LOGIC INTEGRATED CIRCUIT
Richard C. Eden, Thousand Oaks, Calif., assignor to Rockwell International Corporation, El Segundo, Calif.
Filed Feb. 12, 1979, Ser. No. 11,266
Int. Cl.³ H03K *19/094, 19/017, 19/20*
U.S. Cl. 307—446 **24 Claims**

1. A Schottky diode, field effect transistor logic integrated circuit comprising:
a semiconductor;
at least two Schottky barrier switching diodes on said semiconductor, the cathodes of said diodes being connected to a common conductor, and the anodes of said diodes providing separate logic inputs for the integrated circuit;
a field-effect transistor (FET) on said semiconductor having a grounded source, a drain which provides a logic output for the integrated circuit, and a gate connected to said common conductor;
a bias current means on said semiconductor connected to

said common conductor to provide bias current for said diodes, and gate activation current for said FET; and

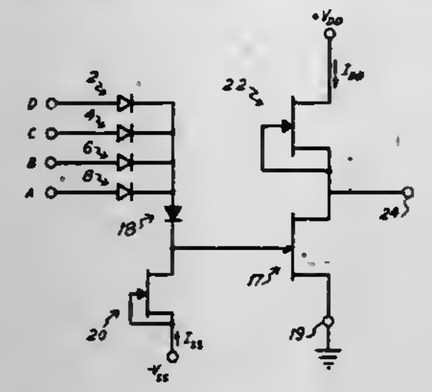

a drain current means on said semiconductor connected to the drain of said FET.

4,300,065
POWER ON RESET CIRCUIT
James J. Remedi, and Alan K. Peterson, both of Austin, Tex., assignors to Motorola, Inc., Schaumburg, Ill.
Filed Jul. 2, 1979, Ser. No. 54,092
Int. Cl.³ H03K *17/687*
U.S. Cl. 307—571 **6 Claims**

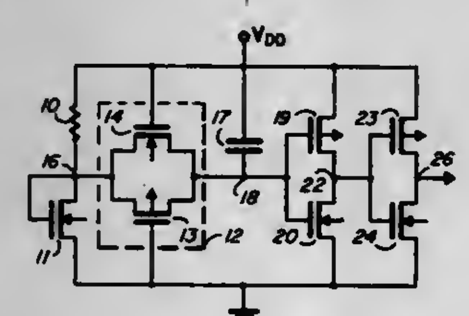

1. A power on reset circuit coupled between a first and a second voltage node, comprising: a resistance means having a first and a second end, the first end being coupled to the first voltage node; a field effect transistor having a gate, a drain, and a source, the gate and drain being coupled to the second end of the resistance means, the source being coupled to the second voltage node; a controllable switch having an input and an output, the input being coupled to the second end of the resistance means; a capacitor coupled between the first voltage node and the output of the controllable switch; a first inverter having an input and an output, the input of the first inverter being coupled to the output of the controllable switch; and a second inverter having an input and an output, the input of the second inverter being coupled to the output of the first inverter wherein the controllable switch is a transmission gate.

4,300,066
LEAKAGE MEASURING APPARATUS FOR A GAS-COOLED, LIQUID-COOLED, DYNAMOELECTRIC MACHINE
John M. Butler, III, Pittsburgh, Pa., assignor to Westinghouse Electric Corp., Pittsburgh, Pa.
Filed Mar. 19, 1979, Ser. No. 21,528
Int. Cl.³ H02K *9/00*
U.S. Cl. 310—53 **2 Claims**

1. In a dynamoelectric machine having a winding, a gas-tight frame surrounding said winding, and coolant means for circulating a liquid coolant within the winding and for maintaining a gas coolant, in thermal communication with the winding, at a pressure greater than that of the liquid coolant, a combination comprising:

(1) a liquid-coolant system including a holding tank for said liquid-coolant, inlet means for supplying liquid coolant to said winding from said holding tank, and discharge means for returning said liquid-coolant to said holding tank; and

(2) a leakage detection apparatus including

(a) an integrating vessel of predetermined volume having an inlet end, an outlet end, and flow restriction means hydraulically disposed at said outlet end, said means establishing a generally continuous flow from said integrating vessel,

(b) a first pressure relief valve hydraulically disposed between said holding tank and said integrating vessel,

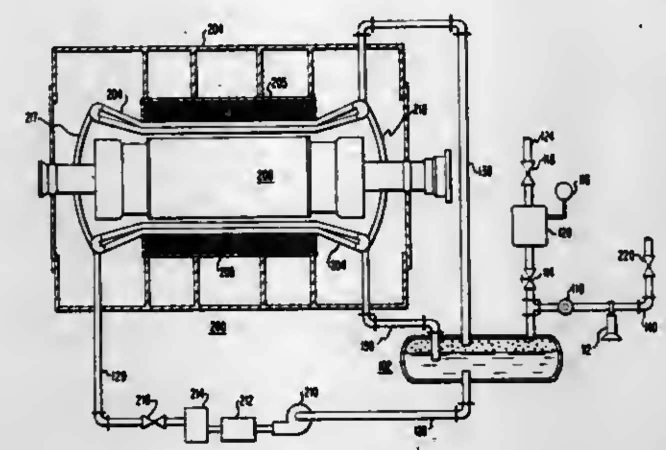

said valve operable to release a predetermined amount of gas from said holding tank to said integrating vessel whenever the pressure in the holding tank exceeds a predetermined level,

(c) a pressure gage for measuring the pressure in the integrating vessel, said pressure indicative of the amount of leakage in the liquid coolant system, and

(d) whereby said leakage detection apparatus acts to integrate the changes in pressure caused by the release of coolant by the first pressure relief valve, and to amplify for gaging purposes the pressure changes in the reservoir.

4,300,067
PERMANENT MAGNET MOTION CONVERSION DEVICE
Albert A. Schumann, 2616 N. 56th St., Milwaukee, Wis. 53210
Filed Mar. 17, 1980, Ser. No. 130,668
Int. Cl.³ H02K *7/06*
U.S. Cl. 310—80 **3 Claims**

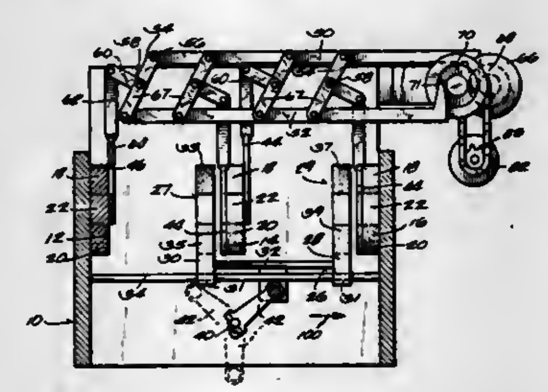

1. In a permanent magnet motor conversion device including spaced stationary permanent magnets, the improvement comprising a carriage, means for supporting the carriage for reciprocating rectilinear movement between said stationary permanent magnets, spaced permanent magnets supported on said carriage, an output shaft, means connecting said carriage to said output shaft, magnetic shields, means for supporting said shields for reciprocating movement in planes generally parallel to the faces of said stationary permanent magnets, and means for moving said plates in a sequence in which said plates are withdrawn from covering the faces of said permanent magnets as the permanent magnets on the carriage move into proximity of said stationary permanent magnets to cause a repulsion of the magnets on said carriage to move the carriage to an opposite position whereby said carriage is shuttled back and forth causing rotation of said output shaft.

4,300,068
ARTICLE CAPABLE OF CREATING A MOIRE EFFECT
Norman F. Baird, 9 Spencer Ct., Morris Plains, N.J. 07950, and Louis J. Parascandola, 31 Merrill Rd., Clifton, N.J. 07012
Filed Oct. 17, 1979, Ser. No. 85,789
Int. Cl.³ H01K *7/06*
U.S. Cl. 313—315 **11 Claims**

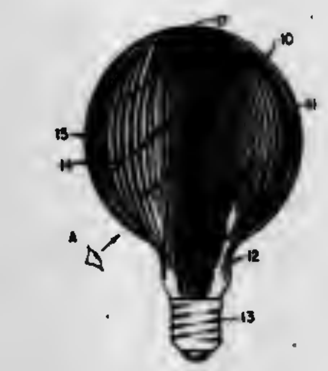

1. An article for creating a moire effect comprising a hollow envelope of an electric lamp having on its surface a plurality of alternating transparent and nontransparent regions arranged in a predetermined pattern such that when viewed from a point external to the object, nontransparent regions on a portion of the envelope surface furthest from the point are discernible through transparent regions on a portion of the envelope surface nearest to the point and through the interior of the envelope, nontransparent regions on the near and far portions of the envelope appearing to intersect at a plurality of intersection points, the apparent intersections defining a family of apparent curves each of which passes through apparent intersections of the nontransparent regions.

4,300,069
COLOR PICTURE TUBE HAVING IMPROVED SLIT TYPE SHADOW MASK AND METHOD OF MAKING SAME
Richard A. Nolan, Lancaster, Pa., assignor to RCA Corporation, New York, N.Y.
Filed Dec. 18, 1979, Ser. No. 104,823
Int. Cl.³ H01J *29/80*
U.S. Cl. 313—403 **8 Claims**

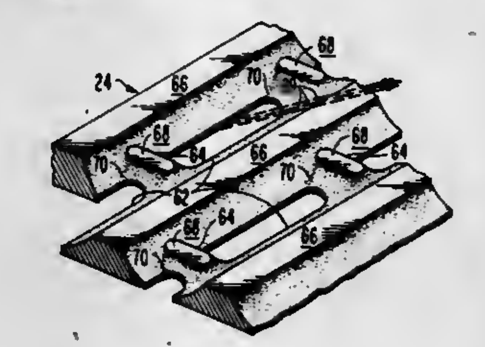

7. In a color picture tube having a slit type apertured mask, wherein the slit apertures are arranged in columns and the apertures in each column are separated by webs, the improvement comprising

each of said webs having substantially equal cross-sectional areas throughout each web.

4,300,070
CATHODE-RAY TUBE SCREEN BORDER IMPROVEMENT
Richard H. Godfrey, and James O. Peck, both of Lancaster, Pa., assignors to RCA Corporation, New York, N.Y.
Continuation-in-part of Ser. No. 965,240, Nov. 30, 1978, abandoned. This application Jun. 11, 1979, Ser. No. 47,218
Int. Cl.³ H01J *29/07, 29/18*
U.S. Cl. 313—403 **5 Claims**

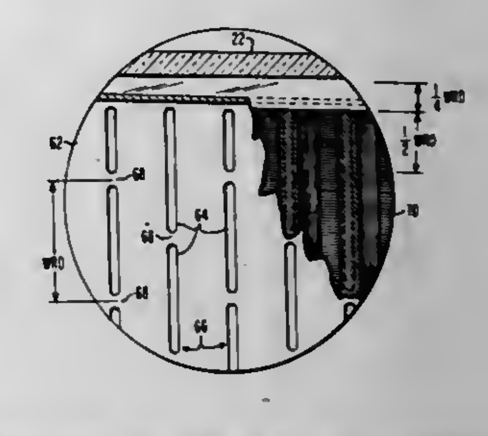

2. In a cathode-ray tube having a cathodoluminescent line screen and a slit apertured mask mounted within said tube in spaced relation to said screen, wherein the slits in said mask are aligned in substantially parallel columns, each column containing a plurality of slits which are separated by web portions of said mask, and the web portions in adjacent columns being staggered relative to each other in the longitudinal direction of the columns, the improvement comprising

each slit aperture at the end of a column being at least half the length of a central slit aperture and the ends of all columns being aligned along smoothly contoured borderlines.

4,300,071
FOUR-CORNER SHADOW MASK SUSPENSION SYSTEM FOR TELEVISION CATHODE RAY TUBES
Lawrence W. Dougherty, Sleepy Hollow, and Kazimir Palac, Carpentersville, both of Ill., assignors to Zenith Radio Corporation, Glenview, Ill.
Filed Dec. 10, 1979, Ser. No. 101,959
Int. Cl.³ H01J *29/80*
U.S. Cl. 313—407 **7 Claims**

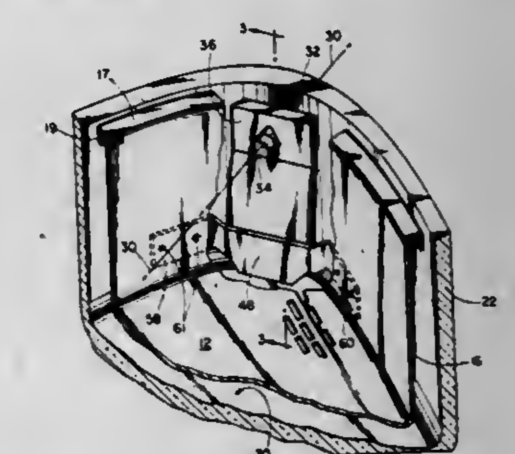

1. An improved low-cost mask-faceplate assembly for a shadow-mask-type color cathode ray tube, comprising:

a glass faceplate having a dished central section and a rearwardly extending flange;

a substantially rectangular, frameless shadow mask having a dished perforate central section and a rearwardly extending skirt, said mask being relatively stiff about its major and minor axes, but torsionally flexible and unstable with respect to its diagonals, said mask having an integral rim extending radially outwardly from the edge of said mask skirt to serve

as an electron beam shield and to provide added stiffness for said mask; and
a corner mask suspension system for rigidly and stably suspending said mask with said dished perforate central section of said mask spaced from said central section of said faceplate, said suspension system consisting of four suspension devices, one at each corner of the mask, each device comprising:
a stud affixed to said faceplate flange on the associated faceplate diagonal and arranged to extend radially inwardly along said diagonal;
a leaf spring for detachably interconnecting said mask corner to said stud on said faceplate flange;
means for mounting said spring on said mask diagonal and normal to said diagonal such that said spring extends rearwardly away from said central section of said faceplate, from a terminal point at or forwardly of said dished central section of said mask such that when said spring is deflected, the distal end thereof travels on an arc inwardly toward the faceplate central axis, whereby the mask, which is low in cost but inherently lacking in self-rigidity and stability due to its one-piece frameless construction, is suspended with high rigidity derived from said faceplate and with high stability derived from the four-corner diagonal mounting, said rearwardly extending springs having their distal ends readily accessible for facile insertion and removal of said mask from said faceplate.

4,300,072
MAGNETRON HAVING AN INTERNAL CAPACITOR FOR SUPPRESSING LEAKAGE OF HIGH FREQUENCY
Norio Tashiro, Yokohama, Japan, assignor to Tokyo Shibaura Denki Kabushiki Kaisha, Kawasaki, Japan
Filed Jan. 28, 1980, Ser. No. 116,592
Claims priority, application Japan, Feb. 1, 1979, 54-10806
Int. Cl.³ H01J *25/50*
U.S. Cl. 315—39.51 **11 Claims**

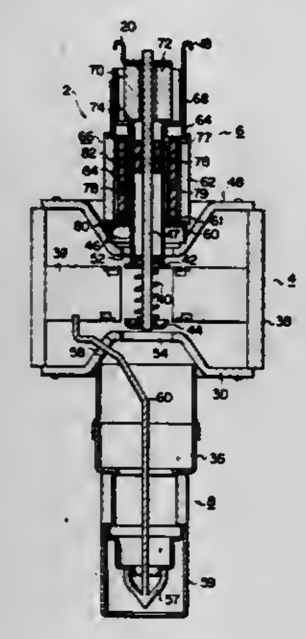

1. A magnetron comprising;
an anode cylinder having a number of resonance cavities defined in the anode cylinder,
a cathode disposed along the axis of said anode cylinder,
a cover means hermetically sealing said anode cylinder,
a cathode holding means for supporting said cathode protruding from said cover means, the cathode holding means being disposed along the axis of said anode cylinder,
a cylindrical envelope coaxial with said anode cylinder and hermetically sealing said cathode holding means,
a cylindrical member made of a dielectric material and coaxially disposed within said envelope,
an inner electrical conductive layer extending along the inner surface of said cylindrical member from one end thereof, and
an outer electrical conductive layer extending along the outer surface of said cylindrical member from the other end thereof, one of said conductive layers being electrically connected to said anode, the other conductive layer being electrically connected to said cathode.
6. A magnetron comprising;
an anode cylinder having a number of resonance cavities defined in the anode cylinder,
a cathode disposed along the axis of said anode cylinder,
a cover means hermetically sealing said anode cylinder,
a cathode holding means for supporting said cathode protruding from said cover means, the cathode holding means disposed along the axis of said anode cylinder,
a cylindrical envelope coaxial with said anode cylinder and hermetically sealing said cathode holding means, said cylindrical envelope including a cylindrical member made of a dielectric material,
an inner electrical conductive layer extending along the inner surface of said cylindrical member from one end thereof, and
an outer electrical conductive layer extending along the outer surface of said cylindrical member from the other end thereof, one of said electrical conductive layer being electrically connected to said anode, the outer layer being electrically connected to said cathode.

4,300,073
SCREW-IN TYPE LIGHTING UNIT HAVING A CONVOLUTED TRIDIMENSIONAL FLUORESCENT LAMP
Henry Skwirut, Verona; Robert G. Young, Nutley, and Edward W. Morton, Teaneck, all of N.J., assignors to Westinghouse Electric Corp., Pittsburgh, Pa.
Filed Feb. 13, 1979, Ser. No. 11,832
Int. Cl.³ H01J *17/34, 61/56, 17/28*
U.S. Cl. 315—53 **30 Claims**

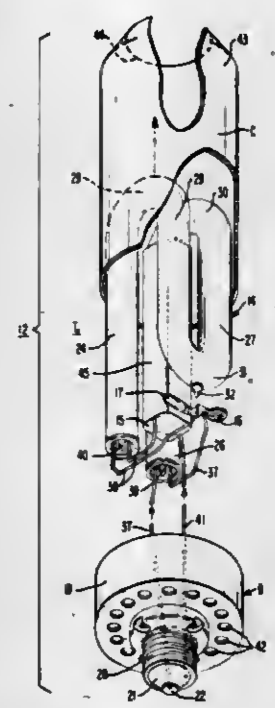

1. An electric lamp unit adapted for use in lighting apparatus that requires a compact light source and includes socket means, said lamp unit comprising, in combination;
an electric discharge lamp comprising a sealed tubular envelope of light-transmitting vitreous material and convosingle-ended construction and of such physical size that it is suitable for use in said lighting apparatus and the socket means thereof.

4,300,074
VIDEO COUPLING SYSTEM
Paul A. Diddens, Denver, and Robert E. Humphrey, Englewood, both of Colo., assignors to Honeywell Inc., Minneapolis, Minn.
Filed Apr. 13, 1979, Ser. No. 30,076
Int. Cl.³ H01J *29/70, 29/76*
U.S. Cl. 315—401 **6 Claims**

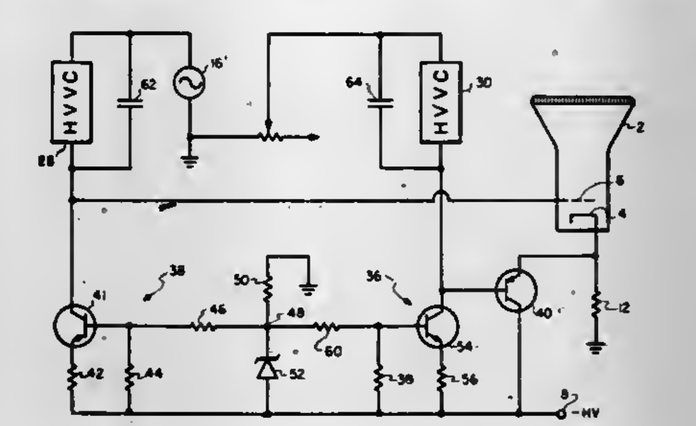

1. A coupling system for coupling a ground referenced control signal to a high voltage energized cathode ray tube, said system comprising:
a ground referenced control signal source means,
a cathode ray tube having a cathode and a control grid,
a high voltage biasing means connected to bias said cathode and control grid to a high negative potential,
coupling circuit means connected between said signal source means and said cathode ray tube for coupling said control signal to said control grid of said cathode ray tube,
said coupling circuit means comprising a plurality of solid state constant voltage elements connected to provide voltage buffering between said high voltage biasing means and said ground referenced source means,
said coupling circuit means including first solid state elements having a positive temperature coefficient of voltage change and second solid state elements having a negative temperature coefficient of voltage change, said elements being combined in said coupling circuit means to compensate each other and to produce a net temperature coefficient of voltage change which approaches zero.

4,300,075
AC REGULATOR SYSTEM FOR QUARTZ IODINE LAMPS
Ralph G. Foose, Aurora, and John D. Crabtree, Cuyahoga Falls, both of Ohio, assignors to The Nuarc Company, Inc., Chicago, Ill.
Filed Apr. 10, 1980, Ser. No. 138,922
Int. Cl.³ H05B *39/08*
U.S. Cl. 315—307 **14 Claims**

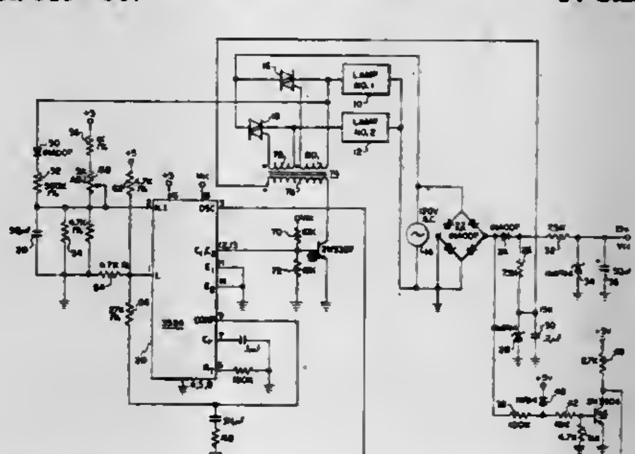

1. An alternating current line voltage regulation system comprising, a source of AC line voltage having a nominal value and subject to fluctuations in amplitude of substantial magnitude, a quartz iodine lamp capable of providing a rated power output at a reduced voltage substantially below said nominal value of said AC source, semiconductor switching means, means connecting said lamp and said switching means directly in series across said AC source, means for developing a control signal proportional to the average voltage across said lamp, and means controlled by said control voltage for varying the firing point of said semiconductor switching means relative to a predetermined reference voltage point so that the average voltage across said lamp is maintained substantially constant despite said line voltage fluctuations, said reference voltage point being selected so that a non-sinusoidal voltage having an average value equal to said reduced lamp voltage is applied to said lamp when said alternating current source has said nominal value.

4,300,076
RASTER-CENTERING CIRCUIT FOR MULTIPLE RASTER CRT SYSTEMS
Joseph F. Yello, Wooddale, Ill., assignor to Zenith Radio Corporation, Glenview, Ill.
Filed Feb. 22, 1980, Ser. No. 123,545
Int. Cl.³ H01J *29/54*
U.S. Cl. 315—398 **7 Claims**

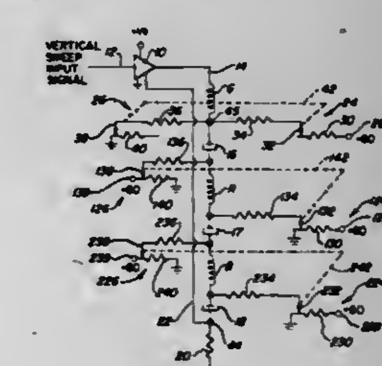

1. A cathode ray tube raster-generating and centering circuit of the type having at least two deflection coils capacitively coupled in series with each other; said circuit comprising:
one or more means for (a) driving a varying current through said series-connected deflection coils for generating said rasters and (b) driving two constant currents through one of said deflection coils in opposite directions so that the net constant current in said one deflection coil depends on the relative magnitudes of said two constant currents;
means for adjusting said two constant currents in inverse relation to each other, so that the resulting adjustments of said two constant currents are additive in their effects on said net constant current;
means for driving another two constant currents through another of said deflection coils in opposite directions so that the net constant current in said other deflection coil depends on the relative magnitudes of said other two constant currents;
and means for adjusting said other two constant currents in inverse relation to each other, so that the resulting adjustments of said other two constant currents are additive in their effects on said net constant current in said other deflection coil;
said two adjusting means both being arranged so that the ranges of adjustment of their respective net constant currents both extend to both sides of zero, whereby both of said rasters may be shifted in either of two opposite directions for centering purposes.

4,300,077

TRANS-SYNCHRONOUS MOTOR APPARATUS AND METHOD

Leonhard Katz, Winchester, and Lawrence A. Ormord, Lynn, both of Mass., assignors to Astro Dynamics, Inc., Woburn, Mass.

Filed Dec. 17, 1979, Ser. No. 104,184

Int. Cl.³ H02P *7/36*; H02M *5/22*

U.S. Cl. 318—812 **14 Claims**

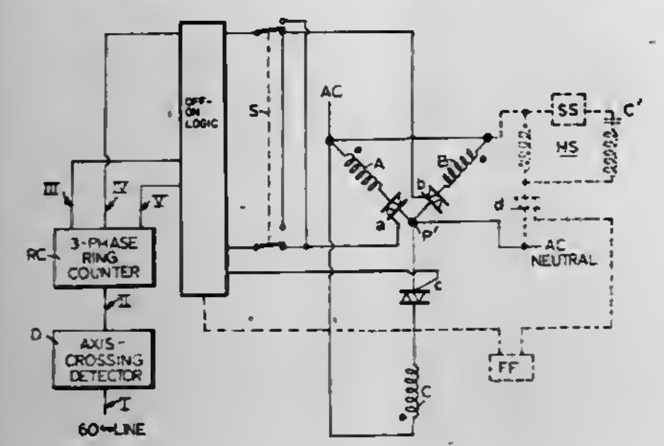

8. Trans-synchronous motor apparatus for generating speeds in revolutions per minute that are a fraction (1/n) of 120 f/P, where f is the line frequency in cycles per second and P is an even number of magnetic poles, said apparatus having, in combination, three geometrically spaced and connected magnetic-pole windings, each having a switch for controlling the energizing of the corresponding winding from a power source; means for producing pulses corresponding to the zero axis crossing of the power; means responsive to the pulse-producing means for selecting for each of said windings a full half cycle of the power energy every n half cycles, wherein n corresponds to the denominator of the desired fraction of 120 f/P, with the selected half cycles for each winding being symmetrically time-staggered with respect to those of the other windings; and means responsive to the selecting means for controlling the winding switches to energize each winding at different times from other windings during corresponding selected half cycles to produce an effective excitation field that generates a motor speed of said fraction of 120 f/P.

4,300,078

METHOD OF CONSTRUCTING MODELS OF ROTARY ELECTRICAL MACHINES TO PROVIDE SIMULTANEOUS SIMILITUDE OF ELECTROMAGNETIC, THERMAL AND MECHANICAL WORKING CONDITIONS OF THE ROTOR

Jean-Pierre Pascal, Paris, France, assignor to Institut de Recherche des Transports, France

Filed Nov. 14, 1978, Ser. No. 960,519

Claims priority, application France, Nov. 15, 1977, 77 34305

Int. Cl.³ H02K *15/00*

U.S. Cl. 318—49 **4 Claims**

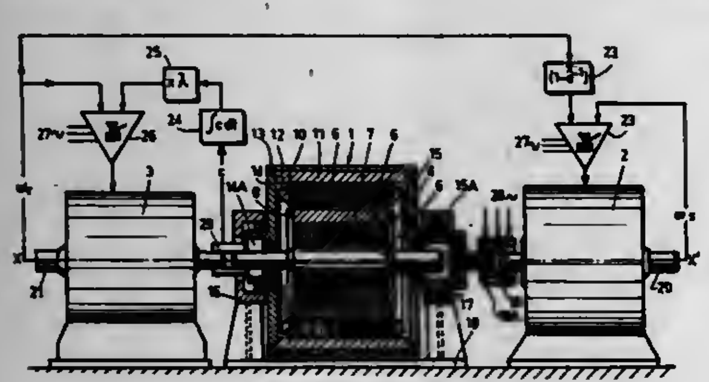

1. Method of producing the electromagnetic, thermal, and mechanical phenomena of the stress field of the rotor of a rotary electrical machine on a reduced scale model of that machine comprising the steps of

building a reduced scale model of the rotor to be tested along with a reduced scale model of the stator,

modifying the stator while building it to provide a correct evolution of rotor frequencies by compensation in the stator for reduction of electromagnetic and inertial forces in the rotor,

connecting the motor consisting of said model rotor and stator under test to a rotary machine,

obtaining a speed pick-up from said rotary machine and using said speed pick-up to control rotation frequency of said rotary machine,

the stator being made to rotate in reverse direction to the rotor and proportionally so as to operate, at any moment, in accordance with the relationship:

$$V_s = V_r(1 - e^{-1})$$

in which:

V_s is the stator speed;

V_r is the rotor speed; and

e is the geometrical scale of reduction.

4,300,079

DC MOTOR CONTROL SYSTEM

Shigeki Kawada; Yoshiki Fujioka; Naoto Ohta, all of Hino, and Yasuo Takahasi, Tokyo, all of Japan, assignors to Fujitsu Fanuc Limited, Japan

Filed Apr. 23, 1979, Ser. No. 32,672

Claims priority, application Japan, Apr. 26, 1978, 53-49414

Int. Cl.³ H02P *5/16*

U.S. Cl. 318—390 **8 Claims**

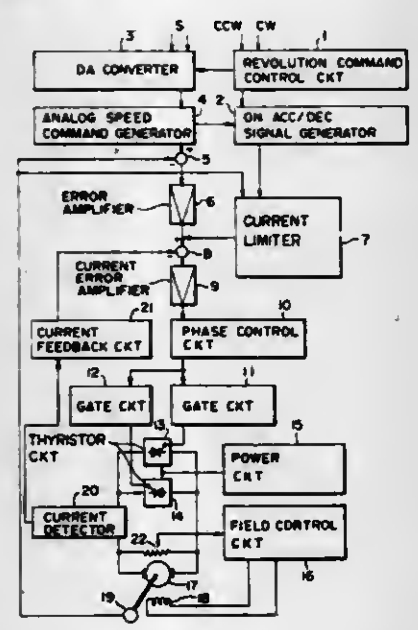

1. A DC motor control system, for providing a DC motor with a constant output characteristic, said DC motor having an armature and a tachometer for providing a speed feedback voltage signal, said system comprising:

command means for providing an analog speed command signal;

means for comparing said speed feedback voltage signal with said analog speed command signal and for generating a speed error signal for controlling the revolving speed of the DC motor;

first means, operatively connected to said command means, for detecting the rise and fall of said analog speed command signal and for generating an ON ACCELERATION/DECELERATION signa;

second means, connected to said first means, for providing the ON ACCELERATION/DECELERATION signal in accordance with the output of said first means and for generating a current limit signal when the DC motor is switched from an acceleration state to a stationary state; and

third means, operatively connected to said second means and to the armature, for applying a drive current for producing a rated output to the armature of the DC motor when said second means provides the ON ACCELERATION/DECELERATION signal, and for applying a current for producing an output 1/n times the rated output to the armature of the DC motor when said second means generates the current limit signal, regardless of the magnitude of its load, to reduce the output of the DC motor, thereby providing the DC motor with an enlarged constant output range.

4,300,080

POWER DRIVER CONTROL CIRCUIT FOR SERVO ACTUATOR

Patrick S. Lee, Campbell, Calif., assignor to Sperry Corporation, New York, N.Y.

Filed Oct. 22, 1979, Ser. No. 86,926

Int. Cl.³ G05B *9/02*

U.S. Cl. 318—563 **30 Claims**

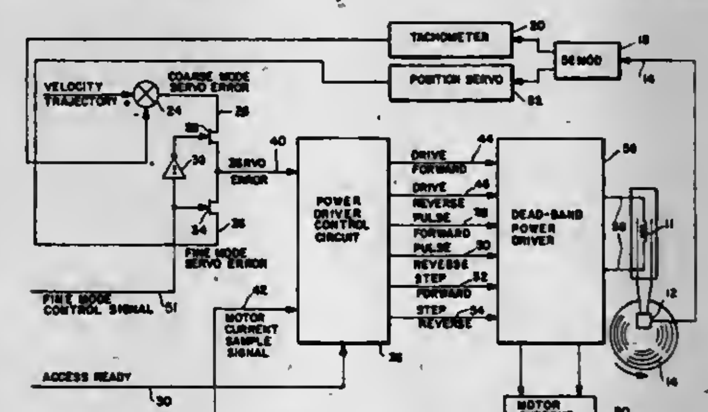

1. A power driver for use in a servo system comprising,

an electromagnetic actuator (EMA) of the type applying force to a movable member by means of forward and reverse current supplied to the EMA corresponding to forward and reverse servo errors,

switching means for applying greater amounts of forward and reverse current to an EMA curing coarse servo corrections and lesser amounts during fine servo corrections, and

control circuit means, having an output connected to said switching means and connected to receive a servo error signal as one input and an actuator current sample signal as another input, the two inputs electrically combined for temporarily isolating said switching means from the EMA upon transitions in polarity of the servo error signal by opening said switching means for a selected dead zone time interval, thereby preventing switching means burn-out.

4,300,081

MOTOR VOLTAGE FEEDBACK FOR A SERVO MOTOR CONTROL SYSTEM

Kenneth E. Van Landingham, Ortonville, Mich., assignor to General Motors Corporation, Detroit, Mich.

Filed Mar. 14, 1980, Ser. No. 130,542

Int. Cl.³ G05B *11/28*

U.S. Cl. 318—599 **2 Claims**

1. A feedback control system for controlling the output shaft of a servo motor, comprising:

means for generating an error signal as a function of the difference between a desired shaft position and the actual shaft position;

means connected to said motor for developing a feedback signal as a function of the average terminal voltage of said motor;

means for combining said error signal with said feedback signal for decreasing the magnitude of said error signal and for forming control pulses therefrom to define energization periods for said motor;

motor control means including an energization circuit path effective during said energization periods to connect said motor to a source of direct voltage, and a discharge circuit path effective during an inductive discharge period following an energization period to clamp the reverse inductive voltage of said motor at substantially that applied to said motor during said energization period, the relation-

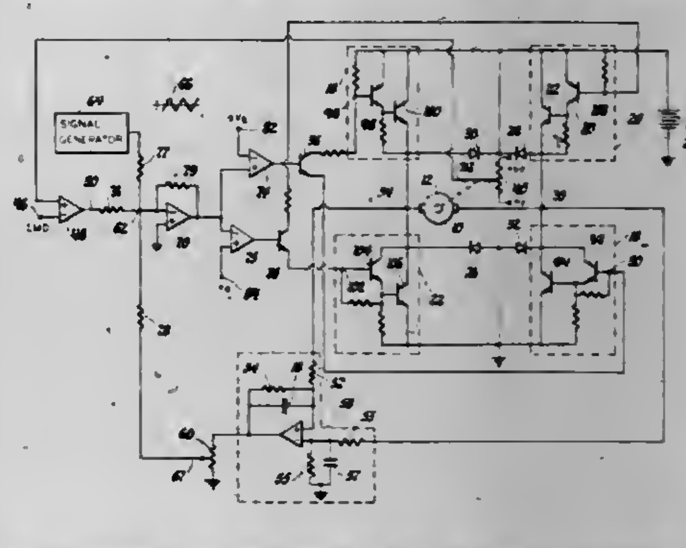

ship among (1) the energization and discharge circuit path time constants, (2) the duration of said energization period, (3) the repetition frequency of said control pulses, and (4) the L/R time constant of said motor being such that each of said discharge periods is substantially equal in duration to an associated energization period and that a counter EMF voltage is developed in said motor during a time period between the termination of said discharge period and the beginning of a subsequent energization period whereby the continuous average motor voltage corresponds substantially to the back-EMF of said motor and the response of said control system is stabilized in accordance with the velocity of said motor output shaft.

4,300,082

SPEED-REGULATED POSITIONING DRIVE

Wolfgang Angersbach, Darmstadt, and Karl-Heinz Meier, Zeilhard, both of Fed. Rep. of Germany, assignors to Quick-Rotan Becker & Notz KG, Darmstadt, Fed. Rep. of Germany

Continuation of Ser. No. 861,636, Dec. 19, 1977, Pat. No. 4,228,385. This application Jan. 10, 1980, Ser. No. 110,849

Claims priority, application Fed. Rep. of Germany, Dec. 20, 1976, 2657658

Int. Cl.³ G05B *5/01*

U.S. Cl. 318—614 **4 Claims**

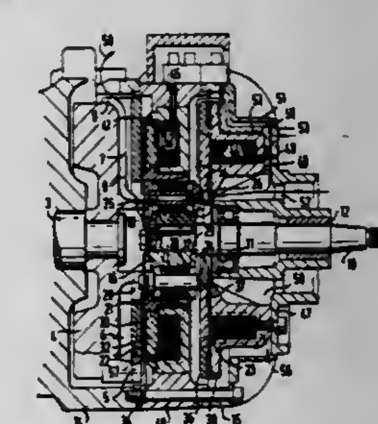

1. A speed-regulated positioning drive, comprising:

a rotatable drive member which may be driven by a motor;

an output shaft rotatable about an axis of rotation;
an electromagnetic clutch having a first movable element which can be moved between a first position in which the drive member and the output shaft are mechanically coupled and a second position in which the drive member and the output shaft are mechanically uncoupled;
an electromagnetic brake having a second movable element which can be moved between a first position in which the output shaft is braked and a second position in which the output shaft is unbraked;
an electronic control connected to the brake and the clutch and coordinating operation thereof in a manner that the output shaft can be caused to rotate at a constant speed and further in a manner that the output shaft can also be arrested at a desired position;
a guide body fixed on the output shaft and rotating therewith, the guide body having an even number of like bores at least equal to two, the bores extending parallel to the axis of rotation of the output shaft; and
at least two elongated connectors, all connectors and all bores in the guide body being in one-to-one correspondence with each other, with each connecter being slidably located within a corresponding bore and all connectors being divided into two like groups, of which one group is fixed to the first movable element and another group is fixed to the second movable element, the connectors mounting the first and second movable elements about the shaft in a manner that said elements are independently movable between their first and second positions parallel to the axis of rotation of the shaft while being rotationally fixed with respect thereto.

4,300,083

CONSTANT AMPLITUDE CONTROLLER AND METHOD

Robert W. Heiges, Erie, Pa., assignor to Automation Devices, Inc., Fairview, Pa.

Continuation-in-part of Ser. No. 813,081, Jul. 5, 1977, abandoned. This application Mar. 19, 1979, Ser. No. 21,503

Int. Cl.^{3} G05B *11/00*

U.S. Cl. 318—686 **32 Claims**

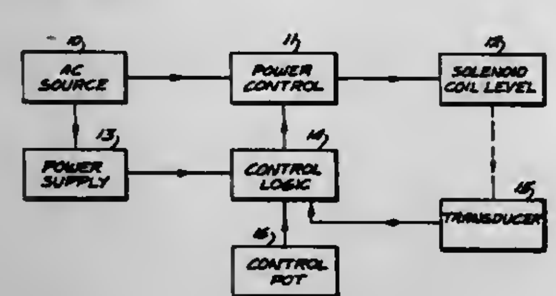

1. In combination, a vibrating apparatus including solenoid means for inducing a vibration mode to the vibratory apparatus and a constant amplitude controller for supplying voltage from an A.C. source to the solenoid means to operate the same to induce the vibration mode of a desired amplitude to the vibratory apparatus, said constant amplitude controller comprising:
power control means for regulating the voltage to said solenoid means in response to a control signal;
said power control means having two power terminals and a control signal receiving terminal, said power terminals being connected in series between said A-C source and said solenoid means,
transducer means mechanically coupled to said vibratory apparatus for providing a transducer signal representatively proportioned to reflect the actual amplitude of said vibratory apparatus,
operator input means for transulating the desired amplitude of said vibratory apparatus to a reference signal,
control logic means including error detector means and a summing means,
said error detector means electrically connected to the output of said operator input means for receiving said reference signal and to the output of said transducer means for receiving said transducer signal,
said error detector means operative to provide an error-correct signal varying with the difference between said reference signal and said transducer signal,
said summing amplifier electrically coupled to the output of said operator input means to receive said reference signal and electrically coupled to said error detector means for receiving said error-correct signal,
said summing amplifier operative to sum said reference signal and said error-correct signal to produce as an output said control signal,
said power control means electrically coupled to said control logic means for receiving said control signal,
power supply means for providing D.C. voltage to power said control logic means,
whereby a feedback control system for said vibratory apparatus provides regulation to adjust the actual amplitude level to the desired amplitude level.

4,300,084

SHIFT REGISTER SUITABLE FOR CONTROLLING THE ENERGIZATION OF A MULTIWINDING MOTOR

Richard H. Heeren, Palatine, Ill., assignor to Teletype Corporation, Skokie, Ill.

Division of Ser. No. 783,586, Apr. 1, 1977, Pat. No. 4,221,001. This application Feb. 22, 1980, Ser. No. 123,630

Int. Cl.^{3} G05B *19/40*

U.S. Cl. 318—696 **8 Claims**

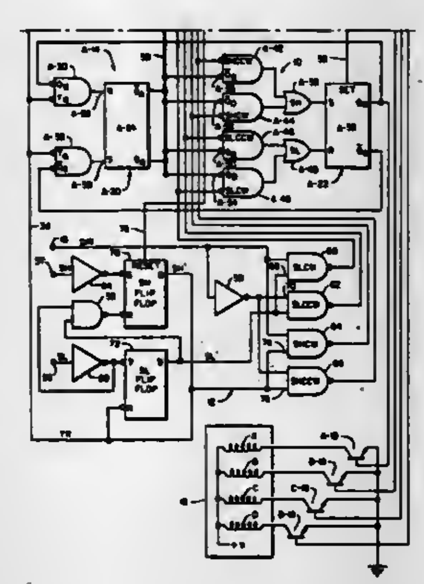

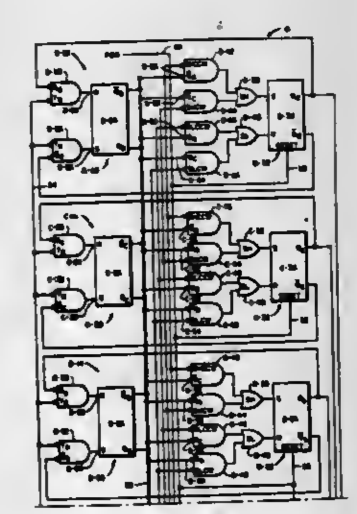

1. An apparatus for selectively controlling the energization of the windings of a multiwinding motor comprising:

a recirculating shift register having at least three stages, each of the stages having first and second stable states with each of the stages controlling the energization of one of the windings of the motor,
means for placing at least one of said shift register stages in said first state which corresponds to energization of its associated motor winding and at least one other of the shift register stages in the second state which corresponds to de-energization of its associated motor winding;
means for alternately applying first and second control signals to said shift register;
first means, responsive to said first control signal, for placing any stage adjacent in a first direction to a stage in a first state in said first state so that two adjacent stages will be in their first state, thus, simultaneously energizing at least two motor windings; and
second means responsive to said second control signal for placing any stage adjacent in a first direction to a stage in a second state in said second state so that two adjacent stages will be in their second state and thus at least one less motor winding is energized by the shift register in response to said second signal.

4,300,085

FAILURE DETECTION METHOD AND CIRCUIT FOR STEPPING MOTORS

Hisayoshi Monma, and Shigenobu Katagiri, both of Katsuta, Japan, assignors to Hitachi Koki Company, Limited, Tokyo, Japan

Filed May 28, 1980, Ser. No. 154,049

Claims priority, application Japan, Jul. 18, 1979, 54-91795; Jul. 18, 1979, 54-91796

Int. Cl.^{3} G05B *19/40*

U.S. Cl. 318—696 **5 Claims**

1. A method for detecting a failure in a stepping motor having a rotor and a plurality of stator coils which are connected in series with respective switching means, means for activating a particular switching means to energize the associated stator coil for holding said rotor in a predetermined angular position, and means for detecting whether said switching means are rendered conductive or nonconductive, said method comprising, after activation of said particular switching means, activating another switching means with a current insufficient to cause said rotor to be set in rotation and causing said detecting means to detect the conduction or nonconduction of said another switching means.

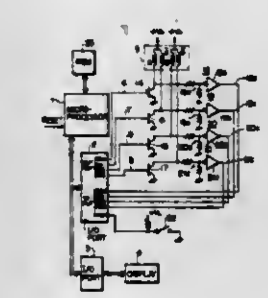

4,300,086

CONTROL CIRCUIT FOR A.C. INDUCTION MOTOR

Michael R. Cesarz, Mequon, and Richard E. Stobbe, Greenfield, both of Wis., assignors to Kearney & Trecker Corporation, West Allis, Wis.

Filed Mar. 28, 1979, Ser. No. 24,561

Int. Cl.^{3} H02P *5/16*

U.S. Cl. 318—801 **7 Claims**

1. A motor control circuit for energizing an A.C. induction motor and for controlling the speed thereof, said A.C. induction motor having a rotor and having a plurality of stator windings, said motor control circuit comprising:
a D.C. voltage source;
an inverter which is operable to convert a D.C. input voltage into an A.C. output voltage, the input of said inverter being coupled to said D.C. voltage source and the output of said inverter being coupled to said stator windings;
means for varying the output frequency of said inverter;
current sensing means for sensing the magnitude of current flowing in said stator windings; and

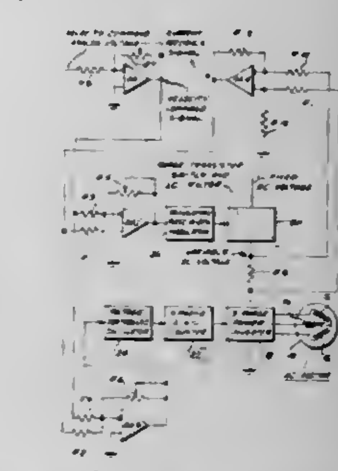

means coupled to said current sensing means and to said means for varying the output frequency of said inverter for increasing the frequency of said inverter when the magnitude of stator current rises above the magnitude of stator current drawn by said motor during no-load conditions and for decreasing the frequency of said inverter when the magnitude of stator current falls from a magnitude greater than the magnitude of stator current drawn by said motor during no-load conditions until the stator current magnitude equals the stator current magnitude at no-load motor conditions to hold the rotary speed of said rotor substantially constant in spite of variations in the load driven thereby.

4,300,087

PORTABLE, RECHARGEABLE POWER SUPPLY

Alfred Meisner, Nuremburg, Fed. Rep. of Germany, assignor to Diehl GmbH & Co., Nuremburg, Fed. Rep. of Germany

Filed Jul. 27, 1979, Ser. No. 61,179

Claims priority, application Fed. Rep. of Germany, Aug. 12, 1978, 7824114

Int. Cl.^{3} H02J *7/00;* **H01M** *10/46*

U.S. Cl. 320—2 **2 Claims**

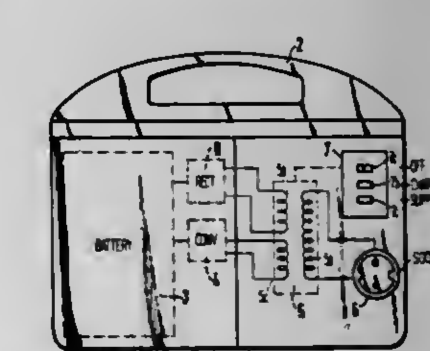

1. A portable, rechargeable power supply, comprising:
a portable casing;
a rechargeable battery located within said casing;
a voltage converter for converting a D.C. output voltage from said battery into an A.C. voltage;
a rectifier circuit for converting an A.C. input voltage into a D.C. voltage and supplying the D.C. voltage to said battery;

a transformer having a first winding connected to said voltage converter, a second winding connected to said rectifier circuit, and a third winding operatively associated with each of said first and second windings;
an input/output socket connected to said third winding; and
switching means including a first switch for enabling said first and third windings of said transformer to supply an A.C. voltage from said voltage converter to said socket, and a second switch for enabling said second and third windings of said transformer to supply an A.C. voltage from said socket to said rectifier circuit to recharge said battery.

4,300,088
ELECTRIC CHARGING APPARATUS FOR GROUND VEHICLES
David E. Hicks, 5255 Bluestem Dr., Colorado Springs, Colo. 80917
Filed Apr. 13, 1979, Ser. No. 29,683
Int. Cl.³ B60L *7/10;* **H02J** *7/00*
U.S. Cl. 320—61 **2 Claims**

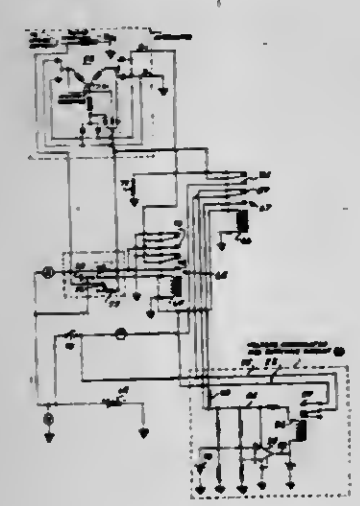

1. An electrical generating system for land vehicles comprising:
generator means including first and second relatively rotatable electromagnetic windings;
electrical power storage means;
a vehicle drive train including operatively interconnected land contacting wheels and prime mover means;
means interconnecting the prime mover means and the first of said windings to produce rotation of said winding;
a manually operated lever means for producing braking action to the vehicle;
output control means electrically operative to control the output of the generator means, including means interconnecting the lever means and the output control means whereby the electrical output of the generator means increases with increased braking action; and
means interconnecting the power storage means and the generator means.

4,300,089
DEVICE FOR STARTING AC LOAD USING AC GENERATOR AS POWER SOURCE
Takao Kawabe, and Yoshiyuki Kawabe, both of 41-5, Higashiogu 2-chome, Arakawa-ku, Tokyo, Japan 116
Filed Dec. 20, 1979, Ser. No. 105,853
Claims priority, application Japan, Dec. 27, 1978, 53-160180
Int. Cl.³ H02P *1/00, 9/40*
U.S. Cl. 322—8 **7 Claims**

1. A load starting device for starting a load powered by an AC generator, comprising:
a magnetic circuit associated with the generator;
a load starting section having a load-starting coil wound about the magnetic circuit; and
a saturating coil, also wound about the magnetic circuit, the load-starting and saturating coils being electrically wound in the same direction about the magnetic circuit such that when power is applied to the saturating coil from the generator, current flow in the saturating coil induces a voltage in the load-starting coil having an opposite polarity to that which would be induced on the load-starting coil upon its connection to the generator; and
switch means for (a) applying power from the generator first to the saturating coil, then (b) applying power from the

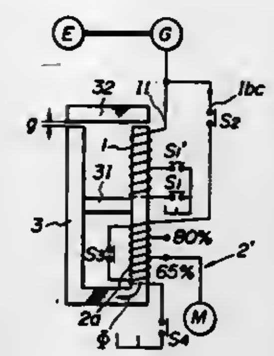

generator to the load-starting coil without disconnecting the application of power to the saturating coil, and then (c) removing the application of power to the saturating coil, whereby the voltage induced in the load-starting coil by current flowing in the saturating coil tends to suppress a surge of current from the generator through the load-starting coil that would otherwise occur in the absence of a saturating coil induced voltage, thereby suppressing an extreme voltage drop of the generator upon the initial application of power to the load through the load-starting coil.

4,300,090
DIRECT CURRENT POWER SUPPLY
Harold J. Weber, 20 Whitney Dr., Sherborn, Mass. 01770
Filed Mar. 2, 1979, Ser. No. 16,932
Int. Cl.³ G05F *3/02*
U.S. Cl. 323—311 **11 Claims**

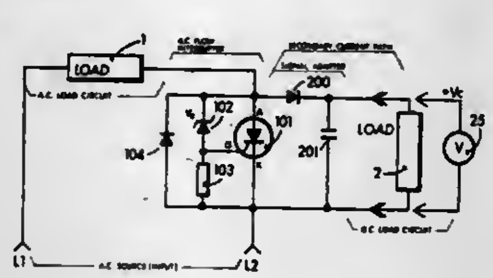

1. Power supply means adapted to provide a stable source of direct current power from a substantially unstable alternating current source means, including in combination:
a. a source of alternating current (a.c.);
b. an a.c. load means;
c. a.c. flow interrupter means including an input effectively coupled to said a.c source and an output effectively coupled to said a.c. load means, producing at least a state of high impedance and low impedance therebetween, said high impedance effective to substantially interrupt the alternating current power flow between the said input thereto and the said output therefrom, thereby producing an interrupter signal substantially between the said input and the said output for at least a small percentage of at least one half of each successive acted upon full a.c. cycle, with the so-produced interrupter signal magnitude having an instantaneous retarded value which is substantially proportional to the value of the a.c. source signal modified by the ratio of the impedance through the a.c. load means effectively in series with the impedance of a d.c. load means;

d. control means including a voltage responsive means coupled to said interrupter means and operative therewith to abruptly induce said state of low impedance thereacross when the said interrupter signal magnitude reaches a predetermined value, thereby limiting said interrupter signal magnitude to at least not substantially exceed said predetermined value, whereby further said low impedance effects a maximum coupling of a.c. power between said source and said a.c. load; and,
e. secondary current path means, coupled to said interrupter means, further including signal adaptive means operative with said interrupter signal so as to provide a substantially stable, and usually low, direct current (d.c.) value therefrom at an output terminal means.

4,300,091
CURRENT REGULATING CIRCUITRY
Otto H. Schade, Jr., N. Caldwell, N.J., assignor to RCA Corporation, New York, N.Y.
Filed Jul. 11, 1980, Ser. No. 167,696
Int. Cl.³ G05F *3/16*
U.S. Cl. 323—315 **30 Claims**

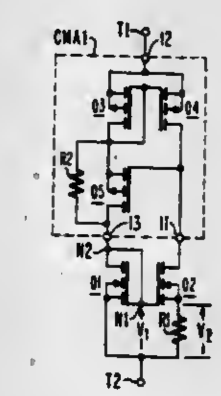

1. Current regulating circuitry comprising:
first and second field-effect transistors of the same conductivity type, the first relatively enhancement-mode and the second relatively depletion-mode, each having respective source, drain and gate electrodes;
a resistive element connected between the source electrodes of said first and second transistors;
an interconnection between the gate electrodes of said first and second transistors; and
means, responsive to the difference between the drain currents of said first and second transistors, for generating a voltage applied between the source electrode of said first transistor and the interconnection between the gate electrodes of said first and second transistors, thereby completing a degenerative drain-to-drain feedback connection for said first transistor and a regenerative drain-to-drain feedback connection for said second transistor, co-operating to regulate the drain and source current of each of said first and second transistors.

4,300,092
PHASE MATCH MEASURING SYSTEM
Harry F. Strenglein, Clearwater, Fla., assignor to Sperry Corporation, New York, N.Y.
Filed Mar. 24, 1980, Ser. No. 132,741
Int. Cl.³ G01R *27/00*
U.S. Cl. 324—57 R **9 Claims**

1. An apparatus for phase matching a plurality of transmission lines comprising:
means for coupling incident linear FM signals to said plurality of transmission lines;
means for terminating each of said plurality of transmission lines for reflecting said linear FM signals; and

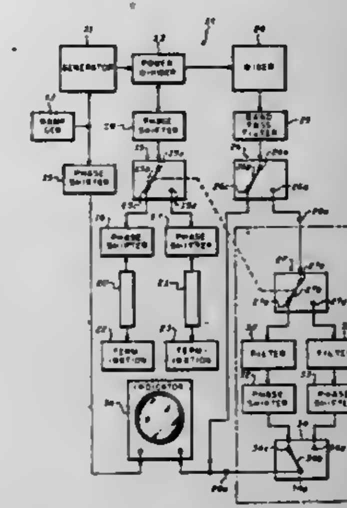

means adapted to receive said incident linear FM signals and said reflected linear FM signals for mixing said incident and reflected linear FM signals to provide signals representative of the phase variations between said plurality of transmission lines.

4,300,093
DEVICE FOR MEASURING THE AMOUNT OF ROTATION OF A ROTATING OBJECT
Hiroomi Ogasawara, 3821-4, and Masaomi Ogasawara, 3833, both of Yamakita, Yamakitamachi, Ashigarakami-gun, Kanagawa-ken, Japan
Filed Dec. 3, 1979, Ser. No. 99,250
Int. Cl.³ G01R *27/26*
U.S. Cl. 324—61 R **6 Claims**

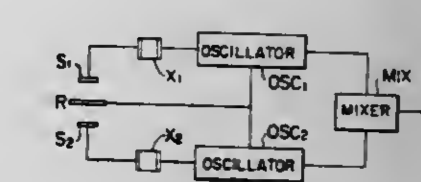

1. A device for measuring the amount of rotation of a rotating object comprising:
(a) sensor means including (i) a cylindrical electrode member having gear-like graduations cut on the cylindrical outer wall thereof, (ii) a first pair of electrode plate members confronting said cylindrical electrode member and having gear-like graduations on the confronting surfaces thereof to form therewith a first pair of capacitors, the relation of the graduations on the confronting surface of a first one of said first pair of electrode plate members and the graduations on the outer wall of said cylindrical electrode member being shifted 180° in phase from the relation of the graduations on the confronting surface of the other one of said first pair of electrode plate members and the graduations on the outer wall of said cylindrical electrode member, and (iii) a second pair of electrode plate members confronting said cylindrical electrode member and having gear-like graduations on the confronting surfaces thereof to form therewith a second pair of capacitors, the relation of the graduations on the confronting surface of a first one of said second pair of electrode plate members and the graduations on the outer

wall of said cylindrical electrode member being the same as the relation of the graduations on the confronting surface of the first one of said first pair of electrode plate members and the graduations on the outer wall of said cylindrical electrode member and being shifted 180° in phase from the relation of the graduations on the confronting surface of the other one of said second pair of electrode plate members and the graduations on the outer wall of said cylindrical electrode member;

one of (i) said cylindrical electrode member and (ii) said first and second pairs of electrode plate members being adapted to rotate in response to rotation of the rotating object while the other one thereof is stationary, so that the capacitance of a first capacitor of each of said pairs of capacitors increases and the capacitance of the other capacitor of each of said pairs of capacitors correspondingly decreases differentially as said rotating object rotates;

(b) two oscillator circuits, one oscillator circuit having said first one of said first pair of capacitors and said first one of said second pair of capacitors incorporated therein as frequency varying components, the other oscillator circuit having said second one of said first pair of capacitors and said second one of said second pair of capacitors incorporated therein as frequency varying components; and

(c) mixer means connected to said two oscillator circuits for providing a frequency difference signal determined by the difference in the frequencies of said two oscillator circuits and indicative of the extent of rotation of the rotating object.

4,300,094

FINISH MEASURING METHOD AND APPARATUS

John S. Piso, Framingham, and James K. Roberge, Lexington, both of Mass., assignors to Micro Sensors, Inc., Holliston, Mass.

Filed Apr. 27, 1978, Ser. No. 900,611

Int. Cl.³ G01R *27/02;* **G01L** *5/04*

U.S. Cl. 324—65 R **32 Claims**

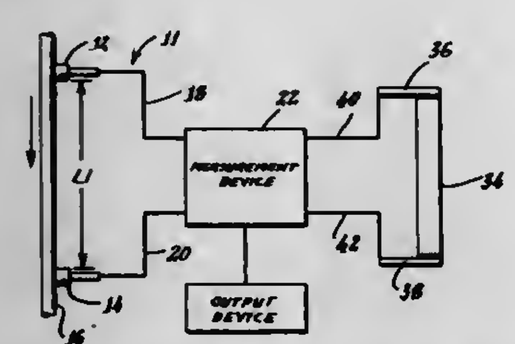

1. A measuring apparatus for measuring the amount of an electrically conductive medium applied to a moving filament comprising:

a first electrical, filament contact element positionable adjacent said filament for sliding electrical contact therewith;

a second electrical, filament contact element spaced from said first filament contact element along the path of said moving filament and positionable for sliding electrical contact with said filament, said first and second filament contact elements defining a conductive length of filament;

a reference cell of predetermined dimensions containing a sample of said electrically conductive medium, and having spaced electrical contact elements in electrical contact with said contained sample; and

electrical circuit means connected to said filament contact elements and to said reference cell contact elements for determining the amount of said electrically conductive medium applied to said filament as a function of the ratio of the conductance of said length of filament to the conductance of said sample.

4,300,095

SELF EXCITED SATURATABLE CORE MAGNETIC FIELD DETECTION APPARATUS

Melvin H. Rhodes, Cedar Rapids, Iowa, assignor to Rockwell International Corporation, El Segundo, Calif.

Filed Aug. 22, 1979, Ser. No. 68,839

Int. Cl.³ G01R *33/04*

U.S. Cl. 324—255 **6 Claims**

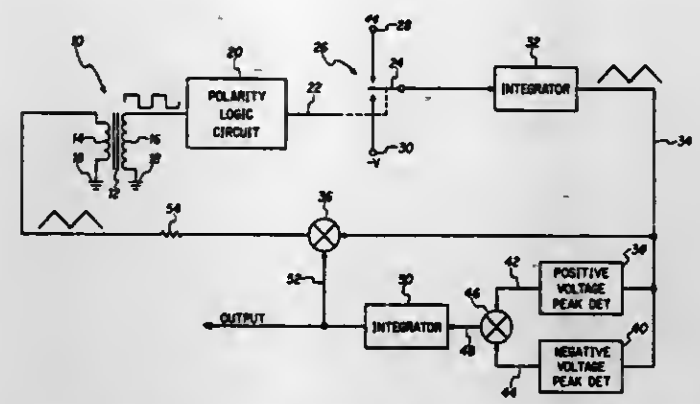

1. Magnetic field sensing apparatus comprising, in combination:

saturable core solid rod reactor means including a first winding coupled through a magnetic core to a second winding each of said windings being coaxially wound relative the mechanical axis of said solid rod means;

polarity logic circuit means, connected to said first winding and providing an integrated output which changes output signal slope when the amplitude of signals obtained from said first winding passes predetermined values;

detection means, connected to said logic circuit means, for producing a signal indicative of time non-symmetry, with respect to a reference, in the signal obtained from said reactor means;

summing means, connected to said logic circuit means, to said detection means and to said second winding for providing a biased oscillatory drive feedback signal, the bias portion of the feedback signal varying directly as a function of field strength in the vicinity of said reactor means; and

output means, connected to said summing means, for outputting a field strength indicative signal.

4,300,096

IMAGING SYSTEMS

Colin G. Harrison, High Wycombe, and Ian R. Young, Sunbury on Thames, both of England, assignors to EMI Limited, Hayes, England

Filed May 16, 1979, Ser. No. 39,649

Claims priority, application United Kingdom, May 25, 1978, 22295/78

Int. Cl.³ G01N *27/00, 24/08*

U.S. Cl. 324—309 **16 Claims**

1. A nuclear magnetic resonance apparatus, for examining at least one slice of a body, the apparatus including means for applying magnetic fields to the body to cause resonance preferentially in said slice, means for applying a pulsed magnetic field having a gradient across said at least one slice to produce phase dispersion in said resonance, and means for sensing, during the application of said gradient field, the resonance signal induced, wherein means are provided to cause the gradient field when in use to have a gradient in different directions in the slice at different times by varying proportions of two component magnetic fields with orthogonal gradients, the apparatus further including means for sensing the magnetic fields at a plurality of positions in the plane of the slice, means for deriving therefrom error signals indicative of differences between the

fields measured in two orthogonal directions and those fields required to provide the gradient magnetic field of a desired

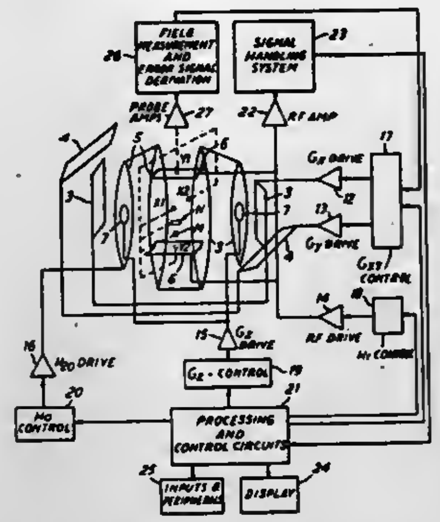

magnitude in a desired direction, and means for using the error signals to adjust the component fields to their required values.

4,300,097

INDUCTION BALANCE METAL DETECTOR WITH FERROUS AND NON-FERROUS METAL IDENTIFICATION

John E. Turner, El Paso, Tex., assignor to Techna, Inc., El Paso, Tex.

Filed Jul. 27, 1979, Ser. No. 62,237

Int. Cl.³ G01V *3/11, 3/165*

U.S. Cl. 324—329 **5 Claims**

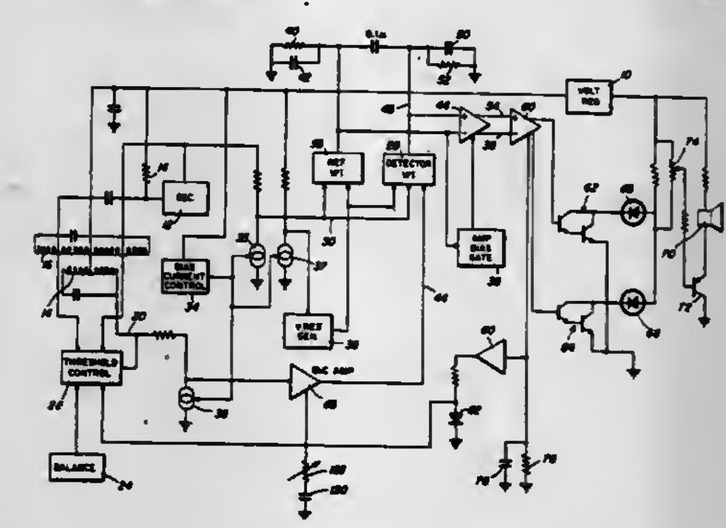

1. In an induction balance metal detector having a signal source supplying a reference signal for producing an electromagnetic field and a sensor responsive to said electromagnetic field for providing a signal phase shifted from the reference signal by metal in said field, phase detecting means connected to the sensor for producing a detector signal in response to metal in said field, and indicator means connected to the phase detecting means for identifying the metal as ferrous or non-ferrous, the improvement comprising signal input means connected to the phase detecting means for independently supplying the reference and sensor signals thereto with a predetermined phase difference in the absence of metal in the field, said phase detecting means including means for producing said detector signal as a function of either the reference signal or the sensor signal depending on the phase difference between and relative amplitudes of the reference and sensor signals, and means connected to the indicator means for comparing the detector signal with the reference signal to produce one of two metal identifying signals depending on the direction in which the reference and sensor signals deviate from said predetermined phase difference, said indicating means having two separate channels to which the two metal identifying signals are respectively fed.

4,300,098

MICROWAVE ELECTROMAGNETIC LOGGING WITH MUDCAKE CORRECTION

Gerald S. Huchital, Brookfield, and Stanley Gianzero, Ridgefield, both of Conn., assignors to Schlumberger Technology Corporation, New York, N.Y.

Filed May 24, 1979, Ser. No. 42,385

Int. Cl.³ G01V *3/30*

U.S. Cl. 324—338 **18 Claims**

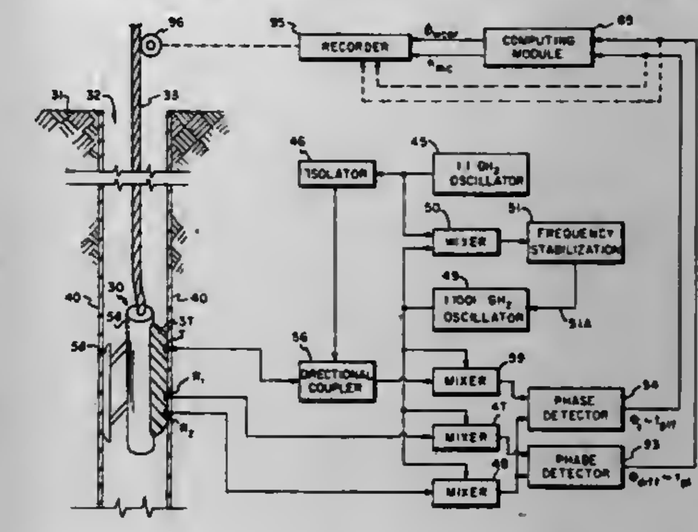

1. Apparatus for determining the mudcake-corrected water-filled porosity of formations surrounding a borehole, comprising:

a source of microwave electromagnetic energy;

a logging device suspendable in the borehole;

a transmitting antenna mounted on said device for transmitting said microwave electromagnetic energy into said formations;

near and far spaced receiving antennas mounted on said device for receiving microwave electromagnetic energy from said formations;

means responsive to the outputs of said receiving antennas for obtaining a differential measurement of travel time of said energy;

means responsive to the output of one of said receiving antennas for obtaining a direct measurement of travel time of said energy; and

means for determining the mudcake-corrected water-filled porosity of said formations from said differential and said direct measurements.

4,300,099

FIRE DETECTING SYSTEM

Masaki Maruyama, Machida, Japan, assignor to Hochiki Corporation, Tokyo, Japan

Filed Jun. 7, 1979, Ser. No. 46,633

Claims priority, application Japan, Jun. 7, 1978, 53-67719

Int. Cl.³ G08B *17/00;* **G08C** *23/00*

U.S. Cl. 328—6 **6 Claims**

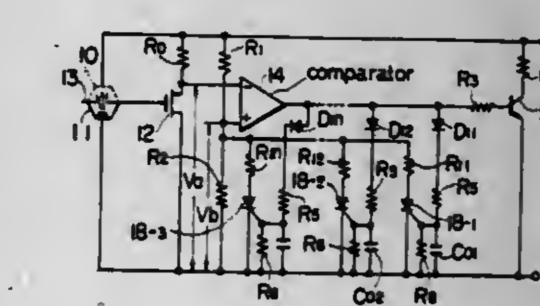

1. A fire detecting system comprising:

power connecting means for connection to an electric power supply;

fire detecting means connected to said power connecting means, for detecting a quantity of combustion products

generated by a fire and for generating a signal corresponding to the quantity detected, said fire detecting means having a variable electrical impedance which varies in accordance with the quantity of said product detected for correspondingly varying said generated electric signal;

a receiver;

receiver connecting means for connecting said fire detecting means to said receiver for transmitting said generated signal from said fire detecting means to said receiver;

amplifier means connected respectively to said power connecting means and said receiver connecting means, and including a collector electrode connected to said first detecting means, said amplifier means for providing a varying current, said current varying in accordance with a change in said generated signal of said first detecting means;

voltage differential responding means including, a first input terminal connected to said amplifier means for receiving a voltage potential therefrom, a second input terminal, and an output terminal for outputting a signal;

a potential dividing circuit connected at said second input terminal to said voltage differential responding means at a potential dividing point of said potential dividing circuit, said potential dividing circuit including a plurality of connectable resistance elements individually connectable to said power connecting means for providing respective different potentials from said potential dividing circuit and said potential dividing circuit transmitting said respective difference potentials to said second input of said voltage differential responding means causing said signal outputted therefrom to change;

a reference operation voltage changing circuit connected to the output terminals of said voltage differential responding means, said reference operation voltage changing circuit including at least one time constant circuit for storing said output signal from said voltage differential responding means for a specified amount of time;

at least one control circuit operatively connected to said at least one time constant circuit for selectively connecting said plurality of resistance elements to said potential dividing circuit in response to an output signal generated by said at least one time constant circuit; and

a plurality of information output terminals connected to said reference operation voltage changing circuit and connected to said receiver for transmitting the output from said reference operation voltage changing circuit to said receiver.

4,300,100

CIRCUIT ARRANGEMENT FOR CORRELATING SEVERAL ISOFREQUENTIALLY STEPPED COUNTING CHAINS

Francesco Marchelli, and Anes Sbuelz, both of Milan, Italy, assignors to Societa Italiana Telecomunicazioni Siemens S.p.A., Milan, Italy

Filed Jul. 27, 1979, Ser. No. 61,469

Claims priority, application Italy, Jul. 28, 1978, 26238 A/78

Int. Cl.³ H03K ***23/00***

U.S. Cl. 328—109 **9 Claims**

1. In a system for the periodic emission of a plurality of timing signals, including a plurality of self-resetting multistage binary counters with stepping inputs connected to respective sources of trains of clock pulses of substantially identical cadence but indeterminate phase relationship, each counter also having a zero-setting input,

the combination therewith of:

a plurality of correlation circuits respectively associated with said binary counters and connected to the respective sources of clock pulses;

an individual control circuit inserted between each of said correlation circuits and a zero-setting input of the associated counter;

a plurality of synchronization circuits respectively associated with said binary counters, each of said synchronization circuits having a first input terminal connected to an output of the associated counter for receiving therefrom a full-count signal, a second input terminal connected to the respective source of clock pulses and output means connected to the control circuit of the associated counter and to the correlation circuit associated with every other of said counters for delivering a restarting signal thereto in response to said full-count signal; and

inhibiting means for selectively deactivating the correlation

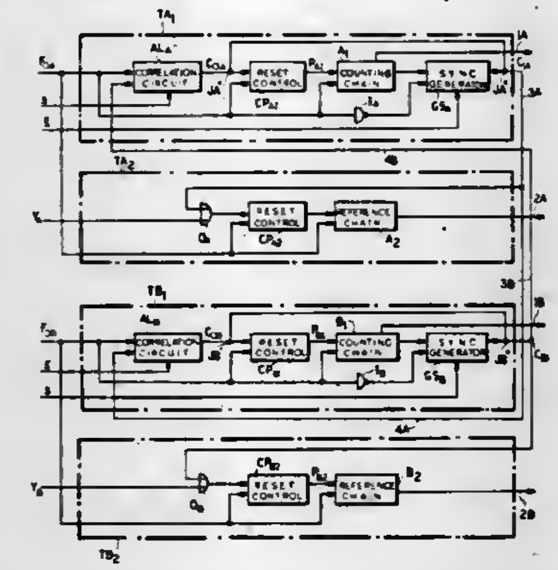

circuit associated with one of said counters and the synchronization circuit associated with every other of said counters, each active correlation circuit being responsive to the presence of a restarting signal from the active synchronization circuit for emitting to the associated control circuit an internal command in predetermined time relationship with the received clock pulses, each control circuit being responsive to both said restarting signal and said internal command for delivering an actuating pulse to the zero-setting input of the associated counter.

4,300,101

MULTIPLE PARALLEL INPUT NOISE REDUCTION SYSTEM

Vladimir A. Shvartsman, Louisville, Ky., assignor to Nancy Flowers and Brian M. Kennelly, both of Louisville, Ky., part interest to each

Filed Jan. 3, 1980, Ser. No. 109,288

Int. Cl.³ H03G ***3/24***

U.S. Cl. 330—149 **6 Claims**

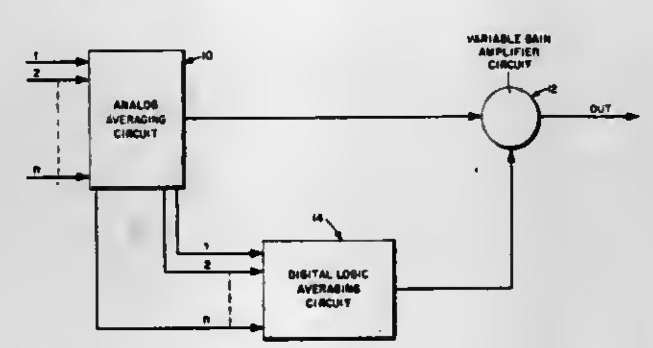

1. A multiple parallel input noise reduction system for amplifying a low level electrical signal comprising:

a multiple number of parallel inputs each transmitting an input signal corresponding to the low level electrical signal;

analog averaging means connected to said multiple number of parallel inputs for amplifying each of the input signals and combining the input signals together to form a first output signal;

digital logic averaging means connected to said analog averaging means for examining the instantaneous polarity of each of the amplified input signals from said analog averaging means and generating a coincidence signal in the event all the amplified input signals have the same instantaneous polarity; and

variable gain amplifier means connected to said analog averaging means for amplifying the first output signal to generate a second output signal, said variable gain amplifier means having gain control means responsive to the coincidence signal from said digital logic averaging means for adjusting the gain of said variable gain amplifier means to amplify those portions of the first output signal corresponding to the true low level electrical signal.

4,300,102

VARIABLE GAIN CONTROL CIRCUIT

Shigeki Inoue, Toyokawa, Japan, assignor to Hitachi, Ltd., Tokyo, Japan

Filed May 11, 1979, Ser. No. 38,312

Claims priority, application Japan, May 12, 1978, 53-55564

Int. Cl.³ H03F ***3/45;*** **H03G** ***3/00***

U.S. Cl. 330—254 **5 Claims**

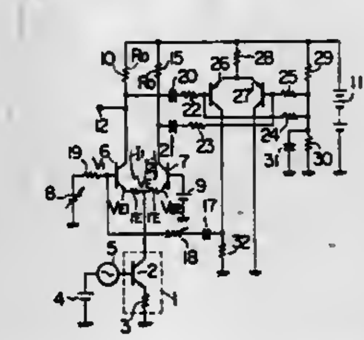

1. A variable gain control circuit comprising:

a voltage-current converter circuit for producing an output signal current proportional to the voltage of an input signal at the output terminal thereof in response to said input signal;

a first differential amplifier constituted by a pair of transistors, each transistor having an input electrode, an output electrode and a common electrode having an inherent bulk resistance, the common electrodes of said pair of transistors being connected to said output terminal of said voltage-current converter circuit;

a fixed bias voltage source for applying a fixed bias voltage to the input electrode of one of said pair of transistors;

a variable voltage bias source for applying a bias voltage to the input electrode of the other transistor, said bias voltage being variable;

an output node connected to the output electrode of said other transistor, an output signal proportional to the output current in the output electrode of the said other transistor being produced at said output node;

a second differential amplifier having a pair of input circuits and an output circuit, one of said input circuits being connected to the output electrode of said one of transistors, the other input circuit being connected to the output electrode of said other transistor, said output circuit producing an output voltage proportional to the difference between the output currents flowing into said respective electrodes of said pair of transistors; and

a feedback circuit connected between the output circuit of said second differential amplifier and the input electrode of said other transistor of said first differential amplifier, for feeding back to the input electrode of said other transistor an AC component of an output signal of said second differential amplifier in a substantially equal amplitude to that of an AC differential voltage produced across the respective emitter bulk resistances of said pair of transistors forming said first differential amplifier.

4,300,103

PUSH-PULL AMPLIFIER

Rudy J. van de Plassche, Eindhoven, Netherlands, assignor to U.S. Philips Corporation, New York, N.Y.

Filed Oct. 12, 1979, Ser. No. 84,042

Claims priority, application Netherlands, Oct. 30, 1978, 7810772

Int. Cl.³ H03F ***3/30***

U.S. Cl. 330—274 **9 Claims**

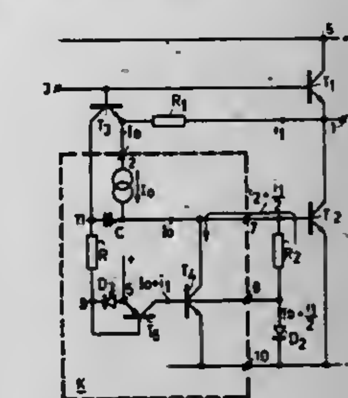

1. A push-pull amplifier comprising a first and a second transistor of the same conductivity type, whose collector-emitter paths are included in series between the power supply terminals, the emitter electrode of the first transistor being connected to the collector electrode of the second transistor and to an output terminal, the base electrode of the first transistor being connected to an input terminal, and means being provided for driving the second transistor as a function of the drive of the first transistor, characterized in that said means comprise a measuring circuit (D_1-Z_1) between the base and emitter electrode of the first transistor (T_1), which measuring circuit includes a series connection of a first semiconductor junction (D_1) and a first impedance (Z_1), a control circuit (D_2-Z_2) between the base and the emitter electrode of the second transistor (T_2), which control circuit includes a series connection of a second semiconductor junction (D_2) and second impedance (Z_2), a current-source circuit (I_0) coupled to the junction of said first semiconductor junction and said first impedance for providing the quiescent current through the first and the second semiconductor junctions (D_1 and D_2) whereby when said push-pull amplifier is at rest no currents flow through said first and said second impedances, and a coupling circuit (K) for adapting the currents through the control circuit (D_2-Z_2) to those through the measuring circuit (D_1-Z_1) in such a way that in the case of a normal drive on the input terminal (3) the sum of the base-emitter voltages (V_{be1}+-V_{be2}) of the first and the second transistors (T_1 and T_2) remains substantially constant.

4,300,104

AUTOMATIC GAIN CONTROL CIRCUIT FOR A NOISE PULSE CANCELLER

Kouichi Tanaka, Tokyo, and Kiyoshi Amazawa, Ohmiya, both of Japan, assignors to Nippon Electric Co. and Clarion Co., Ltd., both of Tokyo, Japan

Filed Jul. 17, 1979, Ser. No. 58,400

Claims priority, application Japan, Jul. 17, 1978, 53-98782[U]

Int. Cl.³ H03G ***3/32***

U.S. Cl. 330—280 **3 Claims**

1. In an automatic gain control circuit responsive to an input signal having a variable signal level for producing a gain control signal, said gain control circuit connected to an amplifier which is automatically gain controlled by said gain control signal, said gain control circuit having first and second terminals connected to an electric power source, an input terminal receiving said input signal, and an output terminal connected to said amplifier, said control circuit comprising first circuit means connected to said first and second terminals and said input terminal for comparing said input signal level with a

preselected level to produce an energizing signal when said input signal level exceeds said preselected level, a time constant circuit for accumulating said energizing signal to provide an accumulation level, and output means connected to said time constant circuit and said output terminal for producing said gain control signal in accordance with said accumulation level,

the improvement wherein said first circuit means comprises:

first bias means connected between said first and said second terminals for producing a first predetermined bias;

second bias means connected between said first and second terminals for producing a second predetermined bias lower than said first predetermined bias to substantially define said preselected level by a difference between said first and said second predetermined biases;

a first and a second transistor having a first and a second emitter connected to a point of connection, a first and a second collector coupled to said first terminal, and a first

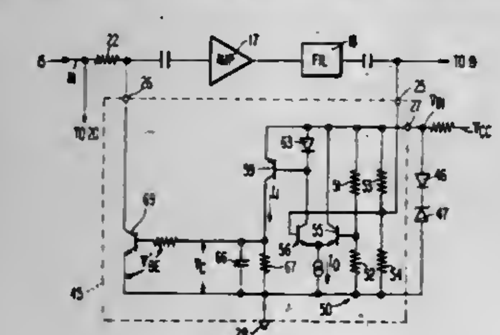

and a second base connected to said first and said second bias means, respectively, a preselected one of said first and said second bases being connected to said input terminal;

a constant current circuit connected between said point of connection and said second terminal;

a third transistor having a third emitter connected to said first terminal, a third collector, and a third base connected to a prescribed one of said first and said second collectors for providing said energizing signal through said third collector, said energizing signal having a predetermined level, and

said time constant circuit comprising a resistor connected between said third collector and said second terminal and a capacitor connected across said resistor, said capacitor being discharged with a first time constant substantially determined by said capacitor and said resistor and charged with a second time constant which is different from said first time constant and which is determined by said energizing signal level.

4,300,105
TWO-CAVITY KLYSTRON OSCILLATOR
Guido Busacca, and Antonio Muratore, both of Palermo, Italy, assignors to Societa Italiana Telecomunicazioni Siemens S.p.A., Milan, Italy
Filed Jan. 22, 1980, Ser. No. 114,293
Claims priority, application Italy, Jan. 24, 1979, 19550 A/79
Int. Cl.³ H01J *25/10;* **H03B** *9/04*
U.S. Cl. 331—83 **4 Claims**

1. A klystron oscillator comprising:

a conductive housing forming an input cavity and an output cavity with respective pairs of confronting re-entrant formations defining a first gap and a second gap interconnected by a drift space and centered on a common axis, said input cavity being resonant in a TM_{010} mode, said output cavity being resonant in a TM_{0n0} mode, n being an integer greater than 1, said cavities being coupled to each other by a feedback connection offset from said axis;

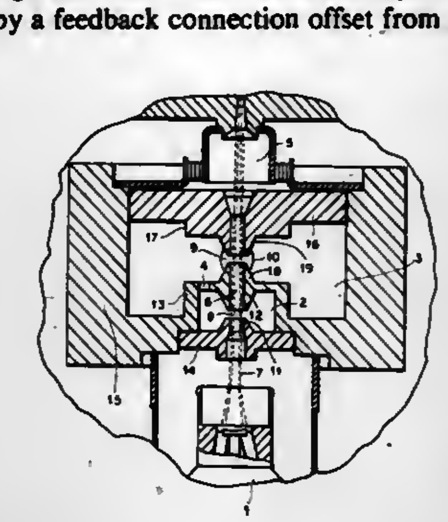

electrode means generating an electron beam traversing said first gap, said drift space and said second gap in succession; and

output means coupled with said second cavity.

4,300,106
LARGE VOLUME MULTIPLE-PATH NUCLEAR PUMPED LASER
Robert A. Frosch, Administrator of the National Aeronautics and Space Administration, with respect to an invention of; Frank Hohl, Newport News, and Russell J. De Young, Hampton, both of Va., assignors to The United States of America as represented by the Administrator of the National Aeronautics and Space Administration, Washington, D.C.
Filed May 21, 1979, Ser. No. 41,141
Int. Cl.³ H01S *3/05*
U.S. Cl. 331—94.5 C **4 Claims**

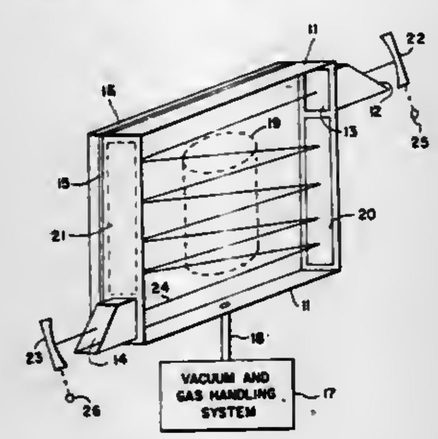

1. A laser comprising:

an enclosure with first and second windows and containing a lasing medium;

a first mirror with zero transmission located outside said enclosure adjacent said first window;

a second mirror with finite transmission located outside said enclosure adjacaent said second window for providing the output for said laser;

a third flat mirror;

a fourth flat mirror;

pumping means pumping radiation into the lasing medium to cause lasing along an optical path between the first and second mirrors;

said first, second, third and fourth mirrors and said first and second windows being located and oriented such that the optical path is from the first mirror through the first window, through the lasing medium to the third mirror, through the lasing medium to the fourth mirror, back and forth several times between the third and fourth mirrors, through the second window to the second mirror, and then along the same path back to the first mirror whereby

the optical path of the laser has a distance several times the distance across the laser medium; and

means for changing the orientations of said first and second mirrors to alter the number of times the optical path goes back and forth between the third and fourth mirrors enroute between the first and second mirrors thereby changing the length of the optical path.

4,300,107
TRAP DOPED LASER COMBINED WITH PHOTODETECTOR
John A. Copeland, III, Fair Haven, N.J., assignor to Bell Telephone Laboratories, Incorporated, Murray Hill, N.J.
Filed Jul. 18, 1979, Ser. No. 58,470
Int. Cl.³ H01S *3/19*
U.S. Cl. 331—94.5 H **8 Claims**

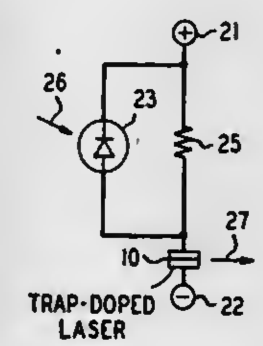

1. In a heterostructure semiconductor laser having its material elements selected from the group consisting of indium, gallium, aluminum, arsenic and phosphorus, an active region layer for generating an output optical pulse in response to an electrical pulse that exceeds a predetermined threshold level, characterized in that,

said active region layer includes deep-level electron traps having a concentration density such that the optical absorption parameter corresponding to said electron traps in said active region exceeds 30 cm^{-1}, said electron traps being defects in the crystal lattice of the active region layer that have been created by ion bombarding said active region layer.

4,300,108
ELECTRICAL ATTENUATOR
Elmer E. Shuck, Whitesboro, and Howard R. Stevenson, Jr., Herkimer, both of N.Y., assignors to General Electric Company, Utica, N.Y.
Filed Dec. 14, 1979, Ser. No. 103,324
Int. Cl.³ H03H *7/25*
U.S. Cl. 333—81 R **10 Claims**

1. A signal attenuator for an IF or RF signal comprising:

a. a digital mapping means capable of receiving at least one digital control word corresponding to an amount of attenuation desired and outputting at least one digital current gain control word and at least one digital voltage gain control word;

b. a current gain means receiving said digital current gain control word and converting it into a first analog current;

c. a control diode having its anode end connected to a ground potential and its cathode end connected to said current gain means so as to receive said first analog current;

d. a first voltage follower having its input connected to the cathode of said control diode so as to measure a first voltage, said first voltage being the voltage generated across said control diode;

e. a voltage gain means receiving said digital voltage gain control word and converting it into a second voltage;

f. a summing means having an output which represents the sum of said first and second voltages;

g. a second voltage follower having an input and output, said input being connected to the output of said summing means;

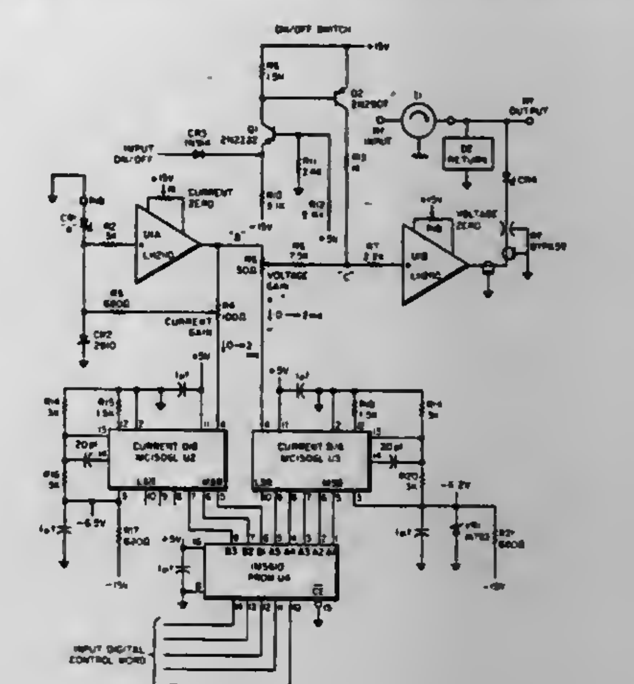

h. an attenuating diode having its cathode connected to the output of said second voltage follower and having its anode connected to said signal.

4,300,109
TURRET TYPE TELEVISION TUNER HAVING AN ELASTIC AND A RIGID SUPPORT DISC
Takeyoshi Tanida, Osaka, Japan, assignor to New Nippon Electric Co., Ltd., Osaka, Japan
Filed Mar. 24, 1980, Ser. No. 133,604
Claims priority, application Japan, Mar. 31, 1979, 54-39231
Int. Cl.³ H03J *5/30*
U.S. Cl. 334—51 **5 Claims**

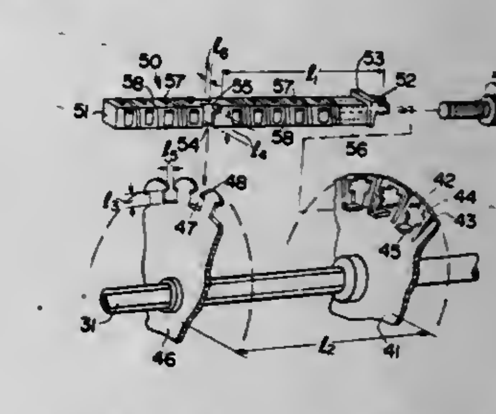

1. A turret type tuner with memory fine tuning arrangements comprising: chassis base means including front and rear wall means; selector shaft means journalled in said front and rear wall means; an elastic support disc made of insulating plastic material secured to said selector shaft means; a rigid support disc made of conductive material secured to said selector shaft means and spaced from said elastic support disc; a plurality of coil units operatively arranged on the periphery of said elastic support disc and said rigid support disc, each of said coil units including an elongated insulator with a cavity at one end portion thereof, terminal contacts fixed to said insulator, and a plurality of coil means wound on said insulator and connected to said terminal contacts and a plurality of fine tuning elements movably positioned within said respective cavities for adjusting the inductance of the coil means located at said one end portion of said elongated insulators; the elongated insulator of each said coil unit being provided with a slim end portion and an intermediate grooved portion, said elastic support disc including a plurality of divided radial sector portions separated from each other by slit means for independent resilient deflection, each divided portion being provided with a hole for receiving the slim end portion of the elongated

insulator of a coil unit, said rigid support disc being provided with a plurality of notches for receiving the intermediate grooved portion of said elongated insulator, said coil unit being retained in place by deflecting the respective divided portion of the elastic disc for alignment of the intermediate grooved portion and respective rigid disc notch, and interlocking said grooved portion and notch under the restoring force of the deflected divided portion; said elastic support disc being provided with a plurality of tongue means at said respective divided portions adjacent said plurality of holes for retaining said fine tuning elements in cooperation with the cavities at the end portions of said elongated insulators, whereby each of said fine tuning elements may be adjusted for memory fine tuning.

4,300,110
TRIP INTERLOCK FOR STATIC TRIP CIRCUIT BREAKERS
Eric W. Bayer, Wolcott, and Edward A. Palmisano, Simsbury, both of Conn., assignors to General Electric Company, New York, N.Y.
Filed Mar. 14, 1980, Ser. No. 130,320
Int. Cl.³ H01H *83/00*
U.S. Cl. 335—6 **9 Claims**

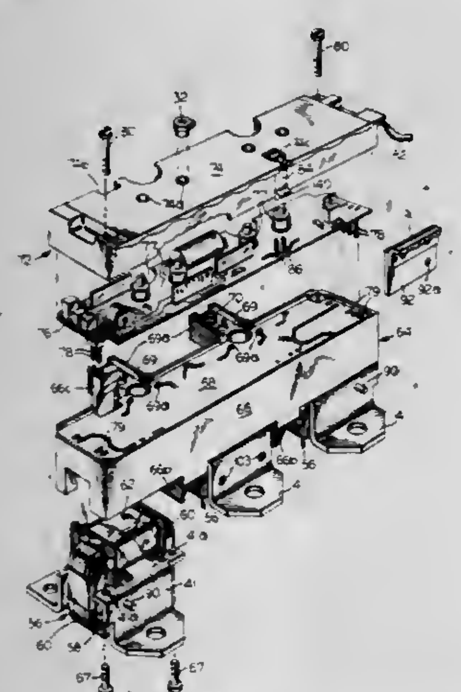

1. In combination with a molded case industrial circuit breaker having a latch mechanism for releaseably sustaining a breaker movable contact operating mechanism in its reset condition requisite to subsequent breaker contact closure, a static trip unit removably mounted with the breaker molded case, and a trip solenoid separately removably mounted within the breaker molded case in position to induce, in response to electrical activation of its energizing coil under the control of the trip unit, tripping action of the latch mechanism pursuant to releasing the breaker operating mechanism from its reset condition and thereby produce abrupt breaker contact opening, a trip interlock comprising, in combination:

A. an electrical receptacle carried by the trip unit and electrically connected into signal processing circuitry of the trip unit;
B. a plug electrically terminating the energizing coil of the trip solenoid, said plug being inserted into said receptacle to electrically connect the energizing coil into the signal processing circuitry;
C. a trip interlock member included in the latch mechanism, said member normally biased to a latch defeat position disabling the latch mechanism from sustaining the breaker operating mechanism in its reset condition; and
D. a trip interlock actuator carried by said plug, with said plug inserted in said receptacle, said actuator assuming a position of engagement with said trip interlock member effective in displacing same from its latch defeat position and thereby enabling the latch mechanism to sustain the breaker operating mechanism in its reset condition.

4,300,111
DEVICE IN IGNITION COILS
Sven H. Johansson, Kompassgatan 12, and Knut E. M. Jansson, Diskusgatan 16, both of 662 00 Amal, Sweden
Filed Mar. 7, 1979, Ser. No. 18,186
Claims priority, application Sweden, Mar. 7, 1978, 7802588
Int. Cl.³ H01F *27/04, 15/10*
U.S. Cl. 336—96 **5 Claims**

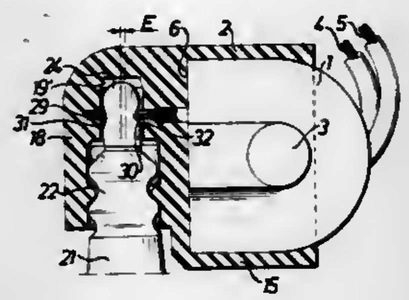

1. An ignition coil for use with a spark plug, having an insulator portion, comprising:
(a) a coil;
(b) a contact terminal having an opening and projecting from said coil and connected to provide a high voltage therefrom, said terminal being adapted to form a connection with the spark plug;
(c) an elastic body only partially surrounding said coil and slidably detachable therefrom, said body having a portion extending as a closed sleeve in surrounding eccentric relationship to said terminal opening and receptive of and engageable with the insulator portion of the spark plug at its open end for providing a seal therewith and, said body being adapted to provide a sprung coaction acting transversely to the terminal of the spark plug for thus keeping the coil and spark plug together as a unit and for locking said slidably detachable elastic body to said coil.

4,300,112
CIRCUIT ARRANGEMENT FOR CONTROLLING TRANSFORMER CURRENT
George E. Leibinger, and Albert Rowe, both of Pittsfield, Mass., assignors to General Electric Company
Filed May 19, 1980, Ser. No. 151,201
Int. Cl.³ H01F *27/28*
U.S. Cl. 336—180 **9 Claims**

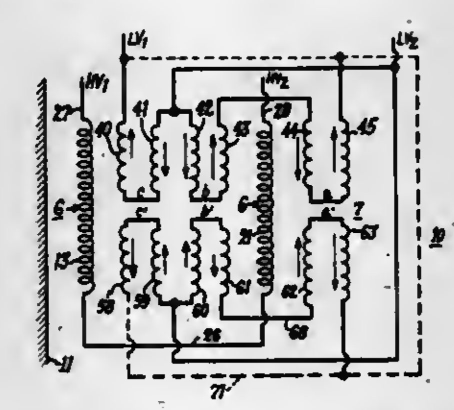

1. A winding arrangement for controlling transformer current comprising:
a core 11,
a first winding 6 and a second winding 7 in electromagnetic relation with said core;
a first part 15–17 and a second part 18–19 of said second winding 7 arranged between an inner portion 13 and an outer portion 21 of said first winding 6;
a third part 23–24 of said second winding 7 arranged outside said outer portion 21 of said first winding 6 and electrically connected in series with said second part 18–19 of said second winding 7;
said inner portion 13 and said outer portion 21 of said first winding 6 being electrically connected in series; and
said second part 18–19 of said second winding 7 and said third part 23–24 of said second winding 7 having a plurality of wire turns 18–19, 23–24 equal to a corresponding plurality of wire turns 15–17 within said first part of said second winding for distributing transformer current within said second winding.

4,300,113
FUSED ELECTRIC PLUG
Rene Bronnenhuber, 124 Lakeside Dr., Piscataway, N.J. 08854
Filed Sep. 6, 1979, Ser. No. 73,081
Int. Cl.³ H01H *85/02*
U.S. Cl. 337—187 **1 Claim**

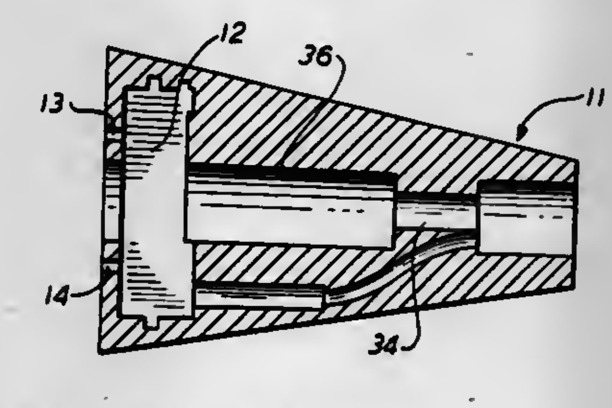

1. A fused plug comprising,
(a) a housing of dielectric material,
(b) a hollow portion in the housing defining a passage for electric conductors and a means for holding a fuse,
(c) an interior cavity in the housing for a prong holder at the other end of the housing dimensioned to closely receive and hold a prong holder,
(d) a rigid prong holder in the prong holder cavity,
(e) a pair of prong slots in the housing adjacent to the rigid prong holder,
(f) a pair of prong slots in the prong holder,
(g) a pair of prongs extending through the slots in the rigid prong holder and in the housing,
(h) offset portions of the prongs engaged with the rigid prong holder,
(i) an axial opening in the housing,
(j) an axial opening in the rigid prong holder in registration with the opening in the housing and defining a fuse insertion passage positioned between the prongs,
(k) a fuse socket holder,
(l) bifurcated end portions of the fuse socket holder engaged with the rigid prong holder at one end and attached to the prong at the other end of the rigid prong holder,
(m) a fuse socket attached to the fuse socket holder at the fuse passage,
(n) the fuse socket having an internal thread,
(o) a threaded plug for engagement with the fuse socket holder,
(p) a portion of the plug electrically conductive at the threaded engagement portion,
(q) a tubular socket opposite to the plug,
(r) a first electric conductor connected to the tubular socket,
(s) a second electric conductor in the housing connected to the second prong,
(t) a fuse engaged at one end with the electrically conductive portion of the plug and at the opposite end with the tubular socket.

4,300,114
MANUALLY ADJUSTABLE RESISTOR DEVICE
John J. Sheridan, Middletown, and Willis H. Anderson, Anderson, both of Ind., assignors to General Motors Corporation, Detroit, Mich.
Filed Jan. 23, 1980, Ser. No. 114,709
Int. Cl.³ H01C *10/36*
U.S. Cl. 338—172 **4 Claims**

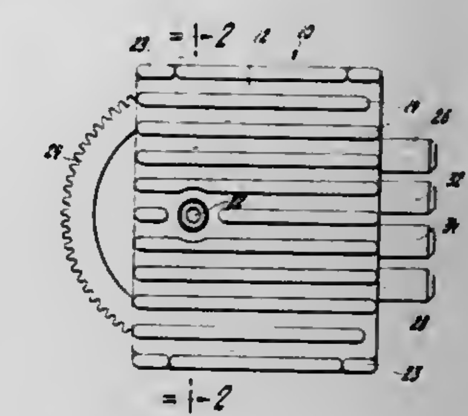

1. A manually adjustable variable resistance control device comprising
a housing including an insulating substrate and a mating cover defining a space therebetween,
a thumbwheel in the said space pivoted to the housing and partially extending outside the housing for manual rotation,
a pair of electrical terminals embedded in the cover each having at one end a connector portion extending outside the housing and at the other end a terminal surface portion exposed at the inner surface of the cover,
a resistor circuit comprising a printed resistor pattern on the inner surface of the substrate, and
a pair of contactors each carried by the thumbwheel and extending from opposite sides thereof in slidably contacting engagement with one of the terminal surface portions and a selected portion of the resistor circuit to bridge the terminal surface portions and the resistor circuit so that the resistance across the electrical terminals depends upon the manually adjusted position of the thumbwheel.

4,300,115
MULTILAYER VIA RESISTORS
Joseph L. Ansell, Gaithersburg, and Raymond J. Baker, Beltsville, both of Md., assignors to The United States of America as represented by the Secretary of the Army, Washington, D.C.
Filed Jun. 2, 1980, Ser. No. 155,713
Int. Cl.³ H01C *1/012*
U.S. Cl. 338—314 **1 Claim**

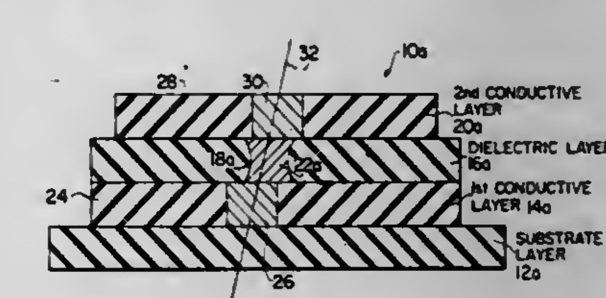

1. In a multi-layer circuit structure having first and second layers separated by a non-conducting layer, the improvement comprising,
a first conductor portion associated with said first layer and a second conductor portion associated with said second layer,
an aperture means formed in said non-conducting layer, and

resistive material located in said aperture means,
said first and second conductor portions being positioned adjacent opposite portions of said resistive material and partially overlapping opposite portions of said aperture means,
whereby an electrically conductive path is established between said first and second conductor portions, and the resistance of said path is dependent upon the extent of overlap of said conductor portions with said aperture means and resistive material.

4,300,116

SAFETY METHOD AND APPARATUS FOR SENSING THE PRESENCE OF INDIVIDUALS ADJACENT A VEHICLE

Joseph L. Stahovec, 35 Brundage St., Springdale, Conn. 06907
Filed Dec. 13, 1979, Ser. No. 103,412
Int. Cl.³ G08G *1/01;* **G08B** *13/26;* **H01Q** *1/32*
U.S. Cl. 340—32 **20 Claims**

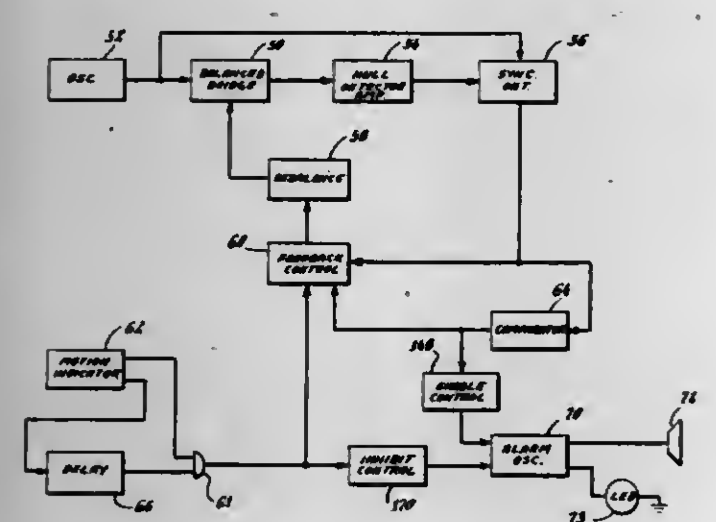

1. A method for detecting the proximity of an individual to a vehicle, said vehicle having a detector including a balanced bridge circuit, said bridge circuit including a capacitor formed between earth ground and an electrode which is mounted to the exterior of the vehicle, the method comprising the steps are:
(a) establishing an electric field between the electrode and earth ground in an area exterior to the vehicle;
(b) automatically sensing bridge circuit unbalance and generating an electrical signal indicative of unbalance;
(c) rebalancing the bridge circuit upon occurrence of said signal at a first rate when the vehicle is in motion;
(d) varying, from the first rate, the rate at which the bridge circuit is rebalanced when the vehicle is stationary;
(e) detecting a change in a capacitance C_d existing between the electrode and earth ground caused by the entry of a body into the field exterior to the vehicle when the vehicle is stationary;
(f) generating a sensory indication when the bridge circuit becomes unbalanced upon entry of a body into the external field when the vehicle is stationary; and,
(g) restoring the rate of rebalancing of the bridge circuit to said first rate as the vehicle proceeds in motion.

4,300,117

ALARM DEVICE FOR AN ODOMETER

Hirokazu Horii, Ooi, and Koji Sasai, Yokohama, both of Japan, assignors to Nissan Motor Company, Limited, Kanagawa, Japan
Filed Nov. 27, 1979, Ser. No. 97,633
Claims priority, application Japan, Dec. 29, 1978, 53-178877[U]
Int. Cl.³ B60Q *1/00;* **G01C** *22/00;* **G06F** *15/18*
U.S. Cl. 340—52 D **9 Claims**

1. In a vehicle odometer comprising a frame, two parallel shafts, supported by the frame, a plurality of distance-indicating wheels mounted on one of the shafts, and a plurality of carry pinions mounted on the other shaft, which actuate the distance-indicating wheels, an alarm device including:
triggering means which rotates together with one of said carry pinions, said triggering means being integrally formed on a boss part of said carry pinion,
a bracket fixed to the frame of the odometer;
a leaf spring having one end thereof fixed to said bracket,

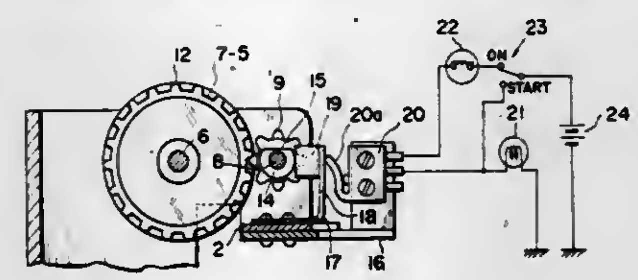

and a second end thereof having a protruding portion adapted to engage said boss part of said carry pinion and said triggering means by the biasing force of said leaf spring; and
a switch means fixed to the bracket, an actuating portion of said switch means extending toward the second end of said leaf spring and adapted to be normally depressed by said leaf spring at all times except when said triggering means engages said protruding portion at the second end of said leaf spring.

4,300,118

TIRE INNER PRESSURE DROP ALARMING SERVICE

Akira Matsuda, Higashimurayama; Norio Goshima, Musashino; Shigeo Yasuda, Musashino; Motoaki Iwasaki, Musashino, and Hiroshi Nishino, Musashino, all of Japan, assignors to Bridgestone Tire Company Limited and Mitaka Instrument Company Limited, both of Tokyo, Japan
Filed Feb. 15, 1979, Ser. No. 12,481
Claims priority, application Japan, Feb. 28, 1978, 53-24885[U]; Jun. 19, 1978, 53-73921
Int. Cl.³ B60C *23/02*
U.S. Cl. 340—58 **4 Claims**

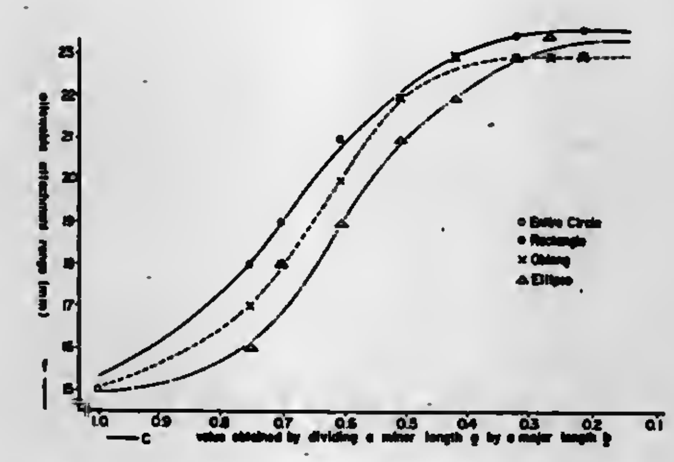

1. A tire inner pressure drop alarming device for transforming an abnormal pressure drop of a tire into an electric signal to alarm a driver, which comprises:
an oscillation section mounted on a vehicle body in the vicinity of a vehicle wheel and including an oscillation coil and an oscillating capacitor, the oscillation state of radial magnetic energy in said oscillation coil changing in response to said abnormal pressure drop;
a resonance section mounted on a peripheral portion of said vehicle wheel in the vicinity of said oscillation coil, and including a resonance coil resonating said magnetic energy generated from said oscillation coil, a resonating capacitor and a pressure detecting switch in response to the abnormal pressure drop of said tire, said resonance coil having an elongated cross-section disposed in a plane perpendicular to magnetic lines of force between said resonance coil and oscillation coil generated when said resonance coil is brought into face-to-face relation with said oscillation coil and parallel with a plane separating said resonance coil and said oscillation coil, said cross-section having a major length, measured in the rotational direction of said resonance coil rotated together with said vehicle wheel, longer than a minor length measured in the direction perpendicular to said rotational direction of said resonance coil with a value obtained by dividing said minor length by said major length being no less than 0.2 and less than 1.0;
a signal processing and alarming section mounted on said vehicle body in spaced relation with said vehicle wheel, and including an oscillation circuit cooperating with said oscillation section for effecting an oscillating action by radiating said magnetic energy from said oscillation section to change said oscillation state in cooperation with said oscillation section in response to said abnormal pressure drop, a detecting circuit detecting an output of said oscillation circuit, a comparison circuit for comparing the output of said detecting circuit with a standard signal to generate a plurality of output pulses, an integration circuit for integrating said output pulses of said comparison circuit, a logical circuit for logically calculating an output generated from said integration circuit, an alarming means for emitting an alarm with an output generated from said logical circuit, and a power source switch; and
a coaxial cable connecting said oscillation section and signal processing and alarming section.

4,300,119

POWER GENERATOR FOR TELEMETRY TRANSMITTER

Michael V. Wiernicki, Trumansburg, N.Y., assignor to Facet Enterprises, Inc., Tulsa, Okla.
Filed Sep. 6, 1979, Ser. No. 72,877
Int. Cl.³ B60C *23/02, 23/20;* **G01P** *3/481, 3/488*
U.S. Cl. 340—58 **15 Claims**

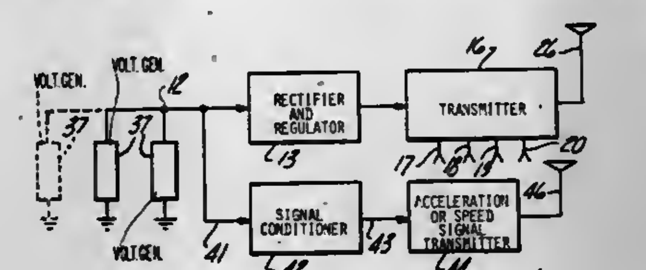

1. A system for providing a biasing voltage to an electronic apparatus mounted inside a pneumatic tire independently of couplings outside said pneumatic tire comprising:
signal generation means, fixedly attached to an internal surface of the pneumatic tire for generating an output voltage each time said pneumatic tire is flexed in the immediate vicinity of said signal generator means;
means for receiving said output voltage and converting said voltage to a direct current voltage;
transmitter means responsive to said direct current voltage for generating an output signal;
at least one transducer means for detecting at least one tire condition parameter to provide at least one measured parameter signal to said transmitter means for transmitting said measured parameter signal as said output signal; and
antenna means operatively associated with said transmitter means to transmit said output signal.

4,300,120

TIRE PRESSURE MONITOR

James J. Surman, Utica, Mich., assignor to Eaton Corporation, Cleveland, Ohio
Filed Nov. 13, 1978, Ser. No. 959,553
Int. Cl.³ B60C *23/04*
U.S. Cl. 340—58 **2 Claims**

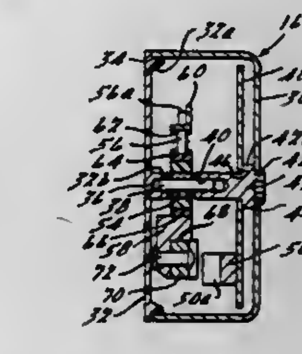

1. In a vehicle having a plurality of pneumatic tires, a tire pressure monitor comprising:
generator means associated with each tire, each said generator means including first and second members, said first member mounted for rotation with an associated wheel and defining an axis of rotation, said second member mounted for rotation relative to said first member about said axis and including a center of gravity displaced from said axis, said generator means further including an inductor carried by said first member and a permanent magnet carried by said second member, said inductor and magnet being coextensively displaced from said axis to effect periodic alignment therebetween and a resulting electrical potential within said inductor during said relative rotation;
transmitter means associated with each generator means, each transmitter means operative to receive the electrical potential from the generator means associated therewith, each said transmitter means being further operative to generate a low tire condition signal when the fluid pressure within the tire associated therewith falls below a predetermined value; and
receiver means disposed remotely from said transmitter means and operative to receive said low tire condition signals and to generate an alarm signal as a function thereof.

4,300,121

WARNING SYSTEM FOR TRAFFIC ROUTES AT AN AVALANCHE DANGER HILLSIDE

Wilfried Fritzsche, No. 34, Eissendorfer Strasse, 2100 Hamburg 90, Fed. Rep. of Germany
Filed Apr. 6, 1979, Ser. No. 27,647
Claims priority, application Fed. Rep. of Germany, Apr. 12, 1978, 2815773
Int. Cl.³ G08G *1/00, 1/07;* **G11S** *13/95;* **G01W** *1/00*
U.S. Cl. 340—22 **6 Claims**

1. A warning system for detecting and indicating a snow avalanche occurring on a hillside comprising
at least one radar transmitter directed so as to illuminate an area of said hillside under surveillance;
at least one radar receiver directed toward said area of said hillside for receiving reflected wave signals of said radar transmitter;
storage means connected to the output of said radar receiver for storing said received signals so as to determine stable conditions on said hillside;
comparing means coupled to the output of said radar receiver and said storage means for detecting a difference

between subsequently received signals and the signals in said storage means; and

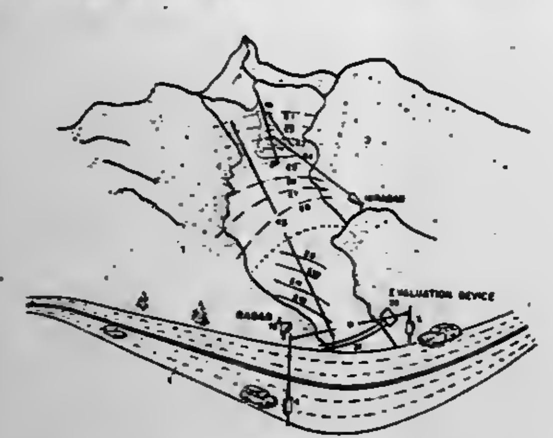

indicator means coupled to the output of said comparing means.

4,300,122

APPARATUS FOR PROCESSING DIGITAL DATA REPRESENTATIVE OF A TWO-DIMENSIONAL IMAGE

Donald H. McMahon, Carlisle, Mass., assignor to Sperry Corporation, New York, N.Y.

Filed Apr. 2, 1979, Ser. No. 25,702

Int. Cl.[3] G06K *9/56*

U.S. Cl. 340—146.3 MA **14 Claims**

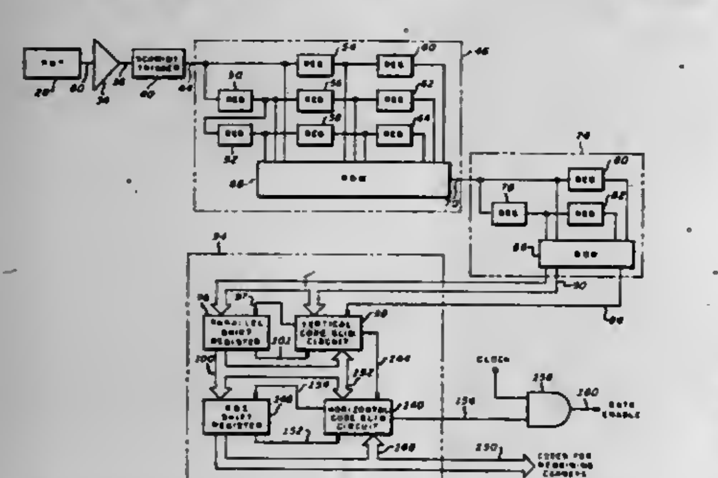

1. An apparatus for converting binary data representative of data squares in a two dimensional array to a corner code data format, comprising:

coding means coupled to receive said binary data for providing a multiplicity of corner codes each indicative of one corner feature of a multiplicity of corner features in said two dimensional array, said corner features defined in complementary pairs; and

excess code elimination means coupled to receive said corner code data for eliminating corner codes corresponding to horizontally adjacent and vertically adjacent complementary corner features and for providing at an output means remaining corner codes.

4,300,123

OPTICAL READING SYSTEM

John V. McMillin, and Dale W. Schroeder, both of Iowa City, Iowa, assignors to Westinghouse Electric Corp., Pittsburgh, Pa.

Filed Jan. 2, 1979, Ser. No. 457

Int. Cl.[3] G06K *7/14*

U.S. Cl. 340—146.3 Z **12 Claims**

1. An optical reader apparatus for the line-by-line reading of information from a document, comprising:

a line scan video camera means including a line array of a plurality of photosensitive elements for scanning successive lines of document and developing an analog video output signal corresponding to the document information present on each scan line, said analog video output signal of each scan line consisting of a plurality of signal elements, each corresponding to a scan point of the document corresponding to one of said photosensitive elements,

analog-to-digital converter means connected to said line scan video camera to convert the analog video output signal into a digital signal comprised of signal elements corresponding to the plurality of scan points of the scan line,

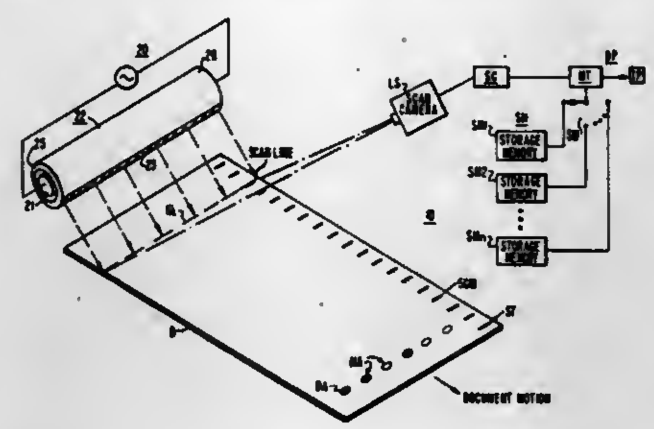

a plurality of selectable document formats, each defining a specific pattern of document mark areas or locations of interest,

means for selecting one of said plurality of selectable document formats, and

digital information processing means including a mark area totalizer means operatively connected to said analog-to-digital converter means and responsive to a selected document format for totalizing the signal elements of said digital signal corresponding to scan points within the respective mark areas or locations defined by the selected document format.

4,300,124

METHOD OF PROTECTING AN AREA AND CONTROL SYSTEM FOR WATCHMAN TOURS

Tulio Vasquez, Cra 15 No. 39-27, Bogota, Colombia

Filed Jan. 24, 1980, Ser. No. 115,138

Int. Cl.[3] G07C *1/20*

U.S. Cl. 340—306 **9 Claims**

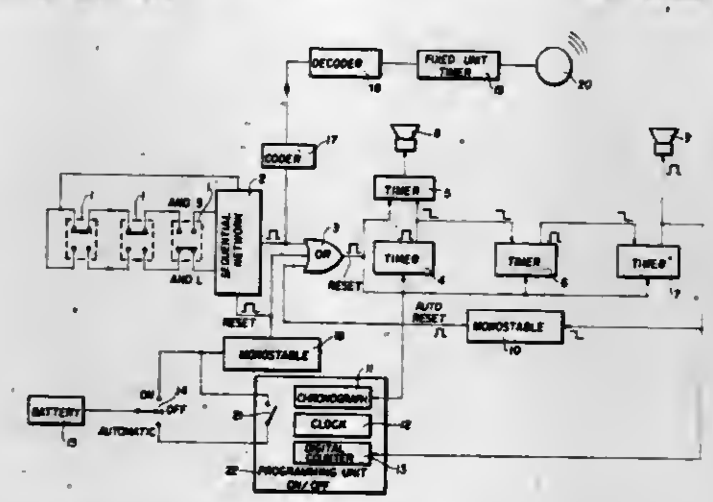

1. An alarm apparatus comprising:

a plurality of fixed control keys with different combinations therebetween;

a portable control unit having a plurality of key selector switches, said selector switches being equal in number to said plurality of fixed keys and each respective one of said fixed keys corresponding to a corresponding respective one of said selectro switches;

a central unit having control means and alarm means operatively associated therewith to provide an alarm if an appropriate signal is not received within predetermined time period; and

control devices in said portable control unit which cooperate with said control means in said central unit for triggering an alarm in said portable control unit and then said alarm means in said central unit, if said appropriate signal is not produced in said portable unit within a predetermined time period, said devices in said portable unit including a signalling device which provides the appropiated signal to said portable unit and to said central control unit only when all of said fixed keys have changed all the said selector switches to a given position.

4,300,125

SYSTEM FOR MONITORING, TRANSMITTING AND CONDITIONING OF INFORMATION GATHERED AT SELECTED LOCATIONS

Clement T. Loshing, 17836 Lake Rd., Lakewood, Ohio 44107, and Ralph J. Thompson, 2399 W. Sprague Rd., Broadview Heights, Ohio 44147

Filed Jun. 1, 1979, Ser. No. 44,686

Int. Cl.[3] G01R *21/00;* **H03D** *3/06*

U.S. Cl. 340—310 A **19 Claims**

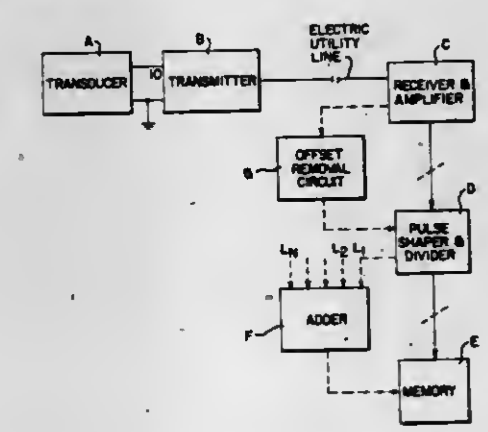

1. Apparatus for recording information at a first location related to a quantity measured at a second location comprising:

(a) a receiver at said first location for receiving a signal;

(b) a signal processor having pulse shaping means, first divider means and coupling means;

(c) a source of alternating current of constant frequency available at said first location and said second location;

(d) recording means for recording said information and reference information based on said alternating current constant frequency;

(e) a transducer at said second location adapted to measure a quantity; and

(f) a transmitter at said second location, said transmitter having an input connected to said transducer, a converter having an output signal with a frequency proportional to the quantity measured by said transducer plus a preselected offset frequency equal to said alternating current constant frequency.

4,300,126

METHOD AND APPARATUS, FOR POWER LINE COMMUNICATIONS USING ZERO CROSSING LOAD INTERRUPTION

Jagdishchandra T. Gajjar, Clifton Park, N.Y., assignor to General Electric Co., Schenectady, N.Y.

Filed Apr. 11, 1980, Ser. No. 139,437

Int. Cl.[3] H04B *3/54*

U.S. Cl. 340—310 A **14 Claims**

1. Apparatus for use in a power line carrier communications system having at least one load connected through a transformer to a power distribution network having a periodic network waveform voltage thereon, comprising:

at least one means for selectively interrupting current flow to an associated power-consuming load, responsive to an interruption signal;

means for detecting zero crossing of the network waveform voltage to provide an output signal to said interrupting means as said interruption signal to cause said interrupting means to interrupt current flow to said associated load for a time interval of predetermined duration in the vacinity of each network waveform zero crossing;

communications means associated with at least one of said at least one load for transmitting and/or receiving power

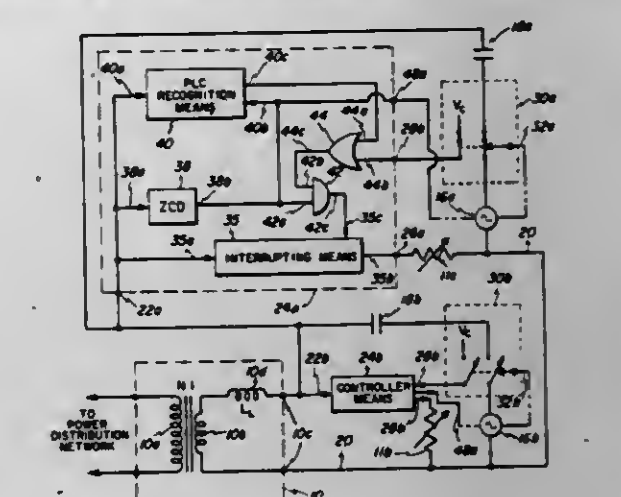

line carrier communications signals to and/or from said network when said interrupting means has interrupted current flow to said associated load; and

an impedance element connected in series between said communications means and said transformer, said impedance element having a reactance selected to neutralize at least a portion of the leakage inductive reactance of said transformer to which said element is connected, at the carrier frequency of said power line communications signal.

4,300,127

SOLID STATE NONCONTACTING KEYBOARD EMPLOYING A DIFFERENTIAL TRANSFORMER ELEMENT

Victor M. Bernin, 105 E. Berkshire La., Mt. Prospect, Ill. 60056

Filed Sep. 27, 1978, Ser. No. 946,346

Int. Cl.[3] G06F *3/02*

U.S. Cl. 340—365 L **12 Claims**

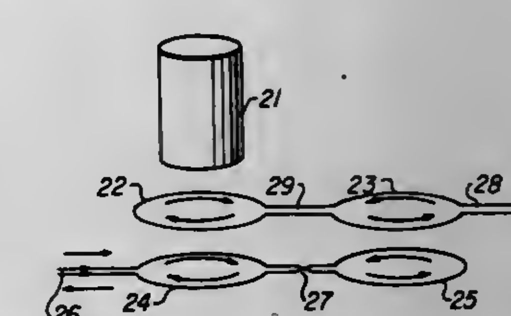

1. A differential transformer switch comprising two primary windings which lie in a first plane and two secondary windings which lie in a second plane parallel and in close proximity to said first plane, said windings being positioned such that each primary winding is opposite to and aligned with one of said secondary windings to define first and second primary-secondary winding pairs, said primary windings being interconnected in said first plane and said secondary windings being interconnected in said second plane to form a differential transformer configuration wherein the output signal voltage from the interconnected secondary windings represents the difference in the magnetic coupling between said first and second primary-secondary winding pairs and a mutual inductance changing

member which is movable from a position outside a common winding bore defined by one of said primary-secondary winding pairs to a position within said bore to effect a change in mutual inductance and hence the coupling of said one of said primary-secondary winding pairs with a resulting change in the balance of the differential transformer and the signals coupled by the primary-secondary winding pairs which signifies a switching operation.

4,300,128
MOTOR ACTUATED BELL
Tadashi Ishii, Kunitachi, Japan, assignor to Kobishi Electric Co., Ltd., Tokyo, Japan
Filed Sep. 8, 1980, Ser. No. 185,316
Int. Cl.³ G10K *1/065*
U.S. Cl. 340—392 7 Claims

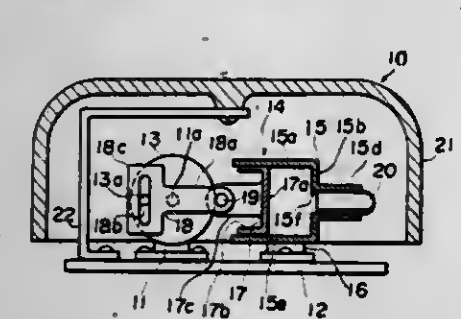

1. A motor actuated bell comprising:
(a) a base;
(b) a gong mounted on said base;
(c) a motor mounted on said base and having a rotatable drive shaft;
(d) a pneumatic actuator mounted on said base;
(e) a transmission means connected between said motor drive shaft and said pneumatic actuator; and
(f) a hammer operatively associated with said pneumatic actuator for being moved into striking contact with said gong.

4,300,129
SILENT WEARABLE SIGNALLING DEVICE WITH TACTILE MEANS TO PREVENT FALSE TRIGGERING
Thomas R. Cataldo, 5169 Princess Ann Rd., La Canada, Calif. 91001
Filed Sep. 6, 1978, Ser. No. 940,125
Int. Cl.³ G08B *1/08;* H04Q *7/00*
U.S. Cl. 340—539 14 Claims

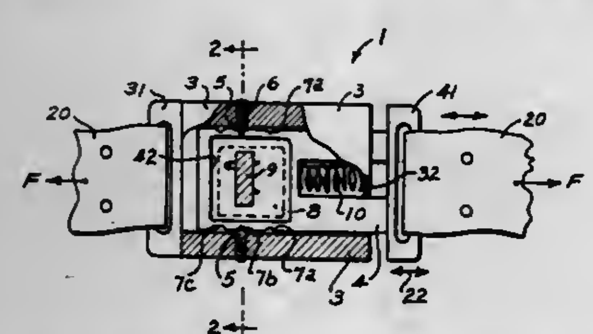

1. A secret signaling device adapted to be carried on the body of a human operator, and built as a generally compact rigid unitary assembly, comprising:
a base element;
a movable element disposed for displacement relative to said base element by a force exerted by such operator;
transmitting means with battery means to secretly transmit a signal;
switch means operably connected mechanically between said base and movable elements and connected to activate said transmitting means;
a series of detent means including a detent follower and being mechanically connected between said base and movable elements and associated with said switch means and adapted additionally to produce transient reaction forces felt by said operator upon engagement and disengagement to provide him with concealed information of such engagement and disengagement through his tactile sense, and
return spring means connected between said base and movable elements and having a spring rate sufficient to disengage at least some of said engagements of said detent means;
at least one of said series of detent means being disposed to engage and disengage before the operation of said switch means to tactilly inform said operator of the approach of activation of said transmitting means.

4,300,130
ANTI-THEFT ALARM CIRCUIT AND COMPATIBLE WARNING PLUGS
Robert K. Fotheringham, 3863 Steilacoom Blvd. S.W., and Glen E. Spleth, 5928 Steilacoom Blvd. S.W., both of Tacoma, Wash. 98499
Filed Oct. 29, 1979, Ser. No. 89,193
Int. Cl.³ G08B *13/02*
U.S. Cl. 340—568 5 Claims

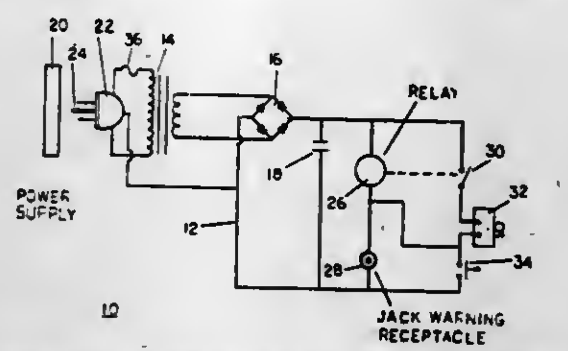

1. A warning plug for use in connection with an alarm system for indicating the disconnection of a stereo or appliance from the warning plug comprising:
an electrically conductive housing;
a center connector positioned and secured within the housing;
an electrically conductive rotatable prong secured to the housing, the rotatable prong biased such that when there is nothing in the path of the rotatable prong the rotatable prong will come into contact with the center connector;
a wire connected to the center connector;
a wire connected to the electrically conductive housing; and
a means of connecting the warning plug to the appliance or stereo such that when the warning plug is connected the rotatable prong is prevented from connection with the center conductor.

4,300,131
DEVICE FOR INDICATING AN ABNORMAL CONDITION IN AN ULTRASONIC NEBULIZER
Sadao Mitsui, Chiba; Minoru Takahashi, Funabashi, and Keiichi Watanabe, Ichikawa, all of Japan, assignors to TDK Electronics Co, Ltd., Tokyo, Japan
Filed Jul. 11, 1979, Ser. No. 56,625
Claims priority, application Japan, Dec. 26, 1978, 53-176714[U]
Int. Cl.³ G08B *21/00*
U.S. Cl. 340—618 4 Claims

1. In a device for sensing an abnormal condition in an ultrasonic nebulizer that includes a container for storing a liquid, a transducer located generally at the bottom of said container to apply an ultrasonic wave to the liquid to nebulize the same, an oscillator for exciting said transducer, a switch whose condition is responsive to the level of the liquid in the container, a circuit coupled to said switch for controlling oscillation in the oscillator in response to the condition of said switch so that

oscillation is terminated when the liquid level in the container falls below a predetermined level, and an alarm also coupled to said switch and activated when oscillation is terminated by said circuit, the improvement wherein said switch is a 2-terminal switching device in which the two terminals thereof are connected when said switch is closed and are disconnected when said switch is opened, one of the two switch terminals being coupled to said oscillator and the other switch terminal being coupled to both a source of biasing potential and to said alarm so that, when said switch is closed, said biasing potential is applied to said oscillator and said other switch terminal is concomitantly at a low level potential insufficient to activate said alarm, and when said switch is opened said biasing potential is removed from said oscillator concomitantly to raise the potential of said other switch terminal to a higher level potential sufficient to activate said alarm.

4,300,132
FIRE ALARM SYSTEM
Takeo Arima, Tokyo, and Akira Furuyama, Machida, both of Japan, assignors to Hochiki Corporation, Tokyo, Japan
Filed Feb. 2, 1979, Ser. No. 8,809
Claims priority, application Japan, Feb. 3, 1978, 53-11311; Feb. 3, 1978, 53-11312
Int. Cl.³ G08B *17/10;* H03K *3/281*
U.S. Cl. 340—629 32 Claims

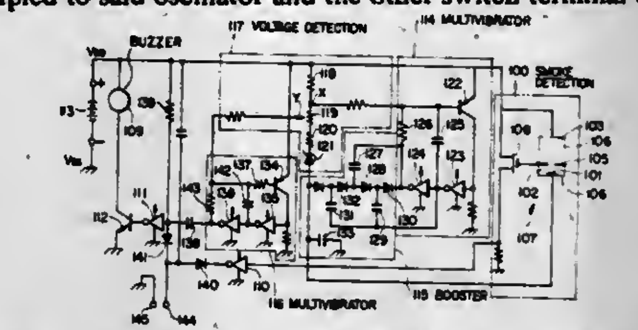

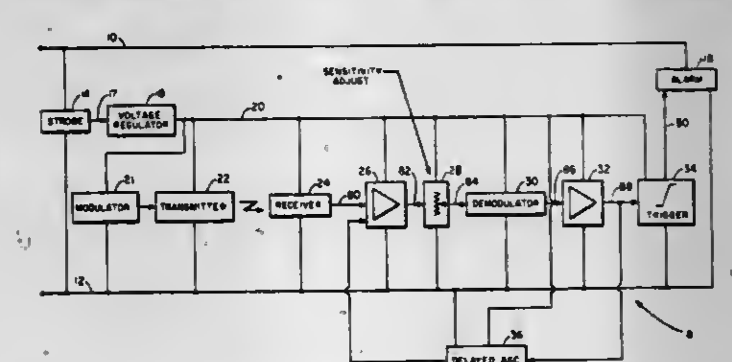

1. A multivibrator comprising first and second C-MOS inverters each having an inverting threshold level and having respective input and output terminals, said C-MOS inverters being parallel-connected to a DC electric source; a capacitor; a first resistor; and a series circuit comprising a transistor and a second resistor, said series circuit connected in parallel with said electric source and having a voltage Va at a node common to said transistor and said second resistor, the input terminal of said first C-MOS inverter being connected to said node common to said transistor and said second resistor, the output terminal of said first C-MOS inverter being connected to the input terminal of said second C-MOS inverter, the output terminal of said second C-MOS inverter being connected through said first resistor and said capacitor, to its input terminal, the connection point of said capacitor and said first resistor being connected to the base of said transistor, wherein said transistor causes said voltage Va to cross said inverting threshold level substantially instantaneously.

4. In an alarm system having an alarm device including a sensor for detecting a condition, a D.C. power source, a warning system for providing an indication of the condition detected and a switching circuit for actuating said warning system upon reception of an output signal from said sensor, the improvement comprising, means for providing a high voltage from said power source to said sensor, said means comprising a multivibrator having first and second C-MOS inverters each having an inverting threshold level and having respective input and output terminals, said C-MOS inverters being parallel-connected to said DC electric source; a capacitor; a first resistor; and a series circuit comprising a transistor and a second resistor, said series circuit connected in parallel with said electric source and having a voltage Va at a node common to said transistor and said second resistor, the input terminal of said first C-MOS inverter being connected to said node common to said transistor and said second resistor, the output terminal of said first C-MOS inverter being connected to the input terminal of said second C-MOS inverter, the output terminal of said second C-MOS inverter being connected through said first resistor and said capacitor, to its input terminal, the connection point of said capacitor and said first resistor being connected to the base of said transistor, wherein said transistor causes said voltage Va to cross said inverting threshold level substantially instantaneously.

4,300,133
SMOKE DETECTOR
Elias E. Solomon, 20 Christina Ct., Duxbury, Mass. 02332
Continuation-in-part of Ser. No. 782,002, Mar. 28, 1977, abandoned, which is a continuation-in-part of Ser. No. 738,750, Nov. 4, 1976, Pat. No. 4,121,110, which is a continuation-in-part of Ser. No. 725,036, Sep. 20, 1976, Pat. No. 4,126,790. This application Mar. 1, 1979, Ser. No. 16,297
Int. Cl.³ G08B *17/10*
U.S. Cl. 340—630 16 Claims

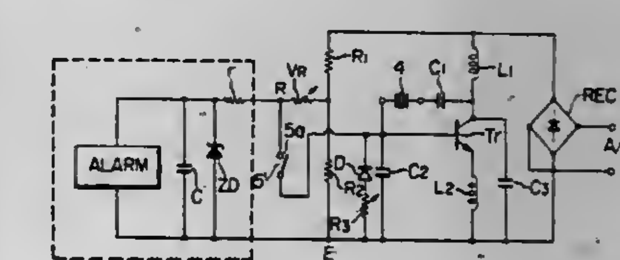

1. A smoke detector for detecting a product of combustion within a detection chamber that receives air from outside the detector and that has a radiant energy source, and receiver means including a radiant energy transducer, the improvement comprising automatic gain control circuit means for sensing relatively slow changes in a signal level to compensate bidirectionally for variations from a quiescent signal level to prevent false triggering of the detector, said receiver means having means defining a first node from which the signal level is taken and a second node that is to be controlled, said automatic gain control circuit means coupled between said first and second nodes for providing a delayed form of control, said automatic gain control circuit means comprising a semiconductor control device for controlling said second node voltage and input circuit means including delay means coupled from said first node, said delay means providing a predetermined delay of signals from the first to second node.

4,300,134
AUTOMATIC RESETTING ANTI 2-BLOCK CRANE WARNING SYSTEM
Raymond M. Paciorek, Downers Grove, Ill., assignor to Eaton Corporation, Cleveland, Ohio
Filed Dec. 20, 1979, Ser. No. 105,684
Int. Cl.³ G08B *21/00*
U.S. Cl. 340—685 13 Claims

1. A detector assembly comprising:
a. processing means adapted to receive a two state sensed condition input signal and an override input signal and

operable to provide first and second control signals and NORMAL, 2-BLOCK, and OVERRIDE state signals in response thereto; and
b. indicator means connected to said processing means and capable of indicating three distinct states in response to said NORMAL, 2-BLOCK, and OVERRIDE state signals,
wherein said processing means is operable to provide said NORMAL state signal to said indicator means and to provide said first control signal upon receipt of a first sensed condition

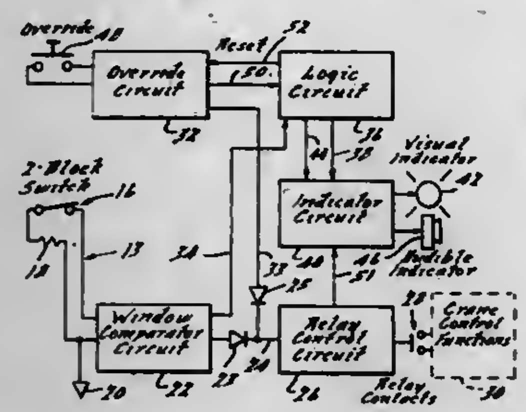

input signal and in the absence of an override input signal, said processing means is operable to provide said 2-BLOCK state signal to said indicator means and to provide said second control signal upon receipt of a second sensed condition input signal and in the absence of an override input signal, said processing means is further operable to provide said OVERRIDE state signal to said indicator means and to provide said first control signal upon receipt of either of said sensed condition input signals and in the presence of said override input signal.

4,300,135
SEISMIC ALARM SYSTEM
Lawrence D. Korn, 17615 Adrian Rd., Southfield, Mich. 48075; Erik D. Goodman, 101 Rampart Way, E. Lansing, Mich. 48823, and Charles R. MacCluer, 9970 Winegar, Laingsburg, Mich. 48848
Filed Jun. 21, 1979, Ser. No. 50,671
Int. Cl.³ G08B *21/00;* G01V *1/18*
U.S. Cl. 340—690 17 Claims

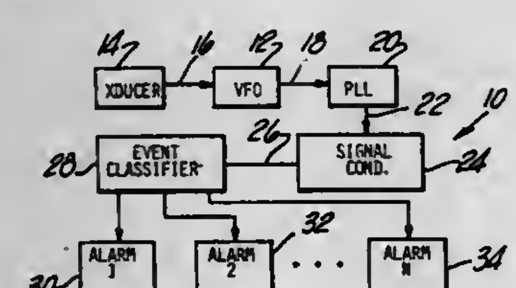

1. A seismic alarm system comprising:
means for detecting a seismic tremor;
means responsive to said detecting means for generating a signal proportional to the magnitude of the tremor;
means for selectively activating one of at least two alarm means in dependence upon the magnitude of said signal and
wherein said signal generating means comprises an oscillator having an output connected to an input of a phase locked loop circuit means, said phase locked loop circuit means having an error voltage output the magnitude of which is proportional to the instantaneous frequency deviation of the input signal but substantially unaffected by long term frequency variations of the input signal to the phase locked loop circuit means and wherein said detecting means comprises means for varying the frequency of the oscillator proportionately with the magnitude of the seismic tremor.

4,300,136
DISPLAY PATTERN PREPARING SYSTEM
Hideo Tsuiki; Yoshiyasu Kikuchi; Hiroshi Kirii, and Koji Nakamura, all of Tokyo, Japan, assignors to Nippon Electric Co., Ltd., Tokyo, Japan
Filed May 8, 1980, Ser. No. 147,976
Claims priority, application Japan, May 10, 1979, 54-57268; Sep. 28, 1979, 54-124979; Oct. 1, 1979, 54-126672
Int. Cl.³ G06F *3/153*
U.S. Cl. 340—747 13 Claims

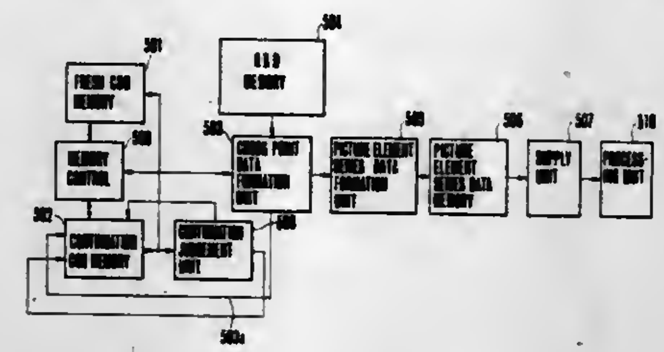

1. A display pattern preparing system comprising:
a fixed pattern memory storing, as a registered configuration data, the length of a segment by which a fixed pattern of a prescribed configuration and area crosses a scanning line in the primary direction of scanning;
an analogous pattern memory storing, as parameters, a reference position data representative of a reference point for a portion of an analogous pattern through which the analogous pattern overlaps the scanning line, said analogous pattern being defined as a pattern whose configuration is analogously variable, a distance data representative of the length of said portion of the analogous pattern, and a height data representative of a width of the analogous pattern in the auxiliary direction of scanning;
means for reading out said data from said fixed pattern memory and said analogous pattern memory,
means for preparing a position data for display of a pattern designated by the read-out data; and
means for transmitting said position data to a display unit.

4,300,137
MATRIX DRIVING METHOD FOR ELECTRO-OPTICAL DISPLAY DEVICE
Hiroo Fujita, Sayama; Akira Tsuzuki, Tokyo, and Shigeru Morokawa, Higashiyamato, all of Japan, assignors to Citizen Watch Company Limited, Tokyo, Japan
Continuation-in-part of Ser. No. 784,746, Apr. 5, 1977, abandoned. This application Jul. 13, 1979, Ser. No. 57,461
Claims priority, application Japan, Apr. 6, 1976, 51/38536
Int. Cl.³ G08B *5/36*
U.S. Cl. 340—765 4 Claims

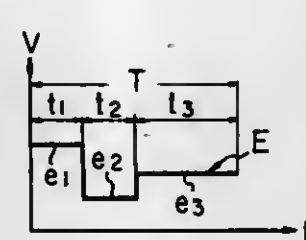

1. A method of cyclically driving a liquid crystal display device having a matrix array of a first and second digit electrodes and a plurality of segment electrodes associated with said digit electrodes, respectively, to define a plurality of display elements, comprising the steps of:
applying first and second digit drive signals to said first and second digit electrodes, respectively; and
applying at least one of first, second and third segment drive signals to each of said plurality of segment electrodes, with the first segment drive signal inducing a state of non-display at said display elements on all of said digit electrodes during a half cycle period, the second segment drive signal inducing a state of display at said display elements on all of said digit electrodes during said half cycle period, and the third segment drive signal inducing a state of display at said display elements on one of said digit electrodes during said half cycle period;
said first and second digit drive signals having first and second voltage potentials, respectively, during a first time interval of said half cycle period and having a third voltage potential serving as a reference potential during a second time interval of said half cycle period, said reference potential taking a value intermediate between said first and second voltage potentials, with a voltage difference between said first voltage potential of said first digit drive signal and said reference voltage potential being equal to that between said second voltage potential of said second digit drive signal during said first time interval and said first voltage potential of said digit drive signal being opposite in polarity to said second voltage potential of said second digit drive signal during said first time interval of said half cycle period;
wherein said first segment drive signal has a potential level equal to said reference potential during said first and second time intervals, said second segment drive signal has the same potential as said reference potential during said first time interval and a fourth voltage potential larger in amplitude level than said first and second voltage potentials during said second time interval, and said third segment drive signal has at least one of said fourth voltage potential and a fifth voltage potential lower in amplitude level than said first and second voltage potentials during said first time interval and a voltage potential equal to said reference voltage potential during said second time interval.

4,300,138
ELECTRIC MEMORY DETECTOR IN AN ECD DRIVER
Hiroshi Nakauchi, Nara; Katubumi Koyanagi, Tenri; Hiroaki Kato, Tenri; Yutaka Takafuji, Tenri; Yasuhiko Inami, Tenri, and Hisashi Uede, Yamatokoriyama, all of Japan, assignors to Sharp Kabushiki Kaisha, Osaka, Japan
Continuation of Ser. No. 859,757, Dec. 12, 1977, abandoned. This application Nov. 9, 1979, Ser. No. 92,672
Claims priority, application Japan, Dec. 17, 1976, 51-154768; Feb. 25, 1977, 52-20494
Int. Cl.³ G09F *7/32;* G06F *3/14*
U.S. Cl. 340—785 3 Claims

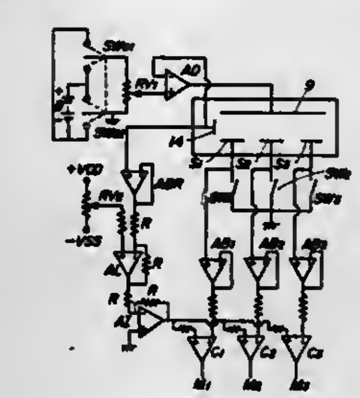

1. A driver circuit means for driving an electrochromic display including a plurality of segment electrodes and a reference electrode and an electrochromic material interposed therebetween, said segment electrodes being capable of being colored or bleached, the electrodes developing counter electromotive forces thereon, the said counter electromotive forces on said segment electrodes being characteristic of the colored or bleached state thereof, and the said counter electromotive forces developed between the surface of the electrochromic material and the respective surfaces of said electrodes, said driver circuit means comprising:
first determining means associated with each of said segment electrodes for determining the counter electromotive force developed at each of the segment electrodes and for developing a respective plurality of output signals representative thereof:
means for developing a predetermined sequence of control signals;
a plurality of bidirectional switch means responsive in said predetermined sequence to said control signals for interconnecting said segment electrodes in said predetermined sequence with said first determining means to provide a said predetermined sequence of output signals representative, respectively, of the states of said segment electrodes;
second determining means for determining the counter electromotive force developed at said reference electrode and developing output signals in accordance therewith; and
state signal generation means responsive to said output signals from said first and second determining means for providing a said predetermined sequence of state signals indicative, respectively, of whether said segment electrodes are in the colored state or the bleached state.

4,300,139
LORAN-C NAVIGATION APPARATUS
William C. Wurst, Amherst, N.H.; William R. Mercer, Belmont, Mass., and Lester R. Brodeur, Nashua, N.H., assignors to Sanders Associates, Inc., Nashua, N.H.
Filed Aug. 28, 1978, Ser. No. 937,615
Int. Cl.³ G01S *5/10*
U.S. Cl. 343—103 8 Claims

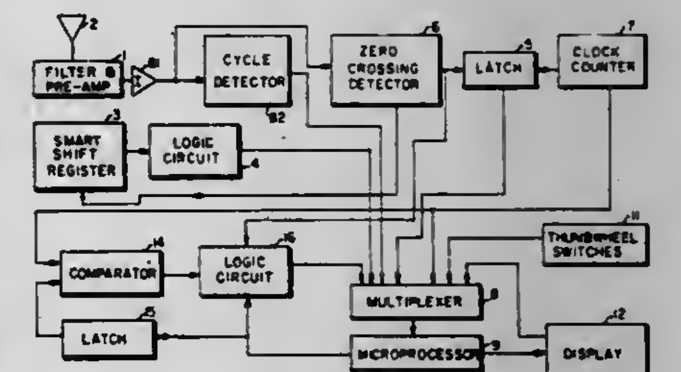

1. A navigation receiver-indicator providing navigation information by receiving and measuring differences in the time of arrival of coded radio signals received from a selected plurality of navigation transmitters where said measurements are made by identifying a tracking point which is a specific zero crossing of the radio frequency carrier of pulses of each coded radio signal and measuring the difference in occurrence between ones of said tracking points comprising:
means for identifying signals (3) received by said receiver-indicator as being said coded radio signals from said selected navigation transmitters;
means (4, 5, 7, 24) responsive to said identifying means for providing time indications of the receipt of said tracking points of said coded radio signals by said receiver-indicator;
processor means (9) storing said time indications of arrival of the tracking points of said coded radio signals over a finite period of time and then calculating the approximate time arrival of subsequent tracking points of said coded radio signals at said receiver-indicator, said processor then pro-

viding a first output signal indicating the time of arrival of each subsequent coded radio signal;

first circuit means (14, 15, 16) responsive to said first output signal from said processor means for processing said radio frequency coded radio signals and generating a second output signal just prior to said specific tracking point of said coded radio signals to indicate the imminent receipt of said tracking point;

means (6) for identifying zero crossings including said first specific tracking point and causing said indicating means to give time indications of the receipt thereof to said processor means, said processor means being responsive to said second output signal and to said last mentioned time indications to locate said tracking point and then measure the difference in the time of arrival of said radio signals from any pair of said transmitters by subtracting said tracking point time indications for said radio signals from each of a pair of said transmitters; and

means (12) responsive to said processor means for displaying said time difference of radio signal arrival measurements to be used for navigation.

4,300,140
COIL LOADED ANTENNA EMBEDDED IN GLASS FIBRE

Don E. Brandigampola, Guelph, Canada, assignor to Valcom Limited, Guelph, Canada
Filed Apr. 2, 1980, Ser. No. 136,694
Claims priority, application Canada, Feb. 26, 1980, 346451
Int. Cl.³ H01Q *1/36, 1/40*
U.S. Cl. 343—873 **6 Claims**

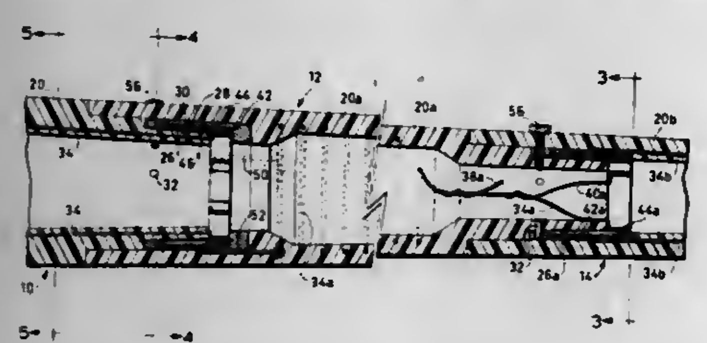

1. A free standing glass fibre antenna which comprises:
at least two elongated antenna sections;
a mounting base at the lower end of a lower said antenna section;
mating electrically conductive male and female couplings interconnecting said antenna sections;
conductive radiating element means embedded in a lower one of said sections;
a single radiating element means of electrically conductive material arranged in a helically wound coil manner and having a plurality of turns, embedded in the glass fibre material of an upper one of such sections, and,
connector portions at each end of said single coil wound radiating element adjacent respective said couplings, and terminally connected to a respective one of said male and female couplings;
at least one other conductive member secured to said coil wound radiating element means at each end thereof and in turn connected to respective ones of said couplings whereby said radiating element means of all said antenna sections are electrically interconnected through said male and female couplings to provide a single and continuous electrical radiating structure.

4,300,141
ROTARY SUPPORT STRUCTURE FOR A POWER ANTENNA CABLE STORAGE DRUM

David T. Carolus, and Ralph W. Edwards, both of Dayton, Ohio, assignors to General Motors Corporation, Detroit, Mich.
Filed Nov. 13, 1979, Ser. No. 93,376
Int. Cl.³ H01Q *1/10*
U.S. Cl. 343—903 **3 Claims**

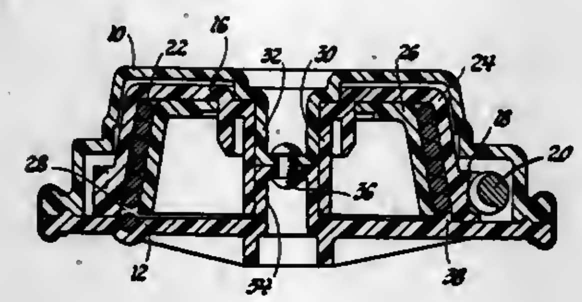

1. An improvement in power antenna drive support mechanisms wherein a cable storage drum having a worm gear formed integrally therewith is rotatably supported on a post in a housing cavity which is closed by a cover; said improvement comprising, a right circular cylindrical support member formed integrally with said cover and axially aligned with said post; and fastening means securing said post and said right circular cylindrical support member together, said cable storage drum being supported for rotation on both said post and said right circular cylindrical support member with the worm gear being spaced from and radially aligned with said right circular cylindrical support member.

4,300,142
THERMAL PRINTER

Steven Kos, Kanata, Canada, assignor to Northern Telecom Limited, Montreal, Canada
Filed Feb. 15, 1980, Ser. No. 121,704
Int. Cl.³ G01D *15/10*
U.S. Cl. 346—76 PH **22 Claims**

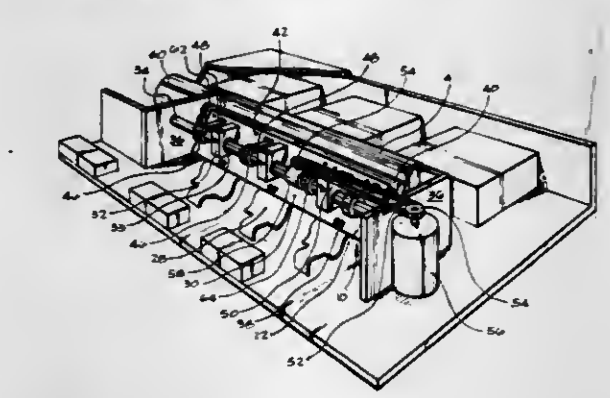

1. A thermal printer for printing lines of print up to predetermined line length, the printer comprising:
a carriage;
a print head mounted on the carriage;
a series of individually addressable print resistors formed on the print head, the series of print resistors extending linearly in a first direction and having an agregate span greater than the predetermined line length, adjacent resistors having a predetermined spacing;
conductive means for selectively applying print current pulses to the print resistors to produce Joule effect heating thereof;
a high speed stepping motor for driving the carriage stepwise in the first direction up to a total distance greater than said predetermined resistor spacing;
means for mounting thermally sensitive paper adjacent the print head;
a second stepping motor for driving the paper stepwise in a second direction perpendicular to the first direction; and

circuit means for temporally relating application of the print current pulses, operation of the high speed stepping motor, and operation of the second stepping motor.

4,300,143
THIN PROTECTIVE OVERCOAT LAYER FOR OPTICAL VIDEO DISC

Alan E. Bell, East Windsor; Robert A. Bartolini, Trenton; Allen Bloom, East Windsor, and William J. Burke, Princeton Junction, all of N.J., assignors to RCA Corporation, New York, N.Y.
Continuation of Ser. No. 828,816, Aug. 29, 1977, abandoned. This application Oct. 22, 1979, Ser. No. 87,453
Int. Cl.³ G01D *15/34*
U.S. Cl. 346—135.1 **8 Claims**

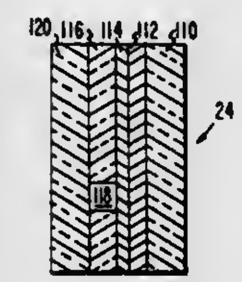

1. A record blank for use with a recording laser beam providing light of a given frequency, said blank comprising:
a layer of light reflecting material;
a layer of light absorbing material overlying said light reflecting material; and
a solid, transparent, hard, inert, thin protective overcoat which is comprised of a material selected from the group consisting of derivatives of sucrose in which the hydroxyl groups of the sucrose are replaced by ester groups, pentaerythritol derivatives of rosin acids, and polymers formed from acetylene or perfluoromethylcyclohexane in a glow discharge, overlying said light absorbing layer such that surface contaminants can be removed from said overcoat; wherein the thickness of said overcoat is a function of the wavelength of said laser beam and of the refractive index of the overcoat material at said wavelength.

4,300,144
MULTIPLE-NOZZLE INK-JET RECORDING APPARATUS

Takuro Isayama; Hiroshi Yamazaki, both of Tokyo; Hiromichi Komai, Kawasaki, and Tsutomu Sato, Yokohama, all of Japan, assignors to Ricoh Co., Ltd., Ota, Japan
Filed Oct. 18, 1979, Ser. No. 86,074
Claims priority, application Japan, Feb. 11, 1978, 53-135431
Int. Cl.³ G01D *15/16*
U.S. Cl. 346—140 R **3 Claims**

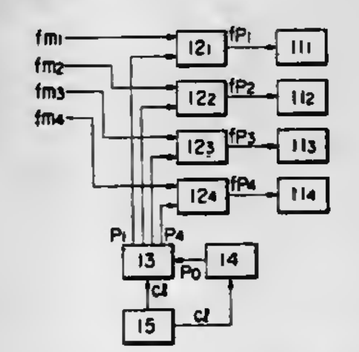

1. A multiple-nozzle ink-jet recording apparatus, comprising:
a plurality of print head units each provided with an electrostrictive ink ejection means;
a corresponding plurality of electrical drive circuits, each drive circuit having an input terminal for receiving a corresponding image or print signal and an output terminal coupled to a corresponding one of said electrostrictive means; and
timing control means coupled to all of said drive circuits for sequentially enabling the same, said timing control means operating at a given clock frequency and causing said drive circuits to actuate the corresponding electrostrictive means out of phase with each other, so that any resulting audio frequency or ultrasonic vibrations of said print heads are out of phase with each other, and combine to produce a composite sound or ultrasonic noise level of substantially less amplitude than would otherwise be produced.

4,300,145
CLOSING DEVICE FOR AN INK PRINTING HEAD

Cornelis van Raamsdonk, Schortens, Fed. Rep. of Germany, assignor to Olympia Werke AG, Wilhelmshaven, Fed. Rep. of Germany
Filed May 16, 1980, Ser. No. 150,657
Claims priority, application Fed. Rep. of Germany, May 16, 1979, 2919727
Int. Cl.³ G01D *15/18*
U.S. Cl. 346—140 R **6 Claims**

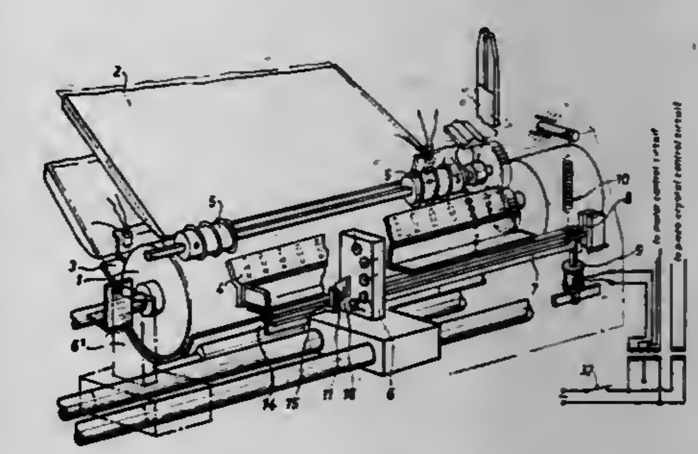

1. In an ink printing unit including platen means for supporting a record carrier, an ink printing head movable along a path of travel parallel to the platen means; the ink printing head including nozzle means and a nozzle outlet area through which ink is ejected onto the record carrier supported on the platen means; and a sealing device for periodically closing off said nozzle outlet area by engagement with an end face of said ink printing head in the zone of the nozzle outlet area; the improvement wherein said sealing device comprises
(a) a sealing cushion;
(b) mounting means carrying said sealing cushion;
(c) support means for positioning said mounting means such that said sealing cushion is held substantially in a plane defined by said end face of said ink printing head;
(d) guide means constraining said mounting means and said sealing cushion to travel with said ink printing head as a unit; and
(e) setting means supported in said ink printing unit and being operatively connected to said mounting means for moving, at any location of said ink printing head along said path of travel, said mounting means and said sealing cushion as a unit into a first position in which said sealing cushion sealingly closes off said nozzle outlet area by engagement with said end face and into a second position in which said sealing cushion is withdrawn from said nozzle outlet area; said setting means being stationary with respect to said travelling path.

4,300,146
ELECTROSTATIC WRITE HEAD

Pol A. G. J. Gustin, and Raymond G. G. Schayes, both of Brussels, Belgium, assignors to U.S. Philips Corporation, New York, N.Y.

Continuation of Ser. No. 962,265, Nov. 20, 1978, abandoned. This application Feb. 25, 1980, Ser. No. 124,155
Claims priority, application Belgium, Dec. 6, 1977, 183188
Int. Cl.^{3} G01D *15/06*

U.S. Cl. 346—155 **2 Claims**

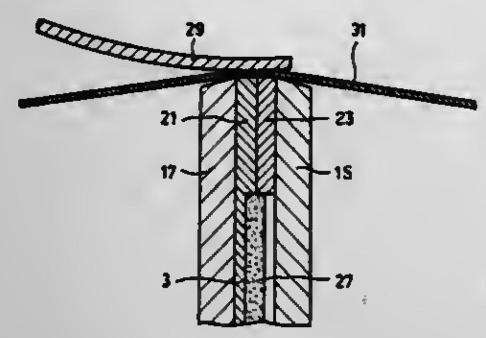

1. An electrostatic write head having a medium scanning end which is manufactured by providing an insulating plate having at least one side which is planar, providing a plurality of printed circuit type conductor tracks on said at least one side of the plate, said conductor tracks each terminating in a strip-shaped region on said plate, each successive laterally adjacent conductor track entering the strip-shaped region from opposite directions, and the parts of the conductor tracks situated inside the strip-shaped region extending parallel to each other, dividing the plate into first and second elements along a dividing line which extends through said strip-shaped region perpendicularly to and through each of said conductor tracks in said strip-shaped region, rotating the first and second elements relative to each other around the dividing line so that the sides thereof accommodating conductor tracks face each other, the ends of said conductor tracks proximate to said dividing line constituting the medium scanning end portion of said electrostatic write head, providing an insulating layer beween a portion of said first and second elements intermediate the conductor tracks at an area spaced from the dividing line, the conductor tracks in said region being mutually parallel and each track being spaced in the same direction from each laterally adjacent track and each track extending to an edge remote from said dividing line of said plate, the conductor tracks on said first element each being disposed in coplanar relationship with a conductor track on said second element, one of every two coplanar conductor strips respectively disposed on said first and second elements being extended to form a connection conductor, the other having a length which is no more than a few times the width thereof, said first and second elements being oriented with respect to each other with the sides thereof having conductor tracks disposed thereon facing each other, each conductor track on said first and second elements being provided with a connection conductor disposed proximate to a conductor track on the other element which is not provided with a connection conductor, said insulating layer being provided between the first and second elements in the region of the connection conductors, thereby providing an integral head.

4,300,147
SYSTEM FOR ACCURATELY TRACING WITH A CHARGED PARTICLE BEAM ON FILM

Andrew A. Tarnowski, New Canaan, Conn., assignor to Image Graphics, Inc., Fairfield, Conn.

Filed Mar. 26, 1979, Ser. No. 23,548
Int. Cl.^{3} G06F *3/14*

U.S. Cl. 346—159 **30 Claims**

1. A system for accurately tracing with a charged particle beam on film, comprising:

(a) film gate means for receiving a film sensitive to charged particles, said film gate means having a portion with a predetermined continuous curvature to impart a predetermined continuous curvature to a portion of the film in said film gate means and provide controlled distortion of the film;

(b) charged particle emission means for emitting a beam of charged particles, said charged particle emission means

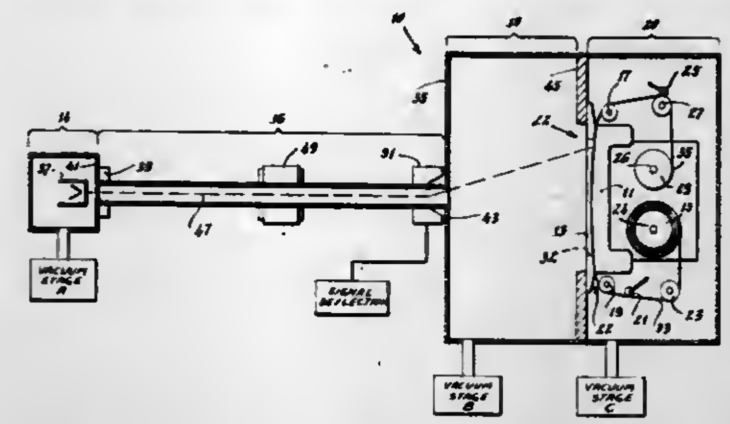

being positioned relative to said film gate means for exposing the film to the charged particle beam over at least a portion of said predetermined continuous curvature; and

(c) transport means for intermittendly moving the film within said film gate means in the direction of the length of the film for exposure to said charged particles when said film is stationary on said film gate.

4,300,148
SEMICONDUCTOR DEVICE GATE-DRAIN CONFIGURATION

William C. Niehaus, New Providence, and Stuart H. Wemple, Chatham, both of N.J., assignors to Bell Telephone Laboratories, Incorporated, Murray Hill, N.J.

Filed Aug. 10, 1979, Ser. No. 65,526
Int. Cl.^{3} H01L *29/48*

U.S. Cl. 357—15 **6 Claims**

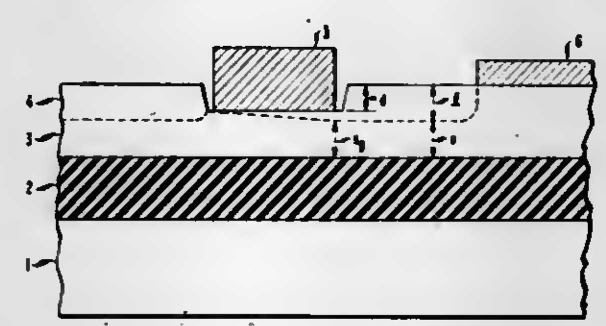

1. Metal-semiconductor field effect device comprising a substrate, an active layer which is epitaxially deposited on said substrate and which is doped with at least one significant free carrier impurity, a metal-semiconductor Schottky barrier gate contact on a first portion of said active layer, a drain contact on a second portion of said active layer, said second portion of said active layer being disposed relative to said first portion of said active layer so as to allow for a third portion of said active layer, said third portion being the portion of said layer which is intermediate to said first portion and said second portion, said third portion here being designated output space, said device being CHARACTERIZED IN THAT per-unit-area concentration of free carriers in said output space is in the range of 0.7 to 1.1 times per-unit-area concentration of free carriers in said first portion.

4,300,149
GOLD-TANTALUM-TITANIUM/TUNGSTEN ALLOY CONTACT FOR SEMICONDUCTOR DEVICES AND HAVING A GOLD/TANTALUM INTERMETALLIC BARRIER REGION INTERMEDIATE THE GOLD AND ALLOY ELEMENTS

James K. Howard, Fishkill, and James F. White, Newburgh, both of N.Y., assignors to International Business Machines Corporation, Armonk, N.Y.

Filed Sep. 4, 1979, Ser. No. 72,706
Int. Cl.^{3} H01L *23/48, 29/46, 29/54*

U.S. Cl. 357—71 **11 Claims**

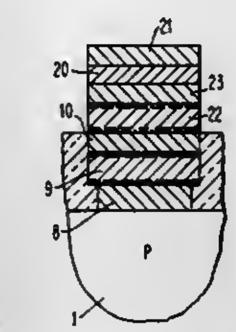

1. A conductive contact structure for a semiconductor substrate comprising:

(a) a contact layer, adjacent said substrate, of an alloy of titanium and tungsten,

(b) a barrier layer over said contact layer, comprised stratum of a coextending barrier region of an intermetallic compound of gold and a transistion metal wherein said transition metal is selected from the group consisting of tantalum, hafnium, zirconium and niobium, and

(c) a layer of gold over said barrier layer.

4,300,150
LATERAL DOUBLE-DIFFUSED MOS TRANSISTOR DEVICE

Sel Colak, Briarcliff Manor, N.Y., assignor to North American Philips Corporation, New York, N.Y.

Filed Jun. 16, 1980, Ser. No. 159,883
Int. Cl.^{3} H01L *29/72*

U.S. Cl. 357—23 **8 Claims**

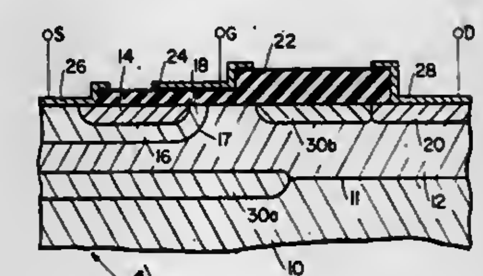

1. A lateral double-diffused MOS transistor having a semiconductor substrate of a first conductivity type, an epitaxial surface layer of a second conductivity type opposite to that of the first on a major surface of said substrate, a surface-adjoining channel region of said first conductivity type in said epitaxial layer and forming a p-n junction therewith, a surface-adjoining source region of said second conductivity type in said channel region, a surface-adjoining drain region of said second conductivity type in said epitaxial layer and spaced apart from said channel region, an insulating layer on said surface layer and covering at least that portion of said channel region located between said source region and said drain region, a gate electrode on said insulating layer, over said portion of the channel region and electrically isolated from said surface layer, and source and drain electrodes connected respectively to the source and drain regions of said transistor, characterized in that an electrical field-redistribution means comprising a field-shaping semiconductor layer of said first conductivity type and having a doping level greater than that of said substrate is provided adjacent but spaced apart from said channel region for reducing the electrical field density during operation in a first part of the epitaxial layer mainly located adjacent said p-n junction and between said source and drain regions while increasing the electrical field density during operation in a second part of the epitaxial layer mainly located adjacent said drain region.

4,300,151
CHANGE TRANSFER DEVICE WITH PN JUNCTION GATES

Jun-ichi Nishizawa, Sendai, Japan, assignor to Zaidan Hojin Handotai Kenkyu Shinkokai, Sendai, Japan

Filed Jun. 22, 1979, Ser. No. 51,201
Claims priority, application Japan, Jul. 19, 1978, 53-88868
Int. Cl.^{3} H01L *29/78, 29/80;* **G11C** *19/28*

U.S. Cl. 357—24 **2 Claims**

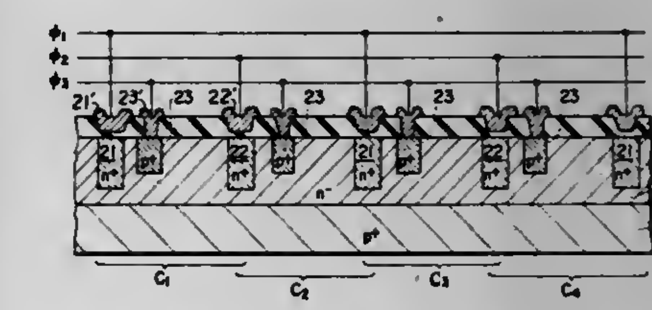

1. A semiconductor charge transfer device formed in a semiconductor wafer having a pair of principal surfaces, said device including at least one charge transfer train comprising a plurality of cells connected in series, each cell comprising:

a first and a second semiconductor region, each having one conductivity type and a low resistivity, and formed adjacent to one of said principal surfaces;

a third semiconductor region of said one conductivity type and a high resistivity and disposed between said first and second semiconductor regions;

a first insulating layer disposed on said first semiconductor region except for in the first cell;

a second insulating layer disposed on said second semiconductor region except for the last cell;

a first and a second electrode formed on said first and second insulating layer, respectively, for controlling the potential of said first and second semiconductor regions; and

controlling means for controllably generating an electric field to effect drift of charge carriers between said first and second semiconductor regions;

said controlling means including a fourth semiconductor region of the other conductivity type opposite to said one conductivity type and disposed in said semiconductor wafer adjacent to said third semiconductor region, and a third electrode disposed on said fourth semiconductor region for controlling the potential of said fourth semiconductor region, said controlling means establishing a controllable potential barrier with respect to said charge carriers having a height in the vicinity of said first semiconductor region in accordance with both said control potential and the respective potentials associated with said first and second semiconductor regions;

said first semiconductor region of each cell being merged with the second semiconductor region of the preceding cell;

said second insulating layer and said second electrode for a cell excepting the last cell, being common to said first insulating layer and said first electrode for the next adjacent cell, respectively;

said third electrodes of all the cells in said train being connected in common.

4,300,152
COMPLEMENTARY FIELD-EFFECT TRANSISTOR INTEGRATED CIRCUIT DEVICE

Martin P. Lepselter, Summit, N.J., assignor to Bell Telephone Laboratories, Incorporated, Murray Hill, N.J.
Filed Apr. 7, 1980, Ser. No. 138,228
Int. Cl.³ H01L *27/04, 29/78, 29/56*
U.S. Cl. 357—42 4 Claims

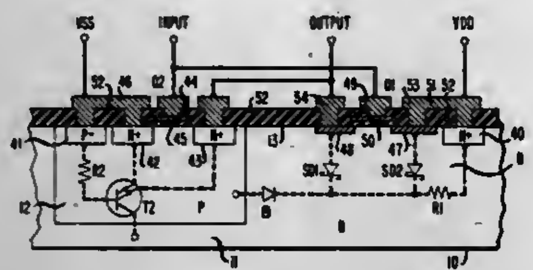

1. A complementary field-effect transistor integrated circuit device comprising a semiconductive body having a first bulk region of one conductivity type extending from a surface of the body; a second bulk region, of a conductivity type which is opposite to the one type, extending from the surface; and a pair of complementary transistors adjacent the surface, one of the pair being of the opposite channel conductivity type and having spaced source and drain situated in the first bulk region, the other of the pair being of the one channel conductivity type and having spaced source and drain situated in the second bulk region;

characterized in that the source and drain of at least one of the complementary pair of transistors each consists of a connection that is substantially incapable of injecting minority carriers when forward biased with respect to the bulk region in which the connection is situated whereby there are avoided the parasitic conditions for latchup.

4,300,153
FLAT SHAPED SEMICONDUCTOR ENCAPSULATION

Masao Hayakawa, Kyoto; Takamichi Maeda, Yamatokoriyama, and Masao Kumura, Nara, all of Japan, assignors to Sharp Kabushiki Kaisha, Osaka, Japan
Continuation of Ser. No. 943,556, Sep. 18, 1978, abandoned. This application Sep. 25, 1980, Ser. No. 190,744
Int. Cl.³ H01L *23/28, 39/02, 23/02*
U.S. Cl. 357—80 12 Claims

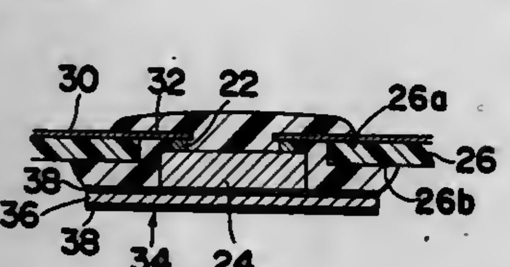

1. A semiconductor device comprising:
a semiconductor chip;
electrodes formed on one major surface of said semiconductor chip;
a flexible film support substrate provided with a through opening for securing said semiconductor chip therein;
lead electrodes carried by said support substrate and electrically connected to said electrodes formed on said one major surface of said semiconductor chip;
a cover plate, spaced from said support substrate and having a size larger than said semiconductor chip, fixed to the opposing major surface of said semiconductor chip; and
a resin mold which contacts said semiconductor chip, said support substrate and said cover plate and which cooperates with said cover plate to substantially encapsulate said semiconductor device.

4,300,154
COLOR DEMODULATION AND MATRIXING SYSTEM

Christopher M. Engel, Arlington Heights, Ill., assignor to Zenith Radio Corporation, Glenview, Ill.
Filed Jun. 23, 1980, Ser. No. 161,839
Int. Cl.³ H04N *9/50*
U.S. Cl. 358—23 12 Claims

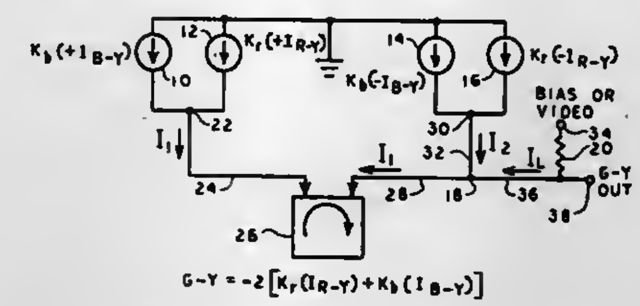

1. In a color television receiver, a color demodulation and matrixing system, comprising:
demodulation means for developing the R-Y and B-Y color-differenec signals;
means for converting the R-Y color-difference signal to first and second R-Y currents of opposing polarities, and for converting the B-Y color-difference signal to first and second B-Y currents of opposing polarities; and
means for coupling said first and second R-Y currents and said first and second B-Y currents to a load such that a resulting current which corresponds to a G-Y color-difference signal is developed through the load.

4,300,155
PAL DEMODULATOR HAVING NON-SYNCHRONIZED LINE SWITCH

Takayuki Sagishima, Suita, and Teruo Kitani, Takatsuki, both of Japan, assignors to Matsushita Electric Industrial Co., Ltd., Osaka, Japan
Filed Apr. 11, 1980, Ser. No. 139,223
Claims priority, application Japan, Apr. 19, 1979, 54-48799; Feb. 15, 1980, 55-18351
Int. Cl.³ H04N *9/50*
U.S. Cl. 358—24 4 Claims

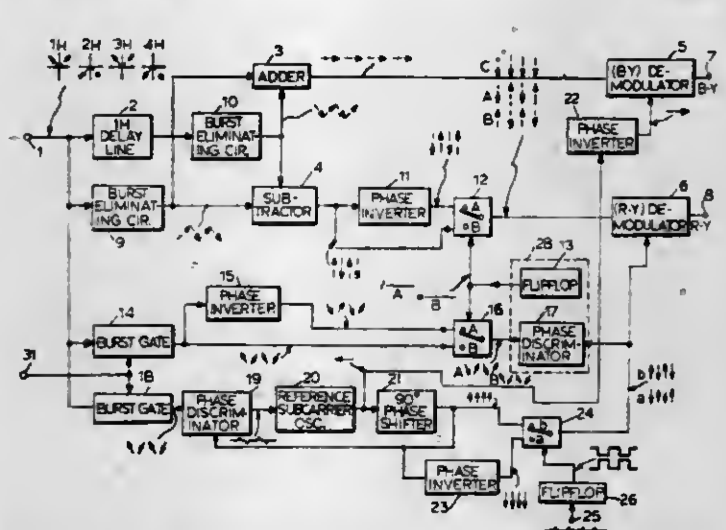

1. A color demodulator circuit for color television signals in the PAL system, comprising:
a (R−Y) demodulator;
a switch means supplied with (1) a carrier chrominance signal in (R−Y) axis, (2) a further carrier chrominance signal the same as said carrier chrominance signal except that the polarity of the latter is reversed from that of the former, (3) a burst signal having (R−Y) axis component, and (4) a further burst signal the same as said burst signal except that the polarity of the latter is reversed from that of the former, said switch means having a switch control terminal supplied with a switch control signal for controlling the switching operation of said switch means, so that said switch means outputs either both of said carrier chrominance signal and said burst signal or both of said further carrier chrominance signal and said further burst signal, the thus outputted carrier chrominance signal and further carrier chrominance signal being fed to an input terminal of said (R−Y) demodulator;
a further switch means supplied with a reference subcarrier in (R−Y) axis and a further reference subcarrier the same as said reference subcarrier except that the polarity of the latter is reversed from that of the former, said further switch means having a switch control terminal supplied with a switching pulse train having a frequency ($f_H/2$) of half of horizontal scanning frequency, so that said further switch means alternately outputs said reference subcarrier and said further reference subcarrier to a further input terminal of said (R−Y) demodulator so as to demodulate the carrier chrominance signal inputted to said (R−Y) demodulator;
a control circuit having two input terminals and an output terminal, one input terminal being supplied with said burst signal or said further burst signal from said switch means, the other input terminal being supplied with said reference subcarrier or said further reference subcarrier, said output terminal of said control circuit being coupled to said switch control terminal of said switch means, said control circuit having a discrimination function of discriminate between (a) the phase of said burst signal or said further burst signal from said switch means and (b) the phase of said reference subcarrier or said further reference subcarrier from said further switch means so as to produce, as said switch control signal to said switch means, an output signal having alternative one of two levels for causing an output signal of said (R−Y) demodulator to have a correct polarity.

4,300,156
PROJECTION TELEVISION RECEIVER HAVING DICHROIC MIRRORS AND A PROJECTING LENS WITH THREE DIFFERENT FOCAL POINTS

Kenneth L. Boyd, Stow, Mass., assignor to The Magnavox Company, New York, N.Y.
Continuation of Ser. No. 789,749, Apr. 21, 1977, abandoned. This application May 21, 1979, Ser. No. 40,811
Int. Cl.³ H04N *9/16*
U.S. Cl. 358—64 2 Claims

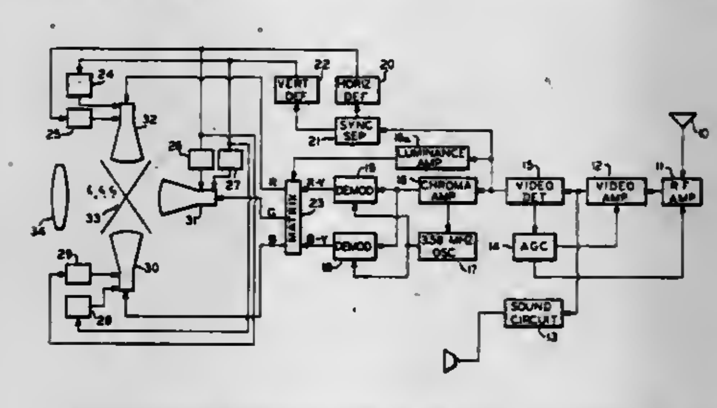

1. A color projection television receiver comprising:
(a) signal processing circuits for deriving R, G and B signals for modulating a plurality of kinescopes;
(b) a plurality of kinescopes comprising a first kinescope for producing a substantially red image, a second kinescope for producing a substantially blue image and a third kinescope for producing a substantially green image, said kinescopes being modulated by said R, G and B signals;
(c) deflection means for scanning electron beams produced by said plurality of kinescopes;
(d) dichroic mirrors for directing images produced by said plurality of kinescopes along the axis of a projecting lens, each of said images being located at a position determined by the spacing of each kinescope with respect to said dichroic mirrors;
(e) a projection lens for transmitting images produced by said dichroic mirrors to a distant screen, said lens having a first focal point for red light, a second focal point for blue light and a third focal point for green light along an axis of said lens, said focal points being separated from each other along said axis;
(f) said kinescopes being positioned with respect to said dichroic mirrors whereby said red image is positioned at said first focal point, said blue image is positioned at said second focal point and said green image is positioned at said third focal point; and
(g) means for altering the respective size of said images produced by said kinescopes whereby differences in magnification of said projection lens for different wave lengths of light are compensated.

4,300,157
MEANS FOR ENHANCING UNIFORMITY IN ELECTRON BEAM SPOT SIZE IN TELEVISION PICTURE TUBES

Richard W. Midland, Inverness, Ill., assignor to Zenith Radio Corporation, Glenview, Ill.
Filed Feb. 11, 1980, Ser. No. 120,025
Int. Cl.³ H04N *9/24, 5/68;* H01J *29/52, 29/56*
U.S. Cl. 358—74 2 Claims

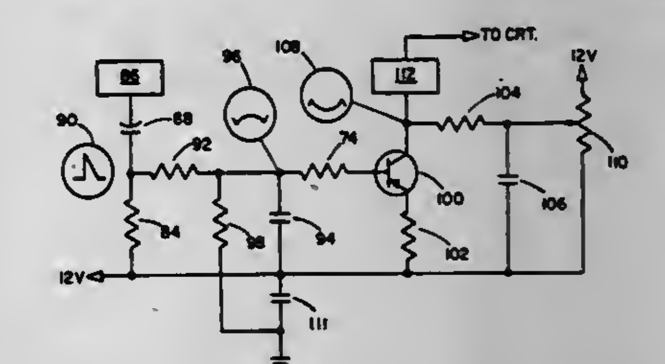

1. In a television receiver system having a cathode ray picture tube including a substantially rectangular faceplate with a phosphor-bearing imaging screen deposited thereon, and at least one electron gun for projecting at least one electron beam on said screen to produce a spot for picture imaging, said receiver system having means for developing a luminance signal, and horizontal and vertical scansion circuit means for scansion of said beam spot, and wherein said beam spot is undesirably gradationally enlarged from the minor axis of said faceplate to the minor sides of said faceplate, means for providing greater spot size uniformity across the screen comprising:
means for deriving a beam-current-control signal from said horizontal scansion circuit means in which the amplitude of said signal varies monotonically as a function of the distance of said beam spot from said minor axis; and,
means receiving said beam-current-control signal for modulating said luminance signal with said beam-current-control signal, said beam-current-control signal having such characteristics that said modulation causes a predetermined gradational reduction in beam current at least from said minor axis to the minor sides of said faceplate to inhibit beam spot enlargement in the side zones and thus provide greater spot size uniformity across the screen.

4,300,158
PROCESS CONTROL APPARATUS
Rudolph A. Morgenfruh, Huntington Station, and William W. Burnham, Mineola, both of N.Y., assignors to Hazeltine Corporation, Greenlawn, N.Y.
Continuation of Ser. No. 816,631, Jul. 18, 1977, abandoned. This application Jun. 11, 1979, Ser. No. 47,663
Int. Cl.³ H04N *1/46*
U.S. Cl. 358—80 **21 Claims**

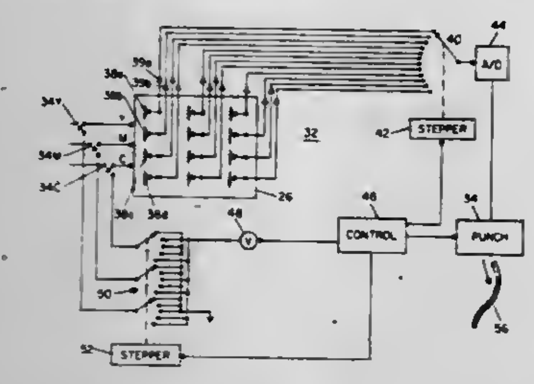

1. Apparatus, for use in connection with a process machine having a plurality of adjustable process control elements which act on process signals to vary at least one characteristic of the signals and thereby vary the process, comprising:
a process simulating apparatus operative on supplied simulation signals and having adjustable simulation control elements corresponding to said process control elements, said simulating apparatus having indicating means for providing a representation of the actual process result in accordance with the settings of said simulation control elements;
means for supplying predetermined simulation signals to said process machine;
reading means for providing a sequence of control position signals, each representative of the electrical output of one of said simulation control elements when said predetermined simulation signals are supplied to said simulation apparatus;
and process machine control operating means, sequentially responsive to each of said control position signals and the electrical output of each of said process control elements when said predetermined simulation signals are supplied to said process machine, for adjusting the condition of said process control elements.

4,300,159
SCANNER
Robert A. Frosch, Administrator of the National Aeronautics and Space Administration, with respect to an invention of; Robert F. Hummer, and Deane T. Upton, both of Santa Barbara, Calif.
Continuation of Ser. No. 583,219, Sep. 30, 1966, abandoned. This application May 19, 1975, Ser. No. 578,700
Int. Cl.³ H04N *1/04, 3/02, 5/30*
U.S. Cl. 358—109 **1 Claim**

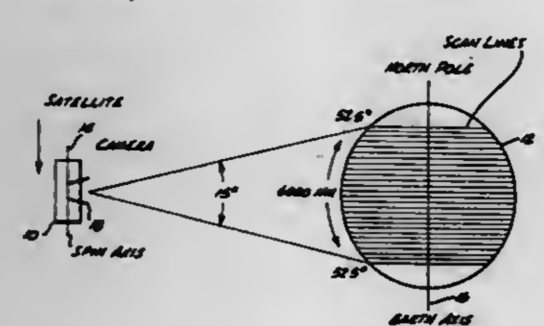

1. In a spin-stabilized satellite positioned in a synchronous orbit whereby the satellite remains in a relatively stationary relationship over an area to be scanned on a terrestrial body, optical means positioned in said satellite and spinning therewith to scan said area, said optical means movable about an axis perpendicular to the spin axis of the satellite, means to induce movement of said optical means in discrete increments keyed to the spin rate of the satellite, and sensing means to receive physical data from the scanned area, said sensing means in an operative arrangement with said optical means.

4,300,160
THERMAL IMAGING DEVICE FOR DETECTING AND IDENTIFYING A THERMAL OBJECT
Günter Pusch, Neckargemünd-Dilsberg, and Alexander Hoffmann, Maner, both of Fed. Rep. of Germany, assignors to U.S. Philips Corporation, New York, N.Y.
Filed Nov. 6, 1979, Ser. No. 91,851
Claims priority, application Fed. Rep. of Germany, Nov. 8, 1978, 2848325
Int. Cl.³ H04N *3/08*
U.S. Cl. 358—113 **5 Claims**

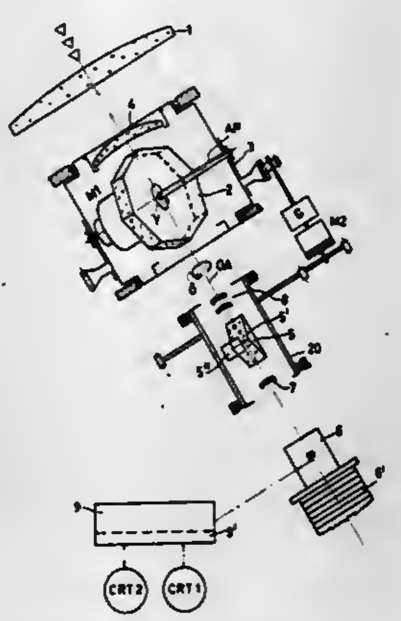

1. A thermal imaging device for detecting and identifing a thermal object, said device comprising:
an objective system;
a rotating, infrared radiation-transmitting scanning polygon arranged on an optical axis behind the objective system; and
an infrared sensor array arranged on the optical axis behind the polygon such that radiation emerging from the polygon is incident on the infrared sensor array, characterized in that;
the scanning polygon rotates about the optical axis and rotates about another axis which is perpendicular to the optical axis, said later rotation causing deflection of the infrared radiation radially with respect to the optical axis;
the device further comprises a reversing optic arranged on the optical axis behind the polygon, said reversing optic rotating about the optical axis at half the angular frequency at which the polygon rotates about the optical axis; and
the infrared sensor array is stationary.

4,300,161
TIME COMPRESSION MULTIPLEXING OF VIDEO SIGNALS
Barin G. Haskell, Tinton Falls, N.J., assignor to Bell Telephone Laboratories, Incorporated, Murray Hill, N.J.
Filed Mar. 3, 1980, Ser. No. 126,422
Int. Cl.³ H04N *7/08;* H04J *3/00*
U.S. Cl. 358—142 **6 Claims**

1. A signal processor including a plurality of input terminals (111, . . . , 11N) each input terminal adapted to receive a video signal, said video signal including a plurality of scan lines, a

scan line having a predetermined time duration, first means for compressing said video signal, said first compressing means including a plurality of first delay networks (142, . . . , 14N), an adder (150) for adding said compressed signals and means for extending a sum output of said adder to a communication path (300) and CHARACTERIZED IN THAT said signal processor further comprises:
second means coupled to said first compressing means for time compressing said video signals by a compression factor M, said second time compressing means including

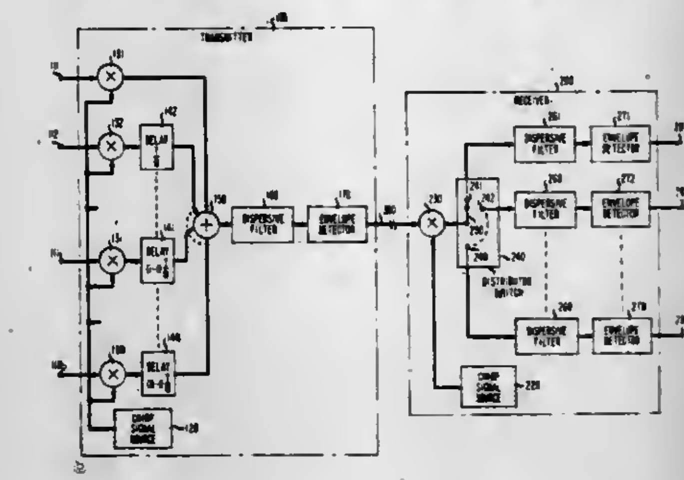

(a) means (120, 131, . . . 13N) for modulating each of said input video signals;
(b) means (160) responsive to said modulated video signal for introducing a second, variable delay to said modulated video signal; and
(c) means (170) responsive to said second delay introduced signal for extracting a time compressed replica of said video signal and for extending said replica to said communication path.

4,300,162
FIELD INTERPOLATION CIRCUIT
Klaas H. J. Robers, Eindhoven, Netherlands, assignor to U.S. Philips Corporation, New York, N.Y.
Filed Jan. 10, 1980, Ser. No. 111,137
Claims priority, application Netherlands, Jan. 16, 1979, 7900324
Int. Cl.³ H04N *5/14*
U.S. Cl. 358—160 **4 Claims**

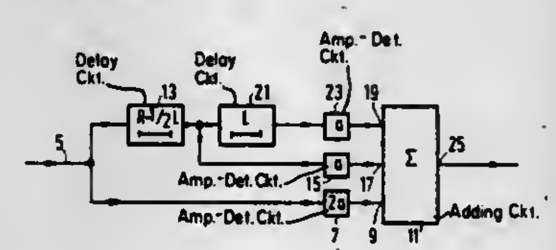

1. A field interpolation circuit for combining signals corresponding to signals from consecutive fields of an original picture with an interpolated signal in such an amplitude ratio that in a picture to be displayed by means of this interpolated signal, the sum of the brightnesses to be produced by signals corresponding to signals from a plurality of lines of the picture to be displayed, these signals being obtained by the field interpolation circuit instead of a signal from a line of the original picture, is substantially the same for every field, characterized in that said field interpolation circuit comprises an input for receiving video signals, a first and a second means for delaying video signals serially coupled to said input, an adding circuit, and means for applying to said adding circuit in a predetermined ratio the video signals as applied to said input, the output of said first delaying means and the output of said second delaying means, the output of said adding circuit forming the output of said field interpolation circuit.

4,300,163
SOLID-STATE IMAGING APPARATUS
Takamichi Wada, Hirakata, and Yasuaki Terui, Neyagawa, both of Japan, assignors to Matsushita Electric Industrial Co., Ltd., Osaka, Japan
Filed Dec. 7, 1979, Ser. No. 101,176
Claims priority, application Japan, Dec. 8, 1978, 53-152367
Int. Cl.³ H04N *5/34*
U.S. Cl. 358—163 **6 Claims**

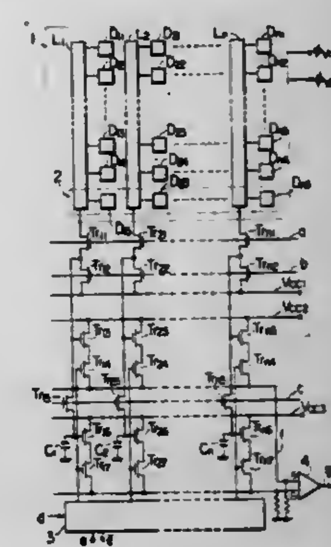

1. A solid-state imaging apparatus comprising:
an imaging unit including a light receiving section for picking up an optical image signal by horizontal scanning and a light shielded section provided in parallel with the direction of horizontal scanning and over an area scanned by said horizontal scanning, said light shielded section being shielded from said optical image signal;
means for reading out respective signals from said light receiving and light shielded sections;
a memory unit for storing signals from said light shielded section during read out of signals from the light receiving section; and
differential means for differentiating signals from the light receiving section and signals stored in the memory unit.

4,300,164
ADAPTIVE VIDEO PROCESSOR
Jack Sacks, Thousand Oaks, Calif., assignor to View Engineering, Inc., Chatsworth, Calif.
Filed Mar. 21, 1980, Ser. No. 133,499
Int. Cl.³ H04N *5/14, 1/40;* G06K *9/12*
U.S. Cl. 358—163 **14 Claims**

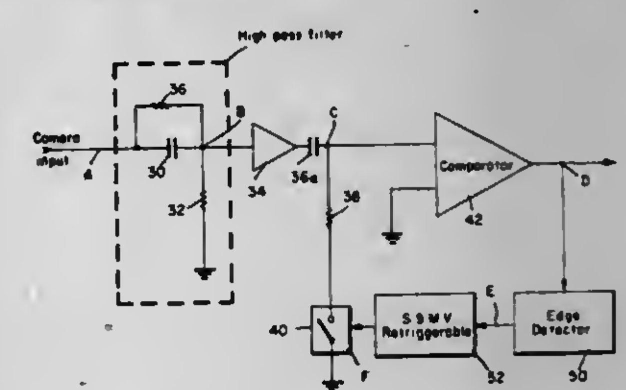

1. An adaptive video processor for use with a pattern recognition system comprising:
video camera means for generating a video signal representative of an area being scanned,
circuit means connected to the output of said video camera for generating a substantially constant amplitude output signal,
comparing means for generating an output signal whenever

said video signal changes positively or negatively with respect to ground,

capacitor means interconnecting said circuit means with said comparing means, and

capacitor charging and discharging means selectively controlled by the output of said comparing means for controlling the charging and discharging of said capacitor means to ground as a function of the output signals received from said comparing means.

4,300,165

DUAL MODE AUTOMATIC FINE TUNING

Seung K. Kim, Portsmouth, Va., assignor to General Electric Company, Portsmouth, Va.

Continuation of Ser. No. 894,608, Apr. 7, 1978, abandoned. This application Aug. 17, 1979, Ser. No. 67,506

Int. Cl.³ H04N *5/44*

U.S. Cl. 358—195.1 **10 Claims**

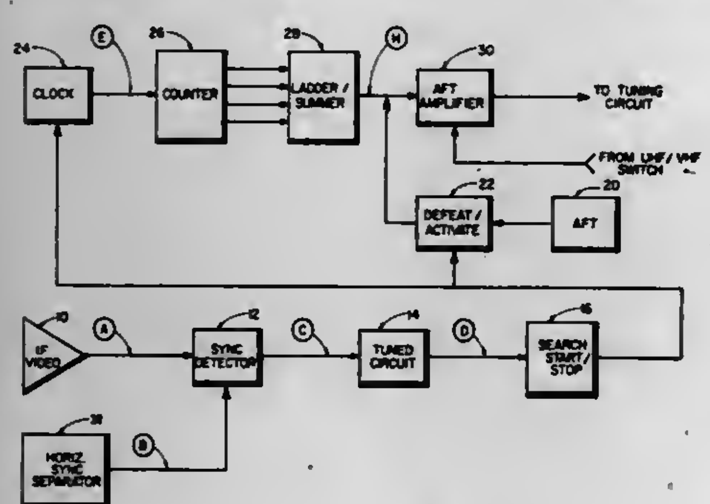

1. In a television receiver having automatic fine tuning means for causing the tuner of said television receiver to seek and hold the picture carrier for the channel selected, a search system for extending the pull-in range of said automatic fine tuning means comprising:

search means for generating a reversing steps staircase search signal,

control means responsive to synchronizing pulses carried by said picture carrier to develop a control signal therefrom,

switch means coupled to said automatic fine tuning means and to said search means and responsive to said control signal to activate said search means and defeat said automatic fine tuning means in the absence of a control signal and to cause said search means to hold at the level of search signal attained said to activate said automatic fine tuning means upon the presence of said control signal, and

means coupling said search means and said automatic fine tuning means to said tuner so that said search signal serves as a coarse adjustment of said tuner within the channel selected to bring said tuner within the pull-in range of said automatic fine tuning means, said automatic fine tuning means utilizing the held level of said search singal as a reference to fine tune said tuner about said held level.

4,300,166

SYSTEM FOR TRANSMITTING SIGNALS BETWEEN A TELEVISION CAMERA AND THE ASSOCIATED CONTROL UNIT

Mohamed Marey, Gross-Gerau, Fed. Rep. of Germany, assignor to Robert Bosch GmbH, Stuttgart, Fed. Rep. of Germany

Filed Dec. 12, 1979, Ser. No. 102,781

Claims priority, application Fed. Rep. of Germany, Dec. 18, 1978, 2854610

Int. Cl.³ H04N *5/24*

U.S. Cl. 358—210 **5 Claims**

1. In a system having a television camera generating a camera video signal and at least a first and second camera audio signal, a control unit including means for generating a control video signal and at least a first and second control audio signal, optical wave guide means for transmitting signals between said control unit and said camera, and wherein said first audio signal has a predetermined frequency range;

apparatus for generating signals suitable for transmission through said optical wave guide means, comprising

means for generating a first and second carrier signal, said second carrier signal having a frequency outside of said predetermined frequency range;

means (13) for amplitude modulating said second carrier

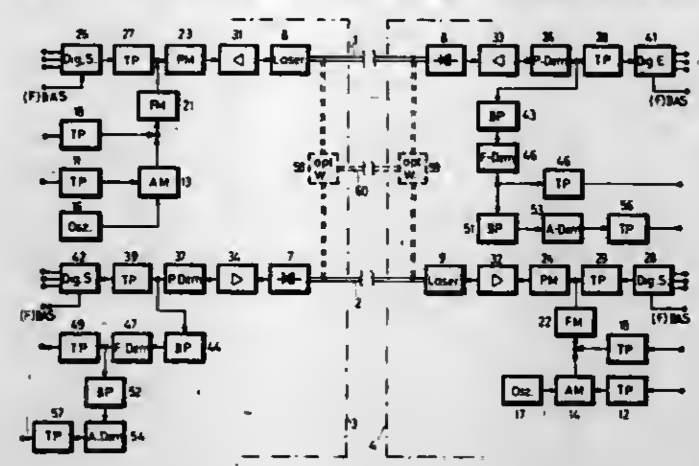

signal with said first audio signal, thereby creating an amplitude modulated signal;

means for frequency modulating said second audio signal and said amplitude modulated signal onto said first carrier signal, thereby creating a frequency modulated signal;

means (23) for pulse modulating said frequency modulated signal and said video signal, thereby creating a pulse modulated signal;

means (6) for furnishing a laser beam and applying said laser beam to said optical wave guide means; and

means for modulating said laser beam with said pulse modulated signal, thereby creating said signal for transmission through said optical wave guide means.

4,300,167

AUTOMATIC IRIS CONTROL SYSTEM

Frederick A. Miller, Santa Barbara, and Edward A. Wooff, Jr., Ventura, both of Calif., assignors to Circon Corporation, Santa Barbara, Calif.

Filed Feb. 7, 1980, Ser. No. 119,318

Int. Cl.³ H04N *5/30*

U.S. Cl. 358—210 **12 Claims**

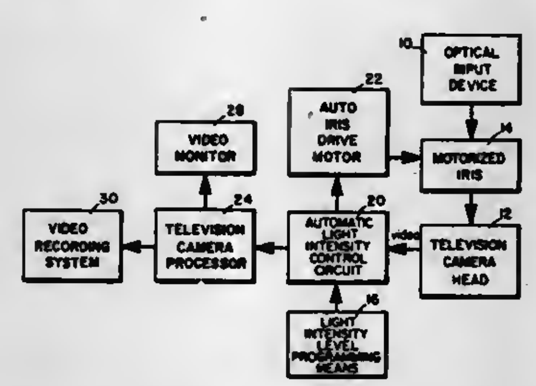

1. An automatic light intensity control system comprising

an optical input device having a light source which is adapted to direct light upon a subject to produce a dynamic optical image having spikes of short durations of high intensity of reflected light and variations of light intensity due to variations in distance of the subject from the light source;

a video camera having an electronic imaging means adapted to have said dynamic optical image from the said optical input device applied as an input to the surface of said electronic imaging means of said video camera, said video camera being responsive to the dynamic optical image applied to said electronic imaging means for producing a video signal which includes a video information signal having said spikes of short durations of high intensity of reflected light from the subject;

an adjustable light intensity means including a drive motor positioned between said video camera electronic imaging means and said optical input device to dynamically vary the intensity of the optical image applied to the surface of said video camera electronic imaging means;

a light intensity level programming means for establishing a desired light intensity level at which said optical image is incident upon the surface of said electronic imaging means of the video camera and for producing a command reference signal; and

an automatic light intensity control circuit for receiving the video signal produced by said video camera, said automatic light intensity control circuit including

a low gain amplifying means responsive to the video information signal to produce a low level amplified video information signal having the spikes as a part thereof;

a weighted video peak response detector responsive to the amplified video information signal to produce a light intensity information signal having a level which is representative of the weighted peak average of the video information signal excluding the spikes; and

a feedback circuit including a comparator and means for applying a control current to said drive motor of the adjustable light intensity means, said comparator being adapted to receive as input signals thereto a command reference signal from the light intensity level programming means the light intensity information signal and a negative feedback signal, said comparator being responsive to the input signals for producing as an output therefrom a current control signal of a predetermined magnitude and direction and for applying said current control signal to said means for applying a control current to said drive motor to cause said drive motor to position said light intensity means relative to said surface of said electronic imaging means to increase the light intensity of the optical image incident upon the surface of the electronic imaging means of the video camera when the level of the light intensity information signal is less than the level of the command reference signal and to position said light intensity means relative to said surface of said electronic imaging means to decrease the light intensity of the optical image upon the surface of the electronic imaging means of the video camera when the level of the light information intensity signal is greater than the level of the command reference signal and to produce a negative feedback signal representing the magnitude and direction of said difference, said feedback circuit producing said control current signal in a magnitude and direction to dynamically control the direction and position of the drive motor to adjust the light intensity means to apply the optical image at substantially the same preselected light intensity on the surface of the electronic imaging means of the video camera independent of variations of reflected light from the subject.

4,300,168

TELEVISION CAMERA DEVICE

Kazuo Kawamura, Yokohama, Japan, assignor to Tokyo Shibaura Denki Kabushiki Kaisha, Tokyo, Japan

Filed Mar. 10, 1980, Ser. No. 128,584

Claims priority, application Japan, Mar. 9, 1979, 54-26779

Int. Cl.³ H04N *3/18*

U.S. Cl. 358—210 **4 Claims**

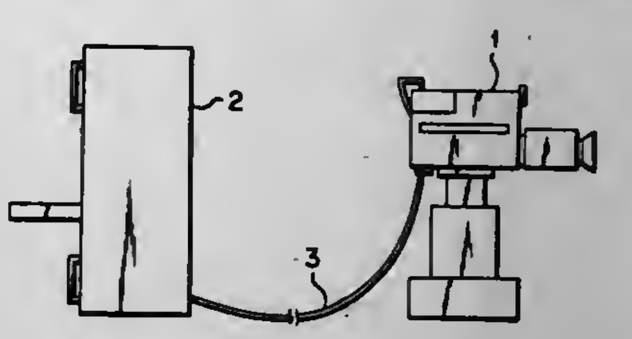

1. A television camera device comprising a camera control unit including a full-wave rectifier for forming a full-wave rectified voltage from a single-phase AC voltage, a camera cable connected at one end to said camera control unit for transmitting said full-wave rectified voltage, and a camera head including a power source unit connected to the other end of said camera cable for receiving said full-wave rectified voltage transmitted through said camera cable, said power source unit including a regulator unit for producing a plurality of smoothed DC voltages from said full-wave rectified voltage and an AC voltage generating unit for producing an AC voltage from said full-wave rectified voltage.

4,300,169

FACSIMILE OPERATION METHOD

Mitsuhiro Sato, Atsugi, Japan, assignor to Ricoh Company, Ltd., Tokyo, Japan

Filed Jul. 14, 1980, Ser. No. 168,604

Claims priority, application Japan, Jul. 19, 1979, 54/91929

Int. Cl.³ H04N *1/32, 1/22*

U.S. Cl. 358—256 **7 Claims**

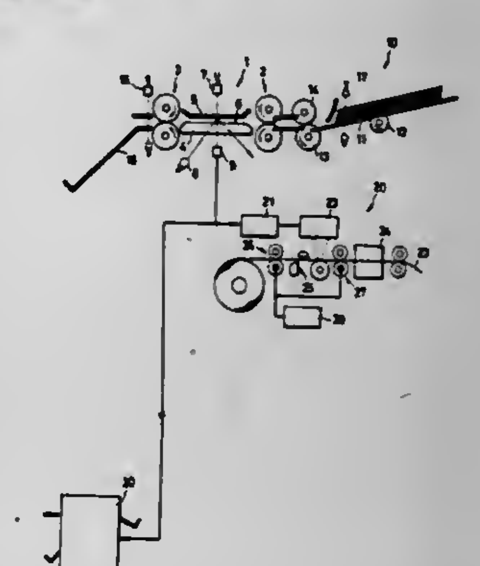

1. A facsimile operation method comprising the steps of:

reading an original document for transmission by a reading apparatus;

transmitting the image signals of said original document to a receiving side and, at the same time, transmitting part of image signals corresponding to the information appearing in part of said original document to a recording apparatus on the transmitting side; and

recording the images in said part of the original document on a record sheet by said recording apparatus.

4,300,170
PICTURE OUTLINE TRACING AND RECORDING MACHINE
Takashi Sakamoto, Kyoto, Japan, assignor to Dainippon Screen Seizo Kabushiki Kaisha, Kyoto, Japan
Filed Aug. 2, 1978, Ser. No. 930,382
Claims priority, application Japan, Aug. 19, 1977, 52-98735
Int. Cl.³ H04N *1/10, 1/22*
U.S. Cl. 358—293 **9 Claims**

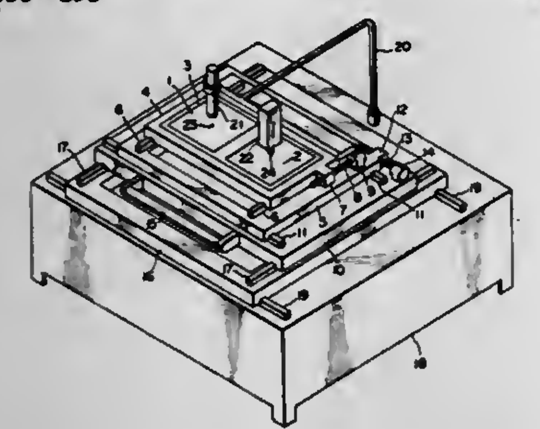

1. A picture outline tracing and recording machine, comprising: means for supporting an original picture bearing an outline; means for supporting a recording medium; an optical head sensitive to light from a restricted spot area on the original picture; a plurality of optical detecting elements included in the optical head, each of which receives light from a different part of the spot area, and each of which produces an output signal related to the light it receives; a processing head which records an outline on the recording medium; first displacing means which displaces the original picture with respect to the optical head and simultaneously displacing the recording medium with respect to the processing head in the same direction to the same extent; second displacing means controlled by control signals, which displaces the original picture with respect to the optical head and simultaneously displacing the recording medium with respect to the processing head in the same direction to the same extent, the total displacement of the original picture with respect to the optical head and of the recording medium with respect to the processing head being the sum of the displacements effected by said first and second displacing means; and a control means which processes the output signals form the optical detecting elements and produces the control signals, said control signals controlling said second displacing means so as to move said optical head with respect to said original picture so as to center said outline in said spot area so as to traverse the center of said spot area, when said outline falls in said spot area.

4,300,171
MAGNETIC RECORDING MEDIUM DIRECTION SENSING
Katsuichi Tachi, Ebina, Japan, assignor to Sony Corporation, Tokyo, Japan
Filed Mar. 29, 1979, Ser. No. 25,205
Claims priority, application Japan, Mar. 31, 1978, 53-37812
Int. Cl.³ H04N *5/795;* **G11B** *27/30*
U.S. Cl. 360—10 **4 Claims**

1. Apparatus for reproducing a video signal from a record medium in which each field of the video signal is recorded as a respective video track on the record medium, a frame code signal identifying the frame of the video signal recorded in each video track, a field code signal identifying the field of the video signal recorded in each video track, said field code signal including a bit which changes in level between each field and adjacent fields, said frame code signal including a bit which changes in level between each frame and adjacent frames, means for detecting said bit of said field code signal, means for detecting said bit of said frame code signal, and a direction sensing circuit receiving inputs from said means for detecting said bit of said field code signal and from said means for detecting said bit of said frame code signal and producing an output

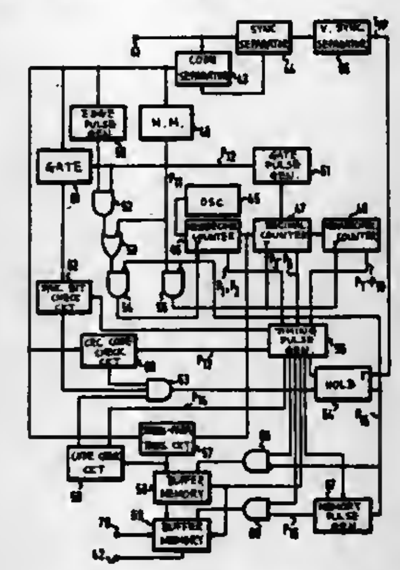

signal indicative of the transport direction of said record medium.

4,300,172
PLAYBACK SYSTEM WITH AMPLITUDE CORRECTION FOR FREQUENCY MODULATED SIGNALS
Josef Sochor, Darmstadt; Winfried Horstmann, Griesheim, and Hubert Foerster, Darmstadt-Eberstadt, all of Fed. Rep. of Germany, assignors to Robert Bosch GmbH, Stuttgart, Fed. Rep. of Germany
Filed Mar. 15, 1979, Ser. No. 20,730
Claims priority, application Fed. Rep. of Germany, Mar. 25, 1978, 2813207
Int. Cl.³ H04N *5/79, 5/795*
U.S. Cl. 360—33 **3 Claims**

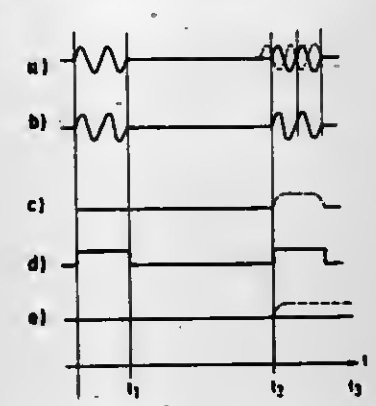

1. In a playback system having record carrier means having frequency modulated signals recorded thereon at a recording speed, and scanning means for scanning said record carrier means at a playback speed and furnishing output signals corresponding to said frequency modulated signals, a system for correcting said output signals for undesired changes resulting from differences between said playback speed and said recording speed, comprising

means (8, 10, 11, 12, 13) for measuring frequency deviations in said output signals resulting from said differences in said recording and playback speeds and furnishing a frequency deviation signal corresponding to the so-measured deviation;

variable gain amplifier means (9) connected to said scanning means for amplifying said output signals;

and means (14) interconnected between said measuring means and said variable gain amplifier means for changing the gain of said variable amplifier means in response to said frequency deviation signal and in a direction opposing said undesired changes.

4,300,173
DATA RECORDING AND READING CIRCUITRY
Murray T. Harris, Sunnymead, and Curtis D. Solheim, Yorba Linda, both of Calif., assignors to The Perkin-Elmer Corporation, Norwalk, Conn.
Filed Feb. 1, 1980, Ser. No. 117,695
Int. Cl.³ G11B *5/09*
U.S. Cl. 360—51 **8 Claims**

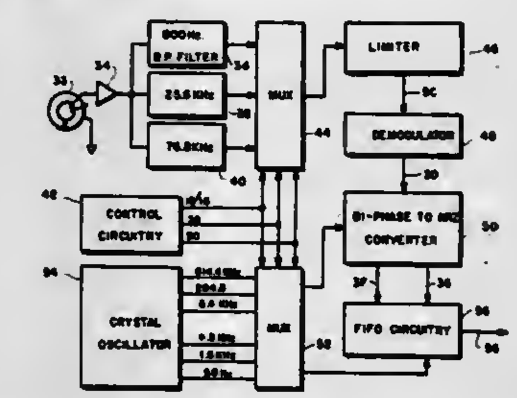

1. Data reading circuitry for removing mechanically induced flutter from first binary data signals recorded on mechanically driven recording media, said circuitry comprising:

transducing means positionable with respect to said recording media for sensing data signals recorded thereon and for producing corresponding electrical data signals;

signal processing circuitry coupled to said transducing means for forming said electrical data signals into second binary data signals similar to the originally recorded first binary data signals but subject to mechanically induced flutter;

clock generating circuitry associated with said signal processing circuitry for deriving first clock pulses from said electrical data signals;

oscillator means for providing precisely timed second clock pulses; and

correcting circuitry including a first-in-first-out register coupled to said signal processing circuitry and responsive to said first and second clock pulses for receiving said second binary data signals in accordance with said first clock pulse rate and for clocking out said second binary data signals at said second clock pulse rate.

4,300,174
GUARD BAND CONTROL FOR MAGNETIC DISKS
Jefferson H. Harman, Thousand Oaks, and G. Randall Stevens, Inglewood, both of Calif., assignors to PerSci, Inc., Los Angeles, Calif.
Filed Dec. 21, 1979, Ser. No. 105,894
Int. Cl.³ G11B *21/08*
U.S. Cl. 360—78 **12 Claims**

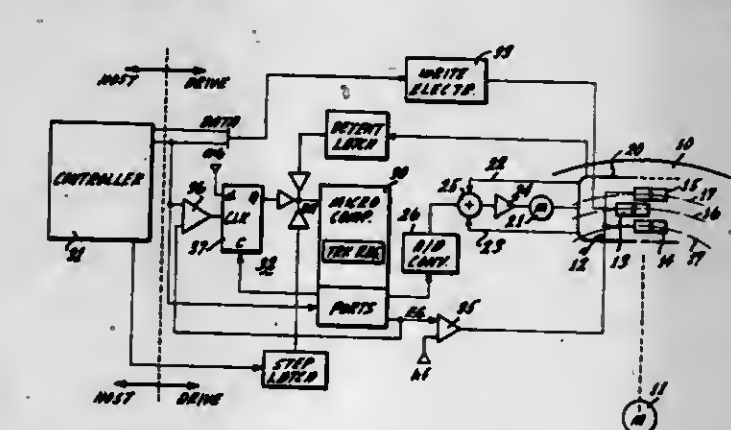

1. In a disk drive system, in which a spinning magnetizable disk cooperates with radially positionable transducer means, which include an information write transducer next to which are positioned two guard band writing transducers whose gaps are disposed downstream from the gap of the information write transducer taken in relation to the spinning disk, the drive system provided for cooperation with a host equipment which furnishes data and a write gate signal accompanying the data flow, the drive system having means for receiving the write gate signal and means responsive to the data when furnished and operating the informtion with transducers, the improvement comprising:

a microcomputer, having interrupt inputs means further having storage means which contain numerical information identifying a track on the disk with which the information write transducer interacts;

first circuit means connected to the means for receiving the write gate signal and providing an interrupt into the interrupt input means each time the write gate signal changes;

program means included in the microcomputer and responsive to the interrupt and to the track identifying numerical information for generating a delay which is relatively shorter for a larger diameter of any of the tracks above which the write transducer is disposed, the delay being further depending upon whether the interrupt was caused by the beginning or by the end of the write gate signal; and

means, including the microcomputer and being responsive to the delay as generated, for generating a control signal in the guard band transducers, the control signal having a track-variable phase in relation to the write gate signal, depending upon the delay as respectively produced by the microcomputer following the write gate signal beginning or end.

4,300,175
TAPE RECORDER WITH ADAPTER FOR READING A CARD
Shoichi Saito, No. 2-49-13, Minamidai, Nakano ku, Tokyo, Japan
Filed Dec. 3, 1979, Ser. No. 99,923
Claims priority, application Japan, Dec. 5, 1978, 53-150870
Int. Cl.³ G11B *25/10, 15/60*
U.S. Cl. 360—94 **4 Claims**

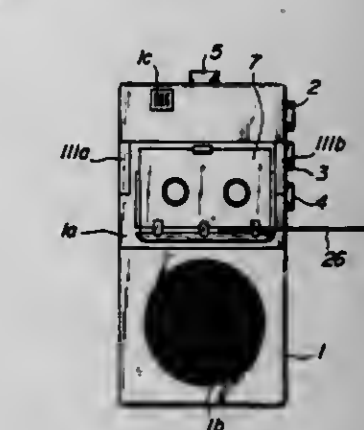

1. A cassette tape recorder which is adaptable for reading a strip of magnetic tape secured to the surface of a card, comprising a tape recorder body forming a cassette chamber for receiving a tape cassette, a magnetic head having a front operating surface and a rear surface, said head being mounted on said body for movement into and out of the chamber to contact a tape in the chamber on the front surface of said head when said head is moved into the chamber, a tape guide mounted on said body for movement into and out of the chamber for guiding a tape contained in a cassette in the chamber in operative alignment with the front surface of said head when said tape guide is moved into the chamber to a position at which a projecting part or said tape guide extends forwardly of the front surface of said head, a pinch roller mounted for cooperative movement with said head to contact a tape in the chamber and for causing the tape to be driven past said head, and an adapter insertable in the chamber for enabling said head to read a strip of magnetic tape secured to a card surface, said adapter including a peripheral part which has a guide groove for receiving the

card including the tape strip and for guiding the card for operative movement over the front surface of said head, said peripheral part being arranged to face said head, said tape guide and said pinch roller when said adapter is inserted in the chamber, said adapter having at least one opening communicating with said guide groove for allowing said head and said pinch roller to be inserted in said guide groove to contact the card including the tape strip, said peripheral part including an edge arranged to contact said projecting part of said tape guide and to prevent movement of said tape guide into the region of said guide groove so that said projecting part is positioned toward the rear surface of said head away from the front surface of said head when said head and said pinch roller are inserted in said guide groove of said adapter.

4,300,176

FIXED DISC HEAD ACTUATOR ASSEMBLY

Paul A. Gilovich, Saratoga, and Joseph S. Tung, Morgan Hill, both of Calif., assignors to Microcomputer Systems Corp., Sunnyvale, Calif.

Filed Jun. 4, 1979, Ser. No. 45,430

Int. Cl.³ G11B *21/02*

U.S. Cl. 360—105 **10 Claims**

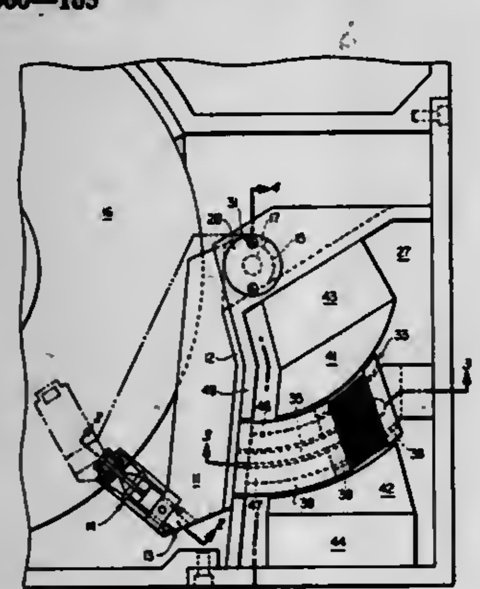

1. A head actuator assembly for fixed disc memories comprising

a pivot assembly,

an elongated head support including a plurality of arms adapted to support heads having one end pivotally mounted on said pivot assembly and extending from said pivot assembly with the other end adapted to cooperate with the fixed discs,

coil support means extending outwardly from one side of said elongated head support between the said ends, of said elongated head support

a coil wound on said coil support means, and

means including at least one permanent magnet providing a magnetic field in which said coil may move in a direction to cause said coil support means to move and rotate said elongated head support about said pivot assembly whereby when said coil is energized it provides a motive force to the one side of the elongated head support to drive the arms and position the associated heads with respect to the disc.

4,300,177

THIN-FILM MAGNETIC HEAD FOR READING AND WRITING INFORMATION

Gerrit J. Koel; Frederik W. Gorter, and Jan T. Gerkema, all of Eindhoven, Netherlands, assignors to U.S. Philips Corporation, New York, N.Y.

Division of Ser. No. 857,774, Dec. 5, 1977, Pat. No. 4,150,408, which is a division of Ser. No. 705,050, Jul. 14, 1976, Pat. No. 4,100,583. This application Jan. 4, 1979, Ser. No. 1,045

Claims priority, application Netherlands, Jul. 17, 1975, 7508533

Int. Cl.³ G11B *5/12, 5/30*

U.S. Cl. 360—113 **4 Claims**

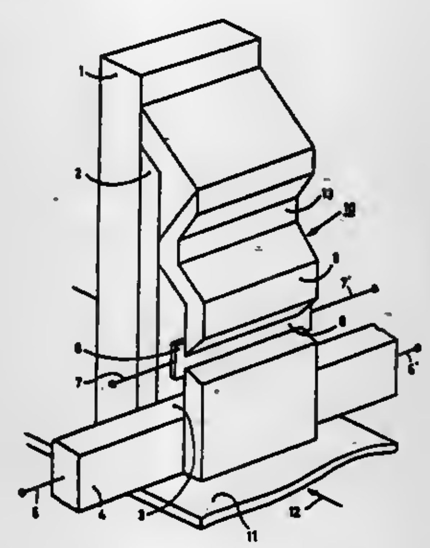

1. A thin-film magnetic head for reading information from and writing information in a track of an associated magnetic recording medium, comprising a magnetically permeable yoke having only first and second limbs, means coupled to said yoke for applying a writing current, a magneto-resistive reading element bridging an intermediate gap between said limbs, a writing/reading gap being formed between the free ends of said limbs, said limbs ends overlapping each other laterally at the area of the writing/reading gap said limbs, in a place spaced from the site of overlap, defining the intermediate gap.

4,300,178

MULTICHANNEL MAGNETIC HEAD

Sinichi Saiton, Hachioji, and Misao Shimoda, Tokyo, both of Japan, assignors to Olympus Optical Co., Ltd., Tokyo, Japan

Filed Dec. 28, 1978, Ser. No. 973,964

Claims priority, application Japan, Feb. 27, 1978, 53-21788

Int. Cl.³ G11B *5/28, 5/25*

U.S. Cl. 360—121 **3 Claims**

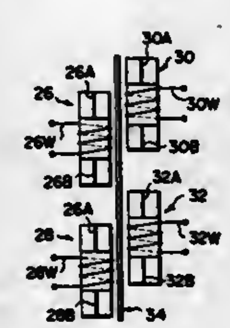

1. A multi-channel magnetic head for contacting a magnetic tape having a recording face, comprising: a core housing having an elongated head face, and a plurality of U-shaped cores arranged in said housing, each core being wound by an exciting coil and the free ends of each said cores defining a pair of spaced legs for contacting at their free ends the recording face, said U-shaped cores being arranged in two parallel rows on opposite sides of a line extending essentially along the center of said elongated face, the space between the legs of one and the same core being substantially the same as the width of the legs,

the legs of one and the same core being on the same side of said line, and staggered with respect to the legs of an adjacent core on the opposite side of said line, so that each leg engages a different track of the tape.

4,300,179

COMPOSITE MAGNETIC HEAD WITH MULTITRACK SUPPORT STRUCTURE

Charles A. Barnes, St. Paul Park, and Robert A. von Behren, Lilydale, both of Minn., assignors to Minnesota Mining and Manufacturing Co., St. Paul, Minn.

Filed Sep. 4, 1979, Ser. No. 72,242

Int. Cl.³ G11B *5/22, 5/12, 5/20*

U.S. Cl. 360—127 **17 Claims**

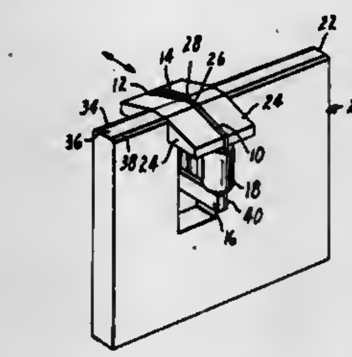

1. A composite magnetic head adapted to record and read records to and from a record carrier movably contacting said composite magnetic head, comprising:

a ferrite core having a substantially U-shape having two legs and a base with an effective gap at the base of said U-shape, said ferrite core having a scrub surface where said record carrier contacts said ferrite core; and

a yoke receiving said ferrite core and having a surface coplanar with said scrub surface of said ferrite core and extending in both directions transversely to the direction of motion of said record carrier at least a distance equal to the width of said record carrier;

whereby said record carrier is physically supported by said composite magnetic head when said composite magnetic head is moved transverse to the direction of movement of said record carrier.

4,300,180

AMORPHOUS SPRING-SHIELD FOR TAPE CASSETTE

Gregory J. Sellers, Richmond, Va.; Kevin J. Durand, New Providence, and Gerald R. Bretts, Livingston, both of N.J., assignors to Allied Chemical Corporation, Morris Township, Morris County, N.J.

Filed Dec. 27, 1979, Ser. No. 108,186

Int. Cl.³ G11B *15/60, 5/11*

U.S. Cl. 360—130.33 **4 Claims**

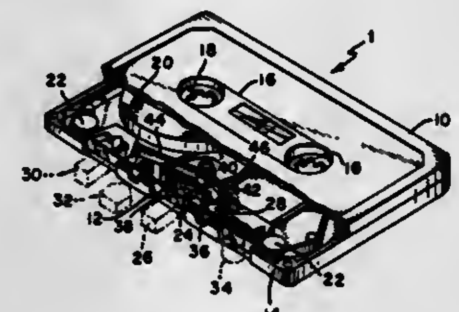

1. A magnetic tape cassette comprising:

(a) housing having an opening in a peripheral wall thereof;

(b) winding means including a winding core having a magnetic tape wound thereon;

(c) guide means for leading said tape from said winding core past said opening;

(d) cushion means for holding said tape against a magnetic head projected into said opening; and

(e) biasing and shielding means for pressing said cushion means against said tape and shielding said head against disturbing magnetic fields in the vicinity thereof, said biasing and shielding means being a unitary strip composed of flexible, ferromagnetic material having at least 50% glassy structure, said ferromagnetic material having a maximum permeability of at least 30,000 and the formula $(Ta_xTb_{1-x})_MBa_{1-M}$ where Ta is at least one of iron and cobalt, Tb is selected from the group consisting of nickel, molybdenum, vanadium, chromium, copper and mixtures thereof, Ba is at least one of boron, phosphorous, carbon, silicon, nitrogen, germanium and aluminum, X ranges from about 20 to 100 atom percent, and M ranges from about 70-90 atom percent.

4,300,181

COMMUTATION CIRCUIT FOR AN HVDC CIRCUIT BREAKER

William J. Premerlani, Scotia, N.Y., assignor to General Electric Company, Schenectady, N.Y.

Filed Nov. 28, 1979, Ser. No. 98,219

Int. Cl.³ H02H *3/00*

U.S. Cl. 361—4 **20 Claims**

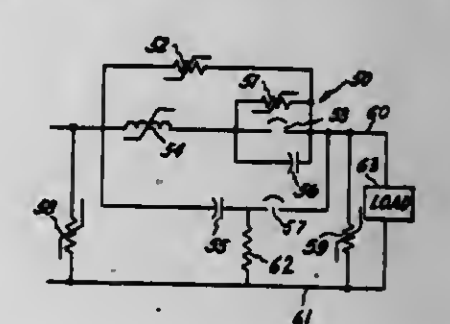

1. An interrupter for interrupting a high voltage direct-current circuit which comprises a DC source having a pair of terminals, first and second electrical conductors, respectively, connected to said terminals, and a load connected across said conductors, comprising:

a main circuit breaker connected in said first electrical conductor in series with said load and between a first one of said terminals and said load; and

a normally-open commutating circuit connected across said main circuit breaker comprising:

means for suppressing voltage surges connected across said main circuit breaker;

a snubber capacitor connected across said main circuit breaker;

a series combination including a commutation reactor and means for absorbing energy connected across said snubber capacitor;

a series combination including a commutation capacitor and an initiation switch connected across said means for absorbing energy; and

means for charging said commutation capacitor connected and maintaining said commutation capacitor precharged during normal closed contact operation of said main breaker.

4,300,182

METERING AND PROTECTION SYSTEM FOR AN A.C. POWER SYSTEM

Edmund O. Schweitzer, III, 10 University Heights, Athens, Ohio 45701

Filed Aug. 9, 1979, Ser. No. 65,158

Int. Cl.³ H02H *3/00*

U.S. Cl. 361—79 **22 Claims**

1. A metering system for electronically metering an A.C. electrical power system of predetermined frequency to deter-

mine real and reactive power in the system, said metering system comprising:

voltage sensing means adapted to sense voltage in the power system, said voltage sensing means further adapted to provide an output signal proportional to said voltage;

current sensing means adapted to sense current in the power system, said current sensing means further adapted to provide an output signal proportional to said current;

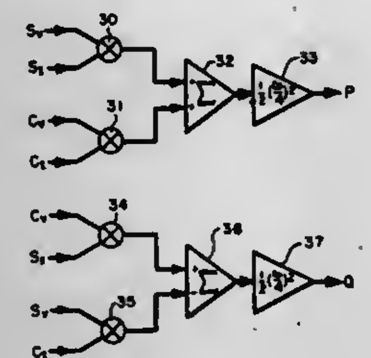

first and second filtering means for separately sampling respective ones of said voltage and current output signals at least once during each period of said power system to develop respective Walsh function correlation coefficient output signals for each of said voltage and current output signals; and

combining means for combining said Walsh function correlation coefficient output signals to determine real and reactive power parameters of the power system.

4,300,183

METHOD AND APPARATUS FOR GENERATING ALTERNATING MAGNETIC FIELDS TO PRODUCE HARMONIC SIGNALS FROM A METALLIC STRIP

Robert H. Richardson, 8361 Sylvan Dr., Melbourne, Fla. 32901

Filed Mar. 27, 1980, Ser. No. 134,684

Int. Cl.³ H01H *47/32*

U.S. Cl. 361—152 **11 Claims**

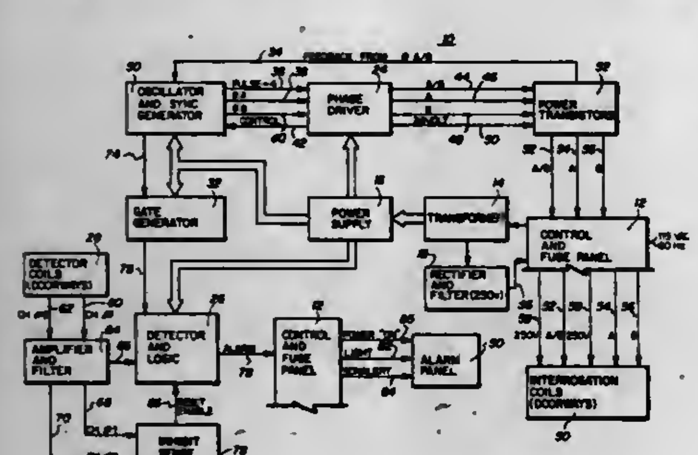

1. Apparatus for generating an alternating magnetic field in a detection zone to produce harmonic signals from a metallic strip therein, comprising:

a first and a second coil of conductive material, each of said coils configured to have a plurality of essentially linear segments, a first group of said segments having each one thereof oriented at an acute angle relative to horizontal and a second group of said segments each one thereof oriented essentially vertically, said first and said second coils spaced apart to form the detection zone therebetween,

means for producing an alternating current in said first coil, and

means for producing in said second coil an alternating current which alternates between being in-phase and out-of-phase with the current in said first coil.

4,300,184

CONFORMAL COATING FOR ELECTRICAL CIRCUIT ASSEMBLIES

Jeannine O. Colla, Whitefish Bay, Wis., assignor to Johnson Controls, Inc., Milwaukee, Wis.

Filed Jul. 11, 1979, Ser. No. 56,505

Int. Cl.³ H05K *3/28*

U.S. Cl. 361—397 **6 Claims**

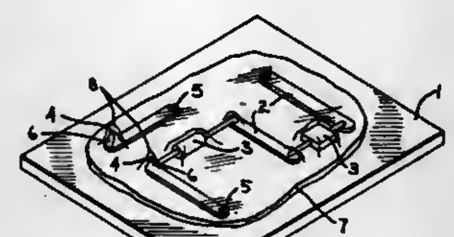

1. An electrical circuit assembly, comprising a base support with a plurality of electrical circuit components attached thereto and having circuit connections including conductive projections extending outwardly from the surface of the base support; a transparent coating of an insulating material applied to the base and covering circuit connections including said projections, said insulating material applied directly to the base and covering said circuit connections including said projections, said insulating material comprising a single component active insulating material which is essentially transparent and a minor portion of a thickening powder to maintain the electrical insulation of the covered components in a high humidity environment, said thickening powder being a powdered material having particles which are essentially submicron sized and establishing hydrogen bonding with said single component active insulating material.

4,300,185

LIGHT FIXTURE UNIT FOR OPEN PLAN OFFICE

Jack K. Wakamatsu, Los Angeles, Calif., assignor to C. W. Cole & Company, Inc., South El Monte, Calif.

Filed Dec. 7, 1979, Ser. No. 101,224

Int. Cl.³ A61G *13/00*

U.S. Cl. 362—33 **9 Claims**

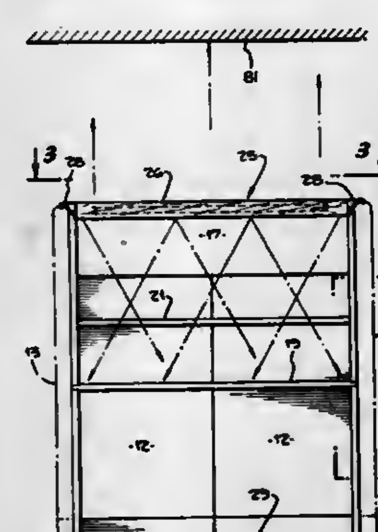

1. A lighting arrangement for a work station in an open plan office, the combination comprising:

a horizontal work surface;

an elongated light fixture supported above said work surface at a height higher than the eye height of a person seated adjacent the front edge of the work surface but not at a height substantially higher than the eye height of a person standing adjacent thereto;

said light fixture including an elongated light source having a longitudinal axis located substantially directly above and aligned with the front edge of the work surface; and

said light fixture including a reflector and a control lens for directing the light from said light source over the work surface downwardly and rearwardly of the front edge thereof thereby preventing the formation of veiling reflections from the work surface towards a person seated adjacent the front edge of the work surface and facing to view a task thereon.

4,300,186

SAFETY LIGHT

Wayne Hurd, 12700 N.W. 8 Ave., Miami, Fla. 33168

Filed Jan. 28, 1980, Ser. No. 116,146

Int. Cl.³ B60Q *1/06*

U.S. Cl. 362—66 **9 Claims**

1. A safety light for use in combination with a motor vehicle to which said safety light is installed, and which vehicle has a floor; said safety light comprising:

an elongate vertically extending telescoping tubular support having a vertical axis and a top and a bottom end, said support being connected to the floor of a motor vehicle in a vertical attitude,

means for illuminating a designated area fixedly connected to the top end of the support including mounting means for rotation of said means for illuminating with respect to the axis,

said illumination means comprising a vertical member having a top end and a bottom end, the top end comprising a search light and the bottom end comprising said mounting means and including a connection zone for rotatably connecting the illuminating means to the top end of the support, and means swingably connecting said search light for rotation about an axis perpendicular to the axis of the vertical support,

a first drive means for extending the support in a vertical direction along the vertical axis in relation to the vehicle,

a second drive means for swinging and rotating the search light in relation to the vertical support,

the tubular support including wiring means for the illumination means and second drive means; and

means to electrically connect the second drive means and the illumination means to the electrical system of the motor vehicle.

4,300,187

ADJUSTABLE FLOODLIGHT REFLECTOR

Thomas A. Fletcher, Dana, N.C., assignor to General Electric Company, Schenectady, N.Y.

Filed Dec. 17, 1979, Ser. No. 104,092

Int. Cl.³ F21S *3/00*

U.S. Cl. 362—223 **8 Claims**

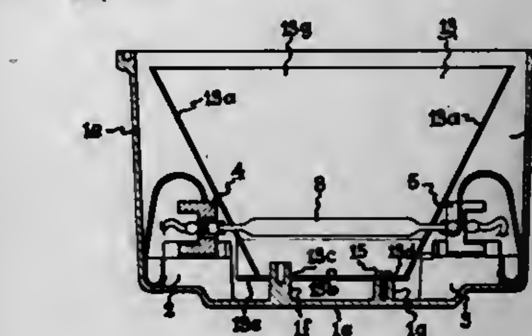

1. A floodlight comprising, in combination, a housing having a rear wall and side walls defining an interior chamber and a front opening, said rear wall of said housing having different portions arranged at different distances from said front opening, a reflector fitting within said housing chamber and having a rear portion arranged adjacent said housing rear wall, said reflector being selectively positioned in said housing with its rear portion resting alternatively on one of said different portions of said housing rear wall, means for securing said reflector in selected position, and means for mounting a light source in said housing between said reflector and said front opening, whereby said reflector is adjustable to different positions relative to the light source for varying the light distribution of the floodlight.

4,300,188

DETACHABLE LAMP ASSEMBLY

Aldo Addario, 68 Perry Ave., Shelton, Conn. 06484

Filed Oct. 1, 1979, Ser. No. 81,088

Int. Cl.³ H01R *33/00*

U.S. Cl. 362—226 **10 Claims**

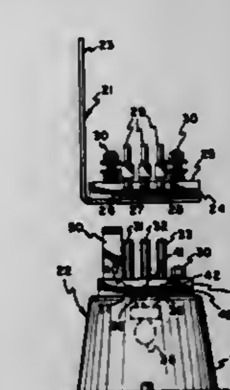

1. A detachable light system for mounting to vehicles comprising

A. a lamp assembly incorporating
   a. a lamp housing,
   b. illuminating means contained within the housing, and
   c. a plug connector subassembly mounted to the housing;

B. a support assembly incorporating
   a. a bracket adapted for mounting to the vehicle, and
   b. a connector assembly mounted to the bracket and incorporating
      1. corrosion resistant contact means matingly cooperating with the connector of the lamp assembly and adapted for rapid electric engagement and disengagement of the lamp assembly therewith, and
      2. corrosion resistant contact support means; and

C. latch means
   a. mounted to the light system for cooperative locking interengagement of the lamp assembly and support

assembly when the lamp assembly is matingly interconnected with the support assembly, and

b. easily disengageable from its locked position,

whereby the lamp assembly is capable of quick and easy installation and automatic locking engagement with the support assembly as well as rapidly disengageable therefrom.

4,300,189

SEALED BEAM LAMP UNIT HAVING BONDED TERMINALS

Bruce E. Shanks, Chesterland, Ohio, assignor to General Electric Company, Schenectady, N.Y.

Filed Dec. 21, 1979, Ser. No. 105,955

Int. Cl.³ F21V *7/00*

U.S. Cl. 362—267 **15 Claims**

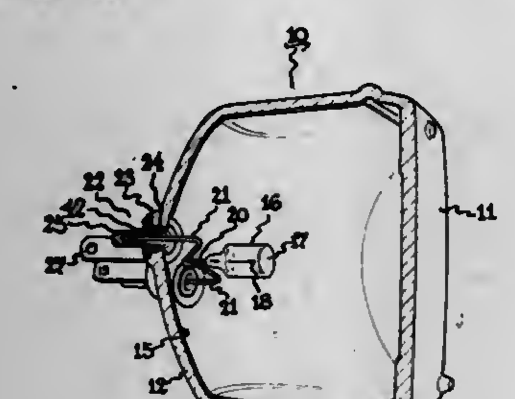

1. A sealed beam lamp unit having a bonded lamp terminal comprising:

a lamp envelope including a configured reflector portion sealed to a light-transmissive lens,

at least one lamp terminal, encased in sealant and inserted through a wall of said envelope, comprising a hollow closed end eyelet having an anterior rim abutting the interior surface of said envelope, and a posterior portion which engages a lug abutting the exterior surface of said envelope,

a light source disposed within said envelope and electrically connected and structurally supported by at least two lead wires at least one of which terminates within and is structurally and electrically secured to said lamp terminal.

4,300,190

LIGHTING FIXTURE MOUNT

James M. Mershon, Crawfordsville, Ind., assignor to National Service Industries, Atlanta, Ga.

Filed Dec. 12, 1979, Ser. No. 102,885

Int. Cl.³ F21S *1/04*

U.S. Cl. 362—404 **9 Claims**

1. A mounting for attaching a lighting fixture to a surface comprising a bracket having a T-shaped flat, a mating plate having a slot adapted to receive said bracket, means attaching said bracket to one of the lighting fixture and the surface, means attaching said mating plate to the other of the lighting fixture and the surface, means for interconnecting said T-shaped flat with said mating plate for suspending the lighting fixture below the surface, and releasable means for locking said bracket to said mating plate to suspend the lighting fixture from the surface.

4,300,191

PULSE WIDTH MODULATED CURRENT FED INVERTER POWER SUPPLY

Conrad J. Baranowski, Westford, and Joel T. Bedell, Chelmsford, both of Mass., assignors to Powercube Corporation, Billerica, Mass.

Filed Jan. 31, 1980, Ser. No. 117,208

Int. Cl.³ H02P *13/22*

U.S. Cl. 363—17 **3 Claims**

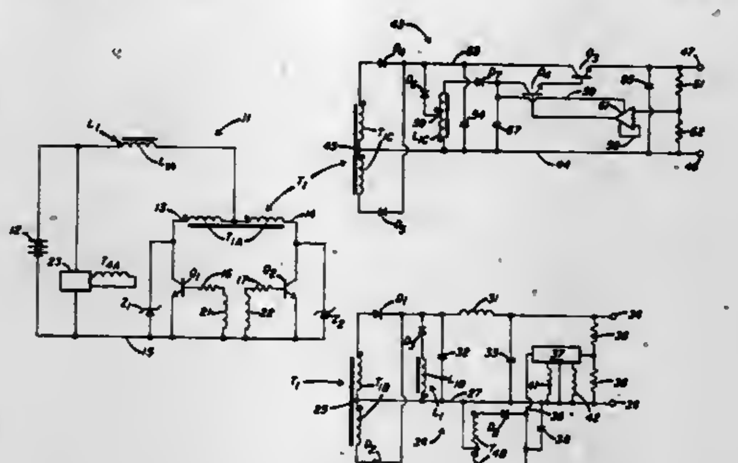

1. A power supply comprising: an inverter input circuit comprising: a power transformer primary winding; a source of DC voltage; means for switching said transformer primary winding on and off by intermittently connecting and disconnecting said source thereto; an inductor primary winding connected between said source and said transformer primary in such a manner to make said input circuit a current fed inverter; a first output circuit comprising: a first secondary winding of said power transformer; means for rectifying the output of said power transformer secondary winding; first output terminals; first means for connecting the rectified output of said power transformer secondary winding to said output terminals; and a first flyback circuit connected to said first connecting means, said flyback circuit comprising a first secondary winding of said inductor; and means coupled between said output terminals and said switching means to provide pulse width modulation to said power transformer; and a second output circuit comprising: a second secondary winding of said power transformer; means for rectifying the output of said second power transformer secondary winding; second output terminals; second means for connecting the rectified output of said second power transformer secondary winding to said second output terminals; and a second flyback circuit connected to said second connecting means, said second flyback circuit comprising a second secondary winding of said inductor, whereby regulation of output from said second output circuit is promoted even when said first output circuit is lightly loaded.

4,300,192

METHOD AND MEANS FOR STORING AND ACCESSING INFORMATION IN A SHARED ACCESS MULTIPROGRAMMED DATA PROCESSING SYSTEM

John F. Couleur, Scottsdale, and Robert F. Montee, Phoenix, both of Ariz., assignors to Honeywell Information Systems Inc.

Continuation of Ser. No. 462,144, Apr. 18, 1974. This application Nov. 14, 1978, Ser. No. 960,574

Int. Cl.³ G06F *9/46, 13/00*

U.S. Cl. 364—200 **5 Claims**

5. The method of storing and accessing information in the memory of a shared access, multiprogrammed data processing system employing a plurality of descriptor words containing

relative addresses for defining the location of a plurality of data storage segments within said system memory, each said relative address including a partition code for accessing a partition page table and a base code for deriving an absolute address from said page table, said method comprising the steps of:

storing in first and second segments of said memory a plurality of descriptor words identifying selected memory segments containing data required for execution of a first data processing system;

loading in first and second descriptor registers descriptor words identifying said first and second segments, respectively, when said first program is to be executed;

executing said first program by inserting descriptor words from said first segment into operand descriptor register means to access information called for by said program, the relative address data contained in the descriptors inserted into said operand register means being converted into absolute address data to enable accessing of specific storage cells in said memory;

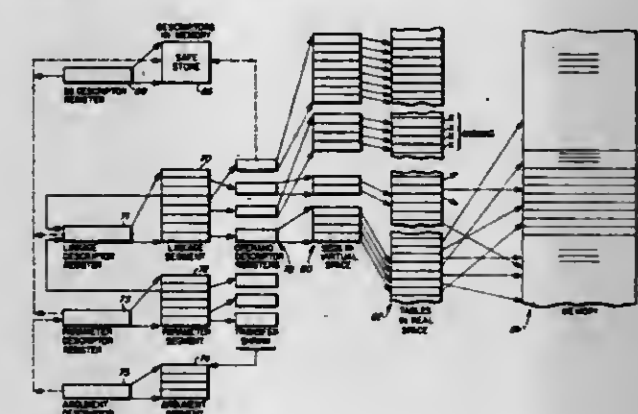

storing in a third segment of said memory, during execution of said first program, descriptor words identifying memory segments containing data required for execution of a second data processing program;

storing in a third descriptor register a descriptor word identifying said third data storage segment;

conditioning said system to execute said second program by storing in said first descriptor register said descriptor word in said third descriptor register, thereby causing and third data storage segment to become said first data storage segment;

executing said second program by inserting descriptor words from said first segment into said operand descriptor register means to enable accessing of specific storage cells in said memory; and

inserting into said operand register means only descriptor words contained in the memory segments defined by the descriptors stored in said first descriptor register during the execution of said first and second programs to provide secure memory accessing.

4,300,193

DATA PROCESSING SYSTEM HAVING DATA MULTIPLEX CONTROL APPARATUS

John J. Bradley, Framingham; Robert C. Miller, Braintree; Ming T. Miu, Chelmsford; Jian-Kuo Shen, Watertown, and Theodore R. Staplin, Jr., Chelmsford, all of Mass., assignors to Honeywell Information Systems Inc., Waltham, Mass.

Filed Jan. 31, 1979, Ser. No. 8,003

Int. Cl.³ G06F *3/00*

U.S. Cl. 364—200 **20 Claims**

1. A data processing system comprising a main memory capable for storing a plurality of data words, each of said data words being addressed by a unique memory address, a central processing unit (CPU) coupled to said main memory, at least one input/output controller (IOC), said CPU and said at least one IOC coupled to a common bus for the transfer of information between said CPU and said at least one IOC during information transfer cycles, said CPU further comprising:

A. first means, included in said CPU, for receiving an IOC identification signal via said common bus from a one IOC of said at least one IOC, said IOC identification signal for identifying said one IOC of said at least one IOC desiring to make a transfer of a single unit of data between said one IOC and said main memory, said IOC identification signal being generated by said one IOC in response to an answer request signal;

B. second means, included in said CPU and coupled to said first means, for receiving data via said common bus from said one IOC and transferring it to said main memory or for receiving data from said main memory and transferring it via said common bus to said one IOC in response to said IOC identification signal;

C. control means, included in said second means, for controlling the execution of software instructions and said transfer of said single unit of data between said at least one IOC and said main memory;

D. hardware interrupt means, included in said second means

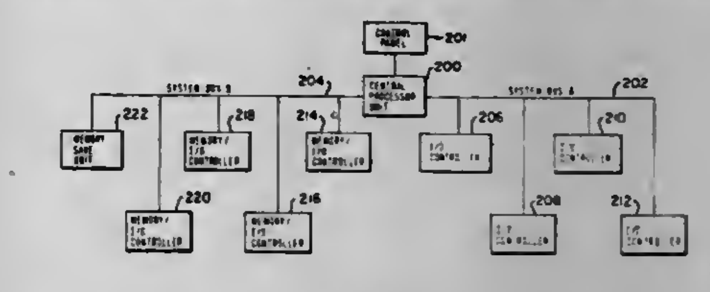

SYSTEM CONFIGURATION

and coupled to said control means, for responding to a transfer request signal from said one IOC by interrupting the execution of software instructions by said control means and causing said control means to send said answer request signal to said one IOC; and

E. grant means, included in said control means and coupled to said common bus, for sending said grant signal via said common bus to said one IOC to indicate that said control means and said common bus are dedicated to said transfer of said single unit of data between said one IOC and said main memory, whereby said control means at any moment is either controlling the execution of software instructions or said transfer of said single unit of data such that said transfer of said single unit of data temporarily suspends the execution of software instructions and whereby, once a transfer of a block of one or more of said single units of data is initiated by a software instruction, each transfer of said single unit of data occurs asynchronously from the execution of any software instruction.

4,300,194

DATA PROCESSING SYSTEM HAVING MULTIPLE COMMON BUSES

John J. Bradley, Framingham; Ming T. Miu, Chelmsford, and Jian-Kuo Shen, Watertown, all of Mass., assignors to Honeywell Information Systems Inc., Waltham, Mass.

Filed Jan. 31, 1979, Ser. No. 8,004

Int. Cl.³ G06F *3/04*

U.S. Cl. 364—200 **14 Claims**

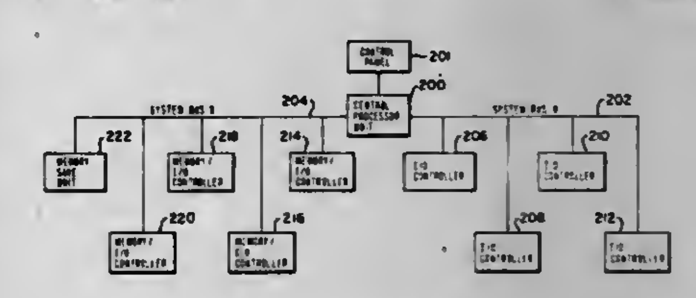

SYSTEM CONFIGURATION

1. A system comprising:

A. a bus controller;

B. a plurality of common buses, coupled to said bus controller,

said plurality of common buses for the bidirectional transfer of information;
C. a plurality of units, each unit of said plurality of units coupled to one bus of said plurality of common buses;
D. a first unit of said plurality of units, coupled to a first bus of said plurality of common buses, said first unit for sending information to a second unit of said plurality of units during a first transfer cycle on said plurality of common buses;
E. said second unit of said plurality of units for receiving information from said first unit of said plurality of units during said first transfer cycle, said second unit being identified by address information included in said information transmitted by said first unit on said first bus; and
F. first means, included in said bus controller, for allocating said plurality of common buses to said first unit and for receiving information from said first bus and transmitting it to all but said first bus of said plurality of said common buses, thereby allowing said first unit to send information to said second unit during said first transfer cycle wherein said second unit can be coupled to said first bus or to another bus of said plurality of common buses without requiring said first unit or said bus controller to know to which bus of said plurality of common buses such second unit is coupled.

4,300,195
CMOS MICROPROCESSOR ARCHITECTURE
Kuppuswamy Raghunathan, and Philip S. Smith, both of Austin, Tex., assignors to Motorola, Inc., Schaumburg, Ill.
Filed Aug. 9, 1979, Ser. No. 65,294
Int. Cl.³ G06F *9/06*
U.S. Cl. 364—200 **9 Claims**

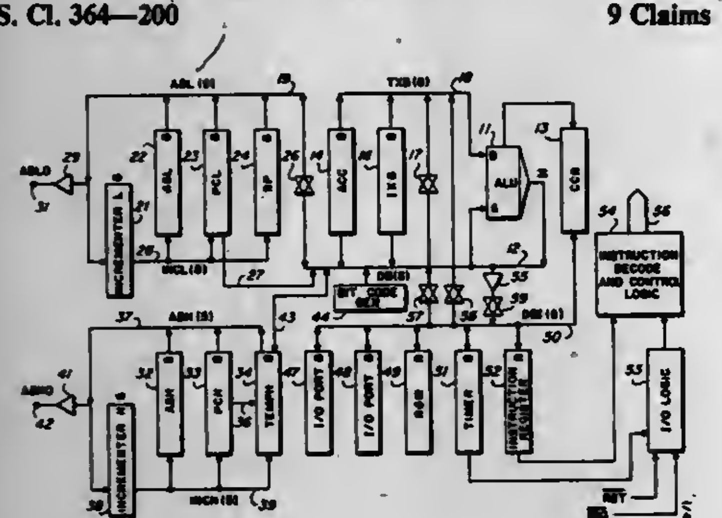

1. A CMOS microprocessor comprising:
a data bus;
a transfer bus;
an arithmetic logic unit having a first input coupled to the data bus, a second input coupled to the transfer bus, and an output coupled to the data bus;
an index register having inputs and outputs coupled to the data bus and to the transfer bus;
an accumulator register having inputs and outputs coupled to the data bus and to the transfer bus;
a first address bus;
first switching means for selectively coupling the first address bus to the data bus;
a first incrementer bus;
a first incrementer having an input coupled to the first address bus, and an output coupled to the first incrementer bus;
a stack pointer register having an input coupled to the first incrementer bus, and an output coupled to the first address bus;
a first program counter register having an input coupled to the first incrementer bus, a first output coupled to the first address bus, and a second output coupled to the data bus;
a first address store register having an input coupled to the first incrementer bus, and an output coupled to the first address bus;
a second address bus;
a second incrementer bus;
a second incrementer having an input coupled to the second address bus, and an output coupled to the second incrementer bus;
a second address store register having an input coupled to the second incrementer bus, and an output coupled to the second address bus;
a second program counter register having an input coupled to the second incrementer bus, and an output coupled to the second address bus;
a temporary storage register having inputs coupled to the second incrementer, to the second program counter, and to the data bus, and outputs coupled to the second address bus and to the data bus;
an internal data bus;
a condition code register having inputs coupled to the arithmetic logic unit and to the internal data bus, and an output coupled to the internal data bus;
second switching means for selectively coupling the internal data bus to the data bus;
input/output means for selectively coupling the internal data bus to devices external to the microprocessor;
an instruction register having an input coupled to the internal data bus, and an output;
instruction decode and control means coupled to the output of the instruction register, for controlling the operation of the arithmetic logic means, the registers, the incrementers, the switching means, and the input/output means in response to the contents of the instruction register.

4,300,196
METHOD OF ADJUSTING CIRCUIT COMPONENTS
Philip V. Lopresti, Hopewell Township, Mercer County, N.J., assignor to Western Electric Co., Inc., New York, N.Y.
Filed Sep. 15, 1975, Ser. No. 613,674
Int. Cl.³ G05B *23/02;* **G01R** *35/00*
U.S. Cl. 364—489 **20 Claims**

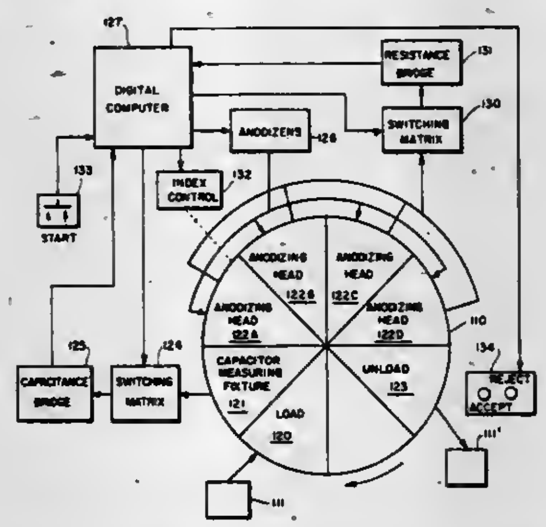

1. A method for controlling the adjustment of a plurality of machine-adjustable components in a circuit, the method comprising:
(a) determining any change from a design value of a circuit monitor parameter, which parameter expresses a characteristic of the circuit;
(b) calculating a target value for a first one of said machine-adjustable components using:
(i) the circuit monitor parameter change determined in step (a); and
(ii) a predetermined feedback factor which relates the change from design value in the circuit monitor parameter to a compensating change from the design value in the adjustable component;
(c) adjusting a first one of the adjustable components towards the target value determined for said component in step (b); and
(d) repeating steps (a) through (c) for each adjustable component whereby the adjustments to all priorly adjusted components are taken into account in subsequent component adjustments.

4,300,197
PROCESS AND APPARATUS FOR THE CENTERING OF BODIES OF ROTATION HAVING UNEVEN MASS DISTRIBUTION ALONG THEIR SHAFT AXIS
Harald Schönfeld, Darmstadt; Heinrich Hack, Reinheim, and Ludwig Arras, Gross Zimmern, all of Fed. Rep. of Germany, assignors to Carl Schenck AG, Fed. Rep. of Germany
Filed Apr. 25, 1979, Ser. No. 33,045
Claims priority, application Fed. Rep. of Germany, May 27, 1978, 2823219
Int. Cl.³ G01M *1/16*
U.S. Cl. 364—508 **14 Claims**

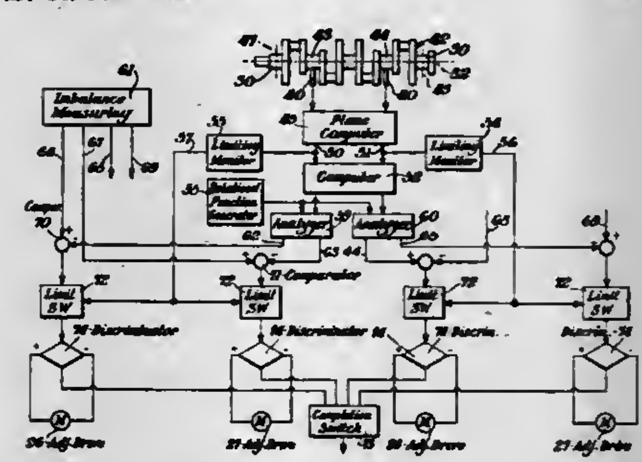

1. A process for centering rotational bodies having uneven mass distribution along a shaft axis, particularly crankshafts, in a dynamic centering machine, whereby a processing axis is obtained by shifting both ends of the rotational body relative to the axis of rotation of the dynamic centering machine, comprising the steps in that for the determination of the processing axis in two planes of the rotational body, its imbalances are compared with an imaginary imbalance corresponding to the parallel displacement of the shaft axis with respect to the rotational axis and to the incline of the shaft axis to the rotational axis, that a predetermined imbalance value per plane is associated with the processing axis, and that a limit value providing a maximum structural displacement of the shaft axis toward the rotational axis is taken into consideration.

4,300,198
ROBOT WITH LIGHT-WEIGHT, INERTIA-FREE PROGRAMMING DEVICE
Giorgio Davini, Viale Suzzani, 283 Milano, Italy
Continuation-in-part of Ser. No. 895,037, Apr. 10, 1978, abandoned, which is a continuation-in-part of Ser. No. 815,440, Jul. 13, 1977, Pat. No. 4,239,432, which is a continuation-in-part of Ser. No. 598,688, Jul. 24, 1975, abandoned. This application May 11, 1979, Ser. No. 38,249
Claims priority, application Italy, Oct. 22, 1974, 28662 A/74
Int. Cl.³ G05B *19/42;* **B25J** *9/00*
U.S. Cl. 364—513 **10 Claims**

1. A teaching device for developing electrical signals for programming a robot comprising, a manually actuated programming device comprising, a mount, an upstanding first arm section movable on said mount to a vertical position and pivotally laterally relative to said vertical position, a second arm section pivotally mounted on said first arm section on an end portion thereof remote from said mount, a third arm section pivotally mounted on said second arm section on an end portion thereof remote from said upstanding arm section, a fluid-actuated compensating device connected to the first arm section to apply thereto a force of a constant value compensating a varying torque due to the effect of gravitational forces when said first arm section is inclined to the vertical, and the last-mentioned device including means for varying an effective lever arm through which said force of a constant value is applied.

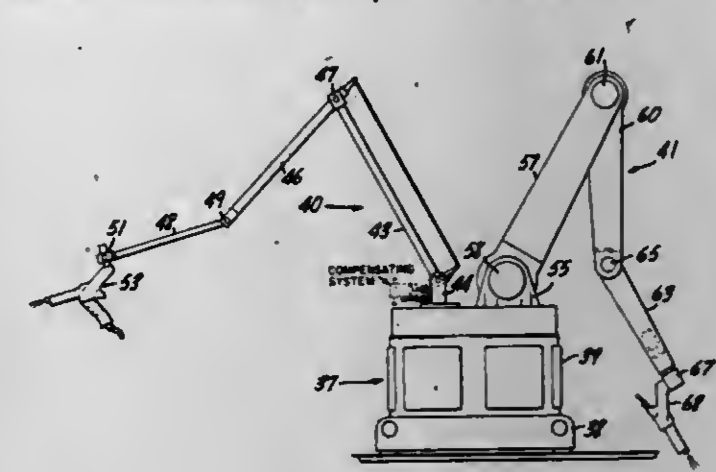

4,300,199
THERMOSTAT
Myron Yoknis, and James B. Waite, both of Ft. Collins, Colo., assignors to Teledyne Industries, Inc., Ft. Collins, Colo.
Filed Aug. 27, 1979, Ser. No. 69,978
Int. Cl.³ F23N *5/20;* **H05B** *1/02;* **G06F** *15/20*
U.S. Cl. 364—557 **21 Claims**

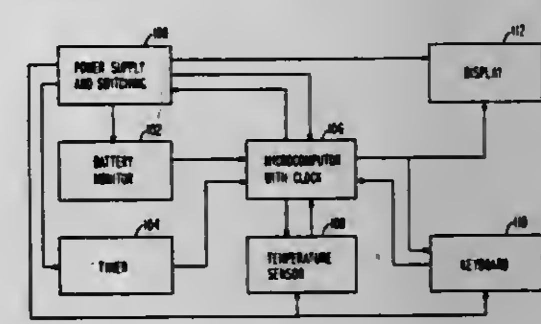

1. A thermostat comprising:
a memory unit;
means for selectively entering into said memory a chosen pattern of unit values of temperature desired at different times on different days of a week;
an output device for governing a temperature-determining system;
a clock;
means controlled by said clock to address said memory unit during said different times of said different days and determine said values;
means for sensing an existing temperature level;
means for comparing the determined value, at said different times on said different days, with said level to develop a control signal;
means responsive to said control signal for operating said output device in a manner to effect reduction of the difference between said determined value and said temperature level;
and time-delay means, incorporated in said responsive means, for maintaining operation of said output device a predetermined minimum period of time following initiation of operation of said output device to actuate said system.

4,300,200

HELICOPTER AIRSPEED INDICATING SYSTEM

Reginald A. Doe, Yeovil, England, assignor to Westland Aircraft Limited, Yeovil, England

Filed Nov. 23, 1979, Ser. No. 96,829

Claims priority, application United Kingdom, Dec. 1, 1978, 46895/78

Int. Cl.[3] **G06F** *15/20*

U.S. Cl. 364—565 **11 Claims**

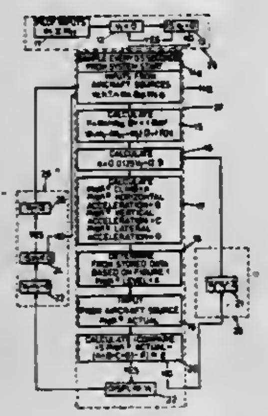

1. An on board apparatus for estimating the low end airspeed of a helicopter during flight comprising:
means for determining the helicopter applied power;
means for determining the weight of the helicopter;
means for storing predetermined confirmed measurements of the airspeed of the helicopter at various applied powers and weights;
means for determining an estimated airspeed using the determined power and weight and the stored measurements, and for outputting a signal; and
indicator means coupled to said determining means and responsive to said signal for displaying the estimated airspeed.

4,300,201

METHOD AND APPARATUS FOR ASCERTAINING THE BULK WEIGHT OF TOBACCO OR THE LIKE

Waldemar Wochnowski, Hamburg-Meiendorf, Fed. Rep. of Germany, assignor to Hauni-Werke Körber & Co. KG, Hamburg, Fed. Rep. of Germany

Filed Sep. 17, 1979, Ser. No. 76,411

Claims priority, application Fed. Rep. of Germany, Sep. 23, 1978, 2841494

Int. Cl.[3] **G01G** *11/00;* **G06F** *15/46*

U.S. Cl. 364—567 **32 Claims**

1. A method of continuously ascertaining the bulk weight of tobacco or other particulate material, comprising the steps of continuously conveying a stream of particulate material along a first and into and along a second portion of a predetermined path; monitoring the mass of material not later than in said second portion of said path; comparing the monitored mass with a predetermined value; changing the volume of material leaving said first portion of said path when the monitored mass deviates from said predetermined value; generating first signals denoting the volume of material leaving said first portion of said path; generating second signals denoting the mass of material leaving said second portion of said path; and utilizing said first and second signals for generation of third signals denoting the bulk weight of the material of said stream.

4,300,202

METHOD AND APPARATUS FOR WEIGHT DETERMINATION OF THE AMOUNT OF A SUBSTANCE POSSESSING FLUIDITY QUALITY

Vladimir M. Chizhikov, Sojuzny prospekt, 26, korpus 1, kv. 75; Leonid A. Matskin, Krasnoarmeiskaya ulitsa, 26, korpus 2, kv. 23; Mikhail N. Fokin, 5 Parkovaya ulitsa, 52, kv. 146; Boris P. Timofeev, Gospitalny val, 3, korpus 4, kv. 35; Mark N. Tokar, Varshavskoe shosse, 55, korpus 4, kv. 325; Ruben D. Balayan, Perovskaya ulitsa, 13, korpus 1, kv. 69; German A. Trubin, B.Semenovskaya ulitsa, 27/2, kv. 59; Alexandr M. Melik-Shakhnazarov, Leninsky prospekt, 67/2, kv. 303, all of Moscow; Dmitry A. Barabashov, Novomytischinsky prospekt, 39, korpus 2, kv. 161, Mytischi Moskovskoi oblasti; Vladimir A. Dmitriev, Leninsky prospekt, 67/2, kv. 281, and Sergei V. Vakhlyaev, Teply stan, 6 mikroraion, korpus 91, kv. 157, both of Moscow, all of U.S.S.R.

Filed Oct. 16, 1979, Ser. No. 85,291

Int. Cl.[3] **G01G** *13/16*

U.S. Cl. 364—567 **15 Claims**

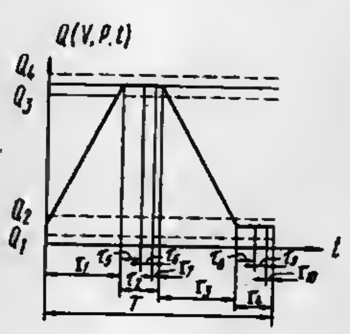

1. A method of weight determination of the amount of a substance possessing fluidity quality, carried out in a continuous flow of the substance passing through a number of reservoirs, comprising the steps as follows;
periodically loading each of said reservoirs with said substance;
terminating said loading within a preset upper range determined by a least one of the characteristics including the volume and weight of the substance and load time, loading of each of said number of reservoirs being terminated not earlier than a time of initiation of loading of one of the remaining reservoirs of said number of reservoirs;
weighing each of said loaded reservoirs for said preset upper range after a time interval corresponding to the setup time for the reservoir with the substance;
periodically unloading each of the reservoirs of said number of reservoirs;
terminating said unloading within a preset lower range determined by at least one of the characteristics including the volume and weight of the substance and unload time, unloading of each of said number of reservoirs being terminated not earlier than a time of initiation of unloading of one of the remaining reservoirs of said number of reservoirs;
weighing each of said reservoirs for said preset lower range after a time interval corresponding to the setup time for the reservoir with the substance; and
determining the total amount of the substance by processing the results obtained during said weighing operations for said preset upper and lower ranges.

4,300,203

METHOD AND MEANS FOR OPERATING LOGARITHMIC CIRCUITS

James R. Brown, Garden Grove, Calif., assignor to Beckman Instruments, Inc., Fullerton, Calif.

Filed Oct. 19, 1979, Ser. No. 86,387

Int. Cl.[3] **G06F** *7/02*

U.S. Cl. 364—577 **18 Claims**

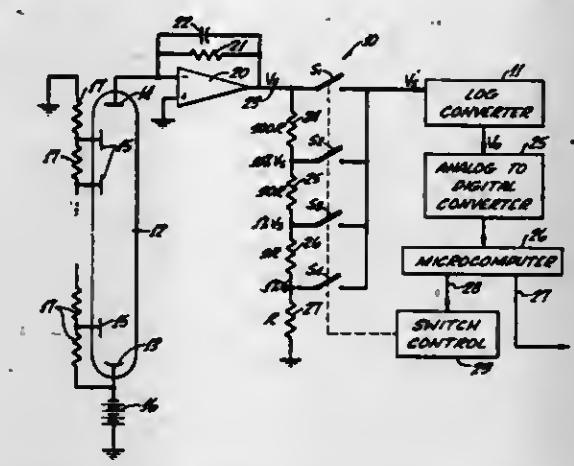

12. Apparatus for operating a log converter circuit comprising:
means for sequentially conducting at least two input signals to the input of said log converter circuit, each of said input signals having a known value, said signals being within the range of operation of said log converter circuit;
means for storing the outputs of said circuit as output signals having known values;
means for conducting to said input of said circuit an input signal having an unknown value; and
means for comparing the unknown output signal of said circuit with said unknown input signal applied thereto with the stored output signals to determine the value of said unknown output signal.

4,300,204

TIME AND DATE INFORMATION CORRECTION IN A COMBINATION TIMEPIECE AND CALCULATOR UTILIZING A DECIMAL POINT INDICATOR DISPLAY

Hidetoshi Maeda, Tenri, and Takehiko Sasaki, Yamatokoriyama, both of Japan, assignors to Sharp Kabushiki Kaisha, Osaka, Japan

Continuation of Ser. No. 880,643, Feb. 24, 1978, abandoned, which is a division of Ser. No. 720,205, Sep. 3, 1976, Pat. No. 4,120,036. This application Jan. 3, 1980, Ser. No. 109,321

Claims priority, application Japan, Sep. 5, 1975, 50-122917; Apr. 2, 1976, 51-37371

Int. Cl.[3] **G04G** *5/04, 9/02;* **G06F** *3/02*

U.S. Cl. 364—705 **6 Claims**

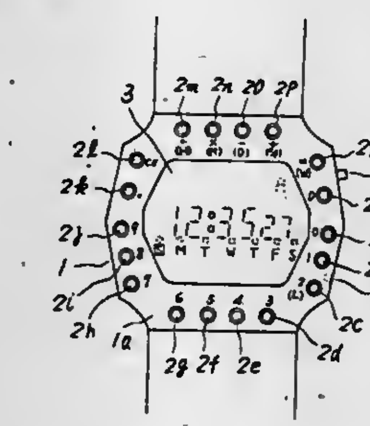

1. A combination timepiece and calculator, comprising:
reference frequency signal generating means for developing a reference frequency signal for said timepiece;
input means for introducing numeral information and operation commands into said combination timepiece and calculator, said input means including numeral keys and function keys, said numeral keys introducing said numeral information, said function keys introducing said operation commands into said timepiece and calculator;
computation circuit means responsive to the introduction of said numeral information and said operation commands into said combination timepiece and calculator via said input means for performing calculation operations on said numeral information in accordance with said operation commands, for developing a processed result in response to said calculation operations and for developing output signals indicative of said processed result, said processed result being represented by numerals and a decimal point;
time information keeping circuit means responsive to said reference frequency signal from said reference frequency signal generating means for performing timepiece operations in accordance with said reference frequency signal, for developing a resultant time information in response to said timepiece operations and developing output signals indicative of said resultant time information, said resultant time information being represented by numerals and including time information indicative of the days of the week;
first selection means responsive to said output singals from said computation circuit means and from said time information keeping circuit means for selecting either the output signal from said computation circuit means indicative of said processed result or for selecting the output signal from said time information keeping circuit means indicative of said resultant time information and for passing either the output signal from said computation circuit means or the output signal from said time information keeping circuit means in accordance with the selection made via said first selection means; and
display means responsive to the output signal passed from said selection means for displaying said processed result from said computation circuit means or said resultant time information from said time information keeping circuit means, said display means including,
digital numeral information display means for digitally displaying said processed result and said resultant time information in the form of said numerals,
a plurality of day-of-the-week indicating indicia indicative of each of said days of the week, and
a plurality of individual display means operatively associated with each of said day-of-the-week indicating indicia and with said digital numeral information display means for indicating one of said days of the week when the output signal from said first selection means indicates said combination timepiece and calculator functions as a timepiece, said plurality of individual display means indicating the decimal point of said processed result when the output signal from said first selection means indicates said combinations timepiece and calculator functions as a calculator.

4,300,205

AUTOMATIVE ENGINE SIMULATING APPARATUS

Chusak Tansuwan, St. Louis, Mo., assignor to ACF Industries, Inc., New York, N.Y.

Filed Apr. 7, 1980, Ser. No. 137,830

Int. Cl.[3] **G06G** *7/70*

U.S. Cl. 364—578 **24 Claims**

1. Apparatus for simulating the operating characteristics of an automobile engine comprising:
starting means for electrically simulating the ignition system of the engine;
means for generating an electrical signal representative of engine revolutions per minute under various engine operating conditions;
control means for controlling the signal generating means, the control means simulating a transfer function derived for the engine;

speed means for simulating engine acceleration and deceleration;
sensor simulating means for simulating the operation of an oxygen sensor normally positioned in an exhaust system of the engine and for generating an electrical signal representative of an output signal supplied by the oxygen sensor;

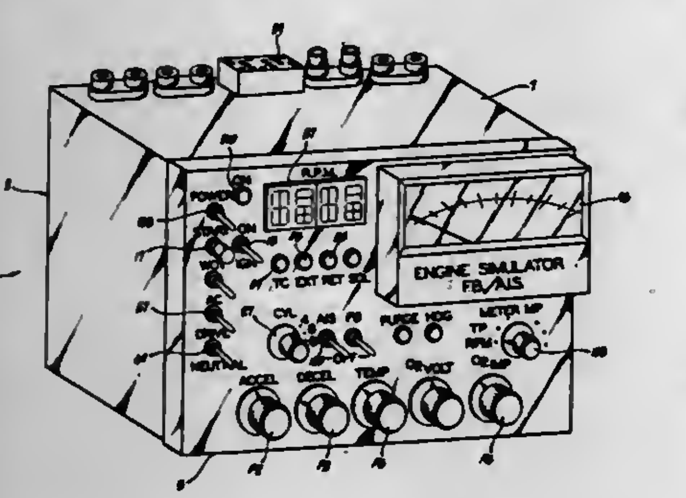

first servo simulating means for simulating the operation of a first electromechanical device controlled by an automobile engine control system; and
second servo simulating means for simulating the operation of a second electromechanicl device controlled by the automobile engine control system whereby the apparatus is useful for testing and calibrating a feedback and automatic idle speed control system for the automobile.

4,300,206
FLEXIBLE TEXT AND IMAGE GENERATOR FOR A RASTER PRINTER
James G. Belleson, Hillsborough; John R. Disbrow, and Everett T. Eiselen, both of Los Gatos, all of Calif., assignors to International Business Machines Corporation, Armonk, N.Y.
Continuation of Ser. No. 811,911, Jun. 30, 1977, abandoned. This application Feb. 7, 1979, Ser. No. 10,276
Int. Cl.³ G06F *3/12*
U.S. Cl. 364—900 **22 Claims**

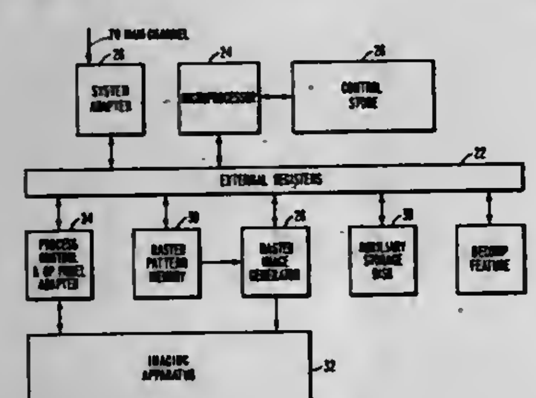

1. A system for printing text and image data in raster form on a print medium in response to input data, said system comprising:
means for providing input data comprising character data and control data including position data and font data in the form of successively occurring groups of data of like size;
storage means for storing in response to said font data graphic coded data comprising a plurality of bits in discrete groups for each of the characters represented by said character data;
first control means coupled to said means for providing input data to receive said input character data and for processing said input character data in response to said control data, said first control means operable in response to said control data to translate each group of character data into a group of translated data comprising position data specifying the position of the character on the page to be printed, size data defining the size of the graphic character defined by the character data, and address data to define the position in said storage means of the graphic coded data which defines the character represented by the group of character data; said first control means operable to generate a first control signal indicative that all character data to be printed on a page has been translated;
buffer means coupled to receive graphic coded data from said storage means and for assembling the graphic coded data for a part of the page to be printed;
second control means coupled to said first control means, said buffer means and said storage means, said second control means being responsive to said first control signal and to said position data, said size data and said address data for sequentially moving from said storage means to said buffer means graphic coded data comprising all discrete groups for the specified translated data in the sequence the data is to be printed;
means for logically combining said graphic coded data from said storage means with the assemblage of graphic coded data previously stored in said buffer means as said graphic coded data is moved from said storage means to said buffer means; and
third control means coupled to said buffer means for accessing said logically combined assemblage of graphic coded data stored in one area of the buffer means for sequentially printing on a print medium each of the characters represented by the character data.

4,300,207
MULTIPLE MATRIX SWITCHING SYSTEM
Donald J. Eivers, Massapequa, and Eddie J. Kovacs, Kings Park, both of N.Y., assignors to Grumman Aerospace Corporation, Bethpage, N.Y.
Filed Sep. 25, 1979, Ser. No. 78,900
Int. Cl.³ G01R *31/28*
U.S. Cl. 364—900 **11 Claims**

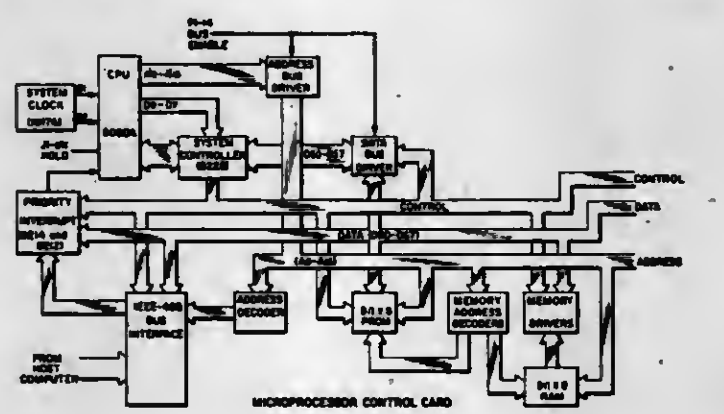

FI

1. A switching system for selectively connecting a unit under test to an external instrument comprising:
(a) test interface means for adapting said unit under test to said switching system;
(b) instrument interface means for adapting said instrument to said switching system;
(c) signal bus means;
(d) multiple matrix switching means for controllably providing a signal path between said test interface means and said instrument interface means via said signal bus means;
(e) control means for selectively activating said multiple matrix switching means to effect connection of said unit under test to said instrument; and
(f) means for effecting communication between an external controller and said control means.

4,300,208
CONTROLLING WHICH OF TWO ADDRESSES IS USED BY A MICROCODE MEMORY
James L. Jasmin, White Bear Lake, Minn., and Lawrence M. Kruger, Clifton Park, N.Y., assignors to Control Data Corporation, Minneapolis, Minn.
Filed Nov. 30, 1979, Ser. No. 98,993
Int. Cl.³ G06F *9/22*
U.S. Cl. 364—900 **9 Claims**

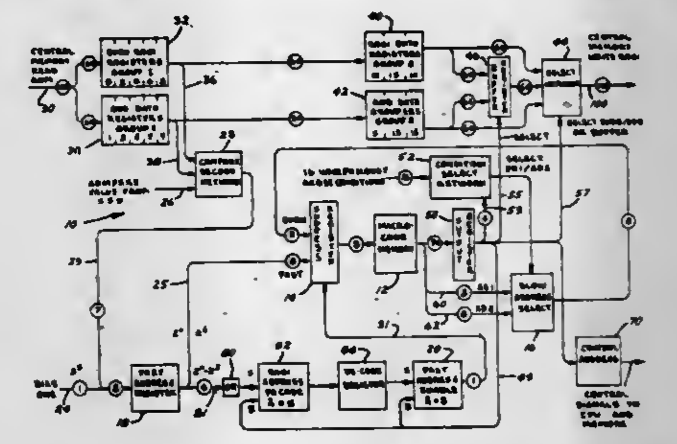

1. A microcode memory system for operating in at least a first mode or in a second mode of operation comprising:
a microcode memory,
a memory address register having its output connected to the microcode memory and having at least a first input and a second input, said register being responsive to an address select control signal to select which one of at least two possible inputs is connected with said microcode memory,
a memory output register connected to said microcode memory,
means for providing addresses for said first mode to said first input of said address register,
first data register means connected to receive input data operands from a central processor, for providing at least a portion of said input data operands as an output,
compare means connected to said first data register means for comparing said portions of input data operands with a predetermined value and providing an output address signal in response thereto,
second mode address register means for receiving said output of said compare means and having as an output a signal which is connected with said second input of said memory address register, and
second mode address control means for providing an address select control signal to said memory address register and receiving as input signals at least a portion of the contents of said memory output register and at least a portion of the contents of said second mode address register for controlling which of two preselected inputs to said address register comprises the address to said microcode control memory.

4,300,209
METHOD FOR ADJUSTING SIGNAL LEVEL OUTPUT FROM A MAGNETIC BUBBLE DETECTOR
Hudson A. Washburn, Santa Clara, Calif., assignor to Intel Magnetics, Inc., Santa Clara, Calif.
Filed Jun. 27, 1980, Ser. No. 163,574
Int. Cl.³ G11C *19/08*
U.S. Cl. 365—8 **16 Claims**

1. In a magnetic apparatus which includes a layer of material in which single wall domains are moved in response to a changing magnetic field, and a layer of magnetic elements including a detector element for detecting an expanded domain, and other elements adjacent to said detector element for propagating domains into and from said detector element, a method for adjusting the signal level to a predetermined level from said detector element comprising the step of:
removing a selected portion of at least one of said other elements;

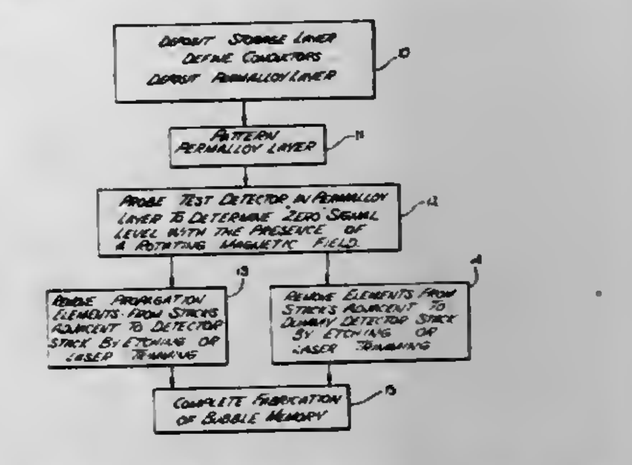

whereby the effect of said changing magnetic field on said detector element is altered by said removing of said portion of said other element, thereby providing said adjustment of said signal level.

4,300,210
CALIBRATED SENSING SYSTEM
Satya N. Chakravarti, Troy, N.Y.; Lawrence G. Heller, South Burlington, and Wilbur D. Pricer, Burlington, both of Vt., assignors to International Business Machines Corp., Armonk, N.Y.
Filed Dec. 27, 1979, Ser. No. 108,242
Int. Cl.³ G11C *27/00, 11/40, 11/24*
U.S. Cl. 365—45 **21 Claims**

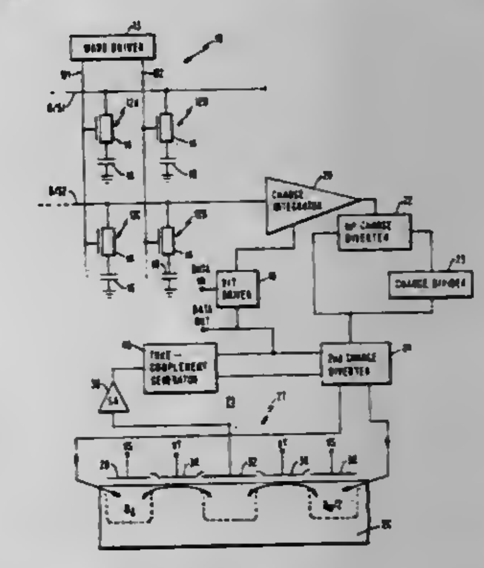

1. A system for sensing an unknown charge representative of first and second digits stored in a charge storage medium having a given high charge state comprising
a charge detecting circuit having first and second storage mediums and means for comparing relative amounts of charge in said first and second storage mediums,
means for transferring said unknown charge into said first storage medium,
means for introducing charge into said charge storage medium to said high charge state,
charge dividing means for forming fractional packets of charge of said high state charge,
means for transferring said high state charge to said charge dividing means,
means for transferring a first given fractional packet of charge from said charge dividing means to said second storage medium in said charge detecting circuit, and
means for transferring a second given fractional packet of charge from said charge dividing means to one of said first and second storage mediums of said charge detecting circuit depending upon the relative value of said unknown charge to said first given fractional packet of charge.

4,300,211
DATA-STORAGE DEVICES AND BISTABLE CIRCUITS THEREFOR
Robert J. Hodson, London, England, assignor to Molins Limited, London, England
Filed Jan. 17, 1979, Ser. No. 4,114
Claims priority, application United Kingdom, Feb. 2, 1978, 4158/78
Int. Cl.³ G11C *13/08*
U.S. Cl. 365—110 **18 Claims**

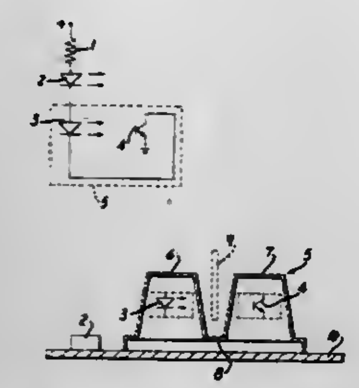

1. A bistable circuit comprising an electrically-energized infra-red-emitting diode and an infra-red responsive phototransistor responsive to infra-red radiation connected in series with one another so that infra-red radiation is emitted by said diode when said phototransistor is conductive and so disposed relative to one another that such emitted infra-red radiation irradiates said phototransistor to maintain it in conductive condition, a transistor amplifier coupled to said phototransistor to amplify the output of the latter to cause said diode to emit sufficient infra-red radiation to maintain said phototransistor conductive, a cover in the form of a hollow molding which is opaque to visible light but transmits infra-red rays, said molding having two raised portions in which said diode and said phototransistor are respectively located and a depressed portion between said raised portions so that radiation traveling from the diode to the phototransistor passes through the walls of said raised portions and a visible light-emitting element connected in series with said infra-red-emitting diode and phototransistor, said visible light-emitting element being positioned externally of said cover to indicate visually when said circuit is in the ON state.

4,300,212
NONVOLATILE STATIC RANDOM ACCESS MEMORY DEVICES
Richard T. Simko, Los Altos, Calif., assignor to Xicor, Inc., Los Altos, Calif.
Continuation-in-part of Ser. No. 6,030, Jan. 24, 1979. This application Jan. 24, 1979, Ser. No. 6,029
Int. Cl.³ G11C *11/40*
U.S. Cl. 365—185 **13 Claims**

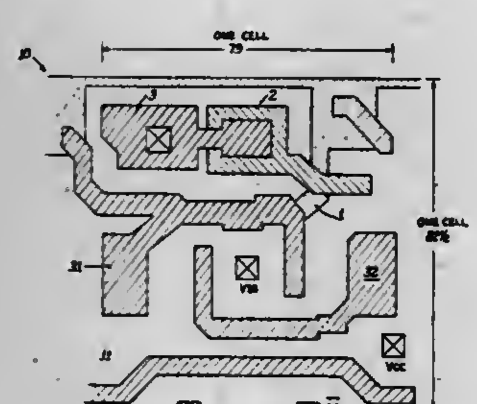

1. A nonvolatile memory device comprising a volatile semiconductor memory cell for storing binary data, means for reading from and writing to said volatile memory cell, a nonvolatile memory means, comprising an electrically insulated floating gate conductor, for storing binary data as one of two different electric charge levels on said floating gate conductor, means for capacitively coupling said volatile memory cell to said nonvolatile memory means and for copying the memory state of said bistable memory cell to the floating gate conductor at a predetermined one of said electric charge levels, and means for capacitively coupling said floating gate conductor of said nonvolatile memory means to the said volatile memory cell for copying the memory state of said floating gate to said volatile memory cell upon application of electrical power to said volatile memory cell.

4,300,213
MEMORY CIRCUIT WITH INCREASED OPERATING SPEED
Nobuyoshi Tanimura, Tokyo; Hiroshi Fukuta, Kodaira; Kotaro Nishimura, Kodaira, and Tokumasa Yasui, Kodaira, all of Japan, assignors to Hitachi, Ltd. and Hitachi Ome Electronic Co., Ltd., both of Tokyo, Japan
Filed Oct. 31, 1979, Ser. No. 89,745
Claims priority, application Japan, Nov. 24, 1978, 53-144133
Int. Cl.³ G11C *7/00*
U.S. Cl. 365—190 **8 Claims**

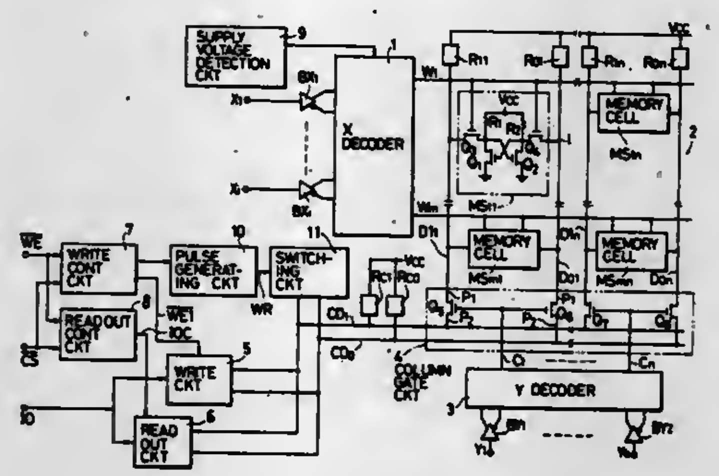

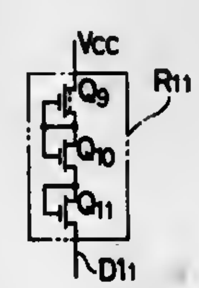

1. A memory circuit comprising:
a memory cell circuit having a selecting terminal and input and output terminals;
a digit line with which the input and output terminals of said memory cell circuit are connected;
load means connected with said digit line;
a decoder circuit; and
switching means controlled in response to the output signals of said decoder circuit for coupling said digit line to a data line,
said load means including a plurality of enhancement mode insulated gate field effect transistors connected in series in a diode form.

4,300,214
CIRCUITRY FOR REDUCING PARASITIC COUPLING IN CORE MEMORY
John F. Bruder, Phoenix, Ariz., assignor to Quadri Corporation, Tempe, Ariz.
Filed Aug. 20, 1979, Ser. No. 67,811
Int. Cl.³ G11C *7/02, 11/06*
U.S. Cl. 365—196 **6 Claims**

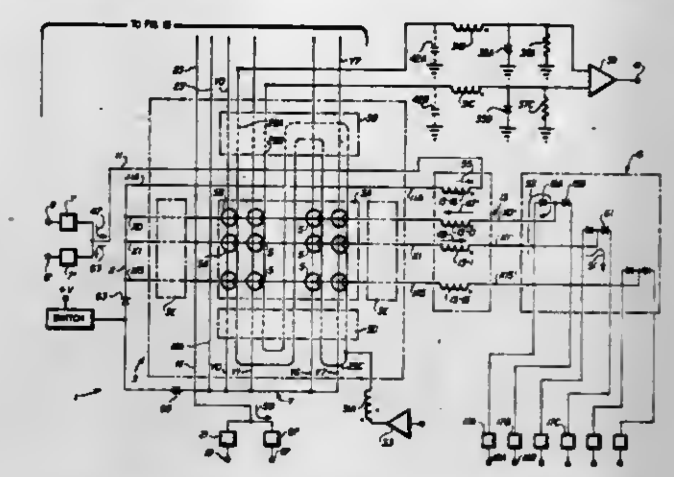

1. A core memory system comprising in combination:
(a) a plurality of memory cores, said cores being arranged in a plurality of core groups;
(b) a first group of select conductors each having a first end and a second end and each being threaded through all of the cores of a respective one of said core groups, the first ends of all select conductors of said first group being connected together;
(c) a first driver-receiver circuit and a first group of driver-receiver circuits;
(d) a balun transformer having a first winding and a first group of windings equal in number to the number of select conductors of said first group, said first winding and each of said windings of said first group having substantially the same number of turns, said first winding and each winding of said first group having a first polarity terminal and a second polarity terminal; and
(e) a sense-inhibit conductor threaded through all of said cores;
the first polarity terminal of said first winding being coupled to said first driver-receiver circuit, the first polarity terminals of each of said windings of said first group being coupled to a respective driver-receiver circuit of said first group,
the second polarity terminal of said first winding being connected to all of the first ends of said select conductors of said first group, the second polarity terminals of said windings of said first group being coupled to the respective second ends of said select conductors of said first group,
the amount of a select current forced into one end of any of said select conductors being essentially equal to the amount of current forced to flow out of the other end of that select conductor, allowing no more than a negligible amount of parasitic current to charge parasitic capacitances coupling that select conductor to said sense-inhibit conductor and to other select conductors.

4,300,215
WIDE ANGLE ACOUSTIC CAMERA
Charles H. Jones, Pasadena, Md., assignor to Westinghouse Electric Corp., Pittsburgh, Pa.
Filed Jun. 6, 1980, Ser. No. 156,959
Int. Cl.³ G01S *15/89*
U.S. Cl. 367—11 **20 Claims**

1. An underwater acoustic camera for imaging a target area from a minimum range to a maximum range, comprising:
(A) a housing structure;
(B) said housing structure including a generally conical acoustic lens portion having a central axis oriented vertically during use over said target area;
(C) a plurality of transducer elements arranged on the circumference of a circle which lies inside of said housing structure in a plane perpendicular to said axis with the center of said circle lying on said axis;
(D) means for sonifying said target area;

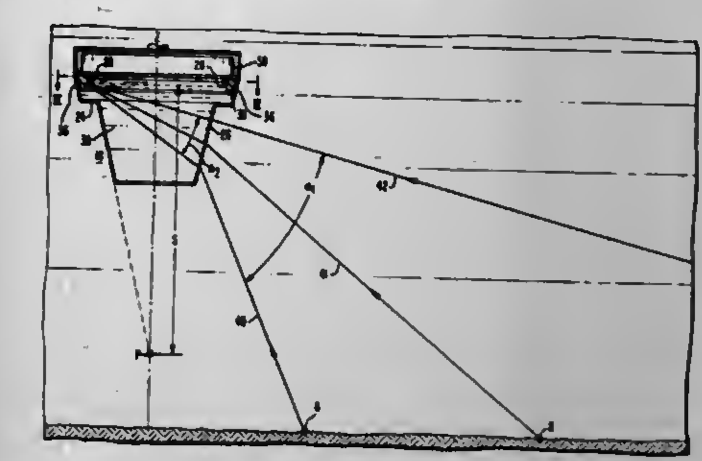

(E) said lens portion being shaped so as to focus acoustic returns from relatively narrow radial areas on said target area onto respective ones of said transducer elements to cause corresponding output signals therefrom; and
(F) means for processing and displaying said output signals of said transducer elements.

4,300,216
MULTI-CHANNEL FISHSCOPE
George G. Barton, Jr., Star Rte., Box 180, Harkers Island, N.C. 28531
Filed Dec. 10, 1979, Ser. No. 101,836
Int. Cl.³ G01S *15/96*
U.S. Cl. 367—113 **7 Claims**

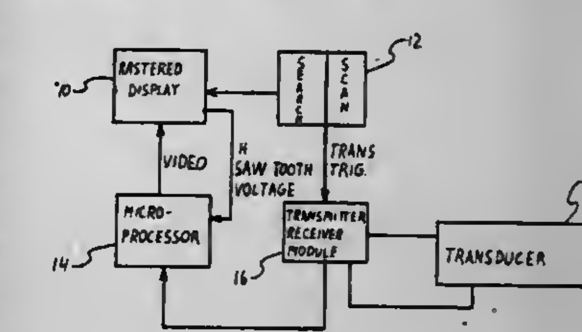

1. A sonic fishscope for detecting the presence and general location of fish or other target objects within a selected area, comprising: transducer means; a transmitter-receiver module operatively associated with said transducer means such that cooperatively said transmitter-receiver module and said transducer means generate and emit a sound wave train that is directed towards said selected area by said transducer means, and wherein the contact of said sound wave train with certain objects gives rise to a reflected sound wave train that is directed back to said transducer means wherein the reflected sound wave train is converted to an electrical reproduction signal by said transducer means and transmitted to said transmitter-receiver module; a microprocessor operatively associated with said transmitter-receiver module for receiving the electrical reproduction signals therefrom, said microprocessor including means for amplifying said electrical reproduction signals and for generating positive and negative voltage profiles therefrom, said microprocessor further including voltage comparator means for comparing said positive and negative voltage profiles with a reference signal and for generating a resulting output video signal which is compatible with a rastered display format; a display module operatively associated with said microprocessor for receiving said output video sig-

nals therefrom, said display module including a rastered display and wherein said output video signals are presented on said rastered display where the respective video signals appear as echo traces and generally indicate the presence and reflectivity of certain objects within the selected area; and means operatively associated with said transmitter-receiver module and said display module for effectively determining the depth of certain objects giving rise to said reflected sound wave trains, and for further indicating the appropriate depth of such detected objects on said rastered display of said display module.

4,300,217
ACOUSTIC TRANSDUCER HOUSING
Dale O. Ballinger, Denver, Colo., assignor to Honeywell Inc., Minneapolis, Minn.
Filed Jul. 30, 1980, Ser. No. 173,859
Int. Cl.³ H04R *1/02*
U.S. Cl. 367—140 4 Claims

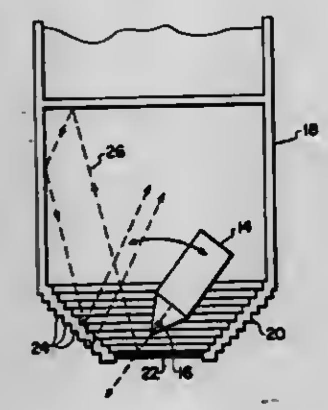

1. A housing structure for an electroacoustic transducer comprising a main body portion having a first cross-sectional dimension:

a generally truncated conical end portion having a larger end terminating at one end of said main body portion and a smaller end comprising an operating end of said structure, and

an acoustically transparent window secured in said operating end,

said conical end portion of said housing structure being formed of a plurality of stepped annuli, whereby to provide sharp angles of incidence to internally reflected acoustic pulses to minimize spurious signals in said transducer.

4,300,218
FREE FLOODING HYDROPHONE MOUNTING
Vitold R. Kruka; Albert J. Bernal; Lawrence D. Park, Jr., and Edward R. Cadena, all of Houston, Tex., assignors to Shell Oil Company, Houston, Tex.
Filed May 1, 1980, Ser. No. 145,528
Int. Cl.³ G01V *1/38, 1/16*
U.S. Cl. 367—165 19 Claims

1. Apparatus for mounting a seismic transducer for use in a seismic streamer cable which is comprised of flotation material and a cable core having a longitudinal axis, said core including a stress member, said cable having electrical conductors disposed therein and a plurality of seismic transducers connected to said electrical conductors, said transducer mounting comprising:

a rigid structure having a cavity therein opening to the exterior thereof for containing said seismic transducer, said rigid structure located within said seismic cable adjacent said cable core;

means located within said cavity for supporting said seismic transducer and allowing substantially free circulation for fluids external the streamer cable therebelow; and,

a cover for said rigid structure having one or more openings therein for permitting entry of external fluids into said

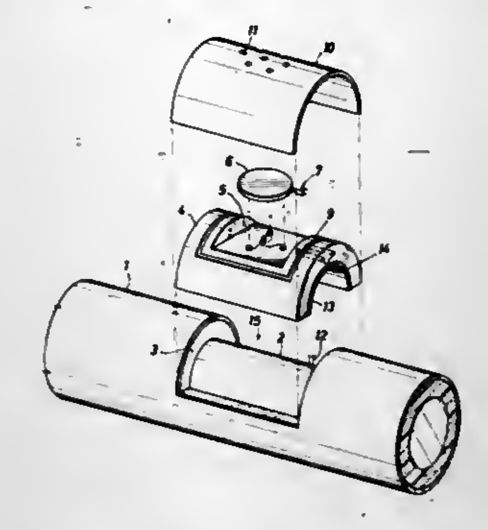

cavity and exit therefrom, said cover conforming to the exterior profile of said rigid structure.

4,300,219
BOWED ELASTOMERIC WINDOW
Arthur B. Joyal, Bristol, R.I., assignor to Raytheon Company, Lexington, Mass.
Filed Apr. 26, 1979, Ser. No. 33,649
Int. Cl.³ H04R *17/00*
U.S. Cl. 367—174 10 Claims

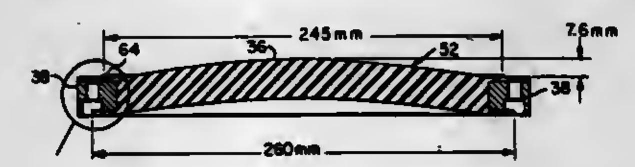

1. A window for fluid filled sonar transducer housing comprising:

a mounting ring having an inner circumferential surface; and

an elastomeric plate secured to the inner cirumferential surface of said ring and clamped between said ring and said housing, said plate being molded with a convex inner and outer surface which faces the interior of said housing, said plate being compressed against said inner circumferential surface in response to pressure of said fluid against the inner convex surface which causes said plate to be deformed to reduce its convexity.

9. A sonar transducer housing comprising:

an enclosure having a port at one end thereof;

a sound transmissive window secured at said one end for enclosing said port, said window including a preformed semi-rigid disk encircled at its periphery by a ring, said disk having a convex surface form which is deformable along the axis of said ring in response to fluid pressure exerted against the convex surface of said disk, the convex surface of said disk facing the interior of said housing; and

fluid filling means within a wall of said enclosure for admitting fluid into said enclosure and retaining said fluid under pressure, said pressure being great enough to force said disk against said ring with sufficient force to convert the convex surface of said disk to a substantially flat surface.

4,300,220
THREE COMPONENT DETECTOR AND HOUSING FOR SAME
Donald D. Goff, and John T. O'Brien, both of Bartlesville, Okla., assignors to Phillips Petroleum Co., Bartlesville, Okla.
Filed May 16, 1980, Ser. No. 150,491
Int. Cl.³ G01V *1/16*
U.S. Cl. 367—188 42 Claims

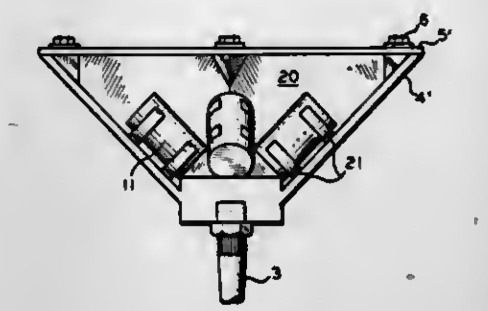

1. A geophone holder comprising a frame having a geophone holding portion and a support portion, the geophone holding portion adapted to hold three geophones so that the principal axis of sensitivity of each geophone forms an angle of about A with a first plane crossing through a portion of said frame, the geophone holding portion further adapted to hold three geophones so that the projection of the principal axis of sensitivity of any one geophone on said first plane intersects with the projections of the principal axes of sensitivity of the other two geophones, the support portion of said frame extending in a direction generally normal to said first plane.

4,300,221
ELECTRONIC TIMEPIECE
Hajime Oda; Nakanobu Moritani, and Toshihide Samejima, all of Tokyo, Japan, assignors to Kabushiki Kaisha Seikosha, Tokyo, Japan
Filed Jul. 6, 1978, Ser. No. 922,434
Int. Cl.³ G04B *19/22*
U.S. Cl. 368—22 6 Claims

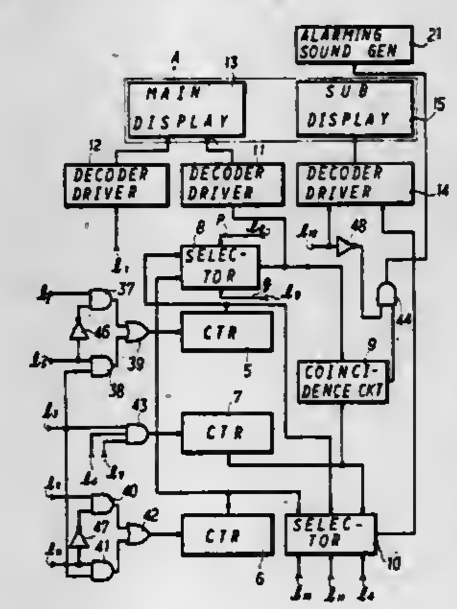

1. An alarm electronic timepiece, comprising:

time counting means for developing a count representative of a time of day;

first means receptive of electrical pulses for storing an electrical signal representative of an alarm time of the day;

second means receptive of electrical pulses for storing an electrical signal representative of a particular set time of the day and for generating a count representative of an elapse of time after the particular time of the day;

a pulse generator circuit including a manually operable switch for generating electrical pulses in response to operation of said manually operable switch and for applying the electrical pulses to said first means and said second means to set the alarm time and the particular set time by operation of said manually operable switch;

time mode selecting circuit means for producing an output signal to select among the time of the day, the alarm time and the time represented by the content of said second means;

display means responsive to electrical signals for displaying time, said display means including a main display section for displaying time and a sub-display section for displaying time;

third means responsive to the output signal of said time mode selecting circuit means for selectively applying the content of said time counting means, said first means and said second means to said display means for arbitrarily displaying the time of the day, the alarm time or the time represented by the content of said second means on either said main display section or said sub-display section of said display means; and

alarm means for generating an alarm signal when the time of day reaches the alarm time.

4,300,222
ELECTRONIC TIMEPIECE
Tatsuo Nitta, Tokorozawa, Japan, assignor to Citizen Watch Co., Ltd., Tokyo, Japan
Filed Dec. 1, 1977, Ser. No. 856,752
Claims priority, application Japan, Dec. 3, 1976, 51/145332
Int. Cl.³ G04B *19/24*
U.S. Cl. 368—37 5 Claims

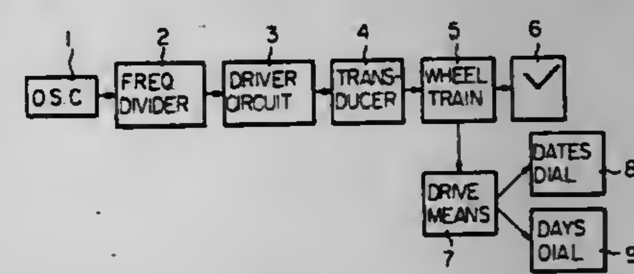

1. An electronic timepiece having time indicating hands and a calendar display, comprising:

a frequency standard providing a relatively high frequency signal;

a timekeeping mechanism composed of a frequency divider circuit for providing time information signals, first driver circuit means responsive to said time information signals for providing first drive signals indicative of time information, first motor means driven in response to said first drive signals, and a wheel train connected to said first drive motor means to actuate said time indicating hands to display said time information including at least hours and minutes information;

a source of a clock signal;

means for generating a daily reference signal at least once per day, which comprises switch means responsive to the movement of the wheel train for providing a switching signal, and a 00:00 AM signal producing circuit including circuit means responsive to said switching signal for producing an output signal and a differentiation circuit responsive to said output signal from said circuit means and said clock signal for generating said daily reference signal which is a 00:00 AM signal indicative of midnight;

calendar memory circuit means responsive to said daily reference signal for memorizing calendar information and providing output signals indicative of said calendar information, said calendar information including respective actual month end information of every month, said calendar memory circuit means comprising a dates counter responsive to said daily reference signal for counting the days in each month and for producing a month end signal indicative of the end of each month, when a predeter-

mined number of days has been counted therein, a month counter responsive to said month end signal for counting the months in each year and for producing a year end signal indicative of the end of each year, when twelve months have been counted, a year counter responsive to said year end signal for counting years, a month end discrimination circuit responsive to the contents of said dates counter for detecting a plurality of predetermined counts of numbers of days and for producing output signals indicative thereof, a months discrimination circuit responsive to the contents of said months counter for detecting a plurality of predetermined counts of numbers of months, and for producing output signals indicative thereof, a leap year discrimination circuit responsive to the contents of said year counter for detecting leap year and for producing output signals indicative thereof, month end compensation signal generator means responsive to the output signals from said month end discrimination circuit, months discrimination circuit and leap year discrimination circuit for producing said calendar information output signals to be applied to said drive signal determination means, and date counter compensation circuit means responsive to said calendar information output signals from said month end compensation signal generator means for producing a dates counter compensation signal, said dates counter compensation signal being applied to said dates counter for automatically correcting the contents thereof at least the end of each month;

drive signal determination circuit means responsive to said daily reference signal and said output signals from said calendar memory circuit means for producing a date discrimination signal, said date discrimination signal including month end correction information;

second driver circuit means responsive to said date discrimination signal to provide second drive signals indicative of calendar information;

second drive motor means comprising a stepping motor coupled to receive said second drive signals; and a dates dial coupled to said stepping motor for displaying the respective actual month end of every month.

4,300,223
SYSTEM FOR MAKING-UP STEPS LOST BY THE MOTOR OF A TIME-PIECE

Bernard Maire, Marin, Switzerland, assignor to Ebauches Electroniques SA, Marin, Switzerland

Filed Dec. 13, 1978, Ser. No. 968,918

Claims priority, application Switzerland, Dec. 20, 1977, 15655/77

Int. Cl.[3] G04C *19/00, 3/00, 5/00;* **G05B** *19/40*

U.S. Cl. 368—85 **8 Claims**

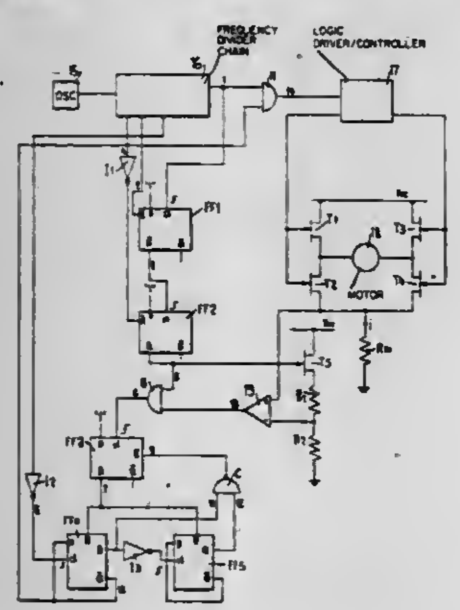

1. A system for making-up steps lost by a stepping motor of a timepiece, comprising:

means for providing a time base;

frequency divider means coupled to said time base means;

means connected to said frequency divider means for providing driving pulses to the stepping motor;

means coupled to said driving pulses means and to said frequency divider means for measuring the value of the current in the motor at a predetermined time after the leading edge of each of said driving pulses;

comparator means coupled to said current measuring means for comparing said measured value of said current in the motor with a predetermined value of reference, said comparator means producing a pulse signalling the non-rotation of the motor when said measured value of said current exceeds said value of reference; and

correcting means coupled to said comparator means and to said driving pulses means for delivering in response to said signalling pulse at least one additional correcting pulse to said motor through said driving pulses means.

4,300,224
ELECTRONIC TIMEPIECE

Yasunori Nakazaki, and Tatsushi Asakawa, both of Suwa, Japan, assignors to Kabushiki Kaisha Suwa Seikosha, Tokyo, Japan

Filed Oct. 18, 1978, Ser. No. 952,371

Claims priority, application Japan, Oct. 18, 1977, 52-124846

Int. Cl.[3] G04B *17/12, 17/16, 17/00*

U.S. Cl. 368—201 **33 Claims**

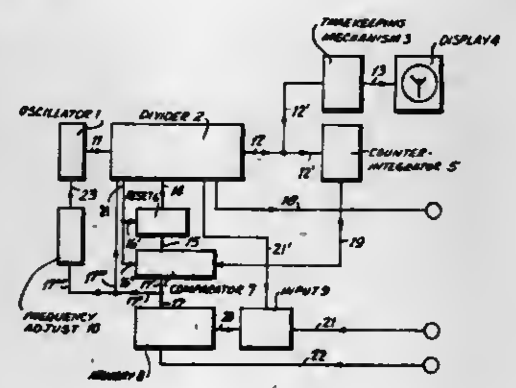

1. A timing apparatus for producing timekeeping signals comprising:

a fundamental frequency oscillator producing a high frequency time standard signal;

a plurality of sequential divider stages coupled to said oscillator for dividing the frequency of said time standard signal, at least one of said divider stages being capable of being reset and at least one of said divider stages being capable of being set, the divided frequency output of said divider stages being suited to produce timekeeping signals; and

memory means for holding stored data; and

first circuit means for selectively applying control signals to as least a portion of said plurality of divider stages, said portion including a divider stage subject to being selectively set in response to said control signals and a divider stage subject to being selectively reset in response to said control signals, said control signals being applied in accordance with said data stored in said memory, whereby the frequency of said timekeeping signals is selectively increased or decreased; and

second circuit means for time delaying said control signals by differing amounts to said portion of said divider stage, wherein upon receiving said control signal from said first circuit means the said portion of the divider stages are reset or set in accordance with said time delay.

4,300,225
DISCO BEAT METER

George R. Lambl, 3026 Old Banksville Rd., Pittsburgh, Pa. 15216

Filed Aug. 9, 1979, Ser. No. 65,273

Int. Cl.[3] G11B *3/00, 27/00*

U.S. Cl. 369—2 **10 Claims**

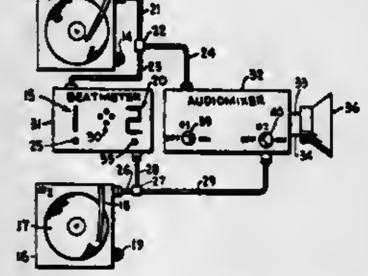

1. A continuous synchronized musical beat system to provide a continuous musical beat audio output for use with plural sources of recorded music, each of said recorded music sources containing basic bass beat rhythm patterns unique to each of said recorded music sources, at least one of said music sources having means to vary the basic bass rhythm rate of said one of said sources of recorded music, said system including in combination,

(a) a first and second bass beat rhythm detector means respectively electrically coupled to a first and a second music source of recorded music, a first and a second input signal appearing respectively on the electrical coupling between said music source and each of said detector means, each of said detector means receiving said first and said second input signals, said first and said second detector means respectively provide a first and a second output signal which contain exclusively said bass beat rhythm of said respective sources,

(b) a signal emitting coincident bass beat signal detector means electrically coupled to said first and said second bass beat rhythm detector means to receive said first and said second output signals,

said coincident beat signal detector means emitting a signal whenever one of said means to vary said basic bass rhythm rate has been varied to cause said bass beat rhythm patterns to be coincident.

4,300,226
COMPENSATION APPARATUS FOR A SERVO SYSTEM WITH PERIODIC COMMAND SIGNALS

William E. Barnette, Levittown, Pa., and Edward C. Fox, Cranbury, N.J., assignors to RCA Corporation, New York, N.Y.

Filed Mar. 14, 1977, Ser. No. 777,477

Claims priority, application United Kingdom, Mar. 19, 1976, 11117/76

Int. Cl.[3] H04N *5/76;* **G11B** *21/02, 7/12*

U.S. Cl. 369—45 **10 Claims**

1. An apparatus for use in an information record playback and recording system for maintaining constant the distance of an objective lens relative to a conductive surface of the record which rotates at a given periodic rate, said apparatus comprising:

a. a probe having an electrode, said probe being connected to an end of said objective lens, said electrode and said conductive surface forming a capacitance element,

b. capacitance sensing means coupled to said electrode for sensing variations from a predetermined value in the capacitance formed between said electrode and said disc and for generating an error signal that varies in accordance with said sensed variations in capacitance, said error signal having a frequency spectrum containing frequency components at harmonics of said given periodic rate,

c. filter means coupled to the output of said capacitance sensing means for providing peak responses at frequencies substantially corresponding to zero frequency, to said given periodic rate and to one of the harmonics of said given periodic rate, and

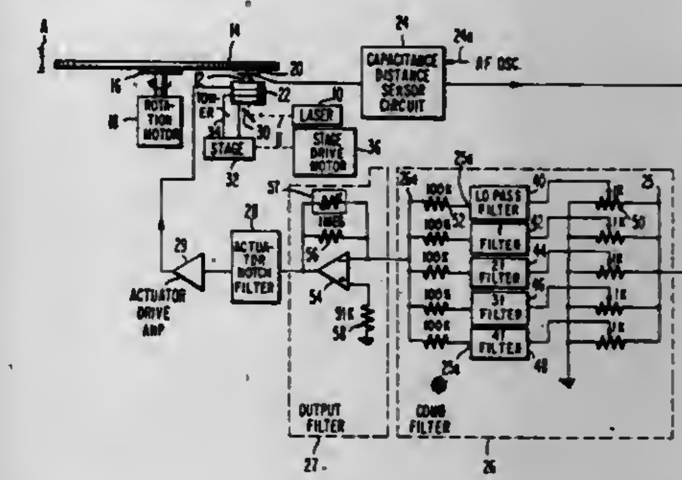

d. means coupled to said lens and responsive to the output of said filter means for positioning said lens in a manner which opposes the departure of the sensed capacitance from said predetermined value.

4,300,227
REPLICABLE OPTICAL RECORDING MEDIUM

Alan E. Bell, East Windsor, N.J., assignor to RCA Corporation, New York, N.Y.

Filed Oct. 17, 1979, Ser. No. 85,546

Int. Cl.[3] G11B *7/26, 7/24*

U.S. Cl. 369—84 **25 Claims**

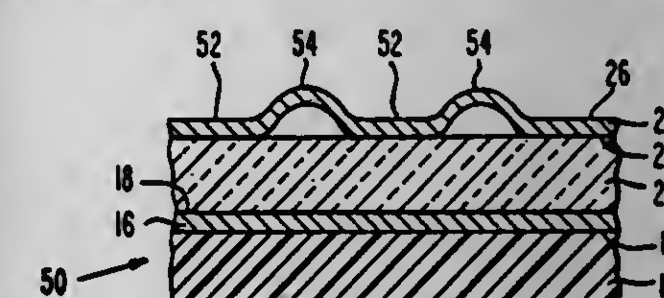

1. In a recording medium for use in an optical recording-readout system employing light of a certain wavelength which comprises,

a light reflective layer which reflects light at said wavelength;

a light transmissive layer, overlying said reflective layer, of a material which is substantially transparent at said wavelength, and has a thickness greater than about 10 nanometers; and

a light absorptive layer overlying said transmissive layer of a material which is absorptive of light at said wavelength;

wherein said light transmissive layer melts, sublimes or decomposes at a temperature at least 300° C. less than the melting temperature of the material which comprises said light absorptive layer;

the improvement which comprises, the light transmissive layer being comprised of an organic material which forms a smooth coating substantially free of defects; and

the light absorptive layer having a melting temperature greater than 1000° C.

4,300,228

PICKUP ARM CONTROL MECHANISM AND ELECTRICAL CIRCUITRY THEREFORE

Udo Milutzki; Dietwald Schotte, both of Walldorf, Fed. Rep. of Germany, and Jeffrey Johnson, New Orleans, La., assignors to Braun Aktiengesellschaft, Kronberg, Fed. Rep. of Germany

Continuation of Ser. No. 934,074, Aug. 16, 1978, abandoned. This application Oct. 20, 1980, Ser. No. 198,478

Claims priority, application Fed. Rep. of Germany, Aug. 19, 1977, 2737387

Int. Cl.³ G11B *17/00*

U.S. Cl. 369—216 **12 Claims**

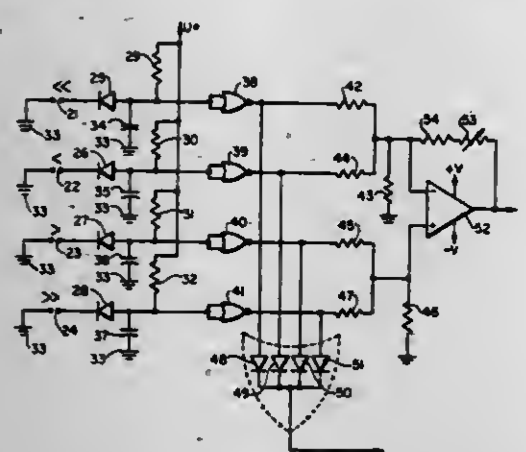

1. In apparatus for controlling movements of the tone arm of a record player relative to turntable in response to actions of a user, said apparatus including reversible variable speed actuator means for controlling the speed and direction of rotation of the pickup supporting end of the tone arm in response to command signals, an improved command signal generator comprising:

first command signal generating means, said first signal generating means being responsive to an action of the user for generating a first actuator means command signal, said first command signal indicating the user's desire to cause the tone arm to be raised and moved in a first direction at a first speed;

second command signal generating means, said second signal generating means being responsive to another action of the user for generating a second actuator means command signal, said second command signal indicating the user's desire to cause the tone arm to be raised and moved in the first direction at a second speed;

means connected to said first and second command signal generating means for summing said first and second command signals to generate a third command signal indicating the user's desire to cause the tone arm to be moved in the first direction at a third speed; and

means for applying said command signals to a tone arm actuator.

4,300,229

TRANSMITTER AND RECEIVER FOR AN OTHOGONALLY MULTIPLEXED QAM SIGNAL OF A SAMPLING RATE N TIMES THAT OF PAM SIGNALS, COMPRISING AN N/2-POINT OFFSET FOURIER TRANSFORM PROCESSOR

Botaro Hirosaki, Tokyo, Japan, assignor to Nippon Electric Co., Ltd., Tokyo, Japan

Filed Feb. 15, 1980, Ser. No. 121,943

Claims priority, application Japan, Feb. 21, 1979, 54/19364; Feb. 21, 1979, 54/19365; Feb. 21, 1979, 54/19366; Dec. 27, 1979, 54/170724

Int. Cl.³ H04J *11/00, 1/02*

U.S. Cl. 370—20 **17 Claims**

1. A converter for digitally carrying out conversion between a plurality of baseband real PAM digital signal sequences, 2L in number, having a slow sampling rate of 1/T hertzes and synchronized with one another and an orthogonally multiplexed real QAM digital signal sequence of a fast sampling rate of N/T hertzes, where N represents an even integer that is not less than 2L, said converter being operable as a predetermined one of a transmitter for converting said real PAM digital signal sequences to said real QAM digital signal sequence and a receiver for converting said real QAM digital signal sequence to said real PAM digital signal sequences and comprising:

first means for digitally carrying out conversion between said real PAM digital signal sequences and a plurality of first-type complex digital signal sequences of twice said slow sampling rate, equal in number to a predetermined one of N and N/2 and to N/2 when said converter is operable as said transmitter and said receiver, respectively;

N/2-point offset discrete Fourier transform processing means for subjecting prescribed ones of said first-type complex digital signal sequences and a plurality of second-type complex digital signal sequences of twice said slow sampling rate, equal in number to a prescribed one of N and N/2, to N/2-point offset discrete Fourier transform processing at a period of T/2 second to produce said second-type and said first-type complex digital signal

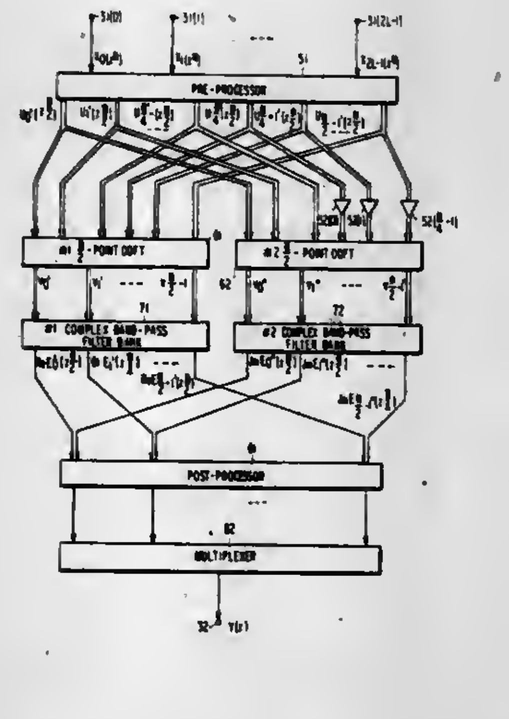

sequences when said converter is operable as said transmitter and said receiver, respectively;

filter means comprising a plurality of digital filter units, equal in number to said prescribed one of N and N/2, said digital filter units being operable at twice said slow sampling rate and having a prescribed effective bandwidth and linear phase slopes stepwise different from one another among a bank of the digital filter units, N/2 in number, for carrying out band limitation on preselected ones of said second-type complex digital signal sequences and a plurality of third-type complex digital signal sequences of twice said slow sampling rate, respectively, said third-type complex digital signal sequences being equal in number to N/2 and to said predetermined one of N and N/2 when said converter is operable as said transmitter and said receiver, respectively, said filter means thereby producing said third-type and said second-type complex digital signal sequences when said converter is operable as said transmitter and said receiver, respectively; and

second means for digitally carrying out conversion between said third-type complex digital signal sequences and said real QAM digital signal sequence.

4,300,230

DIGITAL SWITCHING ARRANGEMENTS FOR STORED PROGRAM CONTROL TELECOMMUNICATIONS SYSTEMS

Alexander S. Philip, Dorset; Allen Parkinson, Chester; Michael G. Foxton, Suffolk; Frederick H. Rees, London; Graham Howard, Coventry, and Anthony E. Shuttleworth, Burbage, all of England, assignors to The Plessey Company Limited, Ilford; The Post Office, London; Standard Telephones & Cables Limited, London and The General Electric Company Limited, London, all of England

Continuation-in-part of Ser. No. 871,513, Jan. 23, 1978, abandoned. This application Oct. 15, 1979, Ser. No. 85,037

Claims priority, application United Kingdom, Apr. 5, 1977, 14409/77

Int. Cl.³ H04J *3/14;* **H04Q** *11/04*

U.S. Cl. 370—63 **7 Claims**

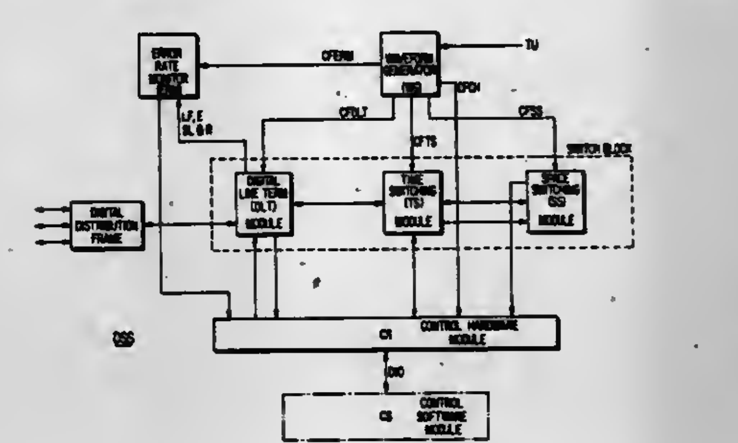

1. A digital switching arrangement for use in a processor controlled telecommunications switching exchange, the arrangement comprising:

an exchange control processor,

a digital switching network arranged to provide connection paths between any channel on any of a number of incoming time division multiplexed exchange highways and any channel on any of a number of outgoing time division multiplexed exchange highways,

a switching network connection control equipment arranged to control the operation of the digital switching network in the setting-up and clearing-down of connections, and

a control arrangement;

said control-arrangement including:

a plurality of output buffer registers forming an output queue into which output messages are written in time-of-arrival order by the exchange control processor, each output message including information indicative of the identities of the incoming and outgoing exchange highways and channels involved in a switching network path,

a plurality of input buffer registers forming a time-of-arrival ordered input queue from which input messages are read by the exchange control processor, each input message including information indicative of connection handling operations, and

a plurality of central control units, each connected to receive information from the output buffer registers and to pass information to the input buffer registers and to intercommunicate with the switching network path connection control equipment, each central control unit being arranged to concurrently process an output message by performing a stored sequence of operations in accordance with the processing operation required to control the switching network path connection control equipment so as to process the required network operation, and at the end of the processing operation to generate in the input queue an input message indicative of the actions performed in the handling of each output message.

4,300,231

DIGITAL SYSTEM ERROR CORRECTION ARRANGEMENT

Bryan S. Moffitt, Eatontown, N.J., assignor to Bell Telephone Laboratories, Incorporated, Murray Hill, N.J.

Filed Dec. 31, 1979, Ser. No. 108,847

Int. Cl.³ H04J *3/02*

U.S. Cl. 370—86 **7 Claims**

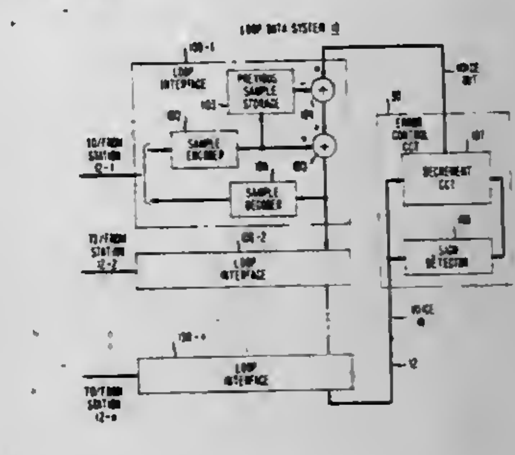

1. An error correction arrangement for use in a continuous loop communication system where a plurality of communication stations have access thereto and wherein the composite communication signal transmitted around said loop at any particular time may be represented as an accumulated sum of the individual binary digital representations of instantaneous values of said signal, said error correction circuit comprising

means for temporarily storing each said composite accumulated sum,

means for determining the sign of the magnitude of each said stored accumulated sum,

signal modifying means for subtracting a predetermined digital value from said temporarily stored accumulated sum at selected periodic intervals, and

means for establishing the sign of said predetermined digital value in accordance with said determined sign of each said stored accumulated sum.

4,300,232

SELF SYNCHRONIZED MULTIPLEXER/DEMULTIPLEXER

David S. Kato, Fountain Valley, Calif., assignor to Ford Aerospace & Communications Corporation, Detroit, Mich.

Filed Nov. 9, 1979, Ser. No. 92,792

Int. Cl.³ H04J *3/06*

U.S. Cl. 370—100 **8 Claims**

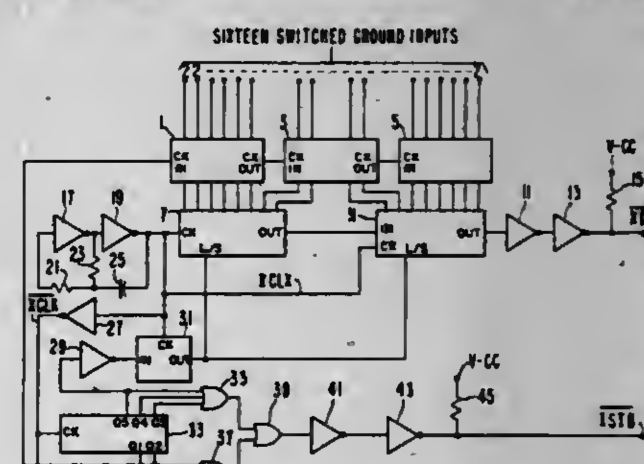

1. An apparatus for multiplexing parallel data into serial data and demultiplexing the serial data into parallel form comprising:

a data transmission line connected to a multiplexer and to a demultiplexer for conveying said serial data from said multiplexer to said demultiplexer; and

a strobe line connected to said multiplexer and to said demultiplexer for controlling both bit synchronization and word synchronization of said serial data;
wherein said strobe line contains word synchronization signals and said demultiplexer comprises a phase lock loop to regenerate bit synchronizing signals from said word synchronizing signals.

4,300,233

NOISE ASSESSMENT OF PCM REGENERATORS

Alan J. Gibbs, Cheltenham, Australia, assignor to Australian Telecommunications Commission, Melbourne, Australia

Filed Nov. 13, 1979, Ser. No. 93,228

Claims priority, application Australia, Nov. 15, 1978, PD6790

Int. Cl.³ H04B *3/46, 1/60*

U.S. Cl. 371—22 **18 Claims**

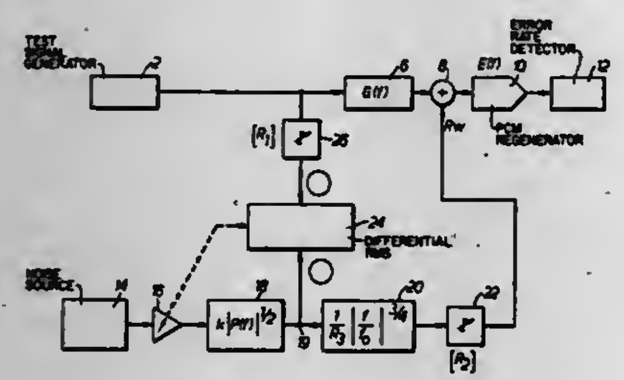

1. An instrument for testing susceptibility of PCM regenerators to near end crosstalk noise said instrument comprising:
(a) an artificial line having a voltage transfer function G(f), corresponding to the voltage transfer function of a pair of wires in a multipair cable,
(b) an adding circuit having one input coupled to the output of said artificial line, and an output connectable to a PCM regenerator to be tested,
(c) means for applying a test signal having a power spectral density P(f) corresponding to that produced at the output of a PCM regenerator to said artificial line,
(d) means for generating a noise signal having the same spectral density P(f) as said test signal,
(e) a signal path between the output of said means for generating a noise signal and another input of said adding circuit said path including in series (i) a filter having a voltage transfer function, the magnitude of which is:

$$1/R_3|f/f_0|^{\frac{1}{2}}$$

where R_3 is a constant and $2f_o$ is the clock rate of the PCM system, and (ii) an attenuator
adjusted to vary the effective noise due to near end crosstalk applied to the regenerator under test.

4,300,234

ADDRESS PATTERN GENERATOR FOR TESTING A MEMORY

Hiromi Maruyama; Takashi Tokuno; Masao Shimizu, all of Gyoda; Kohji Ishikawa, Funabashi; Naoaki Narumi, Tokyo, and Osamu Ohguchi, Sayama, all of Japan, assignors to Nippon Telegraph and Telephone Public Corporation and Takeda Riken Kogyo Kabushiki Kaisha, both of Tokyo, Japan

Filed Oct. 10, 1979, Ser. No. 83,527

Claims priority, application Japan, Oct. 11, 1978, 53-124910

Int. Cl.³ G01R *31/28*

U.S. Cl. 371—27 **6 Claims**

1. An address pattern generator for testing a memory, comprising:
a plurality of fixed registers respectively having loaded therein an initial value, a boundary value and an operand;
a plurality of address operating circuits, each selecting a desired one of the fixed registers to take out the value loaded therein and to perform an operation using the value; and
a plurality of output registers, each selecting a desired one of the address operating circuits to take out its output;

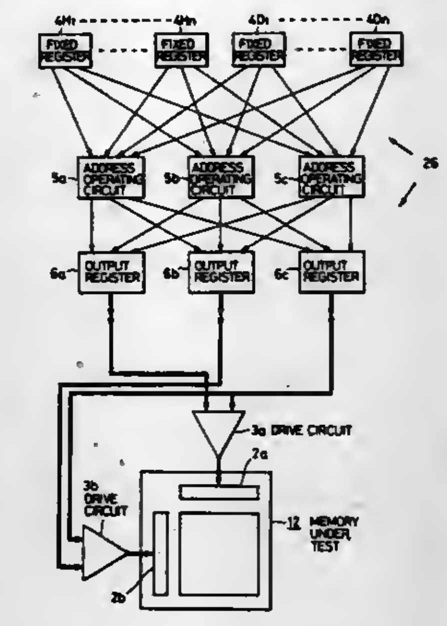

whereby an address pattern for the memory under test is obtained from the plurality of output registers.

4,300,235

COMMUNICATIONS SYSTEMS

John D. Outram, Bognor Regis, England, assignor to Plessey Handel und Investments AG., Zug, Switzerland

Filed Jan. 2, 1980, Ser. No. 109,103

Claims priority, application United Kingdom, Jan. 3, 1979, 00119/79

Int. Cl.³ H04K *1/04*

U.S. Cl. 375—1 **7 Claims**

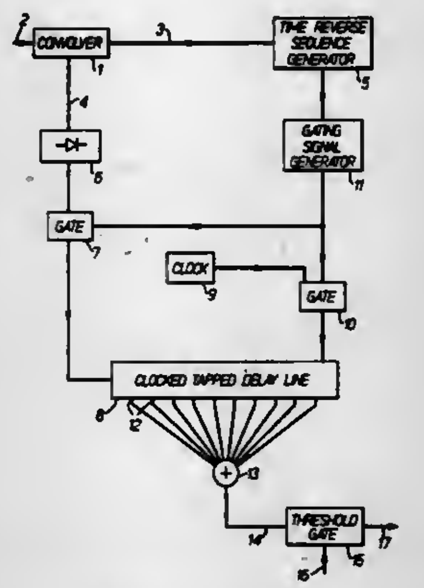

1. The receiver of a spread communication system comprising a convolver to one end of which a message is fed comprising a plurality of bits, the convolver being long enough in the direction of signal propagation therethrough to store contemporaneously two message bits each of which comprises a plurality of sub-bits or chips having a predetermined sequence, signal generator means for generating reference bits at one-to-one mark-space ratio, each reference bit comprising chips or sub-bits corresponding to the reverse of the said predetermined sequence, the generator means being arranged to feed the other end of said convolver with the reference bits so that, when a reference bit travelling in one direction passes a corresponding message bit travelling in the opposite direction, a 'match' occurs and an output pulse is delivered from the convolver, a clocked tapped analogue delay line means for receiving rectified output pulses from the convolver, clock pulse generator means for providing clock pulses, gating means between said clock pulse generator means and said clocked tapped delay line means for selectively providing or not providing said clock pulses to said clocked tapped delay line means, and gating signal forming means responsive to the generator means for forming a gating signal which is applied to the gating means so that the clock pulses are not applied to the clocked tapped delay line means during those times when a reference bit is partly in or partly out of the convolver.

4,300,236

RADIO SIGNALLING SYSTEMS

William D. Gilmour, deceased, late of Glastonbury, England by Margaret Gilmour, executrix, assignor to Lewis Security Systems Limited, Surrey, England

Continuation of Ser. No. 778,150, Mar. 16, 1977, Pat. No. 4,162,448. This application Jan. 8, 1979, Ser. No. 1,731

Int. Cl.³ H04L *27/00;* **H04B** *12/00*

U.S. Cl. 375—23 **8 Claims**

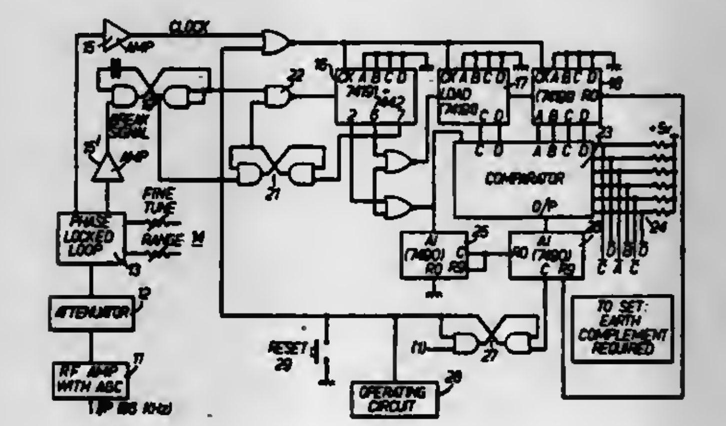

1. A radio signalling system including a number of portable tokens each capable of transmitting signals in the form of a carrier frequency which is common to the tokens, with spaced modulation pulses superimposed on the carrier and defining carrier bursts between successive of said pulses, the number of carrier frequency cycles in said carrier bursts between successive modulation pulses being different for different tokens, and a receiver including a carrier cycle counter and capable of distinguishing between received signals from tokens with different characteristic numbers of cycles in their bursts, wherein for any one token the number of carrier frequency cycles is the same in each burst of transmitted signals.

4,300,237

SINGLE SIDEBAND MODULATION

Harvey L. Morgan, 8804 Graywood Dr., Dallas, Tex. 75231

Filed Oct. 3, 1977, Ser. No. 838,542

Int. Cl.³ H04B *1/68*

U.S. Cl. 455—109 **4 Claims**

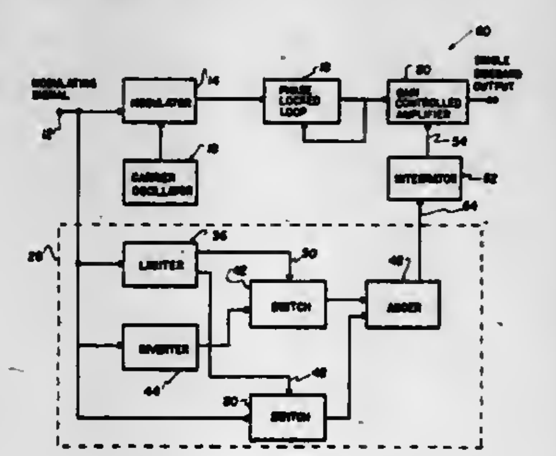

1. A single sideband modulation system, comprising:
a double sideband suppressed carrier modulator responsive to a carrier signal and a modulating signal,
a phase locked loop circuit receiving the output of the modulator and tuned to one of the sidebands of the modulator output,
wherein the phase locked loop circuit includes means for producing an output tracking the signal contained in said one sideband, except for the tracking output being of substantially constant amplitude, and
further including amplifier means for applying to said loop circuit output a gain factor of controllable magnitude.

4,300,238

CONTROL ASSEMBLY FOR ELECTRONIC TUNING RECEIVERS

Hideo Konishi; Kazunori Matsuoka, and Takao Gouya, all of Higashihiroshima, Japan, assignors to Sharp Kabushiki Kaisha, Osaka, Japan

Filed Feb. 26, 1980, Ser. No. 124,744

Claims priority, application Japan, Feb. 26, 1979, 54-22403

Int. Cl.³ H03J *7/30*

U.S. Cl. 455—161 **4 Claims**

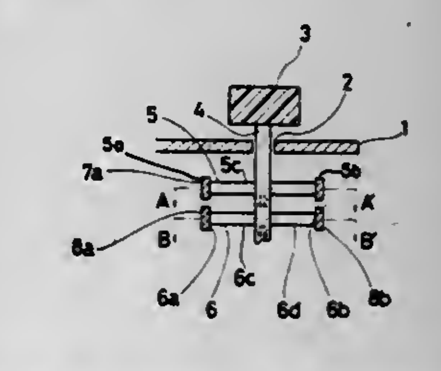

1. An electronic tuning receiver including a swept frequency local oscillator, the improvement comprising: an operator operable element for controlling the sweep speed of the local oscillation frequency and for selecting DISTANCE and LOCAL receiver modes at the same time upon the actuation thereof.

4,300,239

OPTICAL REPEATER MONITORING SYSTEM

Hiroharu Wakabayashi, Tokyo, and Yasuhiko Niiro, Yokohama, both of Japan, assignors to Kokusai Denshin Denwa Co., Ltd., Tokyo, Japan

Filed Jan. 24, 1980, Ser. No. 115,236

Claims priority, application Japan, Feb. 8, 1979, 54-12806

Int. Cl.³ H04B *9/00*

U.S. Cl. 455—601 **2 Claims**

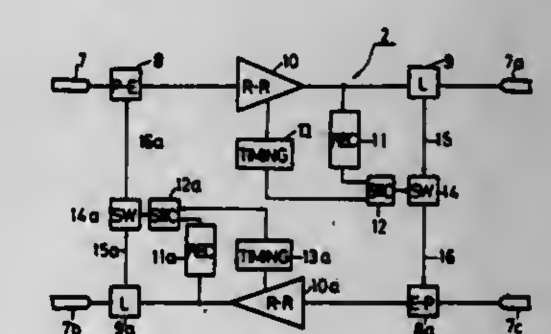

1. An optical repeater monitoring system for a digital transmission circuit inserted in an optical fiber transmission line comprising;
(a) a terminal station transmitting a repeater recognition digital signal for designating a particular repeater to be tested and a test digital signal following immediately after said repeater recognition signal to said optical fiber transmission line,
(b) the repeater designated by said repeater recognition

signal having a return optical path in said transmission line provided by an optical switch in said repeater to be turned ON during said repeater recognition signal and said test signal,

(c) said optical switch being turned ON when said repeater detects said repeater recognition signal, and turned OFF when said repeater detects termination of said repeater recognition signal and said repeater test signal,

(d) said return path reflecting said repeater recognition signal and said repeater test signal to said terminal station, and

(e) said terminal station comparing said test signal which is transmitted with said test signal which is reflected from said repeater and determining an error rate in said transmission line.

DESIGN PATENTS

GRANTED NOV. 10, 1981

ERRATA

For CLASS	See PATENT NO.
D34–009	261,720
D06–135	261,744
D34–015	261,750
D34–035	261,751
D10–110	261,786

DESIGNS

NOVEMBER 10, 1981

261,695
ATHLETIC SHOE WITH POCKET
Robert J. Gamm, Olivette, Mo., assignor to Envoys U.S.A., Inc., St. Louis, Mo.
Filed Jan. 28, 1980, Ser. No. 116,279
Term of patent 14 years
Int. Cl. D2—*04*
U.S. Cl. D2—309

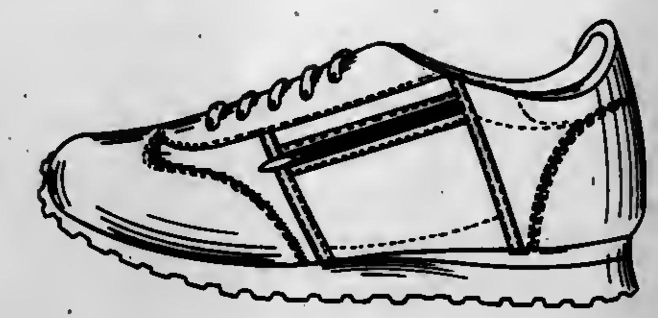

261,696
SHOE BOTTOM
Lee D. Taicher, 58 W. 58th St., New York, N.Y. 10019
Filed Feb. 26, 1980, Ser. No. 124,921
Term of patent 14 years
Int. Cl. D2—*04*
U.S. Cl. D2—322

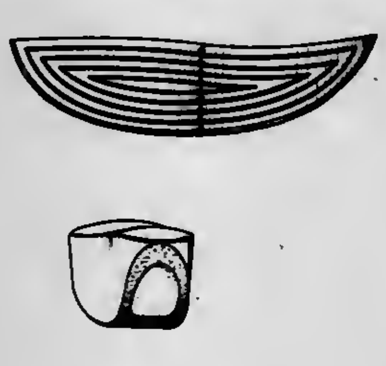

261,697
GLOVE
Concepcion Marigomez, 65-50 Wetherole St., Rego Park, N.Y. 11374
Filed Jan. 31, 1979, Ser. No. 8,799
Claims priority, application Spain, Sep. 15, 1978, 238143
Term of patent 14 years
Int. Cl. D2—*06*
U.S. Cl. D2—360

261,698
BELT ATTACHABLE SPRAY CAN HOLSTER
John M. Humble, 2027 15th St. S., Seattle, Wash. 98144
Filed Jan. 2, 1979, Ser. No. 288
Term of patent 14 years
Int. Cl. D2—*99;* D6—*06*
U.S. Cl. D2—400

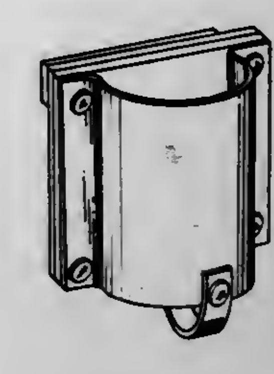

261,699
CASE FOR A PHONOGRAPH OR THE LIKE
Kenneth R. Wilkes, East Aurora, N.Y., assignor to The Quaker Oats Company, Chicago, Ill.
Filed Jan. 11, 1980, Ser. No. 111,288
Term of patent 14 years
Int. Cl. D3—*02*
U.S. Cl. D3—73

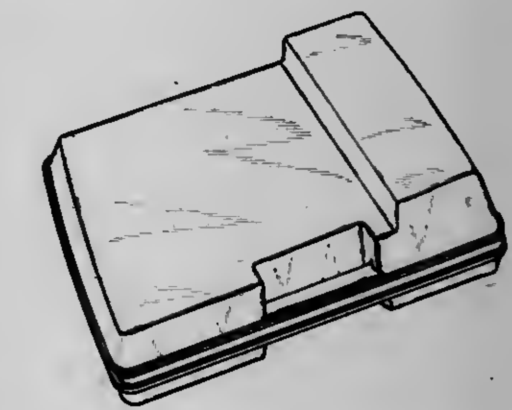

261,700
BRUSH HANDLE
Salvatore J. Megna, 3721 Fair Oaks Blvd., Sacramento, Calif. 95825
Filed Apr. 25, 1979, Ser. No. 33,040
Term of patent 14 years
Int. Cl. D4—*02*
U.S. Cl. D4—31

261,701
SAMPLE DISPLAY STAND
Ernest G. Ovitz, III, Galva, Ill., assignor to John H. Best and Sons, Inc., Galva, Ill.
Filed Mar. 12, 1979, Ser. No. 19,575
Term of patent 3½ years
Int. Cl. D20—*02*
U.S. Cl. D6—20

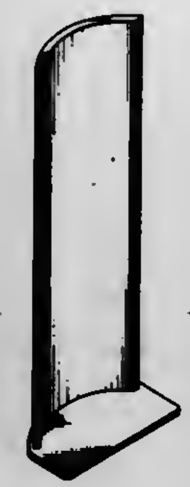

261,702
CHAIR
Robert Whalen, Toronto, Canada, assignor to WNF Design Incorporated, Toronto, Canada
Filed Sep. 5, 1978, Ser. No. 939,929
Term of patent 14 years
Int. Cl. D6—*01*
U.S. Cl. D6—26

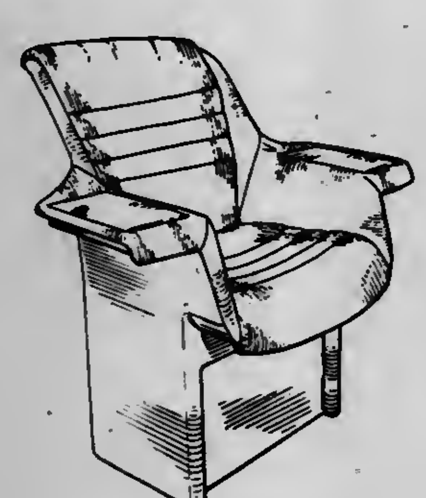

261,703
MUSICAL INSTRUMENT AND ACCESSORY STAND
Richard L. Plummer, 1720 Newport Ave., Apt. 1, Long Beach, Calif. 90804
Filed Apr. 9, 1979, Ser. No. 28,506
Term of patent 14 years
Int. Cl. D06—*06*
U.S. Cl. D6—28

261,704
PORTABLE CLOTHES HANGER
George E. Parker, 1408 W. 8 St., Roswell, N. Mex. 88201
Filed Jan. 25, 1980, Ser. No. 115,408
Term of patent 14 years
Int. Cl. D6—*06*; D8—*08*
U.S. Cl. D6—28

261,705
LOUNGE OR SIMILAR ARTICLE
Barry R. Land, 6609 W. 79th St., Overland Park, Kans. 66204, and Virginia L. Proctor, 6536 W. 49th St., Mission, Kans. 66202
Filed Nov. 2, 1979, Ser. No. 90,523
Term of patent 14 years
Int. Cl. D6—*01*
U.S. Cl. D6—38

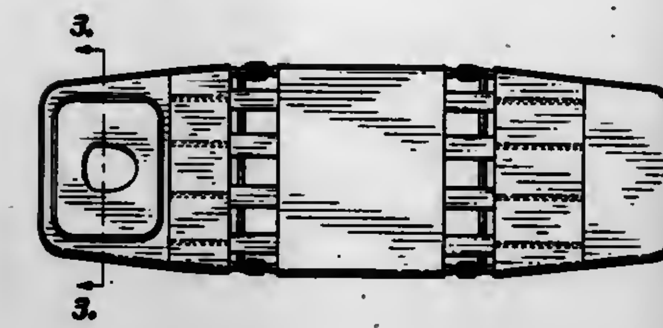

261,706
SOFA
Michael A. Bick, Manhattan Beach, Calif., assignor to Shelly & Anderson Furniture Mfg. Co., Inc., Compton, Calif.
Filed May 21, 1979, Ser. No. 41,103
Term of patent 14 years
Int. Cl. D6—*01*
U.S. Cl. D6—63

261,707
STAND FOR A GUITAR
K. D. Mears, 219 Cottonwood St., Woodland, Calif. 95695
Filed May 7, 1979, Ser. No. 36,782
Term of patent 14 years
Int. Cl. D6—*06*
U.S. Cl. D6—85

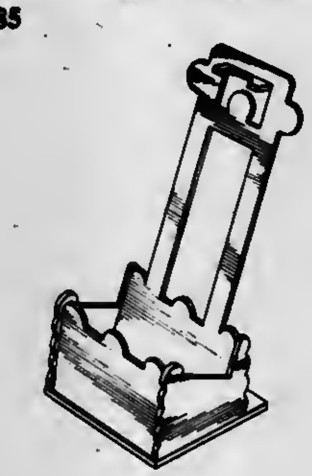

261,708
SPEAKER STAND
Ronald Ligrano, Los Angeles, Calif., assignor to Thunderfoot Engineering, Los Angeles, Calif.
Filed May 21, 1979, Ser. No. 40,928
Term of patent 14 years
Int. Cl. D6—*99*
U.S. Cl. D6—85

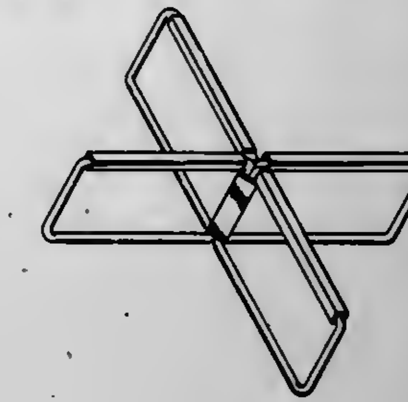

261,709
PIVOTING WALL BRACKET
Arlin P. Hartman, 715 Balboa Dr., Champaign, Ill. 61820
Filed Jul. 2, 1979, Ser. No. 53,691
Term of patent 14 years
Int. Cl. D6—*06*; D8—*08*
U.S. Cl. D6—114

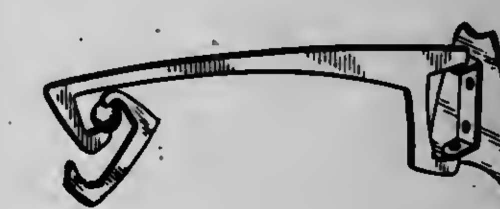

261,710
CHECK-OUT COUNTER
Robert R. Onstead, 1019 Daria, Houston, Tex. 77079
Filed Jan. 7, 1980, Ser. No. 110,260
Term of patent 14 years
Int. Cl. D6—*03*
U.S. Cl. D6—143

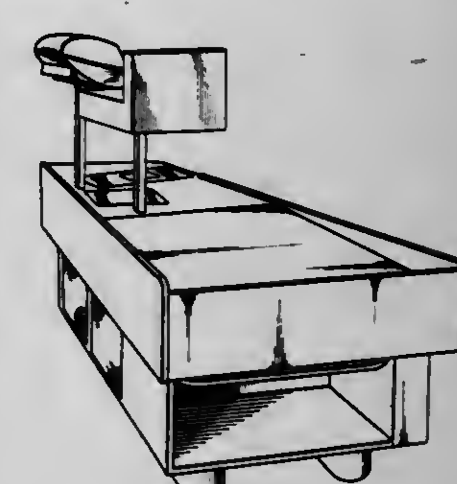

261,711
ROTATABLE DISPLAY RACK
Thomas Mulvihill, Cresskill, N.J., assignor to Textron Inc., Providence, R.I.
Filed Nov. 7, 1978, Ser. No. 958,480
Term of patent 14 years
Int. Cl. D20—*02*
U.S. Cl. D6—145

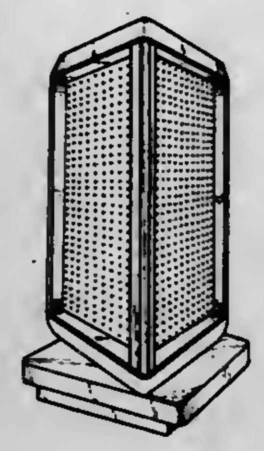

261,712
TABLE OR SIMILAR ARTICLE
Irwin J. Ferdinand, Glencoe; Richard Sylvan, Glenview, and Herbert Baisch, Niles, all of Ill., assignors to Hirsh Company, Skokie, Ill.
Filed Jan. 29, 1979, Ser. No. 7,486
Term of patent 14 years
Int. Cl. D6—*03*
U.S. Cl. D6—178

261,713
DESK
Frank Curatolo, 130 Overlook Ave., Hackensack, N.J. 07602
Filed Jan. 15, 1979, Ser. No. 3,283
Term of patent 14 years
Int. Cl. D6—*04*
U.S. Cl. D6—181

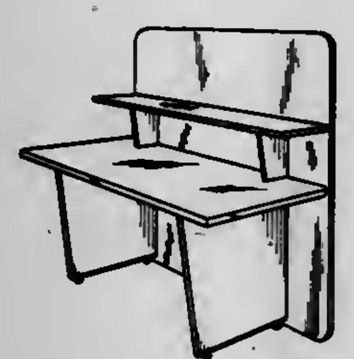

261,714
PICTURE FRAME
Bernard H. Gurevitz, 2 Tudor City Pl., New York, N.Y. 10017
Division of Ser. No. 765,373, Feb. 3, 1977. This application Jul. 25, 1979, Ser. No. 60,820
Term of patent 14 years
Int. Cl. D6—*07*
U.S. Cl. D6—232

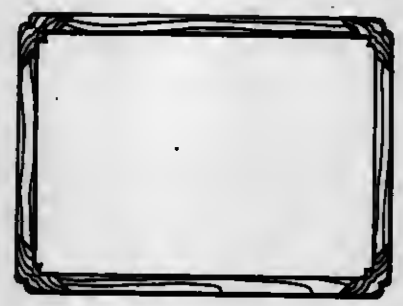

261,715
DISH OR THE LIKE
Robert H. C. M. Daenen, Hekelgem, Belgium, assignor to Dart Industries Inc., Los Angeles, Calif.
Filed Apr. 23, 1979, Ser. No. 32,064
Term of patent 14 years
Int. Cl. D7—*01*
U.S. Cl. D7—1

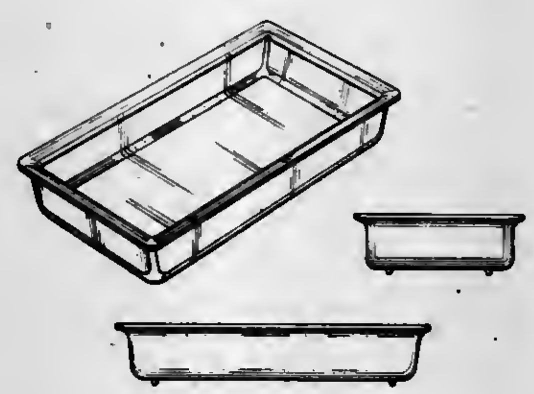

261,716
HOLDER FOR CONDIMENT CONTAINERS
Richard S. Berzack, 5 Maple La., Oxford, Mich. 48051
Filed Aug. 30, 1979, Ser. No. 71,365
Term of patent 14 years
Int. Cl. D7—*06*
U.S. Cl. D7—52

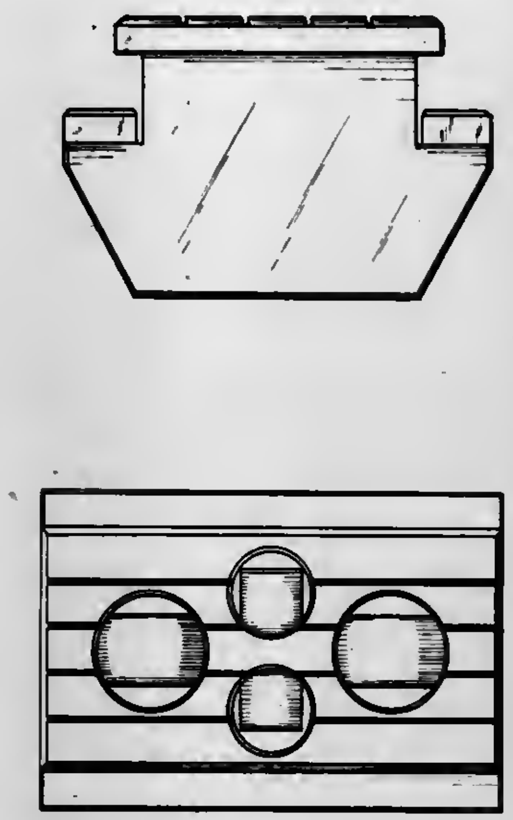

261,717
CANISTER
Howard I. Mont, New York, N.Y., assignor to The Teacrest Corporation, New York, N.Y.
Filed Sep. 17, 1979, Ser. No. 75,888
Term of patent 14 years
Int. Cl. D07—*07*
U.S. Cl. D7—79

261,718
MACHINE FOR PROCESSING FOOD
Marc S. Harrison, Portsmouth, R.I., assignor to Omnichef, Inc., Greenwich, Conn.
Filed Apr. 4, 1979, Ser. No. 26,996
Term of patent 14 years
Int. Cl. D07—*04*
U.S. Cl. D7—153

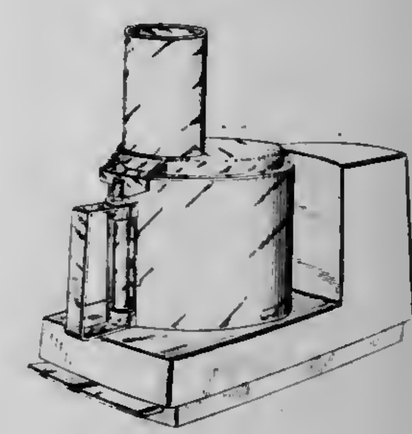

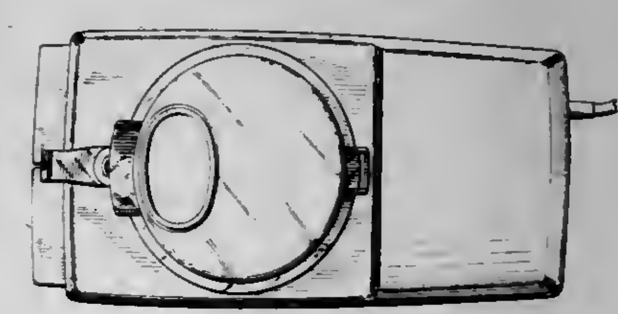

261,719
MIXER-COOKER KITCHEN MACHINE
Oswald Gibiec, Wuppertal, Fed. Rep. of Germany, assignor to Vorwerk & Co. Elektrowerke KG, Wuppertal, Fed. Rep. of Germany
Filed Mar. 27, 1979, Ser. No. 24,313
Claims priority, application Fed. Rep. of Germany, Dec. 4, 1978, 14146
Term of patent 14 years
Int. Cl. D07—*04*
U.S. Cl. D7—159

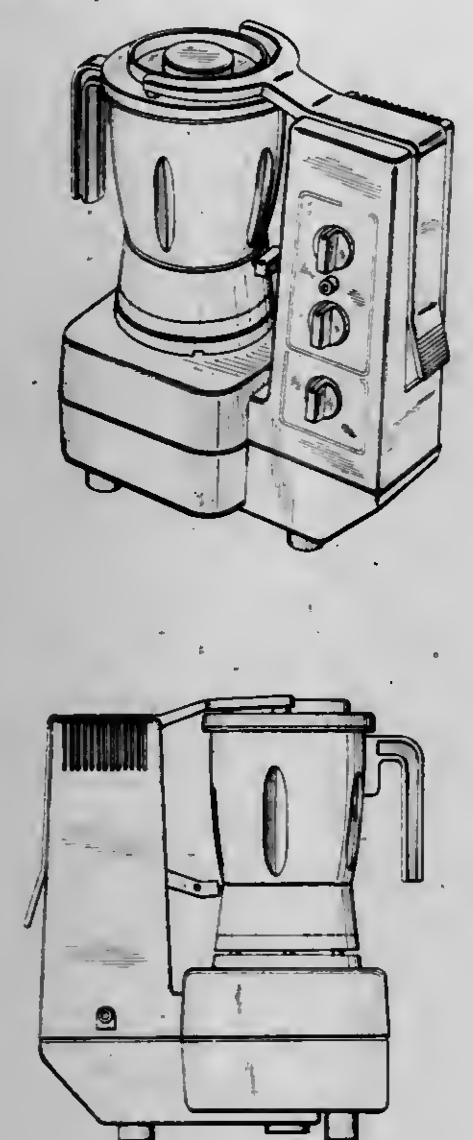

261,720
STEP-ON WASTEBASKET
William E. Brazis, Medina, Ohio, assignor to Rubbermaid Incorporated, Wooster, Ohio
Filed Aug. 31, 1979, Ser. No. 71,775
Term of patent 14 years
Int. Cl. D7—*07*
U.S. Cl. D34—9

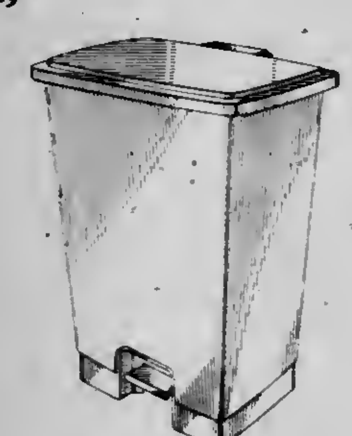

261,721
SNOW REMOVAL IMPLEMENT
Donald E. Oerlemans, 218 Summit Ave., Westville, N.J. 08093
Filed Mar. 5, 1979, Ser. No. 17,701
Term of patent 14 years
Int. Cl. D8—*01*
U.S. Cl. D8—10

261,722
OIL FILTER WRENCH
Ulric M. Rocheleau, 135 Pearl St., St. Albans, Vt. 05478
Filed Dec. 5, 1979, Ser. No. 100,511
Term of patent 14 years
Int. Cl. D8—*05*
U.S. Cl. D8—22

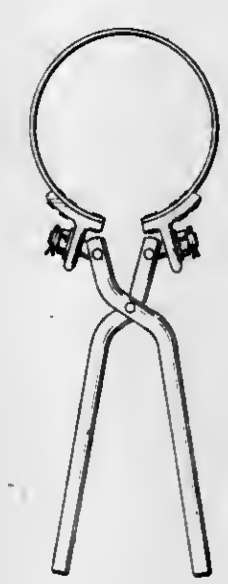

261,723
INWARD VENTED PAINT STIRRER
John L. Haller, 7249 Carrizo Dr., La Jolla, Calif. 92037
Filed Oct. 9, 1979, Ser. No. 83,542
Term of patent 14 years
Int. Cl. D7—*99*; D8—*05*
U.S. Cl. D7—102

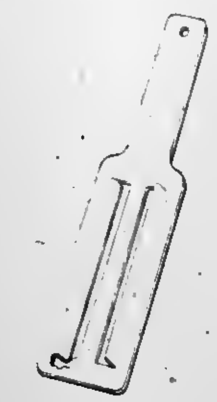

261,724
HANDLE STUD FOR LUGGAGE OR THE LIKE
Lazlo Bako, Woodcliff Lake, N.J., assignor to Presto Lock Company, Division of Walter Kidde & Company, Inc., Garfield, N.J.
Filed Apr. 3, 1979, Ser. No. 26,571
Term of patent 14 years
Int. Cl. D8—*06*; D3—*99*
U.S. Cl. D8—321

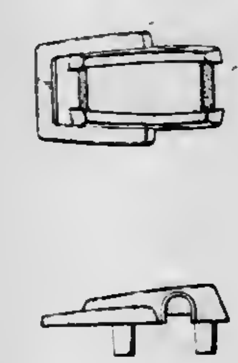

261,725
HANDLE STUD
Edward M. Stolarz, Yorktown Heights, N.Y., assignor to Presto Lock Company, Division of Walter Kidde & Company, Inc., Garfield, N.J.
Filed Feb. 8, 1980, Ser. No. 119,980
Term of patent 14 years
Int. Cl. D8—*06*
U.S. Cl. D8—321

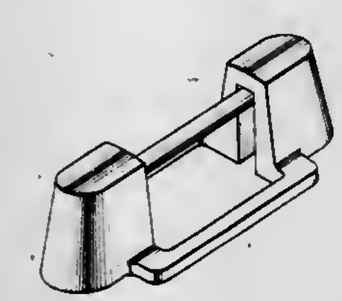

261,726
COMBINED DOOR LEVER AND ESCUTCHEON UNIT
Pasquale Valli, Renate, Italy, assignor to Valli & Colombo S.p.A., Italy
Filed Apr. 7, 1980, Ser. No. 138,211
Claims priority, application Italy, Oct. 5, 1979, 227698/79[U]
Term of patent 14 years
Int. Cl. D8—*06, 09*
U.S. Cl. D8—301

261,727
TEAR STRIP PACKAGING CONTAINER
Robert G. McMullan, Oakville, Canada, assignor to SCM (Canada) Limited, Don Mills, Canada
Filed Feb. 8, 1979, Ser. No. 10,250
Term of patent 14 years
Int. Cl. D9—*03*
U.S. Cl. D9—416

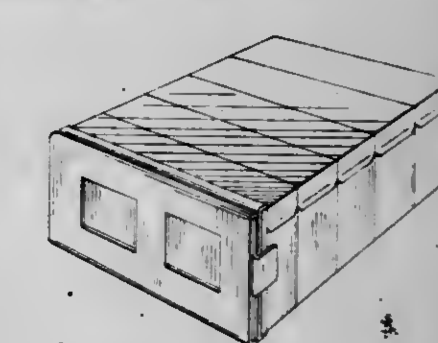

261,728
PACKAGING BOX OR SIMILAR ARTICLE
John J. Khula, 4948 Southcrest Ave., San Diego, Calif. 92110, and Drake A. Henry, 4441 Camrose Ave., San Diego, Calif. 92122
Filed Nov. 6, 1978, Ser. No. 958,257
Term of patent 14 years
Int. Cl. D9—*03*
U.S. Cl. D9—418

261,729
PENDANT DISPLAY CARD
Jeffrey A. Feibelman, Cranston, R.I., assignor to A & H Mfg. Co., Johnston, R.I.
Filed Oct. 1, 1979, Ser. No. 80,330
Term of patent 14 years
Int. Cl. D9—*03*
U.S. Cl. D9—457

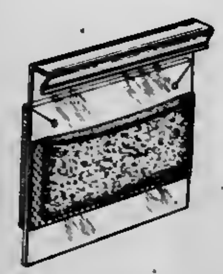

261,730
CLOCK
Creath Q. Linville, 6501 La Paloma Oeste, Phoenix, Ariz. 85014
Filed Feb. 2, 1979, Ser. No. 9,224
Term of patent 14 years
Int. Cl. D10—*01*
U.S. Cl. D10—12

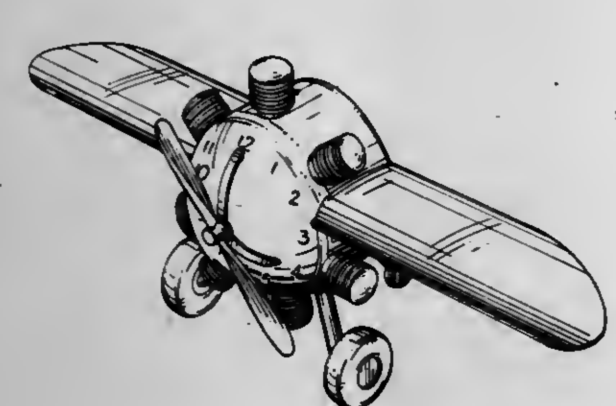

261,731
DIGITAL WATCH
Masafumi Yamagami; Shigeaki Hayashi, and Harumi Tatsugami, all of Osaka, Japan, assignors to Sharp Corporation, Osaka, Japan
Filed Nov. 8, 1979, Ser. No. 92,627
Claims priority, application Japan, May 9, 1979, 54-18980
Term of patent 14 years
Int. Cl. D10—*02*
U.S. Cl. D10—30

261,732
DIGITAL WATCH
Masafumi Yamagami; Shigeaki Hayashi, and Harumi Tatsugami, all of Osaka, Japan, assignors to Sharp Corporation, Osaka, Japan
Filed Nov. 8, 1979, Ser. No. 92,628
Term of patent 14 years
Int. Cl. D10—*02*
U.S. Cl. D10—30

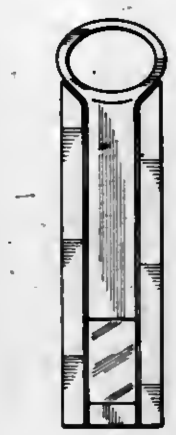

261,733
WRISTWATCH
Kaoru Iida, Suwa, Japan, assignor to Kabushiki Kaisha Suwa Seikosha, Tokyo, Japan
Filed Mar. 2, 1979, Ser. No. 16,999
Claims priority, application Japan, Sep. 4, 1978, 53-37563
Term of patent 3½ years
Int. Cl. D10—*02*
U.S. Cl. D10—39

261,734
WRISTWATCH
Tsuyoshi Onodera, Tokyo, Japan, assignor to Kabushiki Kaisha Daini Seikosha, Tokyo, Japan
Filed Aug. 31, 1979, Ser. No. 71,182
Claims priority, application Japan, Mar. 2, 1979, 54-8374
Term of patent 14 years
Int. Cl. D10—*02*
U.S. Cl. D10—39

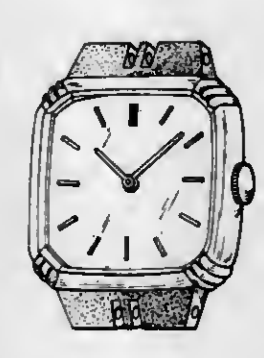

261,735
TRAFFIC RADAR UNIT
Edward W. Sergent, Chanute, Kans., assignor to M.P.H. Industries, Inc., Chanute, Kans.
Filed Aug. 13, 1979, Ser. No. 66,025
Term of patent 14 years
Int. Cl. D10—*05*
U.S. Cl. D10—46

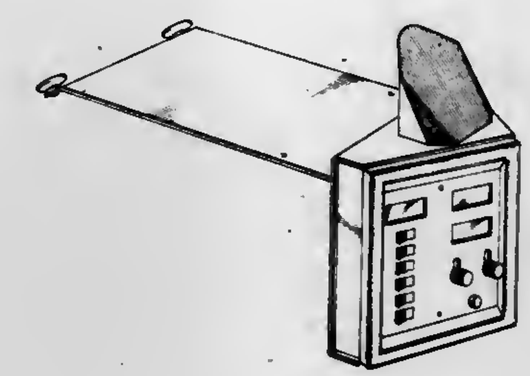

261,736
BIPOLAR TEMPERATURE INDICATOR
Scott P. Gosline, P.O. Box 41962, Atlanta, Ga. 30331, and William F. Stembridge, P.O. Box 90756, East Point, Ga. 30364
Filed Oct. 15, 1979, Ser. No. 85,063
Term of patent 14 years
Int. Cl. D10—*04*
U.S. Cl. D10—57

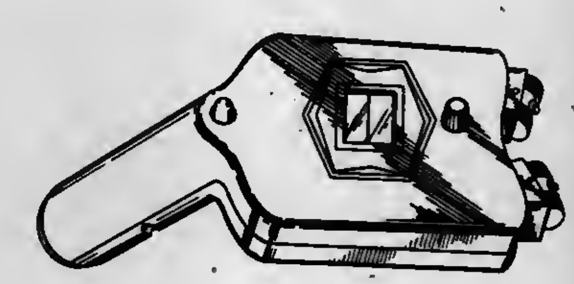

261,737
THERMOCHROMIC THERMOMETER
William T. Hultquist, Dayton, Ohio, assignor to American Thermometer Co., Inc., Dayton, Ohio
Filed Jan. 10, 1980, Ser. No. 110,906
Term of patent 14 years
Int. Cl. D10—*04*
U.S. Cl. D10—57

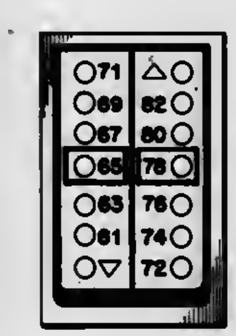

261,738
CAPACITIVE PICKUP CLIP OR SIMILAR ARTICLE
DeWayne J. Shumway, Fruita, Colo., assignor to Dixson, Inc., Grand Junction, Colo.
Filed Oct. 30, 1979, Ser. No. 89,376
Term of patent 14 years
Int. Cl. D10—*04*
U.S. Cl. D10—80

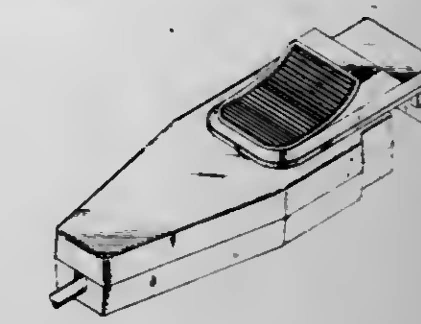

261,739
FLOW METER
Abraham Leibson, Buckingham, Pa., assignor to Emerson Electric Co., St. Louis, Mo.
Filed Oct. 29, 1979, Ser. No. 89,050
Term of patent 14 years
Int. Cl. D10—*04*
U.S. Cl. D10—96

261,740
INTRUDER DETECTOR HOUSING
David B. Lederer, Rochester, N.Y., assignor to Detection Systems, Inc., Fairport, N.Y.
Filed Nov. 5, 1979, Ser. No. 91,107
Term of patent 14 years
Int. Cl. D10—*05*
U.S. Cl. D10—106

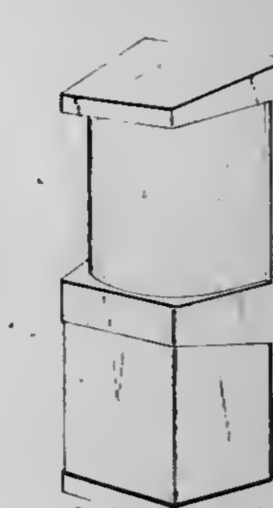

261,741
FINGER RING OR SIMILAR ARTICLE
Robert Sciotti, 31821 Wellston, Warren, Mich. 48093
Filed May 29, 1979, Ser. No. 43,380
Term of patent 14 years
Int. Cl. D11—*01*
U.S. Cl. D11—30

261,742
PENDANT
William J. McTighe, 220 E. 17th St., New York, N.Y. 10003, and Wolfgang Schaer, 34 Riverview Dr., Upper Montclair, N.J. 07043
Filed Dec. 10, 1979, Ser. No. 101,962
Term of patent 14 years
Int. Cl. D11—*01*
U.S. Cl. D11—56

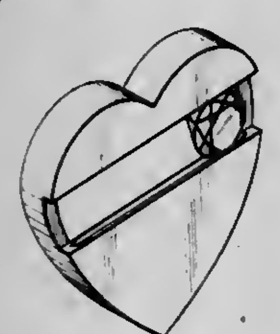

261,743
JEWELRY CLIP OR THE LIKE
Paul V. Little, 270 Feller Dr., Central Islip, N.Y. 11722
Filed Feb. 14, 1978, Ser. No. 877,794
Term of patent 14 years
Int. Cl. D11—*01*
U.S. Cl. D11—87

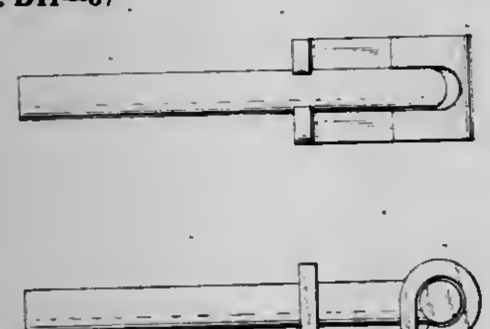

261,744
PLANT SUPPORT
William M. Boyajian, 269 Huron Ave., Cambridge, Mass. 02138
Continuation-in-part of Ser. No. 809,283, Jun. 23, 1977, Pat. No. Des. 251,524. This application Jul. 17, 1978, Ser. No. 925,446
The portion of the term of this patent subsequent to Apr. 10, 1993, has been disclaimed.
Term of patent 14 years
Int. Cl. D6—*04*
U.S. Cl. D6—135

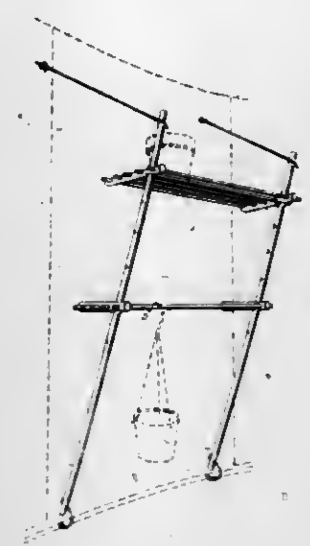

261,745
PLAQUE
William H. Rymes, Ossipee Mountain Rd., Center Ossipee, N.H. 03814
Filed Oct. 5, 1979, Ser. No. 82,384
Term of patent 14 years
Int. Cl. D11—*02*
U.S. Cl. D11—136

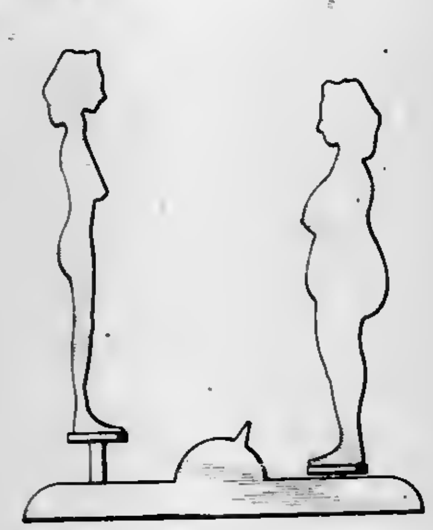

261,746
BUD VASE
Arthur L. Harshman, Dunkirk, Ind., and Martin J. Waterfield, Birmingham, Mich., assignors to Florists' Transworld Delivery Association, Southfield, Mich.
Filed Jul. 11, 1979, Ser. No. 56,451
Term of patent 14 years
Int. Cl. D11—*02*
U.S. Cl. D11—146

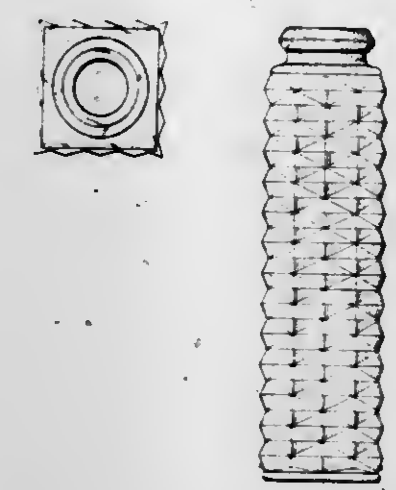

261,747
FIGURINE OF A COLLIE
Jesus A. Carbajales Santa Eulalia, and Javier B. Carbajales Santa Eulalia, both of Montevideo, Uruguay, assignors to John J. Madison Company, Inc., Laguna Hills, Calif.
Filed Mar. 9, 1979, Ser. No. 19,228
Term of patent 14 years
Int. Cl. D11—*02*
U.S. Cl. D11—158

261,748
SNOW PUSH CART
Thomas R. Mayer, and Gloria G. Mayer, both of 14024 Royal Ct., Minnetonka, Minn. 55343
Filed Sep. 5, 1979, Ser. No. 72,361
Term of patent 14 years
Int. Cl. D12—*14*
U.S. Cl. D12—11

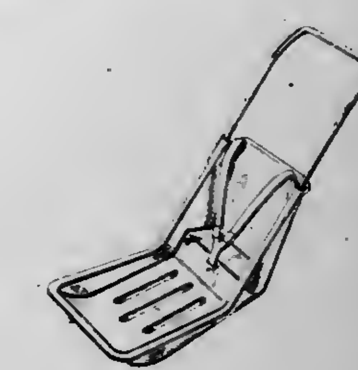

261,749
GOLF CLUB BAG CARRIER
Auborn R. Hampton, 1307 Garth Ave., SW., Decatur, Ala. 35601
Filed Oct. 17, 1979, Ser. No. 85,495
Term of patent 14 years
Int. Cl. D12—*02*
U.S. Cl. D34—15

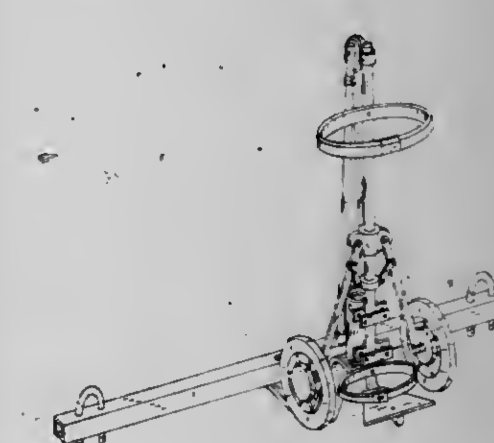

261,750
FOUR WHEEL TANDEM TROLLEY
John F. Miller, P.O. Box 277, Howell, Mich. 48843
Filed Mar. 15, 1979, Ser. No. 20,663
Term of patent 14 years
Int. Cl. D12—*05*
U.S. Cl. D34—35

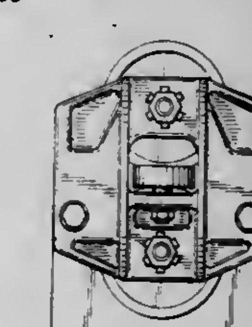

261,751
AUTOMOBILE
John T. Orsini, 10950 Ohio Ave., Los Angeles, Calif. 90024
Filed Dec. 8, 1978, Ser. No. 967,888
Term of patent 14 years
Int. Cl. D12—*08*
U.S. Cl. D12—92

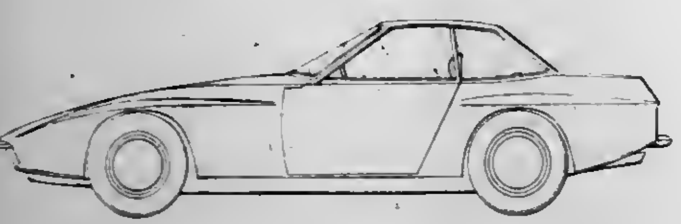

261,752
MOTORCYCLE INSTRUMENT CLUSTER
Masato Iwakura, Wako, Japan, assignor to Honda Giken Kogyo Kabushiki Kaisha, Wako, Japan
Filed Jun. 26, 1979, Ser. No. 52,226
Claims priority, application Japan, Apr. 13, 1979, 54-14635
Term of patent 14 years
Int. Cl. D12—*16;* D10—*04*
U.S. Cl. D12—114

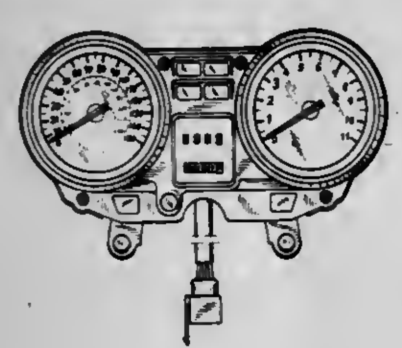

261,753
PNEUMATIC TIRE TREAD AND BUTTRESS
Arthur C. Blankenship, Howell, and Marco Maxemovich, Madison Heights, both of Mich., assignors to Uniroyal, Inc., New York, N.Y.
Filed Sep. 25, 1978, Ser. No. 945,351
Term of patent 14 years
Int. Cl. D12—*15*
U.S. Cl. D12—147

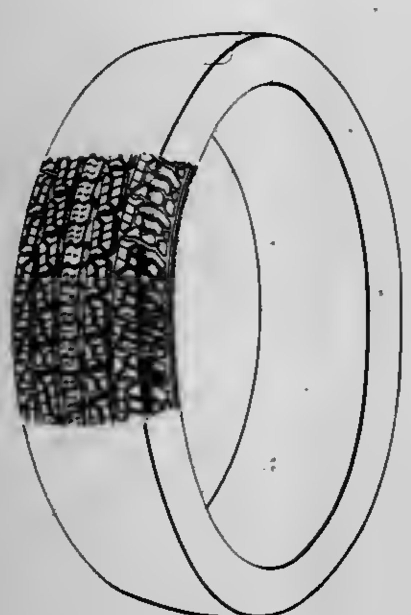

261,754
REAR VIEW MIRROR
Alberto Vitaloni, Turin, Italy, assignor to Vitaloni S.p.A., Beinasco, Italy
Filed Feb. 27, 1979, Ser. No. 15,690
Claims priority, application Italy, Sep. 28, 1978, 53735/78
Term of patent 14 years
Int. Cl. D12—*16*
U.S. Cl. D12—187

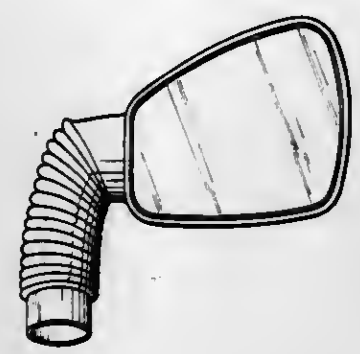

261,755
VEHICLE WHEEL
Colin H. Hyams, Londoo, England, assignor to Roco Wheels Limited, London, England
Filed Nov. 7, 1978, Ser. No. 958,419
Term of patent 14 years
Int. Cl. D12—*16*
U.S. Cl. D12—205

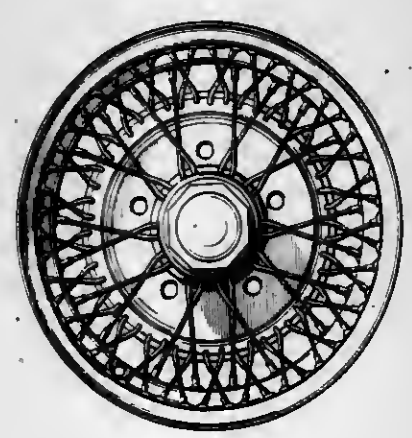

261,756
STRAIN INSULATOR WITH WATERSHEDS
Richard N. Essig, Jackson, Mich., assignor to Plastigage Corporation, Jackson, Mich.
Filed Feb. 1, 1979, Ser. No. 8,748
Term of patent 14 years
Int. Cl. D13—*03*
U.S. Cl. D13—18

261,757
PORTABLE JACK PLUG SOCKET CONNECTOR FOR VEHICLES
Robert J. Wunderlich, Dallas, Tex., assignor to Autotronics, Inc., West Richardson, Tex.
Filed Mar. 8, 1979, Ser. No. 18,609
Term of patent 14 years
Int. Cl. D13—*03*
U.S. Cl. D13—30

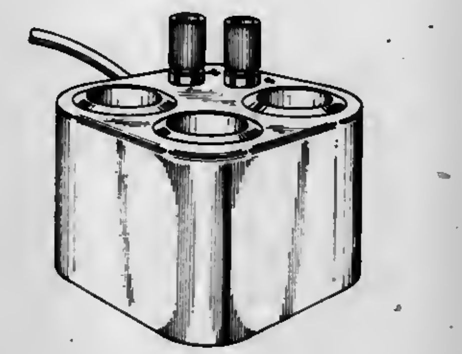

261,758
CONTROL UNIT FOR A COMBINED AUTOMOBILE CASSETTE PLAYER, RADIO AND DIGITAL CLOCK
John F. Castagna, Brooklyn, and Ronald A. Emmerling, New City, both of N.Y., assignors to Sparkomatic Corporation, Milford, Pa.
Filed Oct. 15, 1979, Ser. No. 85,034
Term of patent 14 years
Int. Cl. D14—*01, 03*
U.S. Cl. D14—10

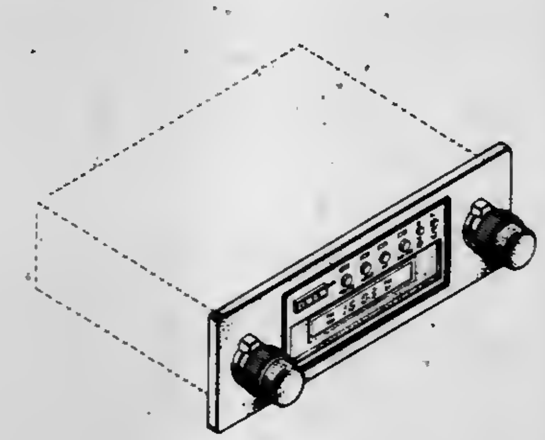

261,759
LOUDSPEAKER
Kazuyuki Hata, Tokyo, Japan, assignor to Pioneer Kabushiki Kaisha, Tokyo, Japan
Filed Mar. 12, 1979, Ser. No. 19,345
Claims priority, application Japan, Sep. 11, 1978, 53-38657
Term of patent 14 years
Int. Cl. 14—*01*
U.S. Cl. D14—30

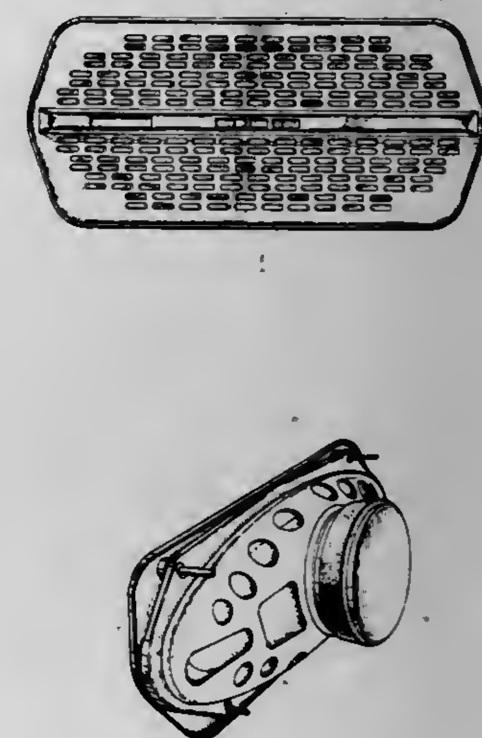

261,760
ELECTRONIC POSTAL RATE MEMORY
Daniel F. Dingos, Huntington, Conn., assignor to Pitney Bowes Inc., Stamford, Conn.
Filed Dec. 22, 1978, Ser. No. 972,583
Term of patent 14 years
Int. Cl. D14—*02;* D13—*99*
U.S. Cl. D14—114

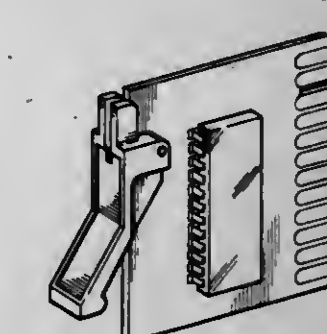

261,761
DATA TERMINAL/ACOUSTIC COUPLER
Jack F. Jagber, San Diego, and Richard Hutting, Pasadena, both of Calif., assignors to Systems Consultants, Inc., Washington, D.C.
Filed Feb. 22, 1979, Ser. No. 14,183
Term of patent 14 years
Int. Cl. D14—*02; 03*
U.S. Cl. D14—101

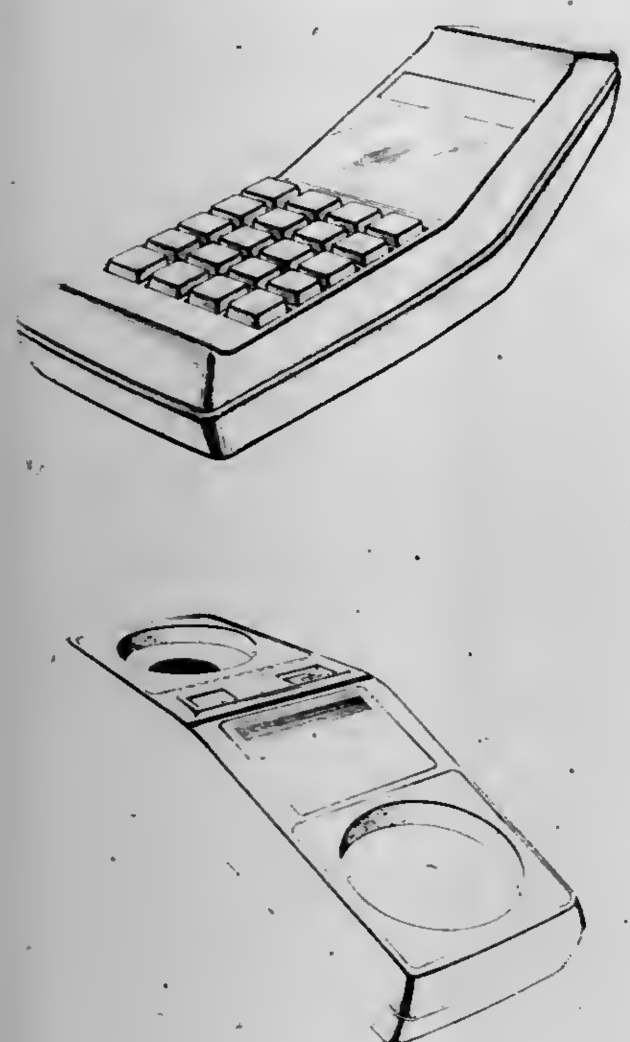

261,762
COMPUTER TERMINAL
David S. Urhanus, South Easton, Mass., and Robert L. Hanson, Nashua, N.H., assignors to Digital Equipment Corporation, Maynard, Mass.
Filed Mar. 12, 1979, Ser. No. 19,383
Term of patent 14 years
Int. Cl. D14—*02*
U.S. Cl. D14—100

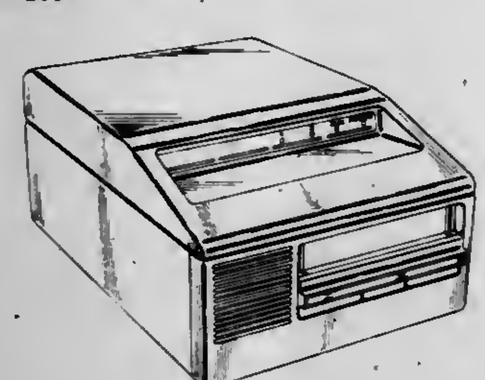

261,763
TELEPHONE
Wesley L. Thomas, 109 S. Catalina St., Los Angeles, Calif. 90004
Filed May 29, 1979, Ser. No. 43,430
Term of patent 14 years
Int. Cl. 14—*03*
U.S. Cl. D14—53

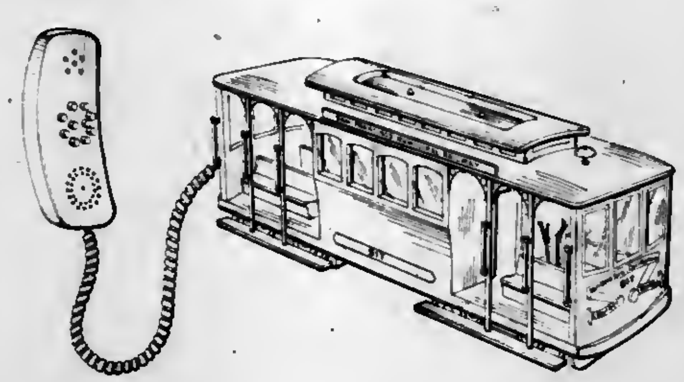

261,764
HAND HELD TRANSCEIVER OR SIMILAR ARTICLE
Paul J. Klucznik, Manlius, and Andrew Kaloass, Syracuse, both of N.Y., assignors to General Electric Company, New York, N.Y.
Filed Sep. 13, 1979, Ser. No. 75,502
Term of patent 14 years
Int. Cl. 14—*03*
U.S. Cl. D14—68

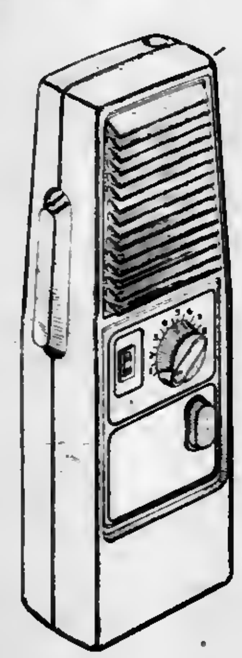

261,765
DIGITAL CLOCK RADIO
Benito Mishiro, Sakai, and Takao Okada, Kyoto, both of Japan, assignors to Matsushita Electric Industrial Co., Ltd., Kadoma, Japan
Filed Jun. 15, 1978, Ser. No. 915,851
Claims priority, application Japan, Dec. 16, 1977, 52-49811
Term of patent 14 years
Int. Cl. D14—*03*
U.S. Cl. D14—73

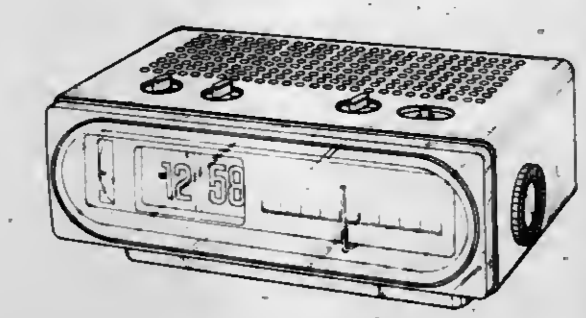

261,766
DIGITAL CLOCK RADIO
Setsuo Miyanaga, Neyagawa, and Katsutoshi Kido, Kyoto, both of Japan, assignors to Matsushita Electric Industrial Co., Ltd., Kadoma, Japan
Filed Jun. 9, 1980, Ser. No. 157,729
Claims priority, application Japan, Dec. 20, 1979, 54-53705
Term of patent 14 years
Int. Cl. D14—*03*; D10—*01*
U.S. Cl. D14—73

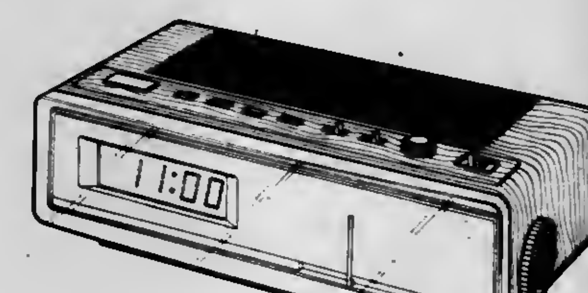

261,767
TELEVISION RECEIVER
Tetsuro Takimoto, Fujisawa; Motoya Mohri, Yokohama; Kiyoshi Wada, Ichikawa; Rikio Uchiyama; Koichi Nishigaki, both of Yokohama, and Toshie Aoki, Kawasaki, all of Japan, assignors to Victor Company of Japan, Limited, Yokohama, Japan
Filed Jan. 8, 1980, Ser. No. 110,502
Claims priority, application Japan, Jul. 20, 1979, 54-30276
Term of patent 14 years
Int. Cl. D14—*03*
U.S. Cl. D14—81

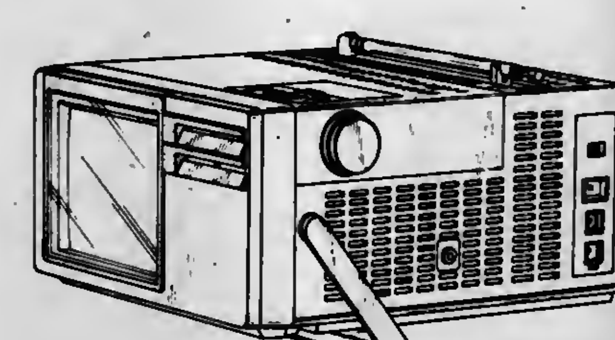

261,768
ANTENNA BASE
David F. Metz, Wentworth Cove Rd., Laconia, N.H. 03246
Filed Jul. 30, 1979, Ser. No. 62,017
Term of patent 14 years
Int. Cl. D14—*03*
U.S. Cl. D14—91

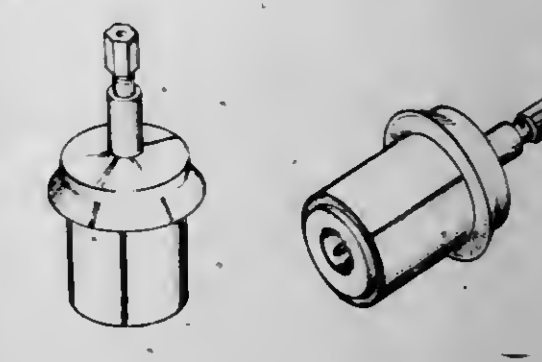

261,769
COVER FOR COLOR CONTAINER IN A TINTING MACHINE
Aslak R. Heikel; Heikki Kokki, both of Tampere, and Veikko Pättiniemi, Pirkkala, all of Finland, assignors to Winter OY, Tampere, Finland
Filed May 15, 1979, Ser. No. 39,217
Claims priority, application Finland, Nov. 16, 1978, 714/78
Term of patent 14 years
Int. Cl. D15—*99*
U.S. Cl. D15—147

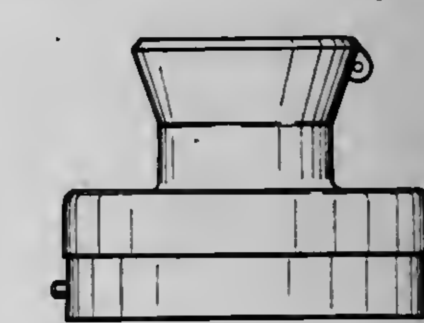

261,770
ELECTROSTATIC COPIER
Koji Hikawa, Tokyo, Japan, assignor to Ricoh Company, Ltd., Japan
Filed Nov. 15, 1979, Ser. No. 94,860
Claims priority, application Japan, May 17, 1979, 54-20129
Term of patent 7 years
Int. Cl. D16—*03*
U.S. Cl. D16—31

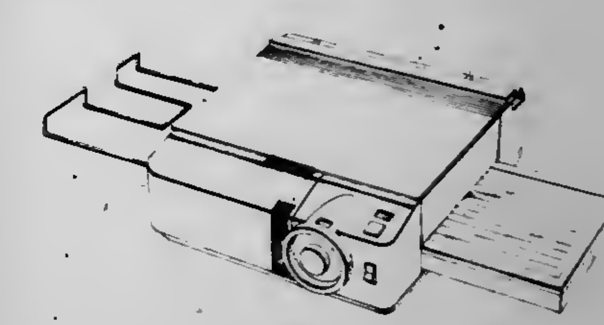

261,771
EYE GLASS FRAME
Howell S. Jobbins, Jr., Warwick, R.I., assignor to Universal Optical Company, Inc., East Providence, R.I.
Filed Nov. 13, 1979, Ser. No. 93,122
Term of patent 14 years
Int. Cl. D16—*06*
U.S. Cl. D16—116

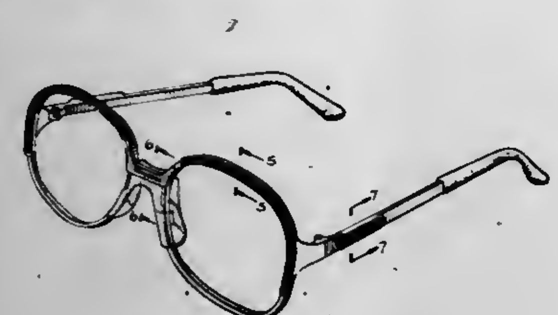

261,772
FILLING STATION TERMINAL
Masaji Sawada, and Tsutomu Yamasaki, both of Osaka, Japan, assignors to Sharp Corporation, Osaka, Japan
Filed Jun. 6, 1980, Ser. No. 157,033
Term of patent 14 years
Int. Cl. D18—*01*
U.S. Cl. D18—4

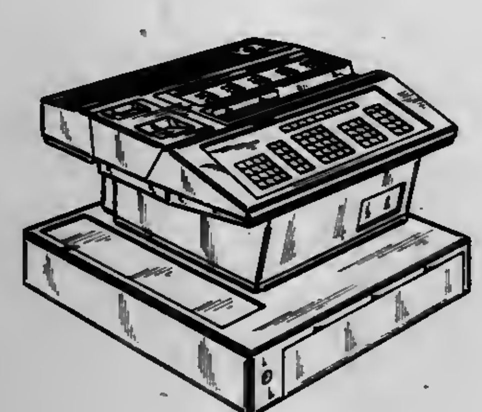

261,773
DESIGN FOR A HANDHELD CALCULATOR
Shinpei Ichikawa, Lubbock, and William J. Lawrence, Dallas, both of Tex., assignors to Texas Instruments Incorporated, Dallas, Tex.
Filed Mar. 15, 1979, Ser. No. 20,558
Term of patent 14 years
Int. Cl. D18—*01*
U.S. Cl. D18—7

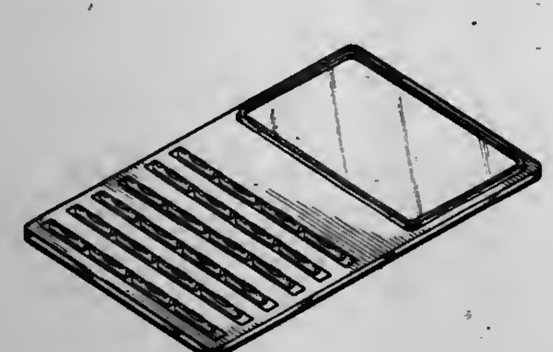

261,774
TYPE FONT FOR VEHICULAR LICENSE PLATE
Werner Templin, Bischweiler, Fed. Rep. of Germany, assignor to Dambach Templin GmbH, Geggenau, Fed. Rep. of Germany
Filed Oct. 10, 1978, Ser. No. 949,541
Claims priority, application Fed. Rep. of Germany, Apr. 11, 1978, MR3/135; Sep. 16, 1978, MR3/138
Term of patent 14 years
Int. Cl. D18—*03*
U.S. Cl. D18—24

ABCDDEFG
HIJKLMNO
PPQRSTÜV
WXYZÄÖ
12345678
90-

ABCDEFG
HIJKLMN
OPQRSTU
VWXYZ-Ä
ÖÜ12345
67890

261,775
LIGHTER CLIP
Eugene E. Valigura, P.O. Box 1221, El Campo, Tex. 77437
Filed Jul. 11, 1979, Ser. No. 56,771
Term of patent 14 years
Int. Cl. D19—*06*
U.S. Cl. D19—56

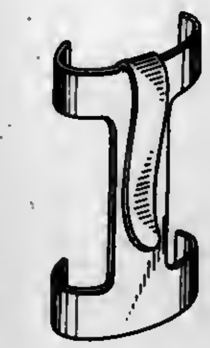

261,776
ELECTRONIC TEACHING UNIT
David W. Wendt, Madison, Wis., assignor to Enrichment Reading Corporation of America, Iron Ridge, Wis.
Filed Jun. 15, 1979, Ser. No. 48,727
Term of patent 14 years
Int. Cl. D19—*08*
U.S. Cl. D19—60

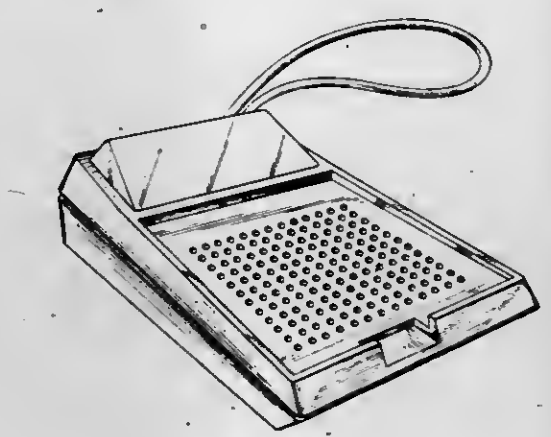

261,777
MIXING VALVE INDEXED DECAL
Thomas J. Eaves, 39 Fairview, Glen Rock, N.J. 07452
Filed Jul. 13, 1978, Ser. No. 924,330
Term of patent 14 years
Int. Cl. D20—*03*
U.S. Cl. D20—11

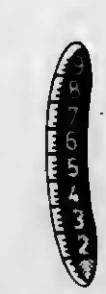

261,778
LABEL
Gerhard Wippern, Hirschhorn, Fed. Rep. of Germany, assignor to Esselte Meto International GmbH, Fed. Rep. of Germany
Filed Mar. 14, 1979, Ser. No. 20,420
Term of patent 14 years
Int. Cl. D20—*99*
U.S. Cl. D20—27

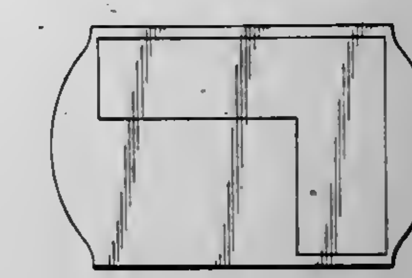

261,779
HOCKEY GAME DISPLAY AND CONTROL PANEL OR SIMILAR ARTICLE
Robert B. Lovejoy, Torrance, Calif., assignor to Mattel, Inc., Hawthorne, Calif.
Filed Oct. 16, 1978, Ser. No. 951,898
Term of patent 14 years
Int. Cl. D21—*01*
U.S. Cl. D21—13

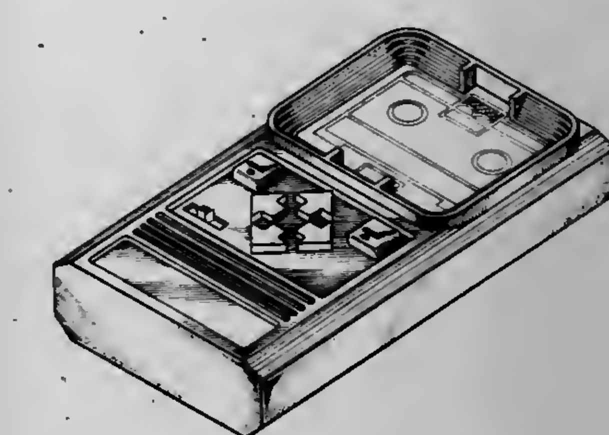

261,780
ELECTRONIC GAME HOUSING
Lee Radtke, Lake Zurich, Ill., assignor to Tiger Electronic Toys, Inc., Mundelein, Ill.
Filed Jan. 21, 1980, Ser. No. 113,713
Term of patent 14 years
Int. Cl. D21—*01*
U.S. Cl. D21—13

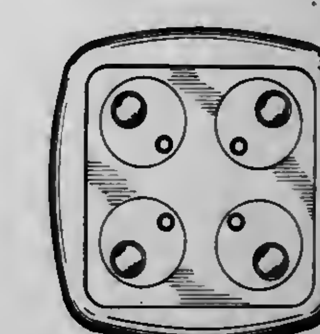

261,781
GAME BOARD
Raymond O. Keltner, 4131 W. 99th St., Overland Park, Kans. 66207
Filed Oct. 22, 1979, Ser. No. 86,758
Term of patent 14 years
Int. Cl. D21—*01*
U.S. Cl. D21—23

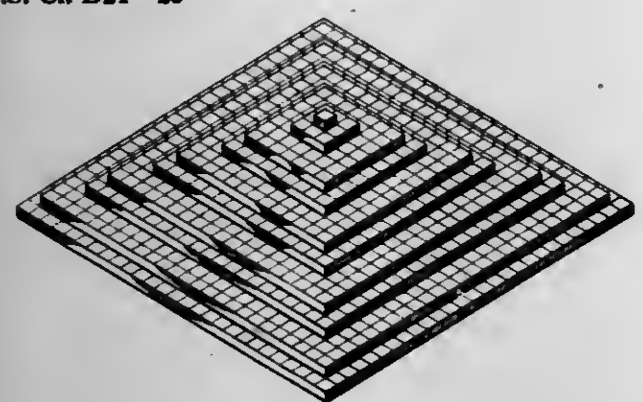

261,782
GAMING MACHINE
James H. Muir, Indialantic, Fla., assignor to Video Turf Incorporated, New York, N.Y.
Filed Dec. 12, 1979, Ser. No. 103,067
Term of patent 14 years
Int. Cl. D21—*01*
U.S. Cl. D21—37

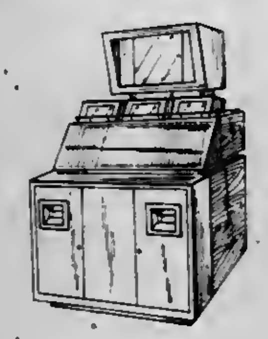

261,783
MUSICAL TOY
Shinroku Nakao, Yokohama; Yoshiyasu Ishii, and Susumu Matsumoto, both of Tokyo, all of Japan, assignors to Combi Co., Ltd., Tokyo, Japan
Filed May 31, 1979, Ser. No. 44,139
Claims priority, application Japan, Dec. 8, 1978, 53-52085
Term of patent 14 years
Int. Cl. D21—*01*
U.S. Cl. D21—63

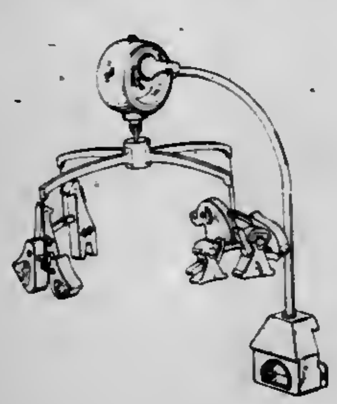

261,784
RIDING TOY
Robert C. Fisher, East Aurora, N.Y., assignor to The Quaker Oats Company, Chicago, Ill.
Filed Jan. 11, 1980, Ser. No. 111,222
Term of patent 14 years
Int. Cl. D21—*01*
U.S. Cl. D21—78

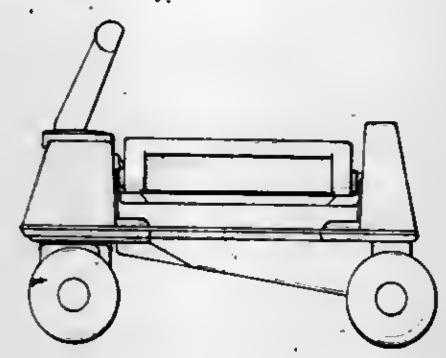

261,785
TOY BLOCK
Shinroku Nakao, Yokohama; Yoshiyasu Ishii, and Kenshun Ishii, both of Tokyo, all of Japan, assignors to Combi Co., Ltd., Tokyo, Japan
Filed Jul. 25, 1979, Ser. No. 60,314
Term of patent 14 years
Int. Cl. D21—*01*
U.S. Cl. D21—108

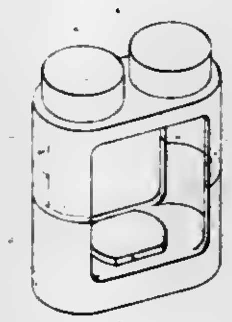

261,786
SIMULATIVE TOY PROJECTOR
Alan M. Steinberg, Spring Valley, N.Y., assignor to Gordy International Incorporated, New York, N.Y.
Filed Jul. 5, 1979, Ser. No. 54,671
Term of patent 14 years
Int. Cl. D21—*01*
U.S. Cl. D10—110

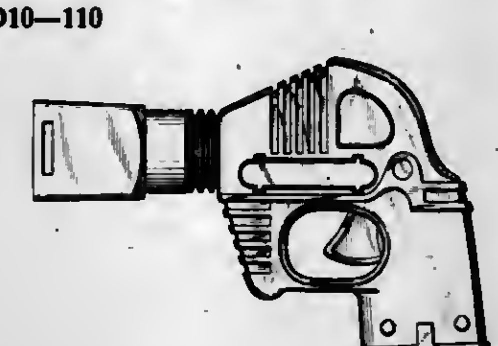

261,787
TOY BULLDOZER
Jack L. Breneman, Orchard Park, N.Y., assignor to The Quaker Oats Company, Chicago, Ill.
Filed Jan. 11, 1980, Ser. No. 111,361
Term of patent 14 years
Int. Cl. D21—*01*
U.S. Cl. D21—132

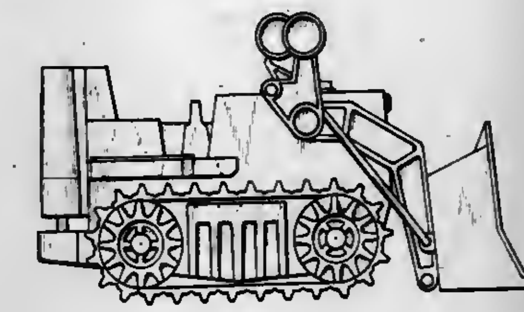

261,788
FRAME FOR BARBELL OR THE LIKE
Harry Burns, The Blacksmith's Arms, Thornwood, Epping, Essex, England
Filed Mar. 2, 1979, Ser. No. 17,075
Claims priority, application United Kingdom, Sep. 8, 1978, 986273/78
Term of patent 14 years
Int. Cl. D21—*02*
U.S. Cl. D21—197

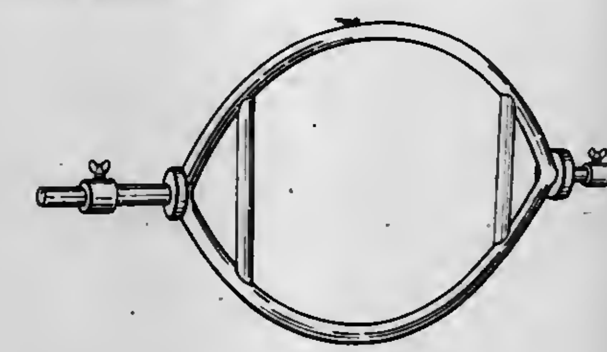

261,789
FOOTBALL KICKING TEE
George C. Allen, 9811 Presidential Dr., Allison Park, Pa. 15101
Filed Jan. 9, 1980, Ser. No. 110,789
Term of patent 14 years
Int. Cl. D21—*02*
U.S. Cl. D21—209

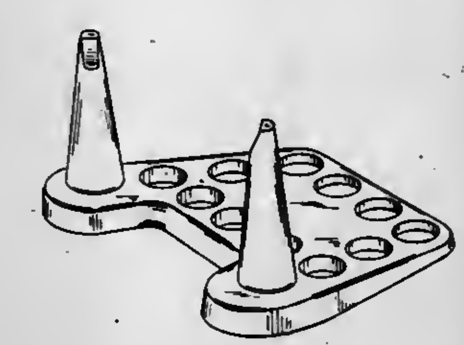

261,790
SKI
Anton Arnsteiner, Mittersill, Austria, assignor to Blizzard Gesellschaft m.b.H., Mittersill, Austria
Filed Nov. 7, 1979, Ser. No. 91,953
Claims priority, application Austria, May 8, 1979, 14292/79
Term of patent 14 years
Int. Cl. D21—*02*
U.S. Cl. D21—229

261,791
INDOOR/OUTDOOR GOLF PRACTICE TARGET
James Todd, 24 Casey La., East Northport, N.Y. 11731
Filed Nov. 28, 1979, Ser. No. 84,680
Term of patent 14 years
Int. Cl. D21—*02*
U.S. Cl. D21—234

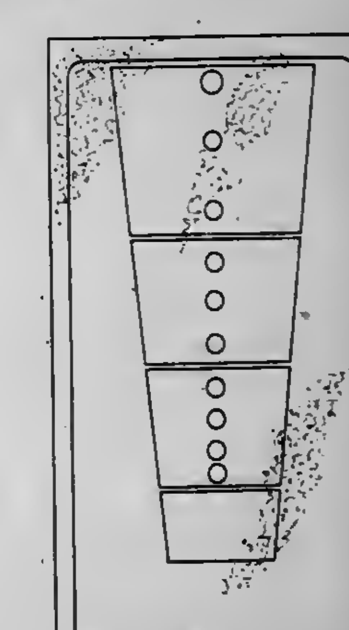

261,792
PLAYGROUND TEETER-TOTTER
Donald S. Ament, Encino, and Duane S. Ament, Hollywood, both of Calif., assignors to Miracle Recreation Equipment Company, Grinnell, Iowa
Filed Sep. 20, 1979, Ser. No. 77,366
Term of patent 14 years
Int. Cl. D21—*03*
U.S. Cl. D21—251

261,793
TENT
Robert W. Ferguson, 1521 Granger, Ann Arbor, Mich. 48104
Filed Nov. 5, 1979, Ser. No. 91,264
Term of patent 14 years
Int. Cl. D21—*02*
U.S. Cl. D21—253

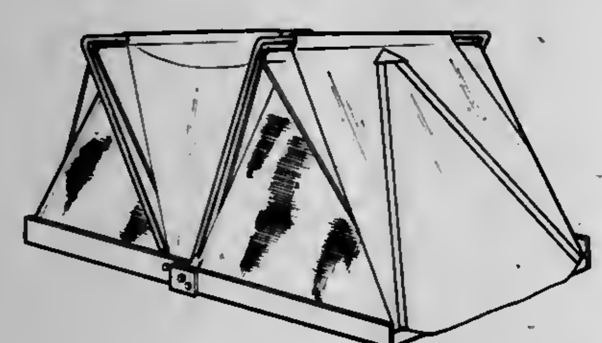

261,794
RIFLE PEDESTAL FOR SHOOTING RANGES AND THE LIKE
Daniel L. Bechtel, 4701 Inwood Rd., Fort Worth, Tex. 76109
Filed Nov. 13, 1979, Ser. No. 94,043
Term of patent 14 years
Int. Cl. D22—*01*
U.S. Cl. D22—7

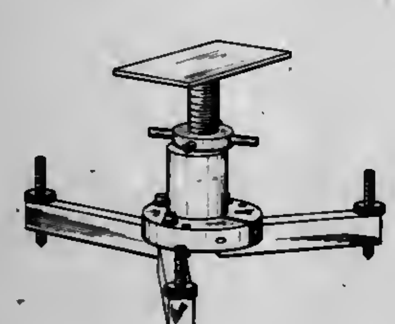

261,795
ACCESSORY FOR A BELT
George E. Julsen, 10 North St., Whitefield, N.H. 03598
Filed Jun. 1, 1979, Ser. No. 44,529
Term of patent 14 years
Int. Cl. D22—*99*
U.S. Cl. D22—14

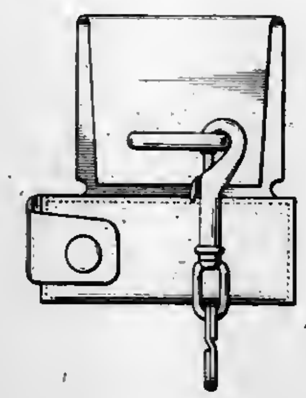

261,796
ENCLOSURE FOR A SIT DOWN SHOWER BATH
Carl J. Queen, 1041 Bimini La., Riviera Beach, Fla. 33404
Filed Mar. 14, 1979, Ser. No. 20,523
Term of patent 14 years
Int. Cl. D23—*04*
U.S. Cl. D23—48

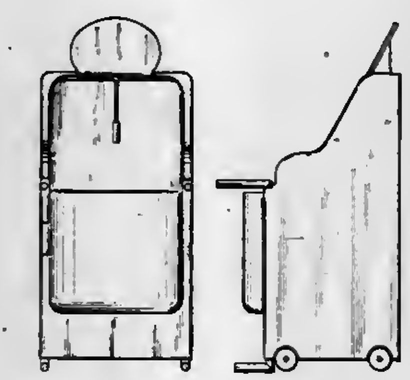

261,797
BIDET OR SIMILAR ARTICLE
Jack N. Kaiser, Danville, Ky., assignor to American Standard Inc., New York, N.Y.
Filed Jul. 21, 1980, Ser. No. 170,400
Term of patent 14 years
Int. Cl. D23—*02*
U.S. Cl. D23—51

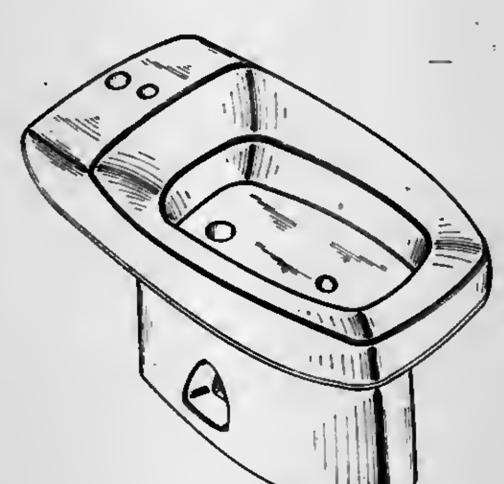

261,798
LAVATORY OR SIMILAR ARTICLE
Henry M. Stairs, Jr., Neshanic, N.J., assignor to American Standard Inc., New York, N.Y.
Filed Jul. 31, 1979, Ser. No. 62,854
Term of patent 14 years
Int. Cl. D23—*02*
U.S. Cl. D23—58

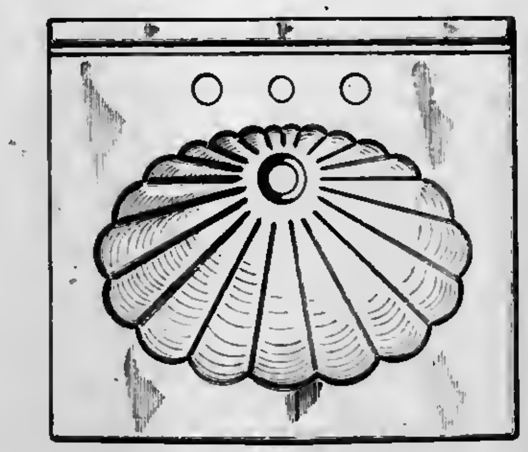

261,799
WATER CLOSET
Andrew L. Alger, 230 Maple Ave., Wilmette, Ill. 60091
Filed Jul. 24, 1979, Ser. No. 60,210
Term of patent 14 years
Int. Cl. D23—*02*
U.S. Cl. D23—65

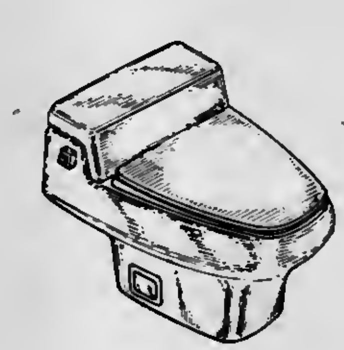

261,800
COMBINED TOILET SEAT AND COVER
Didier Deconinck, Seyssins, France, assignor to Allibert Exploitation Societe Anonyme, Grenoble, France
Filed Dec. 31, 1979, Ser. No. 108,696
Claims priority, application France, Jun. 29, 1979, 79 2530
Term of patent 14 years
Int. Cl. D23—*02*
U.S. Cl. D23—71

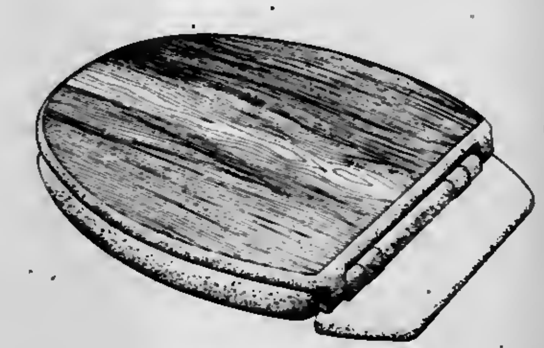

261,801
PATHOLOGICAL WASTE INCINERATOR WITH COUNTERBALANCED ACCESS DOOR AND LOWER STACK SECTION
William H. Johnson, Harrisonburg, Va., assignor to Shenandoah Manufacturing Co., Inc., Harrisonburg, Va.
Filed Oct. 2, 1979, Ser. No. 81,261
Term of patent 14 years
Int. Cl. D23—*99*
U.S. Cl. D23—85

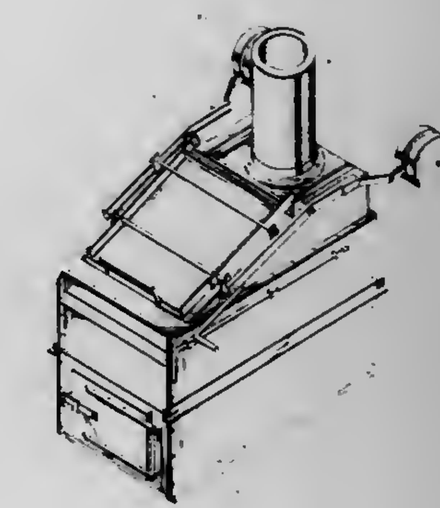

261,802
TIERED CIRCULAR FLUID TREATMENT MODULE
Charles L. Meurer, 5937 E. Weaver Cir., Englewood, Colo. 80111
Filed Apr. 9, 1979, Ser. No. 28,512
Term of patent 14 years
Int. Cl. D24—*99*; D23—*01*
U.S. Cl. D24—99

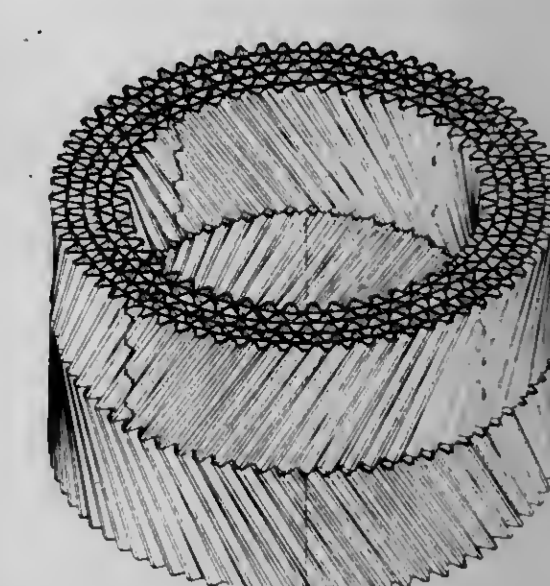

261,803
HOUSING FOR A VENTILATING FAN
Hoy R. Bohanon, Jr., Muskogee, Okla., assignor to Acme Engineering & Manufacturing Corporation, Muskogee, Okla.
Filed Nov. 29, 1978, Ser. No. 964,516
Term of patent 14 years
Int. Cl. D23—*04*
U.S. Cl. D23—163

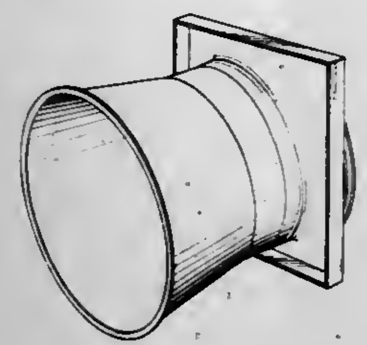

261,804
COLUMNAR PATIENT CARE SERVICE FACILITY
Leslie D. Foster, Brookville, Ind.; Dennis J. Gallant, Cincinnati, Ohio; William D. Drew, Batesville, and Cecil R. Lohrey, Brookville, both of Ind., assignors to Hill-Rom Company, Inc., Batesville, Ind.
Filed Jan. 17, 1979, Ser. No. 4,211
Term of patent 14 years
Int. Cl. D24—*01*
U.S. Cl. D24—1.1

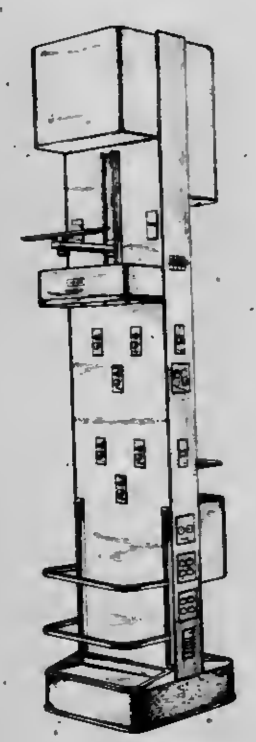

261,805
ARTICULATOR FOR ARTIFICIAL DENTURES
Svante R. Edwardson, Solna, Sweden, assignor to AB Dentatus, Hogersten, Sweden
Filed Jun. 15, 1979, Ser. No. 48,887
Term of patent 14 years
Int. Cl. D24—*02*
U.S. Cl. D24—10

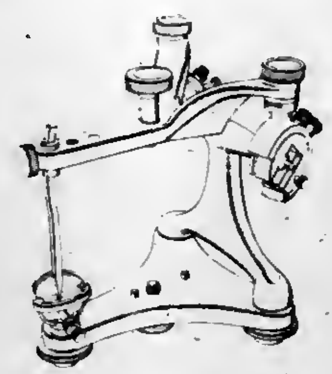

261,806
CHARCOAL TEST TRAY CANISTER
Daniel D. Whitney, Orangevale, Calif., assignor to Sacramento Municipal Utility District, Sacramento, Calif.
Filed Aug. 13, 1979, Ser. No. 66,488
Term of patent 14 years
Int. Cl. D24—*99*
U.S. Cl. D24—17

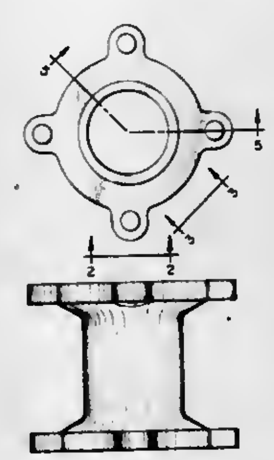

261,807
CELL SCRAPING DEVICE
Roy W. Grabner, Blue Bell; William J. McAleer, Ambler, both of Pa., and Edward L. Paul, Chatham Township, Morris County, N.J., assignors to Merck & Co., Inc., Rahway, N.J.
Filed May 7, 1979, Ser. No. 36,277
Term of patent 14 years
Int. Cl. D24—*02*
U.S. Cl. D24—28

261,808
PROPHYLACTIC DEVICE
Tadao Okamoto, 12-8, 1-chome, Kohinata, Bunkyo-ku, Tokyo, Japan
Contination-in-part of Ser. No. 943,122, Sep. 18, 1978, Des. Pat. No. 253,009. This application May 17, 1979, Ser. No. 39,818
Term of patent 14 years
Int. Cl. D24—*04, 99*
U.S. Cl. D24—99

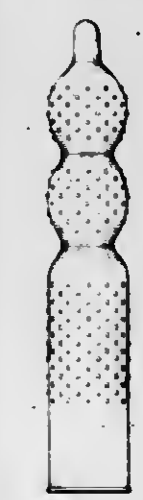

261,809
ASPHALT PLANT CONTROL HOUSE
Richard F. Chambers, 8431 Dayton Pike, Daisy, Tenn. 37319
Filed May 2, 1980, Ser. No. 145,995
Term of patent 14 years
Int. Cl. D25—*03*
U.S. Cl. D25—22

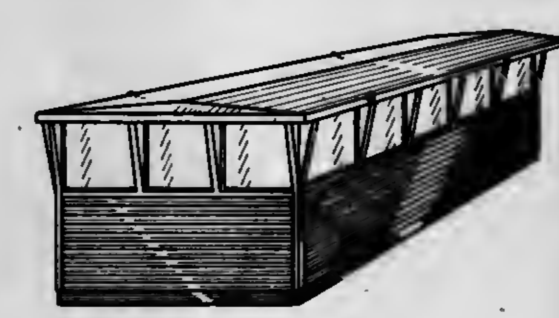

261,810
KIOSK
R. Michel Perlmutter, Aurora, Colo., assignor to Grove Foods, Inc., Aurora, Colo.
Filed Mar. 29, 1979, Ser. No. 24,906
Term of patent 14 years
Int. Cl. D25—*03*
U.S. Cl. D25—26

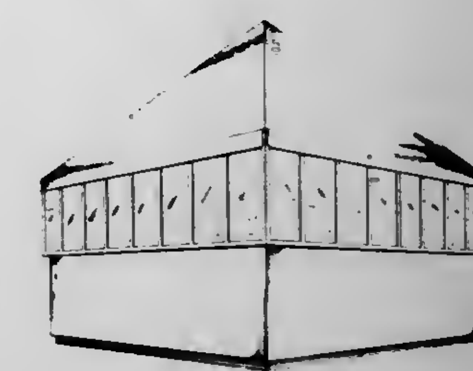

261,811
LINEAR MULTILAMP PHOTOFLASH UNIT
Emery G. Audesse, Beverly, Mass., and Donald W. Hartman, Williamsport, Pa., assignors to GTE Products Corporation, Stamford, Conn.
Filed Sep. 4, 1979, Ser. No. 72,528
Term of patent 14 years
Int. Cl. D16—*05*
U.S. Cl. D26—02

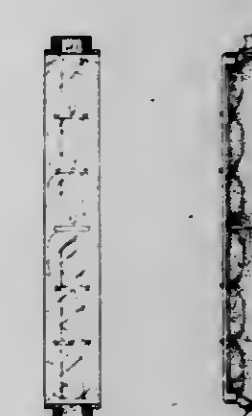

261,812
LAMP
Thurman A. Bowles, New Smyrna Beach, Fla., and Jon M. Newgard, Louisville, Ky., assignors to General Electric Company, Schenectady, N.Y.
Filed Oct. 5, 1979, Ser. No. 82,093
Term of patent 14 years
Int. Cl. D26—*04*
U.S. Cl. D26—2

261,813
PIPE
S. Franklin Sher, 609 Lochmoor, Danville, Calif. 94526
Filed Jun. 2, 1980, Ser. No. 156,314
Term of pateot 14 years
Int. Cl. D27—*02*
U.S. Cl. D27—03

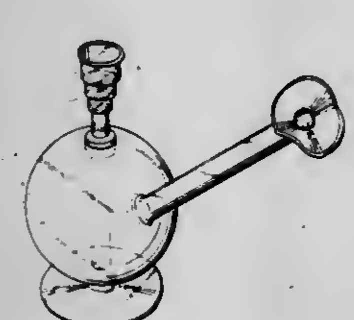

261,814
CIGARETTE LIGHTER
Pierre Spreter, Geneva, Switzerland, assignor to Christian Dior, S.A., Paris, France
Filed Nov. 29, 1976, Ser. No. 745,852
Claims priority, application United Kingdom, Jun. 17, 1976, 976155/76; France, Jun. 30, 1976, 76 74911; Italy, Jul. 2, 1976, 35882/76[U]; Int'l. Pat. Inst., Jul. 7, 1976, 63387; Japan, Jul. 28, 1976, 51-29225
Term of patent 14 years
Int. Cl. D27—*05*
U.S. Cl. D27—36

261,815
TAIL END COMB
Joseph W. Hustler, 194 Erie Ave., Brantford, Ontario, Canada (N3S 2G7)
Filed Dec. 10, 1979, Ser. No. 102,039
Claims priority, application Canada, Jun. 8, 1979, 08-06-79-1
Term of patent 14 years
Int. Cl. D28—*03*
U.S. Cl. D28—30

261,816
EYELASH CURLER
Joho deHaseth, Whittier, Calif., assignor to Joneé, Inc., Santa Fe Spriogs, Calif.
Filed Jul. 23, 1979, Ser. No. 59,602
Term of pateot 14 years
Int. Cl. D28—*03*
U.S. Cl. D28—36

261,817
MAKE-UP MIRROR
Horst J. Kretschmer, New York, N.Y., assignor to Clairol Incorporated, New York, N.Y.
Filed Jul. 12, 1978, Ser. No. 923,889
Term of patent 14 years
Int. Cl. D28—*02*
U.S. Cl. D28—67

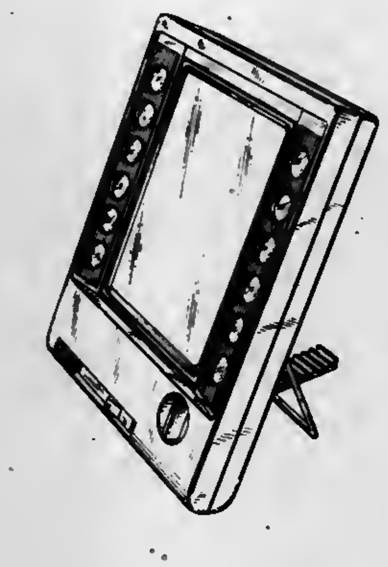

261,818
HOLDER FOR HAIR DRYER BLOWERS
James Galuppo, Etna Tool & Die Corporation, 50 Bond St., New York, N.Y. 10012
Filed Dec. 22, 1978, Ser. No. 972,415
Term of patent 14 years
Int. Cl. D28—*03*
U.S. Cl. D28—73

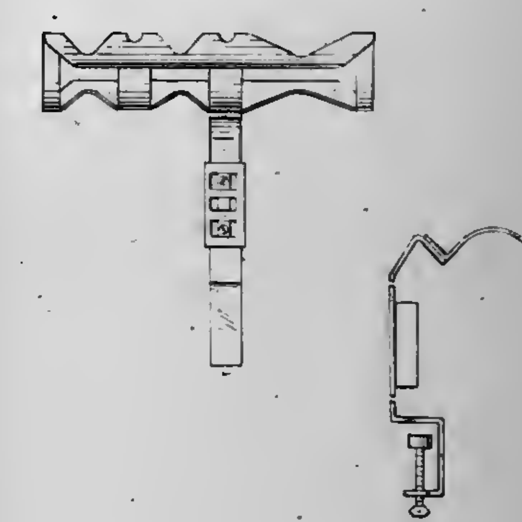

261,819
DECORATIVE LAMINATE SHEET
Harry R. Ford, Parkdale, Ohio, and Koichi Hirakawa, Chiba, Japan, assignors to Formica Corporation, Cincinnati, Ohio
Filed Jul. 11, 1978, Ser. No. 923,609
Term of patent 14 years
Int. Cl. D5—*06*
U.S. Cl. D92—1 R

LIST OF PATENTEES

TO WHOM

PATENTS WERE ISSUED ON THE 10TH DAY OF NOVEMBER, 1981

NOTE.—Arranged in accordance with the first significant character or word of the name (in accordance with city and telephone directory practice).

A. J. Park & Son: *See—*
Robertson, Angus A. J.; France, Carey J.; and Roberts, Colin A., 4,299,010, Cl. 17-50.000.
A-1 Engineering, Inc.: *See—*
Neuman, Clayton L., 4,299,707, Cl. 210-791.000.
A/S Den Norske Remfabrik: *See—*
Haaland, Per, 4,299,399, Cl. 277-207.00A.
AAA Products International, Inc.: *See—*
Womack, Robert C., 4,299,294, Cl. 173-148.000.
AB Maskinarbeten: *See—*
Johansson, Ingvar H.; Sanden, Per-Olof; Holmgren, Pahr O. A.; and Johansson, Helle G., 4,299,074, Cl. 53-529.000.
Abbott, Bernard J.; and Fukuda, David S., to Eli Lilly and Company. A-30912D Nucleus. 4,299,762, Cl. 260-112.50R.
Abbott, Bernard J.; and Fukuda, David S., to Eli Lilly and Company. A-30912B Nucleus. 4,299,763, Cl. 260-112.50R.
Abe, Ikuzo: *See—*
Niu, Tokihide; Yuuzu, Takayoshi; Abe, Ikuzo; and Shigematsu, Koichi, 4,300,032, Cl. 219-10.55B.
Abe, Mitsuhiro: *See—*
Hayama, Yasunobu; Tanouchi, Kuniaki; Abe, Mitsuhiro; and Ohkura, Katsuhiro, 4,299,104, Cl. 72-20.000.
Abenhaim, Georges; and Francillon, Gerard, to Framatome. Process for running a nuclear reactor cooled with light water. 4,299,657, Cl. 376-217.000.
Abiko, Kenji: *See—*
Kimira, Hiroshi; Abiko, Kenji; Sato, Takashi; Yoshii, Isamu; Watanabe, Sadao; and Takei, Yutaka, 4,299,622, Cl. 75-124.000.
AccuRay Corporation: *See—*
Sturm, Steven P., 4,300,049, Cl. 250-339.000.
ACF Industries, Inc.: *See—*
Tansuwan, Chusak, 4,300,205, Cl. 364-578.000.
Ackerman, Daniel W., to Universal Instruments Corporation. Electrical connector. 4,299,436, Cl. 339-258.00R.
Ackermann, Peter: *See—*
Dingwall, John G.; Greuter, Hans; Martin, Pierre; Ackermann, Peter; and Gsell, Laurenz, 4,299,967, Cl. 549-65.000.
Adams, George L.: *See—*
Silvermetz, David; and Adams, George L., 4,299,114, Cl. 73-1.00H.
Addario, Aldo. Detachable lamp assembly. 4,300,188, Cl. 362-226.000.
Adorno, Vincent C.; Fessenden, Elizabeth A.; Barr, Stephen R.; Gibson, Zebulon T., Jr.; and Carroll, John P., to Aluminum Company of America. Apparatus and method for efficient transfer of powdered ore. 4,299,683, Cl. 204-246.000.
Advanced Graphic Technology: *See—*
Arnold, Raymond M., 4,299,644, Cl. 156-230.000.
Agence Nationale de Valorisation de la Recherche (ANVAR): *See—*
Badoz, Jacques; Boccara, Albert; and Fournier born Juillard, Daniele, 4,299,494, Cl. 356-432.000.
Helffer, Bernard; and Raisin, Jean-Pierre, 4,299,179, Cl. 112-121.120.
Agfa-Gevaert AG: *See—*
Wernicke, Ubbo, 4,299,913, Cl. 430-379.000.
Agfa-Gevaert Aktiengesellschaft: *See—*
Wagner, Karl; and Wagensonner, Eduard, 4,299,467, Cl. 354-195.000.
Agrico Chemical Company: *See—*
Parks, Kenneth L.; Clevenger, Kyle D.; and McDonald, Daniel P., 4,299,804, Cl. 423-321.00R.
Aihara, Sukeji: *See—*
Omura, Yoshiaki; Mori, Fumio; Fujita, Yoshiji; Nishida, Takashi; Hosogai, Takeo; Aihara, Sukeji; Tamai, Yoshin; Wada, Fumio; and Itoi, Kazuo, 4,299,839, Cl. 424-274.000.
Air Industrie: *See—*
Cordier, Andre; and de Metz-Noblat, Benoit, 4,299,602, Cl. 55-240.000.
Aiyama, Fumihiko; and Hiramatsu, Kenzo, to Kioritz Corporation. Collecting filter bag. 4,299,605, Cl. 55-370.000.
Ajinomoto Company, Incorporated: *See—*
Obana, Haruo; Shirakawa, Tadashi; Hikuma, Motohiko; Yasuda, Takeo; Karube, Isao; and Suzuki, Shuichi, 4,299,669, Cl. 204-1.00T.
Akademia Nauk: *See—*
Barta, Cestmir; Ctyroky, Jiri; Silvestrova, Iraida M.; and Pisarevskij, Jurij V., 4,299,448, Cl. 350-358.000.
Akademie der Wissenschaften der DDR: *See—*
Lassmann, Gunter; Ebert, Bernd; and Klimes, Norbert, 4,299,337, Cl. 222-135.000.
Akerman & Jeavons (Birmingham) Ltd.: *See—*
Ketley, Keith H., 4,299,354, Cl. 230-12.00A.
Aktiebolaget Indesko: *See—*
Hagberg, Lars; and Jonsen, Ake, 4,299,189, Cl. 118-675.000.
Akutsu, Norio: *See—*
Tanaka, Minoru; Itoh, Fumikazu; Saitoh, Hiroshi; Kobayashi, Takashi; Sasaki, Akiyoshi; and Akutsu, Norio, 4,299,023, Cl. 29-564.100.
Akzona Incorporated: *See—*
Hewett, Colin L.; and Savage, David S., 4,299,984, Cl. 564-426.000.
Hof, Craig R.; Osio, Concepcion; and Ulin, Roy A., 4,299,727, Cl. 252-408.000.
Alan Shelton Limited: *See—*
Shelton, William E. A., 4,299,359, Cl. 242-131.000.
Albright, Jay D.: *See—*
McEvoy, Francis J.; Wright, William B., Jr.; Birnberg, Gary H.; and Albright, Jay D., 4,299,769, Cl. 260-326.350.
Alex, James J.; and Fichter, June C., to Polaroid Corporation. Self-developing camera back with removable processing assembly. 4,299,471, Cl. 354-304.000.
Allais, Andre: *See—*
Clemence, Francois; Deraedt, Roger; Allais, Andre; and Le Martret, Odile, 4,299,831, Cl. 424-251.000.
Allan, Brian W., to Texaco Canada Inc. Demulsifying petroleum emulsions with aryl sulfonates-oxyalkylated phenolformaldehyde resins and alkali metal halides. 4,299,690, Cl. 208-188.000.
Allied Chemical Corporation: *See—*
Sellers, Gregory J.; Durand, Kevin J.; and Bretts, Gerald R., 4,300,180, Cl. 360-130.330.
Allied Industries: *See—*
Paulson, Jerome I., 4,299,693, Cl. 209-3.000.
Alm, Bernard D., to FMC Corporation. Restraining wheel means. 4,299,265, Cl. 157-1.100.
Aloi, Anthony J.; and Fritz, Robert J., to United States of America, Air Force. Last round detection device. 4,299,158, Cl. 89-137.000.
Alsthom-Atlantique: *See—*
Bezard, Christian; and Deroyer, Patrick, 4,299,703, Cl. 210-512.100.
Alston, Robert B., to Texaco Inc. Enhanced oil recovery employing blend of carbon dioxide, inert gas and intermediate hydrocarbons. 4,299,286, Cl. 166-274.000.
Aluminum Company of America: *See—*
Adorno, Vincent C.; Fessenden, Elizabeth A.; Barr, Stephen R.; Gibson, Zebulon T., Jr.; and Carroll, John P., 4,299,683, Cl. 204-246.000.
Cochran, C. Norman; and Fitzgerald, Nancy M., 4,299,619, Cl. 75-10.00R.
ALZA Corporation: *See—*
Eckenhoff, James B., 4,299,222, Cl. 128-278.000.
AM International, Inc.: *See—*
Seelenbinder, Terry G.; and Hudson, Walter A., 4,299,472, Cl. 354-318.000.
Amazawa, Kiyoshi: *See—*
Tanaka, Kouichi; and Amazawa, Kiyoshi, 4,300,104, Cl. 330-280.000.
Ambler, E. Curtis, to Stanley Works, The. Mitre box. 4,299,152, Cl. 83-763.000.
Ambrose, Richard J.: *See—*
Hergenrother, William L.; Schwarz, Richard A.; Ambrose, Richard J.; and Hayes, Robert A., 4,299,932, Cl. 525-130.000.
American Can Company: *See—*
Wallen, Fred L.; and Huxel, Edward, 4,299,850, Cl. 426-124.000.
American Cyanamid Company: *See—*
Granzow, Albrecht H., 4,299,760, Cl. 260-45.9KA.
Heffernan, William R.; Vega, Mary-Louise; and Gingras, Joel A., Sr., 4,299,185, Cl. 116-202.000.
McEvoy, Francis J.; Wright, William B., Jr.; Birnberg, Gary H.; and Albright, Jay D., 4,299,769, Cl. 260-326.350.
Panzer, Hans P.; Rothenberg, Alan S.; and Cutrufello, Paul F., 4,299,939, Cl. 526-258.000.
Wissner, Allan, 4,299,988, Cl. 568-379.000.
American Express Company: *See—*
Golicz, Roman M.; Gunther, William H., Jr.; and Hough, James W., 4,299,073, Cl. 53-493.000.
American Hoechst Corporation: *See—*
Liu, Shuchen, 4,299,906, Cl. 430-157.000.
Stewart, David E., 4,299,744, Cl. 260-23.0AR.
American Optical Corporation: *See—*
Young, John M., 4,299,032, Cl. 33-174.00A.
Amikura, Takashi: *See—*
Suzuki, Ryoichi; Matsumoto, Seiichi; Amikura, Takashi; Tsunekawa, Tokuichi; and Uchiyama, Takashi, 4,299,462, Cl. 354-53.000.
Amos, Richard W.: *See—*
Miller, Kirk D.; Flood, John B.; Dimou, George; Kara, Frederick E.; and Amos, Richard W., 4,299,624, Cl. 75-130.00R.

Amtel, Inc.: *See—*
Jansen, Martin B., 4,299,260, Cl. 141-311.00R.
Amtrol Inc.: *See—*
Becker, Bernard B.; Bowman, John K.; and Lane, Joseph A., 4,299,248, Cl. 137-202.000.
Anchor Hocking Corporation: *See—*
Ochs, Charles S.; and Koontz, Carl E., 4,299,328, Cl. 215-252.000.
Anderson, Clifford E.: *See—*
Kinley, John C.; Dieckman, Harry E.; and Anderson, Clifford E., 4,299,033, Cl. 33-178.00F.
Anderson, Perry W.: *See—*
Glabe, Elmer F.; Anderson, Perry W.; and Laftsidis, Stergios, 4,299,854, Cl. 426-331.000.
Anderson, William B.: *See—*
Blanc, Max A., 4,299,208, Cl. 128-62.00A.
Anderson, Willis H.: *See—*
Sheridan, John J.; and Anderson, Willis H., 4,300,114, Cl. 338-172.000.
Ando, Ryo; Araki, Shigeru; Hoshi, Hideaki; and Sato, Kazuyoshi, to Nippon Kokan Kabushiki Kaisha. Method and apparatus for manufacturing crystalline blast furnace slag. 4,299,610, Cl. 65-19.000.
Andoh, Haruo: *See—*
Togawa, Fumio; Andoh, Haruo; and Tanabe, Toshihiko, 4,299,882, Cl. 428-329.000.
Andrepont, John S., to Chicago Bridge & Iron Company. Conduit bypass of articulated joint, such as at the base of an offshore column. 4,299,262, Cl. 141-387.000.
Andrews, Gilman B.; and Goodrich, George W., to Bendix Corporation, The. Multi-function engine sensor. 4,299,117, Cl. 73-35.000.
Anfimov, Alexandr F.: *See—*
Azbukin, Vladimir G.; Balandin, Jury F.; Gorynin, Igor V.; Gluskin, Lev Y.; Zvezdin, Jury I.; Ignatenko, Alexandr G.; Krasnov, Alexandr N.; Melekhov, Rostislav K.; Osipova, Inna S.; Pavlov, Valery N.; Khokhlov, Alexandr A.; Stepanov, Ivan A.; Anfimov, Alexandr F.; Ardentov, Vasily V.; Burmakin, Viktor M.; Ignatov, Viktor A.; Rokhlin, Eduard A.; and Zhitkov, Vladimir V., 4,299,623, Cl. 75-128.00R.
Angel, Brian R.; and Bradshaw, Robert W., to Yara Engineering Corporation. Methods of producing kaolin pigments. 4,299,807, Cl. 423-327.000.
Angersbach, Wolfgang; and Meier, Karl-Heinz, to Quick-Rotan Becker & Notz KG. Speed-regulated positioning drive. 4,300,082, Cl. 318-614.000.
Anic, S.p.A.: *See—*
Cucinella, Salvatore, 4,299,986, Cl. 568-8.000.
Aoon, Ramon L. Anti-contamination device for use in operating theatres. 4,299,215, Cl. 128-200.240.
Ansell, Joseph L.; and Baker, Raymond J., to United States of America, Army. Multilayer via resistors. 4,300,115, Cl. 338-314.000.
Antonoplos, Patricia A.; and Heilman, William J., to Gulf Oil Corporation. Novel partially acetylene end-capped polyimide oligomers. 4,299,750, Cl. 260-30.200.
Antos, George J., to UOP Inc. Hydrocarbon conversion with an attenuated superactive multimetallic catalytic composite. 4,299,689, Cl. 208-139.000.
Aoki, Hiroyuki: *See—*
Sugiura, Kensuke; Kagaya, Mineo; Aoki, Hiroyuki; and Takehara, Takeitiro, 4,299,714, Cl. 252-73.000.
Aoki, Katashi. Method for the prevention of drooling from a plastic injection molding mold and injection nozzles. 4,299,791, Cl. 264-328.900.
Aoki, Mitsugu; Oana, Yoshinori; Kato, Yasuo; and Ishihara, Taketoshi, to Tokyo Kogaku Kikai Kabushiki Kaisha. Vision testing instrument. 4,299,455, Cl. 351-30.000.
Aoki, Motohisa; Kawakami, Isao; and Nishihara, Masami, to Mitsubishi Chemical Ind., Ltd.; and Teikoku Kako Co., Ltd. Deoxidizer. 4,299,719, Cl. 252-188.000.
Aoki, Takashi: *See—*
Nishikawa, Masao; Toshimitsu, Yoshihiko; Aoyama, Toshihiko; Takaoka, Tokuro; Aoki, Takashi; and Sato, Yoichi, 4,299,302, Cl. 180-148.000.
Aoyama, Toshihiko: *See—*
Nishikawa, Masao; Toshimitsu, Yoshihiko; Aoyama, Toshihiko; Takaoka, Tokuro; Aoki, Takashi; and Sato, Yoichi, 4,299,302, Cl. 180-148.000.
Apotheker, David, to Du Pont de Nemours, E. I., and Company. S-Triazine-2,4,6-triones. 4,299,958, Cl. 544-221.000.
Appleton Papers Inc.: *See—*
Brockett, Bruce W., 4,299,411, Cl. 282-27.500.
Arai, Hajime: *See—*
Kako, Hiroyoshi; and Arai, Hajime, 4,299,140, Cl. 74-665.00G.
Araki, Shigeru: *See—*
Ando, Ryo; Araki, Shigeru; Hoshi, Hideaki; and Sato, Kazuyoshi, 4,299,610, Cl. 65-19.000.
Archie, William C., Jr.; and Campbell, Gerald A., to Eastman Kodak Company. Photographic elements containing polymers which coordinate with metal ions. 4,299,895, Cl. 430-17.000.
Ardentov, Vasily V.: *See—*
Azbukin, Vladimir G.; Balandin, Jury F.; Gorynin, Igor V.; Gluskin, Lev Y.; Zvezdin, Jury I.; Ignatenko, Alexandr G.; Krasnov, Alexandr N.; Melekhov, Rostislav K.; Osipova, Inna S.; Pavlov, Valery N.; Khokhlov, Alexandr A.; Stepanov, Ivan A.; Anfimov, Alexandr F.; Ardentov, Vasily V.; Burmakin, Viktor M.; Ignatov, Viktor A.; Rokhlin, Eduard A.; and Zhitkov, Vladimir V., 4,299,623, Cl. 75-128.00R.
Arens, Robert P., to Minnesota Mining and Manufacturing Company. Demand and timed renewing imaging media. 4,299,880, Cl. 428-304.000.
Arima, Kazutaka; and Kitano, Yoshiyuki, to Japanese National Railways. Levitation and guide mechanism for curved track in inductive repulsion type vehicle magnetic levitation and guide system. 4,299,173, Cl. 104-284.000.
Arima, Takeo; and Furuyama, Akira, to Hochiki Corporation. Fire alarm system. 4,300,132, Cl. 340-629.000.
Armour, Albert G., to Du Pont de Nemours, E. I., and Company. Metallic polymeric dispersion coating composition. 4,299,752, Cl. 260-31.40R.
Arnold, Raymond M., to Advanced Graphic Technology. Heat transfer decal. 4,299,644, Cl. 156-230.000.
Aro, Ernesto, to Orion Industries, Inc. Locking fuel cap with plastic mechanism. 4,299,102, Cl. 70-165.000.
Arras, Ludwig: *See—*
Schonfeld, Harald; Hack, Heinrich; and Arras, Ludwig, 4,300,197, Cl. 364-508.000.
Arrow Huss Inc.: *See—*
Larson, Howard L., 4,299,171, Cl. 104-70.000.
Asahi-Dow Limited: *See—*
Kuribayashi, Isao; Ohzeki, Jurou; and Shimamura, Kiyoshi, 4,299,757, Cl. 260-42.180.
Asahi Glass Company, Ltd.: *See—*
Oda, Yoshio; Morimoto, Takeshi; and Suzuki, Kohji, 4,299,682, Cl. 204-265.000.
Asai, Akira: *See—*
Watanabe, Tomoyoshi; Nakai, Toshio; Kuzuya, Susumu; Onoda, Hiroshi; Asai, Akira; Iwase, Takayuki; and Nakamura, Kazuo, 4,299,503, Cl. 400-161.500.
Asakawa, Tatsushi: *See—*
Nakazaki, Yasunori; and Asakawa, Tatsushi, 4,300,224, Cl. 368-201.000.
Asanagi, Etsuo: *See—*
Miyoshi, Hajime; Okabayashi, Ikuo; and Asanagi, Etsuo, 4,299,516, Cl. 405-266.000.
Asayama, Yoshiaki; and Mizuta, Kazuyuki, to Mutsuhishi Denki Kahushiki Kaisha. Suction system in an engine. 4,299,121, Cl. 73-118.000.
Asbeck, Adolf; Eckelt, Michael; Erwied, Werner; Heyden, Rudi; and Petzold, Manfred, to Henkel Kommanditgesellschaft auf Aktien. Sulfosuccinate emulsifiers. 4,299,975, Cl. 560-151.000.
Asculai, Samuel S.: *See—*
Brandt, Eva J.; and Asculai, Samuel S., 4,299,814, Cl. 424-1.000.
Ashland Oil, Inc.: *See—*
Daniel, Chelliah; and Brusky, Phyllis L., 4,299,980, Cl. 562-599.000.
Myers, George D.; and Busch, Lloyd E., 4,299,687, Cl. 208-113.000.
Aska Electrons Co.: *See—*
Fujii, Masaharu; and Nakamura, Kenichi, 4,300,047, Cl. 250-330.000.
Asselineau, Lionel: *See—*
Mikitenko, Paul; and Asselineau, Lionel, 4,299,999, Cl. 568-697.000.
Astro Dynamics, Inc.: *See—*
Katz, Leonhard; and Ormord, Lawrence A., 4,300,077, Cl. 318-812.000.
Asztalos, Stefan: *See—*
Benkmann, Christian; Leitgeb, Paul; and Asztalos, Stefan, 4,299,595, Cl. 55-21.000.
Atari, Inc.: *See—*
Jenkins, Harry H., Jr., 4,299,446, Cl. 350-296.000.
Atchisson, Maxwell G. Single-shot survival rifle. 4,299,046, Cl. 42-75.00D.
Atchisson, Maxwell G. Carbine sling and pouch. 4,299,343, Cl. 224-149.000.
Athey, Stuart E.; and McCord, Dick P., to Hobart Corporation. Method and apparatus for analysis of meat products. 4,299,115, Cl. 73-15.00B.
Atlantic Richfield Company: *See—*
Baillie, Lloyd A.; and Uhl, George A., 4,299,116, Cl. 73-30.000.
Hsu, Chao-Yang; and Kesling, Haven S., Jr., 4,299,976, Cl. 560-190.000.
Atwood, Robert W.: *See—*
Pimentel, Gary W.; Poznick, Jeffrey B.; and Atwood, Robert W., 4,299,049, Cl. 46-8.000.
Aubert, Jean P.; Gasser, Francis; and Longin, Robert, to Institut Pasteur. Proteins containing nutritious materials and food compositions containing such nutritious materials. 4,299,858, Cl. 426-656.000.
AuClair, Christoper J.: *See—*
Williams, Meurig W.; and AuClair, Christoper J., 4,299,898, Cl. 430-106.000.
AuClair, Christopher J.; and Lu, Chin H., to Xerox Corporation. Emulsion polymerization process for dry positive toner compositions employs charge control agent as wetting agent. 4,299,903, Cl. 430-137.000.
Aucouturier, Lucien, to SEMED. Adjustable focusing mirror. 4,299,445, Cl. 350-295.000.
Aulich, Hubert; Auracher, Franz; and Witte, Hans H., to Siemens Aktiengesellschaft. Optical unit having a longitudinal side coupling zone. 4,299,609, Cl. 65-3.130.
Auracher, Franz: *See—*
Aulich, Hubert; Auracher, Franz; and Witte, Hans H., 4,299,609, Cl. 65-3.130.
Austel, Volkhard; Kutter, Eberhard; Heider, Joachim; and Diederen, Willi, to Boehringer Ingelheim Gesellschaft mit beschrankter Haft-

ung. 8-Phenyl-purines and pharmaceutical compositions containing same. 4,299,834, Cl. 424-253.000.
Australian Agricultural Machinery Pty. Ltd.: *See—*
Hughes, William F., 4,299,292, Cl. 172-311.000.
Australian Telecommunications Commission: *See—*
Gibbs, Alan J., 4,300,233, Cl. 371-22.000.
Auto Trends, Inc.: *See—*
Helm, Frederick A., 4,299,346, Cl. 224-325.000.
Autologic, Inc.: *See—*
Burton, John S., 4,299,458, Cl. 354-6.000.
Automation Devices, Inc.: *See—*
Heiges, Robert W., 4,300,083, Cl. 318-686.000.
Automobiles Peugeot: *See—*
Dossin, Jacques, 4,299,418, Cl. 293-126.000.
Automotive Products Limited: *See—*
Hales, Eric C.; and Hodkinson, Harold, 4,299,426, Cl. 303-6.00C.
Parsons, David; Taylor, Maurice; and Young, Alastair J., 4,299,314, Cl. 192-12.00C.
Autovox S.p.A.: *See—*
Dellantonio, Ezio F., 4,299,132, Cl. 74-10.330.
Avins, Jeremiah Y., to RCA Corporation. Incremental encoder. 4,300,039, Cl. 235-92.0EV.
Aya, Toshihiko; Sasagawa, Takashi; and Kadoi, Sho, to Toray Industries, Inc. Thermoplastic polyamide imide copolymers and method of preparation. 4,299,945, Cl. 528-126.000.
Ayers, Jack D.: *See—*
Schaefer, Robert J.; Ayers, Jack D.; and Tucker, Thomas R., 4,299,860, Cl. 427-53.100.
Azar, Jack C.; and Wellman, Russel E., to Xerox Corporation. Toner additives. 4,299,899, Cl. 430-108.000.
Azbukin, Vladimir G.; Balandin, Jury F.; Gorynin, Igor V.; Gluskin, Lev Y.; Zvezdin, Jury I.; Ignatenko, Alexandr G.; Krasnov, Alexandr N.; Melekhov, Rostislav K.; Osipova, Inna S.; Pavlov, Valery N.; Khokhlov, Alexandr A.; Stepanov, Ivan A.; Anfimov, Alexandr F.; Ardentov, Vasily V.; Burmakin, Viktor M.; Ignatov, Viktor A.; Rokhlin, Eduard A.; and Zhitkov, Vladimir V. Corrosion-resistant weldable martensitic stainless steel, process for the manufacture thereof and articles. 4,299,623, Cl. 75-128.00R.
Azuma, Keiji: *See—*
Nanjo, Motoyuki; Watanabe, Tsutomu; Koshibe, Shigeru; and Azuma, Keiji, 4,299,947, Cl. 528-139.000.
Azuma, Kenkoku: *See—*
Takeyama, Tetsu; Azuma, Kenkoku; Ikeda, Akira; Yamamoto, Toshie; and Katsurada, Shigeho, 4,299,599, Cl. 55-180.000.
Baba, Masaharu; Honda, Kiyokazu; Yoshiike, Yoshiji; and Hashima, Akiyoshi, to Tokyo Shibaura Denki Kabushiki Kaisha. Lamp holder for baseless lamp. 4,299,430, Cl. 339-17.00D.
Bacehowski, David V.; Kwong, Peter C.; Bowerman, Harold H., Jr.; and Czuba, Leonard F., to Baxter Travenol Laboratories, Inc. Coextruded silicone-containing tubing having long term frictional lubrication properties. 4,299,256, Cl. 138-137.000.
Bach, Thomas H.: *See—*
McCarthy, Francis L.; and Bach, Thomas H., 4,299,749, Cl. 260-29.60Z.
Bachmann, Lothar. Expansion joint. 4,299,414, Cl. 285-187.000.
Badge-A-Mint Ltd.: *See—*
Roebuck, Malcolm J., 4,299,019, Cl. 29-243.520.
Badger Safe Protectors: *See—*
Loehle, Mary J., 4,299,176, Cl. 109-34.000.
Badoz, Jacques; Boccara, Albert; and Fournier born Juillard, Daniele, to Agence Nationale de Valorisation de la Recherche (ANVAR). Measurement of heat transfer between a specimen and an ambient medium. 4,299,494, Cl. 356-432.000.
Baidwan, Balinderjeet S.; and Iwaski, Dean H. Vented piston and push-rod subassembly for use in a syringe barrel. 4,299,238, Cl. 128-763.000.
Baillie, Lloyd A.; and Uhl, George A., to Atlantic Richfield Company. Methods involving differential pressure determinations. 4,299,116, Cl. 73-30.000.
Baird, Norman F.; and Parascandola, Louis J. Article capable of creating a moire effect. 4,300,068, Cl. 313-315.000.
Bairnji, Riyoichi; Kawabata, Tatsuo; and Tanaka, Tatsundo, to Toray Industries, Inc. Liquid separation apparatus. 4,299,702, Cl. 210-433.200.
Baker, Eugene E.; and Carter, Ernest E., Jr., to Halliburton Services. Inflatable packer assembly with control valve. 4,299,397, Cl. 277-34.000.
Baker, Raymond J.: *See—*
Ansell, Joseph L.; and Baker, Raymond J., 4,300,115, Cl. 338-314.000.
Bakke, Alf: *See—*
Vite, Jean P.; and Bakke, Alf, 4,299,818, Cl. 424-84.000.
Balandin, Jury F.: *See—*
Azbukin, Vladimir G.; Balandin, Jury F.; Gorynin, Igor V.; Gluskin, Lev Y.; Zvezdin, Jury I.; Ignatenko, Alexandr G.; Krasnov, Alexandr N.; Melekhov, Rostislav K.; Osipova, Inna S.; Pavlov, Valery N.; Khokhlov, Alexandr A.; Stepanov, Ivan A.; Anfimov, Alexandr F.; Ardentov, Vasily V.; Burmakin, Viktor M.; Ignatov, Viktor A.; Rokhlin, Eduard A.; and Zhitkov, Vladimir V., 4,299,623, Cl. 75-128.00R.
Balaspiri, Lajos: *See—*
Kisfaludy, Lajos; Szirtes, Tamas; Balaspiri, Lajos; Palosi, Eva; Szporny, Laszlo; and Sarkadi, Adam, 4,299,821, Cl. 424-177.000.
Balayan, Ruben D.: *See—*
Chizhikov, Vladimir M.; Matskin, Leonid A.; Fokin, Mikhail N.; Timofeev, Boris P.; Tokar, Mark N.; Balayan, Ruben D.; Trubin, German A.; Melik-Shakhnazarov, Alexandr M.; Barabashov, Dmitry A.; Dmitriev, Vladimir A.; and Vakhlyaev, Sergei V., 4,300,202, Cl. 364-567.000.
Ball, William J.; Palmer, Keith W.; and Stewart, David G., to British Petroleum Company Limited, The. Process for the production of amorphous aluminosilicates and their use as catalysts. 4,299,732, Cl. 252-455.00R.
Ballas, John S., Jr.: *See—*
Epstein, Paul; Ballas, John S., Jr.; Van Horn, Joseph M.; and Mandler, John J., Jr., 4,299,234, Cl. 128-698.000.
Ballinger, Dale O., to Honeywell Inc. Acoustic transducer housing. 4,300,217, Cl. 367-140.000.
Balme, Maurice; and Locatelli, Jean-Louis, to Rhone-Poulenc Industries. Imido copolymers from oligoimide and phenolic compound. 4,299,946, Cl. 528-128.000.
Bangor Plastics, Inc.: *See—*
Wokeck, Glenn F., 4,299,160, Cl. 99-323.500.
Banka, Vidya S. Coronary dilation method. 4,299,226, Cl. 128-344.000.
Barabashov, Dmitry A.: *See—*
Chizhikov, Vladimir M.; Matskin, Leonid A.; Fokin, Mikhail N.; Timofeev, Boris P.; Tokar, Mark N.; Balayan, Ruben D.; Trubin, German A.; Melik-Shakhnazarov, Alexandr M.; Barabashov, Dmitry A.; Dmitriev, Vladimir A.; and Vakhlyaev, Sergei V., 4,300,202, Cl. 364-567.000.
Baranowski, Conrad J.; and Bedell, Joel T., to Powercube Corporation. Pulse width modulated current fed inverter power supply. 4,300,191, Cl. 363-17.000.
Barber, Nigel T.: *See—*
Parnum, John D.; and Barber, Nigel T., 4,299,061, Cl. 51-101.00R.
Barbero, Piero: *See—*
Monticelli, Mario; and Barbero, Piero, 4,299,370, Cl. 248-278.000.
Barbier, Daniel; Ittel, Jean-Michel; and Poujois, Robert, to Commissariat a l'Energie Atomique. Alarm detector responsive to rate change of a monitored condition. 4,300,048, Cl. 250-338.000.
Barker, Lynn M., to Terra Tek, Inc. Method for determining plane strain fracture toughness of non-elastic fracture mechanics specimens. 4,299,120, Cl. 73-87.000.
Barlow, Anthony: *See—*
Maringer, Melvin F.; and Barlow, Anthony, 4,299,713, Cl. 174-110.0SR.
Barlow, Derek; and Perkins, Charles V., to Pye Electronic Products Limited. Spectrophotometer. 4,299,485, Cl. 356-307.000.
Barmby, David S.: *See—*
Kirsch, Francis W.; Barmby, David S.; and Potts, John D., 4,300,015, Cl. 585-722.000.
Barnes, Charles A.; and von Behren, Robert A., to Minnesota Mining and Manufacturing Co. Composite magnetic bead with multitrack support structure. 4,300,179, Cl. 360-127.000.
Barnet, Ronald W. Magnetic retention system for intraocular lens. 4,298,996, Cl. 3-13.000.
Barnette, William E.; and Fox, Edward C., to RCA Corporation. Compensation apparatus for a servo system with periodic command sigoals. 4,300,226, Cl. 369-45.000.
Barnhouse, Larry: *See—*
Sieghartner, Leonard J.; and Barnhouse, Larry, 4,299,536, Cl. 415-198.200.
Barnish, Ian T.; Cross, Peter E.; and Danilewicz, John C., to Pfizer Inc. Therapeutic process employing amides of L and DL phenylglycines. 4,299,820, Cl. 424-177.000.
Barr, Stephen R.: *See—*
Adorno, Vincent C.; Fessenden, Elizabeth A.; Barr, Stephen R.; Gibson, Zebulon T., Jr.; and Carroll, John P., 4,299,683, Cl. 204-246.000.
Barta, Cestmir; Ctyroky, Jiri; Silvestrova, Iraida M.; and Pisarevskij, Jurij V., to Ceskoslovenska akademie ved; and Akademia Nauk. Acousto-optic device. 4,299,448, Cl. 350-358.000.
Bartholomew, Michael: *See—*
Collins, Basil C.; Bartholomew, Michael; and Perry, Roy H., 4,299,031, Cl. 33-18.00R.
Bartilson, Benjamin M.: *See—*
Yates, Jan B.; and Bartilson, Benjamin M., 4,299,515, Cl. 405-259.000.
Bartolini, Robert A.: *See—*
Bell, Alan E.; Bartolini, Robert A.; Bloom, Allen; and Burke, William J., 4,300,143, Cl. 346-135.100.
Barton, George G., Jr. Multi-channel fishscope. 4,300,216, Cl. 367-113.000.
Barton, Roy C.; and Smith, Dale A., to Barton, Roy C. Tractor-mountable front and rear bale-impaling hay-carriers. 4,299,522, Cl. 414-24.500.
BASF Aktiengesellschaft: *See—*
Simenc, Toni; and Petersen, Harro, 4,299,592, Cl. 8-496.000.
Baskent, Feyyaz O.; and Reedy, James D., to Union Carbide Corporation. Alkyl-modified siloxane copolymers useful as foam stabilizers in high resilience polyurethane foam. 4,299,923, Cl. 521-110.000.
Bassetti, Aldo, to Miscelatori Dosatori Elettronica MIDEL S.r.l. Apparatus for storing and stirring viscous liquids contained in cans. 4,299,500, Cl. 366-198.000.
Bates, William T. D. Sample tube. 4,299,795, Cl. 73-864.010.
Batlle Crosas, Pedro, to Hiperblock, S.A. Anti-theft apparatus for vehicles. 4,300,057, Cl. 307-10.0AT.
Battelle Memorial Institute: *See—*
Columberg, Alfred, 4,299,937, Cl. 526-124.000.
Battle, Walter L. Leaf bag spreader and holder. 4,299,365, Cl. 248-99.000.

Baxter Travenol Laboratories, Inc.: *See—*

Bacehowski, David V.; Kwong, Peter C.; Bowerman, Harold H., Jr.; and Czuba, Leonard F., 4,299,256, Cl. 138-137.000.

Knigge, Vincent L.; and Shim, Norm, 4,299,218, Cl. 128-214.00F.

Bayer Aktiengesellschaft: *See—*

Berndt, Gerhard; Konig, Eberhard; Pedain, Josef; Thoma, Wilhelm; and Schroer, Walter, 4,299,868, Cl. 427-389.900.

Bien, Hans-Samuel; Beinert, Werner; and Wunderlich, Klaus, 4,299,966, Cl. 549-52.000.

Dahm, Manfred; Jabs, Gert; Koglin, Bernd; Schnoring, Hildegard; and Riecke, Kurt, 4,299,723, Cl. 252-316.000.

Jager, Horst, 4,299,764, Cl. 260-153.000.

Keggenhoff, Berthold; and Rosenkranz, Hans J., 4,299,755, Cl. 260-23.0AR.

Mohring, Edgar; Muller, Hanns P.; and Wagner, Kuno, 4,300,003, Cl. 568-863.000.

Weirauch, Kurt; Horbach, Alfred; and Vernaleken, Hugo, 4,299,948, Cl. 528-171.000.

Wissner, Adolf; Hauser, Werner; Bitners, Feliks; and Wambach, Raimund, 4,300,004, Cl. 570-211.000.

Bayer Antwerpen N.V.: *See—*

Benkmann, Christian; Leitgeb, Paul; and Asztalos, Stefan, 4,299,595, Cl. 55-21.000.

Bayer, Eric W.; and Palmisano, Edward A., to General Electric Company. Trip interlock for static trip circuit breakers. 4,300,110, Cl. 335-6.000.

Bayer, Franz, to Franz Xaver Bayer Isolierglasfabrik KG. Method for the production of laminates with spaced-apart glass panes. 4,299,639, Cl. 156-104.000.

Bayes, James W. Pest bird control. 4,299,048, Cl. 43-98.000.

BBC Brown, Boveri & Co., Ltd.: *See—*

Osman, Maged A.; Scheffer, Terry J.; Revesz, Laszlo; and Markert, Jurgen, 4,299,720, Cl. 252-299.100.

Beck, James R.; and Gajewski, Robert P., to Eli Lilly and Company. Novel algicidal method utilizing 1,4-diphenyl-3-pyrazolin-5-ones. 4,299,614, Cl. 71-67.000.

Becker, Bernard B.; Bowman, John K.; and Lane, Joseph A., to Amtrol Inc. Diaphragm valve air vent device for water systems. 4,299,248, Cl. 137-202.000.

Becker, Danny J.; Satzler, Ronald L.; and Koch, Keith E., to Caterpillar Tractor Co. Quick release seal retainer. 4,299,396, Cl. 277-12.000.

Beckman Instruments, Inc.: *See—*

Brown, James R., 4,300,203, Cl. 364-577.000.

Bedell, Joel T.: *See—*

Baranowski, Conrad J.; and Bedell, Joel T., 4,300,191, Cl. 363-17.000.

Beecham Group Limited: *See—*

Cassidy, Frederick; and Wootton, Gordon, 4,299,970, Cl. 560-39.000.

Goudie, Alexander C., 4,299,844, Cl. 424-308.000.

Beehler, Vernon D. Control system for well heating by steam. 4,299,278, Cl. 166-53.000.

Behrens, James D.; and Buckley, James W. Vertebral immobilization and extrication support. 4,299,209, Cl. 128-87.00B.

Beiersdorf Aktiengesellschaft: *See—*

Karmann, Werner; Weidehaas, Gerd; Howe, Bernd; and Piel, Frank, 4,299,231, Cl. 128-639.000.

Beinert, Werner: *See—*

Bien, Hans-Samuel; Beinert, Werner; and Wunderlich, Klaus, 4,299,966, Cl. 549-52.000.

Bekemeier, Karl H.: *See—*

Grommes, John J.; and Bekemeier, Karl H., 4,299,196, Cl. 125-11.0AT.

Belder, Eimbert G.; Legg, John C.; and van der Linde, Robert, to Internationale Octrooi Maatschappij "OCTROPA" B.V. Alkyds. 4,299,742, Cl. 260-22.0EP.

Bell, Alan E.; Bartolini, Robert A.; Bloom, Allen; and Burke, William J., to RCA Corporation. Thin protective overcoat layer for optical video disc. 4,300,143, Cl. 346-135.100.

Bell, Alan E., to RCA Corporation. Replicable optical recording medium. 4,300,227, Cl. 369-84.000.

Bell Industries, Inc.: *See—*

Kaye, Peter D., 4,299,142, Cl. 76-25.00A.

Bell Telephone Laboratories, Incorporated: *See—*

Bonner, William A., 4,299,650, Cl. 156-617.0SP.

Bonner, William A., 4,299,651, Cl. 156-617.0SP.

Copeland, John A., III, 4,300,107, Cl. 331-94.50H.

Grau, Thomas G., 4,299,432, Cl. 339-75.00M.

Haskell, Barin G., 4,300,161, Cl. 358-142.000.

Lepselter, Martin P., 4,300,152, Cl. 357-42.000.

Moffitt, Bryan S., 4,300,231, Cl. 370-86.000.

Niehaus, William C.; and Wemple, Stuart H., 4,300,148, Cl. 357-15.000.

Tomlinson, Walter J., III, 4,299,488, Cl. 356-328.000.

Yahalom, Joseph, 4,299,670, Cl. 204-29.000.

Belleson, James G.; Disbrow, John R.; and Eiselen, Everett T., to International Business Machines Corporation. Flexible text and image generator for a raster printer. 4,300,206, Cl. 364-900.000.

Beloit Corporation: *See—*

Skaugen, Borgeir, 4,299,655, Cl. 162-343.000.

Belotti, Giovanni, to L. ID. IT Lattoneria Idrotermica Italiano dei Fratelli Belotti. Apparatus for bending tubes or bars and motor-pump unit therefor. 4,299,113, Cl. 72-389.000.

Belrecolt S.A.: *See—*

Wattron, Albert, 4,299,077, Cl. 56-13.600.

Bemis, Alan G.: *See—*

Kuhlmann, George E.; and Bemis, Alan G., 4,299,977, Cl. 562-416.000.

Benckert, Willis J.; and Wangler, Richard J., to International Laser Systems, Inc. Area radiation target. 4,299,393, Cl. 273-310.000.

Bende, Zoltan: *See—*

Tungler, Antal; Mathe, Tibor; Petro, Jozsef; and Bende, Zoltan, 4,299,992, Cl. 568-587.000.

Bendix Autolite Corporation: *See—*

Romine, Donald J., 4,299,859, Cl. 427-34.000.

Bendix Corporation, The: *See—*

Andrews, Gilman B.; and Goodrich, George W., 4,299,117, Cl. 73-35.000.

Bengtsson, Nils K.; and Wikstrom, Bo B., to SAB Industri A.B. Electromagnetic track brake for a railway vehicle. 4,299,312, Cl. 188-165.000.

Benkmann, Christian; Leitgeb, Paul; and Asztalos, Stefan, to Linde Aktiengesellschaft; and Bayer Antwerpen N.V., a part interest. Method of operating a cyclical pressure-swing adsorption installation. 4,299,595, Cl. 55-21.000.

Benkmann, Christian, to Linde Aktiengesellschaft. Adsorption process for the separation of gaseous mixtures. 4,299,596, Cl. 55-26.000.

Bennet, William S., II: *See—*

Grove, Thomas C.; and Bennet, William S., II, 4,299,483, Cl. 356-152.000.

Bentley, James S.: *See—*

Skinner, John H.; and Bentley, James S., 4,299,676, Cl. 204-109.000.

Benz, Bernard D.; Carlin, Edward M., Jr.; and Gross, Thomas D., to Xerox Corporation. High capacity ribbon cartridge with surface drive. 4,299,504, Cl. 400-208.000.

Berg, Lloyd, to International Synthetic Rubber Co., Ltd. Separation of ethylbenzene from para- and meta-xylenes of extractive distillation. 4,299,668, Cl. 203-51.000.

Berger, Dieter; Frey, Gunter; Kuhr, Manfred; and Werner, Wolfgang, to Boehringer Manneheim GmbH. Diagnostic agents for the detection of leukocytes in body fluids. 4,299,917, Cl. 435-19.000.

Bergeron, William; and Chauvet, Bernard, to Compagnie Industrielle des Telecommunications Cit-Alcatel. Screened box. 4,300,016, Cl. 174-35.00R.

Berkholtz, Warren E., to Stauffer, Nelson R. Tail sealing apparatus. 4,299,642, Cl. 156-191.000.

Bernard, Thomas E.; and Stein, Richard L., to United States of America, Interior. Self-contained closed circuit breathing apparatus having a balanced breathing resistance system. 4,299,216, Cl. 128-205.120.

Berndt, Gerhard; Konig, Eberhard; Pedain, Josef; Thoma, Wilhelm; and Schroer, Walter, to Bayer Aktiengesellschaft. Coating compositions. 4,299,868, Cl. 427-389.900.

Berni, Albert J.: *See—*

Kruka, Vitold R.; Berni, Albert J.; Park, Lawrence D., Jr.; and Cadena, Edward R., 4,300,218, Cl. 367-165.000.

Bernin, Victor M. Solid state noncontacting keyboard employing a differential transformer element. 4,300,127, Cl. 340-365.00L.

Bertola, Amalia. Automatic locking device for the lid-opening lever of a pressure-cooker. 4,299,331, Cl. 220-316.000.

Bertschi, Hans G., to J. C. Penney Company, Inc. Partition connector system. 4,299,067, Cl. 52-127.000.

Bessam Manufacturing, Inc.: *See—*

Schlachet, Hugo, 4,299,601, Cl. 55-230.000.

Betensky, Ellis, to Vivitar Corporation. Wide angle to long focus zoom lens. 4,299,454, Cl. 350-427.000.

Bethea, Tristram W.; and Futamura, Shingo, to Firestone Tire & Rubber Company, The. Method for increasing the primary hydroxyl end groups in polyethers. 4,299,993, Cl. 568-617.000.

Bethlehem Steel Corporation: *See—*

Lynn, James B.; Laslo, Joseph A.; and Homberg, Otto A., 4,299,801, Cl. 423-228.000.

Bever, Hilton. Hydraulic oil well pumping apparatus. 4,299,545, Cl. 417-490.000.

Bezard, Christian; and Deroyer, Patrick, to Alsthom-Atlantique. Separator for separating a mixture of two liquids. 4,299,703, Cl. 210-512.100.

Bickerstaff, Kenneth; and Brewin, John D., to Pilkington Brothers Limited. Roll for use under high or low temperature conditions. 4,299,018, Cl. 29-129.000.

Bien, Hans-Samuel; Beinert, Werner; and Wunderlich, Klaus, to Bayer Aktiengesellschaft. Process for the preparation of 4,4',7,7'-tetrachlorthioindigo in pigment form. 4,299,966, Cl. 549-52.000.

Birat, Jean-Pierre; and Vedda, Louis, to Institut de Recherches de la Siderurgie Francaise. Cooling jacket for an ingot mold for the continuous casting of metal and an ingot mold provided with the cooling jacket. 4,299,267, Cl. 164-502.000.

Birkmeyer, William J., to PPG Industries, Inc. Reaction products of a polyglycidyl ether of a polyphenol and an amino acid and aqueous solubilized products therefrom. 4,299,747, Cl. 260-29.6NR.

Birnberg, Gary H.: *See—*

McEvoy, Francis J.; Wright, William B., Jr.; Birnberg, Gary H.; and Albright, Jay D., 4,299,769, Cl. 260-326.350.

Bitners, Feliks: *See—*

Wissner, Adolf; Hauser, Werner; Bitners, Feliks; and Wambach, Raimund, 4,300,004, Cl. 570-211.000.

Bittar, Joseph; and Deric, J. Mark, to Otis Elevator Company. Empty elevator car determination. 4,299,309, Cl. 187-29.00R.

Blanc, Max A.; to Blanc, Max A.; and Anderson, William B., a part interest. Gum massage device. 4,299,208, Cl. 128-62.00A.

Blawert, Dieter: *See—*

Knothe, Erich; Blawert, Dieter; and Melcher, Franz-Josef, 4,299,299, Cl. 177-264.000.

Bleistahl G.m.b.H.: *See—*

Koehler, Michael; and Petry, Wolfgang, 4,299,628, Cl. 75-230.000.

Block, Alvin, to Intimate Jewels, Inc. Earring. 4,299,101, Cl. 63-12.000.

Bloom, Allen: *See—*

Bell, Alan E.; Bartolini, Robert A.; Bloom, Allen; and Burke, William J., 4,300,143, Cl. 346-135.100.

Hung, Ling K.; and Bloom, Allen, 4,299,910, Cl. 430-270.000.

Bly, Vincent T., to United States of America, Army. Method of making visible light to far infrared transducer. 4,299,864, Cl. 427-160.000.

Boart International Limited: *See—*

McEnery, James O.; Morton, Frank W.; and O'Dea, John J., 4,299,298, Cl. 175-418.000.

Boccara, Albert: *See—*

Badoz, Jacques; Boccara, Albert; and Fournier born Juillard, Daniele, 4,299,494, Cl. 356-432.000.

Bochan, John, to General Electric Company. Two-speed clutch. 4,299,319, Cl. 192-103.00B.

Boden, Robert O. Racquet. 4,299,385, Cl. 273-73.00D.

Bodine, Albert G. Apparatus for sonically extracting oil well liners. 4,299,279, Cl. 166-72.000.

Boehringer Ingelheim Gesellschaft mit beschrankter Haftung: *See—*

Austel, Volkhard; Kutter, Eberhard; Heider, Joachim; and Diederen, Willi, 4,299,834, Cl. 424-253.000.

Boehringer Manneheim GmbH: *See—*

Berger, Dieter; Frey, Gunter; Kuhr, Manfred; and Werner, Wolfgang, 4,299,917, Cl. 435-19.000.

Boeing Company, The: *See—*

Dawson, John T., 4,299,172, Cl. 104-247.000.

Delsman, Robert L.; and Thompson, Norman D., 4,299,320, Cl. 192-113.00B

Boggs, Brenda J., to Eastman Kodak Company. Multi-component hot melt adhesives having excellent high temperature properties. 4,299,930, Cl. 525-74.000.

Boise Cascade Corporation: *See—*

Woerz, Stephen E., 4,299,350, Cl. 229-5.500.

Bolex International SA: *See—*

Ducommun, Pierre-Francois, 4,299,457, Cl. 352-140.000.

Bonner, William A., to Bell Telephone Laboratories, Incorporated. Minimization of strain in single crystals. 4,299,650, Cl. 156-617.0SP.

Bonner, William A., to Bell Telephone Laboratories, Incorporated. Production of single crystal II-V material. 4,299,651, Cl. 156-617.0SP.

Bontrager, Lloyd J. Telescopic trailer post support. 4,299,421, Cl. 296-27.000.

Boogay, Marc A. Backwashable helical-media coalescer. 4,299,699, Cl. 210-143.000.

Borg-Warner Chemicals, Inc.: *See—*

Sahajpal, Ved K.; Delaere, Jacques; Kromolicki, Zigmunt K.; and Settels, Mattheus R., 4,299,885, Cl. 428-403.000.

Born, Thorwald, to Huttenes-Albertus Chemische Werke GmbH. Cold-setting, polyurethane-based molding material binder. 4,299,751, Cl. 260-30.40N.

Borregaard Industries Limited, Norge: *See—*

Vite, Jean P.; and Bakke, Alf, 4,299,818, Cl. 424-84.000.

Borsy, Jozsef: *See—*

Mago nee Karacsony, Erzsebet; Toldy, Lajos; Borsy, Jozsef; Tardos, Laszlo; Kiraly, Ildiko; and Ronay, Andras, 4,299,836, Cl. 424-261.000.

Bostrom, Folke. Rock grader with tilting sorter screen. 4,299,695, Cl. 209-260.000.

Bourlier, Claude P.; and Sallot, Louis E. Lock chamber for the passage of packets or objects between a room reserved for the public and a premises which is isolated and protected from the public. 4,299,175, Cl. 109-19.000.

Bouwmeester, Gerrit, to U.S. Philips Corporation. Mechanism for transferring objects from one position to another. 4,299,532, Cl. 414-750.000.

Bowerman, Harold H., Jr.: *See—*

Bacehowski, David V.; Kwong, Peter C.; Bowerman, Harold H., Jr.; and Czuba, Leonard F., 4,299,256, Cl. 138-137.000.

Bowers, John L.: *See—*

Gentile, Anthony L.; Bowers, John L.; and Stafsudd, Oscar M., 4,299,649, Cl. 156-610.000.

Bowman, John K.: *See—*

Becker, Bernard B.; Bowman, John K.; and Lane, Joseph A., 4,299,248, Cl. 137-202.000.

Boyd, Kenneth L., to Magnavox Company, The. Projection television receiver having dichroic mirrors and a projecting lens with three different focal points. 4,300,156, Cl. 358-64.000.

Brachthauser, Kunibert: *See—*

Herchenbach, Horst; Ramesohl, Hubert; and Brachthauser, Kunibert, 4,299,564, Cl. 432-106.000.

Bradley, John J.; Miller, Robert C.; Miu, Ming T.; Shen, Jian-Kuo; and Staplin, Theodore R., Jr., to Honeywell Information Systems Inc. Data processing system having data multiplex control apparatus. 4,300,193, Cl. 364-200.000.

Bradley, John J.; Miu, Ming T.; and Shen, Jian-Kuo, to Honeywell Information Systems Inc. Data processing system having multiple common buses. 4,300,194, Cl. 364-200.000.

Bradshaw, Robert W.: *See—*

Angel, Brian R.; and Bradshaw, Robert W., 4,299,807, Cl. 423-327.000.

Brandigampola, Don E., to Valcom Limited. Coil loaded antenna embedded inglass fibre. 4,300,140, Cl. 343-873.000.

Brandt, Eva J.; and Asculai, Samuel S., to Monsanto Company. Radioimmunoassay of MIF. 4,299,814, Cl. 424-1.000.

Brannan, Jack D.: *See—*

Burns, Dallas D.; and Brannan, Jack D., 4,299,157, Cl. 89-1.50D.

Branson Ultrasonics Corporation: *See—*

Smith, Jeffrey C., 4,299,664, Cl. 202-170.000.

Brasen, Wallace R.; Gerhardt, Glenn E.; and Gregorovich, Basil V., to Du Pont de Nemours, E. I., and Company. High solids acrylic dispersion lacquer. 4,299,753, Cl. 260-31.600.

Brattle Instrument Corporation: *See—*

Epstein, Paul; Ballas, John S., Jr.; Van Horn, Joseph M.; and Mandler, John J., Jr., 4,299,234, Cl. 128-698.000.

Brault, Georges: *See—*

Popoff, Michel; Brochon, Marie-Jose; and Brault, Georges, 4,299,918, Cl. 435-30.000.

Braun Aktiengesellschaft: *See—*

Milutzki, Udo; Schotte, Dietwald; and Johnson, Jeffrey, 4,300,228, Cl. 369-216.000.

Braun, Phillip H.: *See—*

Clay, B. Jan; Braun, Phillip H.; and Vingris, Rudy, 4,299,665, Cl. 202-204.000.

Bredahl, Timothy D.: *See—*

Jones, David C.; and Bredahl, Timothy D., 4,299,874, Cl. 428-143.000.

Bremmer, Bart J.: *See—*

Garrou, Philip E.; Dubois, Robert A.; and Bremmer, Bart J., 4,299,777, Cl. 260-465.600.

Brenholt, David L., to Donaldson Company, Inc. Air inducer and backwasher for an air cleaner. 4,299,604, Cl. 55-303.000.

Brennan, Michael E., to Texaco Inc. Method of making N-(2-methoxyethyl)morpholine. 4,299,956, Cl. 544-177.000.

Brennan, Michael E., to Texaco Inc. Method of making N-(2-methoxyethyl)morpholine. 4,299,957, Cl. 544-177.000.

Brennfleck, Karl: *See—*

Dietrich, Manfred; Wuhl, Helmut; Fitzer, Erich; Brennfleck, Karl; and Kehr, Dietrich, 4,299,861, Cl. 427-62.000.

Bretts, Gerald R.: *See—*

Sellers, Gregory J.; Durand, Kevin J.; and Bretts, Gerald R., 4,300,180, Cl. 360-130.330.

Brewer, William R.; and de Jong, Hamilton C., to de Jong, Hamilton C. Wheeled carrier for hand luggage and the like. 4,299,403, Cl. 280-47.290.

Brewin, John D.: *See—*

Bickerstaff, Kenneth; and Brewin, John D., 4,299,018, Cl. 29-129.000.

Bridgestone Tire Company Limited: *See—*

Matsuda, Akira; Goshima, Norio; Yasuda, Shigeo; Iwasaki, Motoaki; and Nishino, Hiroshi, 4,300,118, Cl. 340-58.000.

Muramatsu, Tateo; and Kurihara, Mamoru, 4,299,514, Cl. 405-115.000.

Brite, Alan D. Method of insecticide application. 4,299,258, Cl. 141-1.000.

British Industrial Plastics Limited: *See—*

Ogden, Dennis H., 4,299,925, Cl. 521-188.000.

British Petroleum Company Limited, The: *See—*

Ball, William J.; Palmer, Keith W.; and Stewart, David G., 4,299,732, Cl. 252-455.00R.

Brittain, Austin: *See—*

Thawley, Clive S.; Graham, Kenneth; and Brittain, Austin, 4,300,052, Cl. 250-453.000.

Brochon, Marie-Jose: *See—*

Popoff, Michel; Brochon, Marie-Jose; and Brault, Georges, 4,299,918, Cl. 435-30.000.

Brockett, Bruce W., to Appleton Papers Inc. Pressure-sensitive record material. 4,299,411, Cl. 282-27.500.

Brockman, George T.; Garavalia, Thomas A.; and Kabat, Richard W., to Trane Company, The. Fan inlet guide vane assembly. 4,299,535, Cl. 415-160.000.

Brodeur, Lester R.: *See—*

Wurst, William C.; Mercer, William R.; and Brodeur, Lester R., 4,300,139, Cl. 343-103.000.

Brodrene Gram AS: *See—*

Gram, Hans, 4,299,075, Cl. 53-550.000.

Brogan, Stephen M.: *See—*

Withers, John A.; Sykes, Alec; and Brogan, Stephen M., 4,299,405, Cl. 280-759.000.

Broggi, Renato: *See—*

Falciani, Marco; and Broggi, Renato, 4,299,955, Cl. 544-30.000.

Broniewski, Bogdan M. Method of concentrating alkali metal hydroxide in hybrid cells having cation selective diffusion barriers. 4,299,673, Cl. 204-98.000.

Bronnenhuber, Rene. Fused electric plug. 4,300,113, Cl. 337-187.000.

Brother Kogyo Kabushiki Kaisha: *See—*

Watanabe, Tomoyoshi; Nakai, Toshio; Kuzuya, Susumu; Onoda, Hiroshi; Asai, Akira; Iwase, Takayuki; and Nakamura, Kazuo, 4,299,503, Cl. 400-161.500.

Brouwer, Frans, to Harper-Wyman Company. Fuel burner control circuit. 4,299,557, Cl. 431-71.000.

Brown, Alfred; Kudchadker, Mohan V.; Varnon, James E.; and Whittington, Lawrence E., to Texaco Inc. High sweep efficiency enhanced oil recovery process. 4,299,284, Cl. 166-245.000.

Brown, Harold B. Applicator. 4,299,005, Cl. 15-244.00A.

Brown, James R., to Beckman Instruments, Inc. Method and means for operating logarithmic circuits. 4,300,203, Cl. 364-577.000.

Brown, Rodney A.: *See—*
Brown, Roger C.; Brown, Rodney A.; and O'Connor, Stephen E., 4,299,832, Cl. 424-253.000.
Brown, Roger C.; Brown, Rodney A.; and O'Connor, Stephen E., to Fisons Limited. Substituted theophylline compounds. 4,299,832, Cl. 424-253.000.
BRS, Inc.: *See—*
Epple, Franz, 4,299,038, Cl. 36-67.00D.
Bruchmann, Heinz-Dieter: *See—*
Ibach, Harald; Froitzheim, Hermann; Bruchmann, Heinz-Dieter; and Lehwald, Sieghard, 4,300,045, Cl. 250-305.000.
Brucker, Rainer: *See—*
Sommer, August; and Brucker, Rainer, 4,299,730, Cl. 252-435.000.
Bruder, John F., to Quadri Corporation. Circuitry for reducing parasitic coupling in core memory. 4,300,214, Cl. 365-196.000.
Bruning, Paul; and Monkenbusch, Alfons, to Westfalia Separator AG. Drive for a continuously operating screw ejection centrifugal separator. 4,299,353, Cl. 233-7.000.
Brusky, Phyllis L.: *See—*
Daniel, Chelliah; and Brusky, Phyllis L., 4,299,980, Cl. 562-599.000.
Bryan, Paul J., to Du Pont de Nemours, E. I., and Company. Nonelectric delay initiator. 4,299,167, Cl. 102-202.300.
Bryant, Robert S., II, to National Gypsum Company. Cyclone processor and separator. 4,299,563, Cl. 432-58.000.
Buchheit, Dieter H., to Werner & Pfleiderer. Throttle device for a twin-shafted screw machine. 4,299,499, Cl. 366-85.000.
Buckelew, Arthur L. Aircraft visual collision and avoidance device. 4,299,442, Cl. 350-97.000.
Buckley, James W.: *See—*
Behrens, James D.; and Buckley, James W., 4,299,209, Cl. 128-87.00B.
Budapesti Muszaki Egyetem: *See—*
Tungler, Antal; Mathe, Tibor; Petro, Jozsef; and Bende, Zoltan, 4,299,992, Cl. 568-587.000.
Bull, David W., to Nartron Corporation. Electrical switch. 4,300,026, Cl. 200-153.00J.
Bullock, David C.: *See—*
Fontana, Robert E., Jr.; Bullock, David C.; Singh, Shalendra K.; and Bush, John M., 4,299,680, Cl. 204-192.00E.
Boluschek, Bruno; Magerli, Walter; and Muller, Erich, to H. Heer & Co. Supporting structure for multicable-containing elongated tray. 4,299,362, Cl. 248-49.000.
Bumgardner, Harry M., Jr.: *See—*
Dance, William E.; and Bumgardner, Harry M., Jr., 4,300,054, Cl. 376-190.000.
Buracchi, Livio: *See—*
Giobbio, Vincenzo; Ornato, Giorgio; and Buracchi, Livio, 4,299,962, Cl. 544-408.000.
Burdette, Stephen D.: *See—*
Hakes, Gary A.; Shook, Norma G.; Cackley, George W.; Burdette, Stephen D.; and Morris, Hugh C., 4,299,300, Cl. 180-6.200.
Burkacki, Roman J.: *See—*
Segretto, Bernard A.; and Burkacki, Roman J., 4,300,017, Cl. 174-36.000.
Burke, William J.: *See—*
Bell, Alan E.; Bartolini, Robert A.; Bloom, Allen; and Burke, William J., 4,300,143, Cl. 346-135.100.
Burkle, Stephen E.; Deutsch, Albert S.; and Piller, Robert S., to Polychrome Corporation. Storage stable photosensitive diazo lithographic printing plates. 4,299,907, Cl. 430-175.000.
Burmakin, Viktor M.: *See—*
Azbukin, Vladimir O.; Balandin, Jury F.; Gorynin, Igor V.; Gluskin, Lev Y.; Zvezdin, Jury I.; Ignatenko, Alexandr G.; Krasnov, Alexandr N.; Melekhov, Rostislav K.; Osipova, Inna S.; Pavlov, Valery N.; Khokhlov, Alexandr A.; Stepanov, Ivan A.; Anfimov, Alexandr F.; Ardentov, Vasily V.; Burmakin, Viktor M.; Ignatov, Viktor A.; Rokhlin, Eduard A.; and Zhitkov, Vladimir V., 4,299,623, Cl. 75-128.00R.
Burnham, William W.: *See—*
Morgenfruh, Rudolph A.; and Burnham, William W., 4,300,158, Cl. 358-80.000.
Burns, Bernard. Curtain rail. 4,299,008, Cl. 16-95.00D.
Burns, Dallas D.; and Brannan, Jack D., to United States of America, Navy. Controlled tension device. 4,299,157, Cl. 89-1.50D.
Burroughs Wellcome Co.: *See—*
Rideout, Janet L.; Krenitsky, Thomas A.; and Elion, Gertrude B., 4,299,823, Cl. 424-180.000.
Rideout, Janet L.; Krenitsky, Thomas A.; and Elion, Gertrude B., 4,299,824, Cl. 424-180.000.
Burstein, Albert H.; and Insall, John N., to New York Society for the Relief of the Ruptured and Crippled. Posteriorly stabilized total knee joint prosthesis. 4,298,992, Cl. 3-1.911.
Burton, Charles A., to Rexham Corporation. Cutting mechanism for a packaging machine. 4,299,151, Cl. 83-300.000.
Burton, James A., to Hydril Company. Pulsation dampener. 4,299,253, Cl. 138-30.000.
Burton, John S., to Autologic, Inc. Self threading phototypesetter transport system. 4,299,458, Cl. 354-6.000.
Busacca, Guido; and Muratore, Antonio, to Societa Italiana Telecomunicazioni Siemens S.p.A. Two-cavity klystron oscillator. 4,300,105, Cl. 331-83.000.
Busch, Lloyd E.: *See—*
Myers, George D.; and Busch, Lloyd E., 4,299,687, Cl. 208-113.000.
Bush, John M.: *See—*
Fontana, Robert E., Jr.; Bullock, David C.; Singh, Shalendra K.; and Bush, John M., 4,299,680, Cl. 204-192.00E.
Butler, John M., III, to Westinghouse Electric Corp. Leakage measuring apparatus for a gas-cooled, liquid-cooled, dynamoelectric machine. 4,300,066, Cl. 310-53.000.
C & H Printing: *See—*
Nichols, Steven F.; and Lulay, Lawrence O., 4,299,165, Cl. 101-150.000.
C. W. Cole & Company, Inc.: *See—*
Wakamatsu, Jack K., 4,300,185, Cl. 362-33.000.
Cackley, George W.: *See—*
Hakes, Gary A.; Shook, Norma G.; Cackley, George W.; Burdette, Stephen D.; and Morris, Hugh C., 4,299,300, Cl. 180-6.200.
Cadena, Edward R.: *See—*
Kruka, Vitold R.; Berni, Albert J.; Park, Lawrence D., Jr.; and Cadena, Edward R., 4,300,218, Cl. 367-165.000.
Cahill, Richard F.; and Udd, Eric, to McDonnell Douglas Corporation. Phase nulling optical gyro. 4,299,490, Cl. 356-350.000.
Cain, David E.: *See—*
Gau, Gerald S.; and Cain, David E., 4,299,118, Cl. 73-59.000.
Calgon Corporation: *See—*
Chan, Marie S.; and Hunter, Wood E., 4,299,965, Cl. 548-257.000.
Wells, Bruce D., 4,299,805, Cl. 423-321.00R.
Calundann, Gordon W., to Celanese Corporation. Polyester of phenyl-4-hydroxybenzoic acid, aromatic diol, and aromatic diacid capable of forming an anisotropic melt. 4,299,756, Cl. 260-40.00R.
Campana, Robert J., to United States of America, Energy. Monitoring arrangement for vented nuclear fuel elements. 4,299,661, Cl. 376-251.000.
Campbell, Gerald A.: *See—*
Archie, William C., Jr.; and Campbell, Gerald A., 4,299,895, Cl. 430-17.000.
Campbell, Robert W., to Phillips Petroleum Co. Treating shaped arylene sulfide/sulfone polymer with organic liquid at elevated temperature. 4,299,951, Cl. 528-491.000.
Campbell, Steve, to Pipe Systems, Incorporated. Thermal energy storage device and method for making the same. 4,299,274, Cl. 165-104.170.
Canadian Patents & Dev. Limited: *See—*
Hastings-James, Richard; and Holbrook, George W., 4,300,022, Cl. 179-115.5DV.
Candlin, John P.; Wilson, Keith C.; and Pearce, Ronald, to Imperial Chemical Industries Limited. Supported arene complex olefin catalysis. 4,299,936, Cl. 526-119.000.
Canon Kabushiki Kaisha: *See—*
Ichikawa, Kiyomichi, 4,299,382, Cl. 271-287.000.
Ikemori, Keiji, 4,299,452, Cl. 350-426.000.
Kawamura, Masaharu; and Shigeta, Yoshihiro, 4,299,463, Cl. 354-127.000.
Kawatsura, Yoshihiro; Shimizu, Katsuichi; and Sakamaki, Hisashi, 4,299,476, Cl. 355-14.00C.
Minoura, Kazuo, 4,299,438, Cl. 350-6.600.
Mitsuhashi, Yasuo; Kiuchi, Masashi; Takasu, Yoshio; Fukumoto, Hiroshi; Hino, Takashi; and Uchiyama, Masaki, 4,299,900, Cl. 430-122.000.
Momiyama, Kikuo; and Kamata, Shigeru, 4,299,453, Cl. 350-426.000.
Shimizu, Seiichi, 4,299,470, Cl. 354-286.000.
Soma, Ikuo; Magome, Tamotu; and Matsumoto, Toru, 4,299,902, Cl. 430-125.000.
Suzuki, Ryoichi; Matsumoto, Seiichi; Amikura, Takashi; Tsunekawa, Tokuichi; and Uchiyama, Takashi, 4,299,462, Cl. 354-53.000.
Canron Inc.: *See—*
Miller, Kirk D.; Flood, John B.; Dimou, George; Kara, Frederick E.; and Amos, Richard W., 4,299,624, Cl. 75-130.00R.
Cardarelli, Nathan F., to Environmental Chemicals, Inc. Controlled release of trace nutrients. 4,299,613, Cl. 71-64.00F.
Cardinal Industries, Inc.: *See—*
Smith, William V., 4,299,059, Cl. 49-401.000.
Carey, Michael J. Boot appliance for improved traction and wear protection. 4,299,037, Cl. 36-7.600.
Carignan, Donald J.; and Lewis, William, to United States of America, Air Force. Containment and release device for fluids. 4,299,166, Cl. 102-501.000.
Carl Schenck AG: *See—*
Schonfeld, Harald; Hack, Heinrich; and Arras, Ludwig, 4,300,197, Cl. 364-508.000.
Carl Still GmbH & Co. KG, Firma: *See—*
Ostmann, August, 4,299,666, Cl. 202-267.00R.
Carl Zeiss-Stiftung: *See—*
Strombled, Gunnar, 4,299,439, Cl. 350-49.000.
Carley, Joseph C.: *See—*
Hoskinson, William R.; and Carley, Joseph C., 4,299,153, Cl. 84-1.100.
Carlin, Edward M., Jr.: *See—*
Benz, Bernard D.; Carlin, Edward M., Jr.; and Gross, Thomas D., 4,299,504, Cl. 400-208.000.
Carman, David N.: *See—*
Saffer, Gary M.; Rich, Hubert A.; Carman, David N.; and Fekete, Ferenc, 4,299,548, Cl. 425-173.000.
Carolus, David T.; and Edwards, Ralph W., to General Motors Corporation. Rotary support structure for a power antenna cable storage drum. 4,300,141, Cl. 343-903.000.

Carroll, John P.: *See—*
Adorno, Vincent C.; Fessenden, Elizabeth A.; Barr, Stephen R.; Gibson, Zebulon T., Jr.; and Carroll, John P., 4,299,683, Cl. 204-246.000.
Carrow, William W.; and Moulton, Joseph R., to United States of America, Army. Running lights simulator. 4,299,575, Cl. 434-11.000.
Carter, Ernest E., Jr.: *See—*
Baker, Eugene E.; and Carter, Ernest E., Jr., 4,299,397, Cl. 277-34.000.
Carter, William J.; and Eigenbrod, Lester K., to Union Carbide Corporation. Portable cryogenic liquid storage-gas supply system. 4,299,091, Cl. 62-50.000.
Carus Corporation: *See—*
Mein, Peter G.; and Reidies, Arno H., 4,299,735, Cl. 252-465.000.
Cassarino, A. Victor, to Robertshaw Controls Company. Defrost system. 4,299,095, Cl. 62-155.000.
Cassidy, Frederick; and Wootton, Gordon, to Beecham Group Limited. Oxy-alkylamino carboxylic esters. 4,299,970, Cl. 560-39.000.
Casson, Harold V.; Crabtree, Grant G.; Kindl, Bruno; and Noonan, Edward B., to Huron Chemicals Limited. Protection of substrates against corrosion. 4,299,869, Cl. 428-35.000.
Castonguay, Roger N.: *See—*
Rask, Eric H.; and Castonguay, Roger N., 4,300,027, Cl. 200-153.00V.
Cataldo, Thomas R. Silent wearable signalling device with tactile means to prevent false triggering. 4,300,129, Cl. 340-539.000.
Caterpillar Tractor Co.: *See—*
Becker, Danny J.; Satzler, Ronald L.; and Koch, Keith E., 4,299,396, Cl. 277-12.000.
Hakes, Gary A.; Shook, Norma G.; Cackley, George W.; Burdette, Stephen D.; and Morris, Hugh C., 4,299,300, Cl. 180-6.200.
Cavanagh, John R.: *See—*
Clingman, David L.; Cavanagh, John R.; Schechter, Berton; and Cross, Kenneth R., 4,299,865, Cl. 427-243.000.
Cavazza, Claudio. Guaiacol esters of mercaptopropionic acid derivatives, process for preparing same and therapeutical compositions comprising such esters. 4,299,842, Cl. 424-301.000.
Cavitron Corporation: *See—*
Enderby, Charles E., 4,299,229, Cl. 128-395.000.
Celanese Corporation: *See—*
Calundann, Gordon W., 4,299,756, Cl. 260-40.00R.
Lee, Ho-Lun, 4,299,825, Cl. 424-180.000.
Cervantes, Ramon H. Backplate for a detachable gun lock. 4,299,045, Cl. 42-1.00Y.
Cesarz, Michael R.; and Stobbe, Richard E., to Kearney & Trecker Corporation. Control circuit for A.C. induction motor. 4,300,086, Cl. 318-801.000.
Ceskoslovenska akademie ved: *See—*
Barta, Cestmir; Ctyroky, Jiri; Silvestrova, Iraida M.; and Pisarevskij, Jurij V., 4,299,448, Cl. 350-358.000.
Chakravarti, Satya N.; Heller, Lawrence G.; and Pricer, Wilbur D., to International Business Machines Corp. Calibrated sensing system. 4,300,210, Cl. 365-45.000.
Champseix, Alain A.; Gueremy, Claude G. A.; and Le Fur, Gerard R., to Pharmindustrie. 4-[(3-(4-Quinolyl)propyl])piperidines, their preparation and their use as medicines. 4,299,835, Cl. 424-258.000.
Chan, Eric P. P. Construction toy and container. 4,299,050, Cl. 46-11.000.
Chan, Ka-Kong; and Pawson, Beverly A., to Hoffmann-La Roche Inc. Fluorinated polyenes. 4,299,995, Cl. 568-649.000.
Chan, Kwok Y., to W. Haking Enterprises, Ltd. Retractable camera. 4,299,465, Cl. 354-145.000.
Chan, Marie S.; and Hunter, Wood E., to Calgon Corporation. Preparation of benzotriazole. 4,299,965, Cl. 548-257.000.
Chapman, Darwin, to Ciba-Geigy AG. Adjustable current lamphouse. 4,299,481, Cl. 355-69.000.
Charland, Terrence D.: *See—*
Knodt, Ruediger W.; Charland, Terrence D.; Hull, Charles J.; Hutton, James E.; Webb, John L.; and Yonovich, John R., 4,299,478, Cl. 355-3.00R.
Chastain, David L., Jr.: *See—*
Crews, Harold R.; Chastain, David L., Jr.; and Ledis, Stephen L., 4,299,726, Cl. 252-408.000.
Chatelain, Jean, to Rhone-Progil. Process for bulk polymerization. 4,299,935, Cl. 526-88.000.
Chauvet, Bernard: *See—*
Bergeron, William; and Chauvet, Bernard, 4,300,016, Cl. 174-35.00R.
Chavez, Ramon G.; and Polido, Rodolfo A. V. Sequential logical electronic circuit controlling the discharge of controllable semiconductors. 4,300,059, Cl. 307-261.000.
Chemie Linz Aktiengesellschaft: *See—*
Hutter, Josef; and Goller, Heinz, 4,299,634, Cl. 106-103.000.
Chemische Werke Huls Aktiengesellschaft: *See—*
Sommer, August; and Brucker, Rainer, 4,299,730, Cl. 252-435.000.
Chen, Mabel M. M.; and Sandler, Stanley R., to Pennwalt Corporation. Phosphorus derivatives of 1,3-diethanolurea. 4,299,782, Cl. 260-932.000.
Cheng, Paul J., to Phillips Petroleum Company. Carbon black production. 4,299,797, Cl. 422-112.000.
Chevron Research Company: *See—*
Magee, Philip S., 4,299,783, Cl. 260-948.000.
Chianelli, Russell R.: *See—*
Dines, Martin B.; and Chianelli, Russell R., 4,299,892, Cl. 429-194.000.
Chicago Bridge & Iron Company: *See—*
Andrepont, John S., 4,299,262, Cl. 141-387.000.
Chinoin Gyogyszer es Vegyeszeti Termekek Gyara Rt.: *See—*
Kovacs, Gabor; Szekely, Istvan; Lovasz nee Gaspar, Marianne; Soos, Rudolf; and Dukai, Joszef, 4,299,972, Cl. 560-124.000.
Chisso Engineering Co., Ltd.: *See—*
Hayashi, Kohtaro; Morihara, Ko; and Nakamura, Kohji, 4,299,793, Cl. 264-564.000.
Chiyoda Chemical Engineering & Construction Co., Ltd.: *See—*
Miyoshi, Hajime; Okabayashi, Ikuo; and Asanagi, Etsuo, 4,299,516, Cl. 405-266.000.
Chizhikov, Vladimir M.; Matskin, Leonid A.; Fokin, Mikhail N.; Timofeev, Boris P.; Tokar, Mark N.; Balayan, Ruben D.; Trubin, German A.; Melik-Shakhnazarov, Alexandr M.; Barabashov, Dmitry A.; Dmitriev, Vladimir A.; and Vakhlyaev, Sergei V. Method and apparatus for weight determination of the amount of a substance possessing fluidity quality. 4,300,202, Cl. 364-567.000.
Choe, Sunjeen. Method of making artificial eyelashes. 4,299,242, Cl. 132-53.000.
Chorvat, Robert J., to G. D. Searle & Co. 25-Alkylcholest-5-ene-3 β,22-diols and esters thereof. 4,299,774, Cl. 260-397.200.
Chrise, Donald K.: *See—*
Emmerich, Kenneth C.; and Chrise, Donald K., 4,299,510, Cl. 403-282.000.
Ciba-Geigy AG: *See—*
Chapman, Darwin, 4,299,481, Cl. 355-69.000.
Ciba-Geigy Corporation: *See—*
Desai, Nalin B., 4,299,959, Cl. 544-283.000.
Dingwall, John G.; Greuter, Hans; Martin, Pierre; Ackermann, Peter; and Gsell, Laurenz, 4,299,967, Cl. 549-65.000.
Green, George E.; and Irving, Edward, 4,299,938, Cl. 526-192.000.
Neher, Martin D., 4,299,413, Cl. 285-114.000.
Rody, Jean; and Rasberger, Michael, 4,299,926, Cl. 525-55.000.
Tlach, Hugo; Leifels, Klaus-Dieter; and Mischler, Werner, 4,299,654, Cl. 162-164.0EP.
Cihonski, John L., to El Paso Products Company. Production of ethylbenzene. 4,300,010, Cl. 585-434.000.
Circon Corporation: *See—*
Miller, Frederick A.; and Wooff, Edward A., Jr., 4,300,167, Cl. 358-210.000.
Ciszek, Theodore F.; and Schwuttke, Guenter H., to United States of America, Energy. Method and apparatus for drawing monocrystalline ribbon from a melt. 4,299,648, Cl. 156-608.000.
Citizen Watch Company Limited: *See—*
Fujita, Hiroo; Tsuzuki, Akira; and Morokawa, Shigeru, 4,300,137, Cl. 340-765.000.
Nitta, Tatsuo, 4,300,222, Cl. 368-37.000.
Clapper, Millard F. Filter cleaning system. 4,299,245, Cl. 134-140.000.
Clarion Co., Ltd.: *See—*
Tanaka, Kouichi; and Amazawa, Kiyoshi, 4,300,104, Cl. 330-280.000.
Clark, Roger J.; and Kennison, Robert E., to International Business Machines Corporation. Coating process mask. 4,299,866, Cl. 427-255.600.
Clark, Thomas W. Noise attenuating stethoscope. 4,299,303, Cl. 181-131.000.
Clavel, Raymond. Shift mechanism. 4,299,505, Cl. 400-258.000.
Clay, B. Jan; Braun, Phillip H.; and Vingris, Rudy, to DCI Corporation. Separation apparatus for immiscible liquids. 4,299,665, Cl. 202-204.000.
Clayman, Henry M. Posterior chamber intra-ocular transplant device. 4,298,994, Cl. 3-13.000.
Clayton Aniline Co., Ltd.: *See—*
Hildreth, John D., 4,299,779, Cl. 260-508.000.
Cleary, Sean J.; and Furlong, Noel L., to Institute for Industrial Research and Standards, The. Nut tapping machine. 4,299,001, Cl. 10-133.000.
Clemence, Francois; Deraedt, Roger; Allais, Andre; and Le Martret, Odile, to Roussel Uclaf. 2-Trifluoromethyl-3-quinoline carboxamides, analgesic and anti-inflammatory compositions and methods employing them. 4,299,831, Cl. 424-251.000.
Clevenger, Kyle D.: *See—*
Parks, Kenneth L.; Clevenger, Kyle D.; and McDonald, Daniel P., 4,299,804, Cl. 423-321.00R.
Climate Cycling Corporation: *See—*
McGregor, James M., 4,299,277, Cl. 165-48.00S.
Clingman, David L.; Cavanagh, John R.; Schechter, Berton; and Cross, Kenneth R., to General Motors Corporation. Abradable ceramic seal and method of making same. 4,299,865, Cl. 427-243.000.
Cochran, C. Norman; and Fitzgerald, Nancy M., to Aluminum Company of America. Energy efficient production of aluminum by carbothermic reduction of alumina. 4,299,619, Cl. 75-10.00R.
Coffman, Robert G. Lug loader. 4,299,525, Cl. 414-181.000.
Cohen, Georges; and Rojey, Alexandre, to Institut Francais du Petrole. Absorbers used in absorption heat pumps and refrigerators. 4,299,093, Cl. 62-101.000.
Cohen, Leonard A. Method and apparatus for measuring cost of physical activity. 4,299,235, Cl. 128-718.000.
Coignet S.A.: *See—*
Fongea, Bernard, 4,299,785, Cl. 261-111.000.
Colak, Sel, to North American Philips Corporation. Lateral double-diffused MOS transistor device. 4,300,150, Cl. 357-23.000.
Colich, John M., Sr. Adjustable curtain rod support. 4,299,369, Cl. 248-263.000.
Colla, Jeannine O., to Johnson Controls, Inc. Conformal coating for electrical circuit assemblies. 4,300,184, Cl. 361-397.000.

Collias, George J., to Kepros-Ganes Company. Ring and snap-on ring for preventing buckle of beer cans. 4,299,161, Cl. 99-369.000.
Collins, Basil C.; Bartholomew, Michael; and Perry, Roy H., to Metal Box Limited. Plotting device. 4,299,031, Cl. 33-18.00R.
Collins, Bragelin J. Collapsible shrimp trawl. 4,299,047, Cl. 43-9.000.
Collins, Josiah W., II. Two-piece controlled motion hinge coupler joint. 4,299,507, Cl. 403-116.000.
Colorlux a-s: *See—*
Rasmussen, Paul, 4,299,042, Cl. 40-571.000.
Columberg, Alfred, to Battelle Memorial Institute. Process for the polymerization of propylene. 4,299,937, Cl. 526-124.000.
Comet GmbH Pyrotechnik Apparatebau: *See—*
Dix, Ernst; Muller, Gerhard; Notzel, Hans; Walther, Willy; and Zahn, Detlef, 4,299,170, Cl. 102-355.000.
Commissariat a l'Energie Atomique: *See—*
Barbier, Daniel; Ittel, Jean-Michel; and Poujois, Robert, 4,300,048, Cl. 250-338.000.
Faugeras, Pierre; Fremeaux, Pierre; Henry, Edouard; Malaterre, Roger; and Ros, Pierre, 4,299,798, Cl. 422-281.000.
Compagnie Industrielle des Telecommunications Cit-Alcatel: *See—*
Bergeron, William; and Chauvet, Bernard, 4,300,016, Cl. 174-35.00R.
Concorde Manufacturing Company: *See—*
Resch, David; and Nanus, Gregory, 4,299,388, Cl. 273-143.00R.
Confalone, Pasquale N.; Pizzolato, Giacomo; and Uskokovic, Milan R., to Hoffmann-La Roche Inc. Novel thiophene compounds. 4,299,968, Cl. 549-68.000.
Confalonieri, Giovanni: *See—*
Piccardi, Paolo; Confalonieri, Giovanni; Da Col, Lino; and Ramella, Pier G., 4,299,837, Cl. 424-273.00B.
Consolidated Controls Corporation: *See—*
Reinicke, Robert H., 4,299,252, Cl. 137-625.500.
Container Corporation of America: *See—*
Gardner, Jeffrey M., 4,299,351, Cl. 229-42.000.
Conti, Dino; Minotti, Luigi; and Sacrini, Egeo, to Montedison S.p.A. Process for preparing mixtures of peroxides. 4,299,718, Cl. 252-186.000.
Continental Group, Inc., The: *See—*
Swaroop, Nareshwar, 4,299,553, Cl. 425-572.000.
Walter, John, 4,299,330, Cl. 220-288.000.
Control Data Corporation: *See—*
Jasmin, James L.; and Kruger, Lawrence M., 4,300,208, Cl. 364-900.000.
Convers, Charles C.: *See—*
Mayo, Alfred M.; and Convers, Charles C., 4,299,202, Cl. 126-441.000.
Coombes, Robert F., to Diagnostic Products Corp. Immunoassay of thyroxine in neonates using dried blood samples. 4,299,812, Cl. 424-1.000.
Copal Company Limited: *See—*
Kurosu, Tomio; and Okajima, Kouichi, 4,299,469, Cl. 354-268.000.
Copeland, Jerry T.; and Vince, Ernest S., to Copeland, Jerry T. Bicycle carrier rack for automobiles. 4,299,341, Cl. 224-42.03B.
Copeland, John A., III, to Bell Telephone Laboratories, Incorporated. Trap doped laser combined with photodetector. 4,300,107, Cl. 331-94.50H.
Coppa, Richard J.; Lim, James K.; Ostrowski, John C.; and Rodriguez, Marie T., to Polaroid Corporation. Exposure and flash fire control system. 4,299,461, Cl. 354-27.000.
Coran, Aubert Y.; and Patel, Raman, to Monsanto Company. Compatibilized polymer blends. 4,299,931, Cl. 525-95.000.
Corbett, Robert J., to Huck Manufacturing Company. Two piece fastener and installation tool. 4,299,519, Cl. 411-361.000.
Cordier, Andre; and de Metz-Noblat, Benoit, to Air Industrie. Device for washing a polluted gas and installation equipped with such a device. 4,299,602, Cl. 55-240.000.
Cormier, Abbe: *See—*
DeBetta, Joseph G., 4,299,034, Cl. 33-185.00R.
Cormier, Alan D.; Feil, Marvin; and Legg, Kenneth D., to Instrumentation Laboratory Inc. Blood gas control. 4,299,728, Cl. 252-408.000.
Cornils, Boy: *See—*
Tummes, Hans; Cornils, Boy; and Noeske, Heinz, 4,299,990, Cl. 568-454.000.
Cotsworth, John L. Solar collector. 4,299,204, Cl. 126-447.000.
Cottrell, John S.; and Powers, Peter J., to Lever Brothers Company. Detergent compositions. 4,299,716, Cl. 252-99.000.
Cottrell, John S.; and Powers, Peter J., to Lever Brothers Company. Detergent compositions. 4,299,717, Cl. 252-99.000.
Couleur, John F.; and Montee, Robert F., to Honeywell Information Systems Inc. Method and means for storing and accessing information in a shared access multiprogrammed data processing system. 4,300,192, Cl. 364-200.000.
Coulter Electronics, Inc.: *See—*
Crews, Harold R.; Chastain, David L., Jr.; and Ledis, Stephen L., 4,299,726, Cl. 252-408.000.
Covington, Cecil E.; and Martin, Ronnie L., to Textron Inc. Tail rotor blade. 4,299,540, Cl. 416-226.000.
Crabtree, Grant G.: *See—*
Casson, Harold V.; Crabtree, Grant G.; Kindl, Bruno; and Noonan, Edward B., 4,299,869, Cl. 428-35.000.
Crabtree, John D.: *See—*
Foose, Ralph G.; and Crabtree, John D., 4,300,075, Cl. 315-307.000.
Crews, Harold R.; Chastain, David L., Jr.; and Ledis, Stephen L., to Coulter Electronics, Inc. Process for preparing whole blood reference controls having long term stability, preconditioning diluent and media therefor. 4,299,726, Cl. 252-408.000.
Crisman, Thomas L.; Moore, Stanley R.; and Weaver, Harry R., to Freezesleeves of America, Inc. Refrigeratable beverage container holder. 4,299,100, Cl. 62-457.000.
Cronin, John C.; and Wilson, Walter M., to Gould Inc. Rotary switch for gas-insulated substations. 4,300,028, Cl. 200-155.00R.
Cronkrite, William E., to 3 Sigma Inc. Tape tab fastener for disposable diaper. 4,299,223, Cl. 128-287.000.
Cross, Carroll N. Method of making a hinged display mount. 4,299,643, Cl. 156-223.000.
Cross, Kenneth R.: *See—*
Clingman, David L.; Cavanagh, John R.; Schechter, Barton; and Cross, Kenneth R., 4,299,865, Cl. 427-243.000.
Cross, Peter E.: *See—*
Barnish, Ian T.; Cross, Peter E.; and Danilewicz, John C., 4,299,820, Cl. 424-177.000.
Crowley, John A. Orthodontic appliance. 4,299,568, Cl. 433-6.000.
Cruz, Miguel M. Elastic drip guard for paint brushes. 4,299,006, Cl. 15-248.00R.
Ctyroky, Jiri: *See—*
Barta, Cestmir; Ctyroky, Jiri; Silvestrova, Iraida M.; and Pisarevskij, Jurij V., 4,299,448, Cl. 350-358.000.
Cucinella, Salvatore, to Anic, S.p.A. Method of reducing organic compounds with mixed hydride alkoxy derivatives of aluminum and alkaline earth metals. 4,299,986, Cl. 568-8.000.
Culligan International Company: *See—*
Rak, Stanley F.; DeVale, Donald P.; and Rehfeldt, Roger, 4,299,698, Cl. 210-96.100.
Curati, Marino, Jr., to True Temper Corporation. Liquid containment and storage system for railroad track. 4,299,697, Cl. 210-532.100.
Cushman, William H., to Eastman Kodak Company. Method and apparatus for reducing the incidence of eye closures during photographing of a human subject. 4,299,464, Cl. 354-137.000.
Cutrufello, Paul F.: *See—*
Panzer, Hans P.; Rothenberg, Alan S.; and Cutrufello, Paul F., 4,299,939, Cl. 526-258.000.
Czuba, Leonard F.: *See—*
Bacchowski, David V.; Kwong, Peter C.; Bowerman, Harold H., Jr.; and Czuba, Leonard F., 4,299,256, Cl. 138-137.000.
Da Col, Lino: *See—*
Piccardi, Paolo; Confalonieri, Giovanni; Da Col, Lino; and Ramella, Pier G., 4,299,837, Cl. 424-273.00B.
Dahm, Manfred; Jabs, Gert; Koglin, Bernd; Schnoring, Hildegard; and Riecke, Kurt, to Bayer Aktiengesellschaft. Microcapsules and their preparation. 4,299,723, Cl. 252-316.000.
Daicel Chemical Industries, Ltd.: *See—*
Soejima, Shigeru; and Ohmori, Yasuji, 4,299,886, Cl. 428-412.000.
Daicel Ltd.: *See—*
Hashizume, Yoshio; Itoh, Masanori; Sakai, Yasumasa; and Kamita, Akiyosi, 4,299,748, Cl. 260-29.6RW.
Daimler-Benz Aktiengesellschaft: *See—*
Renz, Dieter; Schobbe, Hermann; and Loper, Bernd, 4,299,425, Cl. 301-9.0CN.
Dainippon Screen Seizo Kabushiki Kaisha: *See—*
Sakamoto, Takashi, 4,300,170, Cl. 358-293.000.
Dalton, Michael J.: *See—*
Weiss, Lee E.; and Dalton, Michael J., 4,299,239, Cl. 128-785.000.
Dance, William E.; and Bumgardner, Harry M., Jr., to Vought Corporation. Directionally positionable neutron beam. 4,300,054, Cl. 376-190.000.
Daniel, Chelliah; and Brusky, Phyllis L., to Ashland Oil, Inc. Catalytic oxydehydrogenation process. 4,299,980, Cl. 562-599.000.
Daniels, Phillip D. Tub surround kit and method of assembly. 4,299,064, Cl. 52-35.000.
Danilewicz, John C.: *See—*
Barnish, Ian T.; Cross, Peter E.; and Danilewicz, John C., 4,299,820, Cl. 424-177.000.
Datschefski, Arthur E., to Raco, Inc. Connector for non-metallic sheathed cable. 4,299,363, Cl. 248-56.000.
Datta, Pabitra, to RCA Corporation. Conductive molding composition and discs therefrom. 4,299,736, Cl. 252-506.000.
David Brown Tractors Limited: *See—*
Withers, John A.; Sykes, Alec; and Brogan, Stephen M., 4,299,405, Cl. 280-759.000.
Davini, Giorgio. Robot with light-weight, inertia-free programming device. 4,300,198, Cl. 364-513.000.
Davis, Allen: *See—*
Rea, Jesse R.; and Davis, Allen, 4,299,890, Cl. 429-124.000.
Dawson, John T., to Boeing Company, The. Steering sense reversing mechanism for guided vehicles. 4,299,172, Cl. 104-247.000.
Dayco Corporation: *See—*
Standley, Paul M., 4,299,588, Cl. 474-264.000.
DCI Corporation: *See—*
Clay, B. Jan; Braun, Phillip H.; and Vingris, Rudy, 4,299,665, Cl. 202-204.000.
De La Rue Giori S.A.: *See—*
Quinton, Brian M.; Quinci, Emanuel R.; and Harrison, Henry, deceased, 4,299,325, Cl. 209-553.000.
DEA Digital Electronic Automation S.p.A.: *See—*
Monticelli, Mario; and Barbero, Piero, 4,299,370, Cl. 248-278.000.
DeBetta, Joseph G., to Cormier, Abbe; and Nokland, Sigmund. Log sizer. 4,299,034, Cl. 33-185.00R.
DeCoster, David C.: *See—*
Tu, Hosheng; and DeCoster, David C., 4,299,688, Cl. 208-120.000.
De Filippis, Pietro; Salvatore, Amedeo; Trama, Luigi; and Notaro, Giuseppe, to Texas Instruments Incorporated. Method of assembling a motor starting relay. 4,299,026, Cl. 29-612.000.

DeFranco, Thomas P.; and Marino, Armando V., to Zenith Radio Corporation. Cathode ray tube neck cleansing-scavenging means and method. 4,299,016, Cl. 29-25.110.
DeHaven, William M., to Harrelson Rubber Company. Tire retreading apparatus. 4,299,647, Cl. 156-394.0FM.
de Jong, Hamilton C.: *See—*
Brewer, William R.; and de Jong, Hamilton C., 4,299,403, Cl. 280-47.290.
Delaere, Jacques: *See—*
Sahajpal, Ved K.; Delaere, Jacques; Kromolicki, Zigmunt K.; and Settels, Mattheus R., 4,299,885, Cl. 428-403.000.
Del Bagno, Anthony C., Sr., to James Howden America, Inc. Industrial heat pipe energy recovery package unit. 4,299,272, Cl. 165-66.000.
Delgado, Raul: *See—*
Delgado, Raul J., 4,299,390, Cl. 273-257.000.
Delgado, Raul J., to Delgado, Raul. Election board game with campaign promise markers. 4,299,390, Cl. 273-257.000.
Dellantonio, Ezio F., to Autovox S.p.A. Device for disabling the control of disengagement for the tuning knob, particularly for a keyboard car radio. 4,299,132, Cl. 74-10.330.
Delsman, Robert L.; and Thompson, Norman D., to Boeing Company, The. Wet clutch fluid flow deflector. 4,299,320, Cl. 192-113.00B.
de Macedo, Pedro Buarque: *See—*
Macedo, Pedro B.; Samanta, Mrinmay; and Simmons, Joseph H., 4,299,608, Cl. 65-3.100.
Demers, Harlan J., to Koppers Company, Inc. Connector and imperforate reinforcement plates in combination. 4,299,511, Cl. 403-282.000.
de Metz-Noblat, Benoit: *See—*
Cordier, Andre; and de Metz-Noblat, Benoit, 4,299,602, Cl. 55-240.000.
De Pasquale, Ralph J.; and Schuman, Paul D., to PCR, Incorporated. 2,4,5 Trifluoro pyrimidine and process for preparing. 4,299,961, Cl. 544-334.000.
Deraedt, Roger: *See—*
Clemence, Francois; Deraedt, Roger; Allais, Andre; and Le Martret, Odile, 4,299,831, Cl. 424-251.000.
Deric, J. Mark: *See—*
Bittar, Joseph; and Deric, J. Mark, 4,299,309, Cl. 187-29.00R.
Shung, Wu S.; and Deric, J. Mark, 4,299,308, Cl. 187-29.00R.
Derosier, Gregory S., to Trane Company, The. Refrigeration circuit for heat pump water heater and control therefor. 4,299,098, Cl. 62-238.600.
Deroyer, Patrick: *See—*
Bezard, Christian; and Deroyer, Patrick, 4,299,703, Cl. 210-512.100.
Desai, Nalin B., to Ciba-Geigy Corporation. Fluorescent pigments. 4,299,959, Cl. 544-283.000.
Desmoras, Jacques: *See—*
Savory, Brian; and Desmoras, Jacques, 4,299,617, Cl. 71-109.000.
DeSoto, Inc.: *See—*
Murphy, Edward J., 4,299,979, Cl. 562-561.000.
De Stefanis, Vincent A.; and Turner, Earl W., to International Telephone and Telegraph Corporation. Modified enzyme system to inhibit bread firming method for preparing same and use of same in bread and other bakery products. 4,299,848, Cl. 426-20.000.
Deutsch, Albert S.: *See—*
Burkle, Stephen E.; Deutsch, Albert S.; and Piller, Robert S., 4,299,907, Cl. 430-175.000.
Deutsche Gold- und Silber Scheideanstalt vormals Roessler: *See—*
Wehle, Volker; Rupilius, Wolfgang; Reiffert, Jurgen; and Rogall, Gabriele, 4,299,725, Cl. 252-389.00A.
Deutschmann, Herbert, to Motoren-und- Turbinen-Union Friedrichshafen GmbH. Internal combustion engine with at least two exhaust gas turbochargers. 4,299,090, Cl. 60-612.000.
DeVale, Donald P.: *See—*
Rak, Stanley F.; DeVale, Donald P.; and Rehfeldt, Roger, 4,299,698, Cl. 210-96.100.
De Young, Russell J.: *See—*
United States of America, National Aeronautics and Space Administration; Hohl, Frank; and De Young, Russell J., 4,300,106, Cl. 331-94.50C.
Diagnostic Information, Inc.: *See—*
Wang, Shih-Ping, 4,300,046, Cl. 250-323.000.
Diagnostic Products Corp.: *See—*
Coombes, Robert F., 4,299,812, Cl. 424-1.000.
Dias, Francisco J.: *See—*
Luhleich, Hartmut; Pflaum, Peter; Dias, Francisco J.; Nauomidis, Aristides; Schirbach, Arno; and Nickel, Hubertus, 4,299,881, Cl. 428-308.000.
Dicke, Curtis J.: *See—*
Mihalich, Stephen K.; and Dicke, Curtis J., 4,300,061, Cl. 307-297.000.
Dickens, Robert E. Folding beverage can container. 4,299,324, Cl. 206-170.000.
Dickerson, Theodore. Flow characteristics of synthetic iron oxide. 4,299,635, Cl. 106-308.00B.
Dickey Manufacturing Company: *See—*
McClure, Kenneth R., 4,299,417, Cl. 292-320.000.
Diddens, Paul A.; and Humphrey, Robert E., to Honeywell Inc. Video coupling system. 4,300,074, Cl. 315-401.000.
Dieckman, Harry E.: *See—*
Kinley, John C.; Dieckman, Harry E.; and Anderson, Clifford E., 4,299,033, Cl. 33-178.00F.
Diederen, Willi: *See—*
Austel, Volkhard; Kutter, Eberhard; Heider, Joachim; and Diederen, Willi, 4,299,834, Cl. 424-253.000.
Diehl GmbH & Co.: *See—*
Meisner, Alfred, 4,300,087, Cl. 320-2.000.
Weidner, Peter; and Stutzle, Dietmar, 4,299,169, Cl. 102-210.000.
Dienst, Manfred: *See—*
Dropczynski, Hartmut; and Dienst, Manfred, 4,299,358, Cl. 242-55.000.
Diesel Kiki Company, Ltd.: *See—*
Shibuya, Tsunenori, 4,299,543, Cl. 417-269.000.
Dietrich, Manfred; Wuhl, Helmut; Fitzer, Erich; Brennfleck, Karl; and Kehr, Dietrich, to Kernforschungszentrum Karlsruhe Gesellschaft mit beschrankter Haftung. Process for the production of a flexible superconductor. 4,299,861, Cl. 427-62.000.
Dietrich, Ralph N.; Howell, Stephen L.; and Robinson, John W., to Kimball International, Inc. Electronic rhythm generator. 4,299,154, Cl. 84-1.030.
DiGiacomo, Peter M.; and Dines, Martin B., to Occidental Research Corporation. Nonaqueous preparation of layered or amorphous organometallic inorganic polymers. 4,299,943, Cl. 528-9.000.
Dikeman, Richard: *See—*
Marcus, Frederick; Dikeman, Richard; and Wiggins, Allan A., Jr., 4,299,015, Cl. 28-221.000.
Dimarco, Bernard; and Kralik, Andrew J., to Gould Inc. Handle blocking means for circuit breaker. 4,300,030, Cl. 200-42.00T.
Dimou, George: *See—*
Miller, Kirk D.; Flood, John B.; Dimou, George; Kara, Frederick E.; and Amos, Richard W., 4,299,624, Cl. 75-130.00R.
Dines, Martin B.; and Chianelli, Russell R., to Exxon Research & Engineering Co. Amorphous and sheet dichalcogenides of Group IVb, Vb, molybdenum and tungsten. 4,299,892, Cl. 429-194.000.
Dines, Martin B.: *See—*
DiGiacomo, Peter M.; and Dines, Martin B., 4,299,943, Cl. 528-9.000.
Dingwall, John G.; Greuter, Hans; Martin, Pierre; Ackermann, Peter; and Gsell, Laurenz, to Ciba-Geigy Corporation. Process for producing optically active 2-(2,2-dihalogenovinyl)-cyclopropane-1-carboxylic acids substituted in the 3-position, and derivatives thereof, as well as novel 4-(2,2,2-trihalogenoethyl)-cyclobutane-1-sulfonic acid salts. 4,299,967, Cl. 549-65.000.
Direct Reduction Corporation, The: *See—*
Goodell, Thomas W., 4,299,694, Cl. 209-139.00R.
Director-General of Agency of Industrial Science and Technology: *See—*
Suzuki, Hirosbi; Narasaki, Hideo; Seki, Sigeru; Endo, Kiichi; and Hirose, Takao, 4,299,738, Cl. 252-541.000.
Disbrow, John R.: *See—*
Belleson, James G.; Disbrow, John R.; and Eiselen, Everett T., 4,300,206, Cl. 364-900.000.
Dix, Ernst; Muller, Gerhard; Notzel, Hans; Walther, Willy; and Zahn, Detlef, to Comet GmbH Pyrotechnik Apparatebau. Device for simulating hits on armored vehicles and similar targets. 4,299,170, Cl. 102-355.000.
Dmitriev, Vladimir A.: *See—*
Chizhikov, Vladimir M.; Matskin, Leonid A.; Fokin, Mikhail N.; Timofeev, Boris P.; Tokar, Mark N.; Balayan, Ruben D.; Trubin, German A.; Melik-Shakhnazarov, Alexandr M.; Barabashov, Dmitry A.; Dmitriev, Vladimir A.; and Vakhlyaev, Sergei V., 4,300,202, Cl. 364-567.000.
Dobfar S.p.A.: *See—*
Falciani, Marco; and Broggi, Renato, 4,299,955, Cl. 544-30.000.
Dr. C. Otto & Comp. G.m.b.H.: *See—*
Struck, Carl-Heinz; and Schumacher, Ralf, 4,299,356, Cl. 239-558.000.
Dr. Ing. h.c.F. Porsche AG: *See—*
Turi, Julius; and Stotz, Erich, 4,299,136, Cl. 74-478.500.
Dodds, Alan R.; and Imai, Tamotsu, to UOP Inc. Preparation of ketones. 4,299,989, Cl. 568-397.000.
Doe, Reginald A., to Westland Aircraft Limited. Helicopter airspeed indicating system. 4,300,200, Cl. 364-565.000.
Doehnert, Donald F., to Permacel. Aqueous release coating compositions. 4,299,741, Cl. 260-17.4CL.
Dolhyj, Serge R.; and Velenyi, Louis J., to Standard Oil Company, The. Process for producing benzo-phenone from 1,1-diphenylethane (or 1,1-diphenylethylene) using antimonate catalysts. 4,299,987, Cl. 568-321.000.
Dolhyj, Serge R.: *See—*
Velenyi, Louis J.; Uebele, Curtie E.; and Dolhyj, Serge R., 4,299,991, Cl. 568-573.000.
Dombroski, John R., to Eastman Kodak Company. Molding compositions. 4,299,927, Cl. 525-64.000.
Donaldson Company, Inc.: *See—*
Brenholt, David L., 4,299,604, Cl. 55-303.000.
Donley, William B., to General Motors Corporation. Etching windows in thick dielectric coatings overlying semiconductor device surfaces. 4,299,862, Cl. 427-89.000.
Dopp, Robert B., to Upjohn Company, The. Method and apparatus for detecting and measuring a gas. 4,299,593, Cl. 23-232.00R.
Dorman, Frank D., to University of Minnesota, The Regents of the. Implantable drug infusion regulator. 4,299,220, Cl. 128-260.000.
Dorman, Hugh H., to Patco. Swivel fitting and method for making. 4,299,415, Cl. 285-281.000.
Dossin, Jacques, to Automobiles Peugeot; and Societe Anonyme Automobiles Citroen. Device for guiding a lateral part of a fender on an automobile vehicle. 4,299,418, Cl. 293-126.000.
Dougherty, Herbert W.; and Schlosberg, Richard H., to Exxon Research & Engineering Co. Removal of phenols from phenol-containing streams. 4,299,691, Cl. 208-263.000.

Dougherty, Lawrence W.; and Palac, Kazimir, to Zenith Radio Corporation. Four-corner shadow mask suspension system for television cathode ray tubes. 4,300,071, Cl. 313-407.000.
Dow Chemical Company, The: See—
Garrou, Philip E.; Dubois, Robert A.; and Bremmer, Bart J., 4,299,777, Cl. 260-465.600.
Pingel, Ronald J.; Onifer, Geofrey P.; and Spencer, Thomas L., 4,299,952, Cl. 528-500.000.
Dowdy, Felix A. Sonic gas detector for rotary drilling system. 4,299,123, Cl. 73-155.000.
Downing, Charles R.; and Kaufman, Harold A., to Mobil Oil Corporation. Method for increasing soybean yield. 4,299,618, Cl. 71-121.000.
Doyel, Arthur T., Jr.: See—
Whitfield, Fred J.; and Doyel, Arthur T., Jr., 4,299,715, Cl. 252-74.000.
Doynow, David. Extraction splint. 4,299,211, Cl. 128-89.00R.
Dresser Industries, Inc.: See—
Smith, John W., 4,299,526, Cl. 414-392.000.
Dropczynski, Hartmut; and Dienst, Manfred, to Jagenberg-Werke A.G. Method and apparatus for the automatic sidewise insertion of cores in winding machines. 4,299,358, Cl. 242-55.000.
Dubois, Robert A.: See—
Garrou, Philip E.; Dubois, Robert A.; and Bremmer, Bart J., 4,299,777, Cl. 260-465.600.
Dubreux, Bernard, to PCUK Produits Chimiques Ugine Kuhlmann. Process for the preparation of 3-cyano-3,5,5-trimethylcyclohexanone. 4,299,775, Cl. 260-464.000.
Ducommun, Pierre-Francois, to Bolex International SA. Camera. 4,299,457, Cl. 352-140.000.
Duftschmid, Klaus: See—
Hizo, Jozsef; and Duftschmid, Klaus, 4,300,050, Cl. 250-374.000.
Duga, Robert J., to Emhart Industries, Inc. Neck ring assembly. 4,299,371, Cl. 249-68.000.
Dugas, Roger A., to Hewlett-Packard Company. Optical valve position sensing. 4,299,251, Cl. 137-556.000.
Dukai, Joszef: See—
Kovacs, Gabor; Szekely, Istvan; Lovasz nee Gaspar, Marianne; Soos, Rudolf; and Dukai, Joszef, 4,299,972, Cl. 560-124.000.
Dunlop Limited: See—
Williams, Arthur R., 4,299,264, Cl. 152-209.00R.
Dunphy, Daniel L. S.; and Kearney, Mark B., to General Motors Corporation. Multiple input window detector. 4,300,063, Cl. 307-355.000.
Du Pont de Nemours, E. I., and Company: See—
Apotheker, David, 4,299,958, Cl. 544-221.000.
Armour, Albert G., 4,299,752, Cl. 260-31.40R.
Brasen, Wallace R.; Gerhardt, Glenn E.; and Gregorovich, Basil V., 4,299,753, Cl. 260-31.600.
Bryan, Paul J., 4,299,167, Cl. 102-202.300.
England, David C.; and Howard, Edward G., Jr., 4,299,949, Cl. 528-220.000.
Fuchs, Julius J., 4,299,960, Cl. 544-320.000.
Komodromos, Nicos M., 4,299,497, Cl. 356-448.000.
Ross, John A., 4,299,788, Cl. 264-85.000.
Sauerbrunn, Robert D., 4,299,498, Cl. 366-76.000.
Dupre, Jean; and Hann, William M., to Rohm and Haas Company. Drilling fluid and method. 4,299,710, Cl. 252-8.50A.
Duracell International Inc.: See—
Kaye, Gordon E., 4,299,435, Cl. 339-150.00F.
Rea, Jesse R.; and Davis, Allen, 4,299,890, Cl. 429-124.000.
Durand, Kevin J.: See—
Sellers, Gregory J.; Durand, Kevin J.; and Bretts, Gerald R., 4,300,180, Cl. 360-130.330.
Durlach, Jean P., to La Cooperation Pharmaceutique Francaise. Tryptophan derivatives having an increased effect on the central nervous system. 4,299,838, Cl. 424-274.000.
Dutkiewicz, Ryszard K. Panel gas filter for limestone dust. 4,299,598, Cl. 55-99.000.
Dworschak, Josef, to Linde Aktiengesellschaft. Steam-generating process. 4,299,193, Cl. 122-7.00R.
Dynaflex: See—
Garrett, Raymond K.; and Fifield, John G., 4,299,701, Cl. 210-222.000.
Dyneer Corporation: See—
Kraft, Derald H.; and Rinaldo, Daniel M., 4,299,583, Cl. 474-110.000.
Sproul, Nolte V., 4,299,584, Cl. 474-135.000.
Dziewulski, Ted; and Kay, Arthur H., to Phillips Petroleum Company. Plant container. 4,299,055, Cl. 47-66.000.
E. R. Squibb & Sons, Inc.: See—
Wang, Yu-chang J.; and Wong, Thomas M., 4,299,828, Cl. 424-238.000.
E-Systems, Inc.: See—
Preston, William C.; and Still, Michael W., 4,299,379, Cl. 271-3.100.
Eastern Company, The: See—
Yates, Jan B.; and Bartilson, Benjamin M., 4,299,515, Cl. 405-239.000.
Eastman Kodak Company: See—
Archie, William C., Jr.; and Campbell, Gerald A., 4,299,895, Cl. 430-17.000.
Boggs, Brenda J., 4,299,930, Cl. 525-74.000.
Cushman, William H., 4,299,464, Cl. 354-137.000.
Dombroski, John R., 4,299,927, Cl. 525-64.000.
Godfrey, Darryl A., 4,299,745, Cl. 260-28.5AV.
Harvey, Donald M., 4,299,466, Cl. 354-173.000.
Klose, Thomas R.; and Webster, Frank G., 4,299,894, Cl. 430-9.000.
McConnell, Richard L.; Trotter, Jimmy R.; and Sublett, Bobby J., 4,299,933, Cl. 525-170.000.
Petke, Frederick D.; and McConnell, Richard L., 4,299,934, Cl. 525-173.000.
Eaton Corporation: See—
Paciorek, Raymond M., 4,300,134, Cl. 340-685.000.
Surman, James J., 4,300,120, Cl. 340-58.000.
Ebara Corporation: See—
Masuno, Kouji; Nakayama, Junji; Mizoguchi, Yukio; and Kaneko, Mitsuyoshi, 4,299,652, Cl. 162-30.00K.
Ebauches Electroniques SA: See—
Maire, Bernard, 4,300,223, Cl. 368-85.000.
Eberle, Siegfried H.: See—
Holl, Wolfgang; Sester, Karl-Ekkehard; Eberle, Siegfried H.; and Sontheimer, Heinrich, 4,299,922, Cl. 521-26.000.
Ebert, Bernd: See—
Lassmann, Gunter; Ebert, Bernd; and Klimes, Norbert, 4,299,337, Cl. 222-135.000.
Eckelt, Michael: See—
Asbeck, Adolf; Eckelt, Michael; Erwied, Werner; Heyden, Rudi; and Petzold, Manfred, 4,299,975, Cl. 560-151.000.
Eckenhoff, James B., to ALZA Corporation. Self-contained suction pump. 4,299,222, Cl. 128-278.000.
Eden, Richard C., to Rockwell International Corporation. Schottky diode FET logic integrated circuit. 4,300,064, Cl. 307-446.000.
Edmonton Exchanger and Refinery Services Ltd.: See—
Seale, James B.; and Gusse, Henry, 4,299,531, Cl. 414-746.000.
Edwards, Douglas F.: See—
Roy, Richard H.; and Edwards, Douglas F., 4,299,134, Cl. 74-473.00R.
Edwards, Ralph W.: See—
Carolus, David T.; and Edwards, Ralph W., 4,300,141, Cl. 343-903.000.
Edwards, Thomas C.: See—
Shank, Wayne C.; and Edwards, Thomas C., 4,299,097, Cl. 62-229.000.
Ehlers, Klaus-Peter: See—
Schrodter, Klaus; Ehlers, Klaus-Peter; and Mulder, Roelof, 4,299,803, Cl. 423-308.000.
Ehrich, Hans-Jurgen; and Wahnelt, Jorg, to Schering Aktiengesellschaft. Bath and process for galvanic separation of palladium-nickel alloys. 4,299,672, Cl. 204-43.00N.
Eigenbrod, Lester K.: See—
Carter, William J.; and Eigenbrod, Lester K., 4,299,091, Cl. 62-30.000.
Eiselen, Everett T.: See—
Belleson, James G.; Disbrow, John R.; and Eiselen, Everett T., 4,300,206, Cl. 364-900.000.
Eisinger, Magdalena G., to Sloan-Kettering Institute for Cancer Research. Process for treating burn victims. 4,299,819, Cl. 424-95.000.
Eivers, Donald J.; and Kovacs, Eddie J., to Grumman Aerospace Corporation. Multiple matrix switching system. 4,300,207, Cl. 364-900.000.
Ejnar Jensen & Son A/S: See—
Jensen, Jorgen M., 4,299,521, Cl. 414-13.000.
Ekstrom, Thomas E.: See—
Rowen, William I.; Ekstrom, Thomas E.; and Rexford, Donald L., 4,299,088, Cl. 60-39.270.
El Paso Products Company: See—
Cihonski, John L., 4,300,010, Cl. 585-434.000.
Elektromanufaktur Zangenstein Hanauer GmbH & Co.: See—
Forster, Wolfgang, 4,299,159, Cl. 92-98.00R.
Eli Lilly and Company: See—
Abbott, Bernard J.; and Fukuda, David S., 4,299,762, Cl. 260-112.50R.
Abbott, Bernard J.; and Fukuda, David S., 4,299,763, Cl. 260-112.50R.
Beck, James R.; and Gajewski, Robert P., 4,299,614, Cl. 71-67.000.
Hamill, Robert L.; and Wild, Gene M., 4,299,953, Cl. 536-17.00R.
Spry, Douglas O., 4,299,954, Cl. 544-30.000.
Elion, Gertrude B.: See—
Rideout, Janet L.; Krenitsky, Thomas A.; and Elion, Gertrude B., 4,299,823, Cl. 424-180.000.
Rideout, Janet L.; Krenitsky, Thomas A.; and Elion, Gertrude B., 4,299,824, Cl. 424-180.000.
Elward, Thomas E.: See—
Skinner, Wilfred A.; Rosentreter, Ulrich; and Elward, Thomas E., 4,299,840, Cl. 424-274.000.
Emerson Electric Co.: See—
Hawkins, Harvey G., 4,299,306, Cl. 182-210.000.
Emhart Industries, Inc.: See—
Duga, Robert J., 4,299,371, Cl. 249-68.000.
EMI Limited: See—
Harrison, Colin G.; and Young, Ian R., 4,300,096, Cl. 324-309.000.
Emmerich, Kenneth C.; and Chrise, Donald K., to Fansteel Inc. Drill steel and method of fabrication. 4,299,510, Cl. 403-282.000.
Emmons, William D.; and Nyi, Kayson, to Rohm and Haas Company. Polymer concrete compositions, methods of application thereof, and polymerized products thereof. 4,299,761, Cl. 260-42.530.
Emmons, William D.; and Feely, Wayne E., to Rohm and Haas Company. Ambient hydrocurable coating and adhesives compositions. 4,299,867, Cl. 427-377.000.
Empire Enterprises, Inc.: See—
Renegar, Charles G., 4,299,187, Cl. 118-411.000.

Enderby, Charles E., to Cavitron Corporation. Method of observing the aim or effect of a laser beam on a target. 4,299,229, Cl. 128-395.000.
Endo, Kiichi: See—
Suzuki, Hiroshi; Narasaki, Hideo; Seki, Sigeru; Endo, Kiichi; and Hirose, Takao, 4,299,738, Cl. 252-541.000.
Endo, Koichi, to Konishiroku Photo Industry Co., Ltd. Electrophotographic copying machine using a thick sheet of small size as a transfer sheet. 4,299,473, Cl. 355-3.0SH.
Energy Equipment Company Limited, The: See—
Harman, Maurice, 4,299,562, Cl. 432-58.000.
Enga, Bernard E., to Johnson, Matthey & Co., Limited. Catalytic combustion. 4,299,192, Cl. 122-4.00D.
Engel, Christopher M., to Zenith Radio Corporation. Color demodulation and matrixing system. 4,300,154, Cl. 358-23.000.
England, David C.; and Howard, Edward G., Jr., to Du Pont de Nemours, E. I., and Company. Fluorinated 3-ketoglutaroyl halides and polymers therefrom. 4,299,949, Cl. 528-220.000.
Ennis, George T., to N/S Car Wash Enterprises, Inc. Vehicle washing apparatus for washing the front, sides and rear of a vehicle. 4,299,003, Cl. 15-53.0AB.
Enslen, Marc: See—
Philippossian, Georges; and Enslen, Marc, 4,299,833, Cl. 424-253.000.
Environmental Chemicals, Inc.: See—
Cardarelli, Nathan F., 4,299,613, Cl. 71-64.00F.
Envirotech Corporation: See—
Silvermetz, David; and Adams, George L., 4,299,114, Cl. 73-1.00H.
Epple, Franz, to BRS, Inc. Sole for athletic shoe. 4,299,038, Cl. 36-67.00D.
Epstein, Paul; Ballas, John S., Jr.; Van Horn, Joseph M.; and Mandler, John J., Jr., to Brattle Instrument Corporation. Fetal heart rate monitor apparatus and method for combining electrically and mechanically derived cardiographic signals. 4,299,234, Cl. 128-698.000.
ERCO Industries Limited: See—
Reeve, Douglas W., 4,299,653, Cl. 162-88.000.
Erickson, David E., to General Tire & Rubber Company, The. Rubber-brass adhesion improved through treatment of the metal with amino carboxylic acid or salt thereof. 4,299,640, Cl. 156-110.00C.
Erickson, John W., to Kobe, Inc. Centrifuge apparatus. 4,299,352, Cl. 233-3.000.
Eriksson, Gunnar V. Apparatus for damping noise from exhaust air outlets. 4,299,305, Cl. 181-230.000.
Ernst Reiner KG Feinmechanik und Apparatebau: See—
Wagner, Friedemann, 4,299,512, Cl. 403-357.000.
Erwied, Werner: See—
Asbeck, Adolf; Eckelt, Michael; Erwied, Werner; Heyden, Rudi; and Petzold, Manfred, 4,299,975, Cl. 560-151.000.
Esposito, Michael A.; and Princen, Henricus M., to Lever Brothers Company. Use of aluminum salts in laundry detergent formulations. 4,299,739, Cl. 252-545.000.
Etzel, John G.; and Munford, James A., to United States of America, National Aeronautics and Space Administration. Laser measuring system for incremental assemblies. 4,299,492, Cl. 356-386.000.
Evans, Frederick C. Interlinked variable-pitch blades for windmills and turbines. 4,299,537, Cl. 416-119.000.
EVG Entwicklungs-und Verwertungs-Gesellschaft m.b.H.: See—
Gott, Hans; Furndorfler, Peter; Kogl, Fred; Ritter, Klaus; and Ritter, Gerhard, 4,299,523, Cl. 414-55.000.
Exxon Research & Engineering Co.: See—
Dines, Martin B.; and Chianelli, Russell R., 4,299,892, Cl. 429-194.000.
Dougherty, Herbert W.; and Schlosberg, Richard H., 4,299,691, Cl. 208-263.000.
Ledford, Thomas H.; and Lerner, Howard, 4,299,811, Cl. 423-578.00R.
Liotta, Ronald, 4,299,684, Cl. 208-8.0LE.
Skopp, Alvin, 4,299,203, Cl. 126-443.000.
F. Jos. Lamb Company: See—
Koch, Richard L.; and VanDeberg, Walter H., 4,299,323, Cl. 198-774.000.
Facet Enterprises, Inc.: See—
Wiernicki, Michael V., 4,300,119, Cl. 340-58.000.
Facit Aktiebolag: See—
Harre, Kurt J. S., 4,299,502, Cl. 400-144.200.
Failing, Coleda J. Method for styling hair. 4,299,240, Cl. 132-7.000.
Fairchild, Lamar J. Mechanical transmission having reduced friction direct drive. 4,299,141, Cl. 74-785.000.
Fairgrieve, James M., to Sanders and Forster Limited. Accommodation units. 4,299,065, Cl. 52-79.700.
Falciani, Marco; and Broggi, Renato, to Dobfar S.p.A. Process for preparing derivatives of 7-amino-desacetoxy cephalosporanic acid. 4,299,955, Cl. 544-30.000.
Fannin, Loyd W.; Malpass, Dennis B.; and Sanchez, Ramiro, to Texas Alkyls, Inc. Organomagnesium solutions of low viscosity. 4,299,781, Cl. 260-665.00R.
Fansteel Inc.: See—
Emmerich, Kenneth C.; and Chrise, Donald K., 4,299,510, Cl. 403-282.000.
Fauck, Gerhard, to WABCO Fahrzeugbremsen GmbH. Adjusting arrangement for variable load valve device. 4,299,427, Cl. 303-22.00A.
Fauck, Gerhard, to WABCO Fahrzeugbremsen GmbH. Automatic load-dependent brake control device having wide range of pressure adjustment. 4,299,428, Cl. 303-22.00A.
Faugeras, Pierre; Fremeaux, Pierre; Henry, Edouard; Malaterre, Roger; and Ros, Pierre, to Commissariat a l'Energie Atomique. Apparatus for the treatment of solids by liquids. 4,299,798, Cl. 422-281.000.
Fayal, James E.; and Morone, Joseph A., III, to Greene Plastics Corporation. Molding of superplastic metals. 4,299,111, Cl. 72-342.000.
Feely, Wayne E.: See—
Emmons, William D.; and Feely, Wayne E., 4,299,867, Cl. 427-377.000.
Fehr, Werner: See—
Igel, Wolfgang; Freibichler, Franz; Fehr, Werner; and Pfeifer, Willi, 4,299,083, Cl. 57-18.000.
Feil, Marvin: See—
Cormier, Alan D.; Feil, Marvin; and Legg, Kenneth D., 4,299,728, Cl. 252-408.000.
Fekete, Ferenc: See—
Saffer, Gary M.; Rich, Hubert A.; Carman, David N.; and Fekete, Ferenc, 4,299,548, Cl. 425-173.000.
Ferris, Donald L.; and Ogle, Peter C., to United Technologies Corporation. Cross beam rotor. 4,299,538, Cl. 416-134.00A.
Fessenden, Elizabeth A.: See—
Adorno, Vincent C.; Fessenden, Elizabeth A.; Barr, Stephen R.; Gibson, Zebulon T., Jr.; and Carroll, John P., 4,299,683, Cl. 204-246.000.
Fichter, June C.: See—
Alex, James J.; and Fichter, June C., 4,299,471, Cl. 354-304.000.
Fields, Johnell; and Holten, Jessie. Educational object identification game. 4,299,580, Cl. 434-335.000.
Fifield, John G.: See—
Garrett, Raymond K.; and Fifield, John G., 4,299,701, Cl. 210-222.000.
Firestone Tire & Rubber Company, The: See—
Bethea, Tristram W.; and Futamura, Shingo, 4,299,993, Cl. 568-617.000.
Hergenrother, William L.; Schwarz, Richard A.; Ambrose, Richard J.; and Hayes, Robert A., 4,299,932, Cl. 525-130.000.
Fischli, Albert E.; and Szente, Andre, to Hoffmann-La Roche Inc. Benzodiazepine derivatives. 4,299,767, Cl. 260-293.30D.
Fischli, Heinz, to Sulzer Brothers Ltd. Heat exchanger, especially recuperator for high temperature reactors. 4,299,273, Cl. 165-78.000.
Fisons Limited: See—
Brown, Roger C.; Brown, Rodney A.; and O'Connor, Stephen E., 4,299,832, Cl. 424-253.000.
Geering, Quinton A., 4,299,841, Cl. 424-282.000.
Fitzer, Erich: See—
Dietrich, Manfred; Wuhl, Helmut; Fitzer, Erich; Brennfleck, Karl; and Kehr, Dietrich, 4,299,861, Cl. 427-62.000.
Fitzgerald, J. Vincent; Matusik, Frank J.; and Nelson, Donald W., to National Metal and Refining Company, Ltd. Incremental rotary viscometer. 4,299,119, Cl. 73-59.000.
Fitzgerald, Nancy M.: See—
Cochran, C. Norman; and Fitzgerald, Nancy M., 4,299,619, Cl. 75-10.00R.
Fletcher, Paul C.: See—
Soltan, Parviz; and Fletcher, Paul C., 4,299,447, Cl. 350-334.000.
Fletcher, Thomas A., to General Electric Company. Adjustable floodlight reflector. 4,300,187, Cl. 362-223.000.
Fletcher Wood Panels Limited: See—
Smart, Deane W., 4,299,877, Cl. 428-212.000.
Fleuret, Jacques P.: See—
Thery, Jean-Francois; Maitre, Henri; and Fleuret, Jacques P., 4,299,489, Cl. 356-336.000.
Flood, John B.: See—
Miller, Kirk D.; Flood, John B.; Dimou, George; Kara, Frederick E.; and Amos, Richard W., 4,299,624, Cl. 75-130.00R.
Flowers, Nancy: See—
Shvartsman, Vladimir A., 4,300,101, Cl. 330-149.000.
FMC Corporation: See—
Alm, Bernard D., 4,299,265, Cl. 157-1.100.
Hatch, Charles E., III, 4,299,776, Cl. 260-465.00D.
Talafuse, Larry J., 4,299,261, Cl. 141-387.000.
Ulch, Bryan D., 4,299,326, Cl. 209-564.000.
Foerster, Hubert: See—
Socbor, Josef; Horstmann, Winfried; and Foerster, Hubert, 4,300,172, Cl. 360-33.000.
Fokin, Mikhail N.: See—
Chizhikov, Vladimir M.; Matskin, Leonid A.; Fokin, Mikhail N.; Timofeev, Boris P.; Tokar, Mark N.; Balayan, Ruben D.; Trubin, German A.; Melik-Shakhnazarov, Alexandr M.; Barabashov, Dmitry A.; Dmitriev, Vladimir A.; and Vakhlyaev, Sergei V., 4,300,202, Cl. 364-567.000.
Fontana, Robert E., Jr.; Bullock, David C.; Singh, Shalendra K.; and Bush, John M., to Texas Instruments Incorporated. Method of fabricating magnetic bubble memory device having planar overlay pattern of magnetically soft material. 4,299,680, Cl. 204-192.00E.
Food Technology Products: See—
Glabe, Elmer F.; Anderson, Perry W.; and Laftsidis, Stergios, 4,299,854, Cl. 426-331.000.
Foose, Ralph G.; and Crabtree, John D., to Nuarc Company, Inc., The. AC Regulator system for quartz iodine lamps. 4,300,075, Cl. 315-307.000.
Foote, Hilton. Combination connector. 4,299,053, Cl. 47-52.000.
Ford Aerospace & Communications Corporation: See—
Kato, David S., 4,300,232, Cl. 370-100.000.
Forkey, Paul W.: See—
Jain, Sulekh C.; and Forkey, Paul W., 4,299,338, Cl. 222-152.000.

Formulabs Industrial Inks, Incorporated: *See*—
Raahauge, Jerald C., 4,299,163, Cl. 101-36.000.
Forsch, Hans H., to Grumman Aerospace Corporation. Stitch bond fastening of composite structures. 4,299,871, Cl. 428-104.000.
Forster, Wolfgang, to Elektromanufaktur Zangenstein Hanauer GmbH & Co. Diaphragm capsule for pressure monitors. 4,299,159, Cl. 92-98.00R.
Fosdick, Dale P.: *See*—
Rosaen, Borje O.; and Fosdick, Dale P., 4,299,696, Cl. 210-120.000.
Foss, Stephen D., to General Electric Company. Method for removing polychlorinated biphenyls from contaminated transformer dielectric liquid. 4,299,704, Cl. 210-634.000.
Fotheringham, Robert K.; and Spieth, Glen E. Anti-theft alarm circuit and compatible warning plugs. 4,300,130, Cl. 340-568.000.
Foti, Thomas M. Closed flow caloric test device. 4,299,237, Cl. 128-742.000.
Fougea, Bernard, to Coignet S.A. Induced draft cooling tower with improved outer support structure. 4,299,785, Cl. 261-111.000.
Fournier born Juillard, Daniele: *See*—
Badoz, Jacques; Boccara, Albert; and Fournier born Juillard, Daniele, 4,299,494, Cl. 356-432.000.
Fox, Edward C.: *See*—
Barnette, William E.; and Fox, Edward C., 4,300,226, Cl. 369-45.000.
Foxton, Michael G.: *See*—
Philip, Alexander S.; Parkinson, Allen; Foxton, Michael G.; Rees, Frederick H.; Howard, Graham; and Shuttleworth, Anthony E., 4,300,230, Cl. 370-63.000.
Fram Europe Limited: *See*—
Smith, Peter B., 4,299,706, Cl. 210-649.000.
Framatome: *See*—
Abenhaim, Georges; and Francillon, Gerard, 4,299,657, Cl. 376-217.000.
Frame, Robert R., to UOP Inc. Method of reactivating a catalytic composite of an adsorptive carrier material and a mercaptan oxidation catalyst. 4,299,729, Cl. 252-412.000.
France, Carey J.: *See*—
Robertson, Angus A. J.; France, Carey J.; and Roberts, Colin A., 4,299,010, Cl. 17-50.000.
Francillon, Gerard: *See*—
Abenhaim, Georges; and Francillon, Gerard, 4,299,657, Cl. 376-217.000.
Franck-Neumann, Michel; and Miesch, Michel, to Roussel Uclaf. Alkyl 3,3-dimethyl-2-(2-hydroxy-2-methyl-propyl)-1-cyclopropene-1-carboxylates. 4,299,973, Cl. 560-124.000.
Franklin, Paul R., Jr. Cooler with inclined upper CO_2 cooled surface. 4,299,429, Cl. 312-236.000.
Frantz, Leonard. Orthodontic bracket for straightening teeth. 4,299,569, Cl. 433-8.000.
Franz Xaver Bayer Isolierglasfabrik KG: *See*—
Bayer, Franz, 4,299,639, Cl. 156-104.000.
Freezesleeves of America, Inc.: *See*—
Crisman, Thomas L.; Moore, Stanley R.; and Weaver, Harry R., 4,299,100, Cl. 62-457.000.
Freibichler, Franz: *See*—
Igel, Wolfgang; Freibichler, Franz; Fehr, Werner; and Pfeifer, Willi, 4,299,083, Cl. 57-18.000.
Freier, Jan T.: *See*—
Harvey, Ronald B.; and Freier, Jan T., 4,299,479, Cl. 355-38.000.
Fremeaux, Pierre: *See*—
Faugeras, Pierre; Fremeaux, Pierre; Henry, Edouard; Malaterre, Roger; and Ros, Pierre, 4,299,798, Cl. 422-281.000.
Freund, Donald F.: *See*—
Nelson, Douglas G.; and Freund, Donald F., 4,299,589, Cl. 493-109.000.
Frey, Gunter: *See*—
Berger, Dieter; Frey, Gunter; Kuhr, Manfred; and Werner, Wolfgang, 4,299,917, Cl. 435-19.000.
Friesen, Peter. Self-cleaning screen assembly for radiator air inlets. 4,299,603, Cl. 55-290.000.
Friesen, Wilmer J.; and Hulet, Frank A., to Grede Foundries, Inc. Handling system for foundry sand molds. 4,299,269, Cl. 164-324.000.
Frint, William R.: *See*—
Ilardi, Joseph M.; Waggener, Richard W.; and Frint, William R., 4,299,799, Cl. 423-206.00T.
Fritz, Robert J.: *See*—
Aloi, Anthony J.; and Fritz, Robert J., 4,299,158, Cl. 89-137.000.
Fritzsche, Wilfried. Warning system for traffic routes at an avalanche danger hillside. 4,300,121, Cl. 340-22.000.
Froitzheim, Hermann: *See*—
Ibach, Harald; Froitzheim, Hermann; Bruchmann, Heinz-Dieter; and Lehwald, Sieghard, 4,300,045, Cl. 250-305.000.
Frye, Robert B., to General Electric Company. Silicone resin coating composition. 4,299,746, Cl. 260-29.20M.
Fryer, Rodney I.; Trybulski, Eugene J.; and Walser, Armin, to Hoffmann-La Roche Inc. Triazolobenzazepines. 4,299,971, Cl. 560-107.000.
Fuchs, Julius J., to Du Pont de Nemours, E. I., and Company. 2-Amino-4,6-disubstituted pyrimidines. 4,299,960, Cl. 544-320.000.
Fuji Photo Film Co., Ltd.: *See*—
Imatomi, Eiji; and Goda, Kensuke, 4,299,909, Cl. 430-264.000.
Isayama, Shogo; and Takehara, Nobumitsu, 4,299,188, Cl. 118-412.000.
Shiba, Keisuke; Nakao, Sho; and Toyama, Tadao, 4,299,912, Cl. 430-302.000.
Shimizu, Masayuki; Suzuki, Keiichi; and Inada, Kazutoshi, 4,299,559, Cl. 432-13.000.
Fujii, Masaharu; and Nakamura, Kenichi, to Kureha Kagaku Kogyo Kabushiki Kaisha; and Aska Electrons Co. Method and apparatus for detecting infrared rays and converting infrared rays to visible rays. 4,300,047, Cl. 250-330.000.
Fujimatsu, Wataru; Usagawa, Yasushi; Sasaki, Osamu; and Matsuura, Katsumi, to Konishiroku Photo Industry Co., Ltd. Method for forming a cyan dye image. 4,299,914, Cl. 430-384.000.
Fujimori, Tomoyoshi, heir: *See*—
Sawada, Kiyoshi; Ozawa, Nobuo; Oota, Katsuhiko; Narahara, Takefumi; Nakagawa, Masahiro; Fujimori, Yoshinobu, deceased; and Fujimori, Tomoyoshi, heir, 4,299,524, Cl. 414-117.000.
Fujimori, Yoshinobu, deceased: *See*—
Sawada, Kiyoshi; Ozawa, Nobuo; Oota, Katsuhiko; Narahara, Takefumi; Nakagawa, Masahiro; Fujimori, Yoshinobu, deceased; and Fujimori, Tomoyoshi, heir, 4,299,524, Cl. 414-117.000.
Fujioka, Yoshiki: *See*—
Kawada, Shigeki; Fujioka, Yoshiki; Ohta, Naoto; and Takahasi, Yasuo, 4,300,079, Cl. 318-390.000.
Fujisawa Pharmaceutical Co., Ltd.: *See*—
Kamiya, Takashi; and Takaya, Takao, 4,299,829, Cl. 424-246.000.
Fujita, Hiroo; Tsuzuki, Akira; and Morokawa, Shigeru, to Citizen Watch Company Limited. Matrix driving method for electro-optical display device. 4,300,137, Cl. 340-765.000.
Fujita, Yatsuka: *See*—
Ueno, Ryuzo; Matsuda, Toshio; Kanayama, Tatsuo; Tomiyasu, Kunihiko; Fujita, Yatsuka; and Inamine, Shigeo, 4,299,852, Cl. 426-266.000.
Fujita, Yoshiji: *See*—
Omura, Yoshiaki; Mori, Fumio; Fujita, Yoshiji; Nishida, Takashi; Hosogai, Takeo; Aihara, Sukeji; Tamai, Yoshin; Wada, Fumio; and Itoi, Kazuo, 4,299,839, Cl. 424-274.000.
Fujitani, Yoshiyasu; Muraki, Hideaki; Kondoh, Shiroh; Tomita, Makoto; Yokota, Kouji; and Sobukawa, Hideo, to Kabushiki Kaisha Toyota Chuo Kenkyusho. Catalyst for purifying exhaust gases and method for producing same. 4,299,734, Cl. 252-462.000.
Fujitsu Fanuc Limited: *See*—
Inaba, Hajimu; and Inagaki, Shigemi, 4,299,529, Cl. 414-590.000.
Kawada, Shigeki; Fujioka, Yoshiki; Ohta, Naoto; and Takahasi, Yasuo, 4,300,079, Cl. 318-390.000.
Fujitsu Limited: *See*—
Suzuki, Hideo, 4,299,679, Cl. 204-192.0EC.
Fukuda, David S.: *See*—
Abbott, Bernard J.; and Fukuda, David S., 4,299,762, Cl. 260-112.50R.
Abbott, Bernard J.; and Fukuda, David S., 4,299,763, Cl. 260-112.50R.
Fukumoto, Hiroshi: *See*—
Mitsuhashi, Yasuo; Kiuchi, Masashi; Takasu, Yoshio; Fukumoto, Hiroshi; Hino, Takashi; and Uchiyama, Masaki, 4,299,900, Cl. 430-122.000.
Fukumoto, Katsumi, to Mansei Kogyo Kabushiki Kaisha. Method of making a game racket. 4,299,348, Cl. 228-144.000.
Fukuta, Hiroshi: *See*—
Tanimura, Nobuyoshi; Fukuta, Hiroshi; Nishimura, Kotaro; and Yasui, Tokumasa, 4,300,213, Cl. 365-190.000.
Funada, Fumiaki; Takamatsu, Toshiaki; and Minezaki, Shigehiro, to Sharp Kabushiki Kaisha. Elastomer display. 4,299,450, Cl. 350-360.000.
Furlong, Noel L.: *See*—
Cleary, Sean J.; and Furlong, Noel L., 4,299,001, Cl. 10-133.000.
Furndorfler, Peter: *See*—
Gott, Hans; Furndorfler, Peter; Kogl, Fred; Ritter, Klaus; and Ritter, Gerhard, 4,299,523, Cl. 414-55.000.
Furukawa, Hiroshi: *See*—
Nishikawa, Eiichiro; Shinya, Masuo; Furukawa, Hiroshi; and Kaneko, Katsumi, 4,299,800, Cl. 423-219.000.
Furutani, Toshinobu: *See*—
Shinohara, Hiroshi; Otsuka, Yasuhiro; Matsumoto, Shinichi; Furutani, Toshinobu; and Wakizaka, Hiroshi, 4,299,627, Cl. 75-206.000.
Furuya, Osamu: *See*—
Nakayasu, Kazuo; Furuya, Osamu; and Hosaki, Yoshihiko, 4,299,978, Cl. 562-554.000.
Furuyama, Akira: *See*—
Arima, Takeo; and Furuyama, Akira, 4,300,132, Cl. 340-629.000.
Futamura, Shingo: *See*—
Bethea, Tristram W.; and Futamura, Shingo, 4,299,993, Cl. 568-617.000.
G. A. Serlachius Oy: *See*—
Hallstrom, Hardy R., 4,299,107, Cl. 72-120.000.
G. D. Searle & Co.: *See*—
Chorvat, Robert J., 4,299,774, Cl. 260-397.200.
Gagliani, John, to International Harvester Company. Melt spinning polyimide fibers. 4,299,787, Cl. 264-41.000.
Gagneraud, Francis. Process for making protective barriers against radioactive products. 4,300,056, Cl. 250-517.000.
Gajewski, Robert F.: *See*—
Beck, James R.; and Gajewski, Robert F., 4,299,614, Cl. 71-67.000.
Gajjar, Jagdishchandra T., to General Electric Co. Method and apparatus, for power line communications using zero crossing load interruption. 4,300,126, Cl. 340-310.00A.
Galante, Denise C.: *See*—
Hannan, Roy B., III; Goddard, Errol D.; and Galante, Denise C., 4,299,817, Cl. 424-70.000.

Gallwas, Johannes: *See*—
Weber, Robert; and Gallwas, Johannes, 4,299,656, Cl. 376-249.000.
Gamperle, Hermann: *See*—
Oetiker, Hans; Kummer, Emanuel; Rusterholz, Kurt; and Gamperle, Hermann, 4,299,597, Cl. 55-96.000.
Garavalia, Thomas A.: *See*—
Brockman, George T.; Garavalia, Thomas A.; and Kabat, Richard W., 4,299,535, Cl. 415-160.000.
Gardner, Jeffrey M., to Container Corporation of America. Six-cell partition. 4,299,351, Cl. 229-42.000.
Garfield, James R. Heat energy collector. 4,299,205, Cl. 126-449.000.
Garrett, Raymond K.; and Fifield, John G., to Dynaflex. Magnetic fluid treating apparatus. 4,299,701, Cl. 210-222.000.
Garrou, Philip E.; Dubois, Robert A.; and Bremmer, Bart J., to Dow Chemical Company, The. Preparation of cyano acetals. 4,299,777, Cl. 260-465.600.
Gasser, Francis: *See*—
Aubert, Jean P.; Gasser, Francis; and Longin, Robert, 4,299,858, Cl. 426-656.000.
Gau, Gerald S.; and Cain, David E., to Halliburton Services. Viscometer. 4,299,118, Cl. 73-59.000.
Gebruder Buhler AG: *See*—
Oetiker, Hans; Kummer, Emanuel; Rusterholz, Kurt; and Gamperle, Hermann, 4,299,597, Cl. 55-96.000.
Geczy, Bela, to Smith International, Inc. In-hole motor drill with bit clutch. 4,299,296, Cl. 175-65.000.
Gedicks, Klaus. Ski pole. 4,299,409, Cl. 280-819.000.
Geering, Quinton A., to Fisons Limited. Methods of combatting insects and acarids. 4,299,841, Cl. 424-282.000.
General Atomic Company: *See*—
Quade, Robert N., 4,299,660, Cl. 376-298.000.
General Electric Company: *See*—
Bayer, Eric W.; and Palmisano, Edward A., 4,300,110, Cl. 335-6.000.
Bochan, John, 4,299,319, Cl. 192-103.00B.
Fletcher, Thomas A., 4,300,187, Cl. 362-223.000.
Foss, Stephen D., 4,299,704, Cl. 210-634.000.
Frye, Robert B., 4,299,746, Cl. 260-29.20M.
Gajjar, Jagdishchandra T., 4,300,126, Cl. 340-310.00A.
Kim, Seung K., 4,300,165, Cl. 358-195.100.
Lauer, Richard E.; and Smith, Dallas F., 4,299,025, Cl. 29-596.000.
Leibinger, George E.; and Rowe, Albert, 4,300,112, Cl. 336-180.000.
Pinkasovich, Juliana, 4,299,558, Cl. 431-359.000.
Prada, Luis E., 4,300,025, Cl. 200-61.690.
Premerlani, William J., 4,300,181, Cl. 361-4.000.
Rask, Eric H.; and Castonguay, Roger N., 4,300,027, Cl. 200-153.00V.
Reinitz, Clayton W., 4,300,000, Cl. 568-724.000.
Rowen, William I.; Ekstrom, Thomas E.; and Rexford, Donald L., 4,299,088, Cl. 60-39.270.
Shanks, Bruce E., 4,300,189, Cl. 362-267.000.
Shuck, Elmer E.; and Stevenson, Howard R., Jr., 4,300,108, Cl. 333-81.00R.
General Electric Company Limited, The: *See*—
Philip, Alexander S.; Parkinson, Allen; Foxton, Michael G.; Rees, Frederick H.; Howard, Graham; and Shuttleworth, Anthony E., 4,300,230, Cl. 370-63.000.
General Housewares Corp.: *See*—
Thauer, William R., 4,299,327, Cl. 211-186.000.
General Kinematics Corporation: *See*—
Musschoot, Albert, 4,299,692, Cl. 209-1.000.
General Mills, Inc.: *See*—
Huston, Larry; Morrison, Clifton H.; Rasmussen, Glenn; and Tsuchiya, Takuzo, 4,299,150, Cl. 83-110.000.
General Motors Corporation: *See*—
Carolus, David T.; and Edwards, Ralph W., 4,300,141, Cl. 343-903.000.
Clingman, David L.; Cavanagh, John R.; Schechter, Berton; and Cross, Kenneth R., 4,299,865, Cl. 427-243.000.
Donley, William B., 4,299,862, Cl. 427-89.000.
Dunphy, Daniel L. S.; and Kearney, Mark B., 4,300,063, Cl. 307-353.000.
Sheridan, John J.; and Anderson, Willis H., 4,300,114, Cl. 338-172.000.
Van Landingham, Kenneth E., 4,300,081, Cl. 318-599.000.
Yu, Ruey J., 4,300,060, Cl. 307-272.00A.
General Signal Corporation: *See*—
Loniello, Peter J., 4,299,364, Cl. 248-58.000.
General Tire & Rubber Company, The: *See*—
Erickson, David E., 4,299,640, Cl. 156-110.00C.
Gens, Tore T., to H. Albihns Patentbyra AB. Device in a gear selection mechanism for a manual vehicle transmission. 4,299,135, Cl. 74-475.000.
Gentile, Anthony L.; Bowers, John L.; and Stafsudd, Oscar M., to Hughes Aircraft Company. Vapor transport process for growing selected compound semiconductors of high purity. 4,299,649, Cl. 156-610.000.
Geo Vann, Inc.: *See*—
Vann, Roy R.; Ribble, George W.; and George, Flint R., 4,299,287, Cl. 166-297.000.
George, Flint R.: *See*—
Vann, Roy R.; Ribble, George W.; and George, Flint R., 4,299,287, Cl. 166-297.000.
Gerhardt, Glenn E.: *See*—
Brasen, Wallace R.; Gerhardt, Glenn E.; and Gregorovich, Basil V., 4,299,753, Cl. 260-31.600.
Gerkema, Jan T.: *See*—
Koel, Gerrit J.; Gorter, Frederik W.; and Gerkema, Jan T., 4,300,177, Cl. 360-113.000.
Gianzero, Stanley: *See*—
Huchital, Gerald S.; and Gianzero, Stanley, 4,300,098, Cl. 324-338.000.
Gibbs, Alan J., to Australian Telecommunications Commission. Noise assessment of PCM regenerators. 4,300,233, Cl. 371-22.000.
Gibson Associates, Inc.: *See*—
Tomburo, Anthony F.; and Kachur, Nicholas W., 4,299,372, Cl. 249-107.000.
Gibson, Zebulon T., Jr.: *See*—
Adorno, Vincent C.; Fessenden, Elizabeth A.; Barr, Stephen R.; Gibson, Zebulon T., Jr.; and Carroll, John P., 4,299,683, Cl. 204-246.000.
Giesbrecht, George G., to Uniroyal Ltd. Roller die extruder and method of use. 4,299,789, Cl. 264-176.00R.
Giflo, Henrik. High mechanical strength reinforcement steel. 4,299,621, Cl. 75-124.000.
Gilch, Heinz G.: *See*—
Piestert, Gerhard; and Gilch, Heinz G., 4,299,942, Cl. 526-323.100.
Gilden, Morton, to Maryland Cup Corporation. Two-piece containers made from filled thermoplastic sheet material. 4,299,349, Cl. 229-1.50B.
Gilkeson, David C.; and Muehlhausen, Robert A., to Minnesota Mining & Manufacturing Company. Mirror scanner synchronized with moving folded document plane. 4,299,480, Cl. 355-66.000.
Gilmour, Margaret, executrix: *See*—
Gilmour, William D., deceased, 4,300,236, Cl. 375-23.000.
Gilmour, William D., deceased (by Gilmour, Margaret, executrix), to Lewis Security Systems Limited. Radio signalling systems. 4,300,236, Cl. 375-23.000.
Gilovich, Paul A.; and Tung, Joseph S., to Microcomputer Systems Corp. Fixed disc head actuator assembly. 4,300,176, Cl. 360-105.000.
Gingras, Joel A., Sr.: *See*—
Heffernan, William R.; Vega, Mary-Louise; and Gingras, Joel A., Sr., 4,299,185, Cl. 116-202.000.
Giobbio, Vincenzo; Ornato, Giorgio; and Buracchi, Livio, to Pierrel S.p.A. Process for synthesizing 2-sulphanilamido-3-methoxypyrazine. 4,299,962, Cl. 544-408.000.
Girone, Joseph M., to Process Engineering Incorporated. Methods of and apparatus for heating fluid materials. 4,299,199, Cl. 126-420.000.
Giroux, Maurice; Sivignon, Paul; and Susini, Claude, to Societe de Moulage de Tournus. Safety pouring closure. 4,299,339, Cl. 222-153.000.
Gits Brothers Mfg. Co.: *See*—
Wahl, Edward C., 4,299,398, Cl. 277-65.000.
Giuffrida, Anthony J.: *See*—
Venkatasubramanian, Kalyanasundram; Jain, Surendar M.; and Giuffrida, Anthony J., 4,299,677, Cl. 204-180.00P.
Glabe, Elmer F.; Anderson, Perry W.; and Laftsidis, Stergios, to Food Technology Products. Grain processing to inhibit mold growth. 4,299,854, Cl. 426-331.000.
Glassman, Jacob A., to Southeastern Research Foundation, The. Surgical extracter. 4,299,225, Cl. 128-328.000.
Glatthorn, Raymond H.: *See*—
Schneider, Urban A.; Monley, Robert E.; Glatthorn, Raymond H.; and Nelsou, Robert L., 4,300,034, Cl. 219-75.000.
Gluskin, Lev Y.: *See*—
Azbukin, Vladimir G.; Balandin, Jury F.; Gorynin, Igor V.; Gluskin, Lev Y.; Zvezdin, Jury I.; Ignatenko, Alexandr G.; Krasnov, Alexandr N.; Melekhov, Rostislav K.; Osipova, Inna S.; Pavlov, Valery N.; Khokhlov, Alexandr A.; Stepanov, Ivan A.; Anfimov, Alexandr F.; Ardentov, Vasily V.; Burmakin, Viktor M.; Ignatov, Viktor A.; Rokhlin, Eduard A.; and Zhitkov, Vladimir V., 4,299,623, Cl. 75-128.00R.
Goda, Kensuke: *See*—
Imatomi, Eiji; and Goda, Kensuke, 4,299,909, Cl. 430-264.000.
Goddard, Errol D.: *See*—
Hannan, Roy B., III; Goddard, Errol D.; and Galante, Denise C., 4,299,817, Cl. 424-70.000.
Godfrey, Darryl A., to Eastman Kodak Company. Multi-component hot-melt adhesives. 4,299,745, Cl. 260-28.5AV.
Godfrey, Richard H.; and Peck, James O., to RCA Corporation. Cathode-ray tube screen border improvement. 4,300,070, Cl. 313-403.000.
Goetze AG: *See*—
Haack, Ernest E., 4,299,629, Cl. 75-251.000.
Goff, Donald D.; and O'Brien, John T., to Phillips Petroleum Co. Three component detector and housing for same. 4,300,220, Cl. 367-188.000.
Gold, Elijah H.: *See*—
Loebenberg, David; and Gold, Elijah H., 4,299,845, Cl. 424-324.000.
Goldshtein, Boris G.: *See*—
Nikolaev, Igor V.; Lednikov, Anatoly I.; Goldshtein, Boris G.; and Gornik, Leonid A., 4,299,293, Cl. 173-104.000.
Golicz, Roman M.; Gunther, William H., Jr.; and Hough, James W., to American Express Company. Machine and method for packaging travelers checks. 4,299,073, Cl. 53-493.000.
Goller, Heinz: *See*—
Hutter, Josef; and Goller, Heinz, 4,299,634, Cl. 106-103.000.
Good, Thomas W.: *See*—
Pauly, Ronald R.; Good, Thomas W.; and Hastings, John D., 4,299,051, Cl. 46-221.000.

Goodell, Thomas W., to Direct Reduction Corporation, The. Method and apparatus for char separation from the discharge materials of an iron oxide reducing kiln. 4,299,694, Cl. 209-139.00R.
Goodman, Erik D.: *See—*
Korn, Lawrence D.; Goodman, Erik D.; and MacCluer, Charles R., 4,300,135, Cl. 340-690.000.
Goodrich, George W.: *See—*
Andrews, Gilman B.; and Goodrich, George W., 4,299,117, Cl. 73-35.000.
Gornik, Leonid A.: *See—*
Nikolaev, Igor V.; Lednikov, Anatoly I.; Goldshtein, Boris G.; and Gornik, Leonid A., 4,299,293, Cl. 173-104.000.
Gorter, Frederik W.: *See—*
Koel, Gerrit J.; Gorter, Frederik W.; and Gerkema, Jan T., 4,300,177, Cl. 360-113.000.
Gorynin, Igor V.: *See—*
Azbukin, Vladimir G.; Balandin, Jury F.; Gorynin, Igor V.; Gluskin, Lev Y.; Zvezdin, Jury I.; Ignatenko, Alexandr G.; Krasnov, Alexandr N.; Melekhov, Rostislav K.; Osipova, Inna S.; Pavlov, Valery N.; Khokhlov, Alexandr A.; Stepanov, Ivan A.; Anfimov, Alexandr F.; Ardentov, Vasily V.; Burmakin, Viktor M.; Ignatov, Viktor A.; Rokhlin, Eduard A.; and Zhitkov, Vladimir V., 4,299,623, Cl. 75-128.00R.
Goshima, Norio: *See—*
Matsuda, Akira; Goshima, Norio; Yasuda, Shigeo; Iwasaki, Motoaki; and Nishino, Hiroshi, 4,300,118, Cl. 340-58.000.
Gosin, Naum. Ceramic mixture. 4,299,632, Cl. 501-127.000.
Gossard, Amzi, to Kerr-McGee Coal Corporation. Process for degasification of subterranean mineral deposits. 4,299,295, Cl. 175-45.000.
Gott, Hans; Furndorfler, Peter; Kogl, Fred; Ritter, Klaus; and Ritter, Gerhard, to EVG Entwicklungs-und Verwertungs-Gesellschaft m.b.H. Machine for stacking mesh grids with alternate grids rotated through 180°. 4,299,523, Cl. 414-55.000.
Gottschalk, William P., to W. Hegenscheidt Gesellschaft mbH. Apparatus for smooth rolling the bearing seats of crankshafts. 4,299,017, Cl. 29-90.00R.
Goudfrooy, Hendrik, to Nederlandsch Central Organisatie voor Toegepast-Natuurwetenschappelijk Onderzoek. External fracture immobilization splint. 4,299,212, Cl. 128-92.00A.
Goudie, Alexander C., to Beecham Gronp Limited. 2-Acyloxy-4-(6-substituted-2-naphthyl)butanes. 4,299,844, Cl. 424-308.000.
Gould, Geroge K.; and Steinberg, Eric, to Video Corporation of America. Ordering terminal. 4,300,040, Cl. 235-381.000.
Gould Inc.: *See—*
Cronin, John C.; and Wilson, Walter M., 4,300,028, Cl. 200-155.00R.
Dimarco, Bernard; and Kralik, Andrew J., 4,300,030, Cl. 200-42.00T.
Koneval, Donald J., 4,299,130, Cl. 73-766.000.
Gourse, Jerome A., to Velsicol Chemical Corporation. Method of increasing the yields of sugar cane with phosphonic acids. 4,299,615, Cl. 71-86.000.
Gouya, Takao: *See—*
Konishi, Hideo; Matsuoka, Kazunori; and Gouya, Takao, 4,300,238, Cl. 455-161.000.
Gozlan, Gilles R., to Raychem Pontoise S.A. Method for connecting substrates. 4,299,028, Cl. 29-828.000.
Grad, Gerald: *See—*
Seitz, Max; Thumm, Hans P.; Hagen, Gunther; and Grad, Gerald, 4,299,131, Cl. 73-789.000.
Graham, Kenneth: *See—*
Thawley, Clive S.; Graham, Kenneth; and Brittain, Austin, 4,300,052, Cl. 250-453.000.
Graham, Richard H.: *See—*
Tsai, Shirley C.; Graham, Richard H.; and Oder, Robin R., 4,299,285, Cl. 166-259.000.
Gram, Hans, to Brodrene Gram AS. Method for packing articles into a number of strips of packing material and apparatus for carrying out the method. 4,299,075, Cl. 53-550.000.
Granz, Axel: *See—*
Oltmanns, Heinrich; and Granz, Axel, 4,299,070, Cl. 52-309.110.
Granzow, Albrecht H., to American Cyanamid Company. Flame retarded, rubber-modified, polyphenylene ether resin compositions. 4,299,760, Cl. 260-45.9KA.
Grapha-Holding AG: *See—*
Muller, Hans, 4,299,378, Cl. 270-54.000.
Grau, Thomas G., to Bell Telephone Laboratories, Incorporated. Locking electrical connector apparatus. 4,299,432, Cl. 339-75.00M.
Grede Foundries, Inc.: *See—*
Friesen, Wilmer J.; and Hulet, Frank A., 4,299,269, Cl. 164-324.000.
Green, George E.; and Irving, Edward, to Ciba-Geigy Corporation. Photopolymerizable and thermally polymerizable compositions. 4,299,938, Cl. 526-192.000.
Greenberg, Allen A. Method and composition for forming a plaster object. 4,299,790, Cl. 264-299.000.
Greene Plastics Corporation: *See—*
Fayal, James E.; and Morone, Joseph A., III, 4,299,111, Cl. 72-342.000.
Greenhead, David L.; and Heybourn, Frank, to Molins Limited. Cigarette conveyor system. 4,299,322, Cl. 198-347.000.
Greenspan, Myron. Whirling toy and whirling toy game. 4,299,394, Cl. 273-348.000.
Greer, Cecil B. Tool retaining apparatus. 4,299,280, Cl. 166-75.00R.
Greer Hydraulics, Incorporated: *See—*
Zahid, Abduz, 4,299,254, Cl. 138-30.000.
Grego, Joseph F., Jr. Flywheel puller. 4,299,020, Cl. 29-259.000.
Gregorian, Razmic S.; and Namboodri, Chettoor G., to United Merchants and Manufacturers, Inc. Textile printing process. 4,299,591, Cl. 8-477.000.
Gregorovich, Basil V.: *See—*
Brasen, Wallace R.; Gerhardt, Glenn E.; and Gregorovich, Basil V., 4,299,753, Cl. 260-31.600.
Greuter, Hans: *See—*
Dingwall, John G.; Greuter, Hans; Martin, Pierre; Ackermann, Peter; and Gsell, Laurenz, 4,299,967, Cl. 549-65.000.
Griep, Winfried: *See—*
Kroger, Gerhard; and Griep, Winfried, 4,299,139, Cl. 74-560.000.
Grommes, John J.; and Bekemeier, Karl H., to Tru-Par, Inc. Radius dresser. 4,299,196, Cl. 125-11.0AT.
Grosch, Wayne A. Swivel with removable packing gland. 4,299,416, Cl. 285-281.000.
Gross, Thomas D.: *See—*
Benz, Bernard D.; Carlin, Edward M., Jr.; and Gross, Thomas D., 4,299,504, Cl. 400-208.000.
Grove, Thomas C.; and Bennet, William S., II. Path alignment apparatus. 4,299,483, Cl. 356-152.000.
Gruber, George J. Ultrasonic satellite-pulse technique for characterizing defects of arbitrary shape. 4,299,128, Cl. 73-627.000.
Grumman Aerospace Corporation: *See—*
Eivers, Donald J.; and Kovacs, Eddie J., 4,300,207, Cl. 364-900.000.
Forsch, Hans H., 4,299,871, Cl. 428-104.000.
Gryskiewicz, Gregory A., to Reese Enterprises, Inc. Strip structure for well screen. 4,299,283, Cl. 166-231.000.
Gsell, Laurenz: *See—*
Dingwall, John G.; Greuter, Hans; Martin, Pierre; Ackermann, Peter; and Gsell, Laurenz, 4,299,967, Cl. 549-65.000.
GTC Gibson Technical Company Limited: *See—*
Kummerl, Klaus, 4,299,022, Cl. 29-450.000.
GTE Automatic Electric Labs Inc.: *See—*
Van Husen, Hendrik, 4,300,021, Cl. 179-18.0FA.
GTE Products Corporation: *See—*
Jayne, Max L., 4,299,433, Cl. 339-91.00R.
Gubitz, Franklyn W., to Sterling Drug Inc. 1,5-Methano-1,4-benzodiazocines, intermediates therefor, and method of use and compositions thereof. 4,299,830, Cl. 424-250.000.
Gueremy, Claude G. A.: *See—*
Champseix, Alain A.; Gueremy, Claude G. A.; and Le Fur, Gerard R., 4,299,835, Cl. 424-258.000.
Gulf Oil Corporation: *See—*
Antonoplos, Patricia A.; and Heilman, William J., 4,299,750, Cl. 260-30.200.
Gulf Research & Development Company: *See—*
Madgavkar, Ajay M.; Vogel, Roger F.; and Swift, Harold E., 4,299,086, Cl. 60-39.060.
Tsai, Shirley C.; Graham, Richard H.; and Oder, Robin R., 4,299,285, Cl. 166-259.000.
Gullfiber AB: *See—*
Johansson, Ingvar H.; Sanden, Per-Olof; Holmgren, Pahr O. A.; and Johansson, Helle G., 4,299,074, Cl. 53-529.000.
Gunther, William H., Jr.: *See—*
Golicz, Roman M.; Gunther, William H., Jr.; and Hough, James W., 4,299,073, Cl. 53-493.000.
Guschin, Vyacheslav N.: *See—*
Polyakov, Anisim A.; Yarnykh, Vladimir S.; Smirnov, Anatoly M.; Simetsky, Mark A.; Kudryavtsev, Evgeny A.; Talanov, German A.; Zakomyrdin, Alexandr A.; Rudenko, Boris N.; Rakhmanin, Pavel P.; and Guschin, Vyacheslav N., 4,299,816, Cl. 424-45.000.
Gusse, Henry: *See—*
Seale, James B.; and Gusse, Henry, 4,299,531, Cl. 414-746.000.
Gustin, Pol A. G. J.; and Schayes, Raymond G. G., to U.S. Philips Corporation. Electrostatic write head. 4,300,146, Cl. 346-155.000.
Gutierrez, Eddie N.; and Lamberti, Vincent, to Lever Brothers Company. Ester derivatives of polycarboxylic acids and process for making same. 4,299,773, Cl. 260-343.600.
Guynes, William L. Rotatable mount for film cassette. 4,300,053, Cl. 250-468.000.
H. Albihns Patentbyra AB: *See—*
Gens, Tore T., 4,299,135, Cl. 74-475.000.
H. Heer & Co.: *See—*
Buluschek, Bruno; Magerli, Walter; and Muller, Erich, 4,299,362, Cl. 248-49.000.
H & M Distributors, Inc.: *See—*
Williams, Don W., 4,299,554, Cl. 431-16.000.
Haack, Ernest E., to Goetze AG. Metal powder mixtures, sintered article produced therefrom and process for producing same. 4,299,629, Cl. 75-251.000.
Haag, Werner O.; Rodewald, Paul G.; and Weisz, Paul B., to Mobil Oil Corporation. Conversion of biological material to liquid fuels. 4,300,009, Cl. 585-408.000.
Haagse Bakkerijmachinefabriek Arnold Kalmeijer B.V.: *See—*
van der Togt, Jacobus C., 4,299,550, Cl. 425-321.000.
Haaland, Per, to A/S Den Norske Remfabrik. Gasket of rubber or similar material. 4,299,399, Cl. 277-207.00A.
Hack, Heinrich: *See—*
Schonfeld, Harald; Hack, Heinrich; and Arras, Ludwig, 4,300,197, Cl. 364-508.000.
Haemmerle AG: *See—*
Haenni, Eduard A.; and Ragletti, Christian, 4,299,149, Cl. 83-91.000.
Haenni, Eduard A.; and Ragletti, Christian, to Haemmerle AG. Apparatus for removing and stacking of sheet metal strips cut by a plate shear. 4,299,149, Cl. 83-91.000.

Hafner, Udo: *See—*
Knapp, Heinrich; Sauer, Rudolf; Romann, Peter; Hafner, Udo; Wilfert, Thomas; and Kammerer, Werner, 4,299,124, Cl. 73-204.000.
Romann, Peter; and Hafner, Udo, 4,299,125, Cl. 73-204.000.
Hagberg, Lars; and Jonsen, Ake, to Aktiebolaget Indesko. Dipping device. 4,299,189, Cl. 118-625.000.
Hagemann, Edmund; and Wildschutte, Herbert, to Volkswagenwerk AG. Window operating assembly. 4,299,057, Cl. 49-375.000.
Hagen, Gunther: *See—*
Seitz, Max; Thumm, Hans P.; Hagen, Gunther; and Grad, Gerald, 4,299,131, Cl. 73-789.000.
Hague, Donald, to Heat Exchangers Africa Limited. Finned tubing. 4,299,106, Cl. 72-78.000.
Hahn & Clay: *See—*
Pechacek, Raymond E., 4,299,332, Cl. 220-378.000.
Hakes, Gary A.; Shook, Norma G.; Cackley, George W.; Burdette, Stephen D.; and Morris, Hugh C., to Caterpillar Tractor Co. Vehicle steering brake and clutch control. 4,299,300, Cl. 180-6.200.
Hakkinen, Taisto. Apparatus for atomizing medicaments. 4,299,355, Cl. 239-338.000.
Hales, Eric C.; and Hodkinson, Harold, to Automotive Products Limited. Pressure modulating valves for braking systems. 4,299,426, Cl. 303-6.00C.
Hall, James A.: *See—*
Paton, Neil E.; and Hall, James A., 4,299,626, Cl. 75-175.500.
Halliburton Company: *See—*
Robbins, Carl A., 4,300,043, Cl. 250-262.000.
Halliburton Services: *See—*
Baker, Eugene E.; and Carter, Ernest E., Jr., 4,299,397, Cl. 277-34.000.
Gan, Gerald S.; and Cain, David E., 4,299,118, Cl. 73-59.000.
Hallstrom, Hardy R., to G. A. Serlachius Oy. Device for forming a collar around a hole in the wall of a pipe. 4,299,107, Cl. 72-120.000.
Halm Industries Co., Inc.: *See—*
Quinton, Brian M.; Quinci, Emanuel R.; and Harrison, Henry, deceased, 4,299,325, Cl. 209-553.000.
Hame, Walter; and Knappe, Ortwin. Apparatus for storing self-heating radioactive materials. 4,299,659, Cl. 376-272.000.
Hamill, Robert L.; and Wild, Gene M., to Eli Lilly and Company. Mycarosyltylactone. 4,299,953, Cl. 536-17.00R.
Hanlon, Donald V.: *See—*
Rogers, Roy E., 4,299,147, Cl. 82-47.000.
Hann, William M.: *See—*
Dupre, Jean; and Hann, William M., 4,299,710, Cl. 252-8.50A.
Hannan, Roy B., III; Goddard, Errol D.; and Galante, Denise C., to Union Carbide Corporation. Hair care compositions. 4,299,817, Cl. 424-70.000.
Hansen, Hans J.; Myl, Alfred D.; and Vandevoorde, Jacques P., to Hoffmann-La Roche Inc. Carcinoembryonic antigen determination. 4,299,815, Cl. 424-1.000.
Hanson, Chris A., to Hanson Industries Incorporated. Footwear having heel width adjustment. 4,299,039, Cl. 36-97.000.
Hanson Industries Incorporated: *See—*
Hanson, Chris A., 4,299,039, Cl. 36-97.000.
Happe, Peter, to Johann Baptist Rombach GmbH & Co. KG. Check and regulator valve. 4,299,250, Cl. 137-546.000.
Hardin, Roy T., Jr., to United States of America, Energy. Connecting apparatus for limited rotary or rectilinear motion. 4,299,662, Cl. 376-260.000.
Harlan, F. Kellogg. Shelf bracket. 4,299,367, Cl. 248-235.000.
Harman, Jefferson H.; and Stevens, G. Randall, to PerSci, Inc. Guard band control for magnetic disks. 4,300,174, Cl. 360-78.000.
Harman, Maurice, to Energy Equipment Company Limited, The. Heated chamber walls. 4,299,562, Cl. 432-58.000.
Harper-Wyman Company: *See—*
Brouwer, Frans, 4,299,557, Cl. 431-71.000.
Harre, Kurt J. S., to Facit Aktiebolag. Assembly for a detachable connection for a printing element in an electric office machine. 4,299,502, Cl. 400-144.200.
Harrelson Rubber Company: *See—*
DeHaven, William M., 4,299,647, Cl. 156-394.0FM.
Harris Corporation: *See—*
Piotrowski, Leo R., 4,299,024, Cl. 29-577.00C.
Harris, Murray T.; and Solheim, Curtis D., to Perkin-Elmer Corporation, The. Data recording and reading circuitry. 4,300,173, Cl. 360-51.000.
Harris, Robert H.; Humphrey, Troy G.; and Stimson, John J., Jr., to Labeco Harvesters, Inc. Grape harvester. 4,299,081, Cl. 56-330.000.
Harrison, Colin G.; and Young, Ian R., to EMI Limited. Imaging systems. 4,300,096, Cl. 324-309.000.
Harrison, Dorothy, administratrix: *See—*
Quinton, Brian M.; Quinci, Emanuel R.; and Harrison, Henry, deceased, 4,299,325, Cl. 209-553.000.
Harrison, Henry, deceased: *See—*
Quinton, Brian M.; Quinci, Emanuel R.; and Harrison, Henry, deceased, 4,299,325, Cl. 209-553.000.
Harrison, Venton R. Auto-optical centering device for photometers. 4,299,493, Cl. 356-414.000.
Harrison, Walter C.; and Sides, Jerry L., to Texaco Inc. Tracer fluids for enhanced oil recovery. 4,299,709, Cl. 252-8.55D.
Hartman, Kenneth O.; and Morton, James W., to Hercules Incorporated. Alkoxy substituted aromatic stabilizers for crosslinked CMDB propellant. 4,299,636, Cl. 149-19.400.
Hartmann, Werner; and Kusters, Karl-Heinz, to Kusters, Eduard. Controlled deflection roll system. 4,299,162, Cl. 100-43.000.
Harvey, Donald M., to Eastman Kodak Company. Apparatus for restoring lost data to a memory device. 4,299,466, Cl. 354-173.000.
Harvey, Ronald B.; and Freier, Jan T., to Pako Corporation. Photographic printer with sensitivity control for classification of negatives. 4,299,479, Cl. 355-38.000.
Hasegawa, Iwao, to Osawa Precision Industries, Ltd. Automatic focusing unit for camera. 4,299,460, Cl. 354-25.000.
Hashima, Akiyoshi: *See—*
Baba, Masaharu; Honda, Kiyokazu; Yoshiike, Yoshiji; and Hashima, Akiyoshi, 4,299,430, Cl. 339-17.00D.
Hashimoto, Junichi, to Pentel Kabushiki Kaisha. Mechanical pencil. 4,299,506, Cl. 401-72.000.
Hashimoto, Mitsuru; Sakai, Kiyoshi; Ghta, Masafumi; Kozima, Akio; Sasaki, Masaomi; and Tsutsui, Kyoji, to Ricoh Co., Ltd. Electrophotographic sensitive materials containing a disazo pigment. 4,299,896, Cl. 430-58.000.
Hashio, Moriki; and Kimura, Tomohiko, to Sumitomo Kinzoku Kogyo Kabushiki Kaisha. Method for increasing the width of a cast piece. 4,299,266, Cl. 164-491.000.
Hashizume, Yoshio; Itoh, Masanori; Sakai, Yasumasa; and Kamita, Akiyosi, to Daicel Ltd. Aqueous coating compositions containing electroconductive copolymer. 4,299,748, Cl. 260-29.6RW.
Haskell, Barin G., to Bell Telephone Laboratories, Incorporated. Time compression multiplexing of video signals. 4,300,161, Cl. 358-142.000.
Hastings-James, Richard; and Holbrook, George W., to Canadian Patents & Dev. Limited. Multi-filar moving coil loudspeaker. 4,300,022, Cl. 179-115.5DV.
Hastings, John D.: *See—*
Pauly, Ronald R.; Good, Thomas W.; and Hastings, John D., 4,299,051, Cl. 46-221.000.
Hatch, Charles E., III, to FMC Corporation. Preparation of esters. 4,299,776, Cl. 260-465.00D.
Hattori, Makoto: *See—*
Takeshita, Akira; Yokoyama, Kaneo; and Hattori, Makoto, 4,299,771, Cl. 260-378.000.
Hauni-Werke Korber & Co. KG: *See—*
Wochnowski, Waldemar, 4,300,201, Cl. 364-567.000.
Hauser, Werner: *See—*
Wissner, Adolf; Hauser, Werner; Bitners, Feliks; and Wambach, Raimund, 4,300,004, Cl. 570-211.000.
Hawkins, Harvey G., to Emerson Electric Co. Extension ladder lock. 4,299,306, Cl. 182-210.000.
Hayakawa, Masao; Maeda, Takamichi; and Kumura, Masao, to Sharp Kabushiki Kaisha. Flat shaped semiconductor encapsulation. 4,300,153, Cl. 357-80.000.
Hayama, Yasunobu; Tanouchi, Kuniaki; Abe, Mitsuhiro; and Ghkura, Katsuhiro, to Mitsubishi Jukogyo Kabushiki Kaisha. Method of controlling roll eccentricity of rolling mill and apparatus for performing the same method. 4,299,104, Cl. 72-20.000.
Hayashi, Kohtaro; Morihara, Ko; and Nakamura, Kohji, to Chisso Engineering Co., Ltd. Method and apparatus for producing tubular plastic films. 4,299,793, Cl. 264-564.000.
Hayes, Robert A.: *See—*
Hergenrother, William L.; Schwarz, Richard A.; Ambrose, Richard J.; and Hayes, Robert A., 4,299,932, Cl. 525-130.000.
Haynes, Hendrick W.: *See—*
Lathrop, Dan H.; and Haynes, Hendrick W., 4,299,043, Cl. 40-624.000.
Hazeltine Corporation: *See—*
Morgenfruh, Rudolph A.; and Burnham, William W., 4,300,158, Cl. 358-80.000.
Heat Exchangers Africa Limited: *See—*
Hague, Donald, 4,299,106, Cl. 72-78.000.
Heeren, Richard H., to Teletype Corporation. Shift register suitable for controlling the energization of a multiwinding motor. 4,300,084, Cl. 318-696.000.
Heffernan, William R.; Vega, Mary-Louise; and Gingras, Joel A., Sr., to American Cyanamid Company. Device for warning of impending roof-fall in underground excavations. 4,299,185, Cl. 116-202.000.
Heider, Joachim: *See—*
Austel, Volkhard; Kutter, Eberhard; Heider, Joachim; and Diederen, Willi, 4,299,834, Cl. 424-253.000.
Heiges, Robert W., to Automation Devices, Inc. Constant amplitude controller and method. 4,300,083, Cl. 318-686.000.
Heilman, William J.: *See—*
Antonoplos, Patricia A.; and Heilman, William J., 4,299,750, Cl. 260-30.200.
Held, Kurt. Belt tensioning and control for double belt presses. 4,299,551, Cl. 425-371.000.
Helffer, Bernard; and Raisin, Jean-Pierre, to Agence Nationale de Valorisation de la Recherche (ANVAR). Method and installation for supplying a sewing machine. 4,299,179, Cl. 112-121.120.
Heller, Lawrence G.: *See—*
Chakravarti, Satya N.; Heller, Lawrence G.; and Pricer, Wilbur D., 4,300,210, Cl. 365-45.000.
Helm, Frederick A., to Auto Trends, Inc. Automobile luggage rack. 4,299,346, Cl. 224-325.000.
Hendrickx, Andreas J. J., to Oce-Andeno B.V. Desensitized TNT; its preparation and use. 4,300,001, Cl. 568-767.000.
Henkel Kommanditgesellschaft auf Aktien: *See—*
Asbeck, Adolf; Eckelt, Michael; Erwied, Werner; Heyden, Rudi; and Petzold, Manfred, 4,299,975, Cl. 560-151.000.
Meffert, Alfred; Scheuermann, Fanny; and Werdehausen, Achim, 4,299,737, Cl. 252-522.00R.
Wehle, Volker; Rupilius, Wolfgang; Reiffert, Jurgen; and Rogall, Gabriele, 4,299,725, Cl. 252-389.00A.

Henry, Edouard: *See*—
Faugeras, Pierre; Fremeaux, Pierre; Henry, Edouard; Malaterre, Roger; and Ros, Pierre, 4,299,798, Cl. 422-281.000.
Hense, Gunter. Apparatus for producing an aerosol. 4,299,784, Cl. 261-78.00A.
Herchenbach, Horst; Ramesohl, Hubert; and Brachthauser, Kunibert, to Klockner-Humboldt-Deutz AG. Apparatus for the thermal treatment of fine-grained material with hot gases. 4,299,564, Cl. 432-106.000.
Hercules Incorporated: *See*—
Hartman, Kenneth O.; and Morton, James W., 4,299,636, Cl. 149-19.400.
Hergenrother, William L.; Schwarz, Richard A.; Ambrose, Richard J.; and Hayes, Robert A., to Firestone Tire & Rubber Company, The. Amine terminated polymers and the formation of block copolymers. 4,299,932, Cl. 525-130.000.
Hermawan, Samuel S. Moving walkway. 4,299,321, Cl. 198-321.000.
Herron, Charles R.: *See*—
LeBegue, Maurice K.; and Herron, Charles R., 4,299,424, Cl. 299-93.000.
Heuwieser, Erwin; Kammermaier, Johann; and Roedl, Peter, to Siemens Aktiengesellschaft. Device for measuring the level of a liquid in a container. 4,299,126, Cl. 73-295.000.
Hewett, Colin L.; and Savage, David S., to Akzona Incorporated. Benzo-bicyclononene-derivatives. 4,299,984, Cl. 564-426.000.
Hewlett-Packard Company: *See*—
Dugas, Roger A., 4,299,251, Cl. 137-556.000.
Heybourn, Frank: *See*—
Greenhead, David L.; and Heybourn, Frank, 4,299,322, Cl. 198-347.000.
Heyden, Rudi: *See*—
Asbeck, Adolf; Eckelt, Michael; Erwied, Werner; Heyden, Rudi; and Petzold, Manfred, 4,299,975, Cl. 560-151.000.
Hickey-Mitchell Company: *See*—
Ostermann, Peter, 4,299,335, Cl. 221-241.000.
Hicks, Alan A.: *See*—
Kulesza, Ralph J.; Hicks, Alan A.; Licitis, Gunars, Jr.; and Morrison, Howard J., 4,299,386, Cl. 273-85.00F.
Hicks, David E. Electric charging apparatus for ground vehicles. 4,300,088, Cl. 320-61.000.
Higuchi, Yoshiro: *See*—
Ito, Yasuro; Higuchi, Yoshiro; Mochida, Yutaka; Kemmochi, Sampei; Kaga, Hideharu; and Yamamoto, Yasuhiro, 4,299,633, Cl. 106-97.000.
Hikuma, Motohiko: *See*—
Obana, Haruo; Shirakawa, Tadashi; Hikuma, Motohiko; Yasuda, Takeo; Karube, Isao; and Suzuki, Shuichi, 4,299,669, Cl. 204-1.00T.
Hildreth, John D., to Clayton Aniline Co., Ltd. Catalytic reduction of 2-nitronaphthalene-4,8-disulfonic acid ammonium salt. 4,299,779, Cl. 260-508.000.
Hinnenkamp, James A.; and Kwiatek, Jack, to National Distillers and Chemical Corp. Halogenated cyclopentadiene diadducts of diacetylenic compounds. 4,299,758, Cl. 260-45.70R.
Hino, Takashi: *See*—
Mitsuhashi, Yasuo; Kiuchi, Masashi; Takasu, Yoshio; Fukumoto, Hiroshi; Hino, Takashi; and Uchiyama, Masaki, 4,299,900, Cl. 430-122.000.
Hiperblock, S.A.: *See*—
Batlle Crosas, Pedro, 4,300,057, Cl. 307-10.0AT.
Hirai, Jin. Endoscope washing apparatus. 4,299,244, Cl. 134-102.000.
Hirai, Yutaka: *See*—
Yamamoto, Ryuichi; Hirai, Yutaka; Takagi, Akinobu; and Tashima, Zyunzi, 4,299,766, Cl. 260-239.30R.
Hiramatsu, Kenzo: *See*—
Aiyama, Fumihiko; and Hiramatsu, Kenzo, 4,299,605, Cl. 55-370.000.
Hirano, Mikio; and Horiuchi, Susumu, to Hitachi, Ltd. Method of and apparatus for producing radio-active waste package. 4,299,721, Cl. 252-628.000.
Hirata, Masanori: *See*—
Wada, Takanori; Sano, Hitoshi; Sato, Shigekatsu; Saiki, Yukihiro; Shimizu, Keisuke; Hirata, Masanori; Naka, Junichi; Takahashi, Takayoshi; Ishii, Toshiaki; and Kamiki, Toshikazu, 4,299,855, Cl. 426-512.000.
Hirata, Minoru: *See*—
Kato, Masashi; Obata, Hirozo; Hirata, Minoru; Matsukuma, Hitoshi; Ishikawa, Kunio; and Tanaka, Junichi, 4,299,108, Cl. 72-178.000.
Hirosaki, Botaro, to Nippon Electric Co., Ltd. Transmitter and receiver for an othogonally multiplexed QAM signal of a sampling rate N times that of PAM signals, comprising an N/2-point offset fourier transform processor. 4,300,229, Cl. 370-20.000.
Hirose, Hiroshi: *See*—
Nogami, Taro; and Hirose, Hiroshi, 4,299,486, Cl. 356-318.000.
Hirose, Takao: *See*—
Suzuki, Hiroshi; Narasaki, Hideo; Seki, Sigeru; Endo, Kiichi; and Hirose, Takao, 4,299,738, Cl. 252-541.000.
Hirose, Yasunori: *See*—
Matsumoto, Tadashi; Kuratani, Osamu; Hirose, Yasunori; and Toba, Susumu, 4,299,997, Cl. 568-678.000.
Hitachi Koki Company, Limited: *See*—
Monma, Hisayoshi; and Katagiri, Shigenobu, 4,300,085, Cl. 318-696.000.
Hitachi, Ltd.: *See*—
Hirano, Mikio; and Horiuchi, Susumu, 4,299,721, Cl. 252-628.000.
Inoue, Shigeki, 4,300,102, Cl. 330-254.000.
Nogami, Taro; and Hirose, Hiroshi, 4,299,486, Cl. 356-318.000.
Ogihara, Satoru; Ura, Mitsuru; and Suzuki, Yoshihiro, 4,299,873, Cl. 428-137.000.
Okabe, Michimasa; and Koyama, Shozi, 4,299,607, Cl. 62-13.000.
Sengoku, Masayuki; Honkawa, Tadashi; Kuroishi, Tadafumi; and Komori, Ritsuo, 4,299,487, Cl. 356-320.000.
Tanaka, Minoru; Itoh, Fumikazu; Saitoh, Hiroshi; Kobayashi, Takashi; Sasaki, Akiyoshi; and Akutsu, Norio, 4,299,023, Cl. 29-564.100.
Tanimura, Nobuyoshi; Fukuta, Hiroshi; Nishimura, Kotaro; and Yasui, Tokumasa, 4,300,213, Cl. 365-190.000.
Todo, Kenji; Miyanaka, Motoshi; and Tanaka, Toshio, 4,299,556, Cl. 431-29.000.
Yamane, Yoichi; Kamata, Tutomu; Ghonaka, Hiromu; and Takase, Mituo, 4,299,534, Cl. 415-9.000.
Hitachi Maxell, Ltd.: *See*—
Togawa, Fumio; Andoh, Haruo; and Tanabe, Toshihiko, 4,299,882, Cl. 428-329.000.
Hitachi Ome Electronic Co., Ltd.: *See*—
Tanimura, Nobuyoshi; Fukuta, Hiroshi; Nishimura, Kotaro; and Yasui, Tokumasa, 4,300,213, Cl. 365-190.000.
Hizo, Jozsef; and Duftschmid, Klaus, to Osterreichisches Forschungszentrum Seibersdorf GmbH. Secondary-standard ionization chamber, in particular for measuring the energy dose. 4,300,050, Cl. 250-374.000.
Hobart Corporation: *See*—
Athey, Stuart E.; and McCord, Dick P., 4,299,115, Cl. 73-15.00B.
Hochiki Corporation: *See*—
Arima, Takeo; and Furuyama, Akira, 4,300,132, Cl. 340-629.000.
Maruyama, Masaki, 4,300,099, Cl. 328-6.000.
Hodgson, R. W. Microscope stand for microscope optics and a mutually perpendicularly adjustable work stage in an intermediate focusing plane. 4,299,440, Cl. 350-81.000.
Hodkinson, Harold: *See*—
Hales, Eric C.; and Hodkinson, Harold, 4,299,426, Cl. 303-6.00C.
Hoechst Aktiengesellschaft: *See*—
Schrodter, Klaus; Ehlers, Klaus-Peter; and Mulder, Roelof, 4,299,803, Cl. 423-308.000.
Hof, Craig R.; Osio, Concepcion; and Ulin, Roy A., to Akzona Incorporated. Disposable reversible thermometer. 4,299,727, Cl. 252-408.000.
Hoffman, Simon J. Blade holder for saber saw. 4,299,402, Cl. 279-75.000.
Hoffmann, Alexander: *See*—
Pusch, Gunter; and Hoffmann, Alexander, 4,300,160, Cl. 358-113.000.
Hoffmann-La Roche Inc.: *See*—
Chan, Ka-Kong; and Pawson, Beverly A., 4,299,995, Cl. 568-649.000.
Confalone, Pasquale N.; Pizzolato, Giacomo; and Uskokovic, Milan R., 4,299,968, Cl. 549-68.000.
Fischli, Albert E.; and Szente, Andre, 4,299,767, Cl. 260-293.30D.
Fryer, Rodney I.; Trybulski, Eugene J.; and Walser, Armin, 4,299,971, Cl. 560-107.000.
Hansen, Hans J.; Myl, Alfred D.; and Vandevoorde, Jacques P., 4,299,815, Cl. 424-1.000.
Hofstein, Steven R., to World Medical Marketing Corporation. Foot exerciser. 4,299,206, Cl. 128-25.00B.
Hogen Esch, Johannes H. L., to Vitatron Scientific B.V. Apparatus for performing tests and measurements on liquid samples. 4,299,796, Cl. 422-63.000.
Hohl, Frank: *See*—
United States of America, National Aeronautics and Space Administration; Hohl, Frank; and De Young, Russell J., 4,300,106, Cl. 331-94.50C.
Hoke, Donald I., to Lubrizol Corporation, The. Epoxide or episulfide polymer-based hot melt metal working lubricants. 4,299,712, Cl. 252-52.00A.
Holbrook, George W.: *See*—
Hastings-James, Richard; and Holbrook, George W., 4,300,022, Cl. 179-115.5DV.
Holl, Wolfgang; Sester, Karl-Ekkehard; Eberle, Siegfried H.; and Southeimer, Heinrich, to Kernforschungszentrum Karlsruhe, Gmbh. Method for regenerating anion exchange resins in bicarbonate form. 4,299,922, Cl. 521-26.000.
Holland, Eddie L.: *See*—
White, Charles A.; and Holland, Eddie L., 4,299,191, Cl. 119-18.000.
Holmgren, Pahr O. A.: *See*—
Johansson, Ingvar H.; Sanden, Per-Olof; Holmgren, Pahr O. A.; and Johansson, Helle G., 4,299,074, Cl. 53-529.000.
Holstein, John H., to Holstein, John H. Turret drive system. 4,299,072, Cl. 53-306.000.
Holten, Jessie: *See*—
Fields, Johnell; and Holten, Jessie, 4,299,580, Cl. 434-335.000.
Holzapfel, Wolfgang, to Honeywell GmbH. Range and speed measuring equipment with noise frequency modulated transmitter. 4,299,484, Cl. 356-28.500.
Homberg, Otto A.: *See*—
Lynn, James B.; Laslo, Joseph A.; and Homberg, Otto A., 4,299,801, Cl. 423-228.000.
Honda Giken Kogyo Kabushiki Kaisha: *See*—
Nishikawa, Masao; Toshimitsu, Yoshihiko; Aoyama, Toshihiko; Takaoka, Tokuro; Aoki, Takashi; and Sato, Yoichi, 4,299,302, Cl. 180-148.000.

Honda, Kiyokazu: *See*—
Baba, Masaharu; Honda, Kiyokazu; Yoshiike, Yoshiji; and Hashima, Akiyoshi, 4,299,430, Cl. 339-17.00D.
Honeywell GmbH: *See*—
Holzapfel, Wolfgang, 4,299,484, Cl. 356-28.500.
Honeywell Inc.: *See*—
Ballinger, Dale O., 4,300,217, Cl. 367-140.000.
Diddens, Paul A.; and Humphrey, Robert E., 4,300,074, Cl. 315-401.000.
Marshall, Donald E., Jr., 4,300,062, Cl. 307-304.000.
Honeywell Information Systems Inc.: *See*—
Bradley, John J.; Miller, Robert C.; Miu, Ming T.; Shen, Jian-Kuo; and Staplin, Theodore R., Jr., 4,300,193, Cl. 364-200.000.
Bradley, John J.; Miu, Ming T.; and Shen, Jian-Kuo, 4,300,194, Cl. 364-200.000.
Couleur, John F.; and Montee, Robert F., 4,300,192, Cl. 364-200.000.
Neuhoff, Donald; Mones, Arthur H.; and Lam, Kit M., 4,299,876, Cl. 428-208.000.
Honkanen, Erkki J.: *See*—
Mustakallio, Kimmo K.; Pippuri, Aino K.; and Honkanen, Erkki J., 4,299,846, Cl. 424-331.000.
Honkawa, Tadashi: *See*—
Sengoku, Masayuki; Honkawa, Tadashi; Kuroishi, Tadafumi; and Komori, Ritsuo, 4,299,487, Cl. 356-320.000.
Hooker Chemicals & Plastics Corp.: *See*—
Robota, Stephen; McGregor, Alastair J. H.; and Trollope, Gregory A. R., 4,299,606, Cl. 62-28.000.
Tremmel, Robert A.; and Wieczerniak, Walter J., 4,299,671, Cl. 204-35.00R.
Horbach, Alfred: *See*—
Weirauch, Kurt; Horbach, Alfred; and Vernaleken, Hugo, 4,299,948, Cl. 528-171.000.
Horii, Hirokazu; and Sasai, Koji, to Nissan Motor Company, Limited. Alarm device for an odometer. 4,300,117, Cl. 340-52.00D.
Horiuchi, Susumu: *See*—
Hirano, Mikio; and Horiuchi, Susumu, 4,299,721, Cl. 252-628.000.
Horiuchi, Toshiaki: *See*—
Kato, Masaru; Takeuchi, Hitoshi; and Horiuchi, Toshiaki, 4,299,889, Cl. 428-569.000.
Horstmann, Winfried: *See*—
Sochor, Josef; Horstmann, Winfried; and Foerster, Hubert, 4,300,172, Cl. 360-33.000.
Hosaki, Yoshihiko: *See*—
Nakayasu, Kazuo; Furuya, Osamu; and Hosaki, Yoshihiko, 4,299,978, Cl. 562-554.000.
Hoshi, Hideaki: *See*—
Ando, Ryo; Araki, Shigeru; Hoshi, Hideaki; and Sato, Kazuyoshi, 4,299,610, Cl. 65-19.000.
Hoskinson, William R.; and Carley, Joseph C., to Wurlitzer Company, The. Touch responsive envelope control for electronic musical instrument. 4,299,153, Cl. 84-1.100.
Hosogai, Takeo: *See*—
Omura, Yoshiaki; Mori, Fumio; Fujita, Yoshiji; Nishida, Takashi; Hosogai, Takeo; Aihara, Sukeji; Tamai, Yoshin; Wada, Fumio; and Itoi, Kazuo, 4,299,839, Cl. 424-274.000.
Hotset Heizpatronen und Zubehor GmbH, Firma: *See*—
Schwarzkopf, Eugen, 4,300,038, Cl. 219-544.000.
Hough, James W.: *See*—
Golicz, Roman M.; Gunther, William H., Jr.; and Hough, James W., 4,299,073, Cl. 53-493.000.
Howard, Edward G., Jr.: *See*—
England, David C.; and Howard, Edward G., Jr., 4,299,949, Cl. 528-220.000.
Howard, Graham: *See*—
Philip, Alexander S.; Parkinson, Allen; Foston, Michael G.; Rees, Frederick H.; Howard, Graham; and Shuttleworth, Anthony E., 4,300,230, Cl. 370-63.000.
Howard, James K.; and White, James F., to International Business Machines Corporation. Gold-tantalum-titanium/tungsten alloy contact for semiconductor devices and having a gold/tantalum intermetallic barrier region intermediate the gold and alloy elements. 4,300,149, Cl. 357-71.000.
Howe, Bernd: *See*—
Karmann, Werner; Weidehaas, Gerd; Howe, Bernd; and Piel, Frank, 4,299,231, Cl. 128-639.000.
Howell, Robert G., to TRW, Inc. Temperature sensitive electrical element, and method and material for making the same. 4,299,887, Cl. 428-428.000.
Howell, Stephen L.: *See*—
Dietrich, Ralph N.; Howell, Stephen L.; and Robinson, John W., 4,299,154, Cl. 84-1.030.
HPM Corporation: *See*—
Nunn, Robert E., 4,299,792, Cl. 264-328.180.
Hrytzak, Bernard J. Paint can attachment. 4,299,340, Cl. 222-189.000.
Hsu, Chao-Yang; and Kesling, Haven S., Jr., to Atlantic Richfield Company. Preparation of unsaturated diester precursor for sebacic acid. 4,299,976, Cl. 560-190.000.
Hubinger Co., The: *See*—
Venkatasubramanian, Kalyanasundram; Jain, Surendar M.; and Giuffrida, Anthony J., 4,299,677, Cl. 204-180.00P.
Huchital, Gerald S.; and Gianzero, Stanley, to Schlumberger Technology Corporation. Microwave electromagnetic logging with mudcake correction. 4,300,098, Cl. 324-338.000.
Huck Manufacturing Company: *See*—
Corbett, Robert J., 4,299,519, Cl. 411-361.000.
Hudson, Robert J., to Molins Limited. Data-storage devices and bistable circuits therefor. 4,300,211, Cl. 365-110.000.
Hudson, Walter A.: *See*—
Seelenbinder, Terry G.; and Hudson, Walter A., 4,299,472, Cl. 354-318.000.
Huffman, William F.; and Yim, Nelson C., to SmithKline Corporation. Method for preparing lower alkyl β-(S-benzylmercapto)-β,β-pentamethylenepropionates. 4,299,969, Cl. 560-9.000.
Hug, Niklaus, to Rommag P. Worwag & Co. Vacuum cleaner for professional and household purposes. 4,299,007, Cl. 15-339.000.
Huggins, Raymond W., to Xerox Corporation. Method of development. 4,299,901, Cl. 430-122.000.
Hughes Aircraft Company: *See*—
Gentile, Anthony L.; Bowers, John L.; and Stafsudd, Oscar M., 4,299,649, Cl. 156-610.000.
Hughes, William F., to Australian Agricultural Machinery Pty. Ltd. Folding boom construction including rollers and ramps for lifting wheels clear of ground. 4,299,292, Cl. 172-311.000.
Hulet, Frank A.: *See*—
Friesen, Wilmer J.; and Hulet, Frank A., 4,299,269, Cl. 164-324.000.
Hull, Charles J.: *See*—
Knodt, Ruediger W.; Charland, Terrence D.; Hull, Charles J.; Hutton, James E.; Webb, John L.; and Yonovich, John R., 4,299,478, Cl. 355-3.00R.
Humble, David R., to Sensormatic Electronics Corporation. Reusable theft deterrent security tag. 4,299,870, Cl. 428-101.000.
Hummer, Robert F.: *See*—
United States of America, National Aeronautics and Space Administration; Hummer, Robert F.; and Upton, Deane T., 4,300,159, Cl. 358-109.000.
Humphrey, John R., to International Packaging Machines, Inc. Wrapping apparatus and method. 4,299,076, Cl. 53-587.000.
Humphrey, Robert E.: *See*—
Diddens, Paul A.; and Humphrey, Robert E., 4,300,074, Cl. 315-401.000.
Humphrey, Troy G.: *See*—
Harris, Robert H.; Humphrey, Troy G.; and Stimson, John J., Jr., 4,299,081, Cl. 56-330.000.
Hung, Ling K.; and Bloom, Allen, to RCA Corporation. Water-based photoresists using stilbene compounds as crosslinking agents. 4,299,910, Cl. 430-270.000.
Hunter, Wood E.: *See*—
Chan, Marie S.; and Hunter, Wood E., 4,299,965, Cl. 548-257.000.
Hurd, Wayne. Safety light. 4,300,186, Cl. 362-66.000.
Huron Chemicals Limited: *See*—
Casson, Harold V.; Crabtree, Grant G.; Kindl, Bruno; and Noonan, Edward B., 4,299,869, Cl. 428-35.000.
Huston, Larry; Morrison, Clifton H.; Rasmussen, Glenn; and Tsuchiya, Takuzo, to General Mills, Inc. Method and apparatus for severing portions from a plurality of frozen columns of fish or the like. 4,299,150, Cl. 83-110.000.
Huttenes-Albertus Chemische Werke GmbH: *See*—
Born, Thorwald, 4,299,751, Cl. 260-30.40N.
Hutter, Josef; and Goller, Heinz, to Chemie Linz Aktiengesellschaft. Process for the preparation of raw mix for the production of cement and sulphuric acid. 4,299,634, Cl. 106-103.000.
Hutton, James E.: *See*—
Knodt, Ruediger W.; Charland, Terrence D.; Hull, Charles J.; Hutton, James E.; Webb, John L.; and Yonovich, John R., 4,299,478, Cl. 355-3.00R.
Huxel, Edward: *See*—
Wallen, Fred L.; and Huxel, Edward, 4,299,850, Cl. 426-124.000.
Hwang, Ki-Sup, to Mead Corporation, The. Infrared absorptive jet printing ink. 4,299,630, Cl. 106-22.000.
Hy-Way Heat Systems, Inc.: *See*—
Miller, John H., 4,299,194, Cl. 122-33.000.
Hydril Company: *See*—
Burton, James A., 4,299,253, Cl. 138-30.000.
Hyzak, Daniel L., to Stauffer Chemical Company. Herbicide compositions of extended soil life. 4,299,616, Cl. 71-100.000.
I.S.O.: *See*—
Teyssier, Gerard; and Lepant, Marcel, 4,299,809, Cl. 423-497.000.
Ibach, Harald; Froitzheim, Hermann; Bruchmann, Heinz-Dieter; and Lehwald, Sieghard, to Kernforschungsanlage Julich Gesellschaft mit beschrankter Haftung. Beam guidance for electron beam tests, and electron impact spectrometer having such beam guidance. 4,300,045, Cl. 250-305.000.
Ibrahim, Fayez F., to Tyler Refrigeration Corporation. Energy conserving refrigerated merchandiser display case. 4,299,092, Cl. 62-81.000.
Ichikawa, Kiyomichi, to Canon Kabushiki Kaisha. Sheet sorting and stacking apparatus. 4,299,382, Cl. 271-287.000.
Ichizawa, Yoshiyuki: *See*—
Suzuki, Sadao; Ichizawa, Yoshiyuki; and Seki, Nobuichi, 4,299,549, Cl. 425-214.000.
ICL/Scientific: *See*—
Parker, James E., 4,299,441, Cl. 330-95.000.
Igel, Wolfgang; Freibichler, Franz; Fehr, Werner; and Pfeifer, Willi, to Zinser Textilmaschinen GmbH, Firma. Wrap-winding spinning machine. 4,299,083, Cl. 57-18.000.
Ignatenko, Alexandr G.: *See*—
Azbukin, Vladimir G.; Balandin, Jury F.; Gorynin, Igor V.; Gluskin, Lev Y.; Zvezdin, Jury I.; Ignatenko, Alexandr G.; Krasnov, Alexandr N.; Melekhov, Rostislav K.; Osipova, Inna S.; Pavlov, Valery N.; Khokhlov, Alexandr A.; Stepanov, Ivan A.; Anfimov, Alexandr F.; Ardentov, Vasily V.; Burmakin, Viktor M.;

Ignatov, Viktor A.; Rokhlin, Eduard A.; and Zhitkov, Vladimir V., 4,299,623, Cl. 75-128.00R.
Ignatov, Viktor A.: *See*—
Azbukin, Vladimir G.; Balandin, Jury F.; Gorynin, Igor V.; Gluskin, Lev Y.; Zvezdin, Jury I.; Ignatenko, Alexandr G.; Krasnov, Alexandr N.; Melekhov, Rostislav K.; Osipova, Inna S.; Pavlov, Valery N.; Khokhlov, Alexandr A.; Stepanov, Ivan A.; Anfimov, Alexandr F.; Ardentov, Vasily V.; Burmakin, Viktor M.; Ignatov, Viktor A.; Rokhlin, Eduard A.; and Zhitkov, Vladimir V., 4,299,623, Cl. 75-128.00R.
Ikeda, Akira: *See*—
Takeyama, Tetsu; Azuma, Kenkoku; Ikeda, Akira; Yamamoto, Toshie; and Katsurada, Shigeho, 4,299,599, Cl. 55-180.000.
Ikemori, Keiji, to Canon Kabushiki Kaisha. Zoom lens having two movable lens groups. 4,299,452, Cl. 350-426.000.
Ilardi, Joseph M.; Waggener, Richard W.; and Frint, William R., to Intermountain Research & Develop. Corp. Carbon treatment of monohydrate crystallizer liquor. 4,299,799, Cl. 423-206.00T.
Image Graphics, Inc.: *See*—
Tarnowski, Andrew A., 4,300,147, Cl. 346-159.000.
Imai, Tamotsu: *See*—
Dodds, Alan R.; and Imai, Tamotsu, 4,299,989, Cl. 568-397.000.
Imamura, Junji, to Mitsuboshi Belting Ltd. V-Belt. 4,299,587, Cl. 474-262.000.
Imatomi, Eiji; and Goda, Kensuke, to Fuji Photo Film Co., Ltd. Silver halide photographic light-sensitive material. 4,299,909, Cl. 430-264.000.
Imperial Chemical Industries Limited: *See*—
Candlin, John P.; Wilson, Keith C.; and Pearce, Ronald, 4,299,936, Cl. 526-119.000.
Whittam, Thomas V., 4,300,013, Cl. 585-481.000.
Inaba, Hajimu; and Inagaki, Shigemi, to Fujitsu Fanuc Limited. Automated device. 4,299,529, Cl. 414-590.000.
Inada, Kazutoshi: *See*—
Shimizu, Masayuki; Suzuki, Keiichi; and Inada, Kazutoshi, 4,299,559, Cl. 432-13.000.
Inagaki, Shigemi: *See*—
Inaba, Hajimu; and Inagaki, Shigemi, 4,299,529, Cl. 414-590.000.
Inami, Yasuhiko: *See*—
Nakauchi, Hiroshi; Koyanagi, Katubumi; Kato, Hiroaki; Takafuji, Yutaka; Inami, Yasuhiko; and Uede, Hisashi, 4,300,138, Cl. 340-785.000.
Inamine, Shigeo: *See*—
Ueno, Ryuzo; Matsuda, Toshio; Kanayama, Tatsuo; Tomiyasu, Kunihiko; Fujita, Yatsuka; and Inamine, Shigeo, 4,299,852, Cl. 426-266.000.
Industrie Pirelli, S.p.A.: *See*—
Previati, Augusto, 4,299,552, Cl. 425-371.000.
Tarantola, Luciano, 4,299,082, Cl. 57-9.000.
Inoue, Shigeki, to Hitachi, Ltd. Variable gain control circuit. 4,300,102, Cl. 330-254.000.
Insalaco, Robert W.: *See*—
Phillips, Earl G.; and Insalaco, Robert W., 4,299,221, Cl. 128-276.000.
Insall, John N.: *See*—
Burstein, Albert H.; and Insall, John N., 4,298,992, Cl. 3-1.911.
Institut de Recherche des Transports: *See*—
Pascal, Jean-Pierre, 4,300,078, Cl. 318-49.000.
Institut de Recherches de la Siderurgie Francaise: *See*—
Birat, Jean-Pierre; and Vedda, Louis, 4,299,267, Cl. 164-502.000.
Institut Francais du Petrole: *See*—
Cohen, Georges; and Rojey, Alexandre, 4,299,093, Cl. 62-101.000.
Mikitenko, Paul; and Asselineau, Lionel, 4,299,999, Cl. 568-697.000.
Institut Pasteur: *See*—
Aubert, Jean P.; Gasser, Francis; and Longin, Robert, 4,299,858, Cl. 426-656.000.
Popoff, Michel; Brochon, Marie-Jose; and Brault, Georges, 4,299,918, Cl. 435-30.000.
Institute for Industrial Research and Standards, The: *See*—
Cleary, Sean J.; and Furlong, Noel L., 4,299,001, Cl. 10-133.000.
Instrumentation Laboratory Inc.: *See*—
Cormier, Alan D.; Feil, Marvin; and Legg, Kenneth D., 4,299,728, Cl. 252-408.000.
Kelley, Thomas F.; Mody, Dinesh I.; and Mountain, Charles F., 4,299,794, Cl. 422-68.000.
Intel Magnetics, Inc.: *See*—
Washburn, Hudson A., 4,300,209, Cl. 365-8.000.
Interlake, Inc.: *See*—
Lord, John J., 4,299,496, Cl. 356-446.000.
Intermedics, Inc.: *See*—
Weiss, Lee E.; and Dalton, Michael J., 4,299,239, Cl. 128-785.000.
Intermountain Research & Develop. Corp.: *See*—
Ilardi, Joseph M.; Waggener, Richard W.; and Frint, William R., 4,299,799, Cl. 423-206.00T.
International Business Machines Corporation: *See*—
Belleson, James G.; Disbrow, John R.; and Eiselen, Everett T., 4,300,206, Cl. 364-900.000.
Chakravarti, Satya N.; Heller, Lawrence G.; and Pricer, Wilbur D., 4,300,210, Cl. 365-45.000.
Clark, Roger J.; and Kennison, Robert E., 4,299,866, Cl. 427-255.600.
Howard, James K.; and White, James F., 4,300,149, Cl. 357-71.000.
Pickart, Don E.; Reed, Philip W.; and Vranka, Joseph S., 4,299,888, Cl. 428-457.000.
Pipkin, David J.; and Schaefer, Donald W., 4,299,186, Cl. 118-407.000.
Wilzbach, Bernard L., 4,299,474, Cl. 355-3.0DR.
International Harvester Company: *See*—
Gagliani, John, 4,299,787, Cl. 264-41.000.
International Laser Systems, Inc.: *See*—
Benckert, Willis J.; and Wangler, Richard J., 4,299,393, Cl. 273-310.000.
International Packaging Machines, Inc.: *See*—
Humphrey, John R., 4,299,076, Cl. 53-587.000.
International Synthetic Rubber Co., Ltd.: *See*—
Berg, Lloyd, 4,299,668, Cl. 203-51.000.
International Telephone and Telegraph Corporation: *See*—
De Stefanis, Vincent A.; and Turner, Earl W., 4,299,848, Cl. 426-20.000.
Internationale Octrooi Maatschappij "OCTROPA" B.V.: *See*—
Belder, Eimbert G.; Legg, John C.; and van der Linde, Robert, 4,299,742, Cl. 260-22.0EP.
Intimate Jewels, Inc.: *See*—
Block, Alvin, 4,299,101, Cl. 63-12.000.
Inventive Technology International, Inc.: *See*—
McSpadden, John T., 4,299,571, Cl. 433-102.000.
Ionics, Inc.: *See*—
Venkatasubramanian, Kalyanasundram; Jain, Surendar M.; and Giuffrida, Anthony J., 4,299,677, Cl. 204-180.00P.
Iribarne, Julio V.; and Thomson, Bruce A. Method and apparatus for the analysis of chemical compounds in aqueous solution by mass spectroscopy of evaporating ions. 4,300,044, Cl. 250-282.000.
Irving, Edward: *See*—
Green, George E.; and Irving, Edward, 4,299,938, Cl. 526-192.000.
Isaka, Takuji: *See*—
Nomura, Takao; Taguchi, Yoshio; Nagata, Kozaburo; and Isaka, Takuji, 4,299,924, Cl. 521-131.000.
Isayama, Shogo; and Takehara, Nobumitsu, to Fuji Photo Film Co., Ltd. Coating apparatus. 4,299,188, Cl. 118-412.000.
Isayama, Takuro; Yamazaki, Hiroshi; Komai, Hiromichi; and Sato, Tsutomu, to Ricoh Co., Ltd. Multiple-nozzle ink-jet recording apparatus. 4,300,144, Cl. 346-140.00R.
Ishihara, Taketoshi: *See*—
Aoki, Mitsugu; Oana, Yoshinori; Kato, Yasuo; and Ishihara, Taketoshi, 4,299,455, Cl. 351-30.000.
Ishii, Tadashi, to Kobishi Electric Co., Ltd. Motor actuated bell. 4,300,128, Cl. 340-392.000.
Ishii, Teruaki: *See*—
Sugimoto, Hiroshi; Karasawa, Shinji; Noshi, Kisuke; Ishii, Teruaki; and Matsuzawa, Sigeki, 4,299,259, Cl. 141-1.100.
Ishii, Toshiaki: *See*—
Wada, Takanori; Sano, Hitoshi; Sato, Shigekatsu; Saiki, Yukihiro; Shimizu, Keisuke; Hirata, Masanori; Naka, Junichi; Takahashi, Takayoshi; Ishii, Toshiaki; and Kamiki, Toshikazu, 4,299,855, Cl. 426-512.000.
Ishikawa, Asao. Watertight RF connector. 4,299,434, Cl. 339-96.000.
Ishikawa, Atsuo: *See*—
Iwata, Riso; Ishikawa, Atsuo; and Komai, Hisataka, 4,299,950, Cl. 528-306.000.
Ishikawa, Kohji: *See*—
Maruyama, Hiromi; Tokuno, Takashi; Shimizu, Masao; Ishikawa, Kohji; Narumi, Naoaki; and Ghguchi, Osamo, 4,300,234, Cl. 371-27.000.
Ishikawa, Kunio: *See*—
Kato, Masashi; Obata, Hirozo; Hirata, Minoru; Matsukuma, Hitoshi; Ishikawa, Kunio; and Tanaka, Junichi, 4,299,108, Cl. 72-178.000.
Ishikawajima-Harima Jukogyo Kabushiki Kaisha: *See*—
Nakamura, Norio; Tominaga, Satoshi; and Kawata, Takashi, 4,299,560, Cl. 432-36.000.
Israel, Mervyn; and Potti, Gopalakrishnan, to Sidney Farber Cancer Institute, Inc. N-Trifluoroacetyladriamycin-14-O-hemiglutarate and -hemiadipate and therapeutic compositions containing same. 4,299,822, Cl. 424-180.000.
ITI, Limited: *See*—
Mougin, Georges L., 4,299,184, Cl. 114-253.000.
Ito, Akitoshi: *See*—
Sakano, Hajime; Kodama, Mikio; Ito, Akitoshi; and Terada, Miyuki, 4,299,929, Cl. 525-67.000.
Ito, Noboru; Sakamoto, Eiichi; Kawasaki, Mikio; and Uchida, Takashi, to Konishiroku Photo Industry Co., Ltd. Method for forming a negative image. 4,299,908, Cl. 430-244.000.
Ito, Yasuro; Higuchi, Yoshiro; Mochida, Yutaka; Kemmochi, Sampei; Kaga, Hideharu; and Yamamoto, Yasuhiro, to Ito, Yasuro; and Taisei Corporation. Method of preparing green compositions containing a hydraulic substance and method of utilizing the same. 4,299,633, Cl. 106-97.000.
Itoh, Fumikazu: *See*—
Tanaka, Minoru; Itoh, Fumikazu; Saitoh, Hiroshi; Kobayashi, Takashi; Sasaki, Akiyoshi; and Akutsu, Norio, 4,299,023, Cl. 29-564.100.
Itoh, Masanori: *See*—
Hashizume, Yoshio; Itoh, Masanori; Sakai, Yasumasa; and Kamita, Akiyosi, 4,299,748, Cl. 260-29.6RW.
Itoi, Kazuo: *See*—
Omura, Yoshiaki; Mori, Fumio; Fujita, Yoshiji; Nishida, Takashi; Hosogai, Takeo; Aihara, Sukeji; Tamai, Yoshin; Wada, Fumio; and Itoi, Kazuo, 4,299,839, Cl. 424-274.000.
Ittel, Jean-Michel: *See*—
Barbier, Daniel; Ittel, Jean-Michel; and Poujois, Robert, 4,300,048, Cl. 250-338.000.

Iwasaki, Motoaki: *See*—
Matsuda, Akira; Goshima, Norio; Yasuda, Shigeo; Iwasaki, Motoaki; and Nishino, Hiroshi, 4,300,118, Cl. 340-58.000.
Iwase, Takayuki: *See*—
Watanabe, Tomoyoshi; Nakai, Toshio; Kuzuya, Susumu; Onoda, Hiroshi; Asai, Akira; Iwase, Takayuki; and Nakamura, Kazuo, 4,299,503, Cl. 400-161.500.
Iwaski, Dean H.: *See*—
Baidwan, Balinderjeet S.; and Iwaski, Dean H., 4,299,238, Cl. 128-763.000.
Iwata Bolt Kogyo Kabushiki Kaisha: *See*—
Iwata, Yukichi, 4,299,520, Cl. 411-437.000.
Iwata, Riso; Ishikawa, Atsuo; and Komai, Hisataka, to Nippon Zeon Co. Ltd. Unsaturated polyester resin composition. 4,299,950, Cl. 528-306.000.
Iwata, Yukichi, to Iwata Bolt Kogyo Kabushiki Kaisha. Drive nut. 4,299,520, Cl. 411-437.000.
J. B. Foote Foundry Co., The: *See*—
Roy, Richard H.; and Edwards, Douglas F., 4,299,134, Cl. 74-473.00R.
J. C. Kinley Company: *See*—
Kinley, John C.; Dieckman, Harry E.; and Anderson, Clifford E., 4,299,033, Cl. 33-178.00P.
J. C. Penney Company, Inc.: *See*—
Bertschi, Hans G., 4,299,067, Cl. 52-127.000.
Jabs, Gert: *See*—
Dahm, Manfred; Jabs, Gert; Koglin, Bernd; Schnoring, Hildegard; and Riecke, Kurt, 4,299,723, Cl. 252-316.000.
Jagenberg-Werke A.G.: *See*—
Dropczynski, Hartmut; and Dienst, Manfred, 4,299,358, Cl. 242-55.000.
Jager, Horst, to Bayer Aktiengesellschaft. Azo reactive dyestuffs. 4,299,764, Cl. 260-153.000.
Jain, Sulekh C.; and Forkey, Paul W., to Wyman-Gordon Company. Valve system. 4,299,338, Cl. 222-152.000.
Jain, Surendar M.: *See*—
Venkatasubramanian, Kalyanasundram; Jain, Surendar M.; and Giuffrida, Anthony J., 4,299,677, Cl. 204-180.00P.
James Howden America, Inc.: *See*—
Del Bagno, Anthony C., Sr., 4,299,272, Cl. 165-66.000.
James, Trevor M. Fire-extinguishing or fire-preventive composition. 4,299,708, Cl. 252-2.000.
Janin, Pierre. Random motion mechanisms. 4,299,301, Cl. 180-6.500.
Janome Sewing Machine Co., Ltd.: *See*—
Kume, Toshiaki; Kakinuma, Toshihide; Makabe, Hachiro; Watanabe, Kazuo; and Takenoya, Hideaki, 4,299,180, Cl. 112-158.00E.
Tanaka, Yoshikazu, 4,299,182, Cl. 112-277.000.
Jansen, Martin B., to Amtel, Inc. Hydrocarbon production terminal. 4,299,260, Cl. 141-311.00R.
Jansson, Knut E. M.: *See*—
Johansson, Sven H.; and Jansson, Knut E. M., 4,300,111, Cl. 336-96.000.
Japanese National Railways: *See*—
Arima, Kazutaka; and Kitano, Yoshiyuki, 4,299,173, Cl. 104-284.000.
Jasmin, James L.; and Kruger, Lawrence M., to Control Data Corporation. Controlling which of two addresses is used by a microcode memory. 4,300,208, Cl. 364-900.000.
Jayne, Max L., to GTE Products Corporation. Cable connector. 4,299,433, Cl. 339-91.00R.
Jellinek, Max, to St. Louis University. Perfusate redox potential controller. 4,299,919, Cl. 435-283.000.
Jenkins, Harry H., Jr., to Atari, Inc. Compound anamorphic mirror and frame for off-axis reflected image modification. 4,299,446, Cl. 350-296.000.
Jensen, Jorgen M., to Ejnar Jensen & Son A/S. Apparatus for spreading and feeding of articles of flatwork. 4,299,521, Cl. 414-13.000.
Jidosha Kiki Co., Ltd.: *See*—
Masaka, Mitusuke, 4,299,544, Cl. 417-417.000.
Johann Baptist Rombach GmbH & Co. KG: *See*—
Happe, Peter, 4,299,250, Cl. 137-546.000.
Johannsen, Donald R., to Wideview Scope Mount Corporation. Telescopic sight mount for firearms. 4,299,044, Cl. 42-1.0ST.
Johansson, Helle G.: *See*—
Johansson, Ingvar H.; Sanden, Per-Olof; Holmgren, Pahr O. A.; and Johansson, Helle G., 4,299,074, Cl. 53-529.000.
Johansson, Ingvar H.; Sanden, Per-Olof; Holmgren, Pahr G. A.; and Johansson, Helle G., to AB Maskinarbeten; and Gullfiber AB. Method and apparatus for compressing voluminous material easy to compress. 4,299,074, Cl. 53-529.000.
Johansson, Rune L., to Thermal Dynamics Corporation. Welding apparatus with time interval control. 4,300,035, Cl. 219-130.210.
Johansson, Rune L., to Thermal Dynamics Corporation. Welding apparatus with arc interval energy control. 4,300,036, Cl. 219-130.330.
Johansson, Sven H.; and Jansson, Knut E. M. Device in ignition coils. 4,300,111, Cl. 336-96.000.
John, Kamar P.: *See*—
Klein, Helmut; and John, Kamar P., 4,299,667, Cl. 203-42.000.
John, Richard A.: *See*—
Olowinski, Edward J.; and John, Richard A., 4,299,085, Cl. 57-130.000.
Johnson Controls, Inc.: *See*—
Colla, Jeannine G., 4,300,184, Cl. 361-397.000.
Johnson, Jeffrey: *See*—
Milutzki, Udo; Schotte, Dietwald; and Johnson, Jeffrey, 4,300,228, Cl. 369-216.000.
Johnson, Matthey & Co., Limited: *See*—
Enga, Bernard E., 4,299,192, Cl. 122-4.00D.
Jones, Charles H., to Westinghouse Electric Corp. Wide angle acoustic camera. 4,300,215, Cl. 367-11.000.
Jones, David C.; and Bredahl, Timothy D., to Minnesota Mining and Manufacturing Company. Removable pavement-marking sheet material. 4,299,874, Cl. 428-143.000.
Jonkers, Thomas M., to Stork Brabant B.V. Squeegee for screen printing machine. 4,299,164, Cl. 101-120.000.
Jonsen, Ake: *See*—
Hagberg, Lars; and Jonsen, Ake, 4,299,189, Cl. 118-675.000.
Joyal, Arthur B., to Raytheon Company. Bowed elastomeric window. 4,300,219, Cl. 367-174.000.
Jukola, Eero. Soft-cover paperback book and a method of manufacturing such a book. 4,299,410, Cl. 281-21.00R.
Junker, Erwin. Device for the production of gear wheels. 4,299,062, Cl. 51-206.00P.
Kabat, Richard W.: *See*—
Brockman, George T.; Garavalia, Thomas A.; and Kabat, Richard W., 4,299,535, Cl. 415-160.000.
Kabushiki Kaisha Seikosha: *See*—
Oda, Hajime; Moritani, Nakanobu; and Samejima, Toshihide, 4,300,221, Cl. 368-22.000.
Kabushiki Kaisha Suwa Seikosha: *See*—
Nakazaki, Yasunori; and Asakawa, Tatsushi, 4,300,224, Cl. 368-201.000.
Kabushiki Kaisha Toyoda Jidoshokki Seisakusho: *See*—
Seiki, Kazuo; Katoh, Takashi; and Yoshida, Yoshiaki, 4,299,084, Cl. 57-58.890.
Kabushiki Kaisha Toyota Chuo Kenkyusho: *See*—
Fujitani, Yoshiyasu; Muraki, Hideaki; Kondoh, Shiroh; Tomita, Makoto; Yokota, Kouji; and Sobukawa, Hideo, 4,299,734, Cl. 252-462.000.
Kabushiki Kaisha Wako: *See*—
Kondo, Kazuyoshi; and Nakamura, Yoshiaki, 4,299,112, Cl. 72-354.000.
Kabushiki Kaishaveno Seiyakuoyo Kenkyojo: *See*—
Ueno, Ryuzo; Matsuda, Toshio; Kanayama, Tatsuo; Tomiyasu, Kunihiko; Fujita, Yatsuka; and Inamine, Shigeo, 4,299,852, Cl. 426-266.000.
Kachur, Nicholas W.: *See*—
Tomburo, Anthony F.; and Kachur, Nicholas W., 4,299,372, Cl. 249-107.000.
Kadoi, Sho: *See*—
Aya, Toshihiko; Sasagawa, Takashi; and Kadoi, Sho, 4,299,945, Cl. 528-126.000.
Kaga, Hideharu: *See*—
Ito, Yasuro; Higuchi, Yoshiro; Mochida, Yutaka; Kemmochi, Sampei; Kaga, Hideharu; and Yamamoto, Yasuhiro, 4,299,633, Cl. 106-97.000.
Kagaya, Mineo: *See*—
Sugiura, Kensuke; Kagaya, Mineo; Aoki, Hiroyuki; and Takehara, Takeitiro, 4,299,714, Cl. 252-73.000.
Kakinuma, Toshihide: *See*—
Kume, Toshiaki; Kakinuma, Toshihide; Makabe, Hachiro; Watanabe, Kazuo; and Takenoya, Hideaki, 4,299,180, Cl. 112-158.00E.
Kako, Hiroyoshi; and Arai, Hajime, to Toyota Jidosha Kogyo Kabushiki Kaisha. Transfer device for four wheel drive. 4,299,140, Cl. 74-665.00G.
Kalan, Joseph F. Fireplace ash cleaning shovel. 4,299,419, Cl. 294-55.000.
Kamata, Shigeru: *See*—
Momiyama, Kikuo; and Kamata, Shigeru, 4,299,453, Cl. 350-426.000.
Kamata, Tutomu: *See*—
Yamane, Yoichi; Kamata, Tutomu; Ohonaka, Hiromu; and Takase, Mituo, 4,299,534, Cl. 415-9.000.
Kamberg, Eduard, to New Super Laundry Machine Co. Control circuit for combustion systems. 4,299,555, Cl. 431-20.000.
Kameda, Takashi: *See*—
Shibatani, Haruo; Ogomori, Yuji; Kameda, Takashi; and Yanagi, Yoshio, 4,300,002, Cl. 568-817.000.
Kamiki, Toshikazu: *See*—
Wada, Takanori; Sano, Hitoshi; Sato, Shigekatsu; Saiki, Yukihiro; Shimizu, Keisuke; Hirata, Masanori; Naka, Junichi; Takahashi, Takayoshi; Ishii, Toshiaki; and Kamiki, Toshikazu, 4,299,855, Cl. 426-512.000.
Kamita, Akiyosi: *See*—
Hashizume, Yoshio; Itoh, Masanori; Sakai, Yasumasa; and Kamita, Akiyosi, 4,299,748, Cl. 260-29.6RW.
Kamiya, Takashi; and Takaya, Takao, to Fujisawa Pharmaceutical Co., Ltd. 2-Lower alkyl-7-substituted-2 or 3-cephem 4-carboxylic acid compounds. 4,299,829, Cl. 424-246.000.
Kammerer, Werner: *See*—
Knapp, Heinrich; Sauer, Rudolf; Romann, Peter; Hafner, Udo; Wilfert, Thomas; and Kammerer, Werner, 4,299,124, Cl. 73-204.000.
Kammermaier, Johann: *See*—
Heuwieser, Erwin; Kammermaier, Johann; and Roedl, Peter, 4,299,126, Cl. 73-295.000.
Kamogawa, Hiroshi: *See*—
Sagae, Kyuta; Tanabe, Susumu; and Kamogawa, Hiroshi, 4,299,217, Cl. 128-214.400.

Kanayama, Tatsuo: *See—*
Ueno, Ryuzo; Matsuda, Toshio; Kanayama, Tatsuo; Tomiyasu, Kunihiko; Fujita, Yatsuka; and Inamine, Shigeo, 4,299,852, Cl. 426-266.000.
Kaneko, Katsumi: *See—*
Nishikawa, Eiichiro; Shinya, Masuo; Furukawa, Hiroshi; and Kaneko, Katsumi, 4,299,800, Cl. 423-219.000.
Kaneko, Mitsuyoshi: *See—*
Masuno, Kouji; Nakayama, Junji; Mizoguchi, Yukio; and Kaneko, Mitsuyoshi, 4,299,652, Cl. 162-30.00K.
Kara, Frederick E.: *See—*
Miller, Kirk D.; Flood, John B.; Dimou, George; Kara, Frederick E.; and Amos, Richard W., 4,299,624, Cl. 75-130.00R.
Karasawa, Shinji: *See—*
Sugimoto, Hiroshi; Karasawa, Shinji; Noshi, Kisuke; Ishii, Teruaki; and Matsuzawa, Sigeki, 4,299,259, Cl. 141-1.100.
Karl Schaeff GmbH & Co.: *See—*
Schaeff, Hans, 4,299,530, Cl. 414-719.000.
Karmann, Werner; Weidehaas, Gerd; Howe, Bernd; and Piel, Frank, to Beiersdorf Aktiengesellschaft. Electrically conductive, visco-elastic gel and its use in electrode. 4,299,231, Cl. 128-639.000.
Karube, Isao: *See—*
Obana, Haruo; Shirakawa, Tadashi; Hikuma, Motohiko; Yasuda, Takeo; Karube, Isao; and Suzuki, Shuichi, 4,299,669, Cl. 204-1.00T.
Katagiri, Shigenobu: *See—*
Monma, Hisayoshi; and Katagiri, Shigenobu, 4,300,085, Cl. 318-696.000.
Katayama, Nobuaki, to Toyota Jidosha Kogyo Kabushiki Kaisha. Synchro-mesh type gear transmission. 4,299,317, Cl. 192-53.00F.
Kato, David S., to Ford Aerospace & Communications Corporation. Self synchronized multiplexer/demultiplexer. 4,300,232, Cl. 370-100.000.
Kato, Hiroaki: *See—*
Nakauchi, Hiroshi; Koyanagi, Katobumi; Kato, Hiroaki; Takafuji, Yutaka; Inami, Yasuhiko; and Uede, Hisashi, 4,300,138, Cl. 340-785.000.
Kato, Kiyoshi. Fire extinguisher having a heat fusible member under compression. 4,299,289, Cl. 169-57.000.
Kato, Masaru; Takeuchi, Hitoshi; and Horiuchi, Toshiaki, to Mitsubishi Denki Kabushiki Kaisha. Contact for vacuum interrupter. 4,299,889, Cl. 428-569.000.
Kato, Masashi; Obata, Hirozo; Hirata, Minoru; Matsukuma, Hitoshi; Ishikawa, Kunio; and Tanaka, Junichi, to Nippon Steel Corporation. Cage-roll unit for metal pipe forming. 4,299,108, Cl. 72-178.000.
Kato, Yasuo: *See—*
Aoki, Mitsugu; Oana, Yoshinori; Kato, Yasuo; and Ishihara, Taketoshi, 4,299,455, Cl. 351-30.000.
Katoh, Takashi: *See—*
Seiki, Kazuo; Katoh, Takashi; and Yoshida, Yoshiaki, 4,299,084, Cl. 57-58.890.
Katsurada, Shigeho: *See—*
Takeyama, Tetsu; Azuma, Kenkoku; Ikeda, Akira; Yamamoto, Toshie; and Katsurada, Shigeho, 4,299,599, Cl. 55-180.000.
Katz, Leonhard; and Ormord, Lawrence A., to Astro Dynamics, Inc. Trans-synchronous motor apparatus and method. 4,300,077, Cl. 318-812.000.
Kaufman, Harold A.: *See—*
Downing, Charles R.; and Kaufman, Harold A., 4,299,618, Cl. 71-121.000.
Kawabata, Tatsuo: *See—*
Bairinji, Riyoichi; Kawabata, Tatsuo; and Tanaka, Tatsundo, 4,299,702, Cl. 210-433.200.
Kawabe, Takao; and Kawabe, Yoshiyuki. Device for starting AC load using AC generator as power source. 4,300,089, Cl. 322-8.000.
Kawabe, Yoshiyuki: *See—*
Kawabe, Takao; and Kawabe, Yoshiyuki, 4,300,089, Cl. 322-8.000.
Kawada, Shigeki; Fujioka, Yoshiki; Ohta, Naoto; and Takahasi, Yasuo, to Fujitsu Fanuc Limited. DC Motor control system. 4,300,079, Cl. 318-390.000.
Kawakami, Isao: *See—*
Aoki, Motohisa; Kawakami, Isao; and Nishihara, Masami, 4,299,719, Cl. 252-188.000.
Kawamura, Kazuo, to Tokyo Shibaura Denki Kabushiki Kaisha. Television camera device. 4,300,168, Cl. 358-210.000.
Kawamura, Masaharu; and Shigeta, Yoshihiro, to Canon Kabushiki Kaisha. Display device for camera. 4,299,463, Cl. 354-127.000.
Kawasaki, Mikio: *See—*
Ito, Noboru; Sakamoto, Eiichi; Kawasaki, Mikio; and Uchida, Takashi, 4,299,908, Cl. 430-244.000.
Kawasaki Steel Corporation: *See—*
Shinohara, Yoshiaki, 4,299,565, Cl. 432-194.000.
Kawata, Takashi: *See—*
Nakamura, Norio; Tominaga, Satoshi; and Kawata, Takashi, 4,299,560, Cl. 432-36.000.
Kawatsura, Yoshihiro; Shimizu, Katsuichi; and Sakamaki, Hisashi, to Canon Kabushiki Kaisha. Image forming process and apparatus therefor. 4,299,476, Cl. 355-14.00C.
Kay, Arthur H.: *See—*
Dziewulski, Ted; and Kay, Arthur H., 4,299,055, Cl. 47-66.000.
Kayama, Hiroyuki: *See—*
Mouri, Takenori; and Kayama, Hiroyuki, 4,299,849, Cl. 426-51.000.
Kaye, Gordon E., to Duracell International Inc. Fuse receptacle. 4,299,435, Cl. 339-150.00F.
Kaye, Peter D., to Bell Industries, Inc. Grinding machine with reorientable chain holding clamp. 4,299,142, Cl. 76-25.00A.
Kazeil, James E.; and Kazeil, Joseph. Combination wheelchair lift and steps for vehicle doorways. 4,299,528, Cl. 414-546.000.
Kazeil, Joseph: *See—*
Kazeil, James E.; and Kazeil, Joseph, 4,299,528, Cl. 414-546.000.
Kearney, Mark B.: *See—*
Dunphy, Daniel L. S.; and Kearney, Mark B., 4,300,063, Cl. 307-355.000.
Kearney & Trecker Corporation: *See—*
Cesarz, Michael R.; and Stobbe, Richard E., 4,300,086, Cl. 318-801.000.
Keggenhoff, Berthold; and Rosenkranz, Hans J., to Bayer Aktiengesellschaft. Non-aqueous dispersions of water-soluble polymers. 4,299,755, Cl. 260-23.0AR.
Kehr, Dietrich: *See—*
Dietrich, Manfred; Wuhl, Helmut; Fitzer, Erich; Brennfleck, Karl; and Kehr, Dietrich, 4,299,861, Cl. 427-62.000.
Keiji, Taniuchi. Extrusion cover for containers. 4,299,329, Cl. 220-276.000.
Keiper Automobiltechnik GmbH & Co. KG: *See—*
Reinmoeller, Adolf, 4,299,316, Cl. 192-48.800.
Keller, Russell D. Fuel tank vent. 4,299,247, Cl. 137-43.000.
Kelley, Stephen H.; and Lillis, William J., to Motorola, Inc. Hybrid circuit. 4,300,023, Cl. 179-170.0NC.
Kelley, Thomas F.; Mody, Dinesh I.; and Mountain, Charles F., to Instrumentation Laboratory Inc. Analytical system for analyzing CO_2 content of a fluid. 4,299,794, Cl. 422-68.000.
Kelly, Ronald. Crop divider for a harvester. 4,299,080, Cl. 56-314.000.
Kelly, Walter F., to Wiremold Company, The. Method of making two ply duct core. 4,299,641, Cl. 156-143.000.
Kemmochi, Sampei: *See—*
Ito, Yasuro; Higuchi, Yoshiro; Mochida, Yutaka; Kemmochi, Sampei; Kaga, Hideharu; and Yamamoto, Yasuhiro, 4,299,633, Cl. 106-97.000.
Kennecott Corporation: *See—*
Snow, Gary N., 4,299,810, Cl. 423-510.000.
Kennedy, Peter; and North, Bernard, to United Kingdom Atomic Energy Authority. Silicon carbide bodies and their production. 4,299,631, Cl. 501-91.000.
Kennedy, Tom E.: *See—*
Myers, James E.; Kennedy, Tom E.; and Perey, Arthur, 4,299,099, Cl. 62-256.000.
Kennedy, Warren C.: *See—*
Scarton, Henry A.; Kennedy, Warren C.; and McDonald, John F., 4,300,033, Cl. 219-70.000.
Kennelly, Brian M.: *See—*
Shvartsman, Vladimir A., 4,300,101, Cl. 330-149.000.
Kennison, Robert E.: *See—*
Clark, Roger J.; and Kennison, Robert E., 4,299,866, Cl. 427-255.600.
Kepros-Ganes Company: *See—*
Collias, George J., 4,299,161, Cl. 99-369.000.
Kernforschungsanlage Julich Gesellschaft mit beschrankter Haftung: *See—*
Ibach, Harald; Froitzheim, Hermann; Bruchmann, Heinz-Dieter; and Lehwald, Sieghard, 4,300,045, Cl. 250-305.000.
Luhleich, Hartmut; Pflaum, Peter; Dias, Francisco J.; Nauomidis, Aristides; Schirbach, Arno; and Nickel, Hubertus, 4,299,881, Cl. 428-308.000.
Kernforschungszentrum Karlsruhe Gesellschaft mit beschrankter Haftung: *See—*
Dietrich, Manfred; Wuhl, Helmut; Fitzer, Erich; Brennfleck, Karl; and Kehr, Dietrich, 4,299,861, Cl. 427-62.000.
Holl, Wolfgang; Sester, Karl-Ekkehard; Eberle, Siegfried H.; and Sontheimer, Heinrich, 4,299,922, Cl. 521-26.000.
Kerr-McGee Coal Corporation: *See—*
Gossard, Amzi, 4,299,295, Cl. 175-45.000.
Kerscher, Franz; and Schaffer, Guenther, to Siemens Aktiengesellschaft. Connectors for the construction of hollow tube mounting frameworks. 4,299,508, Cl. 403-172.000.
Kesling, Haven S., Jr.: *See—*
Hsu, Chao-Yang; and Kesling, Haven S., Jr., 4,299,976, Cl. 560-190.000.
Kessler, Georg: *See—*
Wagner, Gerhard; Nagel, Dieter; and Kessler, Georg, 4,299,002, Cl. 14-2.400.
Kessler, Milton; and Kessler, Ronald N. Coat hanger carrier. 4,299,342, Cl. 294-149.000.
Kessler, Ronald N.: *See—*
Kessler, Milton; and Kessler, Ronald N., 4,299,342, Cl. 294-149.000.
Ketley, Keith H., to Akerman & Jeavons (Birmingham) Ltd. Mixing valves. 4,299,354, Cl. 230-12.00A.
Ketterer, Stanley J., to Singer Company, The. Bobbin thread tension device. 4,299,181, Cl. 112-184.000.
Khokhlov, Alexandr A.: *See—*
Azbukin, Vladimir G.; Balandin, Jury F.; Gorynin, Igor V.; Gluskin, Lev Y.; Zvezdin, Jury I.; Ignatenko, Alexandr G.; Krasnov, Alexandr N.; Melekhov, Rostislav K.; Osipova, Inna S.; Pavlov, Valery N.; Khokhlov, Alexandr A.; Stepanov, Ivan A.; Anfimov, Alexandr F.; Ardentov, Vasily V.; Burmakin, Viktor M.; Ignatov, Viktor A.; Rokhlin, Eduard A.; and Zhitkov, Vladimir V., 4,299,623, Cl. 75-128.00R.
Khulbe, Chandra P.; Ranganathan, Ramaswami; and Pruden, Barry B. Hydrocracking of heavy oils/fly ash slurries. 4,299,685, Cl. 208-48.0AA.

Kikuchi, Yoshiyasu: *See—*
Tsuiki, Hideo; Kikuchi, Yoshiyasu; Kirii, Hiroshi; and Nakamura, Koji, 4,300,136, Cl. 340-747.000.
Kikuma, Toshio: *See—*
Matsumoto, Hiromi; Kikuma, Toshio; Nakajima, Koe; and Ohnuki, Akira, 4,299,109, Cl. 72-241.000.
Kim, Seung K., to General Electric Company. Dual mode automatic fine tuning. 4,300,165, Cl. 358-195.100.
Kimball International, Inc.: *See—*
Dietrich, Ralph N.; Howell, Stephen L.; and Robinson, John W., 4,299,154, Cl. 84-1.030.
Kimira, Hiroshi; Abiko, Kenji; Sato, Takashi; Yoshii, Isamu; Watanabe, Sadao; and Takei, Yutaka, to Sony Corporation. Magnetic alloy. 4,299,622, Cl. 75-124.000.
Kimura, Tomohiko: *See—*
Hashio, Moriki; and Kimura, Tomohiko, 4,299,266, Cl. 164-491.000.
Kindl, Bruno: *See—*
Casson, Harold V.; Crabtree, Grant G.; Kindl, Bruno; and Noonan, Edward B., 4,299,869, Cl. 428-35.000.
Kinley, John C.; Dieckman, Harry E.; and Anderson, Clifford E., to J. C. Kinley Company. Calipering tool. 4,299,033, Cl. 33-178.00F.
Kinoshita, Shinichi, to Tsudakoma Kogyo Kabushiki Kaisha. Selvage forming device. 4,299,257, Cl. 139-54.000.
Kioritz Corporation: *See—*
Aiyama, Fumihiko; and Hiramatsu, Kenzo, 4,299,605, Cl. 55-370.000.
Kiraly, Ildiko: *See—*
Mago nee Karacsony, Erzsebet; Toldy, Lajos; Borsy, Jozsef; Tardos, Laszlo; Kiraly, Ildiko; and Ronay, Andras, 4,299,836, Cl. 424-261.000.
Kirii, Hiroshi: *See—*
Tsuiki, Hideo; Kikuchi, Yoshiyasu; Kirii, Hiroshi; and Nakamura, Koji, 4,300,136, Cl. 340-747.000.
Kirsch, Francis W.; Barmby, David S.; and Potts, John D., to Sun Oil Company of Pennsylvania. Crystalline alumino-silicate zeolites containing polyvalent metal cations. 4,300,015, Cl. 585-722.000.
Kisfaludy, Lajos; Szirtes, Tamas; Balaspiri, Lajos; Palosi, Eva; Szporny, Laszlo; and Sarkadi, Adam, to Richter Gedeon Vegyeszeti Gyar Rt. Tripeptides acting on the central nervous system and a process for the preparation thereof. 4,299,821, Cl. 424-177.000.
Kitani, Teruo: *See—*
Sagishima, Takayuki; and Kitani, Teruo, 4,300,155, Cl. 358-24.000.
Kitano, Yoshiyuki: *See—*
Arima, Kazutaka; and Kitano, Yoshiyuki, 4,299,173, Cl. 104-284.000.
Kiuchi, Masashi: *See—*
Mitsuhashi, Yasuo; Kiuchi, Masashi; Takasu, Yoshio; Fukumoto, Hiroshi; Hino, Takashi; and Uchiyama, Masaki, 4,299,900, Cl. 430-122.000.
Klein, Helmut; and John, Kamar P., to Metallgesellschaft Aktiengesellschaft. Process for recovering pure benzene. 4,299,667, Cl. 203-42.000.
Kleyn, John G., to Schoorlemmer, Ben, a part interest. Biological preservation of beer. 4,299,853, Cl. 426-271.000.
Klimes, Norbert: *See—*
Lassmann, Gunter; Ebert, Bernd; and Klimes, Norbert, 4,299,337, Cl. 222-135.000.
Klockner-Humboldt-Deutz AG: *See—*
Herchenbach, Horst; Ramesohl, Hubert; and Brachthauser, Kunibert, 4,299,564, Cl. 432-106.000.
Klose, Thomas R.; and Webster, Frank G., to Eastman Kodak Company. Electrically photosensitive materials and elements for photoelectrophoretic imaging processes. 4,299,894, Cl. 430-9.000.
Kloss, Wolfgang: *See—*
Sauer, Hans; and Kloss, Wolfgang, 4,299,646, Cl. 156-278.000.
Klotz, Marvin R., to Standard Oil Company (Indiana). Crystalline chromosilicates and process of preparation. 4,299,808, Cl. 423-331.000.
Knapp, Heinrich; Sauer, Rudolf; Romann, Peter; Hafner, Udo; Wilfert, Thomas; and Kammerer, Werner, to Robert Bosch GmbH. Device for measuring the mass of a flowing medium. 4,299,124, Cl. 73-204.000.
Knappe, Ortwin: *See—*
Hame, Walter; and Knappe, Ortwin, 4,299,659, Cl. 376-272.000.
Knifton, John F.; and Moss, Philip H., to Texaco Inc. Selective oxoamination process. 4,299,985, Cl. 564-467.000.
Knigge, Vincent L.; and Shim, Norm, to Baxter Travenol Laboratories, Inc. Pre-programmable metering apparatus for a fluid infusion system. 4,299,218, Cl. 128-214.00F.
Knodt, Ruediger W.; Charland, Terrence D.; Hull, Charles J.; Hutton, James E.; Webb, John L.; and Yonovich, John R., to Xerox Corporation. Bound document apparatus for a copier. 4,299,478, Cl. 355-3.00R.
Knogo Corporation: *See—*
Minasy, Arthur J., 4,299,040, Cl. 40-20.00R.
Knothe, Erich; Blawert, Dieter; and Melcher, Franz-Josef, to Sartorius GmbH. Weighing machine. 4,299,299, Cl. 177-264.000.
Kobashi, Kiyoshi, to Toyota Jidosha Kogyo Kabushiki Kaisha. Trapper device for collecting and incinerating fine particulates included in exhaust gas from a diesel engine. 4,299,600, Cl. 55-213.000.
Kobayashi, Syouzou: *See—*
Sawakata, Akira; Yamamuro, Hiroshi; and Kobayashi, Syouzou, 4,299,495, Cl. 356-442.000.
Kobayashi, Takashi: *See—*
Tanaka, Minoru; Itoh, Fumikazu; Saitoh, Hiroshi; Kobayashi, Takashi; Sasaki, Akiyoshi; and Akutsu, Norio, 4,299,023, Cl. 29-564.100.
Kobe, Inc.: *See—*
Erickson, John W., 4,299,352, Cl. 233-3.000.
Kobishi Electric Co., Ltd.: *See—*
Ishii, Tadashi, 4,300,128, Cl. 340-392.000.
Koch, Friedrich-Karl, to Peltzer & Ehlers. Method for the production of threaded nuts by cold forming. 4,299,000, Cl. 10-86.00F.
Koch, Keith E.: *See—*
Becker, Danny J.; Satzler, Ronald L.; and Koch, Keith E., 4,299,396, Cl. 277-12.000.
Koch, Richard L.; and VanDeberg, Walter H., to F. Jos. Lamb Company. Helical storage and conveying unit. 4,299,323, Cl. 198-774.000.
Kodama, Mikio: *See—*
Sakano, Hajime; Kodama, Mikio; Ito, Akitoshi; and Terada, Miyuki, 4,299,929, Cl. 525-67.000.
Koehler, Michael; and Petry, Wolfgang, to Bleistahl G.m.b.H. Metal powder composition and article made therefrom. 4,299,628, Cl. 75-230.000.
Koel, Gerrit J.; Gorter, Frederik W.; and Gerkema, Jan T., to U.S. Philips Corporation. Thin-film magnetic head for reading and writing information. 4,300,177, Cl. 360-113.000.
Kogl, Fred: *See—*
Gott, Hans; Furndorfler, Peter; Kogl, Fred; Ritter, Klaus; and Ritter, Gerhard, 4,299,523, Cl. 414-55.000.
Koglin, Bernd: *See—*
Dahm, Manfred; Jabs, Gert; Koglin, Bernd; Schnoring, Hildegard; and Riecke, Kurt, 4,299,723, Cl. 252-316.000.
Kokusai Denshin Denwa Co., Ltd.: *See—*
Wakabayashi, Hiroharu; and Niiro, Yasuhiko, 4,300,239, Cl. 455-601.000.
Komai, Hiromichi: *See—*
Isayama, Takuro; Yamazaki, Hiroshi; Komai, Hiromichi; and Sato, Tsutomu, 4,300,144, Cl. 346-140.00R.
Komai, Hisataka: *See—*
Iwata, Riso; Ishikawa, Atsuo; and Komai, Hisataka, 4,299,950, Cl. 528-306.000.
Komodromos, Nicos M., to Du Pont de Nemours, E. I., and Company. Instrument for determining the distinctness of image of a paint film. 4,299,497, Cl. 356-448.000.
Komori, Ritsuo: *See—*
Sengoku, Masayuki; Honkawa, Tadashi; Kuroishi, Tadafumi; and Komori, Ritsuo, 4,299,487, Cl. 356-320.000.
Kondo, Kazuyoshi; and Nakamura, Yoshiaki, to Kabushiki Kaisha Wako. Method and device for producing synchronizer ring. 4,299,112, Cl. 72-354.000.
Kondoh, Shiroh: *See—*
Fujitani, Yoshiyasu; Muraki, Hideaki; Kondoh, Shiroh; Tomita, Makoto; Yokota, Kouji; and Sobukawa, Hideo, 4,299,734, Cl. 252-462.000.
Koneval, Donald J., to Gould Inc. Thin film strain gage apparatus with unstrained temperature compensation resistances. 4,299,130, Cl. 73-766.000.
Konig, Eberhard: *See—*
Berndt, Gerhard; Konig, Eberhard; Pedain, Josef; Thoma, Wilhelm; and Schroer, Walter, 4,299,868, Cl. 427-389.900.
Konishi, Hideo; Matsuoka, Kazunori; and Gouya, Takao, to Sharp Kabushiki Kaisha. Control assembly for electronic tuning receivers. 4,300,238, Cl. 455-161.000.
Konishi, Kazuo; and Sato, Yasuo, to Takeda Chemical Industries, Ltd. O-Ethyl S-n-propyl O-[4-methylthio(sulfinyl)(sulfonyl)-2(3)-methoxyphenyl] phosphorothiolates as pesticides. 4,299,827, Cl. 424-216.000.
Konishiroku Photo Industry Co., Ltd.: *See—*
Endo, Koichi, 4,299,473, Cl. 355-3.0SH.
Fujimatsu, Wataru; Usagawa, Yasushi; Sasaki, Osamu; and Matsuura, Katsumi, 4,299,914, Cl. 430-384.000.
Ito, Noboru; Sakamoto, Eiichi; Kawasaki, Mikio; and Uchida, Takashi, 4,299,908, Cl. 430-244.000.
Koontz, Carl E.: *See—*
Ochs, Charles S.; and Koontz, Carl E., 4,299,328, Cl. 215-252.000.
Koppers Company, Inc.: *See—*
Demers, Harlan J., 4,299,511, Cl. 403-282.000.
Korach, Malcolm, to PPG Industries, Inc. Process for electrolyzing an alkali metal halide using a solid polymer electrolyte cell. 4,299,674, Cl. 204-98.000.
Korach, Malcolm, to PPG Industries, Inc. Process for electrolyzing an alkali metal halide. 4,299,675, Cl. 204-98.000.
Korn, Lawrence D.; Goodman, Erik D.; and MacCluer, Charles R. Seismic alarm system. 4,300,135, Cl. 340-690.000.
Korosue, Akira, to Nankai Tekko Co., Ltd. Stepless transmission device for a bicycle. 4,299,581, Cl. 474-69.000.
Kos, Steven, to Northern Telecom Limited. Thermal printer. 4,300,142, Cl. 346-76.0PH.
Koshibe, Shigeru: *See—*
Nanjo, Motoyuki; Watanabe, Tsutomu; Koshibe, Shigeru; and Azuma, Keiji, 4,299,947, Cl. 528-139.000.
Kousaka, Fusao: *See—*
Ueda, Toshitsugu; and Kousaka, Fusao, 4,299,122, Cl. 73-862.590.
Kovacs, Eddie J.: *See—*
Eivers, Donald J.; and Kovacs, Eddie J., 4,300,207, Cl. 364-900.000.
Kovacs, Gabor; Szekely, Istvan; Lovasz nee Gaspar, Marianne; Soos, Rudolf; and Dukai, Joszef, to Chinoin Gyogyszer es Vegyeszeti Termekek Gyara Rt. Preparation of cyclopropanecarboxylic acid esters. 4,299,972, Cl. 560-124.000.

Kovaleva, Irina D.; Tyschenko, Ljudmila A.; and Potekhin, Valery F. Endoprosthesis of the body of the innominate bone. 4,298,993, Cl. 3-1.912.
Koyama, Shozi: *See*—
Okabe, Michimasa; and Koyama, Shozi, 4,299,607, Cl. 62-13.000.
Koyanagi, Katubumi: *See*—
Nakauchi, Hiroshi; Koyanagi, Katubumi; Kato, Hiroaki; Takafuji, Yutaka; Inami, Yasuhiko; and Uede, Hisashi, 4,300,138, Cl. 340-785.000.
Koza, John R.: *See*—
Oberdeck, Martin K.; and Koza, John R., 4,299,637, Cl. 156-64.000.
Kozima, Akio: *See*—
Hashimoto, Mitsuru; Sakai, Kiyoshi; Ohta, Masafumi; Kozima, Akio; Sasaki, Masaomi; and Tsutsui, Kyoji, 4,299,896, Cl. 430-58.000.
Kraft, Derald H.; and Rinaldo, Daniel M., to Dyneer Corporation. Hydraulic belt tensioner construction. 4,299,583, Cl. 474-110.000.
Kraftwerk Union Aktiengesellschaft: *See*—
Weber, Robert; and Gallwas, Johannes, 4,299,656, Cl. 376-249.000.
Kragh, Loren G.: *See*—
Sanderson, William G.; Sumner, Richard B.; and Kragh, Loren G., 4,299,786, Cl. 261-128.000.
Kralik, Andrew J.: *See*—
Dimarco, Bernard; and Kralik, Andrew J., 4,300,030, Cl. 200-42.00T.
Krasnov, Alexandr N.: *See*—
Azbukin, Vladimir G.; Balandin, Jury F.; Gorynin, Igor V.; Gluskin, Lev Y.; Zvezdin, Jury I.; Ignatenko, Alexandr G.; Krasnov, Alexandr N.; Melekhov, Rostislav K.; Osipova, Inna S.; Pavlov, Valery N.; Khokhlov, Alexandr A.; Stepanov, Ivan A.; Anfimov, Alexandr F.; Ardentov, Vasily V.; Burmakin, Viktor M.; Ignatov, Viktor A.; Rokhlin, Eduard A.; and Zhitkov, Vladimir V., 4,299,623, Cl. 75-128.00R.
Krenitsky, Thomas A.: *See*—
Rideout, Janet L.; Krenitsky, Thomas A.; and Elion, Gertrude B., 4,299,823, Cl. 424-180.000.
Rideout, Janet L.; Krenitsky, Thomas A.; and Elion, Gertrude B., 4,299,824, Cl. 424-180.000.
Kromolicki, Zigmunt K.: *See*—
Sahajpal, Ved K.; Delaere, Jacques; Kromolicki, Zigmunt K.; and Settels, Mattheus R., 4,299,885, Cl. 428-403.000.
Kron, Gerald J., to Singer Company, The. Helmet coupled acceleration simulator. 4,299,576, Cl. 434-59.000.
Kruger, Gerhard; and Griep, Winfried, to Vaw Leichtmetall GmbH. Foot pedal for motor vehicles. 4,299,139, Cl. 74-560.000.
Kruger, Lawrence M.: *See*—
Jasmin, James L.; and Kruger, Lawrence M., 4,300,208, Cl. 364-900.000.
Kruka, Vitold R.; Berni, Albert J.; Park, Lawrence D., Jr.; and Cadena, Edward R., to Shell Oil Company. Free flooding hydrophone mounting. 4,300,218, Cl. 367-165.000.
Kubota, Tetsumaru, to Olympus Optical Co., Ltd. Stabbing apparatus for diagnosis of living body. 4,299,230, Cl. 128-630.000.
Kuck, Mark A.; and Miller, Gary K., to Stauffer Chemical Company. Decolorization of elemental yellow phosphorus. 4,299,806, Cl. 423-322.000.
Kudchadker, Mohan V.: *See*—
Brown, Alfred; Kudchadker, Mohan V.; Varnon, James E.; and Whittington, Lawrence E., 4,299,284, Cl. 166-245.000.
Kudryavtsev, Evgeny A.: *See*—
Polyakov, Anisim A.; Yarnykh, Vladimir S.; Smirnov, Anatoly M.; Simetsky, Mark A.; Kudryavtsev, Evgeny A.; Talanov, German A.; Zakomyrdin, Alexandr A.; Rudenko, Boris N.; Rakhmanin, Pavel P.; and Guschin, Vyacheslav N., 4,299,816, Cl. 424-45.000.
Kuehl, Guenter H., to Mobil Oil Corporation. Shape selective catalyst from zeolite alpha and use thereof. 4,299,686, Cl. 208-111.000.
Kuhlmann, George E.; and Bemis, Alan G., to Standard Oil Company (Indiana). Preparation of phthalic acid by solventless oxidation of liquid ortho-xylene. 4,299,977, Cl. 562-416.000.
Kuhn S.A.: *See*—
Oberle, Edmond, 4,299,291, Cl. 172-49.500.
Werner, Anton, 4,299,078, Cl. 56-14.500.
Kuhr, Manfred: *See*—
Berger, Dieter; Frey, Gunter; Kuhr, Manfred; and Werner, Wolfgang, 4,299,917, Cl. 435-19.000.
Kulesza, Ralph J.; Hicks, Alan A.; Licitis, Gunars, Jr.; and Morrison, Howard J., to Marvin Glass & Associates. Electronic fencing game. 4,299,386, Cl. 273-85.00F.
Kullendorff, Anders; and Vahtra, Tonu, to Stal-Laval Turbin AB. Gas turbine plant with fluidized bed combustor. 4,299,087, Cl. 60-39.14M.
Kumano, Shinzi, to Nippon Gakki Seizo Kabushiki Kaisha. Supporting construction for keyboard assembly. 4,299,155, Cl. 84-177.000.
Kume, Toshiaki; Kakinuma, Toshihide; Makabe, Hachiro; Watanabe, Kazuo; and Takenoya, Hideaki, to Janome Sewing Machine Co., Ltd. Electrical automatic pattern stitching sewing machine. 4,299,180, Cl. 112-158.00E.
Kummer, Emanuel: *See*—
Oetiker, Hans; Kummer, Emanuel; Rusterholz, Kurt; and Gamperle, Hermann, 4,299,597, Cl. 55-96.000.
Kummerl, Klaus, to GTC Gibson Technical Company Limited. Method of making transport drum. 4,299,022, Cl. 29-450.000.
Kumura, Masao: *See*—
Hayakawa, Masao; Maeda, Takamichi; and Kumura, Masao, 4,300,153, Cl. 357-80.000.
Kuperman, Gilbert G.: *See*—
Task, Harry L.; and Kuperman, Gilbert G., 4,299,451, Cl. 350-407.000.
Kuraray Co., Ltd.: *See*—
Omura, Yoshiaki; Mori, Fumio; Fujita, Yoshiji; Nishida, Takashi; Hosogai, Takeo; Aihara, Sukeji; Tamai, Yoshin; Wada, Fumio; and Itoi, Kazuo, 4,299,839, Cl. 424-274.000.
Kuratani, Osamu: *See*—
Matsumoto, Tadashi; Kuratani, Osamu; Hirose, Yasunori; and Toba, Susumu, 4,299,997, Cl. 568-678.000.
Kureha Chemical Industry Co. Ltd.: *See*—
Suzuki, Hiroshi; Narasaki, Hideo; Seki, Sigeru; Endo, Kiichi; and Hirose, Takao, 4,299,738, Cl. 252-541.000.
Kureha Kagaku Kogyo Kabushiki Kaisha: *See*—
Fujii, Masaharu; and Nakamura, Kenichi, 4,300,047, Cl. 250-330.000.
Kuribayashi, Isao; Ohzeki, Jurou; and Shimamura, Kiyoshi, to Asahi-Dow Limited. Aromatic polyether resin composition. 4,299,757, Cl. 260-42.180.
Kurihara, Mamoru: *See*—
Muramatsu, Tateo; and Kurihara, Mamoru, 4,299,514, Cl. 405-115.000.
Kuroda, Masataka: *See*—
Miyata, Shigeo; and Kuroda, Masataka, 4,299,759, Cl. 260-45.70R.
Kuroishi, Tadafumi: *See*—
Sengoku, Masayuki; Honkawa, Tadashi; Kuroishi, Tadafumi; and Komori, Ritsuo, 4,299,487, Cl. 356-320.000.
Kurosu, Tomio; and Okajima, Kouichi, to Copal Company Limited. Drive controlling circuit for electric shutters. 4,299,469, Cl. 354-268.000.
Kurt Manufacturing Company, Inc.: *See*—
Lenz, John O., 4,299,377, Cl. 269-136.000.
Kurzius, Karl A. Can holder. 4,299,366, Cl. 248-145.600.
Kuse, Kazuki: *See*—
Yoshieda, Keiichi; and Kuse, Kazuki, 4,299,027, Cl. 29-766.000.
Kusters, Eduard: *See*—
Hartmann, Werner; and Kusters, Karl-Heinz, 4,299,162, Cl. 100-43.000.
Kusters, Karl-Heinz: *See*—
Hartmann, Werner; and Kusters, Karl-Heinz, 4,299,162, Cl. 100-43.000.
Kutter, Eberhard: *See*—
Austel, Volkhard; Kutter, Eberhard; Heider, Joachim; and Diederen, Willi, 4,299,834, Cl. 424-253.000.
Kuzuya, Susumu: *See*—
Watanabe, Tomoyoshi; Nakai, Toshio; Kuzuya, Susumu; Onoda, Hiroshi; Asai, Akira; Iwase, Takayuki; and Nakamura, Kazuo, 4,299,503, Cl. 400-161.500.
Kwiatek, Jack: *See*—
Hinnenkamp, James A.; and Kwiatek, Jack, 4,299,758, Cl. 260-45.70R.
Kwong, Peter C.: *See*—
Bacehowski, David V.; Kwong, Peter C.; Bowerman, Harold H., Jr.; and Czuba, Leonard F., 4,299,256, Cl. 138-137.000.
Kyowa Chemical Industry Co. Ltd.: *See*—
Miyata, Shigeo; and Kuroda, Masataka, 4,299,759, Cl. 260-45.70R.
L. ID. IT Lattoneria Idrotermica Italiano dei Fratelli Belotti: *See*—
Belotti, Giovanni, 4,299,113, Cl. 72-389.000.
L. Payen & Cie: *See*—
Payen, Pierre, 4,299,884, Cl. 428-377.000.
La Cooperation Pharmaceutique Francaise: *See*—
Durlach, Jean P., 4,299,838, Cl. 424-274.000.
LABAZ: *See*—
Pigerol, Charles; Schaefer, Michel; and Nanthavong, Souli, 4,299,768, Cl. 260-326.250.
Labeco Harvesters, Inc.: *See*—
Harris, Robert H.; Humphrey, Troy G.; and Stimson, John J., Jr., 4,299,081, Cl. 56-330.000.
Laftsidis, Stergios: *See*—
Glabe, Elmer F.; Anderson, Perry W.; and Laftsidis, Stergios, 4,299,854, Cl. 426-331.000.
Lam, Kit M.: *See*—
Neuhoff, Donald; Mones, Arthur H.; and Lam, Kit M., 4,299,876, Cl. 428-208.000.
Lambert, Phillip E. Machine for raking or sweeping. 4,299,079, Cl. 56-16.700.
Lamberti, Vincent: *See*—
Gutierrez, Eddie N.; and Lamberti, Vincent, 4,299,773, Cl. 260-343.600.
Lambl, George R. Disco beat meter. 4,300,225, Cl. 369-2.000.
Lamote, Jean-Pierre: *See*—
Reboux, Jean; and Lamote, Jean-Pierre, 4,300,031, Cl. 219-10.410.
Lancaster, Lorine E. Powered hand tool for use in household cleaning operations. 4,299,004, Cl. 15-97.00R.
Lane, Bruce V.: *See*—
Swiatosz, Edmund; and Lane, Bruce V., 4,299,579, Cl. 434-226.000.
Lane, Joseph A.: *See*—
Becker, Bernard B.; Bowman, John K.; and Lane, Joseph A., 4,299,248, Cl. 137-202.000.
Langham, Ronald F.: *See*—
Long, Olen R.; and Langham, Ronald F., 4,299,281, Cl. 166-135.000.
Lanzl, Joseph E. Bell holder and dispenser. 4,299,345, Cl. 224-252.000.
Larson, Howard L., to Arrow Huss Inc. Demountable flume amusement ride. 4,299,171, Cl. 104-70.000.

Laslo, Joseph A.: *See*—
Lynn, James B.; Laslo, Joseph A.; and Homberg, Otto A., 4,299,801, Cl. 423-228.000.
Lassmann, Gunter; Ebert, Bernd; and Klimes, Norbert, to Akademie der Wissenschaften der DDR. Pulsed syringe for use with electron-spin-resonance spectrometers and the like. 4,299,337, Cl. 222-135.000.
Lathrop, Dan H.; and Haynes, Hendrick W. Signage system. 4,299,043, Cl. 40-624.000.
Lauer, Richard E.; and Smith, Dallas F., to General Electric Company. Methods and apparatus for placing windings in stator core slots and coil injection machine tool packs. 4,299,025, Cl. 29-596.000.
Lavanchy, Gerard A.; Mezger, Fritz; and Rossier, Marc-Henri, to Maschinenfabrik & Eisengiesserei Ed. Mezger AG. Automatically controlled casting plant. 4,299,268, Cl. 164-155.000.
Layton, Allen C., to Martin Marietta Corporation. Beamrider guidance technique using digital FM coding. 4,299,360, Cl. 244-3.130.
LeBegue, Maurice K.; and Herron, Charles R., to National Mine Service Company. Cutting tool assembly. 4,299,424, Cl. 299-93.000.
Ledford, Thomas H.; and Lerner, Howard, to Exxon Research & Engineering Co. Degassing molten sulfur. 4,299,811, Cl. 423-578.00R.
Ledis, Stephen L.: *See*—
Crews, Harold R.; Chastain, David L., Jr.; and Ledis, Stephen L., 4,299,726, Cl. 252-408.000.
Lednikov, Anatoly I.: *See*—
Nikolaev, Igor V.; Lednikov, Anatoly I.; Goldshtein, Boris G.; and Gornik, Leonid A., 4,299,293, Cl. 173-104.000.
Lee, Ho-Lun, to Celanese Corporation. Concentrated xanthan gum solutions. 4,299,825, Cl. 424-180.000.
Lee, Patrick S., to Sperry Corporation. Power driver control circuit for servo actuator. 4,300,080, Cl. 318-563.000.
Lee, Young-Jin, to Union Carbide Corporation. Process for preparing salts of carbamoyl sulfonic acid derivatives. 4,299,780, Cl. 260-513.00N.
Le Fur, Gerard R.: *See*—
Champseix, Alain A.; Gueremy, Claude G. A.; and Le Fur, Gerard R., 4,299,835, Cl. 424-258.000.
Legg, John C.: *See*—
Belder, Elmbert G.; Legg, John C.; and van der Linde, Robert, 4,299,742, Cl. 260-22.0EP.
Legg, Kenneth D.: *See*—
Cormier, Alan D.; Feil, Marvin; and Legg, Kenneth D., 4,299,728, Cl. 252-408.000.
Lehwald, Sieghard: *See*—
Ibach, Harald; Froitzheim, Hermann; Bruchmann, Heinz-Dieter; and Lehwald, Sieghard, 4,300,045, Cl. 250-305.000.
Leibinger, George E.; and Rowe, Albert, to General Electric Company. Circuit arrangement for controlling transformer current. 4,300,112, Cl. 336-180.000.
Leifels, Klaus-Dieter: *See*—
Tlach, Hugo; Leifels, Klaus-Dieter; and Mischler, Werner, 4,299,654, Cl. 162-164.0EP.
Leitgeb, Paul: *See*—
Benkmann, Christian; Leitgeb, Paul; and Asztalos, Stefan, 4,299,595, Cl. 55-21.000.
Leitner, Horst. Chain drive for motorcycle rear wheels carried by swing arms. 4,299,582, Cl. 474-109.000.
Le Martret, Odile: *See*—
Clemence, Francois; Deraedt, Roger; Allais, Andre; and Le Martret, Odile, 4,299,831, Cl. 424-251.000.
Lemelson, Jerome H. Patient monitoring device and method. 4,299,233, Cl. 128-687.000.
Lennon, John M.: *See*—
Martin, Trevor I.; and Lennon, John M., 4,299,983, Cl. 564-394.000.
Lenz, John O., to Kurt Manufacturing Company, Inc. Manually operated clamp effort intensifier for vise. 4,299,377, Cl. 269-136.000.
Leonard, Jackson D. Preparation of formic acid by hydrolysis of methyl formate. 4,299,981, Cl. 562-609.000.
Lepant, Marcel: *See*—
Teyssier, Gerard; and Lepant, Marcel, 4,299,809, Cl. 423-497.000.
Lepselter, Martin P., to Bell Telephone Laboratories, Incorporated. Complementary field-effect transistor integrated circuit device. 4,300,152, Cl. 357-42.000.
Lerner, Howard: *See*—
Ledford, Thomas H.; and Lerner, Howard, 4,299,811, Cl. 423-578.00R.
Leung, Charles: *See*—
Pettijohn, Richard R.; Leung, Charles; Manning, Ronald O.; Reyes, Zoila; and Thackray, Malcolm, 4,299,904, Cl. 430-139.000.
Lever Brothers Company: *See*—
Cottrell, John S.; and Powers, Peter J., 4,299,716, Cl. 252-99.000.
Cottrell, John S.; and Powers, Peter J., 4,299,717, Cl. 252-99.000.
Esposito, Michael A.; and Princen, Henricus M., 4,299,739, Cl. 252-545.000.
Gutierrez, Eddie N.; and Lamberti, Vincent, 4,299,773, Cl. 260-343.600.
Lewis Security Systems Limited: *See*—
Gilmour, William D., deceased, 4,300,236, Cl. 375-23.000.
Lewis, William: *See*—
Carignan, Donald J.; and Lewis, William, 4,299,166, Cl. 102-501.000.
Li, Tan P., to Monsanto Co. Preparation of vinyl chloride. 4,300,005, Cl. 570-224.000.
Licentia Patent-Verwaltungs-G.m.b.H.: *See*—
Minner, Willy, 4,300,058, Cl. 307-261.000.
Licitis, Gunars, Jr.: *See*—
Kulesza, Ralph J.; Hicks, Alan A.; Licitis, Gunars, Jr.; and Morrison, Howard J., 4,299,386, Cl. 273-85.00F.
Lillis, William J.: *See*—
Kelley, Stephen H.; and Lillis, William J., 4,300,023, Cl. 179-170.0NC.
Lilly Company, The: *See*—
Steele, Wallace A., 4,299,875, Cl. 428-151.000.
Lim, James K.: *See*—
Coppa, Richard J.; Lim, James K.; Ostrowski, John C.; and Rodriguez, Marie T., 4,299,461, Cl. 354-27.000.
Lincoff, Harvey A. Ophthalmological appliance. 4,299,227, Cl. 128-344.000.
Lincoln, Walter B. Paper clips. 4,299,013, Cl. 24-67.900.
Linde Aktiengesellschaft: *See*—
Benkmann, Christian; Leitgeb, Paul; and Asztalos, Stefan, 4,299,595, Cl. 55-21.000.
Benkmann, Christian, 4,299,596, Cl. 55-26.000.
Dworschak, Josef, 4,299,193, Cl. 122-7.00R.
Liotta, Ronald, to Exxon Research & Engineering Co. Demineralization of coal. 4,299,684, Cl. 208-8.0LE.
Litman, David J.; and Ullman, Edwin F., to Syva Company. Preferential signal production on a surface in immunoassays. 4,299,916, Cl. 435-6.000.
Litoyits, Theodore Aaron: *See*—
Macedo, Pedro B.; Samanta, Mrinmay; and Simmons, Joseph H., 4,299,608, Cl. 65-3.100.
Little, Roger O., to Spire Corporation. Traveling cathode X-ray source. 4,300,051, Cl. 250-445.00T.
Liu, Shuchen, to American Hoechst Corporation. Light-sensitive color proofing film with surfactant in a light-sensitive coating. 4,299,906, Cl. 430-157.000.
Liu, Thomas M. H.; Shinkai, Ichiro; and Sletzinger, Meyer, to Merck & Co., Inc. Process for preparing N-protected 2-aminoethanethiol. 4,299,974, Cl. 560-148.000.
Lloyd, Thomas C. Rotary percussion bit. 4,299,297, Cl. 175-410.000.
Locatelli, Jean-Louis: *See*—
Balme, Maurice; and Locatelli, Jean-Louis, 4,299,946, Cl. 528-128.000.
Loebenberg, David; and Gold, Elijah H., to Schering Corporation. Dermatological compositions and methods of use therefor. 4,299,845, Cl. 424-324.000.
Loehle, Mary J., to Badger Safe Protectors. Safe protector system. 4,299,176, Cl. 109-34.000.
Long, Olen R.; and Langham, Ronald F., to Otis Engineering Corporation. Compensating bridge plug. 4,299,281, Cl. 166-135.000.
Longin, Robert: *See*—
Aubert, Jean P.; Gasser, Francis; and Longin, Robert, 4,299,858, Cl. 426-656.000.
Loniello, Peter J., to General Signal Corporation. Insulating module including a heater element support. 4,299,364, Cl. 248-58.000.
Loper, Bernd: *See*—
Renz, Dieter; Schobbe, Hermann; and Loper, Bernd, 4,299,425, Cl. 301-9.0CN.
Lopresti, Philip V., to Western Electric Co., Inc. Method of adjusting circuit components. 4,300,196, Cl. 364-489.000.
Lord Corporation: *See*—
Olowinski, Edward J.; and John, Richard A., 4,299,085, Cl. 57-130.000.
Lord, John J., to Interlake, Inc. Load proximity detection techniques. 4,299,496, Cl. 356-446.000.
Loshing, Clement T.; and Thompson, Ralph J. System for monitoring, transmitting and conditioning of information gathered at selected locations. 4,300,125, Cl. 340-310.00A.
Lovasz nee Gaspar, Marianne: *See*—
Kovacs, Gabor; Szekely, Istvan; Lovasz nee Gaspar, Marianne; Soos, Rudolf; and Dukai, Joszef, 4,299,972, Cl. 560-124.000.
Lowe, Henry E. Flavoring dispenser. 4,299,851, Cl. 426-132.000.
Lu, Chin H.: *See*—
AuClair, Christopher J.; and Lu, Chin H., 4,299,903, Cl. 430-137.000.
Lubrizol Corporation, The: *See*—
Hoke, Donald L, 4,299,712, Cl. 252-52.00A.
Lucas Industries Limited: *See*—
Potter, James C.; and Sosnowski, Stanislaw J. A., 4,299,542, Cl. 417-214.000.
Luedders, Wilmer L., to Procter & Gamble Company, The. Anti-acne composition. 4,299,826, Cl. 424-181.000.
Luhleich, Hartmut; Pflaum, Peter; Dias, Francisco J.; Nauomidis, Aristides; Schirbach, Arno; and Nickel, Hubertus, to Kernforschungsanlage Julich Gesellschaft mit beschrankter Haftung. Graphitic molded article with corrosion-resistant surface layer stable under stress. 4,299,881, Cl. 428-308.000.
Lulay, Lawrence O.: *See*—
Nichols, Steven F.; and Lulay, Lawrence O., 4,299,165, Cl. 101-150.000.
Lummen, Chester F. Controller for a vehicular air conditioner. 4,299,094, Cl. 62-133.000.
Lynn, James B.; Laslo, Joseph A.; and Homberg, Otto A., to Bethlehem Steel Corporation. Regenerating alkanolamine desulfurizer solutions. 4,299,801, Cl. 423-228.000.
MacCluer, Charles R.: *See*—
Korn, Lawrence D.; Goodman, Erik D.; and MacCluer, Charles R., 4,300,135, Cl. 340-690.000.
Macedo, Pedro B.; Samanta, Mrinmay; and Simmons, Joseph H., to de Macedo, Pedro Buarque; and Litoyits, Theodore Aaron. Joint doping

of porous glasses to produce materials with high modifier concentrations. 4,299,608, Cl. 65-3.100.
Mackey, Maureen E. Women's protective key ring. 4,298,999, Cl. 7-170.000.
Madgavkar, Ajay M.; Vogel, Roger F.; and Swift, Harold E., to Gulf Research & Development Company. Utilization of energy obtained by substoichiometric combustion of low heating value gases. 4,299,086, Cl. 60-39.060.
Maeda, Akio; Usui, Tatuo; and Yasuda, Atsushi, to Nippon Zeon Co. Ltd. Process for producing epihalohydrin copolymer rubber. 4,299,944, Cl. 528-89.000.
Maeda, Hidetoshi; and Sasaki, Takehiko, to Sharp Kabushiki Kaisha. Time and date information correction in a combination timepiece and calculator utilizing a decimal point indicator display. 4,300,204, Cl. 364-705.000.
Maeda, Takamichi: *See*—
  Hayakawa, Masao; Maeda, Takamichi; and Kumura, Masao, 4,300,153, Cl. 357-80.000.
Magee, Philip S., to Chevron Research Company. 1-Alkylsulfonyl-3-substituted phosphinylthio- or phosphinothioylthio-propenes. 4,299,783, Cl. 260-948.000.
Magerli, Walter: *See*—
  Buluschek, Bruno; Magerli, Walter; and Muller, Erich, 4,299,362, Cl. 248-49.000.
Magirus-Deutz Aktiengesellschaft: *See*—
  Wagner, Gerhard; Nagel, Dieter; and Kessler, Georg, 4,299,002, Cl. 14-2.400.
Magnavox Company, The: *See*—
  Boyd, Kenneth L., 4,300,156, Cl. 358-64.000.
Mago nee Karacsony, Erzsebet; Toldy, Lajos; Borsy, Jozsef; Tardos, Laszlo; Kiraly, Ildiko; and Ronay, Andras, to Richter Gedeon Vegyeszeti Gyar Rt. Novel ergol-8-ene and ergolin compounds and process for preparing same. 4,299,836, Cl. 424-261.000.
Magome, Tamotu: *See*—
  Soma, Ikuo; Magome, Tamotu; and Matsumoto, Toru, 4,299,902, Cl. 430-125.000.
Maire, Bernard, to Ebauches Electroniques SA. System for making-up steps lost by the motor of a time-piece. 4,300,223, Cl. 368-85.000.
Maitre, Henri: *See*—
  Thery, Jean-Francois; Maitre, Henri; and Fleuret, Jacques P., 4,299,489, Cl. 356-336.000.
Major Prodotti Dentari S.p.A.: *See*—
  Ricci, Mario, 4,299,573, Cl. 433-167.000.
Makabe, Hachiro: *See*—
  Kume, Toshiaki; Kakinuma, Toshihide; Makabe, Hachiro; Watanabe, Kazuo; and Takenoya, Hideaki, 4,299,180, Cl. 112-158.00E.
Malaterre, Roger: *See*—
  Paugeras, Pierre; Fremeaux, Pierre; Henry, Edouard; Malaterre, Roger; and Ros, Pierre, 4,299,798, Cl. 422-281.000.
Malecha, Richard J., to Towmotor Corporation. Apparatus for mounting a plurality of control members. 4,299,137, Cl. 74-512.000.
Mallinckrodt, Inc.: *See*—
  Perissamy, Muthunadar P., 4,299,770, Cl. 260-326.470.
Malpass, Dennis B.: *See*—
  Pannin, Loyd W.; Malpass, Dennis B.; and Sanchez, Ramiro, 4,299,781, Cl. 260-665.00R.
Mandler, John J., Jr.: *See*—
  Epstein, Paul; Ballas, John S., Jr.; Van Horn, Joseph M.; and Mandler, John J., Jr., 4,299,234, Cl. 128-698.000.
Manning, Monis J.; and Plummer, William T., to Polaroid Corporation. Photoelectric radiometer for photographic apparatus. 4,299,468, Cl. 356-225.000.
Manning, Ronald G.: *See*—
  Pettijohn, Richard R.; Leung, Charles; Manning, Ronald G.; Reyes, Zoila; and Thackray, Malcolm, 4,299,904, Cl. 430-139.000.
Mansei Kogyo Kabushiki Kaisha: *See*—
  Fukumoto, Katsumi, 4,299,348, Cl. 228-144.000.
Marchelli, Francesco; and Sbuelz, Anes, to Societa Italiana Telecomunicazioni Siemens S.p.A. Circuit arrangement for correlating several isofrequentially stepped counting chains. 4,300,100, Cl. 328-109.000.
Marcus, Frederick; Dikeman, Richard; and Wiggins, Allan A., Jr. Process for space dyeing and texturing synthetic yarns. 4,299,015, Cl. 28-221.000.
Marey, Mohamed, to Robert Bosch GmbH. System for transmitting signals between a television camera and the associated control unit. 4,300,166, Cl. 358-210.000.
Maringer, Melvin F.; and Barlow, Anthony, to National Distillers and Chemical Corp. Electrical tree and water tree resistant polymer compositions. 4,299,713, Cl. 174-110.0SR.
Marino, Armando V.: *See*—
  DeFranco, Thomas P.; and Marino, Armando V., 4,299,016, Cl. 29-25.110.
Markert, Jurgen: *See*—
  Osman, Maged A.; Scheffer, Terry J.; Revesz, Laszlo; and Markert, Jurgen, 4,299,720, Cl. 252-299.100.
Marryman, Milisande L. Linguistically coded alphabet characters. 4,299,577, Cl. 434-170.000.
Marsh, John W. K. Walking aids. 4,299,246, Cl. 135-66.000.
Marshall, Donald E., Jr., to Honeywell Inc. Offset compensation circuit for charge-coupled devices. 4,300,062, Cl. 307-304.000.
Marten, Hans-Friedrich, to Schloemann-Siemag Akt. Rolling mill. 4,299,103, Cl. 72-16.000.
Martin, Eugene R., to SWS Silicones Corporation. Process for treating a textile material. 4,299,879, Cl. 428-266.000.
Martin Marietta Corporation: *See*—
  Layton, Allen C., 4,299,360, Cl. 244-3.130.
Martin, Pierre: *See*—
  Dingwall, John G.; Greuter, Hans; Martin, Pierre; Ackermann, Peter; and Gsell, Laurenz, 4,299,967, Cl. 549-65.000.
Martin, Ronnie L.: *See*—
  Covington, Cecil E.; and Martin, Ronnie L., 4,299,540, Cl. 416-226.000.
Martin, Trevor I.; and Lennon, John M., to Xerox Corporation. Chemical process. 4,299,983, Cl. 364-394.000.
Martin, Wayne A., to United States Steel Corporation. Method for forming a hole through a forged workpiece. 4,299,110, Cl. 72-327.000.
Maruyama, Hiromi; Tokuno, Takashi; Shimizu, Masao; Ishikawa, Kohji; Narumi, Naoaki; and Ohguchi, Osamu, to Nippon Telegraph and Telephone Public Corporation; and Takeca Riken Kogyo Kabushiki Kaisha. Address pattern generator for testing a memory. 4,300,234, Cl. 371-27.000.
Maruyama, Masaki, to Hochiki Corporation. Fire detecting system. 4,300,099, Cl. 328-6.000.
Maruzen Oil Co., Ltd.: *See*—
  Matsumoto, Tadashi; Kuratani, Osamu; Hirose, Yasunori; and Toba, Susumu, 4,299,997, Cl. 568-678.000.
Marvin Glass & Associates: *See*—
  Kulesza, Ralph J.; Hicks, Alan A.; Licitis, Gunars, Jr.; and Morrison, Howard J., 4,299,386, Cl. 273-85.00F.
Maryland Cup Corporation: *See*—
  Gilden, Morton, 4,299,349, Cl. 229-1.50B.
Masaka, Mitusuke, to Jidosha Kiki Co., Ltd. Electromagnetic pumps. 4,299,544, Cl. 417-417.000.
Maschinenfabrik & Eisengiesserei Ed. Mezger AG: *See*—
  Lavanchy, Gerard A.; Mezger, Fritz; and Rossier, Marc-Henri, 4,299,268, Cl. 164-155.000.
Maser, Thomas L., to W. H. Brady Co. Remote membrane switch. 4,300,029, Cl. 200-159.00B.
Massachusetts Institute of Technology: *See*—
  Thilly, William G.; and Skopek, Thomas R., 4,299,915, Cl. 435-6.000.
Masuno, Kouji; Nakayama, Junji; Mizoguchi, Yukio; and Kaneko, Mitsuyoshi, to Ebara Corporation. Process for recovery of pulp mill chemicals. 4,299,652, Cl. 162-30.00K.
Mathe, Tibor: *See*—
  Tungler, Antal; Mathe, Tibor; Petro, Jozsef; and Bende, Zoltan, 4,299,992, Cl. 568-587.000.
Mather, Douglas E.: *See*—
  Messenger, Edward; Mather, Douglas E.; and Phillips, Brinley M., 4,299,740, Cl. 252-545.000.
Matskin, Leonid A.: *See*—
  Chizhikov, Vladimir M.; Matskin, Leonid A.; Fokin, Mikhail N.; Timofeev, Boris P.; Tokar, Mark N.; Balayan, Ruben D.; Trubin, German A.; Melik-Shakhnazarov, Alexandr M.; Barabashov, Dmitry A.; Dmitriev, Vladimir A.; and Vakhlyaev, Sergei V., 4,300,202, Cl. 364-567.000.
Matsuda, Akira; Goshima, Norio; Yasuda, Shigeo; Iwasaki, Motoaki; and Nishino, Hiroshi, to Bridgestone Tire Company Limited; and Mitaka Instrument Company Limited. Tire inner pressure drop alarming service. 4,300,118, Cl. 340-58.000.
Matsuda, Toshio: *See*—
  Ueno, Ryuzo; Matsuda, Toshio; Kanayama, Tatsuo; Tomiyasu, Kunihiko; Fujita, Yatsuka; and Inamine, Shigeo, 4,299,852, Cl. 426-266.000.
Matsuhisa, Tadaaki, to NGK Insulators, Ltd. Method of bonding silicon ceramic members. 4,299,638, Cl. 156-85.000.
Matsukuma, Hitoshi: *See*—
  Kato, Masashi; Obata, Hirozo; Hirata, Minoru; Matsukuma, Hitoshi; Ishikawa, Kunio; and Tanaka, Junichi, 4,299,108, Cl. 72-178.000.
Matsumoto, Hiromi; Kikuma, Toshio; Nakajima, Koe; and Ohnuki, Akira, to Nippon Steel Corporation. Rolling mill with loosely sleeved roll. 4,299,109, Cl. 72-241.000.
Matsumoto, Seiichi: *See*—
  Suzuki, Ryoichi; Matsumoto, Seiichi; Amikura, Takashi; Tsunekawa, Tokuichi; and Uchiyama, Takashi, 4,299,462, Cl. 354-53.000.
Matsumoto, Shinichi: *See*—
  Shinohara, Hiroshi; Otsuka, Yasuhiro; Matsumoto, Shinichi; Furutani, Toshinobu; and Wakizaka, Hiroshi, 4,299,627, Cl. 75-206.000.
Matsumoto, Tadashi; Kuratani, Osamu; Hirose, Yasunori; and Toba, Susumu, to Maruzen Oil Co., Ltd. Process for producing ethylene glycol mono-tert-butyl ether. 4,299,997, Cl. 568-678.000.
Matsumoto, Toru: *See*—
  Soma, Ikuo; Magome, Tamotu; and Matsumoto, Toru, 4,299,902, Cl. 430-125.000.
Matsuoka, Kazunori: *See*—
  Konishi, Hideo; Matsuoka, Kazunori; and Gouya, Takao, 4,300,238, Cl. 455-161.000.
Matsushita Electric Industrial Co., Ltd.: *See*—
  Niu, Tokihide; Yuuzu, Takayoshi; Abe, Ikuzo; and Shigematsu, Koichi, 4,300,032, Cl. 219-10.55B.
  Sagishima, Takayuki; and Kitani, Teruo, 4,300,155, Cl. 358-24.000.
  Sugimoto, Hiroshi; Karasawa, Shinji; Noshi, Kisuke; Ishii, Teruaki; and Matsuzawa, Sigeki, 4,299,259, Cl. 141-1.100.
  Wada, Takamichi; and Terui, Yasuaki, 4,300,163, Cl. 358-163.000.
Matsuura, Katsumi: *See*—
  Fujimatsu, Wataru; Usagawa, Yasushi; Sasaki, Osamu; and Matsuura, Katsumi, 4,299,914, Cl. 430-384.000.

Matsuzawa, Sigeki: *See*—
  Sugimoto, Hiroshi; Karasawa, Shinji; Noshi, Kisuke; Ishii, Teruaki; and Matsuzawa, Sigeki, 4,299,259, Cl. 141-1.100.
Mattel, Inc.: *See*—
  Pimentel, Gary W.; Poznick, Jeffrey B.; and Atwood, Robert W., 4,299,049, Cl. 46-8.000.
  Saffer, Gary M.; Rich, Hubert A.; Carman, David N.; and Fekete, Ferenc, 4,299,548, Cl. 425-173.000.
Matusik, Frank J.: *See*—
  Fitzgerald, J. Vincent; Matusik, Frank J.; and Nelson, Donald W., 4,299,119, Cl. 73-59.000.
Mautz, Karlheinz: *See*—
  Schwarz, Alois; Mautz, Karlheinz; and Stephan, Michael, 4,299,539, Cl. 416-138.000.
Mayo, Alfred M.; and Convers, Charles C., to Pure Power Incorporated. Integrated solar roof system and method of producing same. 4,299,202, Cl. 126-441.000.
McCarthy, Francis L.; and Bach, Thomas H., to Sterling Drug Inc. Floor coating composition. 4,299,749, Cl. 260-29.60Z.
McCaulay, David A., to Standard Oil Company (Indiana). Preparation of 2,6-dimethyldecalin and its isomers. 4,300,008, Cl. 585-360.000.
McClure, Kenneth R., to Dickey Manufacturing Company. Tamper proof plastic security seal. 4,299,417, Cl. 292-320.000.
McConnell, Richard L.; Trotter, Jimmy R.; and Suhlett, Bobby J., to Eastman Kodak Company. Polyester adhesives. 4,299,933, Cl. 525-170.000.
McConnell, Richard L.: *See*—
  Petke, Frederick D.; and McConnell, Richard L., 4,299,934, Cl. 525-173.000.
McCord, Dick P.: *See*—
  Athey, Stuart E.; and McCord, Dick P., 4,299,115, Cl. 73-15.00B.
McCord, James W. Vapor generating device. 4,299,663, Cl. 202-170.000.
McCormick, Harold E., to Ramsey Corporation. Piston ring and method of making same. 4,299,401, Cl. 277-216.000.
McDaniel, Max P.; and Meister, John J., to Phillips Petroleum Company. Large pore volume olefin polymerization catalysts. 4,299,731, Cl. 252-451.000.
McDonald, Daniel P.: *See*—
  Parks, Kenneth L.; Clevenger, Kyle D.; and McDonald, Daniel P., 4,299,804, Cl. 423-321.00R.
McDonald, John F.: *See*—
  Scarton, Henry A.; Kennedy, Warren C.; and McDonald, John F., 4,300,033, Cl. 219-70.000.
McDonnell Douglas Corporation: *See*—
  Cahill, Richard F.; and Udd, Eric, 4,299,490, Cl. 356-350.000.
McEnery, James O.; Morton, Frank W.; and O'Dea, John J., to Boart International Limited. Down-the-hole drilling. 4,299,298, Cl. 175-418.000.
McEvoy, Francis J.; Wright, William B., Jr.; Birnberg, Gary H.; and Albright, Jay D., to American Cyanamid Company. ω-Heteroaroyl(-propionyl or butyryl)-L-prolines. 4,299,769, Cl. 260-326.350.
McGrath, William H. Earth energy sink. 4,299,270, Cl. 165-45.000.
McGregor, Alastair J. H.: *See*—
  Robota, Stephen; McGregor, Alastair J. H.; and Trollope, Gregory A. R., 4,299,606, Cl. 62-28.000.
McGregor, James M., to Climate Cycling Corporation. Heating and cooling system employing remote buried storage areas. 4,299,277, Cl. 165-48.00S.
McKinney, David D. Dental saw blade. 4,299,572, Cl. 433-144.000.
McMahon, Donald H., to Sperry Corporation. Apparatus for processing digital data representative of a two-dimensional image. 4,300,122, Cl. 340-146.3MA.
McMillin, John V.; and Schroeder, Dale W., to Westinghouse Electric Corp. Optical reading system. 4,300,123, Cl. 340-146.30Z.
McSpadden, John T., to Inventive Technology International, Inc. Dental file. 4,299,571, Cl. 433-102.000.
Mead Corporation, The: *See*—
  Hwang, Ki-Sup, 4,299,630, Cl. 106-22.000.
  Nelson, Douglas O.; and Freund, Donald F., 4,299,589, Cl. 493-109.000.
Meckel, Benjamin B., to Spin Physics, Inc. Magnetic target plate for use in magnetron sputtering of magnetic films. 4,299,678, Cl. 204-192.00M.
Mefferd, Roy J. Hand tool and method for using same. 4,299,144, Cl. 81-3.00R.
Meffert, Alfred; Scheuermann, Fanny; and Werdehausen, Achim, to Henkel Kommanditgesellschaft auf Aktien. Stable aqueous or aqueous-alcoholic solutions of fat-soluble perfume oils. 4,299,737, Cl. 252-522.00R.
Meickl, Gerhard, to Streif oHG. Beam connector. 4,299,509, Cl. 403-252.000.
Meier, Gerard B. Method for cutting and maintaining separate segments of a gummous comestible. 4,299,148, Cl. 83-34.000.
Meier, Karl-Heinz: *See*—
  Angersbach, Wolfgang; and Meier, Karl-Heinz, 4,300,082, Cl. 318-614.000.
Mein, Peter G.; and Reidies, Arno H., to Carus Corporation. Heavy metal-manganese oxidation catalysts and process of producing same. 4,299,735, Cl. 252-465.000.
Meisner, Alfred, to Diehl GmbH & Co. Portable, rechargeable power supply. 4,300,087, Cl. 320-2.000.
Meister, John J.: *See*—
  McDaniel, Max P.; and Meister, John J., 4,299,731, Cl. 252-451.000.
Melcher, Franz-Josef: *See*—
  Knothe, Erich; Blawert, Dieter; and Melcher, Franz-Josef, 4,299,299, Cl. 177-264.000.
Melekhov, Rostislav K.: *See*—
  Azbukin, Vladimir G.; Balandin, Jury F.; Gorynin, Igor V.; Gluskin, Lev Y.; Zvezdin, Jury I.; Ignatenko, Alexandr O.; Krasnov, Alexandr N.; Melekhov, Rostislav K.; Osipova, Inna S.; Pavlov, Valery N.; Khokhlov, Alexandr A.; Stepanov, Ivan A.; Anfimov, Alexandr F.; Ardentov, Vasily V.; Burmakin, Viktor M.; Ignatov, Viktor A.; Rokhlin, Eduard A.; and Zhitkov, Vladimir V., 4,299,623, Cl. 75-128.00R.
Melern Development: *See*—
  Studer, Lewis O., 4,299,336, Cl. 222-80.000.
Melik-Shakhnazarov, Alexandr M.: *See*—
  Chizhikov, Vladimir M.; Matskin, Leonid A.; Fokin, Mikhail N.; Timofeev, Boris P.; Tokar, Mark N.; Balayan, Ruben D.; Trubin, German A.; Melik-Shakhnazarov, Alexandr M.; Barabashov, Dmitry A.; Dmitriev, Vladimir A.; and Vakhlyaev, Sergei V., 4,300,202, Cl. 364-567.000.
Mercer, William R.: *See*—
  Wurst, William C.; Mercer, William R.; and Brodeur, Lester R., 4,300,139, Cl. 343-103.000.
Merck & Co., Inc.: *See*—
  Liu, Thomas M. H.; Shinkai, Ichiro; and Sletzinger, Meyer, 4,299,974, Cl. 560-148.000.
Mershon, James M., to National Service Industries. Lighting fixture mount. 4,300,190, Cl. 362-404.000.
Messenger, Edward; Mather, Douglas E.; and Phillips, Brinley M. Concentrated organic sulphonate solutions. 4,299,740, Cl. 252-545.000.
Messerschmitt-Boelkow-Blohm Gesellschaft mit beschraenkter Haftung: *See*—
  Schwarz, Alois; Mautz, Karlheinz; and Stephan, Michael, 4,299,539, Cl. 416-138.000.
Metal Box Limited: *See*—
  Collins, Basil C.; Bartholomew, Michael; and Perry, Roy H., 4,299,031, Cl. 33-18.00R.
Metallgesellschaft Aktiengesellschaft: *See*—
  Klein, Helmut; and John, Kamar P., 4,299,667, Cl. 203-42.000.
Meuschke, Robert E.; and Wolfe, Donald L., to Westinghouse Electric Corp. Radiation shield ring assembly and method of disassembling components of a nuclear steam generator using such assembly. 4,299,638, Cl. 250-506.000.
Mezger, Fritz: *See*—
  Lavanchy, Gerard A.; Mezger, Fritz; and Rossier, Marc-Henri, 4,299,268, Cl. 164-155.000.
Michel, David J.; and Smith, Hugh H., to United States of America, Navy. Niobium-base alloy. 4,299,625, Cl. 75-174.000.
Micro Sensors, Inc.: *See*—
  Piso, John S.; and Roberge, James K., 4,300,094, Cl. 324-65.00R.
Microcomputer Systems Corp.: *See*—
  Gilovich, Paul A.; and Tung, Joseph S., 4,300,176, Cl. 360-105.000.
Midland, Richard W., to Zenith Radio Corporation. Means for enhancing uniformity in electron beam spot size in television picture tubes. 4,300,157, Cl. 358-74.000.
Midland-Ross Corporation: *See*—
  Schregenberger, Alex J., 4,299,036, Cl. 34-16.000.
Miesch, Michel: *See*—
  Franck-Neumann, Michel; and Miesch, Michel, 4,299,973, Cl. 560-124.000.
Miguel, Anthony S.; Perry, John L.; and Wittman, Gary R., to United States of America, Navy. Intumescent material-honeycomb thermal barrier. 4,299,872, Cl. 428-117.000.
Mihalich, Stephen K.; and Dicke, Curtis J., to National Semiconductor Corporation. CMOS Voltage regulator circuit. 4,300,061, Cl. 307-297.000.
Mikitenko, Paul; and Asselineau, Lionel, to Institut Francais du petrole. Process for the preparation and isolation of methyl-tert-butyl ether. 4,299,999, Cl. 568-697.000.
Miller, Frederick A.; and Wooff, Edward A., Jr., to Circon Corporation. Automatic iris control system. 4,300,167, Cl. 358-210.000.
Miller, Gary K.: *See*—
  Kuck, Mark A.; and Miller, Gary K., 4,299,806, Cl. 423-322.000.
Miller, John H., to Hy-Way Heat Systems, Inc. Hot oil heater with helical coil baffle. 4,299,194, Cl. 122-33.000.
Miller, John H. Emergency pipeline shut-off apparatus. 4,299,255, Cl. 138-89.000.
Miller, Kirk D.; Flood, John B.; Dimou, George; Kara, Frederick E.; and Amos, Richard W., to Canron Inc. Molten metal treatment. 4,299,624, Cl. 75-130.00R.
Miller, Robert C.: *See*—
  Bradley, John J.; Miller, Robert C.; Miu, Ming T.; Shen, Jian-Kuo; and Staplin, Theodore R., Jr., 4,300,193, Cl. 364-200.000.
Mills, Alfred L.; Reekie, John; and Williams, John A., to United Kingdom Atomic Energy Authority. Storage of radioactive liquids. 4,299,271, Cl. 165-47.000.
Milutzki, Udo; Schotte, Dietwald; and Johnson, Jeffrey, to Braun Aktiengesellschaft. Pickup arm control mechanism and electrical circuitry therefore. 4,300,228, Cl. 369-216.000.
Minami, Masana; and Sekizawa, Hidekazu, to Tokyo Shibaura Electric Co., Ltd. Apparatus for detecting the defects of a pattern with directional characteristics using a filter having arm sections of curved shape. 4,299,443, Cl. 350-162.0SF.
Minasy, Arthur J., to Knogo Corporation. Fastening means. 4,299,040, Cl. 40-20.00R.

Minezaki, Shigehiro: *See*—
Funada, Fumiaki; Takamatsu, Toshiaki; and Minezaki, Shigehiro, 4,299,450, Cl. 350-360.000.
Minner, Willy, to Licentia Patent-Verwaltungs-G.m.b.H. Electronic switch for converting a pulse signal into an analog signal. 4,300,058, Cl. 307-261.000.
Minnesota Mining and Manufacturing Company: *See*—
Arens, Robert P., 4,299,880, Cl. 428-304.000.
Barnes, Charles A.; and von Behren, Robert A., 4,300,179, Cl. 360-127.000.
Gilkeson, David C.; and Muehlhausen, Robert A., 4,299,480, Cl. 355-66.000.
Jones, David C.; and Bredahl, Timothy D., 4,299,874, Cl. 428-143.000.
Minotti, Luigi: *See*—
Conti, Dino; Minotti, Luigi; and Sacrini, Egeo, 4,299,718, Cl. 252-186.000.
Minoura, Kazuo, to Canon Kabushiki Kaisha. Scanning optical system having at least two reflecting surfaces and an afocal optical system. 4,299,438, Cl. 350-6.600.
Miolo, Lino. Magnetic chessboard with self-centering pieces. 4,299,389, Cl. 273-239.000.
Misawa, Toshihiko: *See*—
Ogihara, Masato; Misawa, Toshihiko; and Sue, Takaji, 4,299,380, Cl. 271-9.000.
Miscelatori Dosatori Elettronica MIDEL S.r.l.: *See*—
Bassetti, Aldo, 4,299,500, Cl. 366-198.000.
Mischler, Werner: *See*—
Tlach, Hugo; Leifels, Klaus-Dieter; and Mischler, Werner, 4,299,654, Cl. 162-164.0EP.
Mitaka Instrument Company Limited: *See*—
Matsuda, Akira; Goshima, Norio; Yasuda, Shigeo; Iwasaki, Motoaki; and Nishino, Hiroshi, 4,300,118, Cl. 340-58.000.
Mitsubishi Chemical Ind., Ltd.: *See*—
Aoki, Motohisa; Kawakami, Isao; and Nishihara, Masami, 4,299,719, Cl. 252-188.000.
Mitsubishi Denki Kabushiki Kaisha: *See*—
Kato, Masaru; Takeuchi, Hitoshi; and Horiuchi, Toshiaki, 4,299,889, Cl. 428-569.000.
Takeyama, Tetsu; Azuma, Kenkoku; Ikeda, Akira; Yamamoto, Toshie; and Katsurada, Shigeho, 4,299,599, Cl. 55-180.000.
Mitsubishi Jukogyo Kabushiki Kaisha: *See*—
Hayama, Yasunobu; Tanouchi, Kuniaki; Abe, Mitsuhiro; and Ohkura, Katsuhiro, 4,299,104, Cl. 72-20.000.
Mitsubishi Petrochemical Co., Ltd.: *See*—
Shibatani, Haruo; Ogomori, Yuji; Kameda, Takashi; and Yanagi, Yoshio, 4,300,002, Cl. 568-817.000.
Mitsuboshi Belting Ltd.: *See*—
Imamura, Junji, 4,299,587, Cl. 474-262.000.
Mitsuhashi, Yasuo; Kiuchi, Masashi; Takasu, Yoshio; Fukumoto, Hiroshi; Hino, Takashi; and Uchiyama, Masaki, to Canon Kabushiki Kaisha. Electrostatic image magnetic developing process. 4,299,900, Cl. 430-122.000.
Mitsui Petrochemical Industries Ltd.: *See*—
Shiomi, Teiichi; Saito, Tadao; and Nagano, Riichiro, 4,299,754, Cl. 260-33.6UA.
Mitsui, Sadao; Takahashi, Minoru; and Watanabe, Keiichi, to TDK Electronics Co, Ltd. Device for indicating an abnormal condition in an ultrasonic nebulizer. 4,300,131, Cl. 340-618.000.
Mitsui Toatsu Chemicals, Inc.: *See*—
Yamamoto, Ryuichi; Hirai, Yutaka; Takagi, Akinobu; and Tashima, Zyunzi, 4,299,766, Cl. 260-239.30R.
Miu, Ming T.: *See*—
Bradley, John J.; Miller, Robert C.; Miu, Ming T.; Shen, Jian-Kuo; and Staplin, Theodore R., Jr., 4,300,193, Cl. 364-200.000.
Bradley, John J.; Miu, Ming T.; and Shen, Jian-Kuo, 4,300,194, Cl. 364-200.000.
Miyanaka, Motoshi: *See*—
Todo, Kenji; Miyanaka, Motoshi; and Tanaka, Toshio, 4,299,556, Cl. 431-29.000.
Miyata, Shigeo; and Kuroda, Masataka, to Kyowa Chemical Industry Co. Ltd. Method for inhibiting the thermal or ultraviolet degradation of thermoplastic resin and thermoplastic resin composition having stability to thermal or ultraviolet degradation. 4,299,759, Cl. 260-45.70R.
Miyoshi, Hajime; Okabayashi, Ikuo; and Asanagi, Etsuo, to Chiyoda Chemical Engineering & Construction Co., Ltd. Method for improving the strength of a water-saturated soft soil. 4,299,516, Cl. 405-266.000.
Mizoguchi, Yukio: *See*—
Masuno, Kouji; Nakayama, Junji; Mizoguchi, Yukio; and Kaneko, Mitsuyoshi, 4,299,652, Cl. 162-30.00K.
Mizokami, Kazunori, to Olympus Optical Company, Ltd. Diaphragm control circuit for camera. 4,299,459, Cl. 354-23.00D.
Mizuta, Kazuyuki: *See*—
Asayama, Yoshiaki; and Mizuta, Kazuyuki, 4,299,121, Cl. 73-118.000.
Mobay Chemical Corporation: *See*—
Witman, Mark W., 4,299,928, Cl. 525-67.000.
Mobil Oil Corporation: *See*—
Downing, Charles R.; and Kaufman, Harold A., 4,299,618, Cl. 71-121.000.
Haag, Werner O.; Rodewald, Paul G.; and Weisz, Paul B., 4,300,009, Cl. 585-408.000.
Kuehl, Guenter H., 4,299,686, Cl. 208-111.000.
Pelrine, Bruce P.; and Walsh, Dennis E., 4,299,594, Cl. 44-50.000.
Rollmann, Louis D., 4,300,011, Cl. 585-467.000.
Mocas, Verlin A., to Richardson Company, The. Method for forming battery terminals and terminals produced thereby. 4,299,891, Cl. 429-179.000.
Mochida, Yutaka: *See*—
Ito, Yasuro; Higuchi, Yoshiro; Mochida, Yutaka; Kemmochi, Sampei; Kaga, Hideharu; and Yamamoto, Yasuhiro, 4,299,633, Cl. 106-97.000.
Mody, Dinesh I.: *See*—
Kelley, Thomas F.; Mody, Dinesh I.; and Mountain, Charles F., 4,299,794, Cl. 422-68.000.
Moffitt, Bryan S., to Bell Telephone Laboratories, Incorporated. Digital system error correction arrangement. 4,300,231, Cl. 370-86.000.
Mohring, Edgar; Muller, Hanns P.; and Wagner, Kuno, to Bayer Aktiengesellschaft. Process for the preparation of low molecular polyhydroxyl compounds. 4,300,003, Cl. 568-863.000.
Molins Limited: *See*—
Greenhead, David L.; and Heybourn, Frank, 4,299,322, Cl. 198-347.000.
Hudson, Robert J., 4,300,211, Cl. 365-110.000.
Momiyama, Kikuo; and Kamata, Shigeru, to Canon Kabushiki Kaisha. Zoom lens system with movable diaphragm. 4,299,453, Cl. 350-426.000.
Mones, Arthur H.: *See*—
Neuhoff, Donald; Mones, Arthur H.; and Lam, Kit M., 4,299,876, Cl. 428-208.000.
Monkenbusch, Alfons: *See*—
Bruning, Paul; and Monkenbusch, Alfons, 4,299,353, Cl. 233-7.000.
Monley, Robert E.: *See*—
Schneider, Urban A.; Monley, Robert E.; Glatthorn, Raymond H.; and Nelson, Robert L., 4,300,034, Cl. 219-75.000.
Monma, Hisayoshi; and Katagiri, Shigenobu, to Hitachi Koki Company, Limited. Failure detection method and circuit for stepping motors. 4,300,085, Cl. 318-696.000.
Monsanto Company: *See*—
Brandt, Eva J.; and Asculai, Samuel S., 4,299,814, Cl. 424-1.000.
Coran, Aubert Y.; and Patel, Raman, 4,299,931, Cl. 525-95.000.
Li, Tao P., 4,300,005, Cl. 570-224.000.
Montedison S.p.A.: *See*—
Conti, Dino; Minotti, Luigi; and Sacrini, Egeo, 4,299,718, Cl. 252-186.000.
Piccardi, Paolo; Confalonieri, Giovanni; Da Col, Lino; and Ramella, Pier G., 4,299,837, Cl. 424-273.00B.
Montee, Robert F.: *See*—
Couleur, John F.; and Montee, Robert F., 4,300,192, Cl. 364-200.000.
Monticelli, Mario; and Barbero, Piero, to DEA Digital Electronic Automation S.p.A. Revolving fixture for supporting tools. 4,299,370, Cl. 248-278.000.
Montoya, Arsenio P., to United States of America, Energy. Resistance after firing protected electric match. 4,299,168, Cl. 102-202.110.
Moore, Stanley R.: *See*—
Crisman, Thomas L.; Moore, Stanley R.; and Weaver, Harry R., 4,299,100, Cl. 62-457.000.
Morgan, Harvey L. Single sideband modulation. 4,300,237, Cl. 455-109.000.
Morgenfruh, Rudolph A.; and Burnham, William W., to Hazeltine Corporation. Process control apparatus. 4,300,158, Cl. 358-80.000.
Mori, Fumio: *See*—
Omura, Yoshiaki; Mori, Fumio; Fujita, Yoshiji; Nishida, Takashi; Hosogai, Takeo; Aihara, Sukeji; Tamai, Yoshin; Wada, Fumio; and Itoi, Kazuo, 4,299,839, Cl. 424-274.000.
Morihara, Ko: *See*—
Hayashi, Kohtaro; Morihara, Ko; and Nakamura, Kohji, 4,299,793, Cl. 264-564.000.
Morimoto, Takeshi: *See*—
Oda, Yoshio; Morimoto, Takeshi; and Suzuki, Kohji, 4,299,682, Cl. 204-265.000.
Moritani, Nakanobu: *See*—
Oda, Hajime; Moritani, Nakanobu; and Samejima, Toshihide, 4,300,221, Cl. 368-22.000.
Morokawa, Shigeru: *See*—
Fujita, Hiroo; Tsuzuki, Akira; and Morokawa, Shigeru, 4,300,137, Cl. 340-765.000.
Morone, Joseph A., III: *See*—
Fayal, James E.; and Morone, Joseph A., III, 4,299,111, Cl. 72-342.000.
Morris, Hugh C.: *See*—
Hakes, Gary A.; Shook, Norma G.; Cackley, George W.; Burdette, Stephen D.; and Morris, Hugh C., 4,299,300, Cl. 180-6.200.
Morris, William F. Process for treating cereal grains. 4,299,847, Cl. 426-18.000.
Morrison, Clifton H.: *See*—
Huston, Larry; Morrison, Clifton H.; Rasmussen, Glenn; and Tsuchiya, Takuzo, 4,299,150, Cl. 83-110.000.
Morrison, Howard J.: *See*—
Kulesza, Ralph J.; Hicks, Alan A.; Licitis, Gunars, Jr.; and Morrison, Howard J., 4,299,386, Cl. 273-85.00F.
Morton, Edward W.: *See*—
Skwirut, Henry; Young, Robert G.; and Morton, Edward W., 4,300,073, Cl. 315-53.000.
Morton, Frank W.: *See*—
McEnery, James O.; Morton, Frank W.; and O'Dea, John J., 4,299,298, Cl. 175-418.000.

Morton, James W.: *See*—
Hartman, Kenneth O.; and Morton, James W., 4,299,636, Cl. 149-19.400.
Mose, Luciano; Schurig, Helmuth; and Strasser, Bernd, to UHDE GmbH. Hydrochloric acid electrolyzer. 4,299,681, Cl. 204-255.000.
Moss, Philip H.: *See*—
Knifton, John F.; and Moss, Philip H., 4,299,985, Cl. 564-467.000.
Motoren-und- Turbinen-Union Friedrichshafen GmbH: *See*—
Deutschmann, Herbert, 4,299,090, Cl. 60-612.000.
Motorola, Inc.: *See*—
Kelley, Stephen H.; and Lillis, William J., 4,300,023, Cl. 179-170.0NC.
Raghunathan, Kuppuswamy; and Smith, Philip S., 4,300,195, Cl. 364-200.000.
Remedi, James J.; and Peterson, Alan K., 4,300,065, Cl. 307-571.000.
Mougin, Georges L., to ITI, Limited. Method of towing large masses at sea. 4,299,184, Cl. 114-253.000.
Moulton, Joseph R.: *See*—
Carrow, William W.; and Moulton, Joseph R., 4,299,575, Cl. 434-11.000.
Mountain, Charles F.: *See*—
Kelley, Thomas F.; Mody, Dinesh I.; and Mountain, Charles F., 4,299,794, Cl. 422-68.000.
Mouri, Takenori; and Kayama, Hiroyuki, to Toyo Seikan Kaisha Limited. Cellulase treatment of orange material. 4,299,849, Cl. 426-51.000.
Moxham Industrial Pty. Ltd.: *See*—
Wood, Kenneth H., 4,299,014, Cl. 24-197.000.
Moyles, Daniel C.: *See*—
Wever, Ruben; and Moyles, Daniel C., 4,300,024, Cl. 179-175.20A.
Mroz, Fredrick. Stoker structure. 4,299,177, Cl. 110-101.0CF.
Muehlhausen, Robert A.: *See*—
Gilkeson, David C.; and Muehlhausen, Robert A., 4,299,480, Cl. 355-66.000.
Mulder, Roelof: *See*—
Schrodter, Klaus; Ehlers, Klaus-Peter; and Mulder, Roelof, 4,299,803, Cl. 423-308.000.
Muller, Erich: *See*—
Buluschek, Bruno; Magerli, Walter; and Muller, Erich, 4,299,362, Cl. 248-49.000.
Muller, Gerhard: *See*—
Dix, Ernst; Muller, Gerhard; Notzel, Hans; Walther, Willy; and Zahn, Detlef, 4,299,170, Cl. 102-355.000.
Muller, Hanns P.: *See*—
Mohring, Edgar; Muller, Hanns P.; and Wagner, Kuno, 4,300,003, Cl. 568-863.000.
Muller, Hans, to Grapha-Holding AG. Apparatus for singularizing and opening stacked folded sheets. 4,299,378, Cl. 270-54.000.
Munford, James A.: *See*—
Etzel, John G.; and Munford, James A., 4,299,492, Cl. 356-386.000.
Munker, Gert, to Palitex Project Company GmbH. Centering plate for supporting a yarn carrier tube. 4,299,357, Cl. 242-18.0DD.
Muraki, Hideaki: *See*—
Fujitani, Yoshiyasu; Muraki, Hideaki; Kondoh, Shiroh; Tomita, Makoto; Yokota, Kouji; and Sobukawa, Hideo, 4,299,734, Cl. 252-462.000.
Muramatsu, Tateo; and Kurihara, Mamoru, to Bridgestone Tire Co., Ltd. Collapsible rubber dam. 4,299,514, Cl. 405-115.000.
Muratore, Antonio: *See*—
Busacca, Guido; and Muratore, Antonio, 4,300,105, Cl. 331-83.000.
Murphy, Edward J., to DeSoto, Inc. Polymerizable monoethylenic carboxylic acids which decarboxylate on heating. 4,299,979, Cl. 562-561.000.
Musschoot, Albert, to General Kinematics Corporation. Apparatus for handling a mold box in a vacuum casting system. 4,299,692, Cl. 209-1.000.
Mustakallio, Kimmo K.; Pippuri, Aino K.; and Honkanen, Erkki J., to Orion-yhtyma Oy. Dihydroxy-acylanthrones having anti-psoriatic activity. 4,299,846, Cl. 424-331.000.
Mutsubishi Denki Kabushiki Kaisha: *See*—
Asayama, Yoshiaki; and Mizuta, Kazuyuki, 4,299,121, Cl. 73-118.000.
Myers, George D.; and Busch, Lloyd E., to Ashland Oil, Inc. Carbometallic oil conversion with controlled $CO:CO_2$ ratio in regeneration. 4,299,687, Cl. 208-113.000.
Myers, James E.; Kennedy, Tom E.; and Perey, Arthur, to Tyler Refrigeration Corporation. Open front refrigeration system. 4,299,099, Cl. 62-256.000.
Myl, Alfred D.: *See*—
Hansen, Hans J.; Myl, Alfred D.; and Vandevoorde, Jacques P., 4,299,815, Cl. 424-1.000.
N/S Car Wash Enterprises, Inc.: *See*—
Ennis, George T., 4,299,003, Cl. 15-53.0AB.
Naficy, Sadeque S. Breast prosthesis with biologically absorbable outer container. 4,298,998, Cl. 3-36.000.
Nagahara, Yasumori, to Ricoh Company, Ltd. Scanning method and apparatus applicable to variable magnification copying machines. 4,299,475, Cl. 355-8.000.
Nagano, Riichiro: *See*—
Shiomi, Teiichi; Saito, Tadao; and Nagano, Riichiro, 4,299,754, Cl. 260-33.6UA.
Nagasawa, Kohtaro: *See*—
Ochi, Hideo; Shibata, Yumi; and Nagasawa, Kohtaro, 4,299,911, Cl. 430-286.000.
Nagata, Kozaburo: *See*—
Nomura, Takao; Taguchi, Yoshio; Nagata, Kozaburo; and Isaka, Takuji, 4,299,924, Cl. 521-131.000.
Nagel, Dieter: *See*—
Wagner, Gerhard; Nagel, Dieter; and Kessler, Georg, 4,299,002, Cl. 14-2.400.
Nagin, Tony, Jr.; and Nagin, Tony, Sr. Chain guide and mounting means. 4,299,585, Cl. 474-140.000.
Nagin, Tony, Sr.: *See*—
Nagin, Tony, Jr.; and Nagin, Tony, Sr., 4,299,585, Cl. 474-140.000.
Naka, Junichi: *See*—
Wada, Takanori; Sano, Hitoshi; Satu, Shigekatsu; Saiki, Yukihiro; Shimizu, Keisuke; Hirata, Masanori; Naka, Junichi; Takahashi, Takayoshi; Ishii, Toshiaki; and Kamiki, Toshikazu, 4,299,855, Cl. 426-512.000.
Nakagawa, Masahiro: *See*—
Sawada, Kiyoshi; Ozawa, Nobuo; Oota, Katsuhiko; Narahara, Takefumi; Nakagawa, Masahiro; Fujimori, Yoshinobu, deceased; and Fujimori, Tomoyoshi, heir, 4,299,524, Cl. 414-117.000.
Nakai, Toshio: *See*—
Watanabe, Tomoyoshi; Nakai, Toshio; Kuzuya, Susumu; Onoda, Hiroshi; Asai, Akira; Iwase, Takayuki; and Nakamura, Kazuo, 4,299,503, Cl. 400-161.500.
Nakajima, Koe: *See*—
Matsumoto, Hiromi; Kikuma, Toshio; Nakajima, Koe; and Ohnuki, Akira, 4,299,109, Cl. 72-241.000.
Nakamura, Kazuo: *See*—
Watanabe, Tomoyoshi; Nakai, Toshio; Kuzuya, Susumu; Onoda, Hiroshi; Asai, Akira; Iwase, Takayuki; and Nakamura, Kazuo, 4,299,503, Cl. 400-161.500.
Nakamura, Kenichi: *See*—
Fujii, Masaharu; and Nakamura, Kenichi, 4,300,047, Cl. 250-330.000.
Nakamura, Kohji: *See*—
Hayashi, Kohtaro; Morihara, Ko; and Nakamura, Kohji, 4,299,793, Cl. 264-564.000.
Nakamura, Koji: *See*—
Tsuiki, Hideo; Kikuchi, Yoshiyasu; Kirii, Hiroshi; and Nakamura, Koji, 4,300,136, Cl. 340-747.000.
Nakamura, Norio; Tominaga, Satoshi; and Kawata, Takashi, to Ishikawajima-Harima Jukogyo Kabushiki Kaisha. Combustion control system for burning installation with calcining burner. 4,299,560, Cl. 432-36.000.
Nakamura, Yoshiaki: *See*—
Kondo, Kazuyoshi; and Nakamura, Yoshiaki, 4,299,112, Cl. 72-354.000.
Nakao, Sho: *See*—
Shiba, Keisuke; Nakao, Sho; and Toyama, Tadao, 4,299,912, Cl. 430-302.000.
Nakauchi, Hiroshi; Koyanagi, Katubumi; Kato, Hiroaki; Takafuji, Yutaka; Inami, Yasuhiko; and Uede, Hisashi, to Sharp Kabushiki Kaisha. Electric memory detector in an ECD driver. 4,300,138, Cl. 340-785.000.
Nakayama, Junji: *See*—
Masuno, Kouji; Nakayama, Junji; Mizoguchi, Yukio; and Kaneko, Mitsuyoshi, 4,299,652, Cl. 162-30.00K.
Nakayasu, Kazuo; Furuya, Osamu; and Hosaki, Yoshihiko, to Showa Denko Kabushiki Kaisha. Process for separating iminodiacetic acid from aqueous glycine solution. 4,299,978, Cl. 562-554.000.
Nakazaki, Yasunori; and Asakawa, Tatsoshi, to Kabushiki Kaisha Suwa Seikosha. Electronic timepiece. 4,300,224, Cl. 368-201.000.
Nama, Donald. Magnetic coded card acceptor. 4,300,041, Cl. 235-449.000.
Namboodri, Chettoor G.: *See*—
Gregorian, Razmic S.; and Namboodri, Chettoor G., 4,299,591, Cl. 8-477.000.
Nanba, Taro, to Yugenkaisha Nakaya Nokogirikikai Seisakusho. Apparatus for automatically profile-forming saw teeth. 4,299,143, Cl. 76-43.000.
Nanjo, Motoyuki; Watanabe, Tsutomu; Koshibe, Shigeru; and Azuma, Keiji, to Sumitomo Bakelite Company Limited. Process for producing quick-curing phenolic resin. 4,299,947, Cl. 528-139.000.
Nankai Tekko Co., Ltd.: *See*—
Korosue, Akira, 4,299,581, Cl. 474-69.000.
Nanthavong, Souli: *See*—
Pigerol, Charles; Schaefer, Michel; and Nanthavong, Souli, 4,299,768, Cl. 260-326.250.
Nanus, Gregory: *See*—
Resch, David; and Nanus, Gregory, 4,299,388, Cl. 273-143.00R.
Narahara, Takefumi: *See*—
Sawada, Kiyoshi; Ozawa, Nobuo; Oota, Katsuhiko; Narahara, Takefumi; Nakagawa, Masahiro; Fujimori, Yoshinobu, deceased; and Fujimori, Tomoyoshi, heir, 4,299,524, Cl. 414-117.000.
Narasaki, Hideo: *See*—
Suzuki, Hiroshi; Narasaki, Hideo; Seki, Sigeru; Endo, Kiichi; and Hirose, Takao, 4,299,738, Cl. 252-541.000.
Narisawa, Shizuo; and Oyamada, Takeo, to Sumitomo Chemical Company, Limited. Process for producing aqueous emulsions of vinyl chloride/vinyl ester/ethylene copolymer. 4,299,941, Cl. 526-273.000.
Nartron Corporation: *See*—
Bull, David W., 4,300,026, Cl. 200-153.00J.
Narumi, Naoaki: *See*—
Maruyama, Hiromi; Tokuno, Takashi; Shimizu, Masao; Ishikawa, Kohji; Narumi, Naoaki; and Ohguchi, Osamu, 4,300,234, Cl. 371-27.000.

National Distillers and Chemical Corp.: *See*—
Hinnenkamp, James A.; and Kwiatek, Jack, 4,299,758, Cl. 260-45.70R.
Maringer, Melvin F.; and Barlow, Anthony, 4,299,713, Cl. 174-110.0SR.
National Gypsum Company: *See*—
Bryant, Robert S., II, 4,299,563, Cl. 432-58.000.
National Metal and Refining Company, Ltd.: *See*—
Fitzgerald, J. Vincent; Matusik, Frank J.; and Nelson, Donald W., 4,299,119, Cl. 73-59.000.
National Mine Service Company: *See*—
LeBegue, Maurice K.; and Herron, Charles R., 4,299,424, Cl. 299-93.000.
National Semiconductor Corporation: *See*—
Mihalich, Stephen K.; and Dicke, Curtis J., 4,300,061, Cl. 307-297.000.
National Service Industries: *See*—
Mershon, James M., 4,300,190, Cl. 362-404.000.
Nauomidis, Aristides: *See*—
Luhleich, Hartmut; Pflaum, Peter; Dias, Francisco J.; Nauomidis, Aristides; Schirbach, Arno; and Nickel, Hubertus, 4,299,881, Cl. 428-308.000.
Nederlandsch Central Organisatie voor Toegepast-Natuurwetenschappelijk Onderzoek: *See*—
Goudfrooy, Hendrik, 4,299,212, Cl. 128-92.00A.
Nederman, Bill P. Device at hose reels. 4,299,249, Cl. 137-355.170.
Neher, Martin D., to Ciba-Geigy Corporation. Pipe coupling. 4,299,413, Cl. 285-114.000.
Neihart, Tommy R. Fabrication of dental restorations. 4,299,574, Cl. 433-213.000.
Nelson, Donald W.: *See*—
Fitzgerald, J. Vincent; Matusik, Frank J.; and Nelson, Donald W., 4,299,119, Cl. 73-59.000.
Nelson, Douglas G.; and Freund, Donald F., to Mead Corporation, The. Closure assembly positioning apparatus. 4,299,589, Cl. 493-109.000.
Nelson, Robert L.: *See*—
Schneider, Urban A.; Monley, Robert E.; Glatthorn, Raymond H.; and Nelson, Robert L., 4,300,034, Cl. 219-75.000.
Nelson, William T., to Philips Petroleum Company. Synthetic lube oil production. 4,300,006, Cl. 585-10.000.
Neuhoff, Donald; Mones, Arthur H.; and Lam, Kit M., to Honeywell Information Systems Inc. Solderable conductor pattern. 4,299,876, Cl. 428-208.000.
Neuman, Clayton L., to A-1 Engineering, Inc. Apparatus for filtering melted plastic. 4,299,707, Cl. 210-791.000.
Neumann, Alfred. Prefabricated wall facing panels. 4,299,069, Cl. 52-309.400.
New Nippon Electric Co., Ltd.: *See*—
Tanida, Takeyoshi, 4,300,109, Cl. 334-51.000.
New Super Laundry Machine Co.: *See*—
Kamberg, Eduard, 4,299,555, Cl. 431-20.000.
New York Society for the Relief of the Ruptured and Crippled: *See*—
Burstein, Albert H.; and Insall, John N., 4,298,992, Cl. 3-1.911.
Newall Co., Ltd., The: *See*—
Parnum, John D.; and Barber, Nigel T., 4,299,061, Cl. 51-101.00R.
Newsom, Charles R. Method for assembling fabric to an article of furniture. 4,299,645, Cl. 156-258.000.
NGK Insulators, Ltd.: *See*—
Matsuhisa, Tadaaki, 4,299,638, Cl. 156-85.000.
Nichols, Steven F.; and Lulay, Lawrence O., to C & H Printing. Color separation orientation gauge and method. 4,299,165, Cl. 101-150.000.
Nickel, Hubertus: *See*—
Luhleich, Hartmut; Pflaum, Peter; Dias, Francisco J.; Nauomidis, Aristides; Schirbach, Arno; and Nickel, Hubertus, 4,299,881, Cl. 428-308.000.
Niehaus, William C.; and Wemple, Stuart H., to Bell Telephone Laboratories, Incorporated. Semiconductor device gate-drain configuration. 4,300,148, Cl. 357-13.000.
Nielsen, Elgard, to V. Kann Rasmussen Holding A/S. Window lining arrangement, particularly for inclined windows. 4,299,068, Cl. 52-204.000.
Niiro, Yasuhiko: *See*—
Wakabayashi, Hiroharu; and Niiro, Yasuhiko, 4,300,239, Cl. 455-601.000.
Nikkiso Co., Ltd.: *See*—
Ohara, Shozo; and Sunami, Hisakazu, 4,299,541, Cl. 417-12.000.
Nikolaev, Igor V.; Lednikov, Anatoly I.; Goldshtein, Boris G.; and Gornik, Leonid A. Percussive tool angular position device. 4,299,293, Cl. 173-104.000.
Nippon Denki Kagaku Co., Inc.: *See*—
Tanimoto, Fumio; and Omori, Fumihiro, 4,299,863, Cl. 427-140.000.
Nippon Electric Co.: *See*—
Tanaka, Kouichi; and Amazawa, Kiyoshi, 4,300,104, Cl. 330-280.000.
Nippon Electric Co., Ltd.: *See*—
Hirosaki, Botaro, 4,300,229, Cl. 370-20.000.
Ohta, Yoshinori, 4,299,449, Cl. 350-358.000.
Ono, Yuzo, 4,299,437, Cl. 350-3.710.
Tsuiki, Hideo; Kikuchi, Yoshiyasu; Kirii, Hiroshi; and Nakamura, Koji, 4,300,136, Cl. 340-747.000.
Yamashita, Koji; and Oyamada, Takashi, 4,299,344, Cl. 224-242.000.
Nippon Gakki Seizo Kabushiki Kaisha: *See*—
Kumano, Shinzi, 4,299,155, Cl. 84-177.000.
Nippon Kokan Kabushiki Kaisha: *See*—
Ando, Ryo; Araki, Shigeru; Hoshi, Hideaki; and Sato, Kazuyoshi, 4,299,610, Cl. 65-19.000.
Sawada, Kiyoshi; Ozawa, Nobuo; Oota, Katsuhiko; Narahara, Takefumi; Nakagawa, Masahiro; Fujimori, Yoshinobu, deceased; and Fujimori, Tomoyoshi, heir, 4,299,524, Cl. 414-117.000.
Nippon Oil Company, Ltd.: *See*—
Sugiura, Kensuke; Kagaya, Mineo; Aoki, Hiroyuki; and Takehara, Takeitiro, 4,299,714, Cl. 252-73.000.
Nippon Steel Corporation: *See*—
Kato, Masashi; Obata, Hirozo; Hirata, Minoru; Matsukuma, Hitoshi; Ishikawa, Kunio; and Tanaka, Junichi, 4,299,108, Cl. 72-178.000.
Matsumoto, Hiromi; Kikuma, Toshio; Nakajima, Koe; and Ohnuki, Akira, 4,299,109, Cl. 72-241.000.
Nippon Telegraph and Telephone Public Corporation: *See*—
Maruyama, Hiromi; Tokuno, Takashi; Shimizu, Masao; Ishikawa, Kohji; Narumi, Naoaki; and Ohguchi, Osamu, 4,300,234, Cl. 371-27.000.
Nippon Zeon Co. Ltd.: *See*—
Iwata, Riso; Ishikawa, Atsuo; and Komai, Hisataka, 4,299,950, Cl. 528-306.000.
Maeda, Akio; Usui, Tatuo; and Yasuda, Atsushi, 4,299,944, Cl. 528-89.000.
Nishida, Takashi: *See*—
Omura, Yoshiaki; Mori, Fumio; Fujita, Yoshiji; Nishida, Takashi; Hosogai, Takeo; Aihara, Sukeji; Tamai, Yoshin; Wada, Fumio; and Itoi, Kazuo, 4,299,839, Cl. 424-274.000.
Nishihara, Masami: *See*—
Aoki, Motohisa; Kawakami, Isao; and Nishihara, Masami, 4,299,719, Cl. 252-188.000.
Nishikawa, Eiichiro; Shinya, Masuo; Furukawa, Hiroshi; and Kaneko, Katsumi, to Toa Nenryo Kogyo Kabushiki Kaisha. Method of removing oxygen from a gas containing an unsaturated hydrocarbon. 4,299,800, Cl. 423-219.000.
Nishikawa, Masao; Toshimitsu, Yoshihiko; Aoyama, Toshihiko; Takaoka, Tokuro; Aoki, Takashi; and Sato, Yoichi, to Honda Giken Kogyo Kabushiki Kaisha. Power steering device for vehicles. 4,299,302, Cl. 180-148.000.
Nishimiya, Toru, to Tomy Kogyo Co., Inc. Game having a magnetic target capable of holding a plurality of objects. 4,299,387, Cl. 273-119.00A.
Nishimura, Kotaro: *See*—
Tanimura, Nobuyoshi; Fukuta, Hiroshi; Nishimura, Kotaro; and Yasui, Tokumasa, 4,300,213, Cl. 365-190.000.
Nishino, Hiroshi: *See*—
Matsuda, Akira; Goshima, Norio; Yasuda, Shigeo; Iwasaki, Motoaki; and Nishino, Hiroshi, 4,300,118, Cl. 340-58.000.
Nishizawa, Jun-ichi, to Zaidan Hojin Handotai Kenkyu Shinkokai. Change transfer device with PN Junction gates. 4,300,151, Cl. 357-24.000.
Nissan Motor Company, Limited: *See*—
Horii, Hirokazu; and Sasai, Koji, 4,300,117, Cl. 340-52.00D.
Ohtsuka, Kunio, 4,299,315, Cl. 192-3.300.
Sugiura, Kensuke; Kagaya, Mineo; Aoki, Hiroyuki; and Takehara, Takeitiro, 4,299,714, Cl. 252-73.000.
Tsuru, Mario, 4,299,400, Cl. 277-212.0FB.
Nitta, Tatsuo, to Citizen Watch Co., Ltd. Electronic timepiece. 4,300,222, Cl. 368-37.000.
Niu, Tokihide; Yuuzu, Takayoshi; Abe, Ikuzo; and Shigematsu, Koichi, to Matsushita Electric Industrial Co., Ltd. Output control apparatus for a microwave oven. 4,300,032, Cl. 219-10.55B.
Noeske, Heinz: *See*—
Tummes, Hans; Cornils, Boy; and Noeske, Heinz, 4,299,990, Cl. 568-454.000.
Nogami, Taro; and Hirose, Hiroshi, to Hitachi, Ltd. Spectrofluorometer. 4,299,486, Cl. 356-318.000.
Nohara, Akira; Sugihara, Hirosada; and Ukawa, Kiyoshi, to Takeda Chemical Industries, Ltd. 1-Azaxanthone derivatives. 4,299,963, Cl. 546-89.000.
Noiles, Douglas G., to United States Surgical Corporation. Disposable clip applier. 4,299,224, Cl. 128-325.000.
Nokland, Sigmund: *See*—
DeBetta, Joseph G., 4,299,034, Cl. 33-183.00R.
Nolan, Richard A., to RCA Corporation. Color picture tube having improved slit type shadow mask and method of making same. 4,300,069, Cl. 313-403.000.
Nomura, Takao; Taguchi, Yoshio; Nagata, Kozaburo; and Isaka, Takuji, to Toyota Jidosha Kogyo Kabushiki Kaisha; and Sanyo Chemical Ind., Ltd. Polyisocyanurate resin and process for making the same. 4,299,924, Cl. 521-131.000.
Noonan, Edward B.: *See*—
Casson, Harold V.; Crabtree, Grant G.; Kindl, Bruno; and Noonan, Edward B., 4,299,869, Cl. 428-35.000.
Norris, George P., Jr. Intravenous needle insertion device. 4,299,219, Cl. 128-215.000.
Norris, John P. Arrow rest assembly. 4,299,195, Cl. 124-24.00R.
North American Philips Corporation: *See*—
Colak, Sel, 4,300,150, Cl. 357-23.000.
North, Bernard: *See*—
Kennedy, Peter; and North, Bernard, 4,299,631, Cl. 501-91.000.
Northern Telecom Limited: *See*—
Kos, Steven, 4,300,142, Cl. 346-76.0PH.
Noshi, Kisuke: *See*—
Sugimoto, Hiroshi; Karasawa, Shinji; Noshi, Kisuke; Ishii, Teruaki; and Matsuzawa, Sigeki, 4,299,259, Cl. 141-1.100.

Notaro, Giuseppe: *See*—
De Filippis, Pietro; Salvatore, Amedeo; Trama, Luigi; and Notaro, Giuseppe, 4,299,026, Cl. 29-612.000.
Notzel, Hans: *See*—
Dix, Ernst; Muller, Gerhard; Notzel, Hans; Walther, Willy; and Zahn, Detlef, 4,299,170, Cl. 102-355.000.
Nuarc Company, Inc., The: *See*—
Foose, Ralph G.; and Crabtree, John D., 4,300,075, Cl. 315-307.000.
Null, Robert A., to Samsonite Corporation. Mobile luggage case handle assembly. 4,299,313, Cl. 190-18.00A.
Nunes, John F., Jr. Grading machine and blade moving structure therefor. 4,299,290, Cl. 172-4.500.
Nunn, Robert E., to HPM Corporation. Injection molding process utilizing low shear screw. 4,299,792, Cl. 264-328.180.
Nyi, Kayson: *See*—
Emmons, William D.; and Nyi, Kayson, 4,299,761, Cl. 260-42.530.
Oana, Yoshinori: *See*—
Aoki, Mitsugu; Oana, Yoshinori; Kato, Yasuo; and Ishihara, Taketoshi, 4,299,455, Cl. 351-30.000.
Obana, Haruo; Shirakawa, Tadashi; Hikuma, Motohiko; Yasuda, Takeo; Karube, Isao; and Suzuki, Shuichi, to Ajinomoto Company, Incorporated. Method for determining the concentration of an L-amino acid in fermentation. 4,299,669, Cl. 204-1.00T.
Obata, Hirozo: *See*—
Kato, Masashi; Obata, Hirozo; Hirata, Minoru; Matsukuma, Hitoshi; Ishikawa, Kunio; and Tanaka, Junichi, 4,299,108, Cl. 72-178.000.
Oberdeck, Martin K.; and Koza, John R., to Koza, John R. Method of making a game ticket. 4,299,637, Cl. 156-64.000.
Oberle, Edmond, to Kuhn S.A. Power harrow with vertical rotating rotors. 4,299,291, Cl. 172-49.500.
O'Brien, John T.: *See*—
Goff, Donald D.; and O'Brien, John T., 4,300,220, Cl. 367-188.000.
Occidental Research Corporation: *See*—
DiGiacomo, Peter M.; and Dines, Martin B., 4,299,943, Cl. 528-9.000.
Oce-Andeno B.V.: *See*—
Hendrickx, Andreas J. J., 4,300,001, Cl. 568-767.000.
Ochi, Hideo; Shibata, Yumi; and Nagasawa, Kohtaro, to Somar Manufacturing Co., Ltd. High energy radiation curable resist material and method of using the same. 4,299,911, Cl. 430-286.000.
Ochs, Charles S.; and Koontz, Carl E., to Anchor Hocking Corporation. Tamperproof bottle closure cap. 4,299,328, Cl. 215-252.000.
O'Connor, Stephen E.: *See*—
Brown, Roger C.; Brown, Rodney A.; and O'Connor, Stephen E., 4,299,832, Cl. 424-253.000.
Oda, Hajime; Moritani, Nakanobu; and Samejima, Toshihide, to Kabushiki Kaisha Seikosha. Electronic timepiece. 4,300,221, Cl. 368-22.000.
Oda, Yoshio; Morimoto, Takeshi; and Suzuki, Kohji, to Asahi Glass Company, Ltd. Gas diffusion electrode. 4,299,682, Cl. 204-265.000.
O'Dea, John J.: *See*—
McEnery, James O.; Morton, Frank W.; and O'Dea, John J., 4,299,298, Cl. 175-418.000.
Oder, Robin R.: *See*—
Tsai, Shirley C.; Graham, Richard H.; and Oder, Robin R., 4,299,285, Cl. 166-259.000.
Oetiker, Hans. Hose clamp. 4,299,012, Cl. 24-19.000.
Oetiker, Hans; Kummer, Emanuel; Rusterholz, Kurt; and Gamperle, Hermann, to Gebruder Buhler AG. Process and filter control system for the cyclic counter-scavenging of diaphragm-activated filter hoses. 4,299,597, Cl. 55-96.000.
Ogasawara, Hiroomi; and Ogasawara, Masaomi. Device for measuring the amount of rotation of a rotating object. 4,300,093, Cl. 324-61.00R.
Ogasawara, Masaomi: *See*—
Ogasawara, Hiroomi; and Ogasawara, Masaomi, 4,300,093, Cl. 324-61.00R.
Ogden, Dennis H., to British Industrial Plastics Limited. Resin foams. 4,299,925, Cl. 521-188.000.
Ogihara, Masato; Misawa, Toshihiko; and Sue, Takaji, to Ricoh Company, Ltd. Sheet feed apparatus. 4,299,380, Cl. 271-9.000.
Ogihara, Satoru; Ura, Mitsuru; and Suzuki, Yoshihiro, to Hitachi, Ltd. Multilayer circuit board. 4,299,873, Cl. 428-137.000.
Ogle, Peter C.: *See*—
Ferris, Donald L.; and Ogle, Peter C., 4,299,538, Cl. 416-134.00A.
Ogomori, Yuji: *See*—
Shibatani, Haruo; Ogomori, Yuji; Kameda, Takashi; and Yanagi, Yoshio, 4,300,002, Cl. 568-817.000.
Ohara, Shozo; and Sunami, Hisakazu, to Nikkiso Co., Ltd. Infusion solution injecting pump. 4,299,541, Cl. 417-12.000.
Ohguchi, Osamu: *See*—
Maruyama, Hiromi; Tokuno, Takashi; Shimizu, Masao; Ishikawa, Kohji; Narumi, Naoaki; and Ohguchi, Osamu, 4,300,234, Cl. 371-27.000.
Ohkura, Katsuhiro: *See*—
Hayama, Yasunobu; Tanouchi, Kuniaki; Abe, Mitsuhiro; and Ohkura, Katsuhiro, 4,299,104, Cl. 72-20.000.
Ohmori, Yasuji: *See*—
Soejima, Shigeru; and Ohmori, Yasuji, 4,299,886, Cl. 428-412.000.
Ohnaka, Makoto, to Shiroyama Kogyo Kabushiki Kaisha. Jointed manipulator. 4,299,533, Cl. 414-752.000.
Ohnuki, Akira: *See*—
Matsumoto, Hiromi; Kikuma, Toshio; Nakajima, Koe; and Ohnuki, Akira, 4,299,109, Cl. 72-241.000.
Ohonaka, Hiromu: *See*—
Yamane, Yoichi; Kamata, Tutomu; Ohonaka, Hiromu; and Takase, Mituo, 4,299,534, Cl. 415-9.000.
Ohta, Masafumi: *See*—
Hashimoto, Mitsuru; Sakai, Kiyoshi; Ohta, Masafumi; Kozima, Akio; Sasaki, Masaomi; and Tsutsui, Kyoji, 4,299,896, Cl. 430-58.000.
Ohta, Nanto: *See*—
Kawada, Shigeki; Fujioka, Yoshiki; Ohta, Naoto; and Takahasi, Yasuo, 4,300,079, Cl. 318-390.000.
Ohta, Yoshinori, to Nippon Electric Co., Ltd. Acoustooptic modulator. 4,299,449, Cl. 350-358.000.
Ohtsuka, Kunio, to Nissan Motor Company, Limited. Passage structure of lock-up torque converter using specially designed spacer. 4,299,315, Cl. 192-3.300.
Ohzeki, Jurou: *See*—
Kuribayashi, Isao; Ohzeki, Jurou; and Shimamura, Kiyoshi, 4,299,757, Cl. 260-42.180.
Okabayashi, Ikuo: *See*—
Miyoshi, Hajime; Okabayashi, Ikuo; and Asanagi, Etsuo, 4,299,516, Cl. 405-266.000.
Okabe, Michimasa; and Koyama, Shozi, to Hitachi, Ltd. Process for recovering nitrogen in low pressure type air separation apparatus. 4,299,607, Cl. 62-13.000.
Okajima, Kouichi: *See*—
Kurosu, Tomio; and Okajima, Kouichi, 4,299,469, Cl. 354-268.000.
Oldenkamp, Ralph J.; and Weekes, Frederic D., to Vendacopy, Inc. Magnetic stripe card author. 4,300,042, Cl. 235-449.000.
Olowinski, Edward J.; and John, Richard A., to Lord Corporation. Textile spindle mounting. 4,299,085, Cl. 57-130.000.
Oltmanns, Heinrich; and Granz, Axel, to Oltmanns, Heinrich. Box formed building panel of extruded plastic. 4,299,070, Cl. 52-309.110.
Olympia Werke AG: *See*—
van Raamsdonk, Cornelis, 4,300,145, Cl. 346-140.00R.
Olympus Optical Co., Ltd.: *See*—
Kubota, Tetsumaru, 4,299,230, Cl. 128-630.000.
Mizokami, Kazunori, 4,299,459, Cl. 354-23.00D.
Saitou, Sinichi; and Shimoda, Misao, 4,300,178, Cl. 360-121.000.
Omori, Fumihiro: *See*—
Tanimoto, Fumio; and Omori, Fumihiro, 4,299,863, Cl. 427-140.000.
Omura, Yoshiaki; Mori, Fumio; Fujita, Yoshiji; Nishida, Takashi; Hosogai, Takeo; Aihara, Sukeji; Tamai, Yoshin; Wada, Fumio; and Itoi, Kazuo, to Kuraray Co., Ltd. Novel pesticides and pesticidal compositions cyclopropanecarboxylates and pesticidal method. 4,299,839, Cl. 424-274.000.
Onifer, Geofrey P.: *See*—
Pingel, Ronald J.; Onifer, Geofrey P.; and Spencer, Thomas L., 4,299,952, Cl. 528-500.000.
Ono, Yuzo, to Nippon Electric Co., Ltd. Coherent beam scanner having a planar hologram illuminated by a convergent or divergent beam. 4,299,437, Cl. 350-3.710.
Onoda, Hiroshi: *See*—
Watanabe, Tomoyoshi; Nakai, Toshio; Kuzuya, Susumu; Onoda, Hiroshi; Asai, Akira; Iwase, Takayuki; and Nakamura, Kazuo, 4,299,503, Cl. 400-161.300.
Onodera, Tamio: *See*—
Yamasaki, Yasuo; Sakai, Tokuji; Onodera, Tamio; and Sumitani, Kiji, 4,300,014, Cl. 585-481.000.
Oota, Katsuhiko: *See*—
Sawada, Kiyoshi; Ozawa, Nobuo; Oota, Katsuhiko; Narahara, Takefumi; Nakagawa, Masahiro; Fujimori, Yoshinobu, deceased; and Fujimori, Tomoyoshi, heir, 4,299,524, Cl. 414-117.000.
Orion Industries, Inc.: *See*—
Aro, Ernesto, 4,299,102, Cl. 70-165.000.
Orion-yhtyma Oy: *See*—
Mustakallio, Kimmo K.; Pippuri, Aino K.; and Honkanen, Erkki J., 4,299,846, Cl. 424-331.000.
Ormord, Lawrence A.: *See*—
Katz, Leonhard; and Ormord, Lawrence A., 4,300,077, Cl. 318-812.000.
Ornato, Giorgio: *See*—
Giobbio, Vincenzo; Ornato, Giorgio; and Buracchi, Livio, 4,299,962, Cl. 544-408.000.
Ortho Pharmaceutical Corporation: *See*—
Patil, Deepak R.; and VanBuskirk, Glenn A., 4,299,501, Cl. 366-349.000.
Osawa Precision Industries, Ltd.: *See*—
Hasegawa, Iwao, 4,299,460, Cl. 354-25.000.
Osio, Concepcion: *See*—
Hof, Craig R.; Osio, Concepcion; and Ulin, Roy A., 4,299,727, Cl. 252-408.000.
Osipova, Inna S.: *See*—
Azbukin, Vladimir G.; Balandin, Jury F.; Gorynin, Igor V.; Gluskin, Lev Y.; Zvezdin, Jury I.; Ignatenko, Alexandr G.; Krasnov, Alexandr N.; Melekhov, Rostislav K.; Osipova, Inna S.; Pavlov, Valery N.; Khokhlov, Alexandr A.; Stepanov, Ivan A.; Anfimov, Alexandr F.; Ardentov, Vasily V.; Burmakin, Viktor M.; Ignatov, Viktor A.; Rokhlin, Eduard A.; and Zhitkov, Vladimir V., 4,299,623, Cl. 75-128.00R.
Osman, Maged A.; Scheffer, Terry J.; Revesz, Laszlo; and Markert, Jurgen, to BBC Brown, Boveri & Co., Ltd. Liquid crystal mixture. 4,299,720, Cl. 252-299.100.
Ostermann, Peter, to Hickey-Mitchell Company. Newspaper vendor. 4,299,335, Cl. 221-241.000.

Osterreichisches Forschungszentrum Seibersdorf GmbH: *See—*
Hizo, Jozsef; and Duftschmid, Klaus, 4,300,050, Cl. 250-374.000.
Ostmann, August, to Carl Still GmbH & Co. KG, Firma. Heating wall construction for horizontal chamber coke ovens. 4,299,666, Cl. 202-267.00R.
Ostrowski, John C.: *See—*
Coppa, Richard J.; Lim, James K.; Ostrowski, John C.; and Rodriguez, Marie T., 4,299,461, Cl. 354-27.000.
Otis Elevator Company: *See—*
Bittar, Joseph; and Deric, J. Mark, 4,299,309, Cl. 187-29.00R.
Shung, Wu S.; and Deric, J. Mark, 4,299,308, Cl. 187-29.00R.
Otis Engineering Corporation: *See—*
Long, Olen R.; and Langham, Ronald F., 4,299,281, Cl. 166-135.000.
Otsuka, Yasuhiro: *See—*
Shinohara, Hiroshi; Otsuka, Yasuhiro; Matsumoto, Shinichi; Furutani, Toshinobu; and Wakizaka, Hiroshi, 4,299,627, Cl. 75-206.000.
Outlaw, Benjamin T.: *See—*
Redmore, Derek; and Outlaw, Benjamin T., 4,299,982, Cl. 564-156.000.
Outram, John D., to Plessey Handel und Investments AG. Communications systems. 4,300,235, Cl. 375-1.000.
Oxy Dental Prod. Inc.: *See—*
Padden, Harvey F., 4,300,037, Cl. 219-497.000.
Oyamada, Takashi: *See—*
Yamashita, Koji; and Oyamada, Takashi, 4,299,344, Cl. 224-242.000.
Oyamada, Takeo: *See—*
Narisawa, Shizuo; and Oyamada, Takeo, 4,299,941, Cl. 526-273.000.
Ozawa, Nobuo: *See—*
Sawada, Kiyoshi; Ozawa, Nobuo; Oota, Katsuhiko; Narahara, Takefumi; Nakagawa, Masahiro; Fujimori, Yoshinobu, deceased; and Fujimori, Tomoyoshi, heir, 4,299,524, Cl. 414-117.000.
Paciorek, Raymond M., to Eaton Corporation. Automatic resetting anti 2-block crane warning system. 4,300,134, Cl. 340-685.000.
Padden, Harvey F., to Oxy Dental Prod. Inc. Electronic control system for a radiant furnace. 4,300,037, Cl. 219-497.000.
Pai, Damodar M.: *See—*
Stolka, Milan; Yanus, John F.; Pai, Damodar M.; Renfer, Dale S.; and Pearson, James M., 4,299,897, Cl. 430-59.000.
Pako Corporation: *See—*
Harvey, Ronald B.; and Freier, Jan T., 4,299,479, Cl. 355-38.000.
Palac, Kazimir: *See—*
Dougherty, Lawrence W.; and Palac, Kazimir, 4,300,071, Cl. 313-407.000.
Palitex Project Company GmbH: *See—*
Munker, Gert, 4,299,357, Cl. 242-18.0DD.
Palmer, Keith W.: *See—*
Ball, William J.; Palmer, Keith W.; and Stewart, David G., 4,299,732, Cl. 252-455.00R.
Palmisano, Edward A.: *See—*
Bayer, Eric W.; and Palmisano, Edward A., 4,300,110, Cl. 335-6.000.
Palosi, Eva: *See—*
Kisfaludy, Lajos; Szirtes, Tamas; Balaspiri, Lajos; Palosi, Eva; Szporny, Laszlo; and Sarkadi, Adam, 4,299,821, Cl. 424-177.000.
Panzer, Hans P.; Rothenberg, Alan S.; and Cotrufello, Paul F., to American Cyanamid Company. Homopolymers and copolymers of 2-alkenylimidazole or its 1,3-dialkyl-2-alkenylimidazolium salts. 4,299,939, Cl. 526-258.000.
Parascandola, Louis J.: *See—*
Baird, Norman F.; and Parascandola, Louis J., 4,300,068, Cl. 313-315.000.
Park, Jack H.: *See—*
Tyler, Timothy N.; and Park, Jack H., 4,299,711, Cl. 252-8.55D.
Park, Lawrence D., Jr.: *See—*
Kruka, Vitold R.; Berni, Albert J.; Park, Lawrence D., Jr.; and Cadena, Edward R., 4,300,218, Cl. 367-165.000.
Parker, James E., to ICL/Scientific. Transparent laboratory slide for examination of liquid specimens. 4,299,441, Cl. 350-95.000.
Parkinson, Allen: *See—*
Philip, Alexander S.; Parkinson, Allen; Foxton, Michael G.; Rees, Frederick H.; Howard, Graham; and Shuttleworth, Anthony E., 4,300,230, Cl. 370-63.000.
Parks, Kenneth L.; Clevenger, Kyle D.; and McDonald, Daniel P., to Agrico Chemical Company. Removal of magnesium and aluminum impurities from wet process phosphoric acid. 4,299,804, Cl. 423-321.00R.
Parlman, Robert M., to Phillips Petroleum Co. Alkyl aryl ether production. 4,299,996, Cl. 568-658.000.
Parmann, Gunnar, to Rieber & Son A/S. Production of socket ends in thermoplastic pipes. 4,299,412, Cl. 285-110.000.
Parnum, John D.; and Barber, Nigel T., to Newall Co., Ltd., The. Cam machine with acceleration control. 4,299,061, Cl. 51-101.00R.
Parsons, David; Taylor, Maurice; and Young, Alastair J., to Automotive Products Limited. Clutch brake mechanisms. 4,299,314, Cl. 192-12.00C.
Pascal, Jean-Pierre, to Institut de Recherche des Transports. Method of constructing models of rotary electrical machines to provide simultaneous similitude of electromagnetic, thermal and mechanical working conditions of the rotor. 4,300,078, Cl. 318-49.000.
Patco: *See—*
Dorman, Hugh H., 4,299,415, Cl. 285-281.000.
Patel, Raman: *See—*
Coran, Aubert Y.; and Patel, Raman, 4,299,931, Cl. 525-95.000.
Patil, Deepak R.; and VanBuskirk, Glenn A., to Ortho Pharmaceutical Corporation. Continuous process for the preparation of semisolid dispersions. 4,299,501, Cl. 366-349.000.
Paton, Neil E.; and Hall, James A., to Rockwell International Corporation. Titanium base alloy for superplastic forming. 4,299,626, Cl. 75-175.500.
Paulson, Jerome I., to Allied Industries. Separator. 4,299,693, Cl. 209-3.000.
Pauly, Ronald R.; Good, Thomas W.; and Hastings, John D., to Tonka Corporation. Mountable wheel for toy vehicle. 4,299,051, Cl. 46-221.000.
Pavlov, Valery N.: *See—*
Azbukin, Vladimir G.; Balandin, Jury F.; Gorynin, Igor V.; Gluskin, Lev Y.; Zvezdin, Jury I.; Ignatenko, Alexandr G.; Krasnov, Alexandr N.; Melekhov, Rostislav K.; Osipova, Inna S.; Pavlov, Valery N.; Khokhlov, Alexandr A.; Stepanov, Ivan A.; Anfimov, Alexandr F.; Ardentov, Vasily V.; Burmakin, Viktor M.; Ignatov, Viktor A.; Rokhlin, Eduard A.; and Zhitkov, Vladimir V., 4,299,623, Cl. 75-128.00R.
Pawson, Beverly A.: *See—*
Chan, Ka-Kong; and Pawson, Beverly A., 4,299,995, Cl. 568-649.000.
Payen, Pierre, to L. Payen & Cie. Type of wrapped textile thread and process for its production which involves thermofusion to secure wrapping to core. 4,299,884, Cl. 428-377.000.
PCR, Incorporated: *See—*
De Pasquale, Ralph J.; and Schuman, Paul D., 4,299,961, Cl. 544-334.000.
PCUK Produits Chimiques Ugine Kuhlmann: *See—*
Dubreux, Bernard, 4,299,775, Cl. 260-464.000.
Peacock, Robert L. Durable lightweight horseshoe and accessories. 4,299,288, Cl. 168-23.000.
Pearce, Ronald: *See—*
Candlin, John P.; Wilson, Keith C.; and Pearce, Ronald, 4,299,936, Cl. 526-119.000.
Pearson, James M.: *See—*
Stolka, Milan; Yanus, John F.; Pai, Damodar M.; Renfer, Dale S.; and Pearson, James M., 4,299,897, Cl. 430-59.000.
Pechacek, Raymond E., to Hahn & Clay. Pressure vessel seal. 4,299,332, Cl. 220-378.000.
Peck, James O.: *See—*
Godfrey, Richard H.; and Peck, James O., 4,300,070, Cl. 313-403.000.
Pedain, Josef: *See—*
Berndt, Gerhard; Konig, Eberhard; Pedain, Josef; Thoma, Wilhelm; and Schroer, Walter, 4,299,868, Cl. 427-389.900.
Pelrine, Bruce P.; and Walsh, Dennis E., to Mobil Oil Corporation. Process for utilizing waste lubricating oils. 4,299,594, Cl. 44-50.000.
Peltzer & Ehlers: *See—*
Koch, Friedrich-Karl, 4,299,000, Cl. 10-86.00F.
Penberthy, H. Larry. Method and apparatus for converting hazardous material to a relatively harmless condition. 4,299,611, Cl. 65-27.000.
Pennwalt Corporation: *See—*
Chen, Mabel M. M.; and Sandler, Stanley R., 4,299,782, Cl. 260-932.000.
Pentel Kabushiki Kaisha: *See—*
Hashimoto, Junichi, 4,299,506, Cl. 401-72.000.
Perey, Arthur: *See—*
Myers, James E.; Kennedy, Tom E.; and Perey, Arthur, 4,299,099, Cl. 62-256.000.
Periasamy, Muthunadar P., to Mallinckrodt, Inc. Recovery of substituted pyrrole acetate. 4,299,770, Cl. 260-326.470.
Perie, Chantal: *See—*
Pigeon, Marcel; Szretter, Marta; and Perie, Chantal, 4,299,893, Cl. 430-8.000.
Pigeon, Marcel; Szretter, Marta; and Perie, Chantal, 4,299,905, Cl. 450-157.000.
Perkin-Elmer Corporation, The: *See—*
Harris, Murray T.; and Solheim, Curtis D., 4,300,173, Cl. 360-51.000.
Perkins, Charles V.: *See—*
Barlow, Derek; and Perkins, Charles V., 4,299,485, Cl. 356-307.000.
Permacel: *See—*
Doehnert, Donald F., 4,299,741, Cl. 260-17.4CL.
Perry, John L.: *See—*
Miguel, Anthony S.; Perry, John L.; and Wittman, Gary R., 4,299,872, Cl. 428-117.000.
Perry, Roy H.: *See—*
Collins, Basil C.; Bartholomew, Michael; and Perry, Roy H., 4,299,031, Cl. 33-18.00R.
PerSci, Inc.: *See—*
Harman, Jefferson H.; and Stevens, G. Randall, 4,300,174, Cl. 360-78.000.
Peters, J. Hinrich. Biological receptacle. 4,299,920, Cl. 435-285.000.
Peters, Joseph L. Safety device for use with a cannula. 4,299,228, Cl. 128-348.000.
Petersen, Harro: *See—*
Simenc, Toni; and Petersen, Harro, 4,299,592, Cl. 8-496.000.
Peterson, Alan K.: *See—*
Remedi, James J.; and Peterson, Alan K., 4,300,065, Cl. 307-571.000.
Petke, Frederick D.; and McConnell, Richard L., to Eastman Kodak Company. Hot melt adhesive composition. 4,299,934, Cl. 523-173.000.

Petro, Jozsef: *See—*
Tungler, Antal; Mathe, Tibor; Petro, Jozsef; and Bende, Zoltan, 4,299,992, Cl. 568-587.000.
Petrolite Corporation: *See—*
Redmore, Derek; and Outlaw, Benjamin T., 4,299,982, Cl. 564-156.000.
Petry, Wolfgang: *See—*
Koehler, Michael; and Petry, Wolfgang, 4,299,628, Cl. 75-230.000.
Pettijohn, Richard R.; Leung, Charles; Manning, Ronald G.; Reyes, Zoila; and Thackray, Malcolm, to SRI International. Photographic image enhancement method employing photoluminescence. 4,299,904, Cl. 430-139.000.
Pettit, John E. Window boot for truck-camper combinations and the like. 4,299,422, Cl. 296-166.000.
Petzold, Manfred: *See—*
Asbeck, Adolf; Eckelt, Michael; Erwied, Werner; Heyden, Rudi; and Petzold, Manfred, 4,299,975, Cl. 560-151.000.
Pfanstiel, Erich. Massage arrangement. 4,299,207, Cl. 128-56.000.
Pfeifer, Willi: *See—*
Igel, Wolfgang; Freibichler, Franz; Fehr, Werner; and Pfeifer, Willi, 4,299,083, Cl. 57-18.000.
Pfizer Inc.: *See—*
Barnish, Ian T.; Cross, Peter E.; and Danilewicz, John C., 4,299,820, Cl. 424-177.000.
Pflaum, Peter: *See—*
Luhleich, Hartmut; Pflaum, Peter; Dias, Francisco J.; Nauomidis, Aristides; Schirbach, Arno; and Nickel, Hubertus, 4,299,881, Cl. 428-308.000.
Pharmindustrie: *See—*
Champseix, Alain A.; Gueremy, Claude G. A.; and Le Fur, Gerard R., 4,299,835, Cl. 424-258.000.
Phelps, Richard E. Clamping device. 4,299,146, Cl. 81-420.000.
Philip, Alexander S.; Parkinson, Allen; Foxton, Michael G.; Rees, Frederick H.; Howard, Graham; and Shuttleworth, Anthony E., to Plessey Company Limited, The; Post Office, The; Standard Telephones & Cables Limited; and General Electric Company Limited, The. Digital switching arrangements for stored program control telecommunications systems. 4,300,230, Cl. 370-63.000.
Philippossian, Georges; and Enslen, Marc, to Societe d'Assistance Technique Pour Produits Nestle S.A. 1-Isopropyl- and 1-isobutyl-3,7-dimethyl xanthine es medicaments. 4,299,833, Cl. 424-253.000.
Philips Petroleum Company: *See—*
Nelson, William T., 4,300,006, Cl. 585-10.000.
Phillips, Brinley M.: *See—*
Messenger, Edward; Mather, Douglas E.; and Phillips, Brinley M., 4,299,740, Cl. 252-545.000.
Phillips, Earl G.; and Insalaco, Robert W., to Stryker Corporation. Irrigation and suction handpiece. 4,299,221, Cl. 128-276.000.
Phillips Petroleum Co.: *See—*
Campbell, Robert W., 4,299,951, Cl. 528-491.000.
Cheng, Paul J., 4,299,797, Cl. 422-112.000.
Dziewulski, Ted; and Kay, Arthur H., 4,299,055, Cl. 47-66.000.
Goff, Donald D.; and O'Brien, John T., 4,300,220, Cl. 367-188.000.
McDaniel, Max P.; and Meister, John J., 4,299,731, Cl. 252-451.000.
Parlman, Robert M., 4,299,996, Cl. 568-658.000.
Small, William M., 4,299,276, Cl. 165-162.000.
Stapp, Paul R., 4,299,998, Cl. 568-697.000.
Photographic Silver Recovery Limited: *See—*
Skinner, John H.; and Bentley, James S., 4,299,676, Cl. 204-109.000.
Piccardi, Paolo; Confalonieri, Giovanni; Da Col, Lino; and Ramella, Pier O., to Montedison S.p.A. Anthelmintic benzimidazole-carbamates. 4,299,837, Cl. 424-273.00B.
Pickart, Don E.; Reed, Philip W.; and Vranka, Joseph S., to International Business Machines Corporation. Method for forming in situ magnetic media in the form of discrete particles and article. 4,299,888, Cl. 428-457.000.
Piel, Frank: *See—*
Karmann, Werner; Weidehaas, Gerd; Howe, Bernd; and Piel, Frank, 4,299,231, Cl. 128-639.000.
Piepho, Roy L. License door holder assembly. 4,299,420, Cl. 296-1.00C.
Pierce, Percy E.; and Schimmel, Karl F., to PPG Industries, Inc. Sulfonate-containing polymer. 4,299,743, Cl. 260-22.00T.
Pierrel S.p.A.: *See—*
Giobbio, Vincenzo; Ornato, Giorgio; and Buracchi, Livio, 4,299,962, Cl. 544-408.000.
Piester, George. Hopper car cover system. 4,299,174, Cl. 105-377.000.
Piestert, Gerhard; and Gilch, Heinz G., to USM Corporation. Adhesive composition. 4,299,942, Cl. 526-323.100.
Pigeon, Marcel; Szretter, Marta; and Perie, Chantal, to Rhone-Poulenc Systemes. Photosensitive article for making visual aids with diazonium compounds and liquid epoxy resin. 4,299,893, Cl. 430-8.000.
Pigeon, Marcel; Szretter, Marta; and Perie, Chantal, to Rhone-Poulenc Systems. Water-developable film-forming diazonium compound containing photopolymerizable compositions and negative-working lithographic plates prepared therefrom. 4,299,905, Cl. 450-157.000.
Pigerol, Charles; Schaefer, Michel; and Nanthavong, Souli, to LABAZ. 1-Pyrrole- and 1-pyrrolidine-carboxylic acid derivatives and process for preparing the same. 4,299,768, Cl. 260-326.250.
Pilgram, Kurt H., to Shell Oil Company. N'Cyclopropyl-N-(fluorophenyl)-N-hydroxyureas. 4,299,778, Cl. 260-500.50H.
Pilkington Brothers Limited: *See—*
Bickerstaff, Kenneth; and Brewin, John D., 4,299,018, Cl. 29-129.000.
Piller, Robert S.: *See—*
Burkle, Stephen E.; Deutsch, Albert S.; and Piller, Robert S., 4,299,907, Cl. 430-175.000.
Pimentel, Gary W.; Poznick, Jeffrey B.; and Atwood, Robert W., to Mattel, Inc. Shape-simulating toy. 4,299,049, Cl. 46-8.000.
Pingel, Ronald J.; Onifer, Geofrey P.; and Spencer, Thomas L., to Dow Chemical Company, The. Method for recovering synthetic resinous latex solids. 4,299,952, Cl. 528-500.000.
Pinkasovich, Juliana, to General Electric Company. Switching devices for photoflash unit. 4,299,558, Cl. 431-359.000.
Piotrowski, Leo R., to Harris Corporation. Fabrication of complementary bipolar transistors and CMOS devices with poly gates. 4,299,024, Cl. 29-577.00C.
Pipe Systems, Incorporated: *See—*
Campbell, Steve, 4,299,274, Cl. 165-104.170.
Pipkin, David J.; and Schaefer, Donald W., to International Business Machines Corporation. Method and apparatus for applying a viscous fluid to a substrate. 4,299,186, Cl. 118-407.000.
Pippuri, Aino K.: *See—*
Mustakallio, Kimmo K.; Pippuri, Aino K.; and Honkanen, Erkki J., 4,299,846, Cl. 424-331.000.
Pisarevskij, Jurij V.: *See—*
Barta, Cestmir; Ctyroky, Jiri; Silvestrova, Iraida M.; and Pisarevskij, Jurij V., 4,299,448, Cl. 350-358.000.
Piso, John S.; and Roberge, James K., to Micro Sensors, Inc. Finish measuring method and apparatus. 4,300,094, Cl. 324-65.00R.
Pizzolato, Giacomo: *See—*
Confalone, Pasquale N.; Pizzolato, Giacomo; and Uskokovic, Milan R., 4,299,968, Cl. 549-68.000.
Plantation Patterns, Inc.: *See—*
Saiger, Herbert C., 4,299,423, Cl. 297-440.000.
Plessey Company Limited, The: *See—*
Philip, Alexander S.; Parkinson, Allen; Foxton, Michael G.; Rees, Frederick H.; Howard, Graham; and Shuttleworth, Anthony E., 4,300,230, Cl. 370-63.000.
Plessey Handel und Investments AG.: *See—*
Outram, John D., 4,300,235, Cl. 375-1.000.
Plummer, William T.: *See—*
Manning, Monis J.; and Plummer, William T., 4,299,468, Cl. 356-225.000.
Pobocik, Agnes: *See—*
Pobocik, Anthony B., deceased; Turner nee Pobocik, Marion, heir; Pobocik, Bernard, heir; Pobocik, Michael, heir; Pobocik, James, heir; Pobocik, Thomas, heir; Pobocik, Robert, heir; and Pobocik, Agnes, heir, 4,299,527, Cl. 414-462.000.
Pobocik, Agnes, heir: *See—*
Pobocik, Anthony B., deceased; Turner nee Pobocik, Marion, heir; Pobocik, Bernard, heir; Pobocik, Michael, heir; Pobocik, James, heir; Pobocik, Thomas, heir; Pobocik, Robert, heir; and Pobocik, Agnes, heir, 4,299,527, Cl. 414-462.000.
Pobocik, Anthony B., deceased; by Turner nee Pobocik, Marion, heir; by Pobocik, Bernard, heir; by Pobocik, Michael, heir; by Pobocik, James, heir; by Pobocik, Thomas, heir; by Pobocik, Robert, heir; and by Pobocik, Agnes, heir, to Pobocik, Agnes. Wheelchair loading and unloading device. 4,299,527, Cl. 414-462.000.
Pobocik, Bernard, heir: *See—*
Pobocik, Anthony B., deceased; Turner nee Pobocik, Marion, heir; Pobocik, Bernard, heir; Pobocik, Michael, heir; Pobocik, James, heir; Pobocik, Thomas, heir; Pobocik, Robert, heir; and Pobocik, Agnes, heir, 4,299,527, Cl. 414-462.000.
Pobocik, James, heir: *See—*
Pobocik, Anthony B., deceased; Turner nee Pobocik, Marion, heir; Pobocik, Bernard, heir; Pobocik, Michael, heir; Pobocik, James, heir; Pobocik, Thomas, heir; Pobocik, Robert, heir; and Pobocik, Agnes, heir, 4,299,527, Cl. 414-462.000.
Pobocik, Michael, heir: *See—*
Pobocik, Anthony B., deceased; Turner nee Pobocik, Marion, heir; Pobocik, Bernard, heir; Pobocik, Michael, heir; Pobocik, James, heir; Pobocik, Thomas, heir; Pobocik, Robert, heir; and Pobocik, Agnes, heir, 4,299,527, Cl. 414-462.000.
Pobocik, Robert, heir: *See—*
Pobocik, Anthony B., deceased; Turner nee Pobocik, Marion, heir; Pobocik, Bernard, heir; Pobocik, Michael, heir; Pobocik, James, heir; Pobocik, Thomas, heir; Pobocik, Robert, heir; and Pobocik, Agnes, heir, 4,299,527, Cl. 414-462.000.
Pobocik, Thomas, heir: *See—*
Pobocik, Anthony B., deceased; Turner nee Pobocik, Marion, heir; Pobocik, Bernard, heir; Pobocik, Michael, heir; Pobocik, James, heir; Pobocik, Thomas, heir; Pobocik, Robert, heir; and Pobocik, Agnes, heir, 4,299,527, Cl. 414-462.000.
Poirier, Victor L., to Thermo Electron Corporation. Incentive breathing exerciser. 4,299,236, Cl. 128-728.000.
Polaroid Corporation: *See—*
Alex, James J.; and Fichter, June C., 4,299,471, Cl. 354-304.000.
Coppa, Richard J.; Lim, James K.; Ostrowski, John C.; and Rodriguez, Marie T., 4,299,461, Cl. 354-27.000.
Manning, Monis J.; and Plummer, William T., 4,299,468, Cl. 356-225.000.
Poler, Stanley. Intraocular lens construction. 4,298,995, Cl. 3-13.000.
Polido, Rodolfo A. V.: *See—*
Chavez, Ramon G.; and Polido, Rodolfo A. V., 4,300,059, Cl. 307-261.000.
Polyakov, Anisim A.; Yarnykh, Vladimir S.; Smirnov, Anatoly M.; Simetsky, Mark A.; Kudryavtsev, Evgeny A.; Talanov, German A.; Zakomyrdin, Alexandr A.; Rudenko, Boris N.; Rakhmanin, Pavel P.; and Guschin, Vyacheslav N. Acaricidal preparation for diagnosis and control of ectoparasites of bees. 4,299,816, Cl. 424-45.000.

Polyakov, Sergei A.; and Shapiro, Aron L. Method for preparing C_3–C_4 olefins and vinylaromatic compounds. 4,300,007, Cl. 585-323.000.
Polychrome Corporation: *See*—
Burkle, Stephen E.; Deutsch, Albert S.; and Piller, Robert S., 4,299,907, Cl. 430-175.000.
Polyvend Inc.: *See*—
Weatherly, Douglas B., 4,299,334, Cl. 221-1.000.
Popoff, Michel; Brochon, Marie-Jose; and Brault, Georges, to Institut Pasteur. Method for multiple analyses. 4,299,918, Cl. 435-30.000.
Post Office, The: *See*—
Philip, Alexander S.; Parkinson, Allen; Foxton, Michael G.; Rees, Frederick H.; Howard, Graham; and Shuttleworth, Anthony E., 4,300,230, Cl. 370-63.000.
Potekhin, Valery F.: *See*—
Kovaleva, Irina D.; Tyschenko, Ljudmila A.; and Potekhin, Valery F., 4,298,993, Cl. 3-1.912.
Potter, James C.; and Sosnowski, Stanislaw J. A., to Lucas Industries Limited. Fuel injection pumping apparatus. 4,299,542, Cl. 417-214.000.
Potti, Gopalakrishnan: *See*—
Israel, Mervyn; and Potti, Gopalakrishnan, 4,299,822, Cl. 424-180.000.
Potts, John D.: *See*—
Kirsch, Francis W.; Barmby, David S.; and Potts, John D., 4,300,015, Cl. 585-722.000.
Poujois, Robert: *See*—
Barbier, Daniel; Ittel, Jean-Michel; and Poujois, Robert, 4,300,048, Cl. 250-338.000.
Powercube Corporation: *See*—
Baranowski, Conrad J.; and Bedell, Joel T., 4,300,191, Cl. 363-17.000.
Powers, Peter J.: *See*—
Cottrell, John S.; and Powers, Peter J., 4,299,716, Cl. 252-99.000.
Cottrell, John S.; and Powers, Peter J., 4,299,717, Cl. 252-99.000.
Poznick, Jeffrey B.: *See*—
Pimentel, Gary W.; Poznick, Jeffrey B.; and Atwood, Robert W., 4,299,049, Cl. 46-8.000.
PPG Industries, Inc.: *See*—
Birkmeyer, William J., 4,299,747, Cl. 260-29.6NR.
Korach, Malcolm, 4,299,674, Cl. 204-98.000.
Korach, Malcolm, 4,299,675, Cl. 204-98.000.
Pierce, Percy E.; and Schimmel, Karl F., 4,299,743, Cl. 260-22.00T.
Sensi, John E., 4,299,612, Cl. 65-99.00A.
Prada, Luis E., to General Electric Company. Refrigerator door switch. 4,300,025, Cl. 200-61.690.
Premerlani, William J., to General Electric Company. Commutation circuit for an HVDC circuit breaker. 4,300,181, Cl. 361-4.000.
Preston, William C.; and Still, Michael W., to E-Systems, Inc. Moving carriage buffer/feeder. 4,299,379, Cl. 271-3.100.
Previati, Augusto, to Industrie Pirelli, S.p.A. Clamp for flat platten presses. 4,299,552, Cl. 425-371.000.
Pricer, Wilbur D.: *See*—
Chakravarti, Satya N.; Heller, Lawrence G.; and Pricer, Wilbur D., 4,300,210, Cl. 365-45.000.
Princen, Henricus M.: *See*—
Esposito, Michael A.; and Princen, Henricus M., 4,299,739, Cl. 252-545.000.
Process Engineering Incorporated: *See*—
Girone, Joseph M., 4,299,199, Cl. 126-420.000.
Prock, David A., to Texaco Inc. Method for mooring a vessel to a pier or dock. 4,299,183, Cl. 114-230.000.
Procter & Gamble Company, The: *See*—
Luedders, Wilmer L., 4,299,826, Cl. 424-181.000.
Pruden, Barry B.: *See*—
Khulbe, Chandra P.; Ranganathan, Ramaswami; and Pruden, Barry B., 4,299,685, Cl. 208-48.0AA.
Pure Power Incorporated: *See*—
Mayo, Alfred M.; and Convers, Charles C., 4,299,202, Cl. 126-441.000.
Pusch, Gunter; and Hoffmann, Alexander, to U.S. Philips Corporation. Thermal imaging device for detecting and identifying a thermal object. 4,300,160, Cl. 358-113.000.
Pye Electronic Products Limited: *See*—
Barlow, Derek; and Perkins, Charles V., 4,299,485, Cl. 356-307.000.
Quade, Robert N., to General Atomic Company. Heat-extraction system for gas-cooled nuclear reactor. 4,299,660, Cl. 376-298.000.
Quadri Corporation: *See*—
Bruder, John P., 4,300,214, Cl. 365-196.000.
Quick-Rotan Becker & Notz KG: *See*—
Angersbach, Wolfgang; and Meier, Karl-Heinz, 4,300,082, Cl. 318-614.000.
Quinci, Emanuel R.: *See*—
Quinton, Brian M.; Quinci, Emanuel R.; and Harrison, Henry, deceased, 4,299,325, Cl. 209-553.000.
Quinton, Brian M.; Quinci, Emanuel R.; and Harrison, Henry, deceased (by Harrison, Dorothy, administratrix), to Halm Industries Co., Inc.; and De La Rue Giori S.A. Document detector and collector. 4,299,325, Cl. 209-553.000.
Raahauge, Jerald C., to Formulabs Industrial Inks, Incorporated. High speed conductor coding apparatus. 4,299,163, Cl. 101-36.000.
Raco, Inc.: *See*—
Datschefski, Arthur E., 4,299,363, Cl. 248-56.000.
Rademaker, Gerrit, to U. S. Philips Corporation. Electronic relay arrangement. 4,300,018, Cl. 178-70.00R.
Raghunathan, Kuppuswamy; and Smith, Philip S., to Motorola, Inc. CMOS Microprocessor architecture. 4,300,195, Cl. 364-200.000.
Ragletti, Christian: *See*—
Haenni, Eduard A.; and Ragletti, Christian, 4,299,149, Cl. 83-91.000.
Raisin, Jean-Pierre: *See*—
Helffer, Bernard; and Raisin, Jean-Pierre, 4,299,179, Cl. 112-121.120.
Rak, Stanley F.; DeVale, Donald P.; and Rehfeldt, Roger, to Culligan International Company. Circuit and apparatus for controlling a water softener. 4,299,698, Cl. 210-96.100.
Rakhmanin, Pavel P.: *See*—
Polyakov, Anisim A.; Yarnykh, Vladimir S.; Smirnov, Anatoly M.; Simetsky, Mark A.; Kudryavtsev, Evgeny A.; Talanov, German A.; Zakomyrdin, Alexandr A.; Rudenko, Boris N.; Rakhmanin, Pavel P.; and Guschin, Vyacheslav N., 4,299,816, Cl. 424-45.000.
Ramella, Pier G.: *See*—
Piccardi, Paolo; Confalonieri, Giovanni; Da Col, Lino; and Ramella, Pier G., 4,299,837, Cl. 424-273.00B.
Ramesohl, Hubert: *See*—
Herchenbach, Horst; Ramesohl, Hubert; and Brachthauser, Kunibert, 4,299,564, Cl. 432-106.000.
Ramsey Corporation: *See*—
McCormick, Harold E., 4,299,401, Cl. 277-216.000.
Ranco Incorporated: *See*—
Troyer, Terrence J., 4,299,373, Cl. 251-58.000.
Ranganathan, Ramaswami: *See*—
Khulbe, Chandra P.; Ranganathan, Ramaswami; and Pruden, Barry B., 4,299,685, Cl. 208-48.0AA.
Rasberger, Michael: *See*—
Rody, Jean; and Rasberger, Michael, 4,299,926, Cl. 525-55.000.
Rask, Eric H.; and Castonguay, Roger N., to General Electric Company. Circuit breaker motor operator variable drive coupling apparatus. 4,300,027, Cl. 200-153.00V.
Rasmussen, Glenn: *See*—
Huston, Larry; Morrison, Clifton H.; Rasmussen, Glenn; and Tsuchiya, Takuzo, 4,299,150, Cl. 83-110.000.
Rasmussen, Paul, to Colorlux a-s. Frame construction for a projecting illuminated sign box. 4,299,042, Cl. 40-571.000.
Rautio, Aaro: *See*—
Rautio, Matti; and Rautio, Aaro, 4,299,145, Cl. 81-57.290.
Rautio, Matti; and Rautio, Aaro. Ratchet wrench. 4,299,145, Cl. 81-57.290.
Raychem Pontoise S.A.: *See*—
Gozlan, Gilles R., 4,299,028, Cl. 29-828.000.
Raytheon Company: *See*—
Joyal, Arthur B., 4,300,219, Cl. 367-174.000.
RCA Corporation: *See*—
Avins, Jeremiah Y., 4,300,039, Cl. 235-92.0EV.
Barnette, William E.; and Fox, Edward C., 4,300,226, Cl. 369-45.000.
Bell, Alan E.; Bartolini, Robert A.; Bloom, Allen; and Burke, William J., 4,300,143, Cl. 346-135.100.
Bell, Alan E., 4,300,227, Cl. 369-84.000.
Datta, Pabitra, 4,299,736, Cl. 252-506.000.
Godfrey, Richard H.; and Peck, James O., 4,300,070, Cl. 313-403.000.
Hung, Ling K.; and Bloom, Allen, 4,299,910, Cl. 430-270.000.
Nolan, Richard A., 4,300,069, Cl. 313-403.000.
Schade, Otto H., Jr., 4,300,091, Cl. 323-315.000.
Rea, Jesse R.; and Davis, Allen, to Duracell International Inc. Solid state cell. 4,299,890, Cl. 429-124.000.
Reanal Finomvegyszergyar: *See*—
Tungler, Antal; Mathe, Tibor; Petro, Jozsef; and Bende, Zoltan, 4,299,992, Cl. 568-587.000.
Reboux, Jean; and Lamote, Jean-Pierre, to Tocco-Stel. Method for induction butt-welding metal parts, in particular parts of irregular cross-section. 4,300,031, Cl. 219-10.410.
Rebsch, Gary A. Exponential folded horn speaker enclosure. 4,299,304, Cl. 181-144.000.
Recenello, Angelo. Peripheral view blinders. 4,298,991, Cl. 2-13.000.
Redmore, Derek; and Outlaw, Benjamin T., to Petrolite Corporation. Quaternaries of hydroxyalkylaminoalkylamides. 4,299,982, Cl. 564-156.000.
Reed, Lehman T. Geothermal well head assembly. 4,299,395, Cl. 277-12.000.
Reed, Philip W.: *See*—
Pickart, Don E.; Reed, Philip W.; and Vranka, Joseph S., 4,299,888, Cl. 428-457.000.
Reedy, James D.: *See*—
Baskent, Feyyaz O.; and Reedy, James D., 4,299,923, Cl. 521-110.000.
Reekie, John: *See*—
Mills, Alfred L.; Reekie, John; and Williams, John A., 4,299,271, Cl. 165-47.000.
Rees, Frederick H.: *See*—
Philip, Alexander S.; Parkinson, Allen; Foxton, Michael G.; Rees, Frederick H.; Howard, Graham; and Shuttleworth, Anthony E., 4,300,230, Cl. 370-63.000.
Reese Enterprises, Inc.: *See*—
Gryskiewicz, Gregory A., 4,299,283, Cl. 166-231.000.
Reeve, Douglas W., to ERCO Industries Limited. Method of bleaching pulp with an aqueous solution of chlorine dioxide and chlorine followed by a chlorine solution. 4,299,653, Cl. 162-88.000.

Rehfeldt, Roger: *See*—
Rak, Stanley F.; DeVale, Donald P.; and Rehfeldt, Roger, 4,299,698, Cl. 210-96.100.
Reidies, Arno H.: *See*—
Mein, Peter G.; and Reidies, Arno H., 4,299,735, Cl. 252-465.000.
Reiffert, Jurgen: *See*—
Wehle, Volker; Rupilius, Wolfgang; Reiffert, Jurgen; and Rogall, Gabriele, 4,299,725, Cl. 252-389.00A.
Reinicke, Robert H., to Consolidated Controls Corporation. Permanent magnet boosted electromagnetic actuator. 4,299,252, Cl. 137-625.500.
Reinitz, Clayton W., to General Electric Company. Process for the recovery of 2,2-bis(4-hydroxyphenyl)propane. 4,300,000, Cl. 568-724.000.
Reinmoeller, Adolf, to Keiper Automobiltechnik GmbH & Co. KG. Adjustable seat particularly in motor vehicles. 4,299,316, Cl. 192-48.800.
Remedi, James J.; and Peterson, Alan K., to Motorola, Inc. Power on reset circuit. 4,300,065, Cl. 307-571.000.
Renegar, Charles G., to Empire Enterprises, Inc. Apparatus for striping pencils. 4,299,187, Cl. 118-411.000.
Renfer, Dale S.: *See*—
Stolka, Milan; Yanus, John F.; Pai, Damodar M.; Renfer, Dale S.; and Pearson, James M., 4,299,897, Cl. 430-59.000.
Rensselaer Polytechnic Institute: *See*—
Scarton, Henry A.; Kennedy, Warren C.; and McDonald, John F., 4,300,033, Cl. 219-70.000.
Renz, Dieter; Schobbe, Hermann; and Loper, Bernd, to Daimler-Benz Aktiengesellschaft. Central locking mechanism for web disk wheels. 4,299,425, Cl. 301-9.0CN.
Resch, David; and Nanus, Gregory, to Concorde Manufacturing Company. Apparatus for controlling a reeled chance based amusement device. 4,299,388, Cl. 273-143.00R.
Revesz, Laszlo: *See*—
Osman, Maged A.; Scheffer, Terry J.; Revesz, Laszlo; and Markert, Jurgen, 4,299,720, Cl. 252-299.100.
Rexford, Donald L.: *See*—
Rowen, William I.; Ekstrom, Thomas E.; and Rexford, Donald L., 4,299,088, Cl. 60-39.270.
Rexham Corporation: *See*—
Burton, Charles A., 4,299,151, Cl. 83-300.000.
Reyes, Zoila: *See*—
Pettijohn, Richard R.; Leung, Charles; Manning, Ronald G.; Reyes, Zoila; and Thackray, Malcolm, 4,299,904, Cl. 430-139.000.
Rheaume, Walter A., to Textile Products Incorporated. Bias cut, continuous fabric of ceramic or synthetic fibers. 4,299,878, Cl. 428-257.000.
Rhodes, Andrew. Litter box. 4,299,190, Cl. 119-1.000.
Rhodes, Melvin H., to Rockwell International Corporation. Self excited saturatable core magnetic field detection apparatus. 4,300,095, Cl. 324-255.000.
Rhone-Poulenc Agrochimie: *See*—
Savory, Brian; and Desmoras, Jacques, 4,299,617, Cl. 71-109.000.
Rhone-Poulenc Industries: *See*—
Balme, Maurice; and Locatelli, Jean-Louis, 4,299,946, Cl. 528-128.000.
Rhone-Poulenc Systemes: *See*—
Pigeon, Marcel; Szretter, Marta; and Perie, Chantal, 4,299,893, Cl. 430-8.000.
Rhone-Poulenc Systems: *See*—
Pigeon, Marcel; Szretter, Marta; and Perie, Chantal, 4,299,905, Cl. 430-157.000.
Rhone-Progil: *See*—
Chatelain, Jean, 4,299,935, Cl. 526-88.000.
Ribble, George W.: *See*—
Vann, Roy R.; Ribble, George W.; and George, Flint R., 4,299,287, Cl. 166-297.000.
Ricci, Mario, to Major Prodotti Dentari S.p.A. Manufacture of dentures. 4,299,573, Cl. 433-167.000.
Rich, Hubert A.: *See*—
Saffer, Gary M.; Rich, Hubert A.; Carman, David N.; and Fekete, Ferenc, 4,299,548, Cl. 425-173.000.
Richardson Company, The: *See*—
Mocas, Verlin A., 4,299,891, Cl. 429-179.000.
Richardson, Robert H. Method and apparatus for generating alternating magnetic fields to produce harmonic signals from a metallic strip. 4,300,183, Cl. 361-152.000.
Richter Gedeon Vegyeszeti Gyar Rt.: *See*—
Kisfaludy, Lajos; Szirtes, Tamas; Balaspiri, Lajos; Palosi, Eva; Szporny, Laszlo; and Sarkadi, Adam, 4,299,821, Cl. 424-177.000.
Mago nee Karacsony, Erzsebet; Toldy, Lajos; Borsy, Jozsef; Tardos, Laszlo; Kiraly, Ildiko; and Ronay, Andras, 4,299,836, Cl. 424-261.000.
Ricoh Co., Ltd.: *See*—
Hashimoto, Mitsuru; Sakai, Kiyoshi; Ohta, Masafumi; Kozima, Akio; Sasaki, Masaomi; and Tsutsui, Kyoji, 4,299,896, Cl. 430-58.000.
Isayama, Takuro; Yamazaki, Hiroshi; Komai, Hiromichi; and Sato, Tsutomu, 4,300,144, Cl. 346-140.00R.
Nagahara, Yasumori, 4,299,475, Cl. 355-8.000.
Ogihara, Masato; Misawa, Toshihiko; and Sue, Takaji, 4,299,380, Cl. 271-9.000.
Sato, Mituhiro, 4,300,169, Cl. 358-256.000.
Rideout, Janet L.; Krenitsky, Thomas A.; and Elion, Gertrude B., to Burroughs Wellcome Co. Pyrazolo pyrimidine riboside compounds, pharmaceutical compositions and method of use. 4,299,823, Cl. 424-180.000.
Rideout, Janet L.; Krenitsky, Thomas A.; and Elion, Gertrude B., to Burroughs Wellcome Co. Substituted pyrazolo pyrimidine riboside compounds, pharmaceutical compositions and method of use. 4,299,824, Cl. 424-180.000.
Rieber & Son A/S: *See*—
Parmann, Gunnar, 4,299,412, Cl. 285-110.000.
Riecke, Kurt: *See*—
Dahm, Manfred; Jabs, Gert; Koglin, Bernd; Schnoring, Hildegard; and Riecke, Kurt, 4,299,723, Cl. 252-316.000.
Rieter Deutschland GmbH: *See*—
Rothen, Hansjoerg; Rutschmann, Heinrich; and Rutz, Hans, 4,299,011, Cl. 19-106.00R.
Rinaldo, Daniel M.: *See*—
Kraft, Derald H.; and Rinaldo, Daniel M., 4,299,583, Cl. 474-110.000.
Ritter, Gerhard: *See*—
Gott, Hans; Furndorfler, Peter; Kogl, Fred; Ritter, Klaus; and Ritter, Gerhard, 4,299,523, Cl. 414-55.000.
Ritter, Klaus: *See*—
Gott, Hans; Furndorfler, Peter; Kogl, Fred; Ritter, Klaus; and Ritter, Gerhard, 4,299,523, Cl. 414-55.000.
Ritzinger, Klaus. Pressure measuring device. 4,299,129, Cl. 73-746.000.
Robbins, Carl A., to Halliburton Company. Stabilized radioactive logging method and apparatus. 4,300,043, Cl. 250-262.000.
Roberge, James K.: *See*—
Piso, John S.; and Roberge, James K., 4,300,094, Cl. 324-65.00R.
Robers, Klass H. J., to U.S. Philips Corporation. Field interpolation circuit. 4,300,162, Cl. 358-160.000.
Robert Bosch GmbH: *See*—
Knapp, Heinrich; Sauer, Rudolf; Romann, Peter; Hafner, Udo; Wilfert, Thomas; and Kammerer, Werner, 4,299,124, Cl. 73-204.000.
Marey, Mohamed, 4,300,166, Cl. 358-210.000.
Romann, Peter; and Hafner, Udo, 4,299,125, Cl. 73-204.000.
Simon, Helmut, 4,299,547, Cl. 418-15.000.
Sochor, Josef; Horstmann, Winfried; and Foerster, Hubert, 4,300,172, Cl. 360-33.000.
Roberts, Colin A.: *See*—
Robertson, Angus A. J.; France, Carey J.; and Roberts, Colin A., 4,299,010, Cl. 17-30.000.
Robertshaw Controls Company: *See*—
Cassarino, A. Victor, 4,299,095, Cl. 62-155.000.
Robertson, Angus A. J.; France, Carey J.; and Roberts, Colin A., to A. J. Park & Son. Animal pelting system. 4,299,010, Cl. 17-30.000.
Robinson, Glen P., Jr. Heat transfer system. 4,299,275, Cl. 165-104.140.
Robinson, John W.: *See*—
Dietrich, Ralph N.; Howell, Stephen L.; and Robinson, John W., 4,299,154, Cl. 84-1.030.
Robota, Stephen; McGregor, Alastair J. H.; and Trollope, Gregory A. R., to Hooker Chemicals & Plastics Corp. Recovery of HF and HCl from gaseous mixtures thereof. 4,299,606, Cl. 62-28.000.
Rockwell International Corporation: *See*—
Eden, Richard C., 4,300,064, Cl. 307-446.000.
Paton, Neil E.; and Hall, James A., 4,299,626, Cl. 75-175.500.
Rhodes, Melvin H., 4,300,095, Cl. 324-255.000.
Rodewald, Paul G.: *See*—
Haag, Werner O.; Rodewald, Paul G.; and Weisz, Paul B., 4,300,009, Cl. 585-408.000.
Rodriguez, Marie T.: *See*—
Coppa, Richard J.; Lim, James K.; Ostrowski, John C.; and Rodriguez, Marie T., 4,299,461, Cl. 354-27.000.
Rody, Jean; and Rasberger, Michael, to Ciba-Geigy Corporation. Polymeric light stabilizers for plastics. 4,299,926, Cl. 525-55.000.
Roebuck, Malcolm J., to Badge-A-Mint Ltd. Die-set combination for making pin-back badges. 4,299,019, Cl. 29-243.520.
Roedl, Peter: *See*—
Heuwieser, Erwin; Kammermaier, Johann; and Roedl, Peter, 4,299,126, Cl. 73-295.000.
Rogall, Gabriele: *See*—
Wehle, Volker; Rupilius, Wolfgang; Reiffert, Jurgen; and Rogall, Gabriele, 4,299,725, Cl. 252-389.00A.
Rogers, Roy E., to Hanlon, Donald V., a part interest. Method and apparatus for cutting can bodies. 4,299,147, Cl. 82-47.000.
Rohm and Haas Company: *See*—
Dupre, Jean; and Hann, William M., 4,299,710, Cl. 252-8.50A.
Emmons, William D.; and Nyi, Kayson, 4,299,761, Cl. 260-42.530.
Emmons, William D.; and Feely, Wayne E., 4,299,867, Cl. 427-377.000.
Rojey, Alexandre: *See*—
Cohen, Georges; and Rojey, Alexandre, 4,299,093, Cl. 62-101.000.
Rokhlin, Eduard A.: *See*—
Azbukin, Vladimir G.; Balandin, Jury F.; Gorynin, Igor V.; Gluskin, Lev Y.; Zvezdin, Jury I.; Ignatenko, Alexandr G.; Krasnov, Alexandr N.; Melekhov, Rostislav K.; Osipova, Inna S.; Pavlov, Valery N.; Khokhlov, Alexandr A.; Stepanov, Ivan A.; Anfimov, Alexandr F.; Ardentov, Vasily V.; Burmakin, Viktor M.; Ignatov, Viktor A.; Rokhlin, Eduard A.; and Zhitkov, Vladimir V., 4,299,623, Cl. 75-128.00R.
Rollmann, Louis D., to Mobil Oil Corporation. Selective production of aromatics. 4,300,011, Cl. 585-467.000.
Romann, Peter; and Hafner, Udo, to Robert Bosch GmbH. Air quantity metering apparatus. 4,299,125, Cl. 73-204.000.

Romann, Peter: *See—*

Knapp, Heinrich; Sauer, Rudolf; Romann, Peter; Hafner, Udo; Wilfert, Thomas; and Kammerer, Werner, 4,299,124, Cl. 73-204.000.

Romer, Horst, to VDO Adolf Schindling AG. Dimmable rear view mirror, particularly for automotive vehicles. 4,299,444, Cl. 350-278.000.

Romine, Donald J., to Bendix Autolite Corporation. Thin coat temperature compensated resistance oxide gas sensor. 4,299,859, Cl. 427-34.000.

Rommag P. Worwag & Co.: *See—*

Hug, Niklaus, 4,299,007, Cl. 15-339.000.

Ronay, Andras: *See—*

Mago nee Karacsony, Erzsebet; Toldy, Lajos; Borsy, Jozsef; Tardos, Laszlo; Kiraly, Ildiko; and Ronay, Andras, 4,299,836, Cl. 424-261.000.

Rookus, James. Sharpener for screens of circular blades. 4,299,063, Cl. 51-241.00S.

Ros, Pierre: *See—*

Faugeras, Pierre; Fremeaux, Pierre; Henry, Edouard; Malaterre, Roger; and Ros, Pierre, 4,299,798, Cl. 422-281.000.

Rosaen, Borje O.; and Fosdick, Dale P. Fluid filtering device. 4,299,696, Cl. 210-120.000.

Rosenkranz, Hans J.: *See—*

Keggenhoff, Berthold; and Rosenkranz, Hans J., 4,299,733, Cl. 260-23.0AR.

Rosentreter, Ulrich: *See—*

Skinner, Wilfred A.; Rosentreter, Ulrich; and Elward, Thomas E., 4,299,840, Cl. 424-274.000.

Ross, John A., to Du Pont de Nemours, E. I., and Company. Process for manufacturing stranded copper wire. 4,299,788, Cl. 264-85.000.

Rossier, Marc-Henri: *See—*

Lavanchy, Gerard A.; Mezger, Fritz; and Rossier, Marc-Henri, 4,299,268, Cl. 164-155.000.

Roth, Jacques; and Seiler, Paul. Method of making a sound-absorbent material, and material so made. 4,299,883, Cl. 428-332.000.

Rothen, Hansjoerg; Rutschmann, Heinrich; and Rutz, Hans, to Rieter Deutschland GmbH. Web take-off apparatus at the doffer of a card. 4,299,011, Cl. 19-106.00R.

Rothenberg, Alan S.: *See—*

Panzer, Hans P.; Rothenberg, Alan S.; and Cutrufello, Paul F., 4,299,939, Cl. 526-258.000.

Rougier, Jean-Paul, to Societe Bretonne de Fonderie et de Mecanique (S.B.F.M.). Device for removal of casting deadhead by hydraulic wedge. 4,299,347, Cl. 225-97.000.

Roussel Uclaf: *See—*

Clemence, Francois; Deraedt, Roger; Allais, Andre; and Le Martret, Odile, 4,299,831, Cl. 424-251.000.

Franck-Neumann, Michel; and Miesch, Michel, 4,299,973, Cl. 560-124.000.

Rovac Corporation, The: *See—*

Shank, Wayne C.; and Edwards, Thomas C., 4,299,097, Cl. 62-229.000.

Rowe, Albert: *See—*

Leibinger, George E.; and Rowe, Albert, 4,300,112, Cl. 336-180.000.

Rowen, William I.; Ekstrom, Thomas E.; and Rexford, Donald L., to General Electric Company. Cyclic load duty control for gas turbine. 4,299,088, Cl. 60-39.270.

Roy E. Roth Company: *See—*

Sieghartner, Leonard J.; and Barnhouse, Larry, 4,299,536, Cl. 415-198.200.

Roy, Richard H.; and Edwards, Douglas F., to J. B. Foote Foundry Co., The. Resilient mechanism for shifting gears. 4,299,134, Cl. 74-473.00R.

Rudenko, Boris N.: *See—*

Polyakov, Anisim A.; Yarnykh, Vladimir S.; Smirnov, Anatoly M.; Simetsky, Mark A.; Kudryavtsev, Evgeny A.; Talanov, German A.; Zakomyrdin, Alexandr A.; Rudenko, Boris N.; Rakhmanin, Pavel P.; and Guschin, Vyacheslav N., 4,299,816, Cl. 424-45.000.

Ruhrchemie AG: *See—*

Tummes, Hans; Cornils, Boy; and Noeske, Heinz, 4,299,990, Cl. 568-454.000.

Rupilius, Wolfgang: *See—*

Wehle, Volker; Rupilius, Wolfgang; Reiffert, Jurgen; and Rogall, Gabriele, 4,299,725, Cl. 252-389.00A.

Russell, Richard T. Method of treating blood during operative procedures. 4,299,705, Cl. 210-647.000.

Rusterholz, Kurt: *See—*

Oetiker, Hans; Kummer, Emanuel; Rusterholz, Kurt; and Gamperle, Hermann, 4,299,597, Cl. 55-96.000.

Rutschmann, Heinrich: *See—*

Rothen, Hansjoerg; Rutschmann, Heinrich; and Rutz, Hans, 4,299,011, Cl. 19-106.00R.

Rutz, Hans: *See—*

Rothen, Hansjoerg; Rutschmann, Heinrich; and Rutz, Hans, 4,299,011, Cl. 19-106.00R.

Rybka, F. James. Device for inhibiting the formation of fibrous capsular contractures in silicone breast implants and method. 4,298,997, Cl. 3-36.000.

Saab-Scania Aktiebolag: *See—*

Sjoqvist, Carl D. I., 4,299,138, Cl. 74-552.000.

SAB Industri A.B.: *See—*

Bengtsson, Nils K.; and Wikstrom, Bo B., 4,299,312, Cl. 188-165.000.

Sacks, Jack, to View Engineering, Inc. Adaptive video processor. 4,300,164, Cl. 358-163.000.

Sacrini, Egeo: *See—*

Conti, Dino; Minotti, Luigi; and Sacrini, Egeo, 4,299,718, Cl. 252-186.000.

Saffer, Gary M.; Rich, Hubert A.; Carman, David N.; and Fekete, Ferenc, to Mattel, Inc. Toy casting machine. 4,299,548, Cl. 425-173.000.

Sagae, Kyuta; Tanabe, Susumu; and Kamogawa, Hiroshi, to Terumo Corporation. Intravascular catheter. 4,299,217, Cl. 128-214.400.

Sagishima, Takayuki; and Kitani, Teruo, to Matsushita Electric Industrial Co., Ltd. PAL Demodulator having non-synchronized line switch. 4,300,155, Cl. 358-24.000.

Sahajpal, Ved K.; Delaere, Jacques; Kromolicki, Zigmunt K.; and Settels, Mattheus R., to Borg-Warner Chemicals, Inc. Encapsulated phosphites. 4,299,885, Cl. 428-403.000.

Saiger, Herbert C., to Plantation Patterns, Inc. Knockdown settee. 4,299,423, Cl. 297-440.000.

Saiki, Yukihiro: *See—*

Wada, Takanori; Sano, Hitoshi; Sato, Shigekatsu; Saiki, Yukihiro; Shimizu, Keisuke; Hirata, Masanori; Naka, Junichi; Takahashi, Takayoshi; Ishii, Toshiaki; and Kamiki, Toshikazu, 4,299,855, Cl. 426-512.000.

St. Louis University: *See—*

Jellinek, Max, 4,299,919, Cl. 435-283.000.

Saito, Shoichi. Tape recorder with adapter for reading a card. 4,300,173, Cl. 360-94.000.

Saito, Tadao: *See—*

Shiomi, Teiichi; Saito, Tadao; and Nagano, Riichiro, 4,299,754, Cl. 260-33.6UA.

Saitoh, Hiroshi: *See—*

Tanaka, Minoru; Itoh, Fumikazu; Saitoh, Hiroshi; Kobayashi, Takashi; Sasaki, Akiyoshi; and Akutsu, Norio, 4,299,023, Cl. 29-564.100.

Saitou, Sinichi; and Shimoda, Misao, to Olympus Optical Co., Ltd. Multichannel magnetic head. 4,300,178, Cl. 360-121.000.

Sakai, Kiyoshi: *See—*

Hashimoto, Mitsuru; Sakai, Kiyoshi; Ohta, Masafumi; Kozima, Akio; Sasaki, Masaomi; and Tsutsui, Kyoji, 4,299,896, Cl. 430-58.000.

Sakai, Tokuji: *See—*

Yamasaki, Yasuo; Sakai, Tokuji; Onodera, Tamio; and Sumitani, Kiji, 4,300,014, Cl. 585-481.000.

Sakai, Yasumasa: *See—*

Hashizume, Yoshio; Itoh, Masanori; Sakai, Yasumasa; and Kamita, Akiyosi, 4,299,748, Cl. 260-29.6RW.

Sakamaki, Hisashi: *See—*

Kawatsura, Yoshihiro; Shimizu, Katsuichi; and Sakamaki, Hisashi, 4,299,476, Cl. 355-14.00C.

Sakamoto, Eiichi: *See—*

Ito, Noboru; Sakamoto, Eiichi; Kawasaki, Mikio; and Uchida, Takashi, 4,299,908, Cl. 430-244.000.

Sakamoto, Takashi, to Dainippon Screen Seizo Kabushiki Kaisha. Picture outline tracing and recording machine. 4,300,170, Cl. 358-293.000.

Sakano, Hajime; Kodama, Mikio; Ito, Akitoshi; and Terada, Miyuki, to Sumitomo Naugatuck Co., Ltd. Thermoplastic resin composition excellent in dwelling thermal stability. 4,299,929, Cl. 525-67.000.

Sallot, Louis E.: *See—*

Bourlier, Claude P.; and Sallot, Louis E., 4,299,175, Cl. 109-19.000.

Salvatore, Amedeo: *See—*

De Filippis, Pietro; Salvatore, Amedeo; Trama, Luigi; and Notaro, Giuseppe, 4,299,026, Cl. 29-612.000.

Samanta, Mrinmay: *See—*

Macedo, Pedro B.; Samanta, Mrinmay; and Simmons, Joseph H., 4,299,608, Cl. 65-3.100.

Samejima, Toshihide: *See—*

Oda, Hajime; Moritani, Nakanobu; and Samejima, Toshihide, 4,300,221, Cl. 368-22.000.

Samsonite Corporation: *See—*

Null, Robert A., 4,299,313, Cl. 190-18.00A.

Sanchez, Ramiro: *See—*

Fannin, Loyd W.; Malpass, Dennis B.; and Sanchez, Ramiro, 4,299,781, Cl. 260-665.00R.

Sanden, Per-Olof: *See—*

Johansson, Ingvar H.; Sanden, Per-Olof; Holmgren, Pahr O. A.; and Johansson, Helle G., 4,299,074, Cl. 53-529.000.

Sanders Associates, Inc.: *See—*

Wurst, William C.; Mercer, William R.; and Brodeur, Lester R., 4,300,139, Cl. 343-103.000.

Sanders and Forster Limited: *See—*

Fairgrieve, James M., 4,299,065, Cl. 52-79.700.

Sanderson, Charles H. Magnetic water conditioner. 4,299,700, Cl. 210-222.000.

Sanderson, William O.; Sumner, Richard B.; and Kragh, Loren G., to Tower Systems Inc. Waste heat disposal process. 4,299,786, Cl. 261-128.000.

Sandler, Stanley R.: *See—*

Chen, Mabel M. M.; and Sandler, Stanley R., 4,299,782, Cl. 260-932.000.

Sandoz, Inc.: *See—*

Stahel, Franklin H., 4,299,994, Cl. 568-625.000.

Sankin Kogyo Kabushiki Kaisha: *See—*

Yogosawa, Fumio, 4,299,570, Cl. 433-62.000.

Sano, Hitoshi: *See—*

Wada, Takanori; Sano, Hitoshi; Sato, Shigekatsu; Saiki, Yukihiro; Shimizu, Keisuke; Hirata, Masanori; Naka, Junichi; Takahashi, Takayoshi; Ishii, Toshiaki; and Kamiki, Toshikazu, 4,299,855, Cl. 426-512.000.

Santy, James L. Universal splint. 4,299,210, Cl. 128-87.00R.

Sanyo Chemical Ind., Ltd.: *See—*

Nomura, Takao; Taguchi, Yoshio; Nagata, Kozaburo; and Isaka, Takuji, 4,299,924, Cl. 521-131.000.

Sarkadi, Adam: *See—*

Kisfaludy, Lajos; Szirtes, Tamas; Balaspiri, Lajos; Palosi, Eva; Szporny, Laszlo; and Sarkadi, Adam, 4,299,821, Cl. 424-177.000.

Sartorius GmbH: *See—*

Knothe, Erich; Blawert, Dieter; and Melcher, Franz-Josef, 4,299,299, Cl. 177-264.000.

Sasagawa, Takashi: *See—*

Aya, Toshihiko; Sasagawa, Takashi; and Kadoi, Sho, 4,299,945, Cl. 528-126.000.

Sasai, Koji: *See—*

Horii, Hirokazu; and Sasai, Koji, 4,300,117, Cl. 340-52.00D.

Sasaki, Akiyoshi: *See—*

Tanaka, Minoru; Itoh, Fumikazu; Saitoh, Hiroshi; Kobayashi, Takashi; Sasaki, Akiyoshi; and Akutsu, Norio, 4,299,023, Cl. 29-564.100.

Sasaki, Masaomi: *See—*

Hashimoto, Mitsuru; Sakai, Kiyoshi; Ohta, Masafumi; Kozima, Akio; Sasaki, Masaomi; and Tsutsui, Kyoji, 4,299,896, Cl. 430-58.000.

Sasaki, Mikio, to Shibuya Kogyo Company, Ltd. Cartoning machine. 4,299,590, Cl. 493-164.000.

Sasaki, Osamu: *See—*

Fujimatsu, Wataru; Usagawa, Yasushi; Sasaki, Osamu; and Matsuura, Katsumi, 4,299,914, Cl. 430-384.000.

Sasaki, Takehiko: *See—*

Maeda, Hidetoshi; and Sasaki, Takehiko, 4,300,204, Cl. 364-705.000.

Sato, Kazuyoshi: *See—*

Ando, Ryo; Araki, Shigeru; Hoshi, Hideaki; and Sato, Kazuyoshi, 4,299,610, Cl. 65-19.000.

Sato, Mituhiro, to Ricoh Company, Ltd. Facsimile operation method. 4,300,169, Cl. 358-256.000.

Sato, Shigekatsu: *See—*

Wada, Takanori; Sano, Hitoshi; Sato, Shigekatsu; Saiki, Yukihiro; Shimizu, Keisuke; Hirata, Masanori; Naka, Junichi; Takahashi, Takayoshi; Ishii, Toshiaki; and Kamiki, Toshikazu, 4,299,855, Cl. 426-512.000.

Sato, Takashi: *See—*

Kimira, Hiroshi; Abiko, Kenji; Sato, Takashi; Yoshii, Isamu; Watanabe, Sadao; and Takei, Yutaka, 4,299,622, Cl. 75-124.000.

Sato, Tsutomu: *See—*

Isayama, Takuro; Yamazaki, Hiroshi; Komai, Hiromichi; and Sato, Tsutomu, 4,300,144, Cl. 346-140.00R.

Sato, Yasuo: *See—*

Konishi, Kazuo; and Sato, Yasuo, 4,299,827, Cl. 424-216.000.

Sato, Yoichi: *See—*

Nishikawa, Masao; Toshimitsu, Yoshihiko; Aoyama, Toshihiko; Takaoka, Tokuro; Aoki, Takashi; and Sato, Yoichi, 4,299,302, Cl. 180-148.000.

Satzler, Ronald L.: *See—*

Becker, Danny J.; Satzler, Ronald L.; and Koch, Keith E., 4,299,396, Cl. 277-12.000.

Sauer, Hans; and Kloss, Wolfgang, to Varta Batterie Aktiengesellschaft. Manufacture of air oxygen electrodes. 4,299,646, Cl. 156-278.000.

Sauer, Rudolf: *See—*

Knapp, Heinrich; Sauer, Rudolf; Romann, Peter; Hafner, Udo; Wilfert, Thomas; and Kammerer, Werner, 4,299,124, Cl. 73-204.000.

Sauerbrunn, Robert D., to Du Pont de Nemours, E. I., and Company. Flashing reactor. 4,299,498, Cl. 366-76.000.

Savage, David S.: *See—*

Hewett, Colin L.; and Savage, David S., 4,299,984, Cl. 564-426.000.

Savory, Brian; and Desmoras, Jacques, to Rhone-Poulenc Agrochimie. Method and composition to increase the sugar content of sugar cane. 4,299,617, Cl. 71-109.000.

Sawada, Kiyoshi; Ozawa, Nobuo; Oota, Katsuhiko; Narahara, Takefumi; Nakagawa, Masahiro; Fujimori, Yoshinobu, deceased; and by Fujimori, Tomoyoshi, heir, to Toshiba Kikai Kabushiki Kaisha; and Nippon Kokan Kabushiki Kaisha. Devices for automatically supplying tobular workpieces. 4,299,524, Cl. 414-117.000.

Sawakata, Akira; Yamamuro, Hiroshi; and Kobayashi, Syouzou, to Tokyo Shibaura Denki Kabushiki Kaisha. Density meter. 4,299,495, Cl. 356-442.000.

Sbuelz, Anes: *See—*

Marchelli, Francesco; and Sbuelz, Anes, 4,300,100, Cl. 328-109.000.

Scarton, Henry A.; Kennedy, Warren C.; and McDonald, John F., to Rensselaer Polytechnic Institute. Reduced operating noise nozzle for electric arc cutting device. 4,300,033, Cl. 219-70.000.

Schade, Otto H., Jr., to RCA Corporation. Current regulating circuitry. 4,300,091, Cl. 323-315.000.

Schaefer, Donald W.: *See—*

Pipkin, David J.; and Schaefer, Donald W., 4,299,186, Cl. 118-407.000.

Schaefer, Michel: *See—*

Pigerol, Charles; Schaefer, Michel; and Nanthavong, Souli, 4,299,768, Cl. 260-326.250.

Schaefer, Robert J.; Ayers, Jack D.; and Tucker, Thomas R., to United States of America, Navy. Surface hardening by particle injection into laser melted surface. 4,299,860, Cl. 427-53.100.

Schaeff, Hans, to Karl Schaeff GmbH & Co. Vehicle with adjustable balance weight. 4,299,530, Cl. 414-719.000.

Schaffer, Guenther: *See—*

Kerscher, Franz; and Schaffer, Guenther, 4,299,508, Cl. 403-172.000.

Schayes, Raymond G. G.: *See—*

Gustin, Pol A. G. J.; and Schayes, Raymond G. G., 4,300,146, Cl. 346-155.000.

Schechter, Berton: *See—*

Clingman, David L.; Cavanagh, John R.; Schechter, Berton; and Cross, Kenneth R., 4,299,865, Cl. 427-243.000.

Scheffer, Terry J.: *See—*

Osman, Maged A.; Scheffer, Terry J.; Revesz, Laszlo; and Markert, Jurgen, 4,299,720, Cl. 252-299.100.

Schering Aktiengesellschaft: *See—*

Ehrich, Hans-Jurgen; and Wahnelt, Jorg, 4,299,672, Cl. 204-43.00N.

Schering Corporation: *See—*

Loebenberg, David; and Gold, Elijah H., 4,299,845, Cl. 424-324.000.

Scheuermann, Fanny: *See—*

Meffert, Alfred; Scheuermann, Fanny; and Werdehausen, Achim, 4,299,737, Cl. 252-522.00R.

Schimmel, Karl F.: *See—*

Pierce, Percy E.; and Schimmel, Karl F., 4,299,743, Cl. 260-22.00T.

Schirbach, Arno: *See—*

Luhleich, Hartmut; Pflaum, Peter; Dias, Francisco J.; Nauomidis, Aristides; Schirbach, Arno; and Nickel, Hubertus, 4,299,881, Cl. 428-308.000.

Schlachet, Hugo, to Bessam Manufacturing, Inc. Apparatus for filtering, washing and cooling gases. 4,299,601, Cl. 55-230.000.

Schloemann-Siemag Akt.: *See—*

Marten, Hans-Friedrich, 4,299,103, Cl. 72-16.000.

Schlosberg, Richard H.: *See—*

Dougherty, Herbert W.; and Schlosberg, Richard H., 4,299,691, Cl. 208-263.000.

Schlumberger Technology Corporation: *See—*

Huchital, Gerald S.; and Gianzero, Stanley, 4,300,098, Cl. 324-338.000.

Schneider, Urban A.; Monley, Robert E.; Glatthorn, Raymond H.; and Nelson, Robert L., to Westinghouse Electric Corp. Gas tungsten arc welding torch. 4,300,034, Cl. 219-75.000.

Schnoring, Hildegard: *See—*

Dahm, Manfred; Jabs, Gert; Koglin, Bernd; Schnoring, Hildegard; and Riecke, Kurt, 4,299,723, Cl. 252-316.000.

Schobbe, Hermann: *See—*

Renz, Dieter; Schobbe, Hermann; and Loper, Bernd, 4,299,425, Cl. 301-9.0CN.

Schonfeld, Harald; Hack, Heinrich; and Arras, Ludwig, to Carl Schenck AG. Process and apparatus for the centering of bodies of rotation having uneven mass distribution along their shaft axis. 4,300,197, Cl. 364-508.000.

Schoorlemmer, Ben: *See—*

Kleyn, John G., 4,299,853, Cl. 426-271.000.

Schosek, William O. Underground pipe installing device. 4,299,375, Cl. 254-29.00R.

Schotte, Dietwald: *See—*

Milutzki, Udo; Schotte, Dietwald; and Johnson, Jeffrey, 4,300,228, Cl. 369-216.000.

Schregenberger, Alex J., to Midland-Ross Corporation. Oven with a mechanism for cascading heated gas successively through separate isolated chambers of the oven. 4,299,036, Cl. 34-16.000.

Schrodter, Klaus; Ehlers, Klaus-Peter; and Mulder, Roelof, to Hoechst Aktiengesellschaft. Production of alkali metal phosphate solutions free from zinc. 4,299,803, Cl. 423-308.000.

Schroeder, Dale W.: *See—*

McMillin, John V.; and Schroeder, Dale W., 4,300,123, Cl. 340-146.30Z.

Schroeder, Russell G., II: *See—*

Ward, Joseph W.; and Schroeder, Russell G., II, 4,299,477, Cl. 355-14.00R.

Schroer, Walter: *See—*

Berndt, Gerhard; Konig, Eberhard; Pedain, Josef; Thoma, Wilhelm; and Schroer, Walter, 4,299,868, Cl. 427-389.900.

Schuler, Werner. Gearing. 4,299,133, Cl. 74-415.000.

Schumacher, Ralf: *See—*

Struck, Carl-Heinz; and Schumacher, Ralf, 4,299,356, Cl. 239-558.000.

Schuman, Paul D.: *See—*

De Pasquale, Ralph J.; and Schuman, Paul D., 4,299,961, Cl. 544-334.000.

Schumann, Albert A. Permanent magnet motion conversion device. 4,300,067, Cl. 310-80.000.

Schurig, Helmuth: *See—*

Mose, Luciano; Schurig, Helmuth; and Strasser, Bernd, 4,299,681, Cl. 204-255.000.

Schwarz, Alois; Mautz, Karlheinz; and Stephan, Michael, to Messerschmitt-Boelkow-Blohm Gesellschaft mit beschraenkter Haftung. Four-blade rotor, especially for helicopters. 4,299,539, Cl. 416-138.000.

Schwarz, Richard A.: *See—*

Hergenrother, William L.; Schwarz, Richard A.; Ambrose, Richard J.; and Hayes, Robert A., 4,299,932, Cl. 525-130.000.

Schwarzkopf, Eugen, to Hotset Heizpatronen und Zubehor GmbH, Firma. Electric cartridge heater. 4,300,038, Cl. 219-544.000.
Schweitzer, Edmund O., III. Metering and protection system for an A.C. power system. 4,300,182, Cl. 361-79.000.
Schwuttke, Guenter H.: *See—*
Ciszek, Theodore F.; and Schwuttke, Guenter H., 4,299,648, Cl. 156-608.000.
Scott, Nathaniel. Oil level indicating and refilling device. 4,299,307, Cl. 184-103.00R.
Seale, James B.; and Gusse, Henry, to Edmonton Exchanger and Refinery Services Ltd. Carriage for supporting a tube bundle on a tube bundle puller. 4,299,531, Cl. 414-746.000.
Seelenbinder, Terry G.; and Hudson, Walter A., to AM International, Inc. Developer apparatus. 4,299,472, Cl. 354-318.000.
Segawa, Takashi, to Shimano Industrial Company Limited. Unit hub for bicycles. 4,299,318, Cl. 192-64.000.
Segretto, Bernard A.; and Burkacki, Roman J., to Sperry Rand Corporation. Shielded ribbon cable. 4,300,017, Cl. 174-36.000.
Seiki, Kazuo; Katoh, Takashi; and Yoshida, Yoshiaki, to Kabushiki Kaisha Toyoda Jidoshokki Seisakusho. Open end rotor for a spinning machine. 4,299,084, Cl. 57-58.890.
Seiler, Paul: *See—*
Roth, Jacques; and Seiler, Paul, 4,299,883, Cl. 428-332.000.
Seiller Pierre F. X. Hinge for hair clip, barrette or the like. 4,299,241, Cl. 132-48.00R.
Seitz, Max; Thumm, Hans P.; Hagen, Gunther; and Orad, Gerald, to Siemens Aktiengesellschaft. Method and apparatus for testing the clamp of a solderless electric connection. 4,299,131, Cl. 73-789.000.
Seki, Nobuichi: *See—*
Suzuki, Sadao; Ichizawa, Yoshiyuki; and Seki, Nobuichi, 4,299,549, Cl. 425-214.000.
Seki, Sigeru: *See—*
Suzuki, Hiroshi; Narasaki, Hideo; Seki, Sigeru; Endo, Kiichi; and Hirose, Takao, 4,299,738, Cl. 252-541.000.
Sekizawa, Hidekazu: *See—*
Minami, Masana; and Sekizawa, Hidekazu, 4,299,443, Cl. 350-162.0SF.
Sellers, Gregory J.; Durand, Kevin J.; and Bretts, Gerald R., to Allied Chemical Corporation. Amorphous spring-shield for tape cassette. 4,300,180, Cl. 360-130.330.
SEMED: *See—*
Aucouturier, Lucien, 4,299,445, Cl. 350-295.000.
Sengoku, Masayuki; Houkawa, Tadashi; Kuroishi, Tadafumi; and Komori, Ritsuo, to Hitachi, Ltd. Method of and device for analyzing one ingredient in a mixed solution with two light beams of different wavelengths. 4,299,487, Cl. 356-320.000.
Sensi, John E., to PPG Industries, Inc. Apparatus and method for attenuating float glass. 4,299,612, Cl. 65-99.00A.
Sensormatic Electronics Corporation: *See—*
Humble, David R., 4,299,870, Cl. 428-101.000.
Sester, Karl-Ekkehard: *See—*
Holl, Wolfgang; Sester, Karl-Ekkehard; Eberle, Siegfried H.; and Sontheimer, Heinrich, 4,299,922, Cl. 521-26.000.
Settels, Mattheus R.: *See—*
Sahajpal, Ved K.; Delaere, Jacques; Kromolicki, Zigmunt K.; and Settels, Mattheus R., 4,299,885, Cl. 428-403.000.
Shank, Wayne C.; and Edwards, Thomas C., to Rovac Corporation, The. Vane type compressor employing elliptical-circular profile. 4,299,097, Cl. 62-229.000.
Shanks, Bruce E., to General Electric Company. Sealed beam lamp unit having bonded terminals. 4,300,189, Cl. 362-267.000.
Shannon, E. Paul. Flexible hub magnetic gyro wheel. 4,299,127, Cl. 73-504.000.
Shapiro, Aron L.: *See—*
Polyakov, Sergei A.; and Shapiro, Aron L., 4,300,007, Cl. 585-323.000.
Sharp Kabushiki Kaisha: *See—*
Funada, Fumiaki; Takamatsu, Toshiaki; and Minezaki, Shigehiro, 4,299,450, Cl. 350-360.000.
Hayakawa, Masao; Maeda, Takamichi; and Kumura, Masao, 4,300,153, Cl. 357-80.000.
Konishi, Hideo; Matsuoka, Kazunori; and Gouya, Takao, 4,300,238, Cl. 455-161.000.
Maeda, Hidetoshi; and Sasaki, Takehiko, 4,300,204, Cl. 364-705.000.
Nakauchi, Hiroshi; Koyanagi, Katubumi; Kato, Hiroaki; Takafuji, Yutaka; Inami, Yasuhiko; and Uede, Hisashi, 4,300,138, Cl. 340-785.000.
Shell Oil Company: *See—*
Kruka, Vitold R.; Berni, Albert J.; Park, Lawrence D., Jr.; and Cadena, Edward R., 4,300,218, Cl. 367-165.000.
Pilgram, Kurt H., 4,299,778, Cl. 260-500.50H.
Tieman, Charles H.; and Soloway, Samuel B., 4,299,843, Cl. 424-304.000.
Shelton, William E. A., to Alan Shelton Limited. Yarn bobbin support apparatus. 4,299,359, Cl. 242-131.000.
Shen, Jian-Kuo: *See—*
Bradley, John J.; Miller, Robert C.; Miu, Ming T.; Shen, Jian-Kuo; and Staplin, Theodore R., Jr., 4,300,193, Cl. 364-200.000.
Bradley, John J.; Miu, Ming T.; and Shen, Jian-Kuo, 4,300,194, Cl. 364-200.000.
Sheridan, John J.; and Anderson, Willis H., to General Motors Corporation. Manually adjustable resistor device. 4,300,114, Cl. 338-172.000.
Shiba, Keisuke; Nakao, Sho; and Toyama, Tadao, to Fuji Photo Film Co., Ltd. Process for the production of printing plates. 4,299,912, Cl. 430-302.000.
Shibata, Yumi: *See—*
Ochi, Hideo; Shibata, Yumi; and Nagasawa, Kohtaro, 4,299,911, Cl. 430-286.000.
Shibatani, Haruo; Ogomori, Yuji; Kameda, Takashi; and Yanagi, Yoshio, to Mitsubishi Petrochemical Co., Ltd. Process for producing polycyclic diols. 4,300,002, Cl. 568-817.000.
Shibuya Kogyo Company, Ltd.: *See—*
Sasaki, Mikio, 4,299,590, Cl. 493-164.000.
Shibuya, Tsunenori, to Diesel Kiki Company, Ltd. Swash plate compressor. 4,299,543, Cl. 417-269.000.
Shigematsu, Koichi: *See—*
Niu, Tokihide; Yuuzu, Takayoshi; Abe, Ikuzo; and Shigematsu, Koichi, 4,300,032, Cl. 219-10.55B.
Shigeta, Yoshihiro: *See—*
Kawamura, Masaharu; and Shigeta, Yoshihiro, 4,299,463, Cl. 354-127.000.
Shim, Norm: *See—*
Knigge, Vincent L.; and Shim, Norm, 4,299,218, Cl. 128-214.00F.
Shimamura, Kiyoshi: *See—*
Kuribayashi, Isao; Ohzeki, Jurou; and Shimamura, Kiyoshi, 4,299,757, Cl. 260-42.180.
Shimano Industrial Company Limited: *See—*
Segawa, Takashi, 4,299,318, Cl. 192-64.000.
Shimizu, Katsuichi: *See—*
Kawatsura, Yoshihiro; Shimizu, Katsuichi; and Sakamaki, Hisashi, 4,299,476, Cl. 355-14.00C.
Shimizu, Keisuke: *See—*
Wada, Takanori; Sano, Hitoshi; Sato, Shigekatsu; Saiki, Yukihiro; Shimizu, Keisuke; Hirata, Masanori; Naka, Junichi; Takahashi, Takayoshi; Ishii, Toshiaki; and Kamiki, Toshikazu, 4,299,855, Cl. 426-512.000.
Shimizu, Masao: *See—*
Maruyama, Hiromi; Tokuno, Takashi; Shimizu, Masao; Ishikawa, Kohji; Narumi, Naoaki; and Ohguchi, Osamn, 4,300,234, Cl. 371-27.000.
Shimizu, Masayuki; Suzuki, Keiichi; and Inada, Kazutoshi, to Fuji Photo Film Co., Ltd. Method and apparatus for melting gel-like substances. 4,299,559, Cl. 432-13.000.
Shimizu, Seiichi, to Canon Kabushiki Kaisha. Interchangeable camera lens assembly. 4,299,470, Cl. 354-286.000.
Shimoda, Misao: *See—*
Saitou, Sinichi; and Shimoda, Misao, 4,300,178, Cl. 360-121.000.
Shinkai, Ichiro: *See—*
Liu, Thomas M. H.; Shinkai, Ichiro; and Sletzinger, Meyer, 4,299,974, Cl. 560-148.000.
Shinohara, Hiroshi; Otsuka, Yasuhiro; Matsumoto, Shinichi; Furutani, Toshinobu; and Wakizaka, Hiroshi, to Toyota Jidosha Kogyo Kabushiki Kaisha. Method of manufacturing oxygen sensing element. 4,299,627, Cl. 75-206.000.
Shinohara, Yoshiaki, to Kawasaki Steel Corporation. Heating furnace. 4,299,565, Cl. 432-194.000.
Shinya, Masuo: *See—*
Nishikawa, Eiichiro; Shinya, Masuo; Furukawa, Hiroshi; and Kaneko, Katsumi, 4,299,800, Cl. 423-219.000.
Shiomi, Teiichi; Saito, Tadao; and Nagano, Riichiro, to Mitsui Petrochemical Industries Ltd. Surface treating agent and method for its production. 4,299,754, Cl. 260-33.6UA.
Shirai, Kenji; and Takeuchi, Minoru, to Toyota Jidosha Kogyo Kabushiki Kaisha. Disc brake. 4,299,311, Cl. 188-70.00R.
Shirakawa, Tadashi: *See—*
Obana, Haruo; Shirakawa, Tadashi; Hikuma, Motohiko; Yasuda, Takeo; Karube, Isao; and Suzuki, Shuichi, 4,299,669, Cl. 204-1.00T.
Shiroyama Kogyo Kabushiki Kaisha: *See—*
Ohnaka, Makoto, 4,299,533, Cl. 414-752.000.
Shook, Norma G.: *See—*
Hakes, Gary A.; Shook, Norma G.; Cackley, George W.; Burdette, Stephen D.; and Morris, Hugh C., 4,299,300, Cl. 180-6.200.
Showa Denko Kabushiki Kaisha: *See—*
Nakayasu, Kazuo; Furuya, Osamu; and Hosaki, Yoshihiko, 4,299,978, Cl. 562-554.000.
Shuck, Elmer E.; and Stevenson, Howard R., Jr., to General Electric Company. Electrical attenuator. 4,300,108, Cl. 333-81.00R.
Shung, Wu S.; and Deric, J. Mark, to Otis Elevator Company. Position controlled elevator door motion. 4,299,308, Cl. 187-29.00R.
Shuttleworth, Anthony E.: *See—*
Philip, Alexander S.; Parkinson, Allen; Foxton, Michael G.; Rees, Frederick H.; Howard, Graham; and Shuttleworth, Anthony E., 4,300,230, Cl. 370-63.000.
Shvartsman, Vladimir A., to Flowers, Nancy; and Kennelly, Brian M., part interest to each. Multiple parallel input noise reduction system. 4,300,101, Cl. 330-149.000.
Sides, Jerry L.: *See—*
Harrison, Walter C.; and Sides, Jerry L., 4,299,709, Cl. 252-8.55D.
Sidney Farber Cancer Institute, Inc.: *See—*
Israel, Mervyn; and Potti, Gopalakrishnan, 4,299,822, Cl. 424-180.000.
Siebenhofer, Gottfried; Suessenbeck, Heinrich; and Zitz, Alfred, to Voest-Alpine Aktiengesellschaft. Mine roof supporting structure. 4,299,517, Cl. 405-296.000.
Sieghartner, Leonard J.; and Barnhouse, Larry, to Roy E. Roth Company. Multi-stage pumps. 4,299,536, Cl. 415-198.200.

Siemens Aktiengesellschaft: *See—*
Aulich, Hubert; Auracher, Franz; and Witte, Hans H., 4,299,609, Cl. 65-3.130.
Heuwieser, Erwin; Kammermaier, Johann; and Roedl, Peter, 4,299,126, Cl. 73-295.000.
Kerscher, Franz; and Schaffer, Guenther, 4,299,508, Cl. 403-172.000.
Seitz, Max; Thumm, Hans P.; Hagen, Gunther; and Grad, Gerald, 4,299,131, Cl. 73-789.000.
Siemens Medical Laboratories, Inc.: *See—*
Taumann, Leonhard, 4,300,055, Cl. 250-510.000.
Silver, Sol. Sequence forming and alignment game. 4,299,391, Cl. 273-271.000.
Silvermetz, David; and Adams, George L., to Envirotech Corporation. Method of testing the integrity of an ultrasonic system for sensing liquid-fluid interfaces. 4,299,114, Cl. 73-1.00H.
Silvestrova, Iraida M.: *See—*
Barta, Cestmir; Ctyroky, Jiri; Silvestrova, Iraida M.; and Pisarevskij, Jurij V., 4,299,448, Cl. 350-358.000.
Simenc, Toni; and Petersen, Harro, to BASF Aktiengesellschaft. Printing of textile materials. 4,299,592, Cl. 8-496.000.
Simetsky, Mark A.: *See—*
Polyakov, Anisim A.; Yarnykh, Vladimir S.; Smirnov, Anatoly M.; Simetsky, Mark A.; Kudryavtsev, Evgeny A.; Talanov, German A.; Zakomyrdin, Alexandr A.; Rudenko, Boris N.; Rakhmanin, Pavel P.; and Guschin, Vyacheslav N., 4,299,816, Cl. 424-45.000.
Simko, Richard T., to Xicor, Inc. Nonvolatile static random access memory devices. 4,300,212, Cl. 365-185.000.
Simmons, Joseph H.: *See—*
Macedo, Pedro B.; Samanta, Mrinmay; and Simmons, Joseph H., 4,299,608, Cl. 65-3.100.
Simon, Helmut, to Robert Bosch GmbH. Rotary fuel injection pump with two compression openings. 4,299,547, Cl. 418-15.000.
Simson, Anton K. Automobile steering mechanism. 4,299,407, Cl. 280-775.000.
Singer Company, The: *See—*
Ketterer, Stanley J., 4,299,181, Cl. 112-184.000.
Kron, Gerald J., 4,299,576, Cl. 434-59.000.
Singh, Shalendra K.: *See—*
Fontana, Robert E., Jr.; Bullock, David C.; Singh, Shalendra K.; and Bush, John M., 4,299,680, Cl. 204-192.00E.
Sisin Seiki Kabushiki Kaisha: *See—*
Yamanaka, Minoru, 4,299,374, Cl. 251-129.000.
Sivignon, Paul: *See—*
Giroux, Maurice; Sivignon, Paul; and Susini, Claude, 4,299,339, Cl. 222-153.000.
Sjoqvist, Carl D. I., to Saab-Scania Aktiebolag. Steering wheel for vehicles. 4,299,138, Cl. 74-552.000.
Skaugen, Borgeir, to Beloit Corporation. Foam generator for paper-making machine. 4,299,655, Cl. 162-343.000.
Skinner, Charles D. Mechanical router guide. 4,299,263, Cl. 144-144.50R.
Skinner, John H.; and Bentley, James S., to Photographic Silver Recovery Limited. Recovery of silver from photographic film. 4,299,676, Cl. 204-109.000.
Skinner, Wilfred A.; Rosentreter, Ulrich; and Elward, Thomas E., to SRI International. Method for repelling ticks and insects. 4,299,840, Cl. 424-274.000.
Skopek, Thomas R.: *See—*
Thilly, William G.; and Skopek, Thomas R., 4,299,915, Cl. 435-6.000.
Skopp, Alvin, to Exxon Research & Engineering Co. Tubular solar collector system. 4,299,203, Cl. 126-443.000.
Skorska, Malgorzata B.: *See—*
Skorski, Roman S.; Skorska, Maria B.; and Skorska, Malgorzata B., 4,299,620, Cl. 75-53.000.
Skorska, Maria B.: *See—*
Skorski, Roman S.; Skorska, Maria B.; and Skorska, Malgorzata B., 4,299,620, Cl. 75-53.000.
Skorski, Roman S.; Skorska, Maria B.; and Skorska, Malgorzata B., to University of Alabama, The. Lamellar graphite inoculant. 4,299,620, Cl. 75-53.000.
Skwirut, Henry; Young, Robert O.; and Morton, Edward W., to Westinghouse Electric Corp. Screw-in type lighting unit having a convoluted tridimensional fluorescent lamp. 4,300,073, Cl. 315-53.000.
Sletzinger, Meyer: *See—*
Liu, Thomas M. H.; Shinkai, Ichiro; and Sletzinger, Meyer, 4,299,974, Cl. 560-148.000.
Sloan-Kettering Institute for Cancer Research: *See—*
Eisinger, Magdalena G., 4,299,819, Cl. 424-95.000.
sma Shredder-Mull Aufbereitung Schrott Maschinen Abbruch GmbH: *See—*
Weiss, Karl, 4,299,376, Cl. 266-205.000.
Small, William M., to Phillips Petroleum Company. Heat exchanger having radial support. 4,299,276, Cl. 165-162.000.
Smart, Deane W., to Fletcher Wood Panels Limited. Cladding and method of making same. 4,299,877, Cl. 428-212.000.
Smirnov, Anatoly M.: *See—*
Polyakov, Anisim A.; Yarnykh, Vladimir S.; Smirnov, Anatoly M.; Simetsky, Mark A.; Kudryavtsev, Evgeny A.; Talanov, German A.; Zakomyrdin, Alexandr A.; Rudenko, Boris N.; Rakhmanin, Pavel P.; and Guschin, Vyacheslav N., 4,299,816, Cl. 424-45.000.
Smith, Dale A.: *See—*
Barton, Roy C.; and Smith, Dale A., 4,299,522, Cl. 414-24.500.
Smith, Dallas F.: *See—*
Lauer, Richard E.; and Smith, Dallas F., 4,299,025, Cl. 29-596.000.
Smith, Hugh H.: *See—*
Michel, David J.; and Smith, Hugh H., 4,299,625, Cl. 75-174.000.
Smith International, Inc.: *See—*
Geczy, Bela, 4,299,296, Cl. 175-65.000.
Smith, Jeffrey C., to Branson Ultrasonics Corporation. Vapor degreaser. 4,299,664, Cl. 202-170.000.
Smith, John W., to Dresser Industries, Inc. Battery changing apparatus. 4,299,526, Cl. 414-392.000.
Smith, Peter B., to Fram Europe Limited. Separation of a suspension of two immiscible fluids. 4,299,706, Cl. 210-649.000.
Smith, Philip S.: *See—*
Raghunathan, Kuppuswamy; and Smith, Philip S., 4,300,195, Cl. 364-200.000.
Smith, Richard E., to Xerox Corporation. Sheet feeding apparatus. 4,299,381, Cl. 271-96.000.
Smith, William V., to Cardinal Industries, Inc. Thermally insulated, fire resistant attic door. 4,299,059, Cl. 49-401.000.
SmithKline Corporation: *See—*
Huffman, William F.; and Yim, Nelson C., 4,299,969, Cl. 560-9.000.
Snow Brand Milk Products Co. Ltd.: *See—*
Wada, Takanori; Sano, Hitoshi; Sato, Shigekatsu; Saiki, Yukihiro; Shimizu, Keisuke; Hirata, Masanori; Naka, Junichi; Takahashi, Takayoshi; Ishii, Toshiaki; and Kamiki, Toshikazu, 4,299,855, Cl. 426-512.000.
Snow, Gary N., to Kennecott Corporation. Process for separating selenium and tellurium from each other. 4,299,810, Cl. 423-510.000.
Snyder, Solomon H. Assay kit and method. 4,299,813, Cl. 424-1.000.
Sobukawa, Hideo: *See—*
Fujitani, Yoshiyasu; Muraki, Hideaki; Kondoh, Shiroh; Tomita, Makoto; Yokota, Kouji; and Sobukawa, Hideo, 4,299,734, Cl. 252-462.000.
Sochor, Josef; Horstmann, Winfried; and Foerster, Hubert, to Robert Bosch GmbH. Playback system with amplitude correction for frequency modulated signals. 4,300,172, Cl. 360-33.000.
Societa Italiana Telecomunicazioni Siemens S.p.A.: *See—*
Busacca, Guido; and Muratore, Antonio, 4,300,105, Cl. 331-83.000.
Marchelli, Francesco; and Sbuelz, Anes, 4,300,100, Cl. 328-109.000.
Societe Anonyme Automobiles Citroen: *See—*
Dossin, Jacques, 4,299,418, Cl. 293-126.000.
Societe Bretonne de Fonderie et de Mecanique (S.B.F.M.): *See—*
Rougier, Jean-Paul, 4,299,347, Cl. 225-97.000.
Societe d'Assistance Technique Pour Produits Nestle S.A.: *See—*
Philippossian, Georges; and Enslen, Marc, 4,299,833, Cl. 424-253.000.
Societe de Moulage de Tournus: *See—*
Giroux, Maurice; Sivignon, Paul; and Susini, Claude, 4,299,339, Cl. 222-153.000.
Soejima, Shigeru; and Ohmori, Yasuji, to Daicel Chemical Industries, Ltd. Process for surface coating of molded polycarbonate resin product. 4,299,886, Cl. 428-412.000.
Sohn, Stephen W.: *See—*
Tu, Hosheng; and Sohn, Stephen W., 4,300,012, Cl. 585-470.000.
Solheim, Curtis D.: *See—*
Harris, Murray T.; and Solheim, Curtis D., 4,300,173, Cl. 360-51.000.
Solomon, Charles I. Eyeglass frame with support for temple connection. 4,299,456, Cl. 351-121.000.
Solomon, Elias E. Smoke detector. 4,300,133, Cl. 340-630.000.
Soloway, Samuel B.: *See—*
Tieman, Charles H.; and Soloway, Samuel B., 4,299,843, Cl. 424-304.000.
Soltan, Parviz; and Fletcher, Paul C., to United States of America, Navy. Liquid crystal fiber optics large screen display panel. 4,299,447, Cl. 350-334.000.
Soma, Ikuo; Magome, Tamotu; and Matsumoto, Toru, to Canon Kabushiki Kaisha. Image forming process and apparatus therefor. 4,299,902, Cl. 430-125.000.
Somar Manufacturing Co., Ltd.: *See—*
Ochi, Hideo; Shibata, Yumi; and Nagasawa, Kohtaro, 4,299,911, Cl. 430-286.000.
Sommer, August; and Brucker, Rainer, to Chemische Werke Huls Aktiengesellschaft. Process for the production of a catalyst for the hydration of olefins into alcohols. 4,299,730, Cl. 252-435.000.
Sontheimer, Heinrich: *See—*
Holl, Wolfgang; Sester, Karl-Ekkehard; Eberle, Siegfried H.; and Sontheimer, Heinrich, 4,299,922, Cl. 521-26.000.
Sony Corporation: *See—*
Kimira, Hiroshi; Abiko, Kenji; Sato, Takashi; Yoshii, Isamu; Watanabe, Sadao; and Takei, Yutaka, 4,299,622, Cl. 75-124.000.
Tachi, Katsuichi, 4,300,171, Cl. 360-10.000.
Soos, Rudolf: *See—*
Kovacs, Gabor; Szekely, Istvan; Lovasz nee Gaspar, Marianne; Soos, Rudolf; and Dukai, Joszef, 4,299,972, Cl. 560-124.000.
Sosnowski, Stanislaw J. A.: *See—*
Potter, James C.; and Sosnowski, Stanislaw J. A., 4,299,542, Cl. 417-214.000.
Southeastern Research Foundation, The: *See—*
Glassman, Jacob A., 4,299,225, Cl. 128-328.000.
Spaulding, Floyd A. Door closure. 4,299,058, Cl. 49-386.000.
Spencer, Donald L., to University of Iowa Research Foundation. Apparatus and method for collecting solar energy. 4,299,200, Cl. 126-434.000.
Spencer, Thomas L.: *See—*
Pingel, Ronald J.; Onifer, Geofrey P.; and Spencer, Thomas L., 4,299,952, Cl. 528-500.000.

Sperry Corporation: *See*—
Lee, Patrick S., 4,300,080, Cl. 318-563.000.
McMahon, Donald H., 4,300,122, Cl. 340-146.3MA.
Strenglein, Harry F., 4,300,092, Cl. 324-57.00R.
Sperry Rand Corporation: *See*—
Segretto, Bernard A.; and Burkacki, Roman J., 4,300,017, Cl. 174-36.000.
Spieth, Glen E.: *See*—
Fotheringham, Robert K.; and Spieth, Glen E., 4,300,130, Cl. 340-568.000.
Spin Physics, Inc.: *See*—
Meckel, Benjamin B., 4,299,678, Cl. 204-192.00M.
Spire Corporation: *See*—
Little, Roger G., 4,300,051, Cl. 250-445.00T.
Sproul, Nolte V., to Dyneer Corporation. Belt tensioner construction. 4,299,584, Cl. 474-135.000.
Spry, Douglas O., to Eli Lilly and Company. Cephalosporin vinyl halides. 4,299,954, Cl. 544-30.000.
SRI International: *See*—
Pettijohn, Richard R.; Leung, Charles; Manning, Ronald G.; Reyes, Zoila; and Thackray, Malcolm, 4,299,904, Cl. 430-139.000.
Skinner, Wilfred A.; Rosentreter, Ulrich; and Elward, Thomas E., 4,299,840, Cl. 424-274.000.
Stafsudd, Oscar M.: *See*—
Gentile, Anthony L.; Bowers, John L.; and Stafsudd, Oscar M., 4,299,649, Cl. 156-610.000.
Stahel, Franklin H., to Sandoz, Inc. Polyoxyalkylene condensation products. 4,299,994, Cl. 568-625.000.
Stahovec, Joseph L. Safety method and apparatus for sensing the presence of individuals adjacent a vehicle. 4,300,116, Cl. 340-32.000.
Stal-Laval Turbin AB: *See*—
Kullendorff, Anders; and Vahtra, Tonu, 4,299,087, Cl. 60-39.14M.
Stana, Regis R., to Wyoming Mineral Corporation. Process for the recovery of liquid extractant and acid from emulsions formed during metal recovery from acid solutions. 4,299,724, Cl. 252-348.000.
Standard Oil Company, The: *See*—
Dolhyj, Serge R.; and Velenyi, Louis J., 4,299,987, Cl. 568-321.000.
Velenyi, Louis J.; Uebele, Curtie E.; and Dolhyj, Serge R., 4,299,991, Cl. 568-573.000.
Standard Oil Company (Indiana): *See*—
Klotz, Marvin R., 4,299,808, Cl. 423-331.000.
Kuhlmann, George E.; and Bemis, Alan G., 4,299,977, Cl. 562-416.000.
McCaulay, David A., 4,300,008, Cl. 585-360.000.
Standard Telephones & Cables Limited: *See*—
Philip, Alexander S.; Parkinson, Allen; Foxton, Michael G.; Rees, Frederick H.; Howard, Graham; and Shuttleworth, Anthony E., 4,300,230, Cl. 370-63.000.
Standley, Paul M., to Dayco Corporation. Endless power transmission belt. 4,299,588, Cl. 474-264.000.
Stanley Works, The: *See*—
Ambler, E. Curtis, 4,299,152, Cl. 83-763.000.
Staplin, Theodore R., Jr.: *See*—
Bradley, John J.; Miller, Robert C.; Miu, Ming T.; Shen, Jian-Kuo; and Staplin, Theodore R., Jr., 4,300,193, Cl. 364-200.000.
Stapp, Paul R., to Phillips Petroleum Co. Preparation of ethers. 4,299,998, Cl. 568-697.000.
Stauber, Siegfried, to Wyler AG. Spirit level. 4,299,035, Cl. 33-386.000.
Staudt, Arnold P. Tree anchoring device. 4,299,052, Cl. 47-43.000.
Stauffer Chemical Company: *See*—
Hyzak, Daniel L., 4,299,616, Cl. 71-100.000.
Kuck, Mark A.; and Miller, Gary K., 4,299,806, Cl. 423-322.000.
Teach, Eugene G., 4,299,964, Cl. 548-146.000.
Tilles, Harry, 4,299,765, Cl. 260-239.0BF.
Wei, Chung H., 4,299,940, Cl. 526-278.000.
Stauffer, Nelson R.: *See*—
Berkholtz, Warren E., 4,299,642, Cl. 156-191.000.
Steele, Wallace A., to Lilly Company, The. Fire retardant printed wood paneling. 4,299,875, Cl. 428-151.000.
Stegmeier, William J. Edge-shaping tool for forming surface of wet concrete in regions abutting a joint. 4,299,513, Cl. 404-97.000.
Stein, Richard L.: *See*—
Bernard, Thomas E.; and Stein, Richard L., 4,299,216, Cl. 128-205.120.
Steinberg, Eric: *See*—
Gould, Geroge K.; and Steinberg, Eric, 4,300,040, Cl. 235-381.000.
Stepanov, Ivan A.: *See*—
Azbukin, Vladimir G.; Balandin, Jury F.; Gorynin, Igor V.; Gluskin, Lev Y.; Zvezdin, Jury I.; Ignatenko, Alexandr G.; Krasnov, Alexandr N.; Melekhov, Rostislav K.; Osipova, Inna S.; Pavlov, Valery N.; Khokhlov, Alexandr A.; Stepanov, Ivan A.; Anfimov, Alexandr P.; Ardentov, Vasily V.; Burmakin, Viktor M.; Ignatov, Viktor A.; Rokhlin, Eduard A.; and Zhitkov, Vladimir V., 4,299,623, Cl. 75-128.00R.
Stephan, Michael: *See*—
Schwarz, Alois; Mautz, Karlheinz; and Stephan, Michael, 4,299,539, Cl. 416-138.000.
Sterling Drug Inc.: *See*—
Gubitz, Franklyn W., 4,299,830, Cl. 424-250.000.
McCarthy, Francis L.; and Bach, Thomas H., 4,299,749, Cl. 260-29.60Z.
Stevens, G. Randall: *See*—
Harman, Jefferson H.; and Stevens, G. Randall, 4,300,174, Cl. 360-78.000.
Stevenson, Howard R., Jr.: *See*—
Shuck, Elmer E.; and Stevenson, Howard R., Jr., 4,300,108, Cl. 333-81.00R.
Stewart, David E., to American Hoechst Corporation. High impact polyamides. 4,299,744, Cl. 260-23.0AR.
Stewart, David G.: *See*—
Ball, William J.; Palmer, Keith W.; and Stewart, David G., 4,299,732, Cl. 252-455.00R.
Still, Michael W.: *See*—
Preston, William C.; and Still, Michael W., 4,299,379, Cl. 271-3.100.
Stimson, John J., Jr.: *See*—
Harris, Robert H.; Humphrey, Troy G.; and Stimson, John J., Jr., 4,299,081, Cl. 56-330.000.
Stobbe, Richard E.: *See*—
Cesarz, Michael R.; and Stobbe, Richard E., 4,300,086, Cl. 318-801.000.
Stock, Arthur J.; and Williams, Paul C., to Stock Equipment Company. Introduction of fluent materials into containers. 4,299,722, Cl. 252-628.000.
Stock Equipment Company: *See*—
Stock, Arthur J.; and Williams, Paul C., 4,299,722, Cl. 252-628.000.
Stokes, Keith J. Recovery of heat from flue gas. 4,299,561, Cl. 432-28.000.
Stolka, Milan; Yanus, John F.; Pai, Damodar M.; Renfer, Dale S.; and Pearson, James M., to Xerox Corporation. Aromatic amino charge transport layer in electrophotography. 4,299,897, Cl. 430-59.000.
Stork Brabant B.V.: *See*—
Jonkers, Thomas M., 4,299,164, Cl. 101-120.000.
Stotz, Erich: *See*—
Turi, Julius; and Stotz, Erich, 4,299,136, Cl. 74-478.500.
Stout, Robert L. Vane control bearing assembly. 4,299,546, Cl. 418-13.000.
Strasser, Bernd: *See*—
Mose, Luciano; Schurig, Helmuth; and Strasser, Bernd, 4,299,681, Cl. 204-255.000.
Streif oHG: *See*—
Meickl, Gerhard, 4,299,509, Cl. 403-252.000.
Strenglein, Harry F., to Sperry Corporation. Phase match measuring system. 4,300,092, Cl. 324-57.00R.
Stromblad, Gunnar, to Carl Zeiss-Stiftung. Intermediate tube and elevating mechanism for a microscope. 4,299,439, Cl. 350-49.000.
Struck, Carl-Heinz; and Schumacher, Ralf, to Dr. C. Otto & Comp. G.m.b.H. Spray nozzle for coke oven gas-collecting system. 4,299,356, Cl. 239-558.000.
Stryker Corporation: *See*—
Phillips, Earl O.; and Insalaco, Robert W., 4,299,221, Cl. 128-276.000.
Studer, Lewis O., to Melero Development. Caulking gun with flow stopper. 4,299,336, Cl. 222-80.000.
Sturm, Steven P., to AccuRay Corporation. Dynamically standardized radiant energy method and apparatus for plural channel gain independent material property measurement. 4,300,049, Cl. 250-339.000.
Stutzle, Dietmar: *See*—
Weidner, Peter; and Stutzle, Dietmar, 4,299,169, Cl. 102-210.000.
Sublett, Bobby J.: *See*—
McConnell, Richard L.; Trotter, Jimmy R.; and Sublett, Bobby J., 4,299,933, Cl. 525-170.000.
Sue, Takaji: *See*—
Ogihara, Masato; Misawa, Toshihiko; and Sue, Takaji, 4,299,380, Cl. 271-9.000.
Suessenbeck, Heinrich: *See*—
Siebenhofer, Gottfried; Suessenbeck, Heinrich; and Zitz, Alfred, 4,299,517, Cl. 405-296.000.
Sugihara, Hirosada: *See*—
Nohara, Akira; Sugihara, Hirosada; and Ukawa, Kiyoshi, 4,299,963, Cl. 546-89.000.
Sugimoto, Hiroshi; Karasawa, Shinji; Noshi, Kisuke; Ishii, Teruaki; and Matsuzawa, Sigeki, to Matsushita Electric Industrial Co., Ltd. Lead storage battery plates and method of making the same. 4,299,259, Cl. 141-1.100.
Sugiura, Kensuke; Kagaya, Mineo; Aoki, Hiroyuki; and Takehara, Takeitiro, to Nippon Oil Company, Ltd.; and Nissan Motor Co., Ltd. Hydrocarbon based central system fluid composition. 4,299,714, Cl. 252-73.000.
Sulzer Brothers Ltd.: *See*—
Fischli, Heinz, 4,299,273, Cl. 165-78.000.
Sumitani, Kiji: *See*—
Yamasaki, Yasuo; Sakai, Tokuji; Onodera, Tamio; and Sumitani, Kiji, 4,300,014, Cl. 585-481.000.
Sumitomo Bakelite Company Limited: *See*—
Nanjo, Motoyuki; Watanabe, Tsutomu; Koshibe, Shigeru; and Azuma, Keiji, 4,299,947, Cl. 528-139.000.
Sumitomo Chemical Company, Limited: *See*—
Narisawa, Shizuo; and Oyamada, Takeo, 4,299,941, Cl. 526-273.000.
Takeshita, Akira; Yokoyama, Kaneo; and Hattori, Makoto, 4,299,771, Cl. 260-378.000.
Sumitomo Corporation: *See*—
Suzuki, Hiroshi; Narasaki, Hideo; Seki, Sigeru; Endo, Kiichi; and Hirose, Takao, 4,299,738, Cl. 252-541.000.
Sumitomo Kinzoku Kogyo Kabushiki Kaisha: *See*—
Hashio, Moriki; and Kimura, Tomohiko, 4,299,266, Cl. 164-491.000.
Sumitomo Naugatuck Co., Ltd.: *See*—
Sakano, Hajime; Kodama, Mikio; Ito, Akitoshi; and Terada, Miyuki, 4,299,929, Cl. 525-67.000.

Sumner, Richard B.: *See*—
Sanderson, William G.; Sumner, Richard B.; and Kragh, Loren G., 4,299,786, Cl. 261-128.000.
Sun Oil Company of Pennsylvania: *See*—
Kirsch, Francis W.; Barmby, David S.; and Potts, John D., 4,300,015, Cl. 585-722.000.
Sunami, Hisakazu: *See*—
Ohara, Shozo; and Sunami, Hisakazu, 4,299,541, Cl. 417-12.000.
Surman, James J., to Eaton Corporation. Tire pressure monitor. 4,300,120, Cl. 340-58.000.
Susini, Claude: *See*—
Giroux, Maurice; Sivignon, Paul; and Susini, Claude, 4,299,339, Cl. 222-153.000.
Suzuki, Hideo, to Fujitsu Limited. Method of producing Josephson elements of the tunneling junction type. 4,299,679, Cl. 204-192.0EC.
Suzuki, Hiroshi; Narasaki, Hideo; Seki, Sigeru; Endo, Kiichi; and Hirose, Takao, to Director-General of Agency of Industrial Science and Technology; Kureha Chemical Industry Co. Ltd.; and Sumitomo Corporation. Detergent composition. 4,299,738, Cl. 252-541.000.
Suzuki, Keiichi: *See*—
Shimizu, Masayuki; Suzuki, Keiichi; and Inada, Kazutoshi, 4,299,559, Cl. 432-13.000.
Suzuki, Kohji: *See*—
Oda, Yoshio; Morimoto, Takeshi; and Suzuki, Kohji, 4,299,682, Cl. 204-265.000.
Suzuki, Ryoichi; Matsumoto, Seiichi; Amikura, Takashi; Tsunekawa, Tokuichi; and Uchiyama, Takashi, to Canon Kabushiki Kaisha. View finder device having liquid crystal cell. 4,299,462, Cl. 354-53.000.
Suzuki, Sadao; Ichizawa, Yoshiyuki; and Seki, Nobuichi, to Yoshino Kogyosho Co., Ltd. Heating blow-molding machine. 4,299,549, Cl. 425-214.000.
Suzuki, Shuichi: *See*—
Obana, Haruo; Shirakawa, Tadashi; Hikuma, Motohiko; Yasuda, Takeo; Karube, Isao; and Suzuki, Shuichi, 4,299,669, Cl. 204-1.00T.
Suzuki, Yoshihiro: *See*—
Ogihara, Satoru; Ura, Mitsuru; and Suzuki, Yoshihiro, 4,299,873, Cl. 428-137.000.
Svoboda, Josef, to TMC Corporation. Ski binding part. 4,299,404, Cl. 280-634.000.
Swaroop, Nareshwar, to Continental Group, Inc., The. Hot runner manifold flow distributor plug. 4,299,553, Cl. 425-572.000.
Sweitzer, Robert R. Cuff for the relief of tennis elbow and the like. 4,299,214, Cl. 128-165.000.
Swiatosz, Edmund; and Lane, Bruce V., to United States of America, Navy. Deep fat fryer fire fighting simulator and method. 4,299,579, Cl. 434-226.000.
Swift, Harold E.: *See*—
Madgavkar, Ajay M.; Vogel, Roger F.; and Swift, Harold E., 4,299,086, Cl. 60-39.060.
SWS Silicones Corporation: *See*—
Martin, Eugene R., 4,299,879, Cl. 428-266.000.
Sykes, Alec: *See*—
Withers, John A.; Sykes, Alec; and Brogan, Stephen M., 4,299,405, Cl. 280-759.000.
Syva Company: *See*—
Litman, David J.; and Ullman, Edwin F., 4,299,916, Cl. 435-6.000.
Szekely, Istvan: *See*—
Kovacs, Gabor; Szekely, Istvan; Lovasz nee Gaspar, Marianne; Soos, Rudolf; and Dukai, Joszef, 4,299,972, Cl. 560-124.000.
Szente, Andre: *See*—
Fischli, Albert E.; and Szente, Andre, 4,299,767, Cl. 260-293.30D.
Szirtes, Tamas: *See*—
Kisfaludy, Lajos; Szirtes, Tamas; Balaspiri, Lajos; Palosi, Eva; Szporny, Laszlo; and Sarkadi, Adam, 4,299,821, Cl. 424-177.000.
Szporny, Laszlo: *See*—
Kisfaludy, Lajos; Szirtes, Tamas; Balaspiri, Lajos; Palosi, Eva; Szporny, Laszlo; and Sarkadi, Adam, 4,299,821, Cl. 424-177.000.
Szretter, Marta: *See*—
Pigeon, Marcel; Szretter, Marta; and Perie, Chantal, 4,299,893, Cl. 430-8.000.
Pigeon, Marcel; Szretter, Marta; and Perie, Chantal, 4,299,905, Cl. 430-157.000.
Tachi, Katsuichi, to Sony Corporation. Magnetic recording medium direction sensing. 4,300,171, Cl. 360-10.000.
Taguchi, Yoshio: *See*—
Nomura, Takao; Taguchi, Yoshio; Nagata, Kozaburo; and Isaka, Takuji, 4,299,924, Cl. 521-131.000.
Taisei Corporation: *See*—
Ito, Yasuro; Higuchi, Yoshiro; Mochida, Yutaka; Kemmochi, Sampei; Kaga, Hideharu; and Yamamoto, Yasuhiro, 4,299,633, Cl. 106-97.000.
Takada, Juichiro. Input motion coupling to a motion amplifier for use in passive seat belt restraint systems. 4,299,408, Cl. 280-804.000.
Takafuji, Yutaka: *See*—
Nakauchi, Hiroshi; Koyanagi, Katsumi; Kato, Hiroaki; Takafuji, Yutaka; Inami, Yasuhiko; and Uede, Hisashi, 4,300,138, Cl. 340-785.000.
Takagi, Akinobu: *See*—
Yamamoto, Ryuichi; Hirai, Yutaka; Takagi, Akinobu; and Tashima, Zyunzi, 4,299,766, Cl. 260-239.30R.
Takahashi, Minoru: *See*—
Mitsui, Sadao; Takahashi, Minoru; and Watanabe, Keiichi, 4,300,131, Cl. 340-618.000.
Takahashi, Takayoshi: *See*—
Wada, Takanori; Sano, Hitoshi; Sato, Shigekatsu; Saiki, Yukihiro; Shimizu, Keisuke; Hirata, Masanori; Naka, Junichi; Takahashi, Takayoshi; Ishii, Toshiaki; and Kamiki, Toshikazu, 4,299,855, Cl. 426-512.000.
Takahasi, Yasuo: *See*—
Kawada, Shigeki; Fujioka, Yoshiki; Ohta, Naoto; and Takahasi, Yasuo, 4,300,079, Cl. 318-390.000.
Takamatsu, Toshiaki: *See*—
Funada, Fumiaki; Takamatsu, Toshiaki; and Minezaki, Shigehiro, 4,299,450, Cl. 350-360.000.
Takaoka, Tokuro: *See*—
Nishikawa, Masao; Toshimitsu, Yoshihiko; Aoyama, Toshihiko; Takaoka, Tokuro; Aoki, Takashi; and Sato, Yoichi, 4,299,302, Cl. 180-148.000.
Takase, Mituo: *See*—
Yamane, Yoichi; Kamata, Tutomu; Ohonaka, Hiromu; and Takase, Mituo, 4,299,534, Cl. 415-9.000.
Takasu, Yoshio: *See*—
Mitsuhashi, Yasuo; Kiuchi, Masashi; Takasu, Yoshio; Fukumoto, Hiroshi; Hino, Takashi; and Uchiyama, Masaki, 4,299,900, Cl. 430-122.000.
Takaya, Takao: *See*—
Kamiya, Takashi; and Takaya, Takao, 4,299,829, Cl. 424-246.000.
Takeca Riken Kogyo Kabushiki Kaisha: *See*—
Maruyama, Hiromi; Tokuno, Takashi; Shimizu, Masao; Ishikawa, Kohji; Narumi, Naoaki; and Ohguchi, Osamu, 4,300,234, Cl. 371-27.000.
Takeda Chemical Industries, Ltd.: *See*—
Konishi, Kazuo; and Sato, Yasuo, 4,299,827, Cl. 424-216.000.
Nohara, Akira; Sugihara, Hirosada; and Ukawa, Kiyoshi, 4,299,963, Cl. 546-89.000.
Takeda, Keisou, to Toyota Jidosha Kogyo Kabushiki Kaisha. Secondary air control system in an internal combustion engine. 4,299,089, Cl. 60-290.000.
Takehara, Nobumitsu: *See*—
Isayama, Shogo; and Takehara, Nobumitsu, 4,299,188, Cl. 118-412.000.
Takehara, Takeitiro: *See*—
Sugiura, Kensuke; Kagaya, Mineo; Aoki, Hiroyuki; and Takehara, Takeitiro, 4,299,714, Cl. 252-73.000.
Takei, Yutaka: *See*—
Kimira, Hiroshi; Abiko, Kenji; Sato, Takashi; Yoshii, Isamu; Watanabe, Sadao; and Takei, Yutaka, 4,299,622, Cl. 75-124.000.
Takenoya, Hideaki: *See*—
Kume, Toshiaki; Kakinuma, Toshihide; Makabe, Hachiro; Watanabe, Kazuo; and Takenoya, Hideaki, 4,299,180, Cl. 112-158.00E.
Takeshita, Akira; Yokoyama, Kaneo; and Hattori, Makoto, to Sumitomo Chemical Company, Limited. Process for producing anthraquinone compounds. 4,299,771, Cl. 260-378.000.
Takeuchi, Hitoshi: *See*—
Kato, Masaru; Takeuchi, Hitoshi; and Horiuchi, Toshiaki, 4,299,889, Cl. 428-569.000.
Takeuchi, Minoru: *See*—
Shirai, Kenji; and Takeuchi, Minoru, 4,299,311, Cl. 188-70.00R.
Takeyama, Tetsu; Azuma, Kenkoku; Ikeda, Akira; Yamamoto, Toshie; and Katsurada, Shigeho, to Mitsubishi Denki Kabushiki Kaisha. Water producing apparatus. 4,299,599, Cl. 55-180.000.
Talafuse, Larry J., to FMC Corporation. Offshore loading system. 4,299,261, Cl. 141-387.000.
Talanov, German A.: *See*—
Polyakov, Anisim A.; Yarnykh, Vladimir S.; Smirnov, Anatoly M.; Simetsky, Mark A.; Kudryavtsev, Evgeny A.; Talanov, German A.; Zakomyrdin, Alexandr A.; Rudenko, Boris N.; Rakhmanin, Pavel P.; and Guschin, Vyacheslav N., 4,299,816, Cl. 424-45.000.
Tamai, Yoshin: *See*—
Omura, Yoshiaki; Mori, Fumio; Fujita, Yoshiji; Nishida, Takashi; Hosogai, Takeo; Aihara, Sukeji; Tamai, Yoshin; Wada, Fumio; and Itoi, Kazuo, 4,299,839, Cl. 424-274.000.
Tammen, Bobby J. Top dice roulette game. 4,299,392, Cl. 273-274.000.
Tanabe, Susumu: *See*—
Sagae, Kyuta; Tanabe, Susumu; and Kamogawa, Hiroshi, 4,299,217, Cl. 128-214.400.
Tanabe, Toshihiko: *See*—
Togawa, Fumio; Andoh, Haruo; and Tanabe, Toshihiko, 4,299,882, Cl. 428-329.000.
Tanaka, Asami. Support structure. 4,299,567, Cl. 432-253.000.
Tanaka, Junichi: *See*—
Kato, Masashi; Obata, Hirozo; Hirata, Minoru; Matsukuma, Hitoshi; Ishikawa, Kunio; and Tanaka, Junichi, 4,299,108, Cl. 72-178.000.
Tanaka, Kouichi; and Amazawa, Kiyoshi, to Nippon Electric Co.; and Clarion Co., Ltd. Automatic gain control circuit for a noise pulse canceller. 4,300,104, Cl. 330-280.000.
Tanaka, Minoru; Itoh, Fumikazu; Saitoh, Hiroshi; Kobayashi, Takashi; Sasaki, Akiyoshi; and Akutsu, Norio, to Hitachi, Ltd. Machine for winding and inserting coils. 4,299,023, Cl. 29-564.100.
Tanaka, Tatsundo: *See*—
Bairinji, Riyoichi; Kawabata, Tatsuo; and Tanaka, Tatsundo, 4,299,702, Cl. 210-433.200.
Tanaka, Toshio: *See*—
Todo, Kenji; Miyanaka, Mutoshi; and Tanaka, Toshio, 4,299,556, Cl. 431-29.000.
Tanaka, Yoshikazu, to Janome Sewing Machine Co., Ltd. Two-way operation system control device for sewing machines. 4,299,182, Cl. 112-277.000.
Tanida, Takeyoshi, to New Nippon Electric Co., Ltd. Turret type television tuner having an elastic and a rigid support disc. 4,300,109, Cl. 334-51.000.

Tanimoto, Fumio; and Omori, Fumihiro, to Nippon Denki Kagaku Co., Inc. Pretreatment of an epoxy resin substrate for electroless copper plating. 4,299,863, Cl. 427-140.000.
Tanimura, Nobuyoshi; Fukuta, Hiroshi; Nishimura, Kotaro; and Yasui, Tokumasa, to Hitachi, Ltd.; and Hitachi Ome Electronic Co., Ltd. Memory circuit with increased operating speed. 4,300,213, Cl. 365-190.000.
Tanouchi, Kuniaki: *See—*
Hayama, Yasunobu; Tanouchi, Kuniaki; Abe, Mitsuhiro; and Ohkura, Katsuhiro, 4,299,104, Cl. 72-20.000.
Tansuwan, Chusak, to ACF Industries, Inc. Automative engine simulating apparatus. 4,300,205, Cl. 364-578.000.
Tarantola, Luciano, to Industrie Pirelli S.p.A. Method and machinery for manufacturing metallic cords in layers. 4,299,082, Cl. 57-9.000.
Tardos, Laszlo: *See—*
Mago nee Karacsony, Erzsebet; Toldy, Lajos; Borsy, Jozsef; Tardos, Laszlo; Kiraly, Ildiko; and Ronay, Andras, 4,299,836, Cl. 424-261.000.
Tarnowski, Andrew A., to Image Graphics, Inc. System for accurately tracing with a charged particle beam on film. 4,300,147, Cl. 346-159.000.
Tashima, Zyunzi: *See—*
Yamamoto, Ryuichi; Hirai, Yutaka; Takagi, Akinobu; and Tashima, Zyunzi, 4,299,766, Cl. 260-239.30R.
Tashiro, Norio, to Tokyo Shibaura Denki Kabushiki Kaisha. Magnetron having an internal capacitor for suppressing leakage of high frequency. 4,300,072, Cl. 315-39.510.
Task, Harry L.; and Kuperman, Gilbert G., to United States of America, Air Force. Minimum resolvable contrast measurement device. 4,299,451, Cl. 350-407.000.
Task, Harry L., to United States of America, Air Force. Measurement of windscreen distortion using optical diffraction. 4,299,482, Cl. 356-124.000.
Taumann, Leonhard, to Siemens Medical Laboratories, Inc. Radiation filter. 4,300,055, Cl. 250-510.000.
Taylor, Maurice: *See—*
Parsons, David; Taylor, Maurice; and Young, Alastair J., 4,299,314, Cl. 192-12.00C.
TDK Electronics Co, Ltd.: *See—*
Mitsui, Sadao; Takahashi, Minoru; and Watanabe, Keiichi, 4,300,131, Cl. 340-618.000.
Teach, Eugene G., to Stauffer Chemical Company. 3-Perhaloalkylhydroxy-oxazolidines and thiazolidines herbicidal antidotes. 4,299,964, Cl. 548-146.000.
Techna, Inc.: *See—*
Turner, John E., 4,300,097, Cl. 324-329.000.
Teijin Petrochemical Industries Ltd.: *See—*
Yamasaki, Yasuo; Sakai, Tokuji; Onodera, Tamio; and Sumitani, Kiji, 4,300,014, Cl. 585-481.000.
Teikoku Kako Co., Ltd.: *See—*
Aoki, Motohisa; Kawakami, Isao; and Nishihara, Masami, 4,299,719, Cl. 252-188.000.
Teledyne Industries, Inc.: *See—*
Yoknis, Myron; and Waite, James B., 4,300,199, Cl. 364-557.000.
Teletype Corporation: *See—*
Heeren, Richard H., 4,300,084, Cl. 318-696.000.
Tellis, Cyril, to Union Carbide Corporation. Process for removing carbonyl sulfide from gaseous streams. 4,299,802, Cl. 423-244.000.
Terada, Miyuki: *See—*
Sakano, Hajime; Kodama, Mikio; Ito, Akitoshi; and Terada, Miyuki, 4,299,929, Cl. 525-67.000.
Terra Tek, Inc.: *See—*
Barker, Lynn M., 4,299,120, Cl. 73-87.000.
Terui, Yasuaki: *See—*
Wada, Takamichi; and Terui, Yasuaki, 4,300,163, Cl. 358-163.000.
Terumo Corporation: *See—*
Sagae, Kyuta; Tanabe, Susumu; and Kamogawa, Hiroshi, 4,299,217, Cl. 128-214.400.
Texaco Canada Inc.: *See—*
Allan, Brian W., 4,299,690, Cl. 208-188.000.
Texaco Inc.: *See—*
Alston, Robert B., 4,299,286, Cl. 166-274.000.
Brennan, Michael E., 4,299,956, Cl. 544-177.000.
Brennan, Michael E., 4,299,957, Cl. 544-177.000.
Brown, Alfred; Kudchadker, Mohan V.; Varnon, James E.; and Whittington, Lawrence E., 4,299,284, Cl. 166-245.000.
Harrison, Walter C.; and Sides, Jerry L., 4,299,709, Cl. 252-8.55D.
Knifton, John F.; and Moss, Philip H., 4,299,985, Cl. 564-467.000.
Prock, David A., 4,299,183, Cl. 114-230.000.
Tyler, Timothy N.; and Park, Jack H., 4,299,711, Cl. 252-8.55D.
Texas Alkyls, Inc.: *See—*
Fannin, Loyd W.; Malpass, Dennis B.; and Sanchez, Ramiro, 4,299,781, Cl. 260-665.00R.
Texas Instruments Incorporated: *See—*
De Filippis, Pietro; Salvatore, Amedeo; Trama, Luigi; and Notaro, Giuseppe, 4,299,026, Cl. 29-612.000.
Fontana, Robert E., Jr.; Bullock, David C.; Singh, Shalendra K.; and Bush, John M., 4,299,680, Cl. 204-192.00E.
Whelan, Paul L., 4,299,518, Cl. 406-62.000.
Textile Products Incorporated: *See—*
Rheaume, Walter A., 4,299,878, Cl. 428-257.000.
Textron Inc.: *See—*
Covington, Cecil E.; and Martin, Ronnie L., 4,299,540, Cl. 416-226.000.
Teyssier, Gerard; and Lepant, Marcel, to I.S.O. Process for the manufacture of calcium chloride. 4,299,809, Cl. 423-497.000.
Thackray, Malcolm: *See—*
Pettijohn, Richard R.; Leung, Charles; Manning, Ronald G.; Reyes, Zoila; and Thackray, Malcolm, 4,299,904, Cl. 430-139.000.
Thauer, William R., to General Housewares Corp. Placemat rack. 4,299,327, Cl. 211-186.000.
Thawley, Clive S.; Graham, Kenneth; and Brittain, Austin, to Uniroyal Limited. Apparatus for exposing a series of plates to radiation. 4,300,052, Cl. 250-453.000.
Thayer, Orla E. Axial flow valve. 4,299,156, Cl. 84-390.000.
Thermal Dynamics Corporation: *See—*
Johansson, Rune L., 4,300,035, Cl. 219-130.210.
Johansson, Rune L., 4,300,036, Cl. 219-130.330.
Thermo Electron Corporation: *See—*
Poirier, Victor L., 4,299,236, Cl. 128-728.000.
Thery, Jean-Francois; Maitre, Henri; and Fleuret, Jacques P. Device for determining the histogram of sizes of particles. 4,299,489, Cl. 356-336.000.
Thilly, William G.; and Skopek, Thomas R., to Massachusetts Institute of Technology. Assay for mutagenesis in bacterial cells. 4,299,915, Cl. 435-6.000.
Thoma, Wilhelm: *See—*
Berndt, Gerhard; Konig, Eberhard; Pedain, Josef; Thoma, Wilhelm; and Schroer, Walter, 4,299,868, Cl. 427-389.900.
Thomas, Warren R. Motorcycle safety system. 4,299,406, Cl. 280-733.000.
Thompson, Norman D.: *See—*
Delsman, Robert L.; and Thompson, Norman D., 4,299,320, Cl. 192-113.00B.
Thompson, Ralph J.: *See—*
Loshing, Clement T.; and Thompson, Ralph J., 4,300,125, Cl. 340-310.00A.
Thompson, Virley P. Dome structure having at least one environmentally isolatable compartment. 4,299,066, Cl. 52-81.000.
Thomson, Bruce A.: *See—*
Iribarne, Julio V.; and Thomson, Bruce A., 4,300,044, Cl. 250-282.000.
Thornton, J. W. Well cleaner. 4,299,282, Cl. 166-177.000.
Thornton, Robert K.: *See—*
Waters, James P.; and Thornton, Robert K., 4,299,491, Cl. 356-376.000.
3 Sigma Inc.: *See—*
Cronkrite, William E., 4,299,223, Cl. 128-287.000.
Thumm, Hans P.: *See—*
Seitz, Max; Thumm, Hans P.; Hagen, Gunther; and Grad, Gerald, 4,299,131, Cl. 73-789.000.
Tian, Khoo. Bricks. 4,299,071, Cl. 52-593.000.
Tieman, Charles H.; and Soloway, Samuel B., to Shell Oil Company. Stabilized cyandhydrin ester. 4,299,843, Cl. 424-304.000.
Tilles, Harry, to Stauffer Chemical Company. Herbicidal active sulfoxide compounds. 4,299,765, Cl. 260-239.0BF.
Timofeev, Boris P.: *See—*
Chizhikov, Vladimir M.; Matskin, Leonid A.; Fokin, Mikhail N.; Timofeev, Boris P.; Tokar, Mark N.; Balayan, Ruben D.; Trubin, German A.; Melik-Shakhnazarov, Alexandr M.; Barabashov, Dmitry A.; Dmitriev, Vladimir A.; and Vakhlyaev, Sergei V., 4,300,202, Cl. 364-567.000.
Tippmann, Eugene R. Insulated door and window construction. 4,299,060, Cl. 49-501.000.
Tlach, Hugo; Leifels, Klaus-Dieter; and Mischler, Werner, to Ciba-Geigy Corporation. Process for producing sized paper and cardboard with polyelectrolytes and epoxide-amine-polyamide reaction products. 4,299,654, Cl. 162-164.0EP.
TMC Corporation: *See—*
Svoboda, Josef, 4,299,404, Cl. 280-634.000.
Toa Nenryo Kogyo Kabushiki Kaisha: *See—*
Nishikawa, Eiichiro; Shinya, Masuo; Furukawa, Hiroshi; and Kaneko, Katsumi, 4,299,800, Cl. 423-219.000.
Toba, Susumu: *See—*
Matsumoto, Tadashi; Kuratani, Osamu; Hirose, Yasunori; and Toba, Susumu, 4,299,997, Cl. 568-678.000.
Tocco-Stel: *See—*
Reboux, Jean; and Lamote, Jean-Pierre, 4,300,031, Cl. 219-10.410.
Todo, Kenji; Miyanaka, Motoshi; and Tanaka, Toshio, to Hitachi, Ltd. Timer circuit arrangement in digital combustion control system. 4,299,556, Cl. 431-29.000.
Togawa, Fumio; Andoh, Haruo; and Tanabe, Toshihiko, to Hitachi Maxell, Ltd. Magnetic recording medium and process. 4,299,882, Cl. 428-329.000.
Tokar, Mark N.: *See—*
Chizhikov, Vladimir M.; Matskin, Leonid A.; Fokin, Mikhail N.; Timofeev, Boris P.; Tokar, Mark N.; Balayan, Ruben D.; Trubin, German A.; Melik-Shakhnazarov, Alexandr M.; Barabashov, Dmitry A.; Dmitriev, Vladimir A.; and Vakhlyaev, Sergei V., 4,300,202, Cl. 364-567.000.
Tokuno, Takashi: *See—*
Maruyama, Hiromi; Tokuno, Takashi; Shimizu, Masao; Ishikawa, Kohji; Narumi, Naoaki; and Ohguchi, Osamu, 4,300,234, Cl. 371-27.000.
Tokyo Kogaku Kikai Kabushiki Kaisha: *See—*
Aoki, Mitsugu; Oana, Yoshinori; Kato, Yasuo; and Ishihara, Taketoshi, 4,299,455, Cl. 351-30.000.
Tokyo Shibaura Denki Kabushiki Kaisha: *See—*
Baba, Masaharu; Honda, Kiyokazu; Yoshiike, Yoshiji; and Hashima, Akiyoshi, 4,299,430, Cl. 339-17.00D.
Kawamura, Kazuo, 4,300,168, Cl. 358-210.000.

Sawakata, Akira; Yamamuro, Hiroshi; and Kobayashi, Syouzou, 4,299,495, Cl. 356-442.000.
Tashiro, Norio, 4,300,072, Cl. 315-39.510.
Tokyo Shibaura Electric Co., Ltd.: *See—*
Minami, Masana; and Sekizawa, Hidekazu, 4,299,443, Cl. 350-162.0SF.
Toldy, Lajos: *See—*
Mago nee Karacsony, Erzsebet; Toldy, Lajos; Borsy, Jozsef; Tardos, Laszlo; Kiraly, Ildiko; and Ronay, Andras, 4,299,836, Cl. 424-261.000.
Tomburo, Anthony F.; and Kachur, Nicholas W., to Gibson Associates, Inc. Sprue gate for injection molding of plastic articles. 4,299,372, Cl. 249-107.000.
Tominaga, Satoshi: *See—*
Nakamura, Norio; Tominaga, Satoshi; and Kawata, Takashi, 4,299,560, Cl. 432-36.000.
Tomita, Makoto: *See—*
Fujitani, Yoshiyasu; Muraki, Hideaki; Kondoh, Shiroh; Tomita, Makoto; Yokota, Kouji; and Sobukawa, Hideo, 4,299,734, Cl. 252-462.000.
Tomiyasu, Kunihiko: *See—*
Ueno, Ryuzo; Matsuda, Toshio; Kanayama, Tatsuo; Tomiyasu, Kunihiko; Fujita, Yatsuka; and Inamine, Shigeo, 4,299,852, Cl. 426-266.000.
Tomlinson, Walter J., III, to Bell Telephone Laboratories, Incorporated. Time-division multiplexed spectrometer. 4,299,488, Cl. 356-328.000.
Tomy Kogyo Co., Inc.: *See—*
Nishimiya, Toru, 4,299,387, Cl. 273-119.00A.
Tonka Corporation: *See—*
Pauly, Ronald R.; Good, Thomas W.; and Hastings, John D., 4,299,051, Cl. 46-221.000.
Toray Industries, Inc.: *See—*
Aya, Toshihiko; Sasagawa, Takashi; and Kadoi, Sho, 4,299,945, Cl. 528-126.000.
Bairinji, Riyoichi; Kawabata, Tatsuo; and Tanaka, Tatsundo, 4,299,702, Cl. 210-433.200.
Torneback, Goran A. Anti-skid device for motor vehicles. 4,299,310, Cl. 188-4.00R.
Toshiba Kikai Kabushiki Kaisha: *See—*
Sawada, Kiyoshi; Ozawa, Nobuo; Oota, Katsuhiko; Narahara, Takefumi; Nakagawa, Masahiro; Fujimori, Yoshinobu, deceased; and Fujimori, Tomoyoshi, heir, 4,299,524, Cl. 414-117.000.
Toshimitsu, Yoshihiko: *See—*
Nishikawa, Masao; Toshimitsu, Yoshihiko; Aoyama, Toshihiko; Takaoka, Tokuro; Aoki, Takashi; and Sato, Yoichi, 4,299,302, Cl. 180-148.000.
Tournier, Claude. Machine for separating the bone and the flesh from the feet of slaughtered ungulates. 4,299,009, Cl. 17-1.00G.
Tower Systems Inc.: *See—*
Sanderson, William G.; Sumner, Richard B.; and Kragh, Loren G., 4,299,786, Cl. 261-128.000.
Towmotor Corporation: *See—*
Malecha, Richard J., 4,299,137, Cl. 74-512.000.
Towning, Dennis J. Self-watering plant growing bag. 4,299,056, Cl. 47-81.000.
Toyama, Tadao: *See—*
Shiba, Keisuke; Nakao, Sho; and Toyama, Tadao, 4,299,912, Cl. 430-302.000.
Toyo Seikan Kaisha Limited: *See—*
Mouri, Takenori; and Kayama, Hiroyuki, 4,299,849, Cl. 426-51.000.
Toyomaki, Kazuya, to Victor Company of Japan, Limited. Method and apparatus for multiplying an electrical signal. 4,300,019, Cl. 179-1.0GE.
Toyomaki, Kazuya, to Victor Company of Japan, Limited. Method and apparatus for eliminating pilot signal components from stereo demodulated signals. 4,300,020, Cl. 179-1.0GD.
Toyota Jidosha Kogyo Kabushiki Kaisha: *See—*
Kako, Hiroyoshi; and Arai, Hajime, 4,299,140, Cl. 74-665.00G.
Katayama, Nobuaki, 4,299,317, Cl. 192-53.00F.
Kobashi, Kiyoshi, 4,299,600, Cl. 55-213.000.
Nomura, Takao; Taguchi, Yoshio; Nagata, Kozaburo; and Isaka, Takuji, 4,299,924, Cl. 521-131.000.
Shinohara, Hiroshi; Otsuka, Yasuhiro; Matsumoto, Shinichi; Furutani, Toshinobu; and Wakizaka, Hiroshi, 4,299,627, Cl. 75-206.000.
Shirai, Kenji; and Takeuchi, Minoru, 4,299,311, Cl. 188-70.00R.
Takeda, Keisou, 4,299,089, Cl. 60-290.000.
Trama, Luigi: *See—*
De Filippis, Pietro; Salvatore, Amedeo; Trama, Luigi; and Notaro, Giuseppe, 4,299,026, Cl. 29-612.000.
Trane Company, The: *See—*
Brockman, George T.; Garavalia, Thomas A.; and Kabat, Richard W., 4,299,535, Cl. 415-160.000.
Derosier, Gregory S., 4,299,098, Cl. 62-238.600.
Traxler, James T., to Velsicol Chemical Corporation. Xanthenone-yl esters of phosphoric and phosphonic acids. 4,299,772, Cl. 260-335.000.
Tremmel, Robert A.; and Wieczerniak, Walter J., to Hooker Chemicals & Plastics Corp. Bath composition and method for electrodepositing cobalt-zinc alloys simulating a chromium plating. 4,299,671, Cl. 204-35.00R.
Trollope, Gregory A. R.: *See—*
Robota, Stephen; McGregor, Alastair J. H.; and Trollope, Gregory A. R., 4,299,606, Cl. 62-28.000.
Trotter, Jimmy R.: *See—*
McConnell, Richard L.; Trotter, Jimmy R.; and Sublett, Bobby J., 4,299,933, Cl. 525-170.000.
Troyer, Terrence J., to Ranco Incorporated. Fluid flow control valve. 4,299,373, Cl. 251-58.000.
Tru-Par, Inc.: *See—*
Grommes, John J.; and Bekemeier, Karl H., 4,299,196, Cl. 125-11.0AT.
Trubin, German A.: *See—*
Chizhikov, Vladimir M.; Matskin, Leonid A.; Fokin, Mikhail N.; Timofeev, Boris P.; Tokar, Mark N.; Balayan, Ruben D.; Trubin, German A.; Melik-Shakhnazarov, Alexandr M.; Barabashov, Dmitry A.; Dmitriev, Vladimir A.; and Vakhlyaev, Sergei V., 4,300,202, Cl. 364-567.000.
True Temper Corporation: *See—*
Curati, Marino, Jr., 4,299,697, Cl. 210-532.100.
TRW, Inc.: *See—*
Howell, Robert G., 4,299,887, Cl. 428-428.000.
Trybulski, Eugene J.: *See—*
Fryer, Rodney I.; Trybulski, Eugene J.; and Walser, Armin, 4,299,971, Cl. 560-107.000.
Tsai, Shirley C.; Graham, Richard H.; and Oder, Robin R., to Gulf Research & Development Company. Underground gasification of bituminous coal. 4,299,285, Cl. 166-259.000.
Tsubota, Junjiro. Solar energy focusing means. 4,299,201, Cl. 126-440.000.
Tsuchiya, Takuzo: *See—*
Huston, Larry; Morrison, Clifton H.; Rasmussen, Glenn; and Tsuchiya, Takuzo, 4,299,150, Cl. 83-110.000.
Tsudakoma Kogyo Kabushiki Kaisha: *See—*
Kinoshita, Shinichi, 4,299,257, Cl. 139-54.000.
Tsuiki, Hideo; Kikuchi, Yoshiyasu; Kirii, Hiroshi; and Nakamura, Koji, to Nippon Electric Co., Ltd. Display pattern preparing system. 4,300,136, Cl. 340-747.000.
Tsunekawa, Tokuichi: *See—*
Suzuki, Ryoichi; Matsumoto, Seiichi; Amikura, Takashi; Tsunekawa, Tokuichi; and Uchiyama, Takashi, 4,299,462, Cl. 354-53.000.
Tsuru, Mario, to Nissan Motor Co., Ltd. Sealing boots. 4,299,400, Cl. 277-212.0FB.
Tsutsui, Kyoji: *See—*
Hashimoto, Mitsuru; Sakai, Kiyoshi; Ohta, Masafumi; Kozima, Akio; Sasaki, Masaomi; and Tsutsui, Kyoji, 4,299,896, Cl. 430-58.000.
Tsuzuki, Akira: *See—*
Fujita, Hiroo; Tsuzuki, Akira; and Morokawa, Shigeru, 4,300,137, Cl. 340-765.000.
Tu, Hosheng; and DeCoster, David C., to UOP Inc. FCC Process using low coke-make FCC catalyst. 4,299,688, Cl. 208-120.000.
Tu, Hosheng, to UOP Inc. High octane FCC catalyst. 4,299,733, Cl. 252-455.00Z.
Tu, Hosheng; and Sohn, Stephen W., to UOP Inc. Process for transalkylation of alkylaromatic hydrocarbons. 4,300,012, Cl. 585-470.000.
Tucker, Leroy W.: *See—*
Wilson, Jeffrey V.; and Tucker, Leroy W., 4,299,431, Cl. 339-60.00R.
Tucker, Thomas R.: *See—*
Schaefer, Robert J.; Ayers, Jack D.; and Tucker, Thomas R., 4,299,860, Cl. 427-53.100.
Tummes, Hans; Cornils, Boy; and Noeske, Heinz, to Ruhrchemie AG. Process for preparing aldehydes. 4,299,990, Cl. 568-454.000.
Tung, Joseph S.: *See—*
Gilovich, Paul A.; and Tung, Joseph S., 4,300,176, Cl. 360-105.000.
Tungler, Antal; Mathe, Tibor; Petro, Jozsef; and Bende, Zoltan, to Reanal Finomvegyszergyar; and Budapesti Muszaki Egyetem. Process for the selective hydroxymethylation of nitrotoluenes. 4,299,992, Cl. 568-587.000.
Turi, Julius; and Stotz, Erich, to Dr. Ing. h.c.F. Porsche AG. Locking system for two brake pedals of a motor vehicle mounted on a common shaft. 4,299,136, Cl. 74-478.500.
Turley, Charles E., to Turley, Charles E. Heat radiating burner for use in fireplaces. 4,299,197, Cl. 126-165.000.
Turner, Earl W.: *See—*
De Stefanis, Vincent A.; and Turner, Earl W., 4,299,848, Cl. 426-20.000.
Turner, John E., to Techna, Inc. Induction balance metal detector with ferrous and non-ferrous metal identification. 4,300,097, Cl. 324-329.000.
Turner nee Pobocik, Marion, heir: *See—*
Pobocik, Anthony B., deceased; Turner nee Pobocik, Marion, heir; Pobocik, Bernard, heir; Pobocik, Michael, heir; Pobocik, James, heir; Pobocik, Thomas, heir; Pobocik, Robert, heir; and Pobocik, Agnes, heir, 4,299,527, Cl. 414-462.000.
Tyler Refrigeration Corporation: *See—*
Ibrahim, Fayez F., 4,299,092, Cl. 62-81.000.
Myers, James E.; Kennedy, Tom E.; and Perey, Arthur, 4,299,099, Cl. 62-256.000.
Tyler, Timothy N.; and Park, Jack H., to Texaco Inc. Surfactant waterflooding enhanced oil recovery process. 4,299,711, Cl. 252-8.55D.
Tyschenko, Ljudmila A.: *See—*
Kovaleva, Irina D.; Tyschenko, Ljudmila A.; and Potekhin, Valery F., 4,298,993, Cl. 3-1.912.
Uchida, Takashi: *See—*
Ito, Noboru; Sakamoto, Eiichi; Kawasaki, Mikio; and Uchida, Takashi, 4,299,908, Cl. 430-244.000.

Uchiyama, Masaki: *See—*
Mitsuhashi, Yasuo; Kiuchi, Masashi; Takasu, Yoshio; Fukumoto, Hiroshi; Hino, Takashi; and Uchiyama, Masaki, 4,299,900, Cl. 430-122.000.
Uchiyama, Takashi: *See—*
Suzuki, Ryoichi; Matsumoto, Seiichi; Amikura, Takashi; Tsunekawa, Tokuichi; and Uchiyama, Takashi, 4,299,462, Cl. 354-53.000.
Udd, Eric: *See—*
Cahill, Richard F.; and Udd, Eric, 4,299,490, Cl. 356-350.000.
Uebele, Curtie E.: *See—*
Velenyi, Louis J.; Uebele, Curtie E.; and Dolhyj, Serge R., 4,299,991, Cl. 568-573.000.
Ueda, Toshitsugu; and Kousaka, Fusao, to Yokogawa Electric Works, Ltd. Force transducer. 4,299,122, Cl. 73-862.590.
Uede, Hisashi: *See—*
Nakauchi, Hiroshi; Koyanagi, Katubumi; Kato, Hiroaki; Takafuji, Yutaka; Inami, Yasuhiko; and Uede, Hisashi, 4,300,138, Cl. 340-785.000.
Ueno, Ryuzo; Matsuda, Toshio; Kanayama, Tatsuo; Tomiyasu, Kunihiko; Fujita, Yatsuka; and Inamine, Shigeo, to Kabushiki Kaishaveno Seiyakuoyo Kenkyojo. Process for the preparation of botulinal resistant meat products. 4,299,852, Cl. 426-266.000.
UHDE GmbH: *See—*
Mose, Luciano; Schurig, Helmuth; and Strasser, Bernd, 4,299,681, Cl. 204-255.000.
Uhl, George A.: *See—*
Baillie, Lloyd A.; and Uhl, George A., 4,299,116, Cl. 73-30.000.
Ukawa, Kiyoshi: *See—*
Nohara, Akira; Sugihara, Hirosada; and Ukawa, Kiyoshi, 4,299,963, Cl. 546-89.000.
Ulch, Bryan D., to FMC Corporation. Weight sorting memory circuit. 4,299,326, Cl. 209-564.000.
Ulin, Roy A.: *See—*
Hof, Craig R.; Osio, Concepcion; and Ulin, Roy A., 4,299,727, Cl. 252-408.000.
Ullman, Edwin F.: *See—*
Litman, David J.; and Ullman, Edwin F., 4,299,916, Cl. 435-6.000.
Umstattd, Karen. Fingernail reinforcing method. 4,299,243, Cl. 132-73.000.
Union Carbide Corporation: *See—*
Baskent, Feyyaz O.; and Reedy, James D., 4,299,923, Cl. 521-110.000.
Carter, William J.; and Eigenbrod, Lester K., 4,299,091, Cl. 62-50.000.
Hannan, Roy B., III; Goddard, Errol D.; and Galante, Denise C., 4,299,817, Cl. 424-70.000.
Lee, Young-Jin, 4,299,780, Cl. 260-513.00N.
Tellis, Cyril, 4,299,802, Cl. 423-244.000.
Uniroyal Ltd.: *See—*
Giesbrecht, George G., 4,299,789, Cl. 264-176.00R.
Thawley, Clive S.; Graham, Kenneth; and Brittain, Austin, 4,300,052, Cl. 250-453.000.
United Kingdom Atomic Energy Authority: *See—*
Kennedy, Peter; and North, Bernard, 4,299,631, Cl. 501-91.000.
Mills, Alfred L.; Reekie, John; and Williams, John A., 4,299,271, Cl. 165-47.000.
United Merchants and Manufacturers, Inc.: *See—*
Gregorian, Razmic S.; and Namboodri, Chettoor G., 4,299,591, Cl. 8-477.000.
U.S. Industries, Inc.: *See—*
White, Charles A.; and Holland, Eddie L., 4,299,191, Cl. 119-18.000.
United States of America
Air Force: *See—*
Aloi, Anthony J.; and Fritz, Robert J., 4,299,158, Cl. 89-137.000.
Carignan, Donald J.; and Lewis, William, 4,299,166, Cl. 102-501.000.
Task, Harry L.; and Kuperman, Gilbert G., 4,299,451, Cl. 350-407.000.
Task, Harry L., 4,299,482, Cl. 356-124.000.
Army: *See—*
Ansell, Joseph L.; and Baker, Raymond J., 4,300,115, Cl. 338-314.000.
Bly, Vincent T., 4,299,864, Cl. 427-160.000.
Carrow, William W.; and Moulton, Joseph R., 4,299,575, Cl. 434-11.000.
Energy: *See—*
Campana, Robert J., 4,299,661, Cl. 376-251.000.
Ciszek, Theodore F.; and Schwuttke, Guenter H., 4,299,648, Cl. 156-608.000.
Hardin, Roy T., Jr., 4,299,662, Cl. 376-260.000.
Montoya, Arsenio P., 4,299,168, Cl. 102-202.110.
Interior: *See—*
Bernard, Thomas E.; and Stein, Richard L., 4,299,216, Cl. 128-205.120.
National Aeronautics and Space Administration; administrator; with respect to an invention of:
Hohl, Frank; and De Young, Russell J., to United States of America, National Aeronautics and Space Administration. Large volume multiple-path nuclear pumped laser. 4,300,106, Cl. 331-94.50C.
Hummer, Robert F.; and Upton, Deane T. Scanner. 4,300,159, Cl. 358-109.000.
National Aeronautics and Space Administration: *See—*
Etzel, John G.; and Munford, James A., 4,299,492, Cl. 356-386.000.
United States of America, National Aeronautics and Space Administration; Hohl, Frank; and De Young, Russell J.; 4,300,106, Cl. 331-94.50C.
Navy: *See—*
Burns, Dallas D.; and Brannan, Jack D., 4,299,157, Cl. 89-1.50D.
Michel, David J.; and Smith, Hugh H., 4,299,625, Cl. 75-174.000.
Miguel, Anthony S.; Perry, John L.; and Wittman, Gary R., 4,299,872, Cl. 428-117.000.
Schaefer, Robert J.; Ayers, Jack D.; and Tucker, Thomas R., 4,299,860, Cl. 427-53.100.
Soltan, Parviz; and Fletcher, Paul C., 4,299,447, Cl. 350-334.000.
Swiatosz, Edmund; and Lane, Bruce V., 4,299,579, Cl. 434-226.000.
Wilson, Jeffrey V.; and Tucker, Leroy W., 4,299,431, Cl. 339-60.00R.
U.S. Philips Corporation: *See—*
Bouwmeester, Gerrit, 4,299,532, Cl. 414-750.000.
Gustin, Pol A. G. J.; and Schayes, Raymond G. G., 4,300,146, Cl. 346-155.000.
Koel, Gerrit J.; Gorter, Frederik W.; and Gerkema, Jan T., 4,300,177, Cl. 360-113.000.
Pusch, Gunter; and Hoffmann, Alexander, 4,300,160, Cl. 358-113.000.
Rademaker, Gerrit, 4,300,018, Cl. 178-70.00R.
Robers, Klass H. J., 4,300,162, Cl. 358-160.000.
van de Plassche, Rudy J., 4,300,103, Cl. 330-274.000.
United States Steel Corporation: *See—*
Martin, Wayne A., 4,299,110, Cl. 72-327.000.
United States Surgical Corporation: *See—*
Noiles, Douglas G., 4,299,224, Cl. 128-325.000.
United Technologies Corporation: *See—*
Ferris, Donald L.; and Ogle, Peter C., 4,299,538, Cl. 416-134.00A.
Waters, James P.; and Thornton, Robert K., 4,299,491, Cl. 356-376.000.
Universal Instruments Corporation: *See—*
Ackerman, Daniel W., 4,299,436, Cl. 339-258.00R.
University of Alabama, The: *See—*
Skorski, Roman S.; Skorska, Maria B.; and Skorska, Malgorzata B., 4,299,620, Cl. 75-53.000.
University of Iowa Research Foundation: *See—*
Spencer, Donald L., 4,299,200, Cl. 126-434.000.
University of Minnesota, The Regents of the: *See—*
Dorman, Frank D., 4,299,220, Cl. 128-260.000.
UOP Inc.: *See—*
Antos, George J., 4,299,689, Cl. 208-139.000.
Dodds, Alan R.; and Imai, Tamotsu, 4,299,989, Cl. 568-397.000.
Frame, Robert R., 4,299,729, Cl. 252-412.000.
Tu, Hosheng; and DeCoster, David C., 4,299,688, Cl. 208-120.000.
Tu, Hosheng, 4,299,733, Cl. 252-455.00Z.
Tu, Hosheng; and Sohn, Stephen W., 4,300,012, Cl. 585-470.000.
Upjohn Company, The: *See—*
Dopp, Robert B., 4,299,593, Cl. 23-232.00R.
Upton, Deane T.: *See—*
United States of America, National Aeronautics and Space Administration; Hummer, Robert F.; and Upton, Deane T., 4,300,159, Cl. 358-109.000.
Ura, Mitsuru: *See—*
Ogihara, Satoru; Ura, Mitsuru; and Suzuki, Yoshihiro, 4,299,873, Cl. 428-137.000.
Usagawa, Yasushi: *See—*
Fujimatsu, Wataru; Usagawa, Yasushi; Sasaki, Osamu; and Matsuura, Katsumi, 4,299,914, Cl. 430-384.000.
Uskokovic, Milan R.: *See—*
Confalone, Pasquale N.; Pizzolato, Giacomo; and Uskokovic, Milan R., 4,299,968, Cl. 549-68.000.
USM Corporation: *See—*
Piestert, Gerhard; and Gilch, Heinz O., 4,299,942, Cl. 526-323.100.
Usui, Tatuo: *See—*
Maeda, Akio; Usui, Tatuo; and Yasuda, Atsushi, 4,299,944, Cl. 528-89.000.
V. Kann Rasmussen Holding A/S: *See—*
Nielsen, Elgard, 4,299,068, Cl. 52-204.000.
Vahtra, Tonu: *See—*
Kullendorff, Anders; and Vahtra, Tonu, 4,299,087, Cl. 60-39.14M.
Vakhlyaev, Sergei V.: *See—*
Chizhikov, Vladimir M.; Matskin, Leonid A.; Fokin, Mikhail N.; Timofeev, Boris P.; Tokar, Mark N.; Balayan, Roben D.; Trubin, German A.; Melik-Shakhnazarov, Alexandr M.; Barabashov, Dmitry A.; Dmitriev, Vladimir A.; and Vakhlyaev, Sergei V., 4,300,202, Cl. 364-567.000.
Valcom Limited: *See—*
Brandigampola, Don E., 4,300,140, Cl. 343-873.000.
Van Doorne's Transmissie B.V.: *See—*
Van der Hardt Aberson, Frederik E. C., 4,299,586, Cl. 474-201.000.
Van Auken, John A. Method of making an electrically conductive game ball. 4,299,029, Cl. 29-877.000.
Van Auken, John A. Electrically conductive game ball. 4,299,384, Cl. 273-61.00R.
VanBuskirk, Glenn A.: *See—*
Patil, Deepak R.; and VanBuskirk, Glenn A., 4,299,501, Cl. 366-349.000.
Van Camp, James O. Device for overriding a time switch of an air conditioning system. 4,299,096, Cl. 62-180.000.

VanDeberg, Walter H.: *See—*
Koch, Richard L.; and VanDeberg, Walter H., 4,299,323, Cl. 198-774.000.
van de Plassche, Rudy J., to U.S. Philips Corporation. Push-pull amplifier. 4,300,103, Cl. 330-274.000.
Van der Hardt Aberson, Frederik E. C., to Van Doorne's Transmissie B.V. Composite driving belt and transverse element for same. 4,299,586, Cl. 474-201.000.
van der Linde, Robert: *See—*
Belder, Eimbert G.; Legg, John C.; and van der Linde, Robert, 4,299,742, Cl. 260-22.0EP.
van der Togt, Jacobus C., to Haagse Bakkerijmachinefabriek Arnold Kalmeijer B.V. Device for making batches of dough ready for the oven. 4,299,550, Cl. 425-321.000.
Vandevoorde, Jacques P.: *See—*
Hansen, Hans J.; Myl, Alfred D.; and Vandevoorde, Jacques P., 4,299,815, Cl. 424-1.000.
Van Horn, Joseph M.: *See—*
Epstein, Paul; Ballas, John S., Jr.; Van Horn, Joseph M.; and Mandler, John J., Jr., 4,299,234, Cl. 128-698.000.
Van Husen, Hendrik, to GTE Automatic Electric Labs Inc. Line circuit controlled by a hall effect device. 4,300,021, Cl. 179-18.0FA.
Van Landingham, Kenneth E., to General Motors Corporation. Motor voltage feedback for a servo motor control system. 4,300,081, Cl. 318-599.000.
Vann, Roy R.; Ribble, George W.; and George, Flint R., to Geo Vann, Inc. Bar actuated vent assembly and perforating gun. 4,299,287, Cl. 166-297.000.
van Raamsdonk, Cornelis, to Olympia Werke AG. Closing device for an ink printing head. 4,300,145, Cl. 346-140.00R.
Varnon, James E.: *See—*
Brown, Alfred; Kudchadker, Mohan V.; Varnon, James E.; and Whittington, Lawrence E., 4,299,284, Cl. 166-245.000.
Varta Batterie Aktiengesellschaft: *See—*
Sauer, Hans; and Kloss, Wolfgang, 4,299,646, Cl. 156-278.000.
Vasquez, Tulio. Method of protecting an area and control system for watchman tours. 4,300,124, Cl. 340-306.000.
Vaw Leichtmetall GmbH: *See—*
Kruger, Gerhard; and Griep, Winfried, 4,299,139, Cl. 74-560.000.
VDO Adolf Schindling AG: *See—*
Romer, Horst, 4,299,444, Cl. 350-278.000.
Vedda, Louis: *See—*
Birat, Jean-Pierre; and Vedda, Louis, 4,299,267, Cl. 164-502.000.
Vega, Mary-Louise: *See—*
Heffernan, William R.; Vega, Mary-Louise; and Gingras, Joel A., Sr., 4,299,185, Cl. 116-202.000.
Velasco, Ralph E., Jr. Method for producing corn masa. 4,299,857, Cl. 426-618.000.
Velenyi, Louis J.; Uebele, Curtie E.; and Dolhyj, Serge R., to Standard Oil Company, The. Formation of hydroperoxides. 4,299,991, Cl. 568-573.000.
Velenyi, Louis J.: *See—*
Dolhyj, Serge R.; and Velenyi, Louis J., 4,299,987, Cl. 568-321.000.
Velsicol Chemical Corporation: *See—*
Gourse, Jerome A., 4,299,615, Cl. 71-86.000.
Traxler, James T., 4,299,772, Cl. 260-335.000.
Vendacopy, Inc.: *See—*
Oldenkamp, Ralph J.; and Weekes, Frederic D., 4,300,042, Cl. 235-449.000.
Venetta, Henry J. Metal preheat conveyor with improved air flow properties. 4,299,566, Cl. 432-241.000.
Venkatasubramanian, Kalyanasundram; Jain, Surendar M.; and Giuffrida, Anthony J., to Hubinger Co., The; and Ionics, Inc., a part interest to each. Process for the preferential separation of fructose from glucose. 4,299,677, Cl. 204-180.00P.
Vernaleken, Hugo: *See—*
Weirauch, Kurt; Horbach, Alfred; and Vernaleken, Hugo, 4,299,948, Cl. 528-171.000.
Vickers, David W. Hand-operated shearing devices. 4,299,030, Cl. 30-261.000.
Victor Company of Japan, Limited: *See—*
Toyomaki, Kazuya, 4,300,019, Cl. 179-1.0GE.
Toyomaki, Kazuya, 4,300,020, Cl. 179-1.0GD.
Viden Corporation of America: *See—*
Gould, Geroge K.; and Steinberg, Eric, 4,300,040, Cl. 235-381.000.
View Engineering, Inc.: *See—*
Sacks, Jack, 4,300,164, Cl. 358-163.000.
Vince, Ernest S.: *See—*
Copeland, Jerry T.; and Vince, Ernest S., 4,299,341, Cl. 224-42.03B.
Vingris, Rudy: *See—*
Clay, B. Jan; Braun, Phillip H.; and Vingris, Rudy, 4,299,665, Cl. 202-204.000.
Violet, James T. Leg stabilizer construction. 4,299,213, Cl. 128-133.000.
Vitatron Scientific B.V.: *See—*
Hogen Esch, Johannes H. L., 4,299,796, Cl. 422-63.000.
Vite, Jean P.; and Bakke, Alf, to Borregaard Industries Limited, Norge. Control of insects with 3,3,7-trimethyl-2,9-dioxatricyclo[3.3.1.0^{4,7}]nonane in mixture with ethanol, and optionally, α-pinene. 4,299,818, Cl. 424-84.000.
Vivitar Corporation: *See—*
Betensky, Ellis, 4,299,454, Cl. 350-427.000.
Voest-Alpine Aktiengesellschaft: *See—*
Siebenhofer, Gottfried; Suessenbeck, Heinrich; and Zitz, Alfred, 4,299,517, Cl. 405-296.000.
Vogel, Roger F.: *See—*
Madgavkar, Ajay M.; Vogel, Roger F.; and Swift, Harold E., 4,299,086, Cl. 60-39.060.
Volkswagenwerk AG: *See—*
Hagemann, Edmund; and Wildschutte, Herbert, 4,299,057, Cl. 49-375.000.
von Behren, Robert A.: *See—*
Barnes, Charles A.; and von Behren, Robert A., 4,300,179, Cl. 360-127.000.
Vought Corporation: *See—*
Dance, William E.; and Bumgardner, Harry M., Jr., 4,300,054, Cl. 376-190.000.
Vranka, Joseph S.: *See—*
Pickart, Don E.; Reed, Philip W.; and Vranka, Joseph S., 4,299,888, Cl. 428-457.000.
W. H. Brady Co.: *See—*
Maser, Thomas L., 4,300,029, Cl. 200-159.00B.
W. Haking Enterprises, Ltd.: *See—*
Chan, Kwok Y., 4,299,465, Cl. 354-145.000.
W. Hegenscheidt Gesellschaft mbH: *See—*
Gottschalk, William P., 4,299,017, Cl. 29-90.00R.
WABCO Fahrzeugbremsen GmbH: *See—*
Fauck, Gerhard, 4,299,427, Cl. 303-22.00A.
Fauck, Gerhard, 4,299,428, Cl. 303-22.00A.
Wada, Fumio: *See—*
Omura, Yoshiaki; Mori, Fumio; Fujita, Yoshiji; Nishida, Takashi; Hosogai, Takeo; Aihara, Sukeji; Tamai, Yoshin; Wada, Fumio; and Itoi, Kazuo, 4,299,839, Cl. 424-274.000.
Wada, Takamichi; and Terui, Yasuaki, to Matsushita Electric Industrial Co., Ltd. Solid-state imaging apparatus. 4,300,163, Cl. 358-163.000.
Wada, Takanori; Sano, Hitoshi; Sato, Shigekatsu; Saiki, Yukihiro; Shimizu, Keisuke; Hirata, Masanori; Naka, Junichi; Takahashi, Takayoshi; Ishii, Toshiaki; and Kamiki, Toshikazu, to Snow Brand Milk Products Co. Ltd. Method of producing a cheese product in snack-sized form. 4,299,855, Cl. 426-512.000.
Wagensonner, Eduard: *See—*
Wagner, Karl; and Wagensonner, Eduard, 4,299,467, Cl. 354-195.000.
Waggener, Richard W.: *See—*
Ilardi, Joseph M.; Waggener, Richard W.; and Frint, William R., 4,299,799, Cl. 423-206.00T.
Wagner, Friedemann, to Ernst Reiner KG Feinmechanik und Apparatebau. Means for yieldably coupling a shaft to counter wheels or the like. 4,299,512, Cl. 403-357.000.
Wagner, Gerhard; Nagel, Dieter; and Kessler, Georg, to Magirus-Deutz Aktiengesellschaft. Arrangement for use on a vehicle for transporting portable bridges. 4,299,002, Cl. 14-2.400.
Wagner, Karl; and Wagensonner, Eduard, to Agfa-Gevaert Aktiengesellschaft. Focussing system for still and motion-picture cameras. 4,299,467, Cl. 354-195.000.
Wagner, Kuno: *See—*
Mohring, Edgar; Muller, Hanns P.; and Wagner, Kuno, 4,300,003, Cl. 568-863.000.
Wahl, Edward C., to Gits Brothers Mfg. Co. Pressure compensating shaft seal. 4,299,398, Cl. 277-65.000.
Wahnelt, Jorg: *See—*
Ehrich, Hans-Jorgen; and Wahnelt, Jorg, 4,299,672, Cl. 204-43.00N.
Waite, James B.: *See—*
Yoknis, Myron; and Waite, James B., 4,300,199, Cl. 364-557.000.
Wakabayashi, Hiroharu; and Niiro, Yasuhiko, to Kokusai Denshin Denwa Co., Ltd. Optical repeater monitoring system. 4,300,239, Cl. 455-601.000.
Wakamatsu, Jack K., to C. W. Cole & Company, Inc. Light fixture unit for open plan office. 4,300,185, Cl. 362-33.000.
Wakizaka, Hiroshi: *See—*
Shinohara, Hiroshi; Otsuka, Yasuhiro; Matsumoto, Shinichi; Furutani, Toshinobu; and Wakizaka, Hiroshi, 4,299,627, Cl. 75-206.000.
Wallen, Fred L.; and Huxel, Edward, to American Can Company. Package for fragile food items. 4,299,850, Cl. 426-124.000.
Walser, Armin: *See—*
Fryer, Rodney I.; Trybulski, Eugene J.; and Walser, Armin, 4,299,971, Cl. 560-107.000.
Walsh, Dennis E.: *See—*
Pelrine, Bruce P.; and Walsh, Dennis E., 4,299,594, Cl. 44-50.000.
Walter, John, to Continental Group, Inc., The. Container closure device. 4,299,330, Cl. 220-288.000.
Walther, Willy: *See—*
Dix, Ernst; Muller, Gerhard; Notzel, Hans; Walther, Willy; and Zahn, Detlef, 4,299,170, Cl. 102-355.000.
Wambach, Raimund: *See—*
Wissner, Adolf; Hauser, Werner; Bitners, Feliks; and Wambach, Raimund, 4,300,004, Cl. 570-211.000.
Wang, Shih-Ping, to Diagnostic Information, Inc. Panel type X-ray image intensifier tube and radiographic camera system. 4,300,046, Cl. 250-323.000.
Wang, Yu-chang J.; and Wong, Thomas M., to E. R. Squibb & Sons, Inc. Corticosteroid stick formulations. 4,299,828, Cl. 424-238.000.
Wangler, Richard J.: *See—*
Benckert, Willis J.; and Wangler, Richard J., 4,299,393, Cl. 273-310.000.
Ward, Joseph W.; and Schroeder, Russell G., II, to Xerox Corporation. Job recovery enhancement in computer fanfold reproduction. 4,299,477, Cl. 355-14.00R.

Ware, R. Louis. Hydroponic assembly and wafer for use therein. 4,299,054, Cl. 47-64.000.
Washburn, Hudson A., to Intel Magnetics, Inc. Method for adjusting signal level output from a magnetic bubble detector. 4,300,209, Cl. 365-8.000.
Watanabe, Kazuo: *See*—
Kume, Toshiaki; Kakinuma, Toshihide; Makabe, Hachiro; Watanabe, Kazuo; and Takenoya, Hideaki, 4,299,180, Cl. 112-138.00E.
Watanabe, Keiichi: *See*—
Mitsui, Sadao; Takahashi, Minoru; and Watanabe, Keiichi, 4,300,131, Cl. 340-618.000.
Watanabe, Sadao: *See*—
Kimira, Hiroshi; Abiko, Kenji; Sato, Takashi; Yoshii, Isamu; Watanabe, Sadao; and Takei, Yutaka, 4,299,622, Cl. 75-124.000.
Watanabe, Tomoyoshi; Nakai, Toshio; Kuzuya, Susumu; Onoda, Hiroshi; Asai, Akira; Iwase, Takayuki; and Nakamura, Kazuo, to Brother Kogyo Kabushiki Kaisha. Character selection mechanism for a typewriter. 4,299,503, Cl. 400-161.500.
Watanabe, Tsutomu: *See*—
Nanjo, Motoyuki; Watanabe, Tsutomu; Koshibe, Shigeru; and Azuma, Keiji, 4,299,947, Cl. 528-139.000.
Waters, James P.; and Thornton, Robert K., to United Technologies Corporation. Noncontact optical gauging system. 4,299,491, Cl. 356-376.000.
Wattron, Albert, to Belrecolt S.A. Rotary-scythe mower with cutter discs. 4,299,077, Cl. 56-13.600.
Wayman, Paul L. Crossword system and game apparatus. 4,299,578, Cl. 434-177.000.
Weatherly, Douglas B., to Polyvend Inc. Anti-theft delivery module. 4,299,334, Cl. 221-1.000.
Weaver, Harry R.: *See*—
Crisman, Thomas L.; Moore, Stanley R.; and Weaver, Harry R., 4,299,100, Cl. 62-457.000.
Webb, J. Talmadge, to Yates, August Betts. Protective device for instruments and locking of aircraft controls. 4,299,361, Cl. 244-224.000.
Webb, John L.: *See*—
Knodt, Ruediger W.; Charland, Terrence D.; Hull, Charles J.; Hutton, James E.; Webb, John L.; and Yonovich, John R., 4,299,478, Cl. 355-3.00R.
Weber, Harold J. Direct current power supply. 4,300,090, Cl. 323-311.000.
Weber, Robert; and Gallwas, Johannes, to Kraftwerk Union Aktiengesellschaft. Inspection and testing device. 4,299,656, Cl. 376-249.000.
Webster, Frank G.: *See*—
Klose, Thomas R.; and Webster, Frank G., 4,299,894, Cl. 430-9.000.
Weekes, Frederic D.: *See*—
Oldenkamp, Ralph J.; and Weekes, Frederic D., 4,300,042, Cl. 235-449.000.
Wehle, Volker; Rupilius, Wolfgang; Reiffert, Jurgen; and Rogall, Gabriele, to Henkel Kommanditgesellschaft auf Aktien; and Deutsche Gold- und Silber Scheideanstalt vormals Roessler. Aqueous media of decreased corrosiveness for iron-containing metals. 4,299,725, Cl. 252-389.00A.
Wei, Chung H., to Stauffer Chemical Company. Process for the control of free radical polymerization. 4,299,940, Cl. 526-278.000.
Weidehaas, Gerd: *See*—
Karmann, Werner; Weidehaas, Gerd; Howe, Bernd; and Piel, Frank, 4,299,231, Cl. 128-639.000.
Weidner, Peter; and Stutzle, Dietmar, to Diehl GmbH & Co. Generator for a spin projectile having a guide band. 4,299,169, Cl. 102-210.000.
Weirauch, Kurt; Horbach, Alfred; and Vernaleken, Hugo, to Bayer Aktiengesellschaft. Macrocyclic polycarbonates. 4,299,948, Cl. 528-171.000.
Weiss, Karl, to sma Shredder-Mull Aufbereitung Schrott Maschinen Abbruch GmbH. Apparatus for the selective separation of non-ferromagnetic metals from a mixture of comminuted metallic scrap. 4,299,376, Cl. 266-205.000.
Weiss, Lee E.; and Dalton, Michael J., to Intermedics, Inc. Epicardial heart lead assembly. 4,299,239, Cl. 128-785.000.
Weisz, Paul B.: *See*—
Haag, Werner O.; Rodewald, Paul G.; and Weisz, Paul B., 4,300,009, Cl. 585-408.000.
Wellman, Russel E.: *See*—
Azar, Jack C.; and Wellman, Russel E., 4,299,899, Cl. 430-108.000.
Wells, Bruce D., to Calgon Corporation. Regeneration of carbon employed in the wet process production of phosphoric acid. 4,299,805, Cl. 423-321.00R.
Welsch, Thomas E. Dispenser for cigarette lighters. 4,299,333, Cl. 221-1.000.
Wemple, Stuart H.: *See*—
Niehaus, William C.; and Wemple, Stuart H., 4,300,148, Cl. 357-15.000.
Werdehausen, Achim: *See*—
Meffert, Alfred; Scheuermann, Fanny; and Werdehausen, Achim, 4,299,737, Cl. 252-522.00R.
Werner, Anton, to Kuhn, S.A. Mower-conditioner. 4,299,078, Cl. 56-14.500.
Werner & Pfleiderer: *See*—
Buchheit, Dieter H., 4,299,499, Cl. 366-83.000.
Werner, Wolfgang: *See*—
Berger, Dieter; Frey, Gunter; Kuhr, Manfred; and Werner, Wolfgang, 4,299,917, Cl. 435-19.000.
Wernicke, Ubbo, to Agfa-Gevaert AG. Photographic reversal process without second exposure. 4,299,913, Cl. 430-379.000.
Western Electric Co., Inc.: *See*—
Lopresti, Philip V., 4,300,196, Cl. 364-489.000.
Westfalia Separator AG: *See*—
Bruning, Paul; and Monkenbusch, Alfons, 4,299,353, Cl. 233-7.000.
Westinghouse Electric Corp.: *See*—
Butler, John M., III, 4,300,066, Cl. 310-53.000.
Jones, Charles H., 4,300,215, Cl. 367-11.000.
McMillin, John V.; and Schroeder, Dale W., 4,300,123, Cl. 340-146.30Z.
Meuschke, Robert E.; and Wolfe, Donald L., 4,299,658, Cl. 250-506.000.
Schneider, Urban A.; Monley, Robert E.; Glatthorn, Raymond H.; and Nelson, Robert L., 4,300,034, Cl. 219-73.000.
Skwirut, Henry; Young, Robert G.; and Morton, Edward W., 4,300,073, Cl. 315-53.000.
Westland Aircraft Limited: *See*—
Doe, Reginald A., 4,300,200, Cl. 364-565.000.
Wever, Ruben; and Moyles, Daniel C., to Wiltron Company. Technique for measuring a duration of signaling pulses in a telephone circuit. 4,300,024, Cl. 179-175.20A.
Whelan, Paul L., to Texas Instruments Incorporated. Manufacturing work station. 4,299,318, Cl. 406-62.000.
White, Charles A.; and Holland, Eddie L., to U.S. Industries, Inc. Chick cage system. 4,299,191, Cl. 119-18.000.
White, James F.: *See*—
Howard, James K.; and White, James F., 4,300,149, Cl. 357-71.000.
Whitfield, Fred J.; and Doyel, Arthur T., Jr. Methods and materials for conducting heat from electronic components and the like. 4,299,715, Cl. 252-74.000.
Whittam, Thomas V., to Imperial Chemical Industries Limited. Isomerization of xylenes. 4,300,013, Cl. 585-481.000.
Whittington, Lawrence E.: *See*—
Brown, Alfred; Kudchadker, Mohan V.; Varnon, James E.; and Whittington, Lawrence E., 4,299,284, Cl. 166-245.000.
Whitworth, Barrie F. Forming permanent bends in convoluted reinforced flexible tubing. 4,299,105, Cl. 72-54.000.
Wideview Scope Mount Corporation: *See*—
Johannsen, Donald R., 4,299,044, Cl. 42-1.0ST.
Wieczerniak, Walter J.: *See*—
Tremmel, Robert A.; and Wieczerniak, Walter J., 4,299,671, Cl. 204-35.00R.
Wiernicki, Michael V., to Facet Enterprises, Inc. Power generator for telemetry transmitter. 4,300,119, Cl. 340-58.000.
Wiggins, Allan A., Jr.: *See*—
Marcus, Frederick; Dikeman, Richard; and Wiggins, Allan A., Jr., 4,299,015, Cl. 28-221.000.
Wikstrom, Bo B.: *See*—
Bengtsson, Nils K.; and Wikstrom, Bo B., 4,299,312, Cl. 188-165.000.
Wild, Gene M.: *See*—
Hamill, Robert L.; and Wild, Gene M., 4,299,953, Cl. 536-17.00R.
Wildschutte, Herbert: *See*—
Hagemann, Edmund; and Wildschutte, Herbert, 4,299,057, Cl. 49-375.000.
Wilfert, Thomas: *See*—
Knapp, Heinrich; Sauer, Rudolf; Romann, Peter; Hafner, Udo; Wilfert, Thomas; and Kammerer, Werner, 4,299,124, Cl. 73-204.000.
Wm. B. Reily & Company, Inc.: *See*—
Zirbel, Richard, 4,299,856, Cl. 426-573.000.
Williams, Arthur R., to Dunlop Limited. Tires. 4,299,264, Cl. 152-209.00R.
Williams, Don W., to H & M Distributors, Inc. Automatic vent damper and fuel valve control. 4,299,554, Cl. 431-16.000.
Williams, John A.: *See*—
Mills, Alfred L.; Reekie, John; and Williams, John A., 4,299,271, Cl. 165-47.000.
Williams, Luther M. Axial impact tool. 4,299,021, Cl. 29-432.000.
Williams, Meurig W.; and AuClair, Christoper J., to Xerox Corporation. Positively charged toners containing quaternary ammonium salts attached to acrylate polymers. 4,299,898, Cl. 430-106.000.
Williams, Paul C.: *See*—
Stock, Arthur J.; and Williams, Paul C., 4,299,722, Cl. 252-628.000.
Wilson, Jeffrey V.; and Tucker, Leroy W., to United States of America, Navy. Underwater-mateable electrical connector. 4,299,431, Cl. 339-60.00R.
Wilson, John W. Furnace and heat storage assembly. 4,299,178, Cl. 110-234.000.
Wilson, Keith C.: *See*—
Candlin, John P.; Wilson, Keith C.; and Pearce, Ronald, 4,299,936, Cl. 526-119.000.
Wilson, Stephen H. Animated device. 4,299,041, Cl. 40-124.100.
Wilson, Walter M.: *See*—
Cronin, John C.; and Wilson, Walter M., 4,300,028, Cl. 200-153.00R.
Wiltron Company: *See*—
Wever, Ruben; and Moyles, Daniel C., 4,300,024, Cl. 179-175.20A.
Wilzbach, Bernard L., to International Business Machines Corporation. Component mounting apparatus useful for compact copiers. 4,299,474, Cl. 355-3.0DR.
Winkler, Clifford W. Infinitely adjustable bracket-standard mounting. 4,299,368, Cl. 248-246.000.
Wiremold Company, The: *See*—
Kelly, Walter F., 4,299,641, Cl. 156-143.000.

Wissner, Adolf; Hauser, Werner; Bitners, Feliks; and Wambach, Raimund, to Bayer Aktiengesellschaft. Process for the preparation of dichlorobenzenes. 4,300,004, Cl. 570-211.000.
Wissner, Allan, to American Cyanamid Company. 1-Hydroxymethyl-1-oxo-prostane derivatives of the E series. 4,299,988, Cl. 568-379.000.
Withers, John A.; Sykes, Alec; and Brogan, Stephen M., to David Brown Tractors Limited. Tractor ballast weight assemblies. 4,299,405, Cl. 280-759.000.
Witman, Mark W., to Mobay Chemical Corporation. Impact modified polycarbonates. 4,299,928, Cl. 525-67.000.
Witte, Hans H.: *See*—
Aulich, Hubert; Auracher, Franz; and Witte, Hans H., 4,299,609, Cl. 65-3.130.
Wittman, Gary R.: *See*—
Miguel, Anthony S.; Perry, John L.; and Wittman, Gary R., 4,299,872, Cl. 428-117.000.
Wochnowski, Waldemar, to Hauni-Werke Korber & Co. KG. Method and apparatus for ascertaining the bulk weight of tobacco or the like. 4,300,201, Cl. 364-567.000.
Woerz, Stephen E., to Boise Cascade Corporation. Composite container including a reversely curled body member. 4,299,350, Cl. 229-5.500.
Wokeck, Glenn F., to Bangor Plastics, Inc. Corn popper. 4,299,160, Cl. 99-323.500.
Wolfe, Donald L.: *See*—
Meuschke, Robert E.; and Wolfe, Donald L., 4,299,658, Cl. 250-506.000.
Womack, Robert C., to AAA Products International, Inc. Rotary tool with axial feed. 4,299,294, Cl. 173-148.000.
Wong, Thomas M.: *See*—
Wang, Yu-chang J.; and Wong, Thomas M., 4,299,828, Cl. 424-238.000.
Wood, Kenneth H., to Moxham Industrial Pty. Ltd. Buckle for safety belts. 4,299,014, Cl. 24-197.000.
Woodhull, William M. Wind power conversion and control system. 4,299,198, Cl. 126-247.000.
Wooff, Edward A., Jr.: *See*—
Miller, Frederick A.; and Wooff, Edward A., Jr., 4,300,167, Cl. 338-210.000.
Wootton, Gordon: *See*—
Cassidy, Frederick; and Wootton, Gordon, 4,299,970, Cl. 560-39.000.
World Medical Marketing Corporation: *See*—
Hofstein, Steven R., 4,299,206, Cl. 128-25.00B.
Wright, William B., Jr.: *See*—
McEvoy, Francis J.; Wright, William B., Jr.; Birnberg, Gary H.; and Albright, Jay D., 4,299,769, Cl. 260-326.350.
Wuhl, Helmut: *See*—
Dietrich, Manfred; Wuhl, Helmut; Fitzer, Erich; Brennfleck, Karl; and Kehr, Dietrich, 4,299,861, Cl. 427-62.000.
Wunderlich, Klaus: *See*—
Bien, Hans-Samuel; Beinert, Werner; and Wunderlich, Klaus, 4,299,966, Cl. 549-52.000.
Wurlitzer Company, The: *See*—
Hoskinson, William R.; and Carley, Joseph C., 4,299,153, Cl. 84-1.100.
Wurst, William C.; Mercer, William R.; and Brodeur, Lester R., to Sanders Associates, Inc. Loran-C navigation apparatus. 4,300,139, Cl. 343-103.000.
Wyler AG: *See*—
Stauber, Siegfried, 4,299,035, Cl. 33-386.000.
Wyman-Gordon Company: *See*—
Jain, Sulekh C.; and Forkey, Paul W., 4,299,338, Cl. 222-152.000.
Wyoming Mineral Corporation: *See*—
Stana, Regis R., 4,299,724, Cl. 252-348.000.
Xerox Corporation: *See*—
AuClair, Christopher J.; and Lu, Chin H., 4,299,903, Cl. 430-137.000.
Azar, Jack C.; and Wellman, Russel E., 4,299,899, Cl. 430-108.000.
Benz, Bernard D.; Carlin, Edward M., Jr.; and Gross, Thomas D., 4,299,504, Cl. 400-208.000.
Huggins, Raymond W., 4,299,901, Cl. 430-122.000.
Knodt, Ruediger W.; Charland, Terrence D.; Hull, Charles J.; Hutton, James E.; Webb, John L.; and Yonovich, John R., 4,299,478, Cl. 355-3.00R.
Martin, Trevor I.; and Lennon, John M., 4,299,983, Cl. 564-394.000.
Smith, Richard E., 4,299,381, Cl. 271-96.000.
Stolka, Milan; Yanus, John F.; Pai, Damodar M.; Renfer, Dale S.; and Pearson, James M., 4,299,897, Cl. 430-59.000.
Ward, Joseph W.; and Schroeder, Russell G., II, 4,299,477, Cl. 355-14.00R.
Williams, Meurig W.; and AuClair, Christoper J., 4,299,898, Cl. 430-106.000.
Xicor, Inc.: *See*—
Simko, Richard T., 4,300,212, Cl. 365-185.000.
Yahalom, Joseph, to Bell Telephone Laboratories, Incorporated. Palladium plating procedure and bath. 4,299,670, Cl. 204-29.000.
Yamamoto, Ryuichi; Hirai, Yutaka; Takagi, Akinobu; and Tashima, Zyunzi, to Mitsui Toatsu Chemicals, Inc. Process for preparing alicyclic isocyanates. 4,299,766, Cl. 260-239.30R.
Yamamoto, Toshie: *See*—
Takeyama, Tetsu; Azuma, Kenkoku; Ikeda, Akira; Yamamoto, Toshie; and Katsurada, Shigeho, 4,299,599, Cl. 55-180.000.
Yamamoto, Yasuhiro: *See*—
Ito, Yasuro; Higuchi, Yoshiro; Mochida, Yutaka; Kemmochi, Sampei; Kaga, Hideharu; and Yamamoto, Yasuhiro, 4,299,633, Cl. 106-97.000.
Yamamuro, Hiroshi: *See*—
Sawakata, Akira; Yamamuro, Hiroshi; and Kobayashi, Syouzou, 4,299,495, Cl. 356-442.000.
Yamanaka, Minoru, to Sisin Seiki Kabushiki Kaisha. Solenoid valve. 4,299,374, Cl. 251-129.000.
Yamane, Yoichi; Kamata, Tutomu; Ohonaka, Hiromu; and Takase, Mituo, to Hitachi, Ltd. Guide vane protecting device. 4,299,534, Cl. 415-9.000.
Yamasaki, Yasuo; Sakai, Tokuji; Onodera, Tamio; and Sumitani, Kiji, to Teijin Petrochemical Industries Ltd. Process for isomerization of xylene. 4,300,014, Cl. 585-481.000.
Yamashita, Koji; and Oyamada, Takashi, to Nippon Electric Co., Ltd. Mount for portable radio communication unit. 4,299,344, Cl. 224-242.000.
Yamazaki, Hiroshi: *See*—
Isayama, Takuro; Yamazaki, Hiroshi; Komai, Hiromichi; and Sato, Tsutomu, 4,300,144, Cl. 346-140.00R.
Yanagi, Yoshio: *See*—
Shibatani, Haruo; Ogomori, Yuji; Kameda, Takashi; and Yanagi, Yoshio, 4,300,002, Cl. 568-817.000.
Yanus, John F.: *See*—
Stolka, Milan; Yanus, John F.; Pai, Damodar M.; Renfer, Dale S.; and Pearson, James M., 4,299,897, Cl. 430-59.000.
Yara Engineering Corporation: *See*—
Angel, Brian R.; and Bradshaw, Robert W., 4,299,807, Cl. 423-327.000.
Yarnykh, Vladimir S.: *See*—
Polyakov, Anisim A.; Yarnykh, Vladimir S.; Smirnov, Anatoly M.; Simetsky, Mark A.; Kudryavtsev, Evgeny A.; Talanov, German A.; Zakomyrdin, Alexandr A.; Rudenko, Boris N.; Rakhmanin, Pavel P.; and Guschin, Vyacheslav N., 4,299,816, Cl. 424-45.000.
Yasuda, Atsushi: *See*—
Maeda, Akio; Usui, Tatuo; and Yasuda, Atsushi, 4,299,944, Cl. 528-89.000.
Yasuda, Shigeo: *See*—
Matsuda, Akira; Goshima, Norio; Yasuda, Shigeo; Iwasaki, Motoaki; and Nishino, Hiroshi, 4,300,118, Cl. 340-58.000.
Yasuda, Takeo: *See*—
Obana, Haruo; Shirakawa, Tadashi; Hikuma, Motohiko; Yasuda, Takeo; Karube, Isao; and Suzuki, Shuichi, 4,299,669, Cl. 204-1.00T.
Yasui, Tokumasa: *See*—
Tanimura, Nobuyoshi; Fukuta, Hiroshi; Nishimura, Kotaro; and Yasui, Tokumasa, 4,300,213, Cl. 365-190.000.
Yates, August Betts: *See*—
Webb, J. Talmadge, 4,299,361, Cl. 244-224.000.
Yates, Jan B.; and Bartilson, Benjamin M., to Eastern Company, The. Rock reinforcement system. 4,299,515, Cl. 405-259.000.
Yello, Joseph F., to Zenith Radio Corporation. Raster-centering circuit for multiple raster CRT systems. 4,300,076, Cl. 315-398.000.
Yim, Nelson C.: *See*—
Huffman, William F.; and Yim, Nelson C., 4,299,969, Cl. 560-9.000.
Yogosawa, Fumio, to Sankin Kogyo Kabushiki Kaisha. Occludator. 4,299,570, Cl. 433-62.000.
Yoknis, Myron; and Waite, James B., to Teledyne Industries, Inc. Thermostat. 4,300,199, Cl. 364-557.000.
Yokogawa Electric Works, Ltd.: *See*—
Ueda, Toshitsugu; and Kousaka, Fusao, 4,299,122, Cl. 73-862.590.
Yokota, Kouji: *See*—
Fujitani, Yoshiyasu; Muraki, Hideaki; Kondoh, Shiroh; Tomita, Makoto; Yokota, Kouji; and Sobukawa, Hideo, 4,299,734, Cl. 252-462.000.
Yokoyama, Kaneo: *See*—
Takeshita, Akira; Yokoyama, Kaneo; and Hattori, Makoto, 4,299,771, Cl. 260-378.000.
Yonovich, John R.: *See*—
Knodt, Ruediger W.; Charland, Terrence D.; Hull, Charles J.; Hutton, James E.; Webb, John L.; and Yonovich, John R., 4,299,478, Cl. 355-3.00R.
Yoshida Kogyo, K.K.: *See*—
Yoshieda, Keiichi; and Kuse, Kazuki, 4,299,027, Cl. 29-766.000.
Yoshida, Yoshiaki: *See*—
Seiki, Kazuo; Katoh, Takashi; and Yoshida, Yoshiaki, 4,299,084, Cl. 57-58.890.
Yoshieda, Keiichi; and Kuse, Kazuki, to Yoshida Kogyo, K.K. Apparatus for applying reinforcing film pieces to a pair of slide fastener stringers. 4,299,027, Cl. 29-766.000.
Yoshii, Isamu: *See*—
Kimira, Hiroshi; Abiko, Kenji; Sato, Takashi; Yoshii, Isamu; Watanabe, Sadao; and Takei, Yutaka, 4,299,622, Cl. 75-124.000.
Yoshiike, Yoshiji: *See*—
Baba, Masaharu; Honda, Kiyokazu; Yoshiike, Yoshiji; and Hashima, Akiyoshi, 4,299,430, Cl. 339-17.00D.
Yoshino Kogyosho Co., Ltd.: *See*—
Suzuki, Sadao; Ichizawa, Yoshiyuki; and Seki, Nobuichi, 4,299,549, Cl. 425-214.000.
Young, Alastair J.: *See*—
Parsons, David; Taylor, Maurice; and Young, Alastair J., 4,299,314, Cl. 192-12.00C.
Young, Ian R.: *See*—
Harrison, Colin G.; and Young, Ian R., 4,300,096, Cl. 324-309.000.

Young, John M., to American Optical Corporation. Spectacles lens-frame fitting coordinator. 4,299,032, Cl. 33-174.00A.
Young, Robert G.: *See*—
  Skwirut, Henry; Young, Robert G.; and Morton, Edward W., 4,300,073, Cl. 315-53.000.
Youssef, Kamal A. Prolonged incubation microbiological apparatus and filter gaskets thereof. 4,299,921, Cl. 435-298.000.
Yn, Ruey J., to General Motors Corporation. Signal programmable multiple function flip-flop. 4,300,060, Cl. 307-272.00A.
Yuasa, Sueto. Tennis training device. 4,299,383, Cl. 273-29.00A.
Yugenkaisha Nakaya Nokogirikikai Seisakusho: *See*—
  Nanba, Taro, 4,299,143, Cl. 76-43.000.
Yuuzu, Takayoshi: *See*—
  Niu, Tokihide; Yuuzu, Takayoshi; Abe, Ikuzo; and Shigematsu, Koichi, 4,300,032, Cl. 219-10.55B.
Zahid, Abduz, to Greer Hydraulics, Incorporated. Pressure accumulator having a long life distensible bladder. 4,299,254, Cl. 138-30.000.
Zahn, Detlef: *See*—
  Dix, Ernst; Muller, Gerhard; Notzel, Hans; Walther, Willy; and Zahn, Detlef, 4,299,170, Cl. 102-355.000.
Zaidan Hojin Handotai Kenkyu Shinkokai: *See*—
  Nishizawa, Jun-ichi, 4,300,151, Cl. 357-24.000.
Zakomyrdin, Alexandr A.: *See*—
  Polyakov, Anisim A.; Yarnykh, Vladimir S.; Smirnov, Anatoly M.; Simetsky, Mark A.; Kudryavtsev, Evgeny A.; Talanov, German A.; Zakomyrdin, Alexandr A.; Rudenko, Boris N.; Rakhmanin, Pavel P.; and Guschin, Vyacheslav N., 4,299,816, Cl. 424-45.000.
Zenith Radio Corporation: *See*—
  DeFranco, Thomas P.; and Marino, Armando V., 4,299,016, Cl. 29-25.110.
  Dougherty, Lawrence W.; and Palac, Kazimir, 4,300,071, Cl. 313-407.000.
  Engel, Christopher M., 4,300,154, Cl. 358-23.000.
  Midland, Richard W., 4,300,157, Cl. 358-74.000.
  Yello, Joseph F., 4,300,076, Cl. 315-398.000.
Zhitkov, Vladimir V.: *See*—
  Azbukin, Vladimir G.; Balandin, Jury F.; Gorynin, Igor V.; Gluskin, Lev Y.; Zvezdin, Jury I.; Ignatenko, Alexandr G.; Krasnov, Alexandr N.; Melekhov, Rostislav K.; Osipova, Inna S.; Pavlov, Valery N.; Khokhlov, Alexandr A.; Stepanov, Ivan A.; Anfimov, Alexandr F.; Ardentov, Vasily V.; Burmakin, Viktor M.; Ignatov, Viktor A.; Rokhlin, Eduard A.; and Zhitkov, Vladimir V., 4,299,623, Cl. 75-128.00R.
Zilianti, Mario. Bipolar electrodes for fetal heart-rate recording during labor. 4,299,232, Cl. 128-642.000.
Zinser Textilmaschinen GmbH, Firma: *See*—
  Igel, Wolfgang; Freibichler, Franz; Fehr, Werner; and Pfeifer, Willi, 4,299,083, Cl. 57-18.000.
Zirbel, Richard, to Wm. B. Reily & Company, Inc. Method for preparing a suspension salad dressing or juice product. 4,299,856, Cl. 426-573.000.
Zitz, Alfred: *See*—
  Siebenhofer, Gottfried; Suessenbeck, Heinrich; and Zitz, Alfred, 4,299,517, Cl. 405-296.000.
Zvezdin, Jury I.: *See*—
  Azbukin, Vladimir G.; Balandin, Jury F.; Gorynin, Igor V.; Gluskin, Lev Y.; Zvezdin, Jury I.; Ignatenko, Alexandr G.; Krasnov, Alexandr N.; Melekhov, Rostislav K.; Osipova, Inna S.; Pavlov, Valery N.; Khokhlov, Alexandr A.; Stepanov, Ivan A.; Anfimov, Alexandr F.; Ardentov, Vasily V.; Burmakin, Viktor M.; Ignatov, Viktor A.; Rokhlin, Eduard A.; and Zhitkov, Vladimir V., 4,299,623, Cl. 75-128.00R.

LIST OF REISSUE PATENTEES

TO WHOM

PATENTS WERE ISSUED ON THE 10TH DAY OF NOVEMBER, 1981

NOTE.—Arranged in accordance with the first significant character or word of the name (in accordance with city and telephone directory practice).

Dunkers, Karl R. Apparatus for water treatment. Re. 30,793, Cl. 210-522.000.
Du Pont de Nemours, E. I., and Company: *See*—
  Schmidt, Gunter, Re. 30,792, Cl. 206-455.000.
Kupcikevicius, Vytautas, to Union Carbide Corporation. Cantilevered belted bag loading apparatus. Re. 30,791, Cl. 198-341.000.
Lewis, David S., to Zeller Corporation, The. Universal joint lubrication. Re. 30,790, Cl. 64-17.00A.
Schmidt, Gunter, to Du Pont de Nemours, E. I., and Company. X-ray film package. Re. 30,792, Cl. 206-455.000.
Uninn Carbide Corporatinn: *See*—
  Kupcikevicius, Vytautas, Re. 30,791, Cl. 198-341.000.
Zeller Corporation, The: *See*—
  Lewis, David S., Re. 30,790, Cl. 64-17.00A.

LIST OF DESIGN PATENTEES

A & H Mfg. Co.: *See*—
  Feibelman, Jeffrey A., 261,729, Cl. D9-457.000.
AB Dentatus: *See*—
  Edwardson, Svante R., 261,805, Cl. D24-10.000.
Acme Engineering & Manufacturing Corporation: *See*—
  Bohanon, Hoy R., Jr., 261,803, Cl. D23-163.000.
Alger, Andrew L. Water closet. 261,799, 11-10-81, Cl. D23-65.000.
Allen, George C. Football kicking tee. 261,789, 11-10-81, Cl. D21-209.000.
Allibert Exploitation Societe Anonyme: *See*—
  Deconinck, Didier, 261,800, Cl. D23-71.000.
Ament, Donald S.; and Ament, Duane S., to Miracle Recreation Equipment Company. Playground teeter-totter. 261,792, 11-10-81, Cl. D21-251.000.
Ament, Duane S.: *See*—
  Ament, Donald S.; and Ament, Duane S., 261,792, Cl. D21-251.000.
American Standard Inc.: *See*—
  Kaiser, Jack N., 261,797, Cl. D23-51.000.
  Stairs, Henry M., Jr., 261,798, Cl. D23-58.000.
American Thermometer Co., Inc.: *See*—
  Hultquist, William T., 261,737, Cl. D10-57.000.
Aoko, Toshie: *See*—
  Takimoto, Tetsuro; Mohri, Motoya; Wada, Kiyoshi; Uchiyama, Rikio; Nishigaki, Koichi; and Aoko, Toshie, 261,767, Cl. D14-81.000.
Arnsteiner, Anton, to Blizzard Gesellschaft m.b.H. Ski. 261,790, 11-10-81, Cl. D21-229.000.
Audesse, Emery G.; and Hartman, Donald W., to GTE Products Corporation. Linear multilamp phntoflash unit. 261,811, 11-10-81, Cl. D26-02.000.
Autotronics, Inc.: *See*—
  Wunderlich, Robert J., 261,757, Cl. D13-30.000.
Baisch, Herbert: *See*—
  Ferdinand, Irwin J.; Sylvan, Richard; and Baisch, Herbert, 261,712, Cl. D6-178.000.
Bako, Lazlo, to Presto Lock Company, Division of Walter Kidde & Company, Inc. Handle stud for luggage or the like. 261,724, 11-10-81, Cl. D8-321.000.
Bechtel, Daniel L. Rifle pedestal-for shooting ranges and the like. 261,794, 11-10-81, Cl. D22-7.000.
Berzack, Richard S. Holder for condiment containers. 261,716, 11-10-81, Cl. D7-52.000.
Bick, Michael A., to Shelly & Anderson Furniture Mfg. Co., Inc. Sofa. 261,706, 11-10-81, Cl. D6-63.000.
Blankenship, Arthur C.; and Maxemovich, Marco, to Uniroyal, Inc. Pneumatic tire tread and buttress. 261,753, 11-10-81, Cl. D12-147.000.
Blizzard Gesellschaft m.b.H.: *See*—
  Arnsteiner, Anton, 261,790, Cl. D21-229.000.
Bohanon, Hoy R., Jr., to Acme Engineering & Manufacturing Corporation. Housing for a ventilating fan. 261,803, 11-10-81, Cl. D23-163.000.
Bowles, Thurman A.; and Newgard, Jon M., to General Electric Company. Lamp. 261,812, 11-10-81, Cl. D26-2.000.
Boyajian, William M. Plant support. 261,744, 11-10-81, Cl. D6-135.000.
Brazis, William E., to Rubbermaid Incorporated. Step-on wastebasket. 261,720, 11-10-81, Cl. D34-9.000.
Breneman, Jack L., to Quaker Oats Company, The. Toy bulldozer. 261,787, 11-10-81, Cl. D21-132.000.
Burns, Harry. Frame for barbell or the like. 261,788, 11-10-81, Cl. D21-197.000.
Carbajales Santa Eulalia, Javier B.: *See*—
  Carbajales Santa Eulalia, Jesus A.; and Carbajales Santa Eulalia, Javier B., 261,747, Cl. D11-158.000.
Carbajales Santa Eulalia, Jesus A.; and Carbajales Santa Eulalia, Javier B., to John J. Madison Company, Inc. Figurine of a collie. 261,747, 11-10-81, Cl. D11-158.000.
Castagna, John F.; and Emmerling, Ronald A., to Sparkomatic Corporation. Control unit for a combined automobile cassette player, radio and digital clock. 261,758, 11-10-81, Cl. D14-10.000.
Chambers, Richard F. Asphalt plant control house. 261,809, 11-10-81, Cl. D25-22.000.
Christian Dior, S.A.: *See*—
  Spreter, Pierre, 261,814, Cl. D27-36.000.
Clairol Incorporated: *See*—
  Kretschmer, Horst J., 261,817, Cl. D28-67.000.
Combi Co., Ltd.: *See*—
  Nakao, Shinroku; Ishii, Yoshiyasu; and Matsumoto, Susumu, 261,783, Cl. D21-63.000.
  Nakao, Shinroku; Ishii, Yoshiyasu; and Ishii, Kenshun, 261,785, Cl. D21-108.000.
Curatolo, Frank. Desk. 261,713, 11-10-81, Cl. D6-181.000.
Daenen, Robert H. C. M., to Dart Industries Inc. Dish or the like. 261,715, 11-10-81, Cl. D7-1.000.
Dambach Templin GmbH: *See*—
  Templin, Werner, 261,774, Cl. D18-24.000.
Dart Industries Inc.: *See*—
  Daenen, Robert H. C. M., 261,715, Cl. D7-1.000.
Deconinck, Didier, to Allibert Exploitation Societe Anonyme. Combined toilet seat and cover. 261,800, 11-10-81, Cl. D23-71.000.
deHaseth, John, to Jonee, Inc. Eyelash curler. 261,816, 11-10-81, Cl. D28-36.000.
Detection Systems, Inc.: *See*—
  Lederer, David B., 261,740, Cl. D10-106.000.
Digital Equipment Corporation: *See*—
  Urbanus, David S.; and Hanson, Robert L., 261,762, Cl. D14-100.000.
Dixson, Inc.: *See*—
  Shumway, DeWayne J., 261,738, Cl. D10-80.000.
Dlugoś, Daniel F., to Pitney Bowes Inc. Electronic postal rate memory. 261,760, 11-10-81, Cl. D14-114.000.
Drew, William D.: *See*—
  Foster, Leslie D.; Gallant, Dennis J.; Drew, William D.; and Lobrey, Cecil R., 261,804, Cl. D24-1.100.
Eaves, Thomas J. Mixing valve indexed decal. 261,777, 11-10-81, Cl. D20-11.000.
Edwardson, Svante R., to AB Dentatus. Articulator for artificial dentures. 261,805, 11-10-81, Cl. D24-10.000.
Emerson Electric Co.: *See*—
  Leibson, Abraham, 261,739, Cl. D10-96.000.
Emmerling, Ronald A.: *See*—
  Castagna, John F.; and Emmerling, Ronald A., 261,758, Cl. D14-10.000.
Enrichment Reading Corporation of Amerca: *See*—
  Wendt, David W., 261,776, Cl. D19-60.000.
Envoys U.S.A., Inc.: *See*—
  Gamm, Robert J., 261,695, Cl. D2-309.000.
Esselte Meto International GmbH: *See*—
  Wippern, Gerhard, 261,778, Cl. D20-27.000.
Essig, Richard N., to Plastigage Corporation. Strain insulator with watersheds. 261,756, 11-10-81, Cl. D13-18.000.
Feibelman, Jeffrey A., to A & H Mfg. Co. Pendant display card. 261,729, 11-10-81, Cl. D9-457.000.
Ferdinand, Irwin J.; Sylvan, Richard; and Baisch, Herbert, to Hirsh Company. Table or similar article. 261,712, 11-10-81, Cl. D6-178.000.
Ferguson, Robert W. Tent. 261,793, 11-10-81, Cl. D21-253.000.
Fisher, Robert C., to Quaker Oats Company, The. Riding toy. 261,784, 11-10-81, Cl. D21-78.000.

Florists' Transworld Delivery Association: *See*—
  Harshman, Arthur L.; and Waterfield, Martin J., 261,746, Cl. D11-146.000.
Ford, Harry R.; and Hirakawa, Koichi, to Formica Corporation. Decorative laminate sheet. 261,819, 11-10-81, Cl. D92-1.00R.
Formica Corporation: *See*—
  Ford, Harry R.; and Hirakawa, Koichi, 261,819, Cl. D92-1.00R.
Foster, Leslie D.; Gallant, Dennis J.; Drew, William D.; and Lohrey, Cecil R., to Hill-Rom Company, Inc. Columnar patient care service facility. 261,804, 11-10-81, Cl. D24-1.100.
Gallant, Dennis J.: *See*—
  Foster, Leslie D.; Gallant, Dennis J.; Drew, William D.; and Lohrey, Cecil R., 261,804, Cl. D24-1.100.
Galappo, James. Holder for hair dryer blowers. 261,818, 11-10-81, Cl. D28-73.000.
Gamm, Robert J., to Envoys U.S.A., Inc. Athletic shoe with pocket. 261,695, 11-10-81, Cl. D2-309.000.
General Electric Company: *See*—
  Bowles, Thurman A.; and Newgard, Jon M., 261,812, Cl. D26-2.000.
  Klucznik, Paul J.; and Kainass, Andrew, 261,764, Cl. D14-68.000.
Gibiec, Oswald, to Vorwerk & Co. Elektr Werke KG. Mixer-cooker kitchen machine. 261,719, 11-10-81, Cl. D7-159.000.
Gordy International Incorporated: *See*—
  Steinberg, Alan M., 261,786, Cl. D10-110.000.
Gosline, Scott P.; and Stembridge, William F. Bipolar temperature indicator. 261,736, 11-10-81, Cl. D10-57.000.
Grabner, Roy W.; McAleer, William J.; and Paul, Edward L., to Merck & Co., Inc. Cell scraping device. 261,807, 11-10-81, Cl. D24-28.000.
Grove Foods, Inc.: *See*—
  Perlmutter, R. Michel, 261,810, Cl. D25-26.000.
GTE Products Corporation: *See*—
  Audesse, Emery G.; and Hartman, Donald W., 261,811, Cl. D26-02.000.
Gurevitz, Bernard H. Picture frame. 261,714, 11-10-81. Cl. D6-232.000.
Haller, John L. Inward vented paint stirrer. 261,723, 11-10-81, Cl. D7-102.000.
Hampton, Auborn R. Golf club bag carrier. 261,749, 11-10-81, Cl. D34-15.000.
Hanson, Robert L.: *See*—
  Urbanus, David S.; and Hanson, Robert L., 261,762, Cl. D14-100.000.
Harrison, Marc S., to Omnichef, Inc. Machine for processing food. 261,718, 11-10-81, Cl. D7-153.000.
Harshman, Arthur L.; and Waterfield, Martin J., to Florists' Transworld Delivery Association. Bud vase. 261,746, 11-10-81, Cl. D11-146.000.
Hartman, Arlin P. Pivoting wall bracket. 261,709, 11-10-81, Cl. D6-114.000.
Hartman, Donald W.: *See*—
  Audesse, Emery G.; and Hartman, Donald W., 261,811, Cl. D26-02.000.
Hata, Kazuyuki, to Pioneer Kabushiki Kaisha. Loudspeaker. 261,759, 11-10-81, Cl. D14-30.000.
Hayashi, Shigeaki: *See*—
  Yamagami, Masafumi; Hayashi, Shigeaki; and Tatsugami, Harumi, 261,731, Cl. D10-30.000.
  Yamagami, Masafumi; Hayashi, Shigeaki; and Tatsugami, Harumi, 261,732, Cl. D10-30.000.
Heikel, Aslak R.; Kokki, Heikki; and Pattiniemi, Veikko, to Winter OY. Cover for color container in a tinting machine. 261,769, 11-10-81, Cl. D15-147.000.
Henry, Drake A.: *See*—
  Khula, John J.; and Henry, Drake A., 261,728, Cl. D9-418.000.
Hikawa, Koji, to Ricoh Company, Ltd. Electrostatic copier. 261,770, 11-10-81, Cl. D16-31.000.
Hill-Rom Company, Inc.: *See*—
  Foster, Leslie D.; Gallant, Dennis J.; Drew, William D.; and Lohrey, Cecil R., 261,804, Cl. D24-1.100.
Hirakawa, Koichi: *See*—
  Ford, Harry R.; and Hirakawa, Koichi, 261,819, Cl. D92-1.00R.
Hirsh Company: *See*—
  Ferdinand, Irwin J.; Sylvan, Richard; and Baisch, Herbert, 261,712, Cl. D6-178.000.
Honda Giken Kogoyo Kabushiki Kaisha: *See*—
  Iwakura, Masato, 261,752, Cl. D12-114.000.
Hultquist, William T., to American Thermometer Co., Inc. Thermochromic thermometer. 261,737, 11-10-81, Cl. D10-57.000.
Humble, John M. Belt attachable spray can holster. 261,698, 11-10-81, Cl. D2-400.000.
Hustler, Joseph W. Tail end comb. 261,815, 11-10-81, Cl. D28-30.000.
Hutting, Richard: *See*—
  Ingber, Jack F.; and Hutting, Richard, 261,761, Cl. D14-101.000.
Hyams, Colin H., to Roco Wheels Limited. Vehicle wheel. 261,755, 11-10-81, Cl. D12-205.000.
Ichikawa, Shinpei; and Lawrence, William J., to Texas Instruments Incorporated. Design for a handheld calculator. 261,773, 11-10-81, Cl. D18-7.000.
Iida, Kaoru, to Kabushiki Kaisha Suwa Seikosha. Wristwatch. 261,733, 11-10-81, Cl. D10-39.000.
Ingber, Jack F.; and Hutting, Richard, to Systems Consultants, Inc. Data terminal/acoustic coupler. 261,761, 11-10-81, Cl. D14-101.000.
Ishii, Kenshun: *See*—
  Nakao, Shinroku; Ishii, Yoshiyasu; and Ishii, Kenshun, 261,785, Cl. D21-108.000.
Ishii, Yoshiyasu: *See*—
  Nakao, Shinroku; Ishii, Yoshiyasu; and Matsumoto, Susumu, 261,783, Cl. D21-63.000.
  Nakao, Shinroku; Ishii, Yoshiyasu; and Ishii, Kenshun, 261,785, Cl. D21-108.000.
Iwakura, Masato, to Honda Giken Kogoyo Kabushiki Kaisha. Motorcycle instrument cluster. 261,752, 11-10-81, Cl. D12-114.000.
Jobbins, Howell S., Jr., to Universal Optical Company, Inc. Eye glass frame. 261,771, 11-10-81, Cl. D16-116.000.
John H. Best and Sons, Inc.: *See*—
  Ovitz, Ernest G., III, 261,701, Cl. D6-20.000.
John J. Madison Company, Inc.: *See*—
  Carbajales Santa Eulalia, Jesus A.; and Carbajales Santa Eulalia, Javier B., 261,747, Cl. D11-158.000.
Johnson, William H., to Shenandoah Manufacturing Co., Inc. Pathological waste incinerator with counterbalanced access door and lower stack section. 261,801, 11-10-81, Cl. D23-85.000.
Jonee, Inc.: *See*—
  deHaseth, John, 261,816, Cl. D28-36.000.
Julsen, George E. Accessory for a belt. 261,795, 11-10-81, Cl. D22-14.000.
Kabushiki Kaisha Daini Seikosha: *See*—
  Onodera, Tsuyoshi, 261,734, Cl. D10-39.000.
Kabushiki Kaisha Suwa Seikosha: *See*—
  Iida, Kaoru, 261,733, Cl. D10-39.000.
Kainass, Andrew: *See*—
  Klucznik, Paul J.; and Kainass, Andrew, 261,764, Cl. D14-68.000.
Kaiser, Jack N., to American Standard Inc. Bidet or similar article. 261,797, 11-10-81, Cl. D23-51.000.
Keltner, Raymond O. Game board. 261,781, 11-10-81, Cl. D21-23.000.
Khula, John J.; and Henry, Drake A. Packaging box or similar article. 261,728, 11-10-81, Cl. D9-418.000.
Kido, Katsutoshi: *See*—
  Miyanaga, Setsuo; and Kido, Katsutoshi, 261,766, Cl. D14-73.000.
Klucznik, Paul J.; and Kainass, Andrew, to General Electric Company. Hand held transceiver or similar article. 261,764, 11-10-81, Cl. D14-68.000.
Kokki, Heikki: *See*—
  Heikel, Aslak R.; Kokki, Heikki; and Pattiniemi, Veikko, 261,769, Cl. D15-147.000.
Kretschmer, Horst J., to Clairol Incorporated. Make-up mirror. 261,817, 11-10-81, Cl. D28-67.000.
Land, Barry R.; and Proctor, Virginia L. Lounge or similar article. 261,705, 11-10-81, Cl. D6-38.000.
Lawrence, William J.: *See*—
  Ichikawa, Shinpei; and Lawrence, William J., 261,773, Cl. D18-7.000.
Lederer, David B., to Detection Systems, Inc. Intruder detector housing. 261,740, 11-10-81, Cl. D10-106.000.
Leibson, Abraham, to Emerson Electric Co. Flow meter. 261,739, 11-10-81, Cl. D10-96.000.
Ligrano, Ronald, to Thunderfoot Engineering. Speaker stand. 261,708, 11-10-81, Cl. D6-85.000.
Linville, Creath Q. Clock. 261,730, 11-10-81, Cl. D10-12.000.
Little, Paul V. Jewelry clip or the like. 261,743, 11-10-81, Cl. D11-87.000.
Lohrey, Cecil R.: *See*—
  Foster, Leslie D.; Gallant, Dennis J.; Drew, William D.; and Lohrey, Cecil R., 261,804, Cl. D24-1.100.
Lovejoy, Robert B., to Mattel, Inc. Hockey game display and control panel or similar article. 261,779, 11-10-81, Cl. D21-13.000.
M.P.H. Industries, Inc.: *See*—
  Sergent, Edward W., 261,735, Cl. D10-46.000.
Marigomez, Concepcion. Glove. 261,697, 11-10-81, Cl. D2-360.000.
Matsumoto, Susumu: *See*—
  Nakao, Shinroku; Ishii, Yoshiyasu; and Matsumoto, Susumu, 261,783, Cl. D21-63.000.
Matsushita Electric Industrial Co., Ltd.: *See*—
  Mishiro, Benito; and Okada, Takao, 261,765, Cl. D14-73.000.
  Miyanaga, Setsuo; and Kido, Katsutoshi, 261,766, Cl. D14-73.000.
Mattel, Inc.: *See*—
  Lovejoy, Robert B., 261,779, Cl. D21-13.000.
Maxemovich, Marco: *See*—
  Blankenship, Arthur C.; and Maxemovich, Marco, 261,753, Cl. D12-147.000.
Mayer, Gloria G.: *See*—
  Mayer, Thomas R.; and Mayer, Gloria G., 261,748, Cl. D12-11.000.
Mayer, Thomas R.; and Mayer, Gloria G. Snow push cart. 261,748, 11-10-81, Cl. D12-11.000.
McAleer, William J.: *See*—
  Grabner, Roy W.; McAleer, William J.; and Paul, Edward L., 261,807, Cl. D24-28.000.
McMullan, Robert G., to SCM (Canada) Limited. Tear strip packaging container. 261,727, 11-10-81, Cl. D9-416.000.
McTighe, William J.; and Schaer, Wolfgang. Pendant. 261,742, 11-10-81, Cl. D11-56.000.
Mears, K. D. Stand for a guitar. 261,707, 11-10-81, Cl. D6-85.000.
Megna, Salvatore J. Brush handle. 261,700, 11-10-81, Cl. D4-31.000.
Merck & Co., Inc.: *See*—
  Grabner, Roy W.; McAleer, William J.; and Paul, Edward L., 261,807, Cl. D24-28.000.
Metz, David F. Antenna base. 261,768, 11-10-81, Cl. D14-91.000.
Meurer, Charles L. Tiered circular fluid treatment module. 261,802, 11-10-81, Cl. D24-99.000.

Miller, John F. Four wheel tandem trolley. 261,750, 11-10-81, Cl. D34-33.000.
Miracle Recreation Equipment Company: *See*—
  Ament, Donald S.; and Ament, Duane S., 261,792, Cl. D21-251.000.
Mishiro, Benito; and Okada, Takao, to Matsushita Electric Industrial Co., Ltd. Digital clock radio. 261,765, 11-10-81, Cl. D14-73.000.
Miyanaga, Setsuo; and Kido, Katsutoshi, to Matsushita Electric Industrial Co., Ltd. Digital clock radio. 261,766, 11-10-81, Cl. D14-73.000.
Mohri, Motoya: *See*—
  Takimoto, Tetsuro; Mohri, Motoya; Wada, Kiyoshi; Uchiyama, Rikio; Nishigaki, Koichi; and Aoko, Toshie, 261,767, Cl. D14-81.000.
Mont, Howard I., to Teacrest Corporation, The. Canister. 261,717, 11-10-81, Cl. D7-79.000.
Muir, James H., to Video Turf Incorporated. Gaming machine. 261,782, 11-10-81, Cl. D21-37.000.
Mulvihill, Thomas, to Textron Inc. Rotatable display rack. 261,711, 11-10-81, Cl. D6-145.000.
Nakao, Shinroku; Ishii, Yoshiyasu; and Matsumoto, Susumu, to Combi Co., Ltd. Musical toy. 261,783, 11-10-81, Cl. D21-63.000.
Nakao, Shinroku; Ishii, Yoshiyasu; and Ishii, Kenshun, to Combi Co., Ltd. Toy block. 261,785, 11-10-81, Cl. D21-108.000.
Newgard, Jon M.: *See*—
  Bowles, Thurman A.; and Newgard, Jon M., 261,812, Cl. D26-2.000.
Nishigaki, Koichi: *See*—
  Takimoto, Tetsuro; Mohri, Motoya; Wada, Kiyoshi; Uchiyama, Rikio; Nishigaki, Koichi; and Aoko, Toshie, 261,767, Cl. D14-81.000.
Oerlemans, Donald E. Snow removal implement. 261,721, 11-10-81, Cl. D8-10.000.
Okada, Takao: *See*—
  Mishiro, Benito; and Okada, Takao, 261,765, Cl. D14-73.000.
Okamoto, Tadao. Prophylactic device. 261,808, 11-10-81, Cl. D24-99.000.
Omnichef, Inc.: *See*—
  Harrison, Marc S., 261,718, Cl. D7-153.000.
Onodera, Tsuyoshi, to Kabushiki Kaisha Daini Seikosha. Wristwatch. 261,734, 11-10-81, Cl. D10-39.000.
Onstead, Robert R. Check-out counter. 261,710, 11-10-81, Cl. D6-143.000.
Orsini, John T. Automobile. 261,751, 11-10-81, Cl. D12-92.000.
Ovitz, Ernest G., III, to John H. Best and Sons, Inc. Sample display stand. 261,701, 11-10-81, Cl. D6-20.000.
Parker, George E. Portable clothes hanger. 261,704, 11-10-81, Cl. D6-28.000.
Pattiniemi, Veikko: *See*—
  Heikel, Aslak R.; Kokki, Heikki; and Pattiniemi, Veikko, 261,769, Cl. D15-147.000.
Paul, Edward L.: *See*—
  Grabner, Roy W.; McAleer, William J.; and Paul, Edward L., 261,807, Cl. D24-28.000.
Perlmutter, R. Michel, to Grove Foods, Inc. Kiosk. 261,810, 11-10-81, Cl. D25-26.000.
Pioneer Kahushiki Kaisha: *See*—
  Hata, Kazuyuki, 261,759, Cl. D14-30.000.
Pitney Bowes Inc.: *See*—
  Dlugos, Daniel F., 261,760, Cl. D14-114.000.
Plastigage Corporation: *See*—
  Essig, Richard N., 261,756, Cl. D13-18.000.
Plummer, Richard L. Musical instrument and accessory stand. 261,703, 11-10-81, Cl. D6-28.000.
Presto Lock Company, Division of Walter Kidde & Company, Inc.: *See*—
  Bako, Lazlo, 261,724, Cl. D8-321.000.
  Stolarz, Edward M., 261,725, Cl. D8-321.000.
Proctor, Virginia L.: *See*—
  Land, Barry R.; and Proctor, Virginia L., 261,705, Cl. D6-38.000.
Quaker Oats Company, The: *See*—
  Breneman, Jack L., 261,787, Cl. D21-132.000.
  Fisher, Robert C., 261,784, Cl. D21-78.000.
  Wilkes, Kenneth R., 261,699, Cl. D3-73.000.
Queen, Carl J. Enclosure for a sit down shower bath. 261,796, 11-10-81, Cl. D23-48.000.
Radtke, Lee, to Tiger Electronic Toys, Inc. Electronic game housing. 261,780, 11-10-81, Cl. D21-13.000.
Ricoh Company, Ltd.: *See*—
  Hikawa, Koji, 261,770, Cl. D16-31.000.
Rocheleau, Ulric M. Oil filter wrench. 261,722, 11-10-81, Cl. D8-22.000.
Roco Wheels Limited: *See*—
  Hyams, Colin H., 261,755, Cl. D12-205.000.
Rubbermaid Incorporated: *See*—
  Brazis, William E., 261,720, Cl. D34-9.000.
Rymes, William H. Plaque. 261,745, 11-10-81, Cl. D11-136.000.
Sacramento Municipal Utility District: *See*—
  Whitney, Daniel D., 261,806, Cl. D24-17.000.
Sawada, Masaji; and Yamasaki, Tautomu, to Sharp Corporation. Filling station terminal. 261,772, 11-10-81, Cl. D18-4.000.
Schaer, Wolfgang: *See*—
  McTighe, William J.; and Schaer, Wolfgang, 261,742, Cl. D11-56.000.
Sciotti, Robert. Finger ring or similar article. 261,741, 11-10-81, Cl. D11-30.000.
SCM (Canada) Limited: *See*—
  McMullan, Robert G., 261,727, Cl. D9-416.000.
Sergent, Edward W., to M.P.H. Industries, Inc. Traffic radar unit. 261,735, 11-10-81, Cl. D10-46.000.
Sharp Corporation: *See*—
  Sawada, Masaji; and Yamasaki, Tsutomu, 261,772, Cl. D18-4.000.
  Yamagami, Masafumi; Hayashi, Shigeaki; and Tatsugami, Harumi, 261,731, Cl. D10-30.000.
  Yamagami, Masafumi; Hayashi, Shigeaki; and Tatsugami, Harumi, 261,732, Cl. D10-30.000.
Shelly & Anderson Furniture Mfg. Co., Inc.: *See*—
  Bick, Michael A., 261,706, Cl. D6-63.000.
Shenandoah Manufacturing Co., Inc.: *See*—
  Johnson, William H., 261,801, Cl. D23-85.000.
Sher, S. Franklin. Pipe. 261,813, 11-10-81, Cl. D27-03.000.
Shumway, DeWayne J., to Dixson, Inc. Capacitive pickup clip or similar article. 261,738, 11-10-81, Cl. D10-80.000.
Sparkomatic Corporation: *See*—
  Castagna, John F.; and Emmerling, Ronald A., 261,758, Cl. D14-10.000.
Spreter, Pierre, to Christian Dior, S.A. Cigarette lighter. 261,814, 11-10-81, Cl. D27-36.000.
Stairs, Henry M., Jr., to American Standard Inc. Lavatory or similar article. 261,798, 11-10-81, Cl. D23-58.000.
Steinberg, Alan M., to Gordy International Incorporated. Simulative toy projector. 261,786, 11-10-81, Cl. D10-110.000.
Stembridge, William F.: *See*—
  Gosline, Scott P.; and Stembridge, William F., 261,736, Cl. D10-57.000.
Stolarz, Edward M., to Presto Lock Company, Division of Walter Kidde & Company, Inc. Handle stud. 261,725, 11-10-81, Cl. D8-321.000.
Sylvan, Richard: *See*—
  Ferdinand, Irwin J.; Sylvan, Richard; and Baisch, Herbert, 261,712, Cl. D6-178.000.
Systems Consultants, Inc.: *See*—
  Ingber, Jack F.; and Hutting, Richard, 261,761, Cl. D14-101.000.
Taicher, Lee D. Shoe bottom. 261,696, 11-10-81, Cl. D2-322.000.
Takimoto, Tetsuro; Mohri, Motoya; Wada, Kiyoshi; Uchiyama, Rikio; Nishigaki, Koichi; and Aoko, Toshie, to Victor Company of Japan, Limited. Television receiver. 261,767, 11-10-81, Cl. D14-81.000.
Tatsugami, Harumi: *See*—
  Yamagami, Masafumi; Hayashi, Shigeaki; and Tatsugami, Harumi, 261,731, Cl. D10-30.000.
  Yamagami, Masafumi; Hayashi, Shigeaki; and Tatsugami, Harumi, 261,732, Cl. D10-30.000.
Teacrest Corporation, The: *See*—
  Mont, Howard I., 261,717, Cl. D7-79.000.
Templin, Werner, to Dambach Templin GmbH. Type font for vehicular license plate. 261,774, 11-10-81, Cl. D18-24.000.
Texas Instruments Incorporated: *See*—
  Ichikawa, Shinpei; and Lawrence, William J., 261,773, Cl. D18-7.000.
Textron Inc.: *See*—
  Mulvihill, Thomas, 261,711, Cl. D6-145.000.
Thomas, Wesley L. Telephone. 261,763, 11-10-81, Cl. D14-53.000.
Thunderfoot Engineering: *See*—
  Ligrano, Ronald, 261,708, Cl. D6-85.000.
Tiger Electronic Toys, Inc.: *See*—
  Radtke, Lee, 261,780, Cl. D21-13.000.
Todd, James. Indoor/outdoor golf practice target. 261,791, 11-10-81, Cl. D21-234.000.
Uchiyama, Rikio: *See*—
  Takimoto, Tetsuro; Mobri, Motoya; Wada, Kiyoshi; Uchiyama, Rikio; Nishigaki, Koichi; and Aoko, Toshie, 261,767, Cl. D14-81.000.
Uniroyal, Inc.: *See*—
  Blankenship, Arthur C.; and Maxemovich, Marco, 261,753, Cl. D12-147.000.
Universal Optical Company, Inc.: *See*—
  Jobbins, Howell S., Jr., 261,771, Cl. D16-116.000.
Urbanus, David S.; and Hanson, Robert L., to Digital Equipment Corporation. Computer terminal. 261,762, 11-10-81, Cl. D14-100.000.
Valigura, Eugene E. Lighter clip. 261,775, 11-10-81, Cl. D19-56.000.
Valli & Colombo S.p.A.: *See*—
  Valli, Pasquale, 261,726, Cl. D8-301.000.
Valli, Pasquale, to Valli & Colombo S.p.A. Combined door lever and escutcheon unit. 261,726, 11-10-81, Cl. D8-301.000.
Victor Company of Japan, Limited: *See*—
  Takimoto, Tetsuro; Mohri, Motoya; Wada, Kiyoshi; Uchiyama, Rikio; Nishigaki, Koichi; and Aoko. Toshie, 261,767, Cl. D14-81.000.
Video Turf Incorporated: *See*—
  Muir, James H., 261,782, Cl. D21-37.000.
Vitaloni, Alberto, to Vitaloni S.p.A. Rear view mirror. 261,754, 11-10-81, Cl. D12-187.000.
Vitaloni S.p.A.: *See*—
  Vitaloni, Alberto, 261,754, Cl. D12-187.000.
Vorwerk & Co. Elektr Werke KG: *See*—
  Gibiec, Oswald, 261,719, Cl. D7-159.000.
Wada, Kiyoshi: *See*—
  Takimoto, Tetsuro; Mohri, Motoya; Wada, Kiyoshi; Uchiyama, Rikio; Nishigaki, Koichi; and Aoko, Toshie, 261,767, Cl. D14-81.000.

Waterfield, Martin J.: *See—*
Harshman, Arthur L.; and Waterfield, Martin J., 261,746, Cl. D11-146.000.

Wendt, David W., to Enrichment Reading Corporation of Amerca. Electronic teaching unit. 261,776, 11-10-81, Cl. D19-60.000.

Whalen, Robert, to WNF Design Incorporated. Chair. 261,702, 11-10-81, Cl. D6-26.000.

Whitney, Daniel D., to Sacramento Municipal Utility District. Charcoal test tray canister. 261,806, 11-10-81, Cl. D24-17.000.

Wilkes, Kenneth R., to Quaker Oats Company, The. Case for a phonograph or the like. 261,699, 11-10-81, Cl. D3-73.000.

Winter OY: *See—*
Heikel, Aslak R.; Kokki, Heikki; and Pattiniemi, Veikko, 261,769, Cl. D15-147.000.

Wippern, Gerhard, to Esselte Meto International GmbH. Label. 261,778, 11-10-81, Cl. D20-27.000.

WNF Design Incorporated: *See—*
Whalen, Robert, 261,702, Cl. D6-26.000.

Wunderlich, Robert J., to Autotronics, Inc. Portable jack plug socket connector for vehicles. 261,757, 11-10-81, Cl. D13-30.000.

Yamagami, Masafumi; Hayashi, Shigeaki; and Tatsugami, Harumi, to Sharp Corporation. Digital watch. 261,731, 11-10-81, Cl. D10-30.000.

Yamagami, Masafumi; Hayashi, Shigeaki; and Tatsugami, Harumi, to Sharp Corporation. Digital watch. 261,732, 11-10-81, Cl. D10-30.000.

Yamasaki, Tsutomu: *See—*
Sawada, Masaji; and Yamasaki, Tsutomu, 261,772, Cl. D18-4.000.

LIST OF PLANT PATENTEES

Anderson, Frederic W. Nectarine tree. 4,789, 11-10-81, Cl. 41.000.

Koyama, Albert T.: *See—*
Olmo, Harold P.; and Koyama, Albert T., 4,787, Cl. 47.000.
Olmo, Harold P.; and Koyama, Albert T., 4,788, Cl. 47.000.

Olmo, Harold P.; and Koyama, Albert T. Table grape. 4,787, 11-10-81, Cl. 47.000.

Olmo, Harold P.; and Koyama, Albert T. Table grape. 4,788, 11-10-81, Cl. 47.000.

CLASSIFICATION OF PATENTS

ISSUED NOVEMBER 10, 1981

NOTE.—First number, class; second number, subclass; third number, patent number

CLASS 2	
13	4,298,991
CLASS 3	
1.911	4,298,992
1.912	4,298,993
13	4,298,994
	4,298,995
	4,298,996
36	4,298,997
	4,298,998
CLASS 7	
170	4,298,999
CLASS 8	
477	4,299,591
496	4,299,592
CLASS 10	
86 F	4,299,000
133	4,299,001
CLASS 14	
2.4	4,299,002
CLASS 15	
53 AB	4,299,003
97 R	4,299,004
244 A	4,299,005
248 R	4,299,006
339	4,299,007
CLASS 16	
95 D	4,299,008
CLASS 17	
1 G	4,299,009
50	4,299,010
CLASS 19	
106 R	4,299,011
CLASS 23	
232 R	4,299,593
CLASS 24	
19	4,299,012
67.9	4,299,013
197	4,299,014
CLASS 28	
221	4,299,015
CLASS 29	
25.11	4,299,016
90 R	4,299,017
129	4,299,018
243.52	4,299,019
259	4,299,020
432	4,299,021
490	4,299,022
564.1	4,299,023
577 C	4,299,024
596	4,299,025
612	4,299,026
766	4,299,027
828	4,299,028
877	4,299,029
CLASS 30	
261	4,299,030
CLASS 33	
18 R	4,299,031
174 A	4,299,032
178 F	4,299,033
185 R	4,299,034
366	4,299,035
CLASS 34	
16	4,299,036
CLASS 36	
7.6	4,299,037
67 D	4,299,038
97	4,299,039
CLASS 40	
20 R	4,299,040
124.1	4,299,041
571	4,299,042
624	4,299,043
CLASS 42	
1 ST	4,299,044
1 Y	4,299,045
75 D	4,299,046
CLASS 43	
9	4,299,047
98	4,299,048
CLASS 44	
50	4,299,594
CLASS 46	
8	4,299,049
11	4,299,050
221	4,299,051
CLASS 47	
43	4,299,052
52	4,299,053
64	4,299,054
66	4,299,055
81	4,299,056
CLASS 49	
375	4,299,057
386	4,299,058
401	4,299,059
501	4,299,060
CLASS 51	
101 R	4,299,061
206 F	4,299,062
241 S	4,299,063
CLASS 52	
35	4,299,064
79.7	4,299,065
81	4,299,066
127	4,299,067
204	4,299,068
309.11	4,299,070
309.4	4,299,069
593	4,299,071
CLASS 53	
306	4,299,072
493	4,299,073
529	4,299,074
550	4,299,075
587	4,299,076
CLASS 55	
21	4,299,595
26	4,299,596
96	4,299,597
99	4,299,598
180	4,299,599
213	4,299,600
230	4,299,601
240	4,299,602
290	4,299,603
303	4,299,604
370	4,299,605
CLASS 56	
13.6	4,299,077
14.5	4,299,078
16.7	4,299,079
314	4,299,080
330	4,299,081
CLASS 57	
9	4,299,082
18	4,299,083
58.89	4,299,084
130	4,299,085
CLASS 60	
39.06	4,299,086
39.14 M	4,299,087
39.27	4,299,088
290	4,299,089
612	4,299,090
CLASS 62	
13	4,299,607
28	4,299,606
50	4,299,091
81	4,299,092
101	4,299,093
133	4,299,094
155	4,299,095
180	4,299,096
229	4,299,097
238.6	4,299,098
256	4,299,099
457	4,299,100
CLASS 63	
12	4,299,101
CLASS 64	
17 A	Re.30,790
CLASS 65	
3.1	4,299,608
3.13	4,299,609
19	4,299,610
27	4,299,611
99 A	4,299,612
CLASS 70	
165	4,299,102
CLASS 71	
64 F	4,299,613
67	4,299,614
86	4,299,615
100	4,299,616
109	4,299,617
121	4,299,618
CLASS 72	
16	4,299,103
20	4,299,104
54	4,299,105
78	4,299,106
120	4,299,107
178	4,299,108
241	4,299,109
327	4,299,110
342	4,299,111
354	4,299,112
389	4,299,113
CLASS 73	
1 H	4,299,114
15 B	4,299,115
30	4,299,116
35	4,299,117
39	4,299,118
	4,299,119
87	4,299,120
118	4,299,121
155	4,299,123
204	4,299,124
	4,299,125
295	4,299,126
504	4,299,127
627	4,299,128
746	4,299,129
766	4,299,130
789	4,299,131
862.59	4,299,122
864.01	4,299,795
CLASS 74	
10.33	4,299,132
415	4,299,133
473 R	4,299,134
475	4,299,135
478.5	4,299,136
512	4,299,137
552	4,299,138
560	4,299,139
665 G	4,299,140
785	4,299,141
CLASS 75	
10 R	4,299,619
53	4,299,620
124	4,299,621
	4,299,622
128 R	4,299,623
130 R	4,299,624
174	4,299,625
175.5	4,299,626
206	4,299,627
230	4,299,628
251	4,299,629
CLASS 76	
25 A	4,299,142
43	4,299,143
CLASS 81	
3 R	4,299,144
57.29	4,299,145
420	4,299,146
CLASS 82	
47	4,299,147
CLASS 83	
34	4,299,148
91	4,299,149
110	4,299,150
300	4,299,151
763	4,299,152
CLASS 84	
1.03	4,299,154
1.1	4,299,153
177	4,299,155
390	4,299,156
CLASS 89	
1.5 D	4,299,157
137	4,299,158
CLASS 92	
98 R	4,299,159
CLASS 99	
323.5	4,299,160
369	4,299,161
CLASS 100	
43	4,299,162
CLASS 101	
36	4,299,163
120	4,299,164
150	4,299,165
CLASS 102	
202.11	4,299,168
202.3	4,299,167
210	4,299,169
355	4,299,170
501	4,299,166
CLASS 104	
70	4,299,171
247	4,299,172
284	4,299,173
CLASS 105	
377	4,299,174
CLASS 106	
22	4,299,630
97	4,299,633
103	4,299,634
308 B	4,299,635
CLASS 109	
19	4,299,175
34	4,299,176
CLASS 110	
101 CF	4,299,177
234	4,299,178
CLASS 112	
121.12	4,299,179
158 E	4,299,180
184	4,299,181
277	4,299,182
CLASS 114	
230	4,299,183
253	4,299,184
CLASS 116	
202	4,299,185
CLASS 118	
407	4,299,186
411	4,299,187
412	4,299,188
675	4,299,189
CLASS 119	
1	4,299,190
18	4,299,191
CLASS 122	
4 D	4,299,192
7 R	4,299,193
33	4,299,194
CLASS 124	
24 R	4,299,195
CLASS 125	
11 AT	4,299,196
CLASS 126	
165	4,299,197
247	4,299,198
420	4,299,199
434	4,299,200
440	4,299,201
441	4,299,202
443	4,299,203
447	4,299,204
449	4,299,205
CLASS 128	
25 B	4,299,206
56	4,299,207
62 A	4,299,208
87 B	4,299,209
87 R	4,299,210
89 R	4,299,211
92 A	4,299,212
133	4,299,213
163	4,299,214
200.24	4,299,215
205.12	4,299,216
214 F	4,299,218
214.4	4,299,217
215	4,299,219
260	4,299,220
276	4,299,221
278	4,299,222
287	4,299,223
325	4,299,224
328	4,299,225
344	4,299,226
	4,299,227
348	4,299,228
395	4,299,229
630	4,299,230
639	4,299,231
642	4,299,232
687	4,299,233
698	4,299,234
718	4,299,235
728	4,299,236
742	4,299,237
763	4,299,238
783	4,299,239
CLASS 133	
7	4,299,240
48 R	4,299,241
53	4,299,242
73	4,299,243
CLASS 134	
102	4,299,244
140	4,299,245
CLASS 135	
66	4,299,246
CLASS 137	
43	4,299,247
202	4,299,248
335.17	4,299,249
546	4,299,250
556	4,299,251
625.5	4,299,252
CLASS 138	
30	4,299,253
	4,299,254
89	4,299,255
137	4,299,256
CLASS 139	
54	4,299,257
CLASS 141	
1	4,299,258
1.1	4,299,259
311 R	4,299,260
387	4,299,261
	4,299,262
CLASS 144	
144.5 R	4,299,263
CLASS 149	
19.4	4,299,636
CLASS 152	
209 R	4,299,264
CLASS 156	
64	4,299,637
85	4,299,638
104	4,299,639
110 C	4,299,640
143	4,299,641
191	4,299,642
223	4,299,643
230	4,299,644
258	4,299,645
278	4,299,646
394 FM	4,299,647
608	4,299,648
610	4,299,649
617 SP	4,299,650
	4,299,651
CLASS 157	
1.1	4,299,265
CLASS 162	
30 K	4,299,652
88	4,299,653
164 EP	4,299,654
343	4,299,655
CLASS 164	
155	4,299,268
324	4,299,269
491	4,299,266
502	4,299,267
CLASS 165	
45	4,299,270
47	4,299,271
48 S	4,299,277
66	4,299,272
78	4,299,273
104.14	4,299,275
104.17	4,299,274
162	4,299,276
CLASS 166	
53	4,299,278
72	4,299,279
73 R	4,299,280
135	4,299,281
177	4,299,282
231	4,299,283
245	4,299,284
259	4,299,285
274	4,299,286
297	4,299,287
CLASS 168	
23	4,299,288
CLASS 169	
57	4,299,289
CLASS 172	
4.5	4,299,290
49.5	4,299,291
311	4,299,292
CLASS 173	
104	4,299,293
148	4,299,294
CLASS 174	
35 R	4,300,016
36	4,300,017
110 SR	4,299,713
CLASS 175	
45	4,299,295
65	4,299,296
410	4,299,297
418	4,299,298
CLASS 177	
264	4,299,299
CLASS 178	
70 R	4,300,018
CLASS 179	
1 GD	4,300,020
1 GE	4,300,019
18 FA	4,300,021
115.5 DV	4,300,022

170 NC 4,300,023
175.2 A 4,300,024

CLASS 180

6.2 4,299,300
6.5 4,299,301
148 4,299,302

CLASS 181

131 4,299,303
144 4,299,304
230 4,299,305

CLASS 182

210 4,299,306

CLASS 184

103 R 4,299,307

CLASS 187

29 R 4,299,308
4,299,309

CLASS 188

4 R 4,299,310
70 R 4,299,311
165 4,299,312

CLASS 190

18 A 4,299,313

CLASS 192

3.3 4,299,315
12 C 4,299,314
48.8 4,299,316
53 F 4,299,317
64 4,299,318
103 B 4,299,319
113 B 4,299,320

CLASS 198

321 4,299,321
341 Re.30,791
347 4,299,322
774 4,299,323

CLASS 200

42 T 4,300,030
61.69 4,300,025
153 J 4,300,026
153 V 4,300,027
155 R 4,300,028
159 B 4,300,029

CLASS 202

170 4,299,663
4,299,664
204 4,299,665
267 R 4,299,666

CLASS 203

42 4,299,667
51 4,299,668

CLASS 204

1 T 4,299,669
29 4,299,670
35 R 4,299,671
43 N 4,299,672
98 4,299,673
4,299,674
4,299,675
109 4,299,676
180 P 4,299,677
192 E 4,299,680
192 EC 4,299,679
192 M 4,299,678
246 4,299,683
255 4,299,681
263 4,299,682

CLASS 206

170 4,299,324
435 Re.30,792

CLASS 208

8 LE 4,299,684
48 AA 4,299,685
111 4,299,686
113 4,299,687
120 4,299,688
139 4,299,689
188 4,299,690
263 4,299,691

CLASS 209

1 4,299,692
3 4,299,693
139 R 4,299,694
260 4,299,695
533 4,299,325
564 4,299,326

CLASS 210

96.1 4,299,698
120 4,299,696
143 4,299,699
222 4,299,700
4,299,701

433.2 4,299,702
512.1 4,299,703
522 Re.30,793
532.1 4,299,697
634 4,299,704
647 4,299,705
649 4,299,706
791 4,299,707

CLASS 211

186 4,299,327

CLASS 215

252 4,299,328

CLASS 219

10.41 4,300,031
10.55 B 4,300,032
70 4,300,033
75 4,300,034
130.21 4,300,035
130.33 4,300,036
497 4,300,037
544 4,300,038

CLASS 220

276 4,299,329
288 4,299,330
316 4,299,331
378 4,299,332

CLASS 221

1 4,299,333
4,299,334
241 4,299,335

CLASS 222

80 4,299,336
135 4,299,337
152 4,299,338
153 4,299,339
189 4,299,340

CLASS 224

42.03 B 4,299,341
169 4,299,343
242 4,299,344
252 4,299,345
325 4,299,346

CLASS 225

97 4,299,347

CLASS 228

144 4,299,348

CLASS 229

1.5 B 4,299,349
5.5 4,299,350
42 4,299,351

CLASS 230

12 A 4,299,354

CLASS 233

3 4,299,352
7 4,299,353

CLASS 235

92 EV 4,300,039
381 4,300,040
449 4,300,041
4,300,042

CLASS 239

338 4,299,355
558 4,299,356

CLASS 242

18 DD 4,299,357
55 4,299,358
131 4,299,359

CLASS 244

3.13 4,299,360
224 4,299,361

CLASS 248

49 4,299,362
56 4,299,363
58 4,299,364
99 4,299,365
145.6 4,299,366
235 4,299,367
246 4,299,368
263 4,299,369
278 4,299,370

CLASS 249

68 4,299,371
107 4,299,372

CLASS 250

262 4,300,043
282 4,300,044
305 4,300,045
323 4,300,046
330 4,300,047
338 4,300,048

339 4,300,049
374 4,300,050
445 T 4,300,051
453 4,300,052
468 4,300,053
506 4,299,658
510 4,300,055
517 4,300,056

CLASS 251

58 4,299,373
129 4,299,374

CLASS 252

2 4,299,708
8.5 A 4,299,710
8.55 D 4,299,709
4,299,711
52 A 4,299,712
73 4,299,714
74 4,299,715
99 4,299,716
4,299,717
186 4,299,718
188 4,299,719
299.1 4,299,720
316 4,299,723
348 4,299,724
389 A 4,299,725
408 4,299,726
4,299,727
4,299,728
412 4,299,729
435 4,299,730
451 4,299,731
455 R 4,299,732
455 Z 4,299,733
462 4,299,734
465 4,299,735
506 4,299,736
522 R 4,299,737
541 4,299,738
545 4,299,739
4,299,740
628 4,299,721
4,299,722

CLASS 254

29 R 4,299,375

CLASS 260

17.4 CL 4,299,741
22 EP 4,299,742
22 T 4,299,743
23 AR 4,299,744
4,299,755
28.5 AV 4,299,745
29.2 M 4,299,746
29.6 NR 4,299,747
29.6 RW 4,299,748
29.6 Z 4,299,749
30.2 4,299,750
30.4 N 4,299,751
31.4 R 4,299,752
31.6 4,299,753
33.6 UA 4,299,754
40 R 4,299,756
42.18 4,299,757
42.53 4,299,761
43.7 R 4,299,758
4,299,759
43.9 KA 4,299,760
112.5 R 4,299,762
4,299,763
153 4,299,764
239 BF 4,299,765
239.3 R 4,299,766
293.3 D 4,299,767
326.25 4,299,768
326.35 4,299,769
326.47 4,299,770
333 4,299,772
343.6 4,299,773
378 4,299,771
397.2 4,299,774
464 4,299,775
465 D 4,299,776
465.6 4,299,777
500.5 H 4,299,778
508 4,299,779
513 N 4,299,780
665 R 4,299,781
932 4,299,782
948 4,299,783

CLASS 261

78 A 4,299,784
111 4,299,785
128 4,299,786

CLASS 266

41 4,299,787
83 4,299,788
176 R 4,299,789
299 4,299,790
328.18 4,299,792
328.9 4,299,791

564 4,299,793

CLASS 264

205 4,299,376

CLASS 269

136 4,299,377

CLASS 270

54 4,299,378

CLASS 271

3.1 4,299,379
9 4,299,380
96 4,299,381
287 4,299,382

CLASS 273

29 A 4,299,383
61 R 4,299,384
73 D 4,299,385
85 F 4,299,386
119 A 4,299,387
143 R 4,299,388
239 4,299,389
257 4,299,390
271 4,299,391
274 4,299,392
310 4,299,393
348 4,299,394

CLASS 277

12 4,299,395
4,299,396
34 4,299,397
65 4,299,398
207 A 4,299,399
212 FB 4,299,400
216 4,299,401

CLASS 279

75 4,299,402

CLASS 280

47.29 4,299,403
634 4,299,404
733 4,299,406
759 4,299,405
775 4,299,407
804 4,299,408
819 4,299,409

CLASS 281

21 R 4,299,410

CLASS 282

27.5 4,299,411

CLASS 285

110 4,299,412
114 4,299,413
187 4,299,414
281 4,299,415
4,299,416

CLASS 292

320 4,299,417

CLASS 293

126 4,299,418

CLASS 294

55 4,299,419
149 4,299,342

CLASS 296

1 C 4,299,420
27 4,299,421
166 4,299,422

CLASS 297

440 4,299,423

CLASS 299

93 4,299,424

CLASS 301

9 CN 4,299,425

CLASS 303

6 C 4,299,426
22 A 4,299,427
4,299,428

CLASS 307

10 AT 4,300,057
261 4,300,058
4,300,059
272 A 4,300,060
297 4,300,061
304 4,300,062
355 4,300,063
446 4,300,064
571 4,300,065

CLASS 310

53 4,300,066
80 4,300,067

CLASS 312

236 4,299,429

CLASS 313

315 4,300,068
403 4,300,069
4,300,070
407 4,300,071

CLASS 315

39.51 4,300,072
53 4,300,073
307 4,300,075
398 4,300,076
401 4,300,074

CLASS 318

49 4,300,078
390 4,300,079
563 4,300,080
599 4,300,081
614 4,300,082
686 4,300,083
696 4,300,084
4,300,085
801 4,300,086
812 4,300,077

CLASS 320

2 4,300,087
61 4,300,088

CLASS 322

8 4,300,089

CLASS 323

311 4,300,090
315 4,300,091

CLASS 324

57 R 4,300,092
61 R 4,300,093
65 R 4,300,094
255 4,300,095
309 4,300,096
329 4,300,097
338 4,300,098

CLASS 328

6 4,300,099
109 4,300,100

CLASS 330

149 4,300,101
254 4,300,102
274 4,300,103
280 4,300,104

CLASS 331

83 4,300,105
94.5 C 4,300,106
94.5 H 4,300,107

CLASS 333

81 R 4,300,108

CLASS 334

51 4,300,109

CLASS 335

6 4,300,110

CLASS 336

96 4,300,111
180 4,300,112

CLASS 337

187 4,300,113

CLASS 338

172 4,300,114
314 4,300,115

CLASS 339

17 D 4,299,430
60 R 4,299,431
73 M 4,299,432
91 R 4,299,433
96 4,299,434
150 P 4,299,435
258 R 4,299,436

CLASS 340

22 4,300,121
32 4,300,116
52 D 4,300,117
58 4,300,118
4,300,119
4,300,120
146.3 MA 4,300,122
146.3 Z 4,300,123
306 4,300,124
310 A 4,300,125
4,300,126
365 L 4,300,127
392 4,300,128
539 4,300,129
568 4,300,130
618 4,300,131

629 4,300,132
630 4,300,133
685 4,300,134
690 4,300,135
747 4,300,136
765 4,300,137
785 4,300,138

CLASS 343

103 4,300,139
873 4,300,140
903 4,300,141

CLASS 346

76 PH 4,300,142
135.1 4,300,143
140 R 4,300,144
4,300,145
153 4,300,146
159 4,300,147

CLASS 350

3.71 4,299,437
6.6 4,299,438
49 4,299,439
81 4,299,440
95 4,299,441
97 4,299,442
162 SF 4,299,443
278 4,299,444
295 4,299,445
296 4,299,446
334 4,299,447
358 4,299,448
4,299,449
360 4,299,450
407 4,299,451
426 4,299,452
4,299,453
427 4,299,454

CLASS 351

30 4,299,455
121 4,299,456

CLASS 352

140 4,299,457

CLASS 354

6 4,299,458
23 D 4,299,459
25 4,299,460
27 4,299,461
53 4,299,462
127 4,299,463
137 4,299,464
145 4,299,465
173 4,299,466
195 4,299,467
268 4,299,469
286 4,299,470
304 4,299,471
318 4,299,472

CLASS 355

3 DR 4,299,474
3 R 4,299,478
3 SH 4,299,473
8 4,299,475
14 C 4,299,476
14 R 4,299,477
38 4,299,479
66 4,299,480
69 4,299,481

CLASS 356

28.5 4,299,484
124 4,299,482
132 4,299,483
225 4,299,468
307 4,299,485
318 4,299,486
320 4,299,487
328 4,299,488
336 4,299,489
350 4,299,490
376 4,299,491
386 4,299,492
414 4,299,493
432 4,299,494
442 4,299,495
446 4,299,496
448 4,299,497

CLASS 357

15 4,300,148
23 4,300,150
24 4,300,151
42 4,300,152
71 4,300,149
80 4,300,153

CLASS 358

23 4,300,154
24 4,300,155
64 4,300,156

74 4,300,157
80 4,300,158
109 4,300,159
113 4,300,160
142 4,300,161
160 4,300,162
163 4,300,163
4,300,164
195.1 4,300,165
210 4,300,166
4,300,167
4,300,168
256 4,300,169
293 4,300,170

CLASS 360

10 4,300,171
33 4,300,172
51 4,300,173
78 4,300,174
94 4,300,175
105 4,300,176
113 4,300,177
121 4,300,178
127 4,300,179
130.33 4,300,180

CLASS 361

4 4,300,181
79 4,300,182
152 4,300,183
397 4,300,184

CLASS 362

33 4,300,185
66 4,300,186
223 4,300,187
226 4,300,188
267 4,300,189
404 4,300,190

CLASS 363

17 4,300,191

CLASS 364

200 4,300,192
4,300,193
4,300,194
4,300,195
489 4,300,196
508 4,300,197
513 4,300,198
537 4,300,199
565 4,300,200
567 4,300,201
4,300,202
577 4,300,203
578 4,300,205
705 4,300,204
900 4,300,206
4,300,207
4,300,208

CLASS 365

8 4,300,209
45 4,300,210
110 4,300,211
185 4,300,212
190 4,300,213
196 4,300,214

CLASS 366

76 4,299,498
85 4,299,499
198 4,299,500
349 4,299,501

CLASS 367

11 4,300,215
113 4,300,216
140 4,300,217
165 4,300,218
174 4,300,219
188 4,300,220

CLASS 368

22 4,300,221
37 4,300,222

85 4,300,223
201 4,300,224

CLASS 369

2 4,300,225
45 4,300,226
84 4,300,227
216 4,300,228

CLASS 370

20 4,300,229
63 4,300,230
86 4,300,231
100 4,300,232

CLASS 371

22 4,300,233
27 4,300,234

CLASS 375

1 4,300,235
23 4,300,236

CLASS 376

190 4,300,054
217 4,299,657
249 4,299,656
251 4,299,661
260 4,299,662
272 4,299,659
298 4,299,660

CLASS 400

144.2 4,299,502
161.5 4,299,503
208 4,299,504
258 4,299,505

CLASS 401

72 4,299,506

CLASS 403

116 4,299,507
172 4,299,508
252 4,299,509
282 4,299,510
4,299,511
357 4,299,512

CLASS 404

97 4,299,513

CLASS 405

115 4,299,514
239 4,299,515
266 4,299,516
296 4,299,517

CLASS 406

62 4,299,518

CLASS 411

361 4,299,519
437 4,299,520

CLASS 414

13 4,299,521
24.5 4,299,522
55 4,299,523
117 4,299,524
181 4,299,525
392 4,299,526
462 4,299,527
546 4,299,528
590 4,299,529
719 4,299,530
746 4,299,531
750 4,299,532
752 4,299,533

CLASS 415

9 4,299,534
160 4,299,535
198.2 4,299,536

CLASS 416

119 4,299,537
134 A 4,299,538
138 4,299,539

226 4,299,540

CLASS 417

12 4,299,541
214 4,299,542
269 4,299,543
417 4,299,544
490 4,299,545

CLASS 418

13 4,299,546
15 4,299,547

CLASS 422

63 4,299,796
68 4,299,794
112 4,299,797
281 4,299,798

CLASS 423

206 T 4,299,799
219 4,299,800
228 4,299,801
244 4,299,802
308 4,299,803
321 R 4,299,804
4,299,805
322 4,299,806
327 4,299,807
331 4,299,808
497 4,299,809
510 4,299,810
578 R 4,299,811

CLASS 424

1 4,299,812
4,299,813
4,299,814
4,299,815
45 4,299,816
70 4,299,817
84 4,299,818
95 4,299,819
177 4,299,820
4,299,821
180 4,299,822
4,299,823
4,299,824
4,299,825
181 4,299,826
216 4,299,827
238 4,299,828
246 4,299,829
250 4,299,830
251 4,299,831
253 4,299,832
4,299,833
4,299,834
258 4,299,835
261 4,299,836
273 B 4,299,837
274 4,299,838
4,299,839
4,299,840
282 4,299,841
301 4,299,842
304 4,299,843
308 4,299,844
324 4,299,845
331 4,299,846

CLASS 425

173 4,299,548
214 4,299,549
321 4,299,550
371 4,299,551
4,299,552
572 4,299,553

CLASS 426

18 4,299,847
20 4,299,848
51 4,299,849
124 4,299,850
132 4,299,851
266 4,299,852
271 4,299,853

331 4,299,854
312 4,299,855
573 4,299,856
618 4,299,857
656 4,299,858

CLASS 427

34 4,299,859
53.1 4,299,860
62 4,299,861
89 4,299,862
140 4,299,863
160 4,299,864
243 4,299,865
253.6 4,299,866
377 4,299,867
389.9 4,299,868

CLASS 428

35 4,299,869
101 4,299,870
104 4,299,871
117 4,299,872
137 4,299,873
143 4,299,874
151 4,299,875
208 4,299,876
212 4,299,877
257 4,299,878
266 4,299,879
304 4,299,880
308 4,299,881
329 4,299,882
332 4,299,883
377 4,299,884
403 4,299,885
412 4,299,886
428 4,299,887
457 4,299,888
569 4,299,889

CLASS 429

124 4,299,890
179 4,299,891
194 4,299,892

CLASS 430

8 4,299,893
9 4,299,894
17 4,299,895
58 4,299,896
59 4,299,897
106 4,299,898
108 4,299,899
122 4,299,900
4,299,901
125 4,299,902
137 4,299,903
139 4,299,904
157 4,299,906
175 4,299,907
244 4,299,908
264 4,299,909
270 4,299,910
286 4,299,911
302 4,299,912
379 4,299,913
384 4,299,914

CLASS 431

16 4,299,554
20 4,299,555
29 4,299,556
71 4,299,557
359 4,299,558

CLASS 432

13 4,299,559
28 4,299,561
36 4,299,560
58 4,299,562
4,299,563
106 4,299,564
194 4,299,565
241 4,299,566
253 4,299,567

CLASS 433

6 4,299,568
8 4,299,569
62 4,299,570
102 4,299,571
144 4,299,572
167 4,299,573
213 4,299,574

CLASS 434

11 4,299,575
39 4,299,576
170 4,299,577
177 4,299,578
226 4,299,579
335 4,299,580

CLASS 435

6 4,299,915
4,299,916
19 4,299,917
30 4,299,918
283 4,299,919
285 4,299,920
298 4,299,921

CLASS 490

157 4,299,905

CLASS 485

109 4,300,237
161 4,300,238
601 4,300,239

CLASS 476

69 4,299,581
109 4,299,582
110 4,299,583
135 4,299,584
140 4,299,585
201 4,299,586
262 4,299,587
264 4,299,588

CLASS 493

109 4,299,589
164 4,299,590

CLASS 501

91 4,299,631
127 4,299,632

CLASS 521

26 4,299,922
110 4,299,923
131 4,299,924
188 4,299,925

CLASS 525

55 4,299,926
64 4,299,927
67 4,299,928
4,299,929
74 4,299,930
95 4,299,931
130 4,299,932
170 4,299,933
173 4,299,934

CLASS 526

88 4,299,935
119 4,299,936
124 4,299,937
192 4,299,938
258 4,299,939
273 4,299,941
278 4,299,940
323.1 4,299,942

CLASS 528

9 4,299,943
89 4,299,944
126 4,299,945
128 4,299,946
139 4,299,947
171 4,299,948
220 4,299,949

306 4,299,950
491 4,299,951
500 4,299,952

CLASS 536

17 R 4,299,953

CLASS 544

30 4,299,954
4,299,955
177 4,299,956
4,299,957
221 4,299,958
283 4,299,959
320 4,299,960
334 4,299,961
408 4,299,962

CLASS 546

89 4,299,963

CLASS 548

146 4,299,964
257 4,299,965

CLASS 549

52 4,299,966
65 4,299,967
68 4,299,968

CLASS 560

9 4,299,969
39 4,299,970
107 4,299,971
124 4,299,972
4,299,973
148 4,299,974
151 4,299,975
190 4,299,976

CLASS 563

416 4,299,977
554 4,299,978
561 4,299,979
599 4,299,980
609 4,299,981

CLASS 564

156 4,299,982
394 4,299,983
426 4,299,984
467 4,299,985

CLASS 568

8 4,299,986
321 4,299,987
379 4,299,988
397 4,299,989
454 4,299,990
573 4,299,991
587 4,299,992
617 4,299,993
625 4,299,994
649 4,299,995
658 4,299,996
678 4,299,997
697 4,299,998
4,299,999
724 4,300,000
767 4,300,001
817 4,300,002
863 4,300,003

CLASS 570

211 4,300,004
224 4,300,005

CLASS 585

10 4,300,006
323 4,300,007
360 4,300,008
408 4,300,009
434 4,300,010
467 4,300,011
470 4,300,012
481 4,300,013
4,300,014
722 4,300,015

CLASSIFICATION OF DESIGNS

D2—	309	261,695	D7—	1	261,715			261,737		53	261,763		23	261,781	D24—	1.1	261,806
	322	261,696		52	261,716		80	261,738		68	261,764		37	261,782		10	261,805
	360	261,697		79	261,717		96	261,739		73	261,765		63	261,783		17	261,806
	400	261,698		102	261,723		106	261,740			261,766		78	261,784		28	261,807
D3—	73	261,699		153	261,718		110	261,786		81	261,767		108	261,785		99	261,802
D4—	31	261,700		159	261,719	D11—	30	261,741		91	261,768		132	261,787			261,808
D6—	20	261,701	D8—	10	261,721		36	261,742		100	261,762		197	261,788	D25—	22	261,809
	26	261,702		22	261,722		87	261,743		101	261,761		209	261,789		26	261,810
	28	261,703		301	261,726		136	261,745		114	261,760		229	261,790	D26—	2	261,812
		261,704		321	261,724		146	261,746	D15—	147	261,769		234	261,791			
	38	261,705			261,725		158	261,747	D16—	31	261,770		251	261,792		02	261,811
	63	261,706	D9—	416	261,727	D12—	11	261,748		116	261,771		253	261,793	D27—	03	261,813
	85	261,707		418	261,728		92	261,751	D18—	4	261,772	D22—	7	261,794		36	261,814
		261,708		457	261,729		114	261,752		7	261,773		14	261,795	D28—	30	261,815
	114	261,709	D10—	12	261,730		147	261,753		24	261,774	D23—	48	261,796		36	261,816
	135	261,744		30	261,731		187	261,754	D19—	36	261,775		51	261,797		67	261,817
	143	261,710			261,732		205	261,755		60	261,776		58	261,798		73	261,818
	145	261,711		39	261,733	D13—	18	261,756	D20—	11	261,777		65	261,799	D34—	9	261,720
	178	261,712			261,734		30	261,757		27	261,778		71	261,800		15	261,749
	181	261,713		46	261,735	D14—	10	261,758	D21—	13	261,779		85	261,801		35	261,750
	232	261,714		57	261,736		30	261,759			261,780		163	261,803	D92—	1 R	261,819

CLASSIFICATION OF PLANTS

P.—	41	4,789		47	4,787			4,788									

GEOGRAPHICAL INDEX OF RESIDENCE OF INVENTORS

(U.S. States, Territories and Armed Forces, the Commonwealth of Puerto Rico, and the Canal Zone)

Alabama	1	Kentucky	21	Oregon	41
Alaska	2	Louisiana	22	Pennsylvania	42
American Samoa	3	Maine	23	Puerto Rico	43
Arizona	4	Maryland	24	Rhode Island	44
Arkansas	5	Massachusetts	25	South Carolina	45
California	6	Michigan	26	South Dakota	46
Canal Zone	7	Minnesota	27	Tennessee	47
Colorado	8	Mississippi	28	Texas	48
Connecticut	9	Missouri	29	Utah	49
Delaware	10	Montana	30	Vermont	50
District of Columbia	11	Nebraska	31	Virginia	51
Florida	12	Nevada	32	Virgin Islands	52
Georgia	13	New Hampshire	33	Washington	53
Guam	14	New Jersey	34	West Virginia	54
Hawaii	15	New Mexico	35	Wisconsin	55
Idaho	16	New York	36	Wyoming	56
Illinois	17	North Carolina	37	U.S. Air Force	57
Indiana	18	North Dakota	38	U.S. Army	58
Iowa	19	Ohio	39	U.S. Navy	59
Kansas	20	Oklahoma	40		

(First number in listing denotes location according to above key. Refer to patent number in body of the Official Gazette to obtain details as to inventor name, location, etc.)

PATENTS

6 :	4,299,252		4,299,481		4,300,209		4,299,360		4,299,496		4,300,083
	4,300,203		4,299,490		4,300,212		4,299,361		4,299,507		4,300,114
01 :	4,299,127		4,299,504		4,300,232		4,299,375		4,299,522		4,300,190
	4,299,620		4,299,513	08 :	4,299,039		4,299,384		4,299,536	19 :	4,299,052
02 :	4,299,409		4,299,548		4,299,186		4,299,393		4,299,555		4,299,144
04 :	4,298,996		4,299,577		4,299,205		4,299,406		4,299,557		4,299,200
	4,299,097		4,299,580		4,299,209		4,299,429		4,299,567		4,299,321
	4,299,369		4,299,616		4,299,238		4,299,569		4,299,585		4,300,095
	4,300,023		4,299,626		4,299,313		4,299,579		4,299,615		4,300,123
	4,300,192		4,299,642		4,299,474		4,299,637		4,299,688	20 :	4,299,269
	4,300,214		4,299,649		4,299,483		4,299,643		4,299,689	21 :	4,299,021
05 :	4,299,334		4,299,660		4,299,648		4,299,724		4,299,692		4,299,147
06 :	4,298,991		4,299,661		4,299,876		4,299,726		4,299,698		4,299,319
	4,298,997		4,299,673		4,300,074		4,299,790		4,299,729		4,299,424
	4,299,003		4,299,678		4,300,088		4,299,804		4,299,733		4,299,510
	4,299,004		4,299,699		4,300,199		4,299,870		4,299,735		4,299,663
	4,299,037		4,299,715		4,300,217		4,299,921		4,299,772		4,299,687
	4,299,045		4,299,750	09 :	4,298,992		4,299,961		4,299,774		4,300,025
	4,299,049		4,299,765		4,299,073		4,300,034		4,299,808		4,300,101
	4,299,066		4,299,778		4,299,095		4,300,092		4,299,854	22 :	4,299,047
	4,299,072		4,299,783		4,299,111		4,300,183		4,299,977		4,299,176
	4,299,094		4,299,787		4,299,152		4,300,186		4,299,979		4,299,578
	4,299,096		4,299,812		4,299,224	13 :	4,299,005		4,299,989		4,299,635
	4,299,102		4,299,840		4,299,308		4,299,046		4,300,008		4,299,811
	4,299,163		4,299,843		4,299,309		4,299,191		4,300,012	23 :	4,299,414
	4,299,171		4,299,847		4,299,371		4,299,275		4,300,021	24 :	4,299,237
	4,299,195		4,299,872		4,299,491		4,299,307		4,300,071		4,299,304
	4,299,222		4,299,878		4,299,538		4,299,343		4,300,076		4,299,349
	4,299,229		4,299,888		4,299,561	17 :	Re.30,791		4,300,084		4,299,492
	4,299,242		4,299,892		4,299,641		4,299,016		4,300,127		4,299,493
	4,299,254		4,299,904		4,299,664		4,299,019		4,300,134		4,299,568
	4,299,258		4,299,916		4,299,817		4,299,041		4,300,154		4,299,608
	4,299,260		4,299,943		4,299,939		4,299,054		4,300,157		4,299,636
	4,299,263		4,299,964		4,300,027		4,299,055	18 :	4,299,025		4,299,813
	4,299,278		4,300,017		4,300,098		4,299,080		4,299,058		4,300,115
	4,299,279		4,300,024		4,300,110		4,299,116		4,299,060		4,300,215
	4,299,290		4,300,041		4,300,116		4,299,130		4,299,081	25 :	4,299,032
	4,299,296		4,300,042		4,300,147		4,299,153		4,299,091		4,299,166
	4,299,326		4,300,046		4,300,188		4,299,161		4,299,154		4,299,234
	4,299,335		4,300,053	10 :	Re.30,792		4,299,165		4,299,306		4,299,236
	4,299,352		4,300,055		4,299,020		4,299,218		4,299,363		4,299,248
	4,299,385		4,300,061		4,299,498		4,299,223		4,299,421		4,299,270
	4,299,395		4,300,064		4,299,949		4,299,256		4,299,614		4,299,327
	4,299,402		4,300,080		4,299,958		4,299,262		4,299,665		4,299,338
	4,299,403		4,300,129		4,299,960		4,299,330		4,299,700		4,299,461
	4,299,407		4,300,159	12 :	4,298,994		4,299,351		4,299,762		4,299,468
	4,299,431		4,300,164		4,299,006		4,299,367		4,299,763		4,299,471
	4,299,440		4,300,167		4,299,024		4,299,386		4,299,862		4,299,704
	4,299,441		4,300,173		4,299,029		4,299,396		4,299,865		4,299,728
	4,299,442		4,300,174		4,299,076		4,299,398		4,299,891		4,299,777
	4,299,446		4,300,176		4,299,219		4,299,417		4,299,953		4,299,794
	4,299,447		4,300,185		4,299,225		4,299,420		4,299,954		4,299,822
	4,299,458		4,300,206		4,299,303		4,299,472		4,300,000		4,299,890

GEOGRAPHICAL INDEX OF RESIDENCE OF INVENTORS

	4,299,913		4,299,919		4,300,073		4,299,823	41 :	4,299,048		4,299,332
	4,299,940		4,299,982		4,300,091		4,299,824		4,299,142		4,299,379
	4,300,051		4,300,005		4,300,107		4,299,875		4,299,136		4,299,392
	4,300,062		4,300,205		4,300,113		4,299,887		4,299,183		4,299,413
	4,300,077	30 :	4,299,178		4,300,143		4,300,187		4,299,247		4,299,436
	4,300,090		4,299,668		4,300,148		4,300,216		4,299,320		4,299,518
	4,300,094	31 :	4,299,174		4,300,152	39 :	Re.30,790	42 :	4,299,015		4,299,540
	4,300,112		4,299,416		4,300,161		4,299,059		4,299,085		4,299,680
	4,300,122	32 :	4,299,388		4,300,196		4,299,115		4,299,086		4,299,693
	4,300,133		4,299,705		4,300,227		4,299,134		4,299,110		4,299,709
	4,300,136	33 :	4,299,251		4,300,231		4,299,151		4,299,216		4,299,711
	4,300,191		4,299,744	35 :	4,298,999		4,299,194		4,299,226		4,299,745
	4,300,193		4,300,139		4,299,168		4,299,213		4,299,239		4,299,781
	4,300,194	34 :	4,299,013		4,299,366		4,299,288		4,299,285		4,299,857
26 :	4,299,017		4,299,036	36 :	4,298,995		4,299,328		4,299,297		4,299,930
	4,299,044		4,299,067		4,299,034		4,299,336		4,299,433		4,299,956
	4,299,063		4,299,119		4,299,040		4,299,341		4,299,612		4,299,957
	4,299,064		4,299,148		4,299,050		4,299,342		4,299,619		4,299,985
	4,299,092		4,299,167		4,299,088		4,299,373		4,299,644		4,300,010
	4,299,099		4,299,181		4,299,101		4,299,423		4,299,658		4,300,043
	4,299,117		4,299,183		4,299,114		4,299,451		4,299,662		4,300,054
	4,299,146		4,299,203		4,299,190		4,299,482		4,299,674		4,300,065
	4,299,160		4,299,204		4,299,198		4,299,511		4,299,675		4,300,097
	4,299,196		4,299,206		4,299,211		4,299,515		4,299,710		4,300,195
	4,299,221		4,299,233		4,299,227		4,299,526		4,299,743		4,300,218
	4,299,235		4,299,272		4,299,245		4,299,546		4,299,747		4,300,237
	4,299,323		4,299,300		4,299,381		4,299,553		4,299,753	49 :	4,299,120
	4,299,324		4,299,345		4,299,391		4,299,554		4,299,761		4,299,177
	4,299,346		4,299,372		4,299,394		4,299,558		4,299,782		4,299,210
	4,299,368		4,299,432		4,299,435		4,299,566		4,299,788		4,299,810
	4,299,415		4,299,488		4,299,436		4,299,583		4,299,801	50 :	4,299,053
	4,299,497		4,299,501		4,299,464		4,299,584		4,299,805		4,299,138
	4,299,527		4,299,594		4,299,466		4,299,589		4,299,867		4,299,866
	4,299,629		4,299,618		4,299,477		4,299,601		4,299,965	51 :	4,299,199
	4,299,671		4,299,650		4,299,478		4,299,613		4,299,969		4,299,525
	4,299,696		4,299,651		4,299,519		4,299,630		4,299,976		4,299,574
	4,299,701		4,299,670		4,299,563		4,299,640		4,300,015		4,299,575
	4,299,851		4,299,677		4,299,576		4,299,697		4,300,066		4,299,625
	4,299,879		4,299,684		4,299,598		4,299,712		4,300,069		4,299,856
	4,299,952		4,299,686		4,299,606		4,299,713		4,300,070		4,299,860
	4,300,026		4,299,691		4,299,632		4,299,722		4,300,083		4,299,864
	4,300,060		4,299,727		4,299,683		4,299,758		4,300,225		4,300,106
	4,300,081		4,299,736		4,299,746		4,299,792		4,300,226		4,300,163
	4,300,120		4,299,739		4,299,769		4,299,826	44 :	4,299,907		4,300,180
	4,300,135		4,299,741		4,299,830		4,299,859		4,300,219	53 :	4,299,043
27 :	4,299,051		4,299,749		4,299,843		4,299,931	45 :	4,299,572		4,299,172
	4,299,079		4,299,756		4,299,848		4,299,932		4,299,591		4,299,197
	4,299,137		4,299,760		4,299,871		4,299,980	47 :	4,299,187		4,299,422
	4,299,150		4,299,773		4,299,894		4,299,987		4,299,571		4,299,611
	4,299,157		4,299,776		4,299,895		4,299,991		4,299,694		4,299,786
	4,299,220		4,299,799		4,299,897		4,299,993		4,299,927		4,299,853
	4,299,283		4,299,806		4,299,898		4,300,030		4,299,933		4,300,130
	4,299,333		4,299,807		4,299,899		4,300,049		4,299,934	54 :	4,299,543
	4,299,363		4,299,815		4,299,901		4,300,075	48 :	4,298,998		4,299,780
	4,299,377		4,299,819		4,299,903		4,300,125		4,299,033		4,299,802
	4,299,479		4,299,825		4,299,923		4,300,141		4,299,100		4,299,928
	4,299,480		4,299,828		4,299,988		4,300,182		4,299,118	55 :	4,299,098
	4,299,604		4,299,906		4,300,033		4,300,189		4,299,128		4,299,253
	4,299,707		4,299,910		4,300,040	40 :	4,299,123		4,299,202		4,299,364
	4,299,874		4,299,968		4,300,108		4,299,240		4,299,243		4,299,411
	4,299,880		4,299,971		4,300,119		4,299,276		4,299,253		4,299,533
	4,300,179		4,299,974		4,300,126		4,299,295		4,299,261		4,299,393
	4,300,208		4,299,981		4,300,149		4,299,397		4,299,277		4,299,653
28 :	4,299,141		4,299,994		4,300,150		4,299,731		4,299,280		4,299,850
29 :	4,299,274		4,299,995		4,300,138		4,299,797		4,299,281		4,300,029
	4,299,350		4,300,009		4,300,181		4,299,951		4,299,282		4,300,067
	4,299,401		4,300,011		4,300,207		4,299,996		4,299,284		4,300,086
	4,299,388		4,300,037		4,300,210		4,299,998		4,299,286		4,300,184
	4,299,770		4,300,039	37 :	4,299,645		4,300,006		4,299,287		
	4,299,814		4,300,068		4,299,647		4,300,220		4,299,294	56 :	4,299,419

DESIGN PATENTS

01 :	261,749		261,816	20 :	261,705		261,768		261,742		261,789
04 :	261,730	08 :	261,738		261,735		261,793		261,743		261,807
06 :	261,700		261,802		261,781	34 :	261,711		261,738	44 :	261,718
	261,703		261,810	21 :	261,797		261,713		261,764		261,729
	261,706	09 :	261,760	25 :	261,744		261,721		261,784		261,771
	261,707	12 :	261,782		261,762		261,724		261,786	47 :	261,809
	261,708		261,796		261,811		261,777		261,787	48 :	261,710
	261,723		261,812	26 :	261,716		261,798		261,791		261,757
	261,728	13 :	261,736		261,741	35 :	261,704		261,817		261,773
	261,731	17 :	261,701		261,750	36 :	261,696		261,818		261,775
	261,761		261,709		261,753		261,697				261,794
	261,763		261,712		261,736		261,699	39 :	261,720		
	261,779		261,780		261,793		261,714		261,737	50 :	261,722
	261,792		261,799	27 :	261,748		261,717		261,819	51 :	261,801
	261,806	18 :	261,746	29 :	261,695		261,725	40 :	261,803	53 :	261,698
	261,813		261,804	33 :	261,745		261,740	42 :	261,739	55 :	261,776

PLANT PATENTS

06 :	4,787		4,788		4,789						

U.S. GOVERNMENT PRINTING OFFICE : O—1981

CHANGE OF ADDRESS FORM

NAME—FIRST, LAST

COMPANY NAME OR ADDITIONAL ADDRESS LINE

STREET ADDRESS

CITY | STATE | ZIP CODE

PLEASE PRINT OR TYPE | (or) COUNTRY

Mail this form to: NEW ADDRESS

Superintendent of Documents
Government Printing Office SSOM
Washington, D.C. 20402

Attach last subscription label here.

SUBSCRIPTION ORDER FORM

SUBSCRIPTION ORDER FORM

ENTER MY SUBSCRIPTION TO:

@ $ Domestic; @ $ Foreign.

NAME—FIRST, LAST

COMPANY NAME OR ADDITIONAL ADDRESS LINE

STREET ADDRESS

CITY | STATE | ZIP CODE

PLEASE PRINT OR TYPE | (or) COUNTRY

☐ Remittance Enclosed (Make checks payable to Superintendent of Documents)

☐ Charge to my Deposit Account No

MAIL ORDER FORM TO:
Superintendent of Documents
Government Printing Office
Washington, D.C. 20402

Vol. 1012 Number 3

OFFICIAL GAZETTE

of the

UNITED STATES PATENT AND TRADEMARK OFFICE

U.S.
DEPARTMENT
OF COMMERCE

Patent
and
Trademark
Office

OFFICIAL GAZETTE of the UNITED STATES PATENT and TRADEMARK OFFICE

November 17, 1981 | Volume 1012 | Number 3

CONTENTS

The following are mailed under direction of the Superintendent of Documents, Government Printing Office, Washington, D.C., 20402, to whom all subscriptions should be made payable and all communications addressed:

THE OFFICIAL GAZETTE (PATENT SECTION), issued weekly, subscription $325.00 per annum for first-class mailing, also available as fourth-class mail at $225.00 domestic; $281.25 foreign; foreign first-class mailing rates will be furnished upon request; single copies each, $5.50 domestic, $6.90 foreign.

THE OFFICIAL GAZETTE (TRADEMARK SECTION), issued weekly, subscription $105.00 per annum, foreign mailing $131.25 per annum; single copies $2.75 each domestic, $3.45 foreign.

GENERAL INFORMATION concerning PATENTS, price $2.25 each.

GENERAL INFORMATION concerning TRADEMARKS, price $1.70 each.

PRINTED COPIES OF PATENTS are furnished by the Patent and Trademark Office at 50 cents each; PLANT PATENTS in color, $1.00 each; copies of TRADEMARKS AND DESIGN PATENTS at 20 cents each. Address orders to the Commissioner of Patents and Trademarks, Washington, D.C., 20231.

Printing authorized by Section 11(a)3 of Title 35, U.S. Code P.T.O.

PATENT AND TRADEMARK OFFICE NOTICES

Patent Cooperation Treaty Information

For information concerning the PCT, consult Chapter 1800 of the Manual of Patent Examining Procedure and notices 90-95 in the consolidated listing of notices appearing in the Official Gazette of Jan. 6, 1981.

The PCT fees in effect after May 19, 1981 are as follows:

Transmittal fee	$ 35.00
Search fee	300.00
International Basic Fee (for the first 30 sheets of an international application)	215.00
Basic Supplemental Fee (for each sheet over 30)	4.00
International Designation Fee (for each State for which a national patent is sought, or group of States for which the same regional patent is sought)	50.00

RENE D. TEGTMEYER,
Assistant Commissioner for Patents.

REISSUE APPLICATIONS FILED

Notice under 37 CFR 1.11(b). The reissue applications listed below are open to inspection by the general public in the indicated Examining Groups and copies may be obtained by paying the fee therefor (37 CFR 1.21(b)).

4,177,077, Re. S.N. 274,911, Filed June 18, 1981, Cl. 106/50, GLASS COMPOSITION FOR FIBERIZATION, Lawrence V. Gagin, Owner of Record: *Johns-Manville Corp., Jefferson County, Colo.*, Attorney or Agent: Richard P. Barnard, et al., Ex. Gp.: 113

4,206,834, Re. S.N. 276,065, Filed June 22, 1981, Cl. 188/341, BRAKE ASSEMBLY, William J. Williams, Owner of Record: *Rockwell International Corp., Pittsburgh, Pa.*, Attorney or Agent: John R. Bronaugh, et al., Ex. Gp.: 315

4,214,131, Re. S.N. 276,204, Filed June 22, 1981, Cl. 179/84T ELECTRONIC AUDIO SIGNALLING DEVICE FOR TELEPHONES, Terry Dwane Bush, et al., Owner of Record: *Floyd Bell Associates, Inc., Columbus, Ohio*, Attorney or Agent: Gerald L. Smith, et al., Ex. Gp.: 234

4,236,845, Re. S.N. 275,445, Filed June 19, 1981, Cl. 403/144, SOCKET ASSEMBLY FOR A BALL AND SOCKET COUPLING, Lawther O. Smith, et al., Owner of Record: *Gas Spring Corp., Colmar, Pa.*, Attorney or Agent: Granville M. Brumbaugh, et al., Ex. Gp.: 353

4,264,083, Re. S.N. 276,572, Filed June 23, 1981, Cl. 280/154.509, SPLASH GUARD, Kenneth S. Matthew, et al., Owner of Record: *Custom Accessories, Inc., Lincolnwood, Ill.*, Attorney or Agent: Sidney Wallenstein, et al., Ex. Gp.: 316

REQUESTS FOR REEXAMINATION FILED

Notice under 37 CFR 1.11(c). The requests for reexamination listed below are open to inspection by the general public in the indicated Examining Groups. Copies of the requests and related papers may be obtained by paying the fee therefor established in the Rules (37 CFR 1.21(b)).

In the event correspondence to the patent owner is not received, this notice will be considered to be constructive notice to the patent owner and reexamination will proceed (37 CFR 1.248(a)(5) and 1.525(b)).

3,854,664, Reexam. No. 90/000,089, Requested: Oct. 15, 1981, Cl. 239/206, SPRINKLER SYSTEMS, Edwin J. Hunter, Owner of Record: *Toro Manufacturing Corp.*, Attorney or Agent: James W. Miller, Ex. Gp.: 313, Requester: The Toro Co., of Minneapolis, Minn.

3,952,741, Reexam. No. 90/000,085, Requested: Oct. 14, 1981, Cl. 128/260, CONTROLLED RELEASE DELIVERY SYSTEM BY AN OSMOTIC BURSTING MECHANISM, Richard W. Baker, Owner of Record: *The Chase Manhatten Bank, Natl. Assoc., New York, N.Y.*, Attorney or Agent: Richard W. Baker, Ex. Gp.: 330, Requester: Harold C. Wegner, Washington, D.C.

4,016,880, Reexam. No. 90/000,087, Requested: Oct. 14, 1981, Cl. 128/260, OSMOTICALLY DRIVEN ACTIVE AGENT DISPENSER, Felix Theeuwes, et al., Owner of Record: *The Chase Manhattan Bank, Natl. Assoc., New York, N.Y.*, Attorney or Agent: Thomas E. Ciotti, Ex. Gp.: 330, Requester: Harold C. Wegner, Washington, D.C.

4,177,256, Reexam. No. 90/000,086, Requested: Oct. 14, 1981, Cl. 424/22, OSMOTIC BURSTING DRUG DELIVERY DEVICE, Alan S. Michaels, et al., Owner of Record: *Alza Corp., Palo Alto, Calif.*, Attorney or Agent: Paul L. Sabatine, Ex. Gp.: 120, Requester: Harold C. Wegner, Washington, D.C.

4,181,285, Reexam. No. 90/000,090, Requested: Oct. 15, 1981, Cl. 249/61, FREEZING MOULD BAG, Erling Vangedal-Nielsen, Owner of Record: *Inventor*, Attorney or Agent: Ronald D. Cohn, Ex. Gp.: 147, Requester: E—Z Por Corp., Wheeling, Ill.

4,182,755, Reexam. No. 90/000,088, Requested: Oct. 15, 1981, Cl. 424/147, FEED INTAKE CONTROL OF ANIMALS, Larry C. McNeff, Owner of Record: *Cargill, Inc., Minneapolis, Minn.*, Attorney or Agent: William E. Anderson, et al., Ex. Gp.: 210, Requester: Central Soya Co., Inc., Fort Wayne, Ind.

Service by Publication

A petition to cancel each of the registrations identified below having been filed, and the notice of such proceedings sent by registered mail to each registrant at the last known address having been returned by the Post Office as undeliverable, notice is hereby given that unless the registrants listed herein, their assigns or legal representatives, shall enter an appearance within thirty days from the date of this publication, the cancellation will be proceeded with as in the case of default.

Wiesenberger Services, Inc., New York, N.Y. Reg. No. 1,024,847, Canc. No. 12,791.

W. H. Feronce Co. Philadelphia, Pa., Reg. No. 1,038,381, Canc. No. 12,994.

EVELYN R. LOPEZ,
Clerk, Trademark Trial and Appeal Board.
For MARGARET M. LAURENCE,
Assistant Commissioner for Trademarks.

PATENT NOTICES

Certificates of Correction for the Week of Nov. 17, 1981

Re. 30,527	4,223,058	4,264,277	4,277,510
D. 258,302	4,223,073	4,264,373	4,277,980
D. 259,549	4,223,083	4,264,531	4,278,009
D. 259,788	4,225,507	4,264,882	4,278,266
3,765,763	4,228,465	4,265,117	4,278,486
4,028,350	4,229,530	4,266,749	4,278,538
4,047,608	4,231,083	4,266,977	4,278,567
4,064,935	4,231,229	4,267,372	4,278,604
4,069,541	4,232,177	4,267,464	4,279,424
4,073,808	4,233,318	4,267,816	4,279,863
4,081,031	4,233,327	4,268,208	4,279,934
4,081,478	4,234,931	4,268,302	4,280,021
4,096,442	4,235,557	4,268,491	4,280,260
4,102,840	4,236,501	4,268,823	4,280,399
4,137,308	4,238,528	4,269,282	4,280,583
4,137,799	4,239,623	4,269,851	4,281,130
4,138,235	4,241,784	4,270,119	4,281,157
4,148,838	4,243,523	4,270,353	4,281,169
4,155,143	4,244,507	4,270,909	4,281,228
4,156,872	4,245,111	4,270,934	4,281,442
4,157,269	4,246,268	4,270,968	4,281,686
4,161,142	4,247,389	4,271,393	4,282,034
4,162,803	4,248,860	4,272,053	4,282,070
4,163,561	4,248,992	4,272,158	4,282,365
4,163,970	4,249,002	4,272,636	4,282,410
4,170,189	4,250,078	4,272,861	4,282,472
4,170,581	4,252,168	4,273,039	4,282,935
4,173,129	4,252,834	4,273,157	4,283,322
4,181,941	4,253,899	4,273,703	4,283,351
4,182,417	4,254,036	4,273,888	4,283,531
4,184,231	4,255,240	4,274,935	4,283,558
4,187,548	4,256,545	4,275,007	4,283,954
4,189,290	4,257,261	4,275,302	4,284,396
4,198,131	4,257,701	4,275,818	4,285,465
4,202,611	4,258,790	4,275,913	4,285,609
4,202,811	4,258,979	4,276,036	4,285,816
4,204,701	4,258,987	4,276,061	4,285,845
4,206,171	4,259,628	4,276,133	4,286,067
4,208,652	4,260,649	4,276,176	4,286,115
4,212,968	4,261,409	4,276,246	4,286,340
4,215,011	4,261,754	4,276,257	4,286,378
4,215,742	4,261,929	4,276,326	4,287,414
4,219,410	4,261,950	4,276,708	4,287,675
4,222,209	4,262,221	4,277,092	4,288,201
4,222,223	4,263,239	4,277,436	4,288,855

Disclaimers

3,481,422.—*Robert S. Mueller*, Southfield and *Martin W. Uitvlugt*, Battlecreek, Mich. SPEED CONTROL APPARATUS FOR AN AUTOMOTIVE VEHICLE. Patent dated Dec. 2, 1969. Disclaimer filed Sept. 3, 1981, by the assignee, *Eaton Corp.*

Hereby enters this disclaimer to claims 1 through 13 of said patent.

3,845,176.—*W. David Weir*, Levittown, Pa. PROCESS FOR MAKING PHOSPHONOTHIOUREIDE S. Patent dated Oct. 29, 1974. Disclaimer filed Mar. 31, 1981, by the assignee, *Beecham, Inc.*

Hereby enters this disclaimer to all of the claims of said patent.

3,997,676.—*Momofuku Ando*, Osaka, Japan. INSTANT-COOKING CUPPED NOODLES AND A METHOD OF PRODUCING THE SAME. Patent dated Dec. 14, 1976. Disclaimer filed July 19, 1978, by the assignee, *Nissin Shokuhin Kaisha, Ltd.*

Hereby enters this disclaimer to claims 3 and 6 of said patent.

4,042,533.—*Wilfrid G. Shaw*, Lyndhurst, *David B. Terrill*, Bedford, and *David R. Woodbury*, Bedford Heights, Ohio. PRODUCING UNSATURATED ALIPHATIC ACIDS. Patent dated Aug. 16, 1977. Disclaimer filed Aug. 3, 1981, by the assignee, *The Standard Oil Co.*

Hereby enters this disclaimer to claims 1, 2, 4 and 5 of said patent.

4,086,336.—*Ronald P. Owen*, Warminster, and *George A. Miller*, Glenside, Pa., and *Charles M. Schneider*, Cullowhee, N.C. PHOSPHONOTHIOUREIDE ANTHELMINTICS. Patent dated Apr. 25, 1978. Disclaimer filed Mar. 31, 1981, by the assignee, *Beecham, Inc.*

Hereby enters this disclaimer to all of the claims of said patent.

4,143,467.—*James R. Erspamer, John R. Jackson, Roger A. Misch* and *John L. Waldrop*, Phoenix, Ariz. SEMI-AUTOMATIC SELFCONTAINED MAGNETIC AZIMUTH DETECTOR CALIBRATION APPARATUS AND METHOD. Patent dated Mar. 13, 1979. Disclaimer filed Aug. 26, 1981, by the assignee, *Sperry Corp.*

Hereby enters this disclaimer to claims 1, 4, 5, 6 and 25 of said patent.

4,154,654.—*Jean-Claude Campagne*, Saint-Vincent-La-Chatre, France. METHOD FOR PREPARING POLY SACCHARIDES. Patent dated May 15, 1979. Disclaimer filed June 19, 1981, by the assignee, *Rhone-Poulenc Industries.*

Hereby enters this disclaimer to claims 1-10 of said patent.

4,208,321.—*Stanley Robert Sandler*, Springfield, Del. POLYAMIDE RESINS FLAME RETARDED BY POLY(METAL PHOSPHINATE)S. Patent dated June 17, 1980. Disclaimer filed Aug. 20, 1981, by the assignee, *Pennwalt Corp.*

Hereby enters this disclaimer to all of the claims of said patent.

4,208,322.—*Stanley Robert Sandler*, Springfield, Del. POLYESTER POLYAMIDE RESINS FLAME RETARDED BY POLY(METAL PHOSPHINATE)S. Patent dated June 17, 1980. Disclaimer filed Aug. 20, 1981, by the assignee, *Pennwalt Corp.*

Hereby enters this disclaimer to all of the claims of said patent.

4,233,896.—*Paul H. Hamisch, Jr.*, Franklin, Ohio. LABEL PRINTING AND APPLYING APPARATUS. Patent dated Nov. 18, 1980. Disclaimer filed Sept. 8, 1981, by the assignee, *Monarch Marking Systems, Inc.*

Hereby enters this disclaimer to claim 3 of said patent.

Dedication

4,067,071.—*Murray Altman*, Scarsdale, *Richard Altman*, Bardonia, and *Arthur Roberts*, Westbury, N.Y. BATHTUB, WALL AND CEILING LINER ASSEMBLY. Patent dated Jan. 10, 1978. Dedication filed Feb. 2, 1981, by the assignee, *Thermasol, Ltd.*

Hereby dedicates to the Public the entire term of said patent.

Reference Collections of U.S. Patents Available for Public Use in Patent Depository Libraries

The libraries listed herein, designated as patent depository libraries, receive current issues of U.S. Patents and maintain collections of earlier issued patents. The scope of these collections varies from library to library, ranging from patents of only recent months or years in some libraries to all or most of the patents issued since 1870, or earlier, in other libraries.

These patent collections are open to public use and each of the patent depository libraries, in addition, offers the publications of the patent classification system (e.g. The Manual of Classification, Index to the U.S. Patent Classification, Classification Definitions, etc.) and provides technical staff assistance in their use to aid the public in gaining effective access to information contained in patents. With one exception, as noted in the table following, the collections are organized in patent number sequence.

Depending upon the library, the patents may be available in microfilm, in bound volumes of paper copies, or in some combination of both. Facilities for making paper copies from either microfilm in reader-printers or from the bound volumes in paper-to-paper copies are generally provided for a fee.

Owing to variations in the scope of patent collections among the patent depository libraries and in their hours of service to the pnblic, anyone contemplating use of the patents at a particular library is advised to contact that library, in advance, about its collection and hours, so as to avert possible inconvenience.

State	*Name of Library*	*Telephone Contact*
Alabama	Birmingham Public Library	(205) 254-2555
Arizona	Tempe: Science Library, Arizona State University	(602) 965-7607
California	Los Angeles Public Library	(213) 626-7555 Ext. 273
	Sacramento: California State Library	(916) 322-4572
	Sunnyvale: Patent Information Clearinghouse*	(408) 738-5580
Colorado	Denver Public Library	(303) 573-5152 Ext. 222
Delaware	Newark: University of Delaware	(302) 738-2238
Georgia	Atlanta: Price Gilbert Memorial Library, Georgia Institute of Technology	(404) 894-4519
Illinois	Chicago Public Library	(312) 269-2814
Louisiana	Baton Rouge: Troy H. Middleton Library, Louisiana State University	(504) 388-2570
Massachusetts	Boston Public Library	(617) 536-5400 Ext. 265
Michigan	Detroit Public Library	(313) 833-1450
Minnesota	Minneapolis Public Library & Information Center	(612) 372-6552
Missouri	Kansas City: Linda Hall Library	(816) 363-4600
	St. Louis Public Library	(314) 241-2288 Ext. 214, 215
Nebraska	Lincoln: University of Nebraska-Lincoln, Engineering Library	(402) 472-3411
New Hampshire	Durham: University of New Hampshire Library	(603) 862-1777
New Jersey	Newark Public Library	(201) 733-7814
New York	Albany: New York State Library	(518) 474-5125
	Buffalo and Erie County Public Library	(716) 856-7525 Ext. 267
	New York Public Library (The Research Libraries)	(212) 790-6291
North Carolina	Raleigh: D. H. Hill Library, N.C. State University	(919) 737-3280
Ohio	Cincinnati & Hamilton County, Public Library of	(513) 369-6936
	Cleveland Public Library	(216) 623-2870
	Columbus: Ohio State University Libraries	(614) 422-6286
	Toledo/Lucas County Public Library	(419) 255-7055 Ext. 212
Oklahoma	Stillwater: Oklahoma State University Library	(405) 624-6546
Pennsylvania	Philadelphia: Franklin Institute Library	(215) 448-1321**
	Pittsburgh: Carnegie Library of Pittsburgh	(412) 622-3138
	University Park: Pattee Library, Pennsylvania State University	(814) 865-4861
Rhode Island	Providence Public Library	(401) 521-7722 Ext. 226
Tennessee	Memphis & Shelby County Public Library and Information Center	(901) 528-2957
Texas	Dallas Public Library	(214) 748-9071
	Houston: The Fondren Library, Rice University	(713) 527-8101 Ext. 2587
Washington	Seattle: Engineering Library, University of Washington	(206) 543-0740
Wisconsin	Madison: Kurt F. Wendt Engineering Library, University of Wisconsin	(608) 262-6845
	Milwaukee Public Library	(414) 278-3043

*Collection organized by subject matter.

**Call only between the hours of 10:00 a.m. and 5:00 p.m.

PATENT EXAMINING CORPS

RENE D. TEGTMEYER, Assistant Commissioner

WILLIAM FELDMAN, Deputy Assistant Commissioner

CONDITION OF PATENT APPLICATIONS AS OF September 5, 1981

PATENT EXAMINING GROUPS	Actual Filing Date of Oldest New Case Awaiting Action
CHEMICAL EXAMINING GROUPS	
GENERAL CHEMISTRY AND PETROLEUM CHEMISTRY, GROUP 110—D. E. TALBERT, Director Inorganic Compounds; Inorganic Compositions; Organo-Metal and Organo-Metalloid Chemistry; Metallurgy; Metallurgical Apparatus; Metal Stock; Electro Chemistry; Batteries; Hydrocarbons; Mineral Oil Technology; Lubricating Compositions; Gaseous Compositions; Fuel and Igniting Devices.	5-12-80
GENERAL ORGANIC CHEMISTRY, GROUP 120—C. E. VAN HORN, Director Heterocyclic Amides; Alkaloids; Azo; Sulfur; Misc. Esters; Carbohydrates; Herbicides; Poisons; Medicines; Cosmetics; Steroids; Oxo and Oxy; Quinones; Acids; Carboaylic Acid Esters; Acid Anhydrides; Acid Halides.	10-11-79
HIGH POLYMER CHEMISTRY, PLASTICS AND MOLDING, GROUP 140—J. O. THOMAS, JR., Director Synthetic Resins; Rubber; Proteins; Macromolecular Carbohydrates; Mixed Synthetic Resin Compositions; Synthetic Resins With Natural Polymers and Resins; Reclaiming; Pore-Forming; Compositions (Part) e.g., Coating; Molding; Ink; Prosthdontics; Adhesive and Abrading Compositions; Molding, Shaping, Treating Process, and Apparatus Therefor; Irradiation (Part); Bleaching; Dyeing; Leather, Fur and Textile Treating Compositions.	7-09-80
COATING, LAMINATING AND PHOTOGRAPHY, GROUP 160—S. N. ZAHARNA, Director Coating: Processes, Apparatus and Misc. Products; Laminating Methods and Apparatus; Stock Materials; Adhesive Bonding; Special Chemical Manufactures; Special Utility Compositions; and Photography.	1-12-80
SPECIALIZED CHEMICAL INDUSTRIES AND CHEMICAL ENGINEERING, GROUP 170—R. F. WHITE, Director Fertilizers; Foods; Fermentation; Analytical Chemistry; Reactors; Sugar and Starch; Paper Making; Glass Manufacture; Gas; Heating and Illuminating; Cleaning Processes; Liquid Purification; Distillation; Preserving; Liquid, Gas, and Solid Separation; Gas and Liquid Contact Apparatus; Refrigeration; Concentrative Evaporators; Mineral Oils Apparatus; Misc. Physical Processes.	5-06-80
ELECTRICAL EXAMINING GROUPS	
INDUSTRIAL ELECTRONICS, PHYSICS AND RELATED ELEMENTS, GROUP 210—S. W. ENGLE, Director Generation and Utilization; General Applications; Conversion and Distribution; Heating and Related Art Conductors; Switches; Photography; Motion Pictures; Horology; Acoustics; Recorders; Weighing Scales.	1-07-80
SPECIAL LAWS ADMINISTRATION, GROUP 220—KENNETH L. CAGE, Director Ordnance, Firearms and Ammunition; Lubrication; Illumination; Nuclear Reactors; Acoustics, Communications, Optics; Radar; Directional Radio; Torpedoes; Seismic Exploring; Cathode Ray Tube Circuitry; Cryptography; Laser Devices; Radioactive Materials; Powder Metallurgy, Rocket Fuels; Special, Fuel, Explosive and Thermic Compositions; Thermal and Photoelectric Batteries.	1-18-80
INFORMATION TRANSMISSION, STORAGE, AND RETRIEVAL, GROUP 230—VACANT Communications; Multiplexing Techniques; Television; Facsimile; Data Processing, Computation and Conversion; Storage Devices and Related Arts.	1-23-80
RECEPTACLES, SANITATION AND CLEANING, WINDING, AND MEASURING, GROUP 240—A. L. SMITH, Director Receptacles; Bearings; Joint Packing; Conduits; Switches; Presses; Plumbing Fixtures; Textile Spinning; Cleaning; Food Treating; Agitating; Centrifugal Separating; Geometrical Instruments; Sound Recording; Image Projectors; Web Feeding; Winding and Reeling; Cable Hoists; Measuring and Testing; Indicating; Fluent Material Handling.	12-07-79
ELECTRONIC COMPONENT SYSTEMS AND DEVICES, GROUP 250—S. S. MATTHEWS, Director Semi-Conductor and Space Discharge Systems and Devices; Electronic Component Circuits; Wave Transmission Lines and Networks; Optics; Radiant Energy; Measuring.	4-20-79
DESIGN, GROUP 290—KENNETH L. CAGE, Director Industrial Arts; Household, Personal and Fine Arts.	2-08-80
MECHANICAL EXAMINING GROUPS	
HANDLING AND TRANSPORTING MEDIA, GROUP 310—B. R. GRAY, Director Conveyors; Hoists; Elevators; Article Handling Implements; Store Service; Sheet Feeding; Dispensing; Fluid Sprinkling; Fire Extinguishers; Coin Handling; Check Controlled Apparatus; Classifying and Assorting Solids; Boats; Ships; Aeronautics; Motor and Land Vehicles and Appurtenances; Brakes; Railways and Railway Equipment.	1-09-80
MATERIAL SHAPING; ARTICLE MANUFACTURING, TOOLS, GROUP 320—M. M. NEWMAN, Director Manufacturing Processes, Assembling, Combined Machines, Special Article Making; Metal Deforming; Sheet Metal and Wire Working; Metal Fusion-Bonding, Metal Founding; Machine Tools for Shaping or Dividing; Work and Tool Holders, Woodworking; Tools; Cutlery; Jacks; Fishing, Etc.; Butchering; and Books and Printed Matter.	6-12-79
AMUSEMENT, HUSBANDRY, PERSONAL TREATMENT, INFORMATION, GROUP 330—R. E. AEGERTER, Director Amusement and Exercising Devices; Projectors; Animal and Plant Husbandry; Plants; Harvesting; Earth Working and Excavating; Tobacco; Artificial Body Members; Dentistry; Jewelry; Surgery; Toiletry; Printing; Typewriters; Information Dissemination.	1-30-80
HEAT, POWER, AND FLUID ENGINEERING, GROUP 340—D. J. STOCKING, Director Power Plants; Combustion Engines; Fluid Motors; Reaction Motors; Pumps; Rotary Engines and Pumps; Heat Generation and Exchange; Refrigeration; Ventilation; Drying; Temperature and Humidity Regulation; Couplings; Gearing; Fluid Handling and Control; Lubrication.	10-22-79
GENERAL CONSTRUCTIONS, TEXTILES, MINING AND GEARING, GROUP 350—G. M. FORLENZA, Director Building Structures; Racks; Cabinets; Closures; Supports; Furniture; Fasteners; Locks; Pipe Couplings; Joints; Miscellaneous Hardware; Textiles; Sewing Machines; Apparel; Footwear; Earth Engineering; Earth Drilling; Mining; Wells; Roads; Bridges; Tool Driving; Gearing; Machine Elements; Clutches.	2-19-80

Expiration of patents: The patents within the range of numbers indicated below expire during September 1981, except those which may have expired earlier due to shortened terms under the provisions of Public Law 690, 79th Congress, approved August 8, 1946 (60 Stat. 940) and Public Law 619, 83rd Congress, approved August 23, 1954 (68 Stat. 764), or which may have had their terms curtailed by disclaimer under the provisions of 35 U.S.C. 253. Other patents, issued after the dates of the range of numbers indicated below, may have expired before the full term of 17 years for the same reasons, or have lapsed under the provisions of 35 U.S.C. 151.

Patents .... Numbers 3,146,459 to 3,151,328, inclusive

Plant Patents .... Numbers 2,444 to 2,448, inclusive

Patent Cooperation Treaty Update

The following notice is an updating of information concerning the Patent Cooperation Treaty (PCT) relating to the following items:

I. Fee Increase effective January 1, 1982.
II. Ratification by Belgium and listing of PCT member countries.
III. Amendments to Regulations under the PCT effective on October 1, 1981.
IV. Modification of the Administrative Instructions under the PCT.
V. Revised Request form PCT/RO/101.
VI. Completed sample revised Request form.

I. *Fee increase effective January 1, 1982*

The PCT Assembly has established the following international fees to become effective on January 1, 1982.

International Basic Fee (for the first 30 sheets of an international application)	$270.00
Basic Supplemental Fee (for each sheet over 30)	6.00
International Designation Fee (for each State for which a national patent is sought, or for each group of States for which the same regional patent is sought	65.00

II. *Ratification by Belgium and listing of PCT Member Countries*

The Patent and Trademark Office has received notification from the World Intellectual Property Organization (WIPO) that Belgium deposited its ratification of the PCT on September 14, 1981. Therefore, according to PCT Article 63(2), Belgium may be designated in international applications filed on and after December 14, 1981. Belgium indicated in its ratification that it can only be designated by way of regional protection through the European Patent Convention. This provision is similar to the action taken by France. Therefore, any designation of Belgium in an international application will be considered to be a designation of Belgium for a Regional Patent.

III. *Amendments to the Regulations under the PCT*

Adopted by the Assembly of the International Patent Cooperation Union (PCT Union) on July 3, 1981.

Table of Amendments

Rule 3.3(a)	Amended*
Rule 4.1(c)	Amended
Rule 4.4(c)	Amended*
Rule 4.4(d)	Amended*
Rule 4.6(b)	Amended*
Schedule of fees	Amended**

* With effect on and from October 1, 1981.
** With effect on and from January 1, 1982.

Amendments
Rule 3
The Request (Form)

3.1 [No change]
3.2 [No change]
3.3 *Check List*
(a) The printed form shall contain a list which, when filled in, will show:
(i) [No change]

List of PCT Member States

State	Ratification or Accession	Date of Ratification or Accession	Date From Which State May Be Designated
(1) Central African Republic*	Accession	15 September 1971	01 June 1978
(2) Senegal*	Ratification	08 March 1972	01 June 1978
(3) Madagascar	Ratification	27 March 1972	01 June 1978
(4) Malawi	Accession	16 May 1972	01 June 1978
(5) Cameroon*	Accession	15 March 1973	01 June 1978
(6) Chad*	Accession	12 February 1974	01 June 1978
(7) Togo*	Ratification	28 January 1975	01 June 1978
(8) Gabon*	Accession	06 March 1975	01 June 1978
(9) United States of America	Ratification	26 November 1975	01 June 1978
(10) Germany, Federal Republic of**	Ratification	19 July 1976	01 June 1978
(11) Congo*	Accession	08 August 1977	01 June 1978
(12) Switzerland**	Ratification	14 September 1977	01 June 1978
(13) United Kingdom**	Ratification	24 October 1977	01 June 1978
(14) France**	Ratification	25 November 1977	01 June 1978
(15) Soviet Union	Ratification	29 December 1977	01 June 1978
(16) Brazil	Ratification	09 January 1978	01 June 1978
(17) Luxembourg**	Ratification	31 January 1978	01 June 1978
(18) Sweden**	Ratification	17 February 1978	01 June 1978
(19) Japan	Ratification	01 July 1978	01 October 1978
(20) Denmark	Ratification	01 September 1978	01 December 1978
(21) Austria**	Ratification	23 January 1979	23 April 1979
(22) Monaco	Ratification	22 March 1979	22 June 1979
(23) Netherlands**	Ratification	10 April 1979	10 July 1979
(24) Romania	Accession	23 April 1979	23 July 1979
(25) Norway	Ratification	01 October 1979	01 January 1980
(26) Liechtenstein**	Accession	19 December 1979	19 March 1980
(27) Australia	Accession	31 December 1979	31 March 1980
(28) Hungary	Ratification	27 March 1980	27 June 1980
(29) Democratic People's Republic of Korea (North Korea)	Accession	08 April 1980	08 July 1980
(30) Finland	Ratification	01 July 1980	01 October 1980
(31) Belgium**	Ratification	14 September 1981	14 December 1981

*Members of African Intellectual Property Organization (OAPI) regional patent system. Only regional patent protection is available for OAPI Member States. A designation of any State is an indication that all OAPI States have been designated. Note: only one designation fee is due regardless of the number of OAPI member states designated.

**Members of European Patent Convention (EPC) regional patent system. Either national patents or European patents for member States are available through PCT, except for France and Belgium, for which only European patents are available if PCT is used. If regional protection is desired for one or more States, the indication "regional patent" must follow the designation of the State or States. Note: only one designation fee is due if the regional patent protection is sought for several States.

(ii) whether or not the international application as filed is accompanied by a power of attorney (i.e., a document appointing an agent or a common representative), a copy of a general power of attorney, a priority document, a document relating to the payment of fees, and any other document (to be specified in the check list);
(iii) [No change]
(b) [No change]
3.4 [No change]

Rule 4
The Request (Contents)

4.1 *Mandatory and Optional Contents: Signature*
(a) [No change]
(b) [No change]
(c) The request may contain
(i) indications concerning the inventor where the national law of none of the designated States requires that the name of the inventor be furnished at the time of filing a national application,
(ii) a request to the receiving Office to transmit the priority document to the International Bureau where the application whose priority is claimed was filed with the national Office or intergovernmental authority which is the receiving Office.
(d) [No change]
4.2 [No change]
4.3 [No change]
4.4 Names and Addresses
(a) [No change]
(b) [No change]
(c) Addresses shall be indicated in such a way as to satisfy the customary requirements for prompt postal delivery at the indicated address and, in any case, shall consist of all the relevant administrative units up to, and including, the house number, if any. Where the national law of the designated State does not require the indication of the house number, failure to indicate such number shall have no effect in that State. It is recommended to indicate any telegraphic and teleprinter address and telephone number of the agent or common representative or, in the absence of the designation of an agent or common representative in the request, of the applicant first named in the request.
(d) For each applicant, inventor, or agent, only one address may be indicated, except that, if no agent has been appointed to represent the applicant, or all of them if more than one, the applicant or, if there is more than one applicant, the common representative, may indicate, in addition to any other address given in the request, an address to which notification shall be sent.
4.5 [No change]
4.6 *The Inventor*
(a) [No change]
(b) If the applicant is the inventor, the request, in lieu of the indication under paragraph (a), shall contain a statement to that effect.
(c) [No change]
4.7 to 4.17 [No change]

SCHEDULE OF FEES

Fees	*Amounts*
1. Basic Fee: (Rule 15.2(a)) if the international application contains no more than 30 sheets	527 Swiss francs
if the internatinnal application contains more than 30 sheets	527 Swiss francs plus 11 Swiss francs for each sheet in excess of 30 sheets
2. Designation Fee (Rule 15.2(a))	127 Swiss francs
3. Handling Fee (Rule 57.2(a))	162 Swiss francs
4. Supplement to the Handling Fee (Rule 57.2(b))	162 Swiss francs
Surcharges	
5. Surcharge for late payment: (Rule 16*bis*.2(a))	Minimum: 200 Swiss francs Maximum: 500 Swiss francs

IV. *Modifications of the administrative instructions under the PCT*

MODIFICATION

The Director General of the World Intellectual Property Organization has modified the Administrative Instructions under the PCT pursuant to Rule 89.2 of the PCT Regulations as set out below.

Table of Modifications

Section 201	modified*
Section 202	modified*
Section 203	modified*
Section 206	deleted*
Section 208	new**
Section 209	new**
Section 503	modified*
Section 505	modified*
Section 507	modified*

*With effect on and from October 1, 1981.
**With effect on and from August 6, 1981

Section 201

Names of States: Cancellation of Designations

(a) The name of any State referred to in the request shall be indicated either by the full name of the State or by a generally accepted short title which, if the indications are in English or French, shall be as appears in Annex A. If the name is inserted in the request by the applicant for the purpose of designating that State, the receiving Office, or the International Bureau where the receiving Office fails to do so, shall insert, preferably before the name of the State, the two-letter country code identifying the State, as appears in Annex B.
(b) [No change]

Section 202

Kind of Protection

(a) Where the applicant wishes his application to be treated in any designated State as an application not for a patent but for the grant of another kind of protection referred to in Article 43, he shall make the indication in the request referred to in Rule 4.12(a) by inserting the words "inventor's certificate," "utility certificate," "utility model" (or "petty patent" for Australia), "patent of addition," "certificate of addition," "inventor's certificate of addition" or "utility certificate of addition," or their equivalent in the language of the international application, immediately after the indication of the said State.
(b) Where, in respect of the designation of the Federal Republic of Germany, the applicant is seeking two kinds of protection under Article 44, he shall make the indication referred to in Rule 4.12(b) by inserting, immediately after the indication of the Federal Republic of Germany and in the language of the international application, one of the two following indications:
(i) "and utility model";
(ii) "and auxiliary utility model."

Section 203

Regional Patents

(a) If the applicant wishes to obtain a regional patent in respect of any designated State and the request form does not contain preprinted indications permitting the applicant to make the indication in the request referred to in Rule 4.1(b)(iv), the applicant shall make the said indication by inserting the words "regional patent," or their equivalent in the language of the international application, immediately after the indication of the said State or, where an indication has been made under Section 202, after that indication, provided that:

(i) where Article 4(1)(ii), third clause, applies, and not all the States party to the regional treaty have been designated, the international application shall be treated as if all those States had been designated and as if the designations of all such States contained the said words, whether the said designations contained an indication of the wish to obtain a regional patent or, according to Article 4(1)(ii), fourth clause, are to be treated as containing such indication;

(ii) where the national law of any designated State contains a provision as referred to in Article 45(2), the International Bureau shall, according to Article 4(1)(ii), fourth clause, treat the designation as if it contained the said words even where the applicant failed to indicate them.

(b) The applicant may, instead of the words "regional patent" referred to in paragraph (a), use other words to the same effect; such words may include a reference to a patent to be granted by the European Patent Office under the Convention of the Grant of European Patents done at Munich on October 5, 1973 ("European patent"), where the regional patent which the applicant wishes to obtain is a European patent.

(c) An indication, in respect of the designation of Liechtenstein or Switzerland, or both, of the wish to obtain a regional patent shall be taken as indicating a wish to obtain a European patent in respect of those States, whereas the absence of any indication of the wish to obtain a regional patent in respect of such a designation shall be taken as indicating a wish to obtain a patent granted by the Swiss Intellectual Property Office in respect of those States.

Section 206

[Deleted]

Section 208

Application of Moneys Received by the Receiving Office in Certain Cases: Charging of Deficiency to the International Bureau

(a) A receiving Office which has not excluded the operation of Rules 16*bis*.1 and 16*bis*.2 shall, to the extent that it has received instructions from the applicant as to the fees to which it shall apply moneys received by it from the applicant, apply those moneys accordingly.

(b) Where a receiving Office referred to in paragraph (a) receives moneys from the applicant which, together with any other moneys so received, are not sufficient to cover in full the transmittal fee (if any), the international fee and the search fee (if any), the receiving Office shall, to the extent that it has not received instructions from the applicant as to the fees to which it shall apply the moneys which are available for the purposes, apply those moneys in payment, successively, of the fees set out below to the extent that they are due and unpaid and in the order in which they appear below:

(i) the transmittal fee;

(ii) the basic fee part of the international fee;

(iii) the search fee;

(iv) the designation fee part of the international fee.

(c) Where, pursuant to paragraph (b), the receiving Office applies moneys in payment of the designation fees, it shall apply them to those fees successively in the order in which the designations appear in the international application up to and including the last designation, the fee for which is fully covered by the moneys.

(d)(i) When notifying the International Bureau pursuant to Rule 16*bis*.1(d) as to amounts charged to that Bureau pursuant to Rule 16*bis*.1(a) and/or Rule 16*bis*.1(b), the receiving Office shall, if it has received moneys from the applicant, inform that Bureau of the fees to which those moneys have been applied and the fees which it has charged to the International Bureau. The receiving Office shall, where applicable, indicate the designations (if any) for which the fees were paid by moneys (if any) so received and the designations for which the fees were charged to the International Bureau.

(ii) Where moneys have been applied by the receiving Office in accordance with an instruction received from the applicant as mentioned in paragraph (a), the receiving Office shall inform the International Bureau as to the effect of the said instruction, preferably by sending the International Bureau a copy of a written communication received from the applicant.

Section 209

Indications as to Deposited Microorganisms on a Separate Sheet

(a) To the extent that any indication with respect to a deposited microorganism is not contained in the description, it may be given on a separate sheet. Where any such indication is so given, it shall preferably be on the form provided in Annex F as form PCT/RO/134 and, if furnished at the time of filing, the said form shall, subject to paragraph (b), preferably be attached to the request and referred to in the Check List referred to in Rule 3.3(a)(ii).

(b) For the purposes of the Japanese Patent Office, when Japan is designated, paragraph (a) applies only to the extent that the said form or sheet is included as one of the sheets of the description of the international application at the time of filing.

Section 503

Method of Identifying Documents Cited in the International Search Report

Identification of any document cited in the international search report referred to in Rule 43.5(b) shall be made by indicating the following elements in the order in which they are listed:

(a) *In the case of any patent document* (patent documents being patents within the meaning of Article 2(ii) as well as published applications relating thereto):

(i) [no change]

(ii) [no change]

(iii) [no change]

(iv) the name of the patentee or applicant (in capital letters, where appropriate abbreviated);

(v) the date of publication of the cited patent document as indicated thereon; and

(vi) where applicable, the pages, columns or lines where the relevant passages appear, or the relevant figures of the drawings.

(The following example illustrates the citation of a patent document according to paragraph (a) above: JP, B, 50–14535 (NCR CORPORATION) 28 May 1975 (28.05.75), see column 4, lines 3 to 27).

(b) [No change]

(c) [No change]

(d) [No change]

Section 505

Indication of Citations of Particular Relevance in the International Search Report

(a) Where any document cited in the international search report is of particular relevance, the special indication required by Rule 43.5(c) shall consist of the letter(s) "X" and/or "Y" placed next to the citation of the said document.

(b) Category "X" is applicable where a document is such that when taken alone, a claimed invention cannot be considered novel or cannot be considerd to involve an inventive step.

(c) Category "Y" is applicable where a document is such that a claimed invention cannot be considered to involve an inventive step when the document is combined with one or more other such documents, such combination being obvious to a person skilled in the art.

Section 507

Manner of Indicating Certain Special Categories of Documents Cited in the International Search Report

(a) [No change]

(b) [No change]

(c) Where any document cited in the international search report is not considered to be of particular relevance requiring the use of categories "X" and/or "Y" but defines the general state of the art, it shall be indicated by the letter "A" placed next to the citation of the said document.*

*(see III, 3.14 of the Guidelines for International Search to be Carried Out under the PCT)

(d) [No change]

(e) [No change]

(f) Where in the international search report any document is cited for reasons other than those referred to in paragraphs (a) to (e), for example:

—a document which may throw doubt on a priority claim,*

—a document cited to establish the publication date of another citation,**

such document shall be indicated by the letter "L" next to the citation of the document and the reason for citing the document shall be given.

*(see VI, 4.3 of the Guidelines for International Search to be Carried Out under the PCT)

**(see VI, 6.2 of the Guidelines for International Search to be Carried Out under the PCT)

(g) Where a document is a member of a patent family*, it shall, whenever feasible, be mentioned in the international search report in addition to the one cited belonging as well to this family and should be preceded by the sign ampersand (&). A document whose contents have not been verified by the search examiner but are believed to be substantially identical with those of another document which the search examiner has inspected, may be cited in the international search report in the above-mentioned manner indicated for patent family members**.

*(see VI, 3.2 of the Guidelines for International Search to be Carried Out under the PCT)

**(see VI, 5.2 of the Guidelines for International Search to be Carried Out under the PCT)

V. *Revised Request form PCT/RO/101*

The Request form for an international application filed under the PCT has been revised by WIPO. A copy of the revised form is reproduced on the following pages. Full size copies are available free of charge from the Patent and Trademark Office. Requests should be sent to the Commissioner of Patents and Trademarks, Box PCT, Washington, D.C. 20231, or by calling 703/557–2003. The current unrevised request forms may be used until March 1, 1982.

VI. *Completed sample revised Request form*

A revised Request form which has been completed so that it may be used as a guide has been included at the end of this notice.

GERALD J. MOSSINGHOFF,
Commissioner of Patents and Trademarks.

Oct. 27, 1981.

INTERNATIONAL APPLICATION UNDER THE PATENT COOPERATION TREATY

REQUEST

THE UNDERSIGNED REQUESTS THAT THE PRESENT INTERNATIONAL APPLICATION BE PROCESSED ACCORDING TO THE PATENT COOPERATION TREATY

(The following is to be filled in by the receiving Office)
INTERNATIONAL APPLICATION No:

INTERNATIONAL FILING DATE:

(Stamp)
Name of receiving Office and "PCT International Application"

Applicant's or Agent's File Reference
(indicated by applicant if desired)

Box No. I TITLE OF INVENTION

Box No. II APPLICANT (WHETHER OR NOT ALSO INVENTOR); DESIGNATED STATES FOR WHICH HE/SHE/IT IS APPLICANT. Use this box for indicating the applicant or, if there are several applicants, one of them. If more than one person (includes, where applicable, a legal entity) is involved, continue in Box No. III.

The person identified in this box is (check one only): ☐ applicant and inventor* ☐ applicant only

Name *and* address:**

Telephone number: (including area code) Telegraphic address: Teleprinter address:

Country of nationality: Country of residence:***

The person identified in this box is *applicant* for the purposes of (check one only):

☐ all designated States ☐ all designated States except the United States of America ☐ the United States of America only ☐ the States indicated in the "Supplemental Box"

Box No. III FURTHER APPLICANTS, IF ANY; (FURTHER) INVENTORS, IF ANY; DESIGNATED STATES FOR WHICH THEY ARE APPLICANTS (IF APPLICABLE). A separate sub-box has to be filled in in respect of each person (includes, where applicable, a legal entity). If the following two sub-boxes are insufficient, continue in the "Supplemental Box," (giving there for each additional person the same indications as those requested in the following two sub-boxes) or by using a "continuation sheet."

The person identified in this sub-box is (check one only): ☐ applicant and inventor* ☐ applicant only ☐ inventor only*

Name *and* address:**

If the person identified in this sub-box is *applicant (or applicant and inventor)*, indicate also:

Country of nationality: Country of residence:***

and whether that person is *applicant* for the purposes of (check one only):

☐ all designated States ☐ all designated States except the United States of America ☐ the United States of America only ☐ the States indicated in the "Supplemental Box"

The person identified in this sub-box is (check one only): ☐ applicant and inventor* ☐ applicant only ☐ inventor only*

Name *and* address:**

If the person identified in this sub-box is *applicant (or applicant and inventor)*, indicate also:

Country of nationality: Country of residence:***

and whether that person is *applicant* for the purposes of (check one only):

☐ all designated States ☐ all designated States except the United States of America ☐ the United States of America only ☐ the States indicated in the "Supplemental Box"

* If the person indicated as "applicant and inventor" or as "inventor only" is not an *inventor* for the purposes of all the designated States, give the necessary indications in the "Supplemental box."

** Indicate the name of a natural person by giving his/her family name first followed by the given name(s). Indicate the name of a legal entity by its full official designation. In the address, include both the postal code (if any) and the country (name).

*** If residence is not indicated, it will be assumed that the country of residence is the same as the country indicated in the address.

Form PCT/RO/101 (first sheet) (October 1981)

See notes on accompanying sheet

Sheet number........

Box No. III CONTINUATION (IF REQUIRED) FURTHER APPLICANTS, IF ANY; (FURTHER) INVENTORS, IF ANY; DESIGNATED STATES FOR WHICH THEY ARE APPLICANTS (IF APPLICABLE). A separate sub-box has to be filled in in respect of each person (includes, where applicable, a legal entity).

The person identified in this sub-box is (check one only): ☐ applicant and inventor* ☐ applicant only ☐ inventor only*

Name *and* address:**

If the person identified in this sub-box is *applicant (or applicant and inventor)*, indicate also:

Country of nationality: Country of residence:***

and whether that person is *applicant* for the purposes of (check one only):

☐ all designated States ☐ all designated States except the United States of America ☐ the United States of America only ☐ the States indicated in the "Supplemental Box"

The person identified in this sub-box is (check one only): ☐ applicant and inventor* ☐ applicant only ☐ inventor only*

Name *and* address:**

If the person identified in this sub-box is *applicant (or applicant and inventor)*, indicate also:

Country of nationality: Country of residence:***

and whether that person is *applicant* for the purposes of (check one only):

☐ all designated States ☐ all designated States except the United States of America ☐ the United States of America only ☐ the States indicated in the "Supplemental Box"

The person identified in this sub-box is (check one only): ☐ applicant and inventor* ☐ applicant only ☐ inventor only*

Name *and* address:**

If the person identified in this sub-box is *applicant (or applicant and inventor)*, indicate also:

Country of nationality: Country of residence:***

and whether that person is *applicant* for the purposes of (check one only):

☐ all designated States ☐ all designated States except the United States of America ☐ the United States of America only ☐ the States indicated in the "Supplemental Box"

The person identified in this sub-box is (check one only): ☐ applicant and inventor* ☐ applicant only ☐ inventor only*

Name *and* address:**

If the person identified in this sub-box is *applicant (or applicant and inventor)*, indicate also:

Country of nationality: Country of residence:***

and whether that person is *applicant* for the purposes of (check one only):

☐ all designated States ☐ all designated States except the United States of America ☐ the United States of America only ☐ the States indicated in the "Supplemental Box"

* If the person indicated as "applicant and inventor" or as "inventor only" is not an *inventor* for the purposes of all the designated States, give the necessary indications in the "Supplemental box."

** Indicate the name of a natural person by giving his/her family name first followed by the given name(s). Indicate the name of a legal entity by its full official designation. In the address, include both the postal code (if any) and the country (name).

*** If residence is not indicated, it will be assumed that the country of residence is the same as the country indicated in the address.

If this continuation sheet is not used, it need not be included in the Request.

Form PCT/RO/101 (continuation sheet) (October 1981) See notes on accompanying sheet

Sheet number ....

Box No. IV AGENT (IF ANY) OR COMMON REPRESENTATIVE (IF ANY); ADDRESS FOR NOTIFICATIONS (IN CERTAIN CASES) A common representative may be appointed only if there are several applicants and if no agent is or has been appointed; the common representative must be one of the applicants.

The following person (includes, where applicable, a legal entity) is hereby/has been appointed as agent or common representative to act on behalf of the applicant(s) before the competent International Authorities:

Name *and* address, including postal code and country (if the space below is used instead for an address for notifications*, check here ☐):

Telephone number: (including area code) Telegraphic address: Teleprinter address:

Box No. V DESIGNATION OF STATES; POSSIBLE CHOICE OF EUROPEAN PATENT; POSSIBLE CHOICES OF CERTAIN KINDS OF PROTECTION OR TREATMENT. Where the name of a State is followed by two check boxes, either or both of the boxes may be checked. The checking of both boxes results in both a European and a national patent being requested for the same State. Designation of Switzerland includes designation of Liechtenstein (and vice-versa).

The following States are hereby designated:***

Code	State	European Patent	National Patent (if other national title or treatment desired, specify)**
AT	Austria	☐	☐ ** ....
AU	Australia		☐ ** ....
BR	Brazil		☐ ** ....
CH and LI	Switzerland and Liechtenstein	☐	☐
DE	Federal Republic of Germany	☐	☐ ** ....
DK	Denmark		☐
FI	Finland		☐
FR	France	☐	[no national title available]
GB	United Kingdom	☐	☐
HU	Hungary		☐
JP	Japan		☐ ** ....

Code	State	European Patent	National Patent
KP	Democratic People's Republic of Korea		☐
LU	Luxembourg	☐	☐ ** ....
MC	Monaco		☐ ** ....
MG	Madagascar		☐
MW	Malawi		☐ ** ....
NL	Netherlands	☐	☐
NO	Norway		☐
RO	Romania		☐
SE	Sweden	☐	☐
SU	Soviet Union		☐ ** ....
US	United States of America		☐ ** ....
EP	all PCT Contracting States for which a European patent may be requested	☐ ****	these States are those listed above whose names are preceded by the codes AT, CH and LI, DE, FR, GB, LU, NL and SE and (specify names of any others) ....
OA	OAPI (Cameroon, Central African Republic, Chad, Congo, Gabon, Senegal, Togo)		☐ OAPI Patent (if other OAPI title desired, specify)** ....

Space reserved for designating countries which become party to the PCT after the issuance of the present form (October 1, 1981):

....

....

* An address for the sending of notifications for a sole applicant or for a common representative may be indicated if no agent has been appointed to represent the applicant or, if there are several applicants, all of them.

** If another kind of protection or a title of addition is desired or if, in the United States of America, treatment as a continuation or a continuation in part is desired, indicate according to the instructions given in the Notes to Box No. V.

*** The applicant's choice of the order of the designations may be indicated by checking the boxes of the designated States with sequential arabic numerals (see also the Notes to Box No. V).

**** When this box is checked, none of the other boxes in the column "European patent" should be checked.

Form PCT/RO/101 (second sheet) (October 1981)

See notes on accompanying sheet

Sheet number........

Supplemental Box. Use this box in the following cases:

(i) *if more than three persons are involved as applicants and/or inventors;* in such case, write "Continuation of Box No. III" and indicate for each additional person the same type of information as required in Box No. III;

(ii) *if, in Box No. II or any of the sub-boxes of Box No. III, the indication "the States indicated in the 'Supplemental Box,'" is checked;* in such case, write "Continuation of Box No. II" or "Continuation of Box No. III" or "Continuation of Boxes No. II and No. III" (as the case may be), indicate the name of the applicant(s) involved and, next to (each) such name, the country or countries (or EP or OA, if applicable) for the purposes of which he/she/it is applicant;

(iii) *if, in Box No. II or any of the sub-boxes of Box Na. III, a person indicated as "applicant and inventor" or "inventor only" is not inventor for the purposes of all designated States or for the purposes of the United States of America;* in such case, write "Continuation of Box No: II" or "Continuation of Box No. III" or "Continuation of Boxes No. II and No. III" (as the case may be), indicate the name of the inventor and, next to such name, the country or countries (or EP or OA, if applicable) for the purposes of which the named person is inventor;

(iv) *if there is more than one agent and their addresses are not the same;* in such case, write "Continuation of Box No. IV" and indicate for each additional agent the same type of information as required in Box No. IV;

(v) *if, in Box No. V, the name of any country (or OAPI) is accompanied by the indication "patent of addition," "certificate of addition," or "inventor's certificate of addition," or if, in Box No. V, the name of the United States of America is accompanied by an indication "Continuation" or "Continuation in part";* in such case, write "Continuation of Box No. V" and the name of each country involved (or OAPI), and after the name of each such country (or OAPI), the number of the parent title or parent application and the date of grant of parent title or filing of parent application;

(vi) *if there are more than three earlier applications whose priority is claimed;* in such case, indicate "Continuation of Box No. VI" and indicate for each additional earlier application the same type of information as required in Box No. VI;

(vii) *if, in any of the Boxes, the space is insufficient to furnish all the information;* in such case, write "Continuation of Box No. ..." [indicate the number of the Box] and furnish the information in the same manner as required according to the captions of the Box in which the space was insufficient.

If this Supplemental Box is not used, this sheet need not be included in the Request.

Form PCT/RO/101 (supplemental sheet) (October 1981)

See notes on accompanying sheet

Sheet number........

Box No. VI PRIORITY CLAIM (IF ANY). The priority of the following earlier application(s) is hereby claimed:

Country (country in which it was filed if national application; one of the countries for which it was filed if regional or international application)	Filing Date (day, month, year)	Application No.	Office of Filing (fill in only if the earlier application is an international application or a regional application)
(1)			
(2)			
(3)			

(Letter codes may be used to indicate country and/or Office of filing)

When the earlier application was filed with the Office which, for the purposes of the present international application, is the receiving Office, the applicant may, *against payment of the required fee*, ask the following:

☐ the receiving Office is hereby requested to prepare and transmit to the International Bureau a certified copy of the above-mentioned earlier application/of the earlier applications identified above by the numbers (insert the applicable numbers) ....

Box No. VII EARLIER SEARCH (IF ANY). Fill in where a search (international, international-type or other) by the International Searching Authority has already been requested (or completed) and the said Authority is now requested to base the international search, to the extent possible, on the results of the said earlier search. Identify such search or request either by reference to the relevant application (or the translation thereof) or by reference to the search request.

International application number or number and country (or regional Office) of other application:

International/regional/national filing date

Date of request for search:

Number (if available) given to search request:

Box No. VIII SIGNATURE OF APPLICANT(S) OR AGENT

If the present Request form is signed on behalf of any applicant by an agent, a separate power of attorney appointing the agent and signed by the applicant is required. If in such case it is desired to make use of a general power of attorney (deposited with the receiving Office), a copy thereof must be attached to this form.

Box No. IX CHECK LIST (To be filled in by the Applicant)

This international application contains the following number of sheets:

1. request ____________ sheets
2. description ____________ sheets
3. claims ____________ sheets
4. abstract ____________ sheets
5. drawings ____________ sheets

Total ____________ sheets

Figure number .... of the drawings (if any) is suggested to accompany the abstract for publication.

This international application as filed is accompanied by the items checked below:

1. ☐ separate signed power of attorney
2. ☐ copy of general power of attorney
3. ☐ priority document(s) (see Box No. VI)
4. ☐ receipt of the fees paid or revenue stamps
5. ☐ cheque for the payment of fees
6. ☐ request to charge deposit account
7. ☐ other document (specify)

(The following is to be filled in by the receiving Office)

1. Date of actual receipt of the purported international application:
2. Corrected date of actual receipt due to later but timely received papers or drawings completing the purported international application:
3. Date of timely receipt of the required corrections under Article 11 of the PCT:
4. Drawings ☐ Received ☐ No Drawings

(The following is to be filled in by the International Bureau)

Date of receipt of the record copy:

Form PCT/RO/101 (last sheet) (October 1981)

See notes on accompanying sheet

NOTES TO THE REQUEST FORM (PCT/RO/101)

These Notes are intended to facilitate the filling in of the request form. For authentic information, see the text of the Patent Cooperation Treaty and the texts of the Regulations and the Administrative Instructions under that Treaty. (See also the **PCT Applicant's Guide**, a publication of WIPO.) In case of discrepancy between these Notes and the said texts, the latter are applicable.

"Article" refers to Articles of the Treaty, "Rule" refers to Rules of the Regulations and "Section" refers to Sections of the Administrative Instructions.

MANDATORY AND OPTIONAL CONTENTS OF THE REQUEST

"The request shall contain:

(i) a petition [*already pre-printed on the request form*],
(ii) the title of the invention,
(iii) indications concerning the applicant and the agent, if there is an agent,
(iv) the designation of States,
(v) indications concerning the inventor where the national law of at least one of the designated States requires that the name of the inventor be furnished at the time of filing a national application." **(Rule 4.1(a))**

"The request shall, where applicable, contain:

(i) a priority claim,
(ii) a reference to any earlier international, international-type or other search,
(iii) choices of certain kinds of protection,
(iv) an indication that the applicant wishes to obtain a regional patent and the names of the designated States for which he wishes to obtain such a patent,
(v) a reference to a parent application or parent patent." **(Rule 4.1(b))**

"The request may contain:

(i) indications concerning the inventor where the national law of none of the designated States requires that the name of the inventor be furnished at the time of filing a national application,
(ii) a request to the receiving Office to transmit the priority document to the International Bureau where the application whose priority was claimed was filed with the national Office or intergovernmental authority which is the receiving Office." **(Rule 4.1(c))**

"The request shall be signed." **(Rule 4.1(d))**

NOTES TO BOX No. I

Title of Invention. "The title of the invention shall be short (preferably from two to seven words when in English or translated into English) and precise." **(Rule 4.3)**

NOTES TO BOXES No. II and III

Applicant. "The request shall indicate the name, address, nationality and residence of the applicant or, if there are several applicants, of each of them." **(Rule 4.5(a))**

Different Applicants for Different Designated States. "The international application may indicate different applicants for the purposes of different designated States, provided that, in respect of each designated State, at least one of the applicants indicated for the purposes of that State is entitled to file an international application according to Article 9 [i.e., is a national or resident of a Contracting State]." **(Rule 18.4(a))** *Where the United States of America is one of the designated States the applicant or applicants named in respect of the United States of America must be the inventor or inventors.*

Inventor. "The request shall contain ...... the name of and other prescribed data concerning the inventor where the national law of at least one of the designated States requires that these indications be furnished at the time of filing a national application ......" **(Article 4(1)(v))** "Where Rule 4.1(a)(v) applies, the request shall indicate the name and address of the inventor or, if there are several inventors, of each of them." **(Rule 4.6(a))** "If the applicant is the inventor, the request, in lieu of the indication under paragraph (a), shall contain a statement to that effect **(Rule 4.6(b))** "...... Where the national law of the designated State requires the indication of the name of and other prescribed data concerning the inventor but allows that these indications be furnished at a time later than that of the filing of a national application, the applicant shall, unless they were contained in the request, furnish the said indications to the national Office of or acting for that State not later than at the expiration of 20 months from the priority date." **(Article 22(1))**

Names. "Names of natural persons shall be indicated by the person's family name and given name(s), the family name being indicated before the given name(s)." **(Rule 4.4(a))** "Names of legal entities shall be indicated by their full, official designations." **(Rule 4.4(b))**

Addresses. "Addresses shall be indicated in such a way as to satisfy the customary requirements for prompt postal delivery at the indicated address and, in any case, shall consist of all the relevant administrative units up to, and including, the house number, if any. Where the national law of the designated State does not require the indication of the house number, failure to indicate such number shall have no effect in that State. It is recommended to indicate any telegraphic and teleprinter address and telephone number in respect of the agent or common representative or, in the absence of the designation of an agent or common representative in the request, of the applicant first named in the request." **(Rule 4.4(c))** "For each applicant, inventor, or agent, only one address may be indicated......" **(Rule 4.4(d))** *See, however, the Notes to Box No. IV as to the indication, in that Box, in certain cases, of an "address for notifications" for the applicant.*

Nationality. "The applicant's nationality shall be indicated by the name of the State of which he is a national." **(Rule 4.5(b))**

Residence. "The applicant's residence shall be indicated by the name of the State of which he is a resident." **(Rule 4.5(c))**

Names of States. "The name of any State referred to in the request shall be indicated by the full name of the State or by a generally accepted short title which, if the indications are in English or French shall be as appears in Annex A [i.e., Annex A to the Administrative Instructions under the PCT; the pre-printed names of PCT Contracting States appearing in Box No. V of the request form are in accordance with the said Annex A]." **(Section 201(a), first sentence)**

NOTES TO BOX No. IV

Agent or Common Representative. *When listing several agents, list first the agent to whom it is desired that any correspondence shall be addressed.* **(See Section 108)** "If agents are designated, the request shall so indicate, and shall state their names and addresses." **(Rule 4.7)** "If there is more than one applicant and the request does not refer to an agent representing all the applicants ("a common agent"), the request shall designate one of the applicants who is entitled to file an international application according to Article 9 [i.e., is a national or resident of a Contracting State] as their common representative." **(Rule 4.8(a))**

Appointment of Agent or Common Representative. "Appointment of any agent, or of any common representative within the meaning of Rule 4.8(a), shall be effected by each applicant, at his choice, either by signing the request in which the agent or common representative is designated or by a separate power of attorney (i.e., a document appointing an agent or common representative)." **(Rule 90.3(a))** "Where the international application is filed with reference to a general power of attorney not signed by all the applicants, it shall be sufficient for the purpose of appointment of a common agent under Rule 90.3, if the request or a separate power of attorney is signed by the applicant, who did not sign the general power of attorney." **(Section 106(b))**

Address for Notifications. *An address to which notifications may be sent to the (sole) applicant or the common representative, when no agent has been appointed, may be indicated in Box No. IV instead of the name and address of an agent:* "For each applicant ......, only one address may be indicated except that, if an agent has been appointed to represent the applicant, or all of them if more than one, the applicant or, if there is more than one applicant, the common representative, may indicate, in addition to any other address given in the request, an address to which notifications may be sent." **(Rule 4.4(d))**

For **Names** *(including* **Names of States***) and* **Addresses***, see Notes to Boxes Nos. II and III.*

NOTES TO BOX No. V

Designation of States. "Contracting States shall be designated in the request by their names." **(Rule 4.9)** *Note that after filing further designations cannot be made.*

The checking of the boxes of the designated States by means of sequential arabic numerals will be taken as indicating the applicant's choice of the order of the designations; if another form of checking is used, the order will be taken as that in which the checked boxes appear on the form. This order will only have any significance if the amount received for the designation fees is insufficient to cover all the designations. In that case, the amount received will be applied in payment of the fees for the designations following the said order. **(See Section 208 and Rules 16bis.2(c) and 16bis.3(b))**

Where one or more States are designated twice (once for the purposes of a European patent and once for the purposes of a national patent), one designation fee must be paid in respect of the European patent and as many designation fees must be paid in respect of the national patents as there are designated States. **(See Section 203bis and Rule 15.1(ii))**

Possible Choices of Certain Kinds of Protection or Treatment. *If, in any country where that is possible, instead of a patent, a national title other than a patent is desired, write after the box of that country, the name of the title, that is, "petty patent" (available in Australia), "utility model" (available in Brazil, the Federal Republic of Germany, Japan and OAPI) or "inventor's certificate" (available in the Soviet Union). Where, in the Federal Republic of Germany (only country in which these possibilities exist), in addition to a patent, a utility model is also desired, write, after the box of that country* **"and utility model"** *or, where subsidiarily to a patent a utility model is desired, write, after the said box* **"and auxiliary utility model"**. **(See Section 202)**

Where, in respect of any country where that is possible, it is desired that the application be treated as an application for a certain title "of addition" or as an application for a continuation or a continuation in part, write after the box of that country, the appropriate words, that is, "patent of addition" (available in Australia, Austria, the Federal Republic of Germany, Japan, Malawi, Soviet Union), "certificate of addition" (available in Luxembourg, Monaco, OAPI), "inventor's certificate of addition" (available in the Soviet Union), "continuation" or "continuation in part" (both available in the United States of America). **If any of these indications is used, indicate in the "Supplemental Box" the country for which such treatment is desired, the number of the parent title or parent application and the date of grant of the parent title or the date of filing of the parent application, as the case may be.**

For Names of States, *see Notes to Boxes Nos. II and III.*

NOTES TO BOX No. VI

Priority claim. "The declaration [containing the priority claim] shall be made in the request; it shall ...... indicate:

(i) when the earlier application is not a regional or an international application, the country in which it was filed; when the earlier application is a regional or an international application, the country or countries for which it was filed,
(ii) the date on which it was filed,
(iii) the number under which it was filed, and
(iv) when the earlier application is a regional or an international application, the national Office or intergovernmental organization with which it was filed." **Rule 4.10(a))**

"If the request does not indicate both

(i) when the earlier application is not a regional or an international application, the country in which it was filed; when the earlier application is a regional or an international application, at least one country for which it was filed, and
(ii) the date on which it was filed,

the priority claim shall, for the purposes of the procedure under the Treaty, be considered not to have been made ......" **(Rule 4.10(b))**

"If the application number of the earlier application is not indicated in the request but is furnished by the applicant to the International Bureau prior to the expiration of the 16th month from the priority date, it shall be considered by all designated States to have been furnished in time ......" **(Rule 4.10(c), first sentence)**

Certified Copy of Earlier Application. "Where the priority of an earlier national application is claimed under Article 8 in the international application, a copy of the said national application, certified by the authority with which it was filed ("the priority document"), shall, unless already filed with the receiving Office together with the international application, be submitted by the applicant to the International Bureau or to the receiving Office not later than 16 months after the priority date or, in the case referred to in Article 23(2), not later than at the time the processing or examination is requested ......" **(Rule 17.1(a), first sentence)** "Where the priority document is issued by the receiving Office, the applicant may, instead of submitting the priority document, request the receiving Office to transmit the priority document to the International Bureau. Such request shall be made not later than the expiration of the applicable time limit referred to under paragraph (a) and may be subjected by the receiving Office to the payment of a fee ......" **(Rule 17.1(b))**

Dates. "Any date in the international application, or used in any correspondence emanating from International Authorities relating to the international application, shall be indicated by the Arabic number of the day, by the name of the month, and by the Arabic number of the year." **(See Section 110)**

NOTES TO BOX No. VII

Earlier Search. "If an international or international-type search has been requested on an application under Article 15(5) or if the applicant wishes the International Searching Authority to base the international search report wholly or in part on the results of a search, other than an international or international-type search, made by the national Office or intergovernmental organization which is the International Searching Authority competent for the international application, the request shall contain a reference to that fact. Such reference shall either identify the application (or its translation, as the case may be) in respect of which the earlier search was made by indicating country, date and number, or the said search by indicating, where applicable, date and number of the request for such search." **(Rule 4.11)**

For **Dates**, *see Notes to Box No. VI.*

NOTES TO BOX No. VIII

Signature. *The signature (Rule 4.1(d)) must be that of the applicant (if there are several applicants all must sign (Rule 4.15)); however, the signature may be that of the agent (Rule 2.1) where there is attached to the request a separate power of attorney appointing the agent or the copy of a general power of attorney already in the possession of the receiving Office. The typing of the name of each person signing the Request below the signature is recommended; similarly, an indication of the capacity in which the person signs is recommended if such capacity is not obvious from a reading of the Request.*

For **Powers of Attorney** *and* **General Power of Attorney**, *see Notes to Box No. IX.*

NOTES TO BOX No. IX

Check List (*in general*, **see Rule 3.3**)

Power of Attorney. "The power of attorney may be submitted to the receiving Office or the International Bureau." **(Rule 90.3(b))** "If the separate power of attorney is not signed ...... or ...... is missing, or if the indication of the name or address of the appointed person does not comply with Rule 4.4, the power of attorney shall be considered nonexistent unless the defect is corrected." **(Rule 90.3(c))**

General Power of Attorney. "A general power of attorney may be deposited with the receiving Office for purposes of the processing of the international application as defined in Rule 90.2(d). Reference may be made in the request to such general power of attorney, provided that a copy thereof is attached to the request by the applicant." **(Rule 90.3(d))**

Optional Sheet. *The optional sheet containing indications concerning deposited microorganisms may, in most cases, be listed as an "other document." This is not the case if Japan is designated since the optional sheet is accepted in that case only if included in the sheets of the description.*

NOTES TO "SUPPLEMENTAL BOX"

Different Inventors for Different (Groups of) Designated States. "The request may, for different designated States, indicate different persons as inventors where, in this respect, the requirements of the national laws of the designated States are not the same. In such a case, the request shall contain a separate statement for each designated State or group of States in which a particular person, or the same person, is to be considered the inventor, or in which particular persons, or the same persons, are to be considered the inventors." **(Rule 4.6(c))**

Parent Application or Grant. "If the applicant wishes his international application to be treated, in any designated State, as an application for a patent or certificate of addition, inventor's certificate of addition, or utility certificate of addition, he shall identify the parent application or the parent patent, parent inventor's certificate, or parent utility certificate to which the patent or certificate of addition, inventor's certificate of addition, or utility certificate of addition, if granted, relates. For the purposes of this paragraph Article 2(ii) shall not apply." **(Rule 4.13)** "If the applicant wishes his international application to be treated, in any designated State, as an application for a continuation or a continuation-in-part of an earlier application, he shall so indicate in the request and shall identify the parent application involved." **(Rule 4.14)**

THIS SHEET DOES NOT COUNT AS A PAGE OF THE INTERNATIONAL APPLICATION

APPLICANT		DOCKET NUMBER	This column for use by receiving Office
RO/US RECEIPT DATE	INTERNATIONAL APPLICATION NUMBER	SUBMISSION DATE	

UNITED STATES RECEIVING OFFICE FEE CALCULATION SHEET

FEES SUBMITTED OR AUTHORIZED:

I. TRANSMITTAL FEE .... [T]

II. SEARCH FEE .... [S]

III. INTERNATIONAL FEE

BASIC FEE

Indicate the number of SHEETS contained in the international application ______.

first __30__ sheets .... [b_1]

remaining ______ sheets X $ ______ = [b_2]
(multiply excess over 30 by amount of supplement to Basic Fee)

Add amounts entered in boxes b_1 and b_2 and enter total in box B.
This figure is the amount of the BASIC FEE .... [B]

DESIGNATION FEES

Indicate the number of DESIGNATED STATES for which National patents have been sought and multiply by the amount of the designation fee ______ X $ ______ = [d_1]

Indicate the number of GROUPS of designated States for which regional patents have been sought and multiply by the amount of the designation fee ______ X $ ______ = [d_2]

—Note instructions regarding the application of designation fees below—

Add amounts entered in boxes d_1 and d_2 and enter total in box D.
This figure is the amount of the DESIGNATION FEES .... [D]

Add amounts entered in boxes B and D, and enter total in box I.
This figure is the amount of the INTERNATIONAL FEE .... [I]

IV. TOTAL FEES SUBMITTED OR AUTHORIZED:

Add amounts entered in boxes T, S and I, and enter total in the total box. This figure is the total amount of the FEES SUBMITTED or AUTHORIZED .... [TOTAL]

Payment must be made in United States currency. Checks, postal money orders or bank drafts must be made payable to the Commissioner of Patents and Trademarks. Payment may also be made by authorization to charge to a Patent and Trademark Office deposit account.

DEPOSIT ACCOUNT AUTHORIZATION

☐ The RO/US is hereby authorized to charge the total fees indicated above to my deposit account.

☐ The RO/US is hereby authorized to charge any deficiency or credit any overpayment in the total fees indicated above to my deposit account.

Deposit Account Number ______ *Date* ______ *Signature* ______

INSTRUCTIONS REGARDING DESIGNATION FEES: *(See reverse side for list of member States)*

Use the space below to indicate, in order, those countries for which the designation fees submitted or authorized are to be applied. Include after the name of the country any indication that a regional patent is sought. If no countries are indicated below, the RO/US will apply the designation fees submitted or authorized to the designated countries in the order in which those countries are listed in the Request.

Form PCT/RO/101 (Annex) (U.S. Version)
U.S. DEPARTMENT OF COMMERCE - Patent and Trademark Office

SAMPLE (filed 01 October 1981)

(The following is to be filled in by the receiving Office)

INTERNATIONAL APPLICATION No:

INTERNATIONAL FILING DATE:

(Stamp) Name of receiving Office and "PCT International Application"

Applicant's or Agent's File Reference (indicated by applicant if desired) PCT-1

INTERNATIONAL APPLICATION UNDER THE PATENT COOPERATION TREATY

REQUEST

THE UNDERSIGNED REQUESTS THAT THE PRESENT INTERNATIONAL APPLICATION BE PROCESSED ACCORDING TO THE PATENT COOPERATION TREATY

Box No. I TITLE OF INVENTION

A SELF-LOCKING PIPE CLAMP FOR FIELD WELDING

Box No. II APPLICANT (WHETHER OR NOT ALSO INVENTOR); DESIGNATED STATES FOR WHICH HE/SHE/IT IS APPLICANT. Use this box for indicating the applicant or, if there are several applicants, one of them. If more than one person (includes, where applicable, a legal entity) is involved, continue in Box No. III.

The person identified in this box is (check one only): [ ] applicant and inventor* [X] applicant only

Name and address:**

XYZABC COMPANY, INC., a corporation of the Commonwealth of Pennsylvania
Suite 1000
4500 Mason-Dixon Street
Anytown, Pennsylvania 16000
United States of America

Telephone number: (including area code) (412) 555-1212 Telegraphic address: 123-456 Teleprinter address: 123-456-7890

Country of nationality: United States of America Country of residence:*** United States of America

The person identified in this box is *applicant* for the purposes of (check one only):

[ ] all designated States [X] all designated States except the United States of America [ ] the United States of America only [ ] the States indicated in the "Supplemental Box"

Box No. III FURTHER APPLICANTS, IF ANY: (FURTHER) INVENTORS, IF ANY; DESIGNATED STATES FOR WHICH THEY ARE APPLICANTS (IF APPLICABLE). A separate sub-box has to be filled in in respect of each person (includes, where applicable, a legal entity). If the following two sub-boxes are insufficient, continue in the "Supplemental Box," (giving there for each additional person the same indications as those requested in the following two sub-boxes) or by using a "continuation sheet."

The person identified in this sub-box is (check one only): [X] applicant and inventor* [ ] applicant only [ ] inventor only*

Name and address:**

Doe, John A.
4512 Milford Boulevard
Smithtown, North Dakota 00000
United States of America

If the person identified in this sub-box is *applicant (or applicant and inventor)*, indicate also:

Country of nationality: United States of America Country of residence:*** United States of America

and whether that person is *applicant* for the purposes of (check one only):

[ ] all designated States [ ] all designated States except the United States of America [X] the United States of America only [ ] the States indicated in the "Supplemental Box"

The person identified in this sub-box is (check one only): [X] applicant and inventor* [ ] applicant only [ ] inventor only*

Name and address:**

Smith, R. Thomas, Jr.
123 South 40th Street
Smithtown, North Dakota 00000
United States of America

If the person identified in this sub-box is *applicant (or applicant and inventor)*, indicate also:

Country of nationality: United States of America Country of residence:*** United States of America

and whether that person is *applicant* for the purposes of (check one only):

[ ] all designated States [ ] all designated States except the United States of America [X] the United States of America only [ ] the States indicated in the "Supplemental Box"

* If the person indicated as "applicant and inventor" or as "inventor only" is not an *inventor* for the purposes of all the designated States, give the necessary indications in the "Supplemental box."

** Indicate the name of a natural person by giving his/her family name first followed by the given name(s). Indicate the name of a legal entity by its full official designation. In the address, include both the postal code (if any) and the country (name).

*** If residence is not indicated, it will be assumed that the country of residence is the same as the country indicated in the address.

2

Box No. IV AGENT (IF ANY) OR COMMON REP[illegible] ADDRESS FOR NOTIFICATIONS (IN CERTAIN CASES) A common representative may be appointed only if there are several applicants and if no agent is or has been appointed; the common representative must be one of the applicants.

The following person (includes, where applicable, a legal entity) is hereby/has been appointed as agent or common representative to act on behalf of the applicant(s) before the competent International Authorities:

Name and address, including postal code and country (if the space below is used instead for an address for notifications*, check here [ ]):

Miller George A.
Miller and Washington
4900 Mason-Dixon Street
Anytown, Pennsylvania 16000
United States of America

Telephone number: (including area code) (412) 555-1212 Telegraphic address: 792-146 Teleprinter address: 987-654-3210

Box No. V DESIGNATION OF STATES: POSSIBLE CHOICE OF EUROPEAN PATENT; POSSIBLE CHOICES OF CERTAIN KINDS OF PROTECTION OR TREATMENT. Where the name of a State is followed by two check boxes, either or both of the boxes may be checked. The checking of both boxes results in both a European and a national patent being requested for the same State. Designation of Switzerland includes designation of Liechtenstein (and vice-versa).

The following States are hereby designated:***

		European Patent	National Patent (if other national title or treatment desired, specify)**
AT	Austria	[ ]	[ ] **
AU	Australia		[ ] **
BR	Brazil		[X] **
CH and LI	Switzerland and Liechtenstein	[X]	[ ]
DE	Federal Republic of Germany	[X]	[X] ** and auxiliary utility model
DK	Denmark		[ ]
FI	Finland		[ ]
FR	France	[X]	(no national title available)
GB	United Kingdom	[X]	[ ]
HU	Hungary		[ ]
JP	Japan		[X] ** Utility Model
KP	Democratic People's Republic of Korea		[ ]
LU	Luxembourg	[ ]	[ ] **
MC	Monaco		[ ] **
MG	Madagascar		[ ]
MW	Malawi		[X] **
NL	Netherlands	[ ]	[ ]
NO	Norway		[ ]
RO	Romania		[ ]
SE	Sweden	[ ]	[X]
SU	Soviet Union		[X] **
US	United States of America		[X] ** Continuation-in-part
EP	all PCT Contracting States for which a European patent may be requested	[ ] ****	these States are those listed above whose names are preceded by the codes AT, CH and LI, DE, FR, GB, LU, NL and SE and (specify names of any others)
OA	OAPI (Cameroon, Central African Republic, Chad, Congo, Gabon, Senegal, Togo)	[X]	OAPI Patent (if other OAPI title desired, specify)**

Space reserved for designating countries which become party to the PCT after the issuance of the present form (October 1, 1981):

* An address for the sending of notifications for a sole applicant or for a common representative may be indicated if no agent has been appointed to represent the applicant or, if there are several applicants, all of them.

** If another kind of protection or a title of addition is desired or if, in the United States of America, treatment as a continuation or a continuation in part is desired, indicate according to the instructions given in the Notes to Box No. V.

*** The applicant's choice of the order of the designations may be indicated by checking the boxes of the designated States with sequential arabic numerals (see also the Notes to Box No. V).

**** When this box is checked, none of the other boxes in the column "European patent" should be checked.

Form PCT/RO/101 (second sheet) (October 1981)

See notes on accompanying sheet

Sheet number 3

Supplemental Box. Use this box in the following cases:

(i) *If more than three persons are involved as applicants and/or inventors:* in such case, write "Continuation of Box No. III" and indicate for each additional person the same type of information as required in Box No. III;

(ii) *If, in Box No. II or any of the sub-boxes of Box No. III, the indication "the States indicated in the 'Supplemental Box'" is checked:* in such case, write "Continuation of Box No. II" or "Continuation of Box No. III" or "Continuation of Boxes No. II and No. III" (as the case may be), indicate the name of the applicant(s) involved and, next to (each) such name, the country or countries (or EP or OA, if applicable) for the purposes of which he/she/it is applicant;

(iii) *If, in Box No. II or any of the sub-boxes of Box No. III, a person indicated as "applicant and inventor" or "inventor only" is not inventor for the purposes of all designated States or for the purposes of the United States of America:* in such case, write "Continuation of Box No. II" or "Continuation of Box No. III" or "Continuation of Boxes No. II and No. III" (as the case may be), indicate the name of the inventor and, next to each name, the country or countries (or EP or OA, if applicable) for the purposes of which the named person is inventor;

(iv) *If there is more than one agent and their addresses are not the same;* in such case, write "Continuation of Box No. IV" and indicate for each additional agent the same type of information as required in Box No. IV;

(v) *If, in Box No. V, the name of any country (or OAPI) is accompanied by the indication "patent of addition," "certificate of addition," or "inventor's certificate of addition," or if, in Box No. V, the name of the United States of America is accompanied by an indication "Continuation" or "Continuation in part";* in such case, write "Continuation of Box No. V" and the name of each country involved (or OAPI), and after the name of each such country (or OAPI), the number of the parent title or parent application and the date of grant of parent title or filing of parent application;

(vi) *If there are more than three earlier applications whose priority is claimed;* in such case, indicate "Continuation of Box No. VI" and indicate for each additional earlier application the same type of information as required in Box No. VI;

(vii) *If, in any of the Boxes, the space is insufficient to furnish all the information;* in such case, write "Continuation of Box No. ..." [indicate the number of the Box] and furnish the information in the same manner as required according to the captions of the Box in which the space was insufficient.

<u>Continuation of Box No. IV:</u>

Washington, George A.
Jones, Franklin F.
Johnson, Lawrence P.

All above attorneys are members of the firm of Miller and Washington. Address, etc., of all is as indicated in Box IV.

<u>Continuation of Box No. V:</u>

United States of America
20 May 1981
222,222

If this Supplemental Box is not used, this sheet need not be included in the Request.

Form PCT/RO/101 (supplemental sheet) (October 1981) See notes on accompanying sheet

Sheet number 4

Box No. VI PRIORITY CLAIM (IF ANY). The priority of the following earlier application(s) is hereby claimed:

	Country (country in which it was filed if national application; one of the countries for which it was filed if regional or international application)	Filing Date (day, month, year)	Application No.	Office of Filing (fill in only if the earlier application is an international application or a regional application)
(1)	US	20 May 1981	222,222	
(2)				
(3)				

(Letter codes may be used to indicate country and/or Office of filing)

When the earlier application was filed with the Office which, for the purposes of the present international application, is the receiving Office, the applicant may, *against payment of the required fee,* ask the following:

[X] the receiving Office is hereby requested to prepare and transmit to the International Bureau a certified copy of the above-mentioned earlier application/of the earlier applications identified above by the numbers (insert the applicable numbers) ..222,222....

Box No. VII EARLIER SEARCH (IF ANY). Fill in where a search (international, international-type or other) by the International Searching Authority has already been requested (or completed) and the said Authority is now requested to base the international search, to the extent possible, on the results of the said earlier search. Identify such search or request either by reference to the relevant application (or the translation thereof) or by reference to the search request.

International application number or number and country (or regional Office) of other application: 222,222 United States of America

International/regional/national filing date: 20 May 1981

Date of request for search:

Number (if available) given to search request:

Box No. VIII SIGNATURE OF APPLICANT(S) OR AGENT

Paul A. Jones
Paul A. Jones
Vice-President
XYZABC Company, Inc.

John A. Doe
John A. Doe
R. Thomas Smith Jr.
R. Thomas Smith Jr.

If the present Request form is signed on behalf of any applicant by an agent, a separate power of attorney appointing the agent and signed by the applicant is required. If in such case it is desired to make use of a general power of attorney (deposited with the receiving Office), a copy thereof must be attached to this form.

Box No. IX CHECK LIST (To be filled in by the Applicant)

This international application contains the following number of sheets:

1. request ______ 4 sheets
2. description ______ 4 sheets
3. claims ______ 1 sheets
4. abstract ______ 1 sheets
5. drawings ______ 1 sheets

Total 11 sheets

Figure number ...1... of the drawings (if any) is suggested to accompany the abstract for publication.

This international application as filed is accompanied by the items checked below:

1. [ ] separate signed power of attorney
2. [ ] copy of general power of attorney
3. [ ] priority document(s) (see Box No. VI)
4. [ ] receipt of the fees paid or revenue stamps
5. [ ] cheque for the payment of fees
6. [X] request to charge deposit account
7. [X] other document (specify) Transmittal letter

(The following is to be filled in by the receiving Office)

1. Date of actual receipt of the purported international application:
2. Corrected date of actual receipt due to later but timely received papers or drawings completing the purported international application
3. Date of timely receipt of the required corrections under Article 11 of the PCT:
4. Drawings [ ] Received [ ] No Drawings

(The following is to be filled in by the International Bureau)

Date of receipt of the record copy:

Form PCT/RO/101 (last sheet) (October 1981) See notes on accompanying sheet

THIS SHEET DOES NOT COUNT AS A PAGE OF THE INTERNATIONAL APPLICATION

APPLICANT	DOCKET NUMBER	This column for use by receiving Office
XYZABC Company, Inc.	PCT-1	

RO/US RECEIPT DATE	INTERNATIONAL APPLICATION NUMBER	SUBMISSION DATE
		01 October 1981

UNITED STATES RECEIVING OFFICE FEE CALCULATION SHEET

FEES SUBMITTED OR AUTHORIZED:

I. TRANSMITTAL FEE —— 35.00 [T]

II. SEARCH FEE —— 300.00 [S]

III. INTERNATIONAL FEE

BASIC FEE

Indicate the number of SHEETS contained in the international application 11.

first 30 sheets —— 215.00 [b1]

remaining ___ sheets X $ ___ = ___ [b2]
(multiply excess over 30 by amount of supplement to Basic Fee)

Add amounts entered in boxes b1 and b2 and enter total in box B.
This figure is the amount of the BASIC FEE —— 215.00 [B]

DESIGNATION FEES

Indicate the number of DESIGNATED STATES for which National patents have been sought and multiply by the amount of the designation fee 2 X $ 50.00 = 100.00 [d1]

Indicate the number of GROUPS of designated States for which regional patents have been sought and multiply by the amount of the designation fee 1 X $ 50.00 = 50.00 [d2]

—Note instructions regarding the application of designation fees below—

Add amounts entered in boxes d1 and d2 and enter total in box D.
This figure is the amount of the DESIGNATION FEES —— 150.00 [D]

Add amounts entered in boxes B and D, and enter total in box I.
This figure is the amount of the INTERNATIONAL FEE —— 365.00 [I]

IV. TOTAL FEES SUBMITTED OR AUTHORIZED:

Add amounts entered in boxes T, S and I, and enter total in the total box. This figure is the total amount of the FEES SUBMITTED or AUTHORIZED —— 700.00 TOTAL

Payment must be made in United States currency. Checks, postal money orders or bank drafts must be made payable to the Commissioner of Patents and Trademarks. Payment may also be made by authorization to charge to a Patent and Trademark Office deposit account.

DEPOSIT ACCOUNT AUTHORIZATION

[X] The RO/US is hereby authorized to charge the total fees indicated above to my deposit account.

[X] The RO/US is hereby authorized to charge any deficiency or credit any overpayment in the total fees indicated above to my deposit account.

00-0000 — *Deposit Account Number*
01 Oct. 1981 — *Date*
George A. Miller — *Signature*

INSTRUCTIONS REGARDING DESIGNATION FEES: *(See reverse side for list of member States)*

Use the space below to indicate, in order, those countries for which the designation fees submitted or authorized are to be applied. Include after the name of the country any indication that a regional patent is sought. If no countries are indicated below, the RO/US will apply the designation fees submitted or authorized to the designated countries in the order in which those countries are listed in the Request.

United States of America
Brazil
Federal Republic of Germany, Regional Patent

Note: Remainder of fees will be paid at the end of priority year.

Form PCT/RO/101 (Annex) (U.S. Version)
U.S. DEPARTMENT OF COMMERCE - Patent and Trademark Office

REISSUES

NOVEMBER 17, 1981

Matter enclosed in heavy brackets [ ] appears in the original patent but forms no part of this reissue specification; matter printed in italics indicates additions made by reissue.

Re. 30,794
HAND SCRAPER
Robert R. Hayes, Euclid, Ohio, assignor to Oatey Co., Cleveland, Ohio
Original No. 4,178,663, dated Dec. 18, 1979, Ser. No. 933,501, Aug. 14, 1978. Application for reissue Oct. 3, 1980, Ser. No. 193,731
Int. Cl.[3] B23D *71/00, 71/04;* B24D *15/04*
U.S. Cl. 29—78 20 Claims

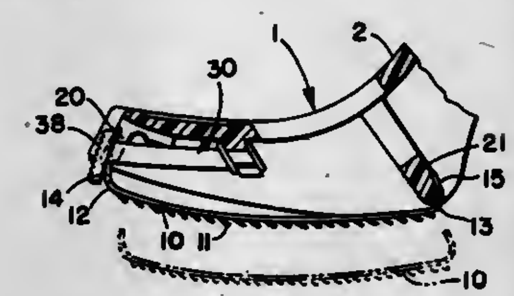

1. A tool holder for a scraping or cutting blade having mounting tabs at opposite ends thereof, said tool holder comprising a body portion having a pair of longitudinally spaced transversely extending blade retaining ribs thereon, said ribs being oppositely angularly disposed and extending downwardly and outwardly from the underneath side of said body portion, the longitudinal spacing between said retaining ribs being slightly greater than the spacing between the mounting tabs on the blade, at least one of the retaining ribs being somewhat flexible to permit slight inward flexing of said one retaining rib during assembly of the blade mounting tabs onto said retaining ribs for retaining the blade on said tool holder.

Re. 30,795
GREEN BALLS FORMED BY AGGLOMERATING WET-COLLECTED FUME PRODUCED IN METALLURGICAL FURNACES
John W. Kreiger, Bethlehem, Pa., assignor to Bethlehem Steel Corporation, Bethlehem, Pa.
Original No. 4,113,481, dated Sep. 12, 1978, Ser. No. 734,771, Oct. 18, 1976. Division of Ser. No. 592,287, Jul. 1, 1975, Pat. No. 4,004,916. Application for reissue Aug. 23, 1979, Ser. No. 69,207
Int. Cl.[3] C22C *33/02, 39/54*
U.S. Cl. 75—256 2 Claims

1. Green balls suitable for charging into steelmaking furnaces and derived from particles of fume formed in steelmaking furnaces, said fume comprising at least one fume taken from the group consisting of wet-collected fume and dry collected water leached fume and mixtures thereof, said particles of fume being spray-dried to substantially instantaneously dry the fume, impacted in a one-point impact step to fracture any spheroids formed during spray-drying whereby new fracture surfaces are formed, and the Blaine surface area of said fume is increased to more than 8000 square centimeters per gram and balled on a balling device whereon moisture required for balling is added to the fume, said green balls consisting of water and said particles of fume and being characterized by having a moisture content of 7 to 12% by weight, a moist compression strength of not less than 15 pounds, and moist strength sufficient to resist breakage when dropped at least 10 times from a height of about eighteen inches onto a steel plate.

Re. 30,796
SCALE REMOVAL, FERROUS METAL PASSIVATION AND COMPOSITIONS THEREFOR
Chester A. Lesinski, Bay City, Mich., assignor to The Dow Chemical Co., Midland, Mich.
Original No. 3,308,065, dated Mar. 7, 1967, Ser. No. 296,464, Jul. 22, 1963. Continuation-in-part of Ser. No. 211,885, Jul. 23, 1962, abandoned. Application for reissue Sep. 14, 1978, Ser. No. 942,212
Int. Cl.[3] C11D *7/32;* C23G *1/14, 1/18;* F28G *9/00*
U.S. Cl. 134—2 18 Claims

1. A process for removing (1) hardness scale and one or more iron oxide-containing deposits of the group of Fe_2O_3-containing and Fe_3O_4 containing deposits or (2) one or more iron oxide-containing deposits of the group of Fe_2O_3-[cotaining] *containing* and Fe_3O_4-containing deposits from a metal surface containing one or more of the aforesaid hardness scale and iron oxide-containing deposits by [conatcting] *contacting* said metal surface with an aqueous alkaline saline solution having a pH of 8 to 11, the active ingredient of which consists of at least one salt of the group consisting of ammonium, amine and hydroxyalkylamine salts of nitrilotriacetic acid, N-2-hydroxyethyliminodiacetic acid, alkylenepolyamine polycarboxylic acids, said amine and hydroxyalkylamine having substituent groups, each of which has up to 5 carbon atoms, for a time sufficient to dissolve said hardness scale and said iron oxide-containing deposits.

12. The process of claim 1 wherein the pH is about 9.

Re. 30,797
ASSOCIATED DYE SALTS AND METHOD OF FORMING COLORED INDICIA THEREWITH
Chester Davis, Cincinnati, Ohio, assignor to Scott Paper Company, Philadelphia, Pa.
Original No. 3,193,404, dated Jul. 6, 1965, Ser. No. 200,052, Jun. 5, 1962. Continuation-in-part of Ser. No. 800,377, Mar. 19, 1959, abandoned, which is a continuation-in-part of Ser. No. 658,249, May 10, 1957, abandoned, which is a continuation-in-part of Ser. No. 533,877, Sep. 12, 1955, abandoned, and Ser. No. 533,878, Sep. 12, 1955, abandoned. Application for reissue Nov. 9, 1977, Ser. No. 850,027
Int. Cl.[3] B41M *5/14*
U.S. Cl. 427—288 7 Claims

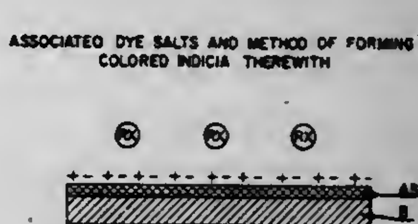

1. The method of printing which comprises applying to an unfired silicate surface characterized by high ionizing power a substantially colorless associated salt of an arylmethane dye base characterized by a logarithmic dissociation constant below 7 and an organic sulfinic acid whereby physical contact of the associated compound and the silicate dissociates the compound to the intensely colored cation of the dye and produces color on the silicate surface.

Re. 30,798
PROCESS FOR PREPARING NITRO-P-PHENYLENEDIAMINES

Milos S. Bil, Forest Hills, N.Y., assignor to Clairol Incorporated, New York, N.Y.

Original No. 3,632,582, dated Jan. 4, 1972, Ser. No. 719,682, Apr. 8, 1968. Continuation of Ser. No. 348,403, Apr. 5, 1973, abandoned, which is a continuation-in-part of Ser. No. 683,758, Nov. 2, 1967, abandoned. Application for reissue Jan. 16, 1977, Ser. No. 806,976

Int. Cl.^{3} C07C *85/04*

U.S. Cl. 564—406 **6 Claims**

1. A process for preparing nitro-p-phenylenediamines of formula:

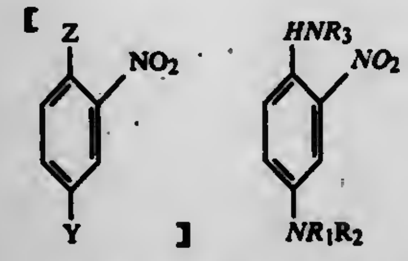

which comprises condensing a fluoronitroaniline of formula:

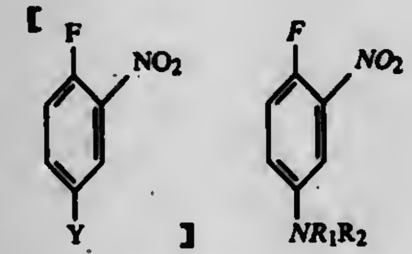

with [ammonia or an] *a primary* amine of formula [HZ wherein:] R_3NH_2

[(a) Y and Z are—NR_1R_2 or]

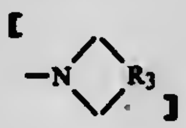

in which:

(b) R_1 and R_2 are the same or different and are selected from the group consisting of hydrogen, [monovalent aliphatic, aryl, aralkyl and cycloalkyl], *alkyl and hydroxyalkyl*, and

(c) R_3 is [a divalent aliphatic radical] *a hydroxyalkyl group, said condensation being carried out at a temperature of no greater than about 110° C.*

Re. 30,799
FABRICATED WELDING WIRE FOR CORROSIVE-RESISTANT STAINLESS

Albert J. Zvanut, Whittier, Calif., and Masahiro Nakabayashi, Ashtabula, Ohio, assignors to Stoody Company, Industry, Calif.

Original No. 4,005,309, dated Jan. 25, 1977, Ser. No. 560,849, Mar. 21, 1975. Continuation of Ser. No. 402,440, Oct. 1, 1973, abandoned. Application for reissue Dec. 21, 1979, Ser. No. 106,317

Int. Cl.^{3} B23K *35/30*

U.S. Cl. 219—74 **7 Claims**

1. An arc-welding electrode comprising:

an elongated metallic sheath defining an internal space;

particulate material in said space of said sheath;

said sheath and said material in composite along the length of said sheath consisting essentially of a major percentage of iron, between about 9.0 and 14.0 percent by weight of chromium, from about 0.01 to about 0.08 percent by weight of carbon, an effective amount of deoxidizer material, up to 0.03 percent by weight each of sulfur and phosphorous, and further including titanium in the form of ferrotitanium having less than 80 percent by weight of titanium but an amount at least [six] *twelve* times the percentage by weight of said carbon in said composite and not in excess of 3% by weight of said electrode, a major portion of said ferrotitanium being reduced to a size not larger than 40 mesh.

Re. 30,800
SOLID-STATE VIDEO CAMERA

Seisuke Yamanaka, Mitaka, Japan, assignor to Sony Corporation, Tokyo, Japan

Original No. 4,069,501, dated Jan. 17, 1978, Ser. No. 685,362, May 11, 1976. Application for reissue Jan. 16, 1980, Ser. No. 112,440

Claims priority, application Japan, May 13, 1975, 50-56912

Int. Cl.^{3} H04N *9/04*

U.S. Cl. 358—44 **5 Claims**

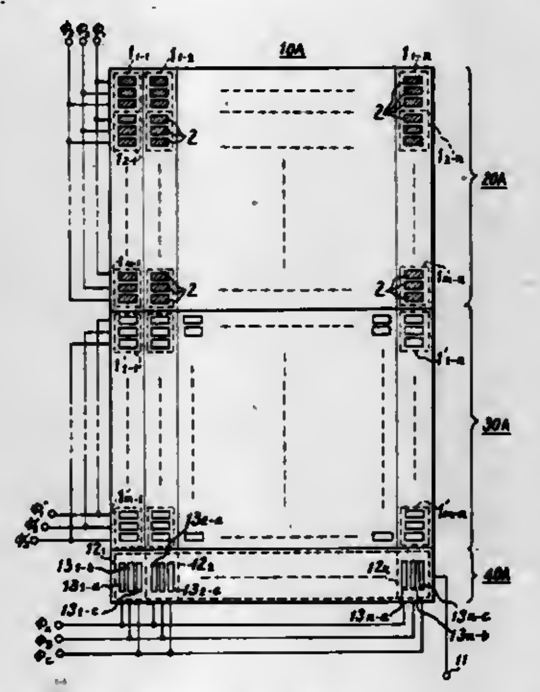

1. A solid state camera comprising:

a plurality of image sensors, each having a plurality of picture-sensing units spaced apart by an alignment pitch of τH,

means for displaying an image simultaneously on each of said image sensors,

means for displacing the image on each sensor by τ_{12} and τ_{13} in a given direction with respect to at least one of said sensors where

$$\tau_{12} = \frac{\tau H}{2\tau}\cos^{-1}\left(\frac{L_3^2 - L_1^2 - L_2^2}{2L_1L_2}\right)$$

$$\tau_{13} = \frac{\tau H}{2} + \frac{\tau H}{2\tau}\cos^{-1}\left(\frac{L_3^2 + L_1^2 - L_2^2}{2L_1L_3}\right)$$

where

τ_{12} is a displaced distance between the images projected on said first sensor and on said second sensor in said given direction,

τ_{13} is a displaced distance between the images projected on said first sensor and on said third sensor in said given direction, and

L_1, L_2 and L_3 are [output signals levels from] *the levels of signals which will form the luminance signal relating to* said first, second and third sensors,

means coupled to said picture sensing units for reading said respective images sequentially in said given direction,

means associated with said reading means for shifting the readout time thereof by a phase of the read-out frequency which corresponds to said displaced distances τ_{12} and τ_{13},

means coupled to said reading means for mixing the respective output signals thereof, and

means for deriving an output from said mixing means.

PLANT PATENTS

GRANTED NOVEMBER 17, 1981

Illustrations for plant patents are usually in color and therefore it is not practicable to reproduce the drawing.

4,790
NECTARINE TREE

Frederic W. Anderson, 826 W. 22nd St., Merced, Calif. 95340

Filed Sep. 15, 1980, Ser. No. 187,849

Int. Cl.^{3} A01H *5/03*

U.S. Cl. Plt.—41 **1 Claim**

1. A new and distinct variety of nectarine tree, substantially as illustrated and described, particularly characterized by the regular and productive bearing of large, exteriorly red, yellow fleshed, early ripening, uniform, symmetrical, globose-oblong fruit which is freestone when fully ripe; the fruit ripening between the May Grand nectarine and the Early Sun Grand nectarine, and having superior shipping and keeping quality in comparison to like-season fruit of other nectarine and peach varieties.

4,791
NECTARINE TREE

Frederic W. Anderson, 826 W. 22nd St., Merced, Calif. 95340

Filed Sep. 15, 1980, Ser. No. 187,850

Int. Cl.^{3} A01H *5/03*

U.S. Cl. Plt.—41 **1 Claim**

1. A new and distinct variety of nectarine tree, substantially as illustrated and described, which is particularly characterized by the regular and productive bearing of yellow-flesh, freestone fruit which ripens intermediate the May Grand nectarine and the Early Sun Grand nectarine; the fruit being of slightly larger average size in comparison to said May Grand nectarine and Early Sun Grand nectarine, and somewhat firmer than the latter.

4,792
NECTARINE TREE

Frederic W. Anderson, 826 W. 22nd St., Merced, Calif. 95340

Filed Sep. 22, 1980, Ser. No. 189,214

Int. Cl.^{3} A01H *5/03*

U.S. Cl. Plt.—41 **1 Claim**

1. A new and distinct variety of nectarine tree, substantially as illustrated and described, characterized by early, regular, and very productive bearing of freestone fruit which—while generally similar to the Aurelio Grand—is somewhat larger, firmer of flesh, and ripens two to three days later.

PATENTS

GRANTED NOV. 17, 1981

ERRATA

For CLASS	See PATENT NO.
116–006	4,300,461
044–056	4,300,921
501–112	4,300,953
376–280	4,300,983
376–459	4,300,984

PATENTS

GRANTED NOVEMBER 17, 1981

GENERAL AND MECHANICAL

4,300,240
COLD WEATHER FACE MASK
Joseph H. Edwards, 7965 Norwood Rd., Salt Lake City, Utah 84121
Filed Sep. 13, 1979, Ser. No. 75,265
Int. Cl.³ A41D *13/00*
U.S. Cl. 2—206 **10 Claims**

1. A cold weather face mask comprised of:
a mask member made of a thin rubber cloth type material which is sized and shaped to fit about the face to extend in width rearward from the face to about the left and right ear areas and to extend in length from an upper edge to a lower edge, wherein
said upper edge extends along a line extending between the cheekbone area below the temples and along the lower part of the eye socket areas contouredly over the bridge of the nose,
said mask member is unitarily formed with a nose piece which angulates outwardly and downwardly at an angle to proximate the angulation of the nose, said nose piece being contoured to fit over the nose and being sized in length to extend from said upper edge to about the tip of the nose,
said mask member has a middle edge in the area above the upper lip which extends essentially the width of the nose piece and which together with the nose piece forms a breathing aperture for the nostrils,
said mask member has a seam joined by means which acts as a front edge to extend convexly from the middle edge to a chin area to form a pocket for the lips and air, and from the chin area arcuately inward under the chin to the lower edge to selectively form a channel in communication with said pocket, and wherein
said mask member has aperture means formed therein proximate the mouth for breathing and speaking; and
securing means adapted to the mask member to secure the mask member to the face of a user.

4,300,241
GARMENT AND METHOD OF MAKING SAME
Cecelia A. Shaull, 27685 Avondale, Inkster, Mich. 48141
Filed Apr. 4, 1980, Ser. No. 137,304
Int. Cl.³ A41B *9/00*
U.S. Cl. 2—400 **4 Claims**

1. A disposable, loose-fitting panty-type garment having an openable crotch portion, said garment comprising first and second panels of substantially identical dimensions and said garment being of relatively simple construction yet possessing the capability of being fitted conveniently to suit the dimensions of a wearer of said garment without change in the dimensions of said panels,
said panels each comprising a narrower-side portion in the shape of an oblong, a first one of the two longer sides of said oblong forming a narrower-side edge of said panel; a central portion in the shape of a first trapezoid, the shorter of the two parallel sides of said trapezoid coinciding with a second and opposite one of the aforesaid two longer sides of said oblong; and a longer-side portion in the shape of a second trapezoid, said second trapezoid having longer and shorter parallel sides, the longer of the parallel sides of said second trapezoid coinciding with the longer of the parallel sides of said first trapezoid and the shorter of the parallel sides of said second trapezoid forming a longer-side edge of said panel parallel to said narrower-side edge of said panel,
each of said panels further containing, in said central portion and in the vicinities of the ends of the lines comprising longer and parallel sides of said first trapezoid, perforations defining a portion of said panel adapted to be re-

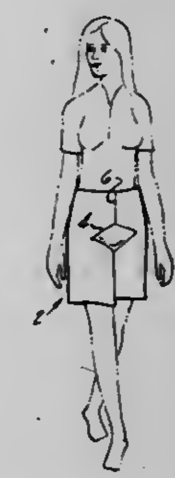

moved for permitting display or, or access to, the genitalia of a wearer of said garment,
said garment being formed by (a) the joining of two of such panels in such manner that the shorter sides of a first one of said oblongs comprising a part of a first one of said panels are joined to the shorter sides of a second one of said oblongs comprising a part of a second one of said panels to form front central and rear central seams of said garment and (b) the joining of the nonparallel sides of the said longer-side portion of each of said panels to form right and left leg portions of said garment,
the portions of the garment so formed which correspond to the portions of said panels which are centrally located with respect to the ends of such panels being capable of being joined to form upper and lower side dart portions of such dimensions as to suit the dimensions of a wearer of the garment.

4,300,242
MOLDED REINFORCED ARTICLE AND METHOD
Pier L. Nava, via Carnovali 100/C, Bergamo, Italy; Carlo Testa, Somma Lombardo, and Davide Frigerio, Gallarate, both of Italy, assignors to Pier Luigi Nava, Bergamo, Italy
Filed Feb. 19, 1980, Ser. No. 122,546
Claims priority, application Italy, Mar. 30, 1979, 21465 A/79
Int. Cl.³ A42B *3/02*
U.S. Cl. 2—412 **7 Claims**

1. A process for manufacturing caps, such as helmets, of reinforced resin, the reinforcement of which is comprised of a tricot or net-like material, said process comprising:
shaping, in the form of a textile cap, the textile reinforcement;
superimposing and binding to each other a plurality of layers, comprised of two or more textile caps, adapted to

form the textile reinforcement, to conform to the male component of a mold having complementary male and female components;
inserting the male part, with the textile reinforcement into the complementary female part of the mold, imparting a

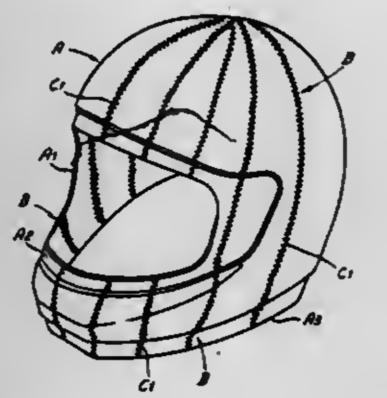

controlled tension to said textile reinforcement and injecting the resin, in the liquid state, into the mold to envelope said textile reinforcement which is subjected to tension;
allowing said resin to solidify to thus obtain the cap, the reinforcement of which is enveloped in the resin in a state of tension.

4,300,243
PROCESS FOR THE PREPARATION OF PRESERVED TRANSPLANTS
Ludwig Baumgartner, Nuremberg, Fed. Rep. of Germany, assignor to Pfrimmer & Co., Pharmazeutische Werke Erlangen GmbH, Erlangen, Fed. Rep. of Germany
Filed Feb. 8, 1980, Ser. No. 119,613
Claims priority, application Fed. Rep. of Germany, Feb. 21, 1979, 2906650
Int. Cl.³ A61F *1/00, 1/24;* F26B *3/00, 5/04*
U.S. Cl. 3—1 **14 Claims**

1. A process for the preparation of biological collagenous material for use as a transplant comprises contacting said material in a continuous manner with fresh amounts of a water-miscible organic solvent selected from the group consisting of methanol, ethanol, propanol, isopropanol, acetone, methylethylketone and mixtures thereof so as to dehydrate said material, and subsequently removing said solvent at a pressure of between 0.1 bar to 1.0 bar.

4,300,244
CARDIOVASCULAR GRAFTS
Jack C. Bokros, Alpine, Calif., assignor to CarboMedics, Inc., San Diego, Calif.
Filed Sep. 19, 1979, Ser. No. 77,047
Int. Cl.³ A61F *1/00, 1/24*
U.S. Cl. 3—1.4 **13 Claims**

1. A vascular prosthesis for implantation in a living body comprising:
a tubular configuration of organopolymeric fabric;
dense, isotropic carbon coating along at least the interior surface of said tubular configuration; and
a biocompatible wire in the form of a helical spring of uniform spring diameter disposed inside said tubular configuration and having an outside spring diameter such that said spring is in surface contact with said carbon coated interior of said tubular configuration;
said spring having a pitch not greater than twice the diameter of said wire;
whereby a blood compatible surface is defined on the interior of said prosthesis where said blood compatible surface consists of at least 50% exposed surface of said spring and the remainder of said blood compatible surface consists of portions of said interior surface of said tubular configuration.

4,300,245
PNEUMATIC LEG
Gerald A. Saunders, Bath, Canada, assignor to Queen's University at Kingston, Kingston, Canada
Continuation-in-part of Ser. No. 101,597, Dec. 10, 1979, abandoned. This application Aug. 25, 1980, Ser. No. 181,153
Int. Cl.³ A61F *1/12*
U.S. Cl. 3—18 **9 Claims**

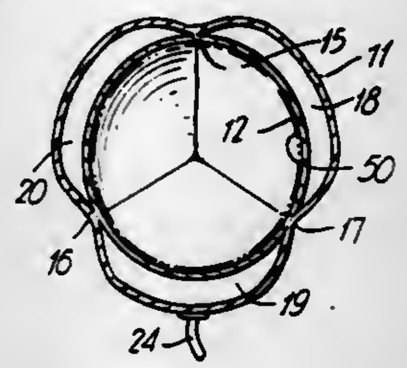

1. An artificial limb comprising a tube like member having an inner wall and an outer wall, each of flexible air impervious material, sealingly joined together at respectively opposite ends of the tube and along at least three lines longitudinally of the tube, said longitudinal lines being spaced apart from one another circumferentially around the tube providing a plurality of side-by-side air inflatable compartments extending longitudinally along the length of the tube, means providing intercommunication of the compartments to equalize pressure in the same, and air passage inlet means into one of the compartments for use in inflating the same, said tube like member being open at one end for insertion of the stump of a limb thereinto and tapering therefrom toward the other end, said compartments when inflated providing a multi-jaw clamping of a stump inserted into one end of said tube and beyond which stump the inner wall of the respective compartments interengage one another stiffening the artificial limb.

4,300,246
POOL CLEANING HEAD
Henry D. Gould, Phoenix, Ariz., assignor to Shasta Industries, Inc., Phoenix, Ariz.
Filed Jun. 6, 1980, Ser. No. 157,118
Int. Cl.³ E04H *3/20*
U.S. Cl. 4—490 **9 Claims**

1. A device for automatically cleaning swimming pool surfaces, said device being adapted for use in a swimming pool cleaning system including a high pressure source which cycles water pressure applied to said device, said device comprising in combination:
a base, said base having an upper surface, a recess in said upper surface, and an opening for conducting water from said high pressure source into said recess;
a cover, said cover being connected to said base to form an interior chamber bounded by said recess and a plurality of outlet ports disposed peripherally about said chamber for conducting jets of water outwardly from said device along an inner surface of said swimming pool; and
rotating means disposed in said chamber for receiving water forced into said chamber from said high pressure source and guiding water into various ones of said outlet ports as water pressure from said high pressure source is cycled, said rotating means rotating in response to water ejected non-radially from said rotating means, said rotating means

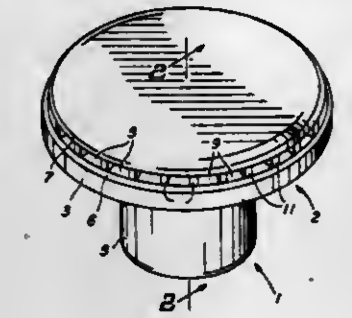

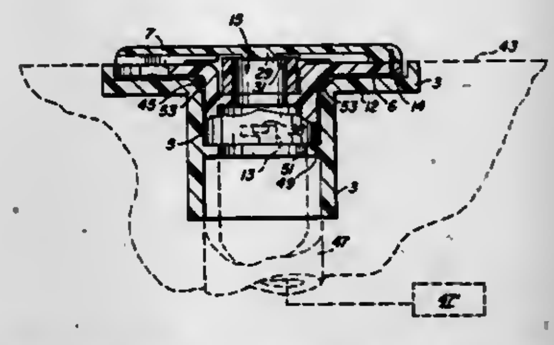

expanding in response to pressure of water forced through said chamber to frictionally engage the walls of said chamber, randomly stopping rotation of said rotating means as the water pressure is cycled.

4,300,247
ENERGY CONSERVATION IN SHOWER BATHING
Charles A. Berg, R.F.D. 1, Box 165, Buckfield, Me. 04220
Filed May 7, 1980, Ser. No. 147,372
Int. Cl.³ A47K *3/22*
U.S. Cl. 4—598 **22 Claims**

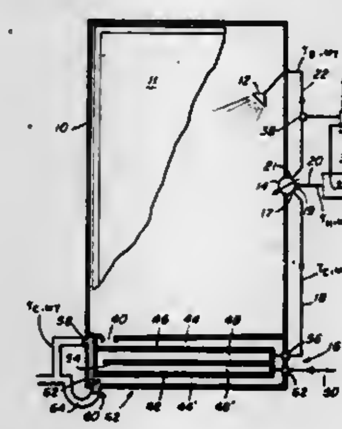

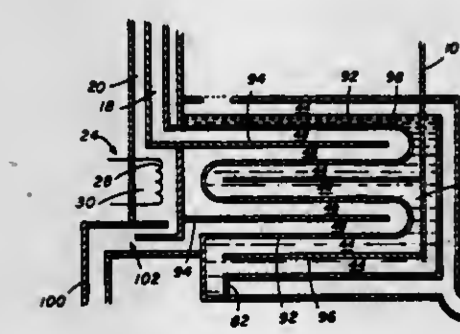

1. An apparatus for bathing comprising a bathing enclosure having a base, a nozzle for passing bathing water through said enclosure, a mixing valve having a hot water inlet, cold water inlet, and bathing water outlet in communication with said nozzle, and a drain in said base, wherein the improvement comprises
a heat exchanger having
a flow-through drain water compartment in communication with said drain,
a drain water outlet below said drain and above at least a substantial portion of the volume of said drain water flow-through compartment, and
a flow-through cold water compartment in communication with the cold water inlet of said mixing valve,
said heat exchanger being operable to cool the drain water and to heat the cold water passing therethrough.

4,300,248
SNAP-IN SOAP DISH LINER FOR BATHROOM FIXTURES
Eugene Dworkin, 16-66 Bell Blvd., Bayside, N.Y. 11360
Filed Feb. 5, 1980, Ser. No. 117,974
Int. Cl.³ A47K *5/00, 5/05;* A47B *67/02*
U.S. Cl. 4—628 **8 Claims**

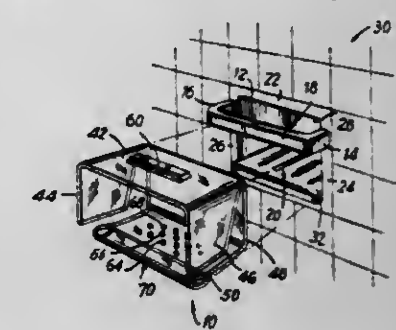

1. A soap dish liner for snap-in insertion into a built-in, bathroom fixture, soap dish recess of the type which is formed in a bathroom wall located adjacent to a bathtub and/or shower area, and which includes a generally U-shaped handle-washcloth support having a pair of side extensions which extend outwardly of the bathroom wall at opposite sides of the soap dish recess, and a main extension which extends between the side extensions at a predetermined distance away from the bathroom wall, all of said extensions bounding an open space in the upper region of the built-in soap dish recess, comprising:
a housing having resilient wall portions spaced apart of each other to bound a soap compartment, said resilient wall portions being manually movable between
a non-installed position in which the resilient wall portions are more closely spaced apart of each other to facilitate convenient insertion of the liner into, and/or removal of the latter from, the built-in recess, and
an installed position in which the resilient wall portions are more widely spaced apart of each other to engage the bathroom wall portions which form the built-in recess with snap-type action for firmly securing the liner in the built-in recess,
one of said resilient wall portions being a top shield wall portion which is juxtaposed with said open space and which shields the built-in soap dish recess from the entry of water from above the built-in soap dish recess, for preventing soap dissolution; and
locking means for preventing the liner from unauthorized removal from the built-in soap dish recess, including a snap-in locking abutment mounted on the top shield wall portion for joint movement with the latter, said locking abutment being receivable in said open space and behind the main extension to snappingly engage the latter.

4,300,249
CHAIR FOR NEUROLOGICALLY IMPAIRED PATIENTS
Francis H. Taylor, 218B South St., Eatontown, N.J. 07724
Filed Mar. 25, 1980, Ser. No. 133,905
Int. Cl.³ A47K *17/00*
U.S. Cl. 4—661 **7 Claims**

1. A contoured chair for use by a neurologically impaired patient for facilitating rehabilitation therapy, comprising:

a contoured back portion for substantially matable engagement with the upper portion of said patient;
two recessed contoured portions affixed to said chair for substantially matable engagement with the back of each of the upper arms of said patient;
a contoured middle portion for substantially matable engagement with the buttocks and upper legs of said patient, said contoured middle portion hingedly secured to said back portion;
a contoured bottom leg portion for substantially matable engagement with the lower legs of said patient, said leg portion hingedly secured to said contoured middle portion;
a footrest portion hingedly secured to said leg portion for supporting said patient's feet;

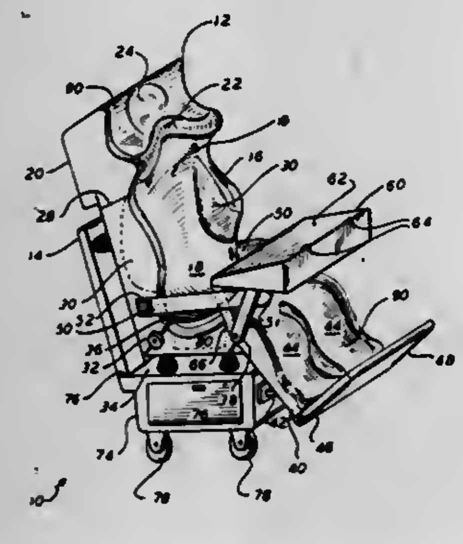

a chair frame for supporting said back, middle and leg portions;
spring means interposed between said frame and said back and middle portions;
an inclined surface hingedly affixed to said middle portion for use by said patient;
two arm rest portions hingedly secured to said back portion for movement in response to said patient's efforts to move said arm rests;
means for moving said frame in a plurality of predetermined horizontal directions.

4,300,250
BEEHIVES
Merritt I. Taylor, 8220 Brookfield Rd., Richmond, Va. 23227
Filed Jan. 25, 1980, Ser. No. 115,449
Int. Cl.³ A01K *47/00, 47/06*
U.S. Cl. 6—1 **20 Claims**

1. A beehive comprising a body and a removable solar unit mountable on and supportable by said body, said body of said beehive having a cluster space spanning and opening onto the upper end thereof and said solar unit having radiant energy transmitting means through which solar energy can penetrate to the interior thereof and an internally housed passive collector means for intercepting and absorbing said solar energy and for thereupon emitting radiant energy into the upper reaches of said beehive body, said passive solar collector means comprising a sheetlike member of thermally conductive material which

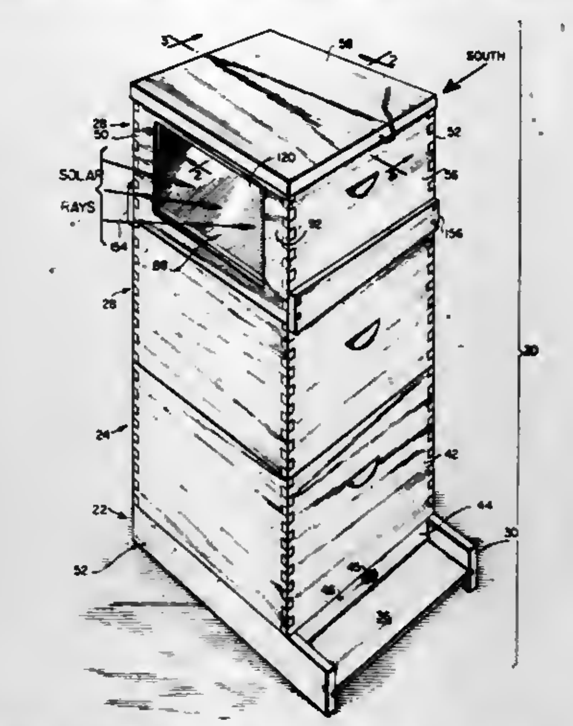

faces and communicates directly with said cluster space on the upper side thereof.

4,300,251
METHOD FOR BLEACHING AND DYEING SPOOLED THREADS
Lieven J. M. E. Santens, Oudenaarde, and Robert M. Vander Beke, Heule, both of Belgium, assignors to Centre Scientifique et Technique de l'Industrie Textile Belge, en abrege: "Centexbel", Brussels and "Santens", Societe de Personnes a responsabilite Limitee, Oudenaarde, both of, Belgium
Filed Apr. 9, 1980, Ser. No. 138,664
Claims priority, application Belgium, Apr. 19, 1979, 57740
Int. Cl.³ D06B *5/18*
U.S. Cl. 8—149.1 **2 Claims**

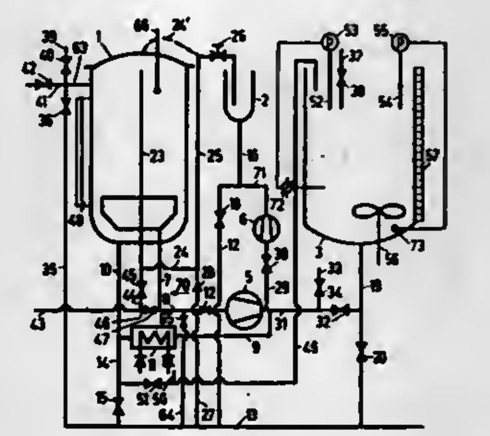

1. A method for treating spooled threads comprising the steps of
impregnating the spooled threads with a cold treatment liquid inside a kier, leaving an air cushion above the liquid inside said kier,
discharging the liquid from the kier through a liquid discharge outlet by feeding steam above the air cushion,
stopping the discharge when the steam reaches the liquid discharge outlet,
and
treating the spooled threads with steam inside the kier.

4,300,252
WHEEL SUPPORT FOR BOW END OF A BOAT
George A. Montooth, Long Beach, Calif., assignor to Recreation Industries Company, Portland, Oreg.
Filed Dec. 18, 1978, Ser. No. 970,754
Int. Cl.³ B63C *13/00*
U.S. Cl. 9—1.2 **4 Claims**

1. A wheel support assembly for a pointed bow, V-bottom boat comprising
(a) a body member having forward and rearward ends and opposite sides,
(b) a wheel on said body member,
(c) a pair of arms having opposite ends,
(d) means connecting one end of said arms to respective sides of said body member,
(e) connecting means on the other end of said arms arranged to connect said other end to opposite sides of a boat rearwardly of the bow,
(f) abutting means on each side of said body member rearwardly of the connection of said arms to said body member,
(g) said arms bearing forcibly outwardly against said abutting means intermediate their ends to cause said other ends of said arms to push inwardly against its side of a boat and provide a laterally rigid draft connection between said body member and a boat,
(h) link means intermediate said arms having opposite ends,
(i) connecting means on one end of said link means connecting said link means to said body member,
(j) and connecting means on the other end of said link means arranged to connect said other end of said link means to an upper point of the bow of a boat.

4,300,253
QUICK ASSEMBLY BLIND FOR BOATS
William L. Anderson, Box 74, Savoy, Ill. 61874
Filed Jul. 23, 1979, Ser. No. 59,657
Int. Cl.³ B63B *17/00, 17/02*
U.S. Cl. 9—1.5 **5 Claims**

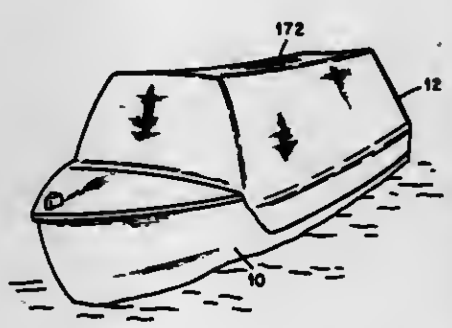

1. In combination with an open-top boat, a quick-assembly blind comprising a generally rectangular framework releasably secured to said boat and extending to a vertical level above the vertical level of the horizontal plane occupied by the gunnels of said boat and including generally horizontal elongated starboard and port support members, and drapable curtain means depending from said framework to a vertical level approximately equal to the vertical level of said gunnels, said curtain means including port and starboard skirt portions extending below the vertical level of said gunnels between the transom and bow portions of said boat and terminating above the water line of said boat, first and second elongated relatively rigid rib means secured to said curtain means at respective locations immediately adjacent the port and starboard gunnels and extending between the transom and bow portions of said boat, and means releasably securing said first rib means to said port gunnel and means releasably securing said second rib means to said starboard gunnel, said framework including means releasably mounting at least one of said support members whereby when one of said support members is released, said curtain means drops to or below the level of its associated gunnel but remains secured to said gunnel, said framework comprising upright standards mounted adjacent the transom and bow of said boat and releasably receiving therebetween said port and starboard elongated support members which support said curtain means, at least one of said standards being mounted for movement to a non-upright position to remove the support for one of said elongated members and its associated portion of said curtain means to permit such portion of said curtain means to drop to a vertical level generally equal to or below the vertical level of the horizontal plane occupied by the gunnels of said boat thereby permitting over-the-gunnel work activities by a user occupying said boat.

4,300,254
RELEASE MECHANISM FOR UNDERWATER DEVICE, SUCH AS SEISMOGRAPH
Maurice J. Prior, Duncanville, Tex., assignor to Mobil Oil Corporation, New York, N.Y.
Filed Apr. 28, 1980, Ser. No. 144,092
Int. Cl.³ B63B *21/52*
U.S. Cl. 9—8 R **4 Claims**

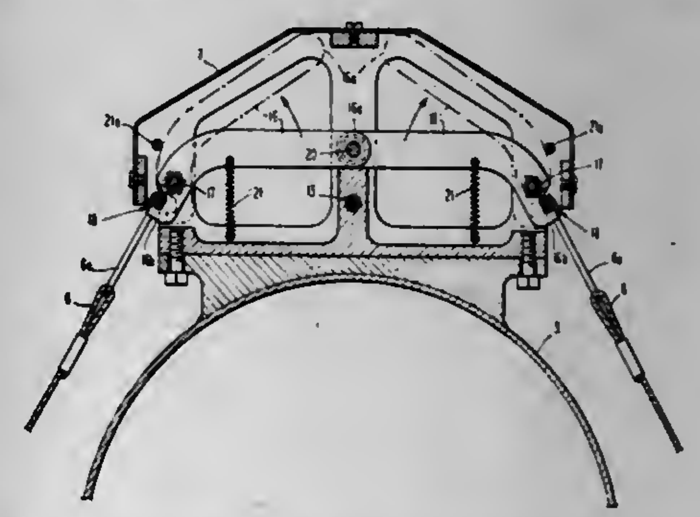

1. In a submersible geophysical exploration unit which is recovered at the water's surface, a mechanism for releasing ballast weight from said unit when submerged comprising:
a pin;
means for attaching said ballast weight to said unit by said pin;
a rotary solenoid having a protruding drive shaft;
a first linkage arm having one end rigidly attached to said protruding drive shaft; and
a second linkage arm rotatably attached at one end to said first linkage arm and at the other end to said pin, whereby said pin is removed by said drive shaft upon activation of said rotary solenoid to release said ballast weight.

4,300,255
FOOT FLIPPER DEVICE
Georges Beuchat, 40 Rue de Cluny, Marseilles, France (13008)
Filed Mar. 5, 1979, Ser. No. 17,102
Claims priority, application France, Apr. 19, 1978, 78 12245
Int. Cl.³ A63B *31/10, 31/12*
U.S. Cl. 9—309 **9 Claims**

1. A flexible foot flipper device for use on the leg of a swimmer comprising:
(a) a shoe having front, heel, and median portions;
(b) a fin of variable inclination relative to said shoe, said shoe

being integral with said fin and divergent therefrom at a point beneath said median portion, said fin having a longitudinal cross-section of generally double curvature, and being freely pivotable beneath said median portion of said shoe.

4,300,256
CLOG-TYPE SHOES AND METHOD FOR THEIR PRODUCTION
Arthur Laganas, Lancaster, Ohio, assignor to R. G. Barry Corporation, Pickerington, Ohio
Filed Aug. 31, 1979, Ser. No. 71,494
Int. Cl.³ A43D *9/00*; A43B *3/12*
U.S. Cl. 12—142 F **8 Claims**

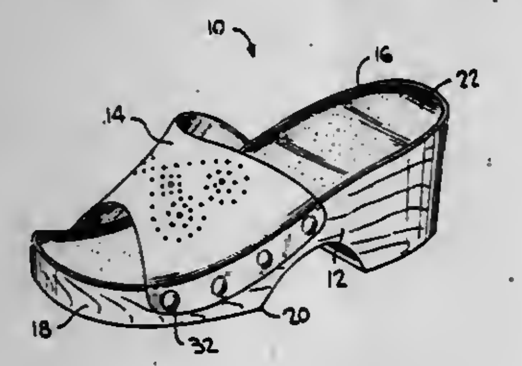

1. A method for producing a clog-type shoe having a sole and a vamp joined to the sole at the forward portion thereof for confining the front portion of a wearer's foot, the method comprising the steps of

forming a sole having the configuration of a conventional clog-type shoe having an upper foot receiving surface, an opposed ground contacting surface and two opposed side surfaces therebetween which are generally perpendicular to the two first-named surfaces and along the length of the sole, a recess is located in each side surface adjacent to the forward portion of the sole and depending from the upper surface thereof adapted to receive a wing portion of the vamp in each such recess, the sole being at least partially formed of a foamed polymeric material,

roughening the upper foot receiving surface and the side surfaces within each of the recesses,

applying an adhesive to the roughened upper foot receiving surface,

placing a sockliner on the upper foot receiving surface to adhesively attach the sockliner to said surface,

skiving each of the wing portions of the vamp which will mate with the sole at the recesses,

applying a coat of an adhesive to each of the roughened recesses and to each of the corresponding skived portions of the wings of the vamp,

thermally activating the adhesive coatings on the sole and vamp,

spotting each of the wing portions of the vamp in its corresponding recess in the sole, and

pressing the vamp and sockliner against the sole to bond the vamp and sockliner to the sole permanently whereby a clog-type shoe is produced having greatly improved comfort over conventional wooden clogs while having a construction of generally equivalent durability.

4,300,257
APPARATUS FOR CLEANING COKE OVEN DOOR
Kazuhiko Ibe, and Kenji Fujita, both of Yokosuka, Japan, assignors to Sumitomo Heavy Industries, Ltd., Tokyo, Japan
Filed Apr. 25, 1980, Ser. No. 144,168
Int. Cl.³ C10B *43/04*
U.S. Cl. 15—93 A **10 Claims**

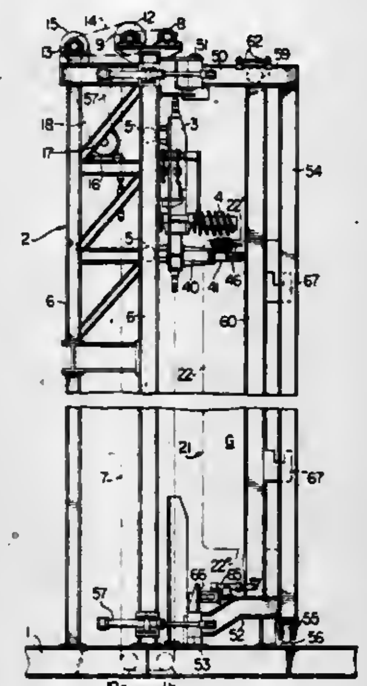

1. An apparatus for cleaning a coke oven door having at its back side a plug adapted to be projected into the coke oven comprising: a base; a main frame structure supported by said base to stand upright therefrom; at least one scraper having a screw-type cutter carried by a rotary shaft; a truck mounting said scraper such that said scraper engages the peripheral surface of said plug to be cleaned while maintaining the axis of the scraper horizontally; scraper driving means for rotatively driving said scraper; guiding means for guiding said truck such that said scraper is moved along the surface to be cleaned; and truck driving means adapted for driving said truck along said guiding means.

4,300,258
PAINT APPLYING TOOL
Fredrick B. Burns, South Milwaukee, and Richard J. Shaw, Brookfield, both of Wis., assignors to E Z Paintr Corporation, Milwaukee, Wis.
Division of Ser. No. 889,241, Mar. 23, 1978, Pat. No. 4,215,448. This application Mar. 24, 1980, Ser. No. 133,688
Int. Cl.³ B05C *1/06*
U.S. Cl. 15—210 R **7 Claims**

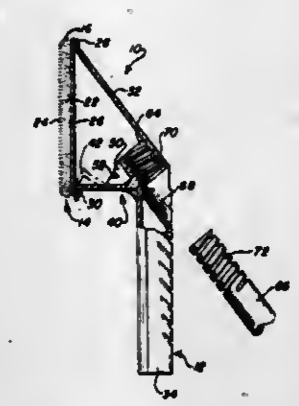

1. A paint applying tool of the type having a base with forward and rear sides and an applicating pad for connection to the base, comprising:

a pair of generally flat surfaces on opposite sides of the base;

a pair of flanges on opposite sides of the applicating pad for slidably mounting the applicating pad on the flat surfaces of the base; and

detent means to prevent relative movement between the applicating pad and the base, said detent means comprising a cantilevered, resilient tab member formed on the base and a depression on the applicating pad for receiving said tab member, said member normally biased to a first position engaging said depression and pivotal between said first position and a second position spaced from said depression.

4,300,259
DEVICE FOR CONNECTING A WIPER BLADE HOLDER TO A WIPER ARM
Guiseppe Maiocco, Rivoli, Italy, assignor to ARMAN S.p.A., Turin, Italy
Filed Jun. 20, 1979, Ser. No. 50,151
Claims priority, application Italy, Jun. 23, 1978, 68478 A/78; Oct. 10, 1978, 69337 A/78
Int. Cl.³ B60S *1/32, 1/40*
U.S. Cl. 15—250.32 **10 Claims**

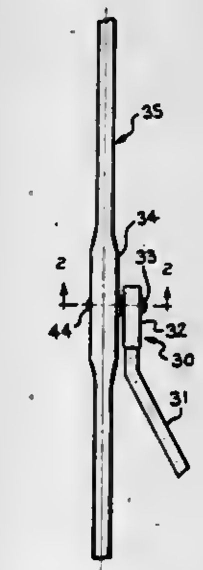

1. In a device for connecting the superstructure of a wiper blade to, and in side-by-side relationship with the upper extremity of a wiper arm, which device comprises a pin which extends through both the superstructure and the wiper arm, the improvement of means operable to limit longitudinal and to prevent rotational movement of the pin relative to the superstructure of the wiper blade, and of means at least partially supported by a portion of the pin which is outside the wiper arm, which means resiliently urge the wiper arm toward the superstructure, and wherein the superstructure acts as a stop limiting the relative movement of the wiper arm in the direction thereof.

4,300,260
MAGNETIC PICK UP ATTACHMENT FOR VACUUM CLEANERS
Claudette D. Hill, 1923 Pembridge Pl., Detroit, Mich. 48207
Filed Nov. 26, 1979, Ser. No. 97,575
Int. Cl.³ A47L *9/00*
U.S. Cl. 15—339 **11 Claims**

2. A magnetic pick up attachment for vacuum cleaners comprising an elongated strip of magnetized material adapted to overlie, connect to and depend from the front face of a vacuum cleaner housing, said strip being flexible, and of rectangular shape, and having a lower longitudinal edge parallel to and adapted for spacing above and adjacent a carpeted floor;

said material being selected from the group consisting of plastic, rubber, Neoprene, fibre and ferrous metal;

therebeing a row of laterally spaced dust apertures extending through said strip adjacent and along the lower longitudinal edge thereof and below said front face for the passage of air and dust therethrough, for entry into the nozzle of the vacuum cleaner;

and a means for securing said strip to said housing.

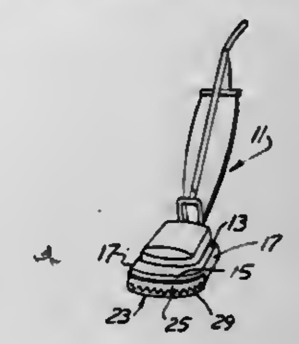

4,300,261
VACUUM CLEANING APPARATUS WITH COMPRESSED AIR MEANS
James C. Woodward, Elizabethtown, and Marion D. Holland, Cox's Creek, both of Ky., assignors to Robert E. Robbins, Elizabethtown, Ky., a part interest
Filed Aug. 15, 1980, Ser. No. 178,456
Int. Cl.³ A47L *5/14*
U.S. Cl. 15—345 **6 Claims**

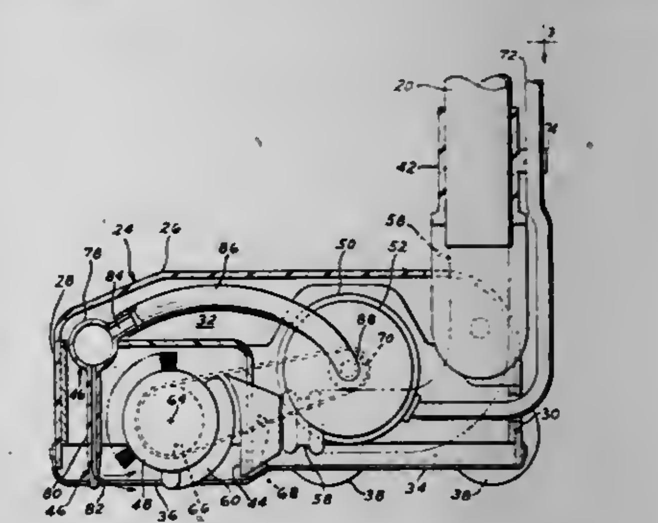

1. Vacuum cleaning apparatus having hood means supported on and movable along a surface to be cleaned and having its open side confronting the surface to form therewith a traveling vacuum chamber, said hood means comprising:

a. elongated brush means positioned transversely across the hood means and capable of rotational movement;

b. electric motor means mounted within the hood means and being provided with drive means joining the motor means to the brush means;

c. jet stream means also positioned transversely across the hood means adjacent the front side of the brush means, said jet stream means having a tubular header supporting a plurality of generally vertical flexible tubes, each tube having an orifice directed at a flat angle toward the working area of the brush means;

d. air compressor means mounted within the hood means, the said motor means having an extension shaft joined to the air compressor means for driving the same, and conduit means joined at one end to the output of the air compressor means and at its opposite end to the tubular header of the jet stream means;

e. suction nozzle means mounted within the hood means adjacent the backside of the brush means; and

f. guide means adjacent the backside of the hood means for controlling the direction of travel of the hood means.

4,300,262
AIR-POWERED VACUUM CLEANER FLOOR TOOL
Stanley J. Rodowsky, Jr., Baltimore, and Donald B. Morgan, Cambridge, both of Md., assignors to Black & Decker Inc., Newark, Del.
Filed Nov. 28, 1979, Ser. No. 98,041
Int. Cl.³ A47L *5/30*
U.S. Cl. 15—387 **8 Claims**

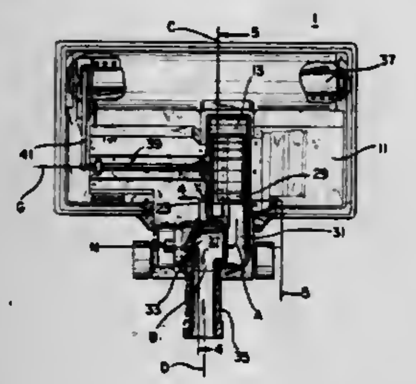

1. An air-powered floor tool for a vacuum cleaner, said floor tool comprising:
(a) a housing having wheels mounted on the bottom thereof;
(b) a rotary agitator means mounted on the bottom of said housing;
(c) wand connector means mounted on the rear of said housing; and
(d) an air-powered turbine motor having a turbine chamber and a rotor, mounted on said housing, said turbine chamber having an air inlet means and an air outlet means, wherein:
(i) said air inlet means comprises a nozzle having an inlet opening in the bottom of said housing and an outlet opening in the turbine chamber of said air-powered motor; and
(ii) said outlet means comprises a first portion including an outlet opening in said turbine chamber and a second portion aligned with said wand connector means, a first passage coupled to said outlet opening for carrying air therefrom in the direction of ejection from said turbine chamber and then turning the flow therethrough 90°, said first passage including said first portion of said outlet means, a second passage continuous with, and perpendicular to, said first passage for carrying the flow of air from said first passage and turning the flow of air therethrough 90°, said second passage including said second portion, the outlet of said second passage being coupled to said wand connector means, wherein the air from said turbine motor flows from said turbine motor in a first direction, is turned 90° and flows in a second direction perpendicular to said first direction, and is then turned another 90° such that it flows parallel to said first direction but is offset therefrom, into said wand coupling means.

4,300,263
PROCESS AND APPARATUS FOR THE PREPARATION OF FLAT-FISH FOR THE BLEEDING
Klaus Götz, Stockelsdorf, Fed. Rep. of Germany, assignor to Nordischer Maschinenbau Rud. Baader GmbH & Co. K.G., Lubeck, Fed. Rep. of Germany
Filed Feb. 5, 1980, Ser. No. 118,672
Claims priority, application Fed. Rep. of Germany, Oct. 23, 1979, 2942731; Sweden, Dec. 7, 1979, 7910095
Int. Cl.³ A22C *25/14*
U.S. Cl. 17—45 **12 Claims**

1. A process for mechanically opening the bloodstream of unbeheaded flat-fish in the region of their abdominal cavities for the purpose of bleeding comprising the steps of:
separating from said fish an area portion substantially tangential to the side line of the fish by means of a cutting stroke in a first plane through the abdominal wall enclosing the abdominal cavity, and
performing a circular tearing stroke in a second plane substantially perpendicular to said first plane in alignment with the belly spokes and back spokes of the fish, for opening the bloodstream, comminuting the intestines and detaching the latter from their anchorings in the abdominal cavity.

4. Apparatus for opening the bloodstream of unbeheaded flat-fish in the region of their belly cavities for the purpose of bleeding comprising:
a rotary cutting tool,
a support member mounted beneath said cutting tool for receiving a flat-fish and supporting the latter in a flat condition thereon,
positioning means for aligning said fish immovably upon said support member with the belly cavity of said fish in registry with said cutting tool,
said cutting tool comprising a rotatably-driven knife sleeve having a sharpened end face facing said support, and at least one tearing element extending radially from said knife sleeve in the vicinity of said sharpened end face,

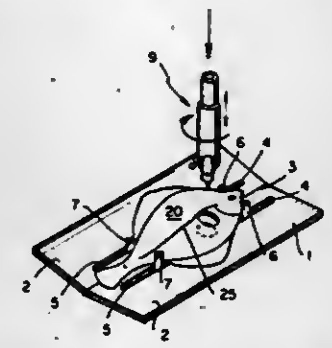

said tearing element having at its free end a terminal tearing portion extending perpendicularly to the longitudinal axis of said knife sleeve,
said knife sleeve being movable between an elevated position in which its sharpened end face and said tearing element are spaced above the fish on said support member, and a lowered position in which the sharpened end face of said rotatably-driven knife sleeve has cut through said fish and said tearing element is located within the fish belly cavity in alignment with said bloodstream therein in a transverse plane substantially perpendicular to the axis of said knife sleeve, whereby upon continued rotation of said knife sleeve, said tearing element moves in a circular path along said transverse plane with said terminal tearing portion performing a circular tearing action on said bloodstream to open the latter.

4,300,264
CLAM BELLY EXTRACTOR
Harold C. Carlson, P.O. Box 06062, Fort Myers, Fla. 33906
Filed Feb. 22, 1980, Ser. No. 123,780
Int. Cl.³ A22C *29/00*
U.S. Cl. 17—51 **10 Claims**

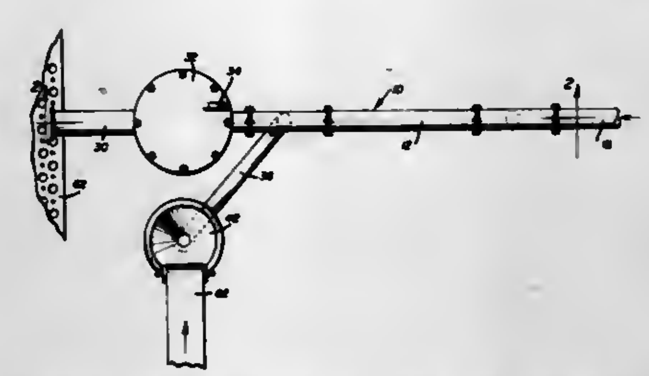

9. A method for separating the bellies of clams from the remainder of the clam meat comprising the steps of introducing a stream of whole clam bodies laterally into an elongated lengthwise moving liquid shearing zone by providing a clam introduction conduit lengthwise discharging laterally into said zone, continuously introducing a high velocity stream of liquid

into said shearing zone in such a manner that said whole clam bodies are asperated into said liquid shearing zone by the vacuum created by said high velocity stream of liquid flowing past the point where said clam body introduction conduit opens into said liquid shearing zone, said high velocity stream of liquid creating forces sufficient to partially shear the bellies from said whole clam bodies, forming a turbulent liquid bath confined on at least one side by an upstanding wall, high speed impacting said bodies generally horizontally against said wall beneath the upper surface of said bath by endwise discharging said liquid stream and clam bodies from said drive pipe onto said wall from a discharge location spaced between 2 and 3½ inches from said wall and thereby subsequently subjecting the impacted clam bodies to the turbulence of said bath.

4,300,265
BREAK-UP ROLLER FOR OPEN-END SPINNING MACHINE
Helmut Heinen, Mönchengladbach, Fed. Rep. of Germany, assignor to Reiners & Furst, Mönchengladbach, Fed. Rep. of Germany
Filed Nov. 27, 1978, Ser. No. 963,757
Claims priority, application Fed. Rep. of Germany, Nov. 25, 1977, 2752591
Int. Cl.³ D01G *19/10*
U.S. Cl. 19—112 **12 Claims**

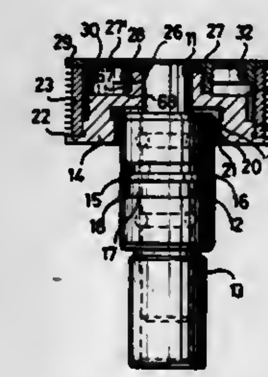

1. Break-up roller with card clothing for an open-end spinning frame comprising a base member, an inherently stable, exchangeable ring carrying the card clothing and being lockingly connected to said base member at a given location, said base member having surfaces each being substantially continuous and extended in one plane except for said given location, and a clamping element clampingly connecting said ring to said base member.

4,300,266
FLATS FOR CARDING MACHINES
Keith Grimshaw, Todmorden, and Brian J. Ennis, Sowerby Bridge, both of England, assignors to The English Card Clothing Company Limited, England
Filed Sep. 13, 1979, Ser. No. 75,030
Claims priority, application United Kingdom, Sep. 14, 1978, 36771/78
Int. Cl.³ D01G *15/24*
U.S. Cl. 19—113 **3 Claims**

1. A releasable wear-sustaining component for fitting on one end of a flat for use in a carding machine, said component having a channel-shaped cross-section, the web of said channel providing a bevel surface for said flat; the flanges of said channel being adapted to engage respectively on the front and rear edges of the flat end, said component further comprising inturned lips on said flanges adapted to engage with the back of the flat end; said releasable component having a resilience such that it is adapted to grip on the flat end for self-retention

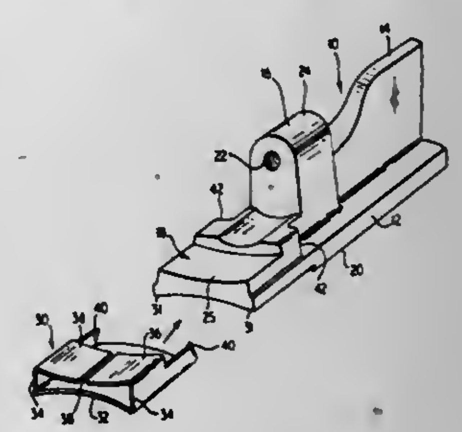

thereon and being further provided with a resilient detent for engagement with a shoulder of the flat end.

4,300,267
TOTAL FIBER RECOVERY METHOD AND APPARATUS
Allen R. Wisch, Westfield, N.J., and Joseph K. Jones, Raleigh, N.C., assignors to Cotton, Incorporated, New York, N.Y.
Filed Feb. 6, 1980, Ser. No. 118,976
Int. Cl.³ D01G *9/00*
U.S. Cl. 19—200 **26 Claims**

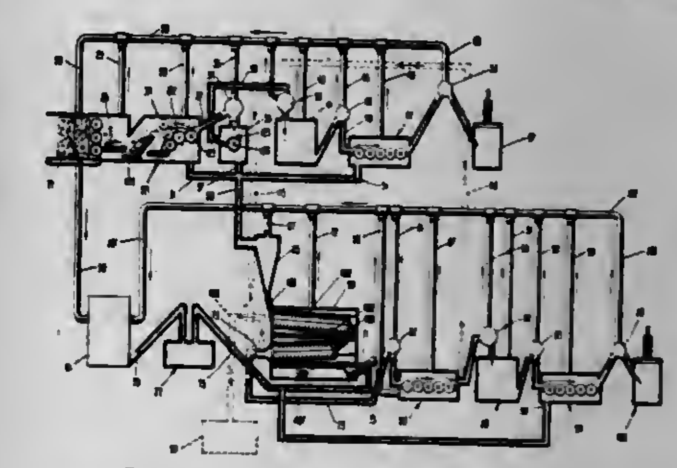

1. A method of recovering fiber from a fiber containing material comprising the steps of:
(I) opening an input feed of material in at least a first opening and cleaning station, said station separating the input feed into a first portion of the input feed primarily comprising trash and motes and a fourth portion of the input feed primarily comprising fibers and relatively smaller trash;
(II) cleaning and carding the fourth portion of the input to obtain a sixth portion of the input comprising a long fiber fraction by subjecting the fibers of the fourth portion to a plurality of abrupt deflections and accelerations in a circular travel direction to assist in cleaning and orienting the fibers of the fourth portion and to assist in disentangling the fibers of the fourth portion and also to cause a fifth portion of the input comprising smaller trash and motes to be freed and separated from the fibers of the fourth portion;
(III) consolidating the first and the fifth portions of the input into a seventh portion of the input;
(IV) cleaning the seventh portion of the input in a drum screen cleaner comprising the steps of:
(A) lifting and tumbling the seventh portion over a plurality of finger-shaped baffles to break up clusters of material and separate the trash; and
(B) allowing the relatively heavy trash to drop through a screen to form a ninth portion of the input feed while retaining the motes and lighter trash to form an eighth portion;
(V) carding and opening the eighth portion, particularly the motes, to obtain a tenth portion of the input primarily

comprising a short fiber fraction and fine trash by subjecting the eighth portion to a plurality of abrupt deflections and accelerations in a circular direction of travel to assist in thinning and opening the motes of the eighth portion and to assist in disentangling the fibers, and also to cause the lighter trash to be broken up into fine particles and loosened;

(VI) cleaning and carding the tenth portion to obtain a twelfth portion of the input comprising a short fiber fraction by subjecting the fibers of the tenth portion to a plurality of abrupt deflections and accelerations in a circular travel direction to assist in cleaning and orienting the fibers of the tenth portion and to tend to separate and to assist in disentangling the fibers of the tenth portion and also to cause an eleventh portion of the input comprising fine trash to be freed and separated from the fibers of the tenth portion.

4,300,268
PAPER CLIPS
Michael A. Wilson, Rocky Mountain National Park, Estes Park, Colo. 80517
Filed Jun. 10, 1980, Ser. No. 158,236
Int. Cl.³ A42F *1/02*
U.S. Cl. 24—67 R **7 Claims**

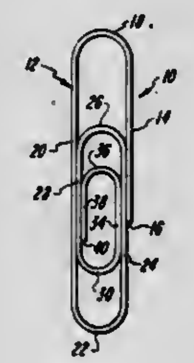

1. A paper clip, composed of a continuous length of wire multiply bent re-entrantly to define a plurality of loops, formed to comprise:

a first leg of said wire continuing in a first direction from one end of said wire a first distance;

a first re-entrant curved loop of said wire continuing from said first leg;

a second leg of said wire continuing from said first loop a second distance in a second direction opposite said first direction;

a second re-entrant curved loop of said wire continuing from said second leg;

a third leg of said wire continuing from said second loop a third distance in said first direction;

a third re-entrant curved loop of said wire continuing from said third leg;

a fourth leg of said wire continuing from said third loop a fourth distance in said second direction;

a fourth re-entrant curved loop of said wire continuing from said fourth leg;

a fifth leg of said wire continuing from said fourth loop a fifth distance in said first direction;

a fifth re-entrant curved loop of said wire continuing from said fifth leg;

a sixth leg of said wire continuing from said fifth loop a sixth distance in said second direction;

said second distance being greater than said first distance, said third distance being less than said second distance, said fourth distance being less than said third distance, said fifth distance being less than said fourth distance, and said sixth distance being less than said fifth distance.

4,300,269
CORD LOCKS OR THE LIKE RESISTANT TO TAMPERING
Ogden W. Boden, 1580 Gaywood Dr., Altadena, Calif. 91001
Filed Feb. 19, 1980, Ser. No. 122,604
Int. Cl.³ F16G *11/00*
U.S. Cl. 24—134 R **23 Claims**

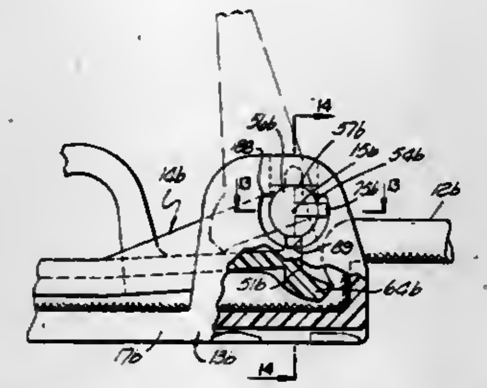

1. A device for gripping an elongated flexible element comprising:

a first member; and

a second member pivotally movable relative to the first member between locking and released positions and acting in said locking position to prevent relative longitudinal movement of said element and in said released position to permit such relative longitudinal movement;

said first and second members having interfitting pivotal connector portions one forming a pivot lug and the other forming a recess pivotally receiving said lug to interconnect the members for said relative pivotal movement;

one of said connector portions being deflectible laterally in a direction away from the other during assembly of the device to pass said lug into said recess;

one of said members having an interlocking projection which in said locking relative position of the members prevents said lateral deflection of said one connector portion in said direction to prevent disassembly of the members in said locking position.

4,300,270
HOUSING FOR TIGHTENING ELEMENTS OF HOSE CLIPS
Heinz Sauer, Ronneburg, Fed. Rep. of Germany, assignor to Rasmussen GmbH, Maintal, Fed. Rep. of Germany
Filed Dec. 4, 1979, Ser. No. 100,060
Claims priority, application Fed. Rep. of Germany, Dec. 18, 1978, 2854675
Int. Cl.³ B65D *63/02*
U.S. Cl. 24—274 R **13 Claims**

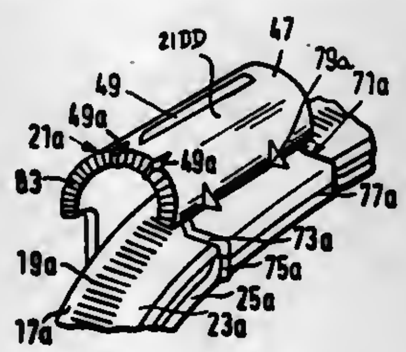

1. In a clip wherein an elongated band having a threaded end portion and two marginal zones which flank said threaded end portion is adapted to be placed around a hose or a like structure, the combination of a housing having a substantially tubular section for said end portion of the band and a single lateral extension, said tubular section being nearer to one than to the other marginal zone and said extension being nearer to said other marginal zone of the band, said tubular section including a bottom wall forming part of said extension, and a tensioning element rotatably mounted in said tubular section and having external threads meshing with the threads of said end portion, said element being rotatable in a predetermined direction to thereby tension the band and said extension being urged toward the structure which is surrounded by the band when said element is rotated in said direction.

4,300,271
CLAMPING DEVICE FOR A SLIDING MOUNT
Gerhard Wohlhaupter, Frickenhausen, Fed. Rep. of Germany, assignor to Emil Wohlhaupter & Co., Frickenhausen, Fed. Rep. of Germany
Filed Aug. 29, 1980, Ser. No. 182,576
Claims priority, application Fed. Rep. of Germany, Oct. 9, 1979, 2940864
Int. Cl.³ F16C *17/00*
U.S. Cl. 29—1 A **6 Claims**

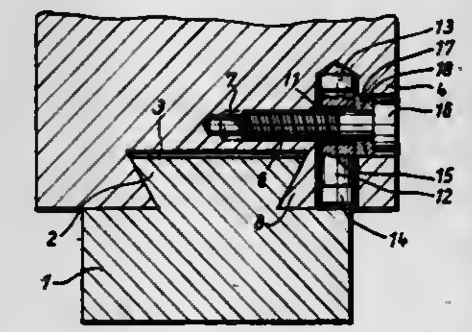

1. In a sliding mount having a guide body provided with a guide groove, a slide block, and a guide projecting from said slide block and slidably mounted in said guide groove, a clamping device comprising a slot in the guide body extending parallel to said guide groove and defining a clamping part on the guide body between the slot and the groove, and at least one screw arranged to press the clamping part against said guide, the clamping device further comprising at least one cavity within the guide body, and a bolt located with a clearance within said cavity, one end of the bolt being within the unslotted part of the guide body and the other end of the bolt being adjacent said clamping part, wherein said screw extends within a threaded bore in said guide body such that when said screw is screwed into said bore it displaces said bolt such that said other end of said bolt presses against the clamping part.

4,300,272
HIGH VACUUM CONTINUOUS CYCLE FABRICATION FACILITY
Erich Hafner, Tinton Falls, N.J., and Robert J. Ney, Belleair, Fla., assignors to The United States of America as represented by the Secretary of the Army, Washington, D.C.
Filed Dec. 10, 1979, Ser. No. 102,093
Int. Cl.³ H01L *41/22*
U.S. Cl. 29—25.35 **15 Claims**

1. In a high vacuum fabrication facility including a plurality of intercoupled in-line replaceable modular processing chambers for cleaning, baking, plating and sealing components into packaged units, said chambers including means for being individually evacuated irrespective of the vacuum state of any other of said chambers and including transport means within each chamber for conveying a tray containing at least one set of components, said tray being conveyed along a common center line through said facility, the improvement comprising in combination:

input means;

a first high vacuum chamber coupled to said input means and including means for separately cleaning the individual surfaces of said components with ultra-violet light;

a second high vacuum chamber coupled to said first chamber and including means for separately heating said components to a predetermined elevated temperature;

a third high vacuum chamber coupled to said second chamber and including means for depositing a first layer of metallization on one component of said at least one set of components;

a fourth high vacuum chamber coupled to said third chamber and including means for depositing the second layer of metallization on said one component;

fifth high vacuum chamber coupled to said fourth chamber and including an offset interior generally cylindrical heating chamber adapted to substantially envelop said tray and having longitudinally extending heater means adapted to contact said tray for heating said set of components and additionally sealing ram means coupled to one end of said heating chamber and sealing said set of components together in a composite unit;

a sixth high vacuum chamber coupled to said fifth chamber and including means for acting as an exit chamber; and

exit means coupled to said sixth chamber.

4,300,273
METHOD FOR MAKING LAMINATED SPACER PLATE FOR ENGINES
David A. Lockhart, Bartonville, Ill., assignor to Caterpillar Tractor Co., Peoria, Ill.
Division of Ser. No. 955,083, Oct. 26, 1978, Pat. No. 4,211,205. This application Nov. 19, 1979, Ser. No. 95,857
Int. Cl.³ B23P *15/00*
U.S. Cl. 29—156.4 R **7 Claims**

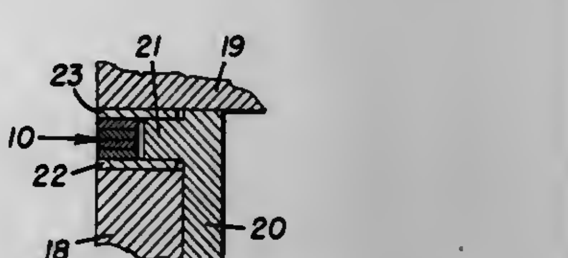

1. A method for preforming and mounting a laminated spacer plate (10) in an internal combustion engine to space the head (19) and block (18) thereof at substantially the thickness of a support flange (21) of each cylinder liner (20) employed in said engine comprising the steps of

forming a plurality of openings (15,16,17,40) through each of a plurality of separate sheets (11-14),

aligning said sheets (11-14) in superimposed relationship relative to each other to align at least some of said openings (15,16,17,40) with respect to each other,

securing said sheets (11-14) together to form a laminated spacer plate (10) having a composite thickness at least substantially the same as the thickness of the support flange (21) of said liner (20),

mounting said laminated spacer plate (10) in sandwiched

relationship between the head (19) and block (18) of said internal combustion engine so that the laminated spacer plate (10) is seated adjacent the support flange (21) of each cylinder liner (20), and

mounting a sealing gasket (22,23) between said spacer plate (10) and each of said head (19) and said block (18).

4,300,274

METHOD OF MANUFACTURING CONNECTING ROD FOR AXIAL CYLINDER-TYPE RECIPROCATING PISTON ENGINE

Hermann Papst, D-7742 St. Georgen, Schwarzwald, Fed. Rep. of Germany

Division of Ser. No. 874,501, Feb. 2, 1978, Pat. No. 4,207,779. This application Oct. 31, 1979, Ser. No. 90,027

Claims priority, application Fed. Rep. of Germany, Feb. 2, 1977, 2704150

Int. Cl.^{3} B23P *15/00*

U.S. Cl. 29—156.5 A **8 Claims**

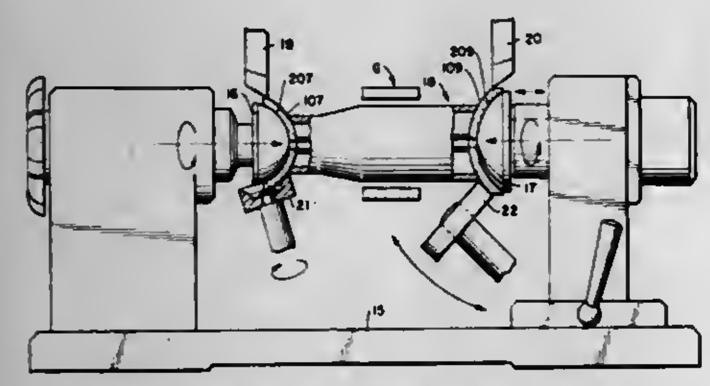

1. A method of manufacturing a piston connecting rod for a reciprocating axial cylinder-type engine, comprising the steps of:

providing a tubular shaft;

turning the respective ends of said tubular shaft so as to form oblique annular edges; and

welding hollow spherical shells at the respective annular edges of said tubular shaft, wherein said method includes forming each of said spherical shells by providing a sheet metal plate and forming the sheet metal plate into a spherical shell including inner and outer spherical surfaces, and wherein said welding step includes welding the hollow spherical shells at the respective annular edges of said tubular shaft such that the inner spherical surfaces thereof extend radially outwardly with respect to a longitudinal axis of the tubular shaft beyond the respective ends of the tubular shaft; and

wherein said method further comprises the steps of concentrically, grinding and rolling surfaces of the spherical shells after said welding.

4,300,275

METHOD OF MANUFACTURING A RADIANT ENERGY COLLECTING OR EMITTING ELEMENT

Jay C. McLaughlin, Santa Rosa, Calif., assignor to General Thermal Corporation, Santa Rosa, Calif.

Division of Ser. No. 857,133, Dec. 5, 1977, Pat. No. 4,217,886. This application Jan. 12, 1979, Ser. No. 2,997

Int. Cl.^{3} B23P *15/26*

U.S. Cl. 29—157.3 C **4 Claims**

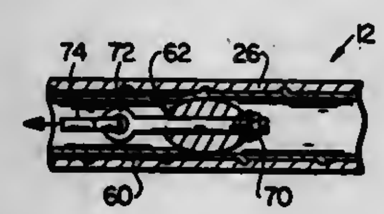

1. A method of manufacturing a radiant energy collecting or emitting element comprising the steps of forming grooves along the central bore of an absorber/emitter plate by drawing a mandrel through the bore with the mandrel including peripheral lands having an outer diameter greater than the inner diameter of the bore whereby the lands cold form the grooves, placing a ductile tube coaxially within the bore, and expanding the tube radially outwardly into intimate surface contact along the length of the bore and into the grooves to form lands which interlock with the grooves to preclude relative displacement between the tube and the plate.

4,300,276

FLEXIBLE PIPE INSERTER

Johnny L. Davis, 2600 Video St., Opelika, Ala. 36801

Filed Feb. 25, 1980, Ser. No. 124,286

Int. Cl.^{3} B23P *19/04*

U.S. Cl. 29—234 **3 Claims**

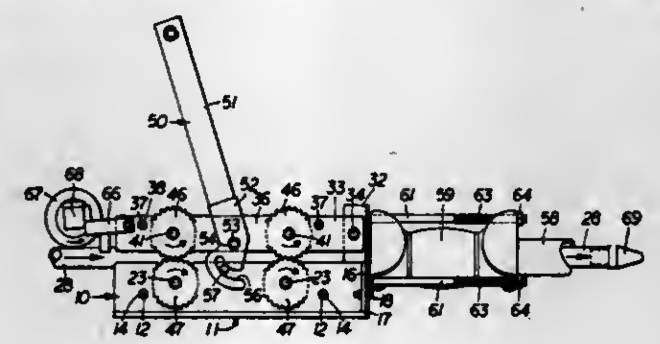

1. Apparatus for inserting a flexible pipe into a larger size pipe comprising,

(a) a lower roller assembly having at least one lower roller adapted to engage and support said flexible pipe adjacent the end of said larger size pipe into which said flexible pipe is to be inserted,

(b) an upper roller assembly mounted above said lower roller assembly and having at least one upper roller adapted to engage the surface of said flexible pipe opposite said lower roller, an elongated upstanding lever arm having depending, spaced apart legs adapted to extend along opposite sides of said upper roller assembly and said lower roller asembly and pivotally connected to one of said roller assemblies,

(d) cooperating cam elements carried by said depending legs and by opposite sides of at least one of said roller assemblies and adapted to engage each other in response to pivotal movement of said lever arm to move said roller assemblies selectively toward and away from each other so that upon movement of said upper roller assembly and said lower roller assembly toward each other said lower roller and said upper roller are moved into driving engagement with said flexible pipe, and

(e) drive means for rotsting said upper roller and said lower roller in a direction to push said flexible pipe into said larger size pipe while said lower roller an said upper roller are in driving engagement with said flexible pipe.

4,300,277

PRESSURE FILTERS

Norman O. Clark, Par, England, assignor to English Clays Lovering Pochin & Company, Ltd., St. Austell, England

Continuation-in-part of Ser. No. 856,493, Dec. 1, 1977, abandoned. This application Oct. 22, 1979, Ser. No. 87,208

Claims priority, application United Kingdom, Dec. 1, 1976, 50191/76

Int. Cl.^{3} B03B *11/00*

U.S. Cl. 29—450 **5 Claims**

1. A method for emplacing or replacing a filter element of a tube pressure filter, the tube pressure filter comprising (a) a pair of generally coaxial inner and outer tubular bodies arranged one within the other and adapted to be supported in a generally upright position; (b) an impermeable elastic sleeve disposed within and secured to the outer tubular body; (c) a

filter element disposed around and supported by the inner tubular body; (d) first outlet means whereby filtrate which has passed through the filter element can be discharged from the tube pressure filter; and (e) second outlet means whereby solids retained on said filter element can be discharged from the tube pressure filter, wherein the inner tubular body comprises a cylindrical section around which central section there is disposed the filter element, and upper and lower end sections, each of which end sections includes an enlarged portion of greater diameter than said cylindrical central section, and wherein the arrangement is such that in a first operating condition of the tube pressure filter said second outlet means is closed and the tubular bodies cooperate with each other to define a closed annular chamber which is divided into generally coaxial and non-intercommunicating inner and outer compartments by said impermeable elastic sleeve, the inner compartment having an inlet for feed material (comprising a mixture of a liquid and a particulate solid) and the outer compartment having an inlet for hydraulic fluid under pressure; and in a second operating condition of the tube pressure filter said

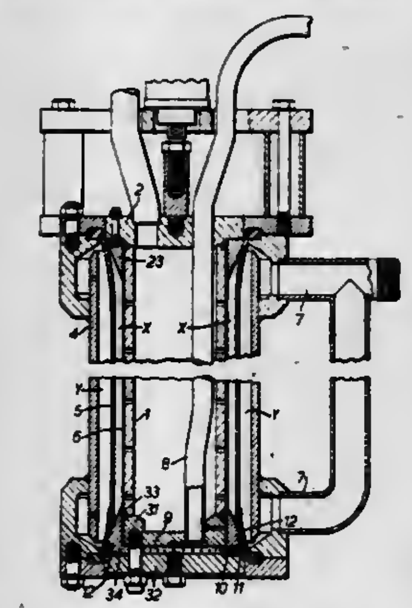

second outlet means is open to enable the particulate solid to be discharged from the inner compartment; and said method for emplacing or replacing said filter element comprising: fabricating said filter element as a filter cloth sleeve which is tailored from a woven material so that the warp and/or the weft filaments of said woven material extend helically around the inner tubular body on which the filter element is supported at a helix angle in the range of from 9° to 30°; the said filter cloth sleeve being stretchable laterally in the range of from about 8% to about 20%, and the said sleeve having an unstretched diameter which is at least 5% larger than the diameter of the cylindrical center section of the inner tubular body of the tube pressure filter; whereby said sleeve may be stretched transversely or along the length thereof; and whereby emplacing or replacing of said sleeve at said tube pressure filter may be effected by stretching said sleeve transversely of its length, drawing said sleeve over said enlarged portion of said end section, and thereupon stretching said sleeve along the length of said central section, and applying means to retain said sleeve in position.

4,300,278

TOOL EXCHANGER FOR A MACHINE TOOL

Kenji Nomura, Aichi; Akira Tsuboi, Kariya, and Kunimichi Nakashima, Anjoh, all of Japan, assignors to Toyoda Koki Kabushiki Kaisha, Kariya, Japan

Filed Oct. 25, 1979, Ser. No. 88,154

Claims priority, application Japan, Oct. 27, 1978, 53-132932

Int. Cl.^{3} B23Q *3/157*

U.S. Cl. 29—568 **6 Claims**

1. A tool exchanger for exchanging a tool received in a machine tool spindle with another tool held in an exchange station, comprising:

an exchanger base;

an arm shaft having an axis carried on said exchanger base for rotational and axial movements;

an exchange arm fixedly mounted at a middle portion thereof on said arm shaft and extending perpendicularly of said arm shaft, said exchange arm being formed at opposite ends thereof with a pair of semi-circular openings for holding said tools;

first drive means connected to said arm shaft for axially moving said arm shaft to thereby remove at least one of said tools held by said exchange arm from, and insert another one of said tools into, said tool spindle;

second drive means connected to said arm shaft for rotating said arm shaft to thereby bring one of said tools held by said exchange arm into axial alignment with said tool spindle;

a pair of gripping plungers received in said exchange arm and adapted for sliding movements in a radial direction of said axis of said arm shaft;

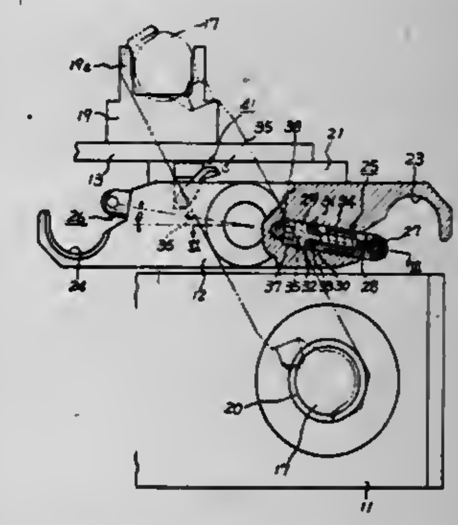

biasing means interposed between said exchange arm and each of said gripping plungers for urging each of said gripping plungers to respectively extend toward said opposite ends of said exchange arm so as to thereby grip said tools held in said semi-circular openings;

locking means provided in said exchange arm and movable between first and second positions to respectively permit and inhibit the inward retraction movements of said gripping plungers; and

plunger control means for retracting at least one of said gripping plungers inwardly of said exchange arm against the force of said biasing means when said locking means is in said first position,

wherein said plunger control means comprises a control member protruding from each of said gripping plungers; and

means for operating at least one of said control members to thereby retract said gripping plunger associated therewith inwardly of said exchange arm against the force of said biasing means when said locking means is in said first position.

4,300,279

METHOD FOR THE MANUFACTURE OF A MONOLITHIC, STATIC MEMORY CELL

Armin Wieder, Gauting, Fed. Rep. of Germany, assignor to Siemens Aktiengesellschaft, Berlin & Munich, Fed. Rep. of Germany

Filed Jul. 16, 1980, Ser. No. 169,528

Claims priority, application Fed. Rep. of Germany, Aug. 31, 1979, 2935254

Int. Cl.^{3} H01L *21/90*

U.S. Cl. 29—571 **19 Claims**

1. A method of manufacturing a monolithic, static memory cell in which a semiconductor body of a first conductivity type

carries a semiconductor layer of a second, opposite conductivity type, in which the semiconductor layer includes a region therein at its boundary surface of the first conductivity type and a first drive line connected to the region and to a second terminal, in which a gate connected to a third terminal is separated from the semiconductor layer by an insulating layer, in which the gate is located adjacent to a first zone in the semiconductor layer, in which a conductive coating separated from the semiconductor layer by a thin insulating layer admitting a tunnel current between the boundary surface and the conductive coating is located over a second zone of the semiconductor layer, in which the conductive coating is connected to a fourth terminal, comprising the steps of:

(a) forming boundaries defining the extent of the memory cell in the semiconductor layer;
(b) applying a gate oxide layer on the boundary surface of the semiconductor layer;
(c) applying a highly-doped first polycrystalline layer on the gate oxide layer.
(d) applying a first intermediate oxide layer on the polycrystalline layer;
(e) etching the structure to form a gate and a second drive line;
(f) etching the ends of the second drive line to form recesses;
(g) filling the recesses with an insulating material;

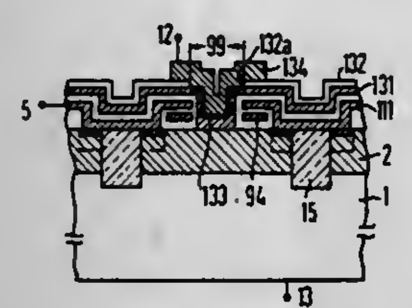

(h) removing the gate oxide layer adjacent the structured portions;
(i) applying a highly-doped second polycrystalline silicon layer on the first intermediate oxide layer;
(j) applying a second intermediate insulating layer on the second polycrystalline silicon layer;
(k) etching the first drive line contacting the region to structure the same;
(l) ion implanting to dope the region contacting the first drive line;
(m) etching to form a recess down to the boundary surface of the semiconductor layer;
(n) etching portions of the first and second drive lines which extend into the recess of step (m);
(o) oxidizing the bottom of and the sides of the recess of step (m) to fill the voids left in the step (n);
(p) etching the oxide formed in the bottom of the recess of step (o) to remove the same;
(q) applying a third polycrystalline layer;
(r) applying a third intermediate layer on the third polycrystalline layer;
(s) etching an aligned recess through the third polycrystalline line and third intermediate insulating layers;
(t) applying a conductive coating in the aligned recesses; and
(u) applying a terminal to the conductive coating.

4,300,280
HAIR DRYER AND METHOD FOR PRODUCING A HEATING ELEMENT THEREFOR
Rudolf Majthan, Schwalbach; Rolf Stühler, Wl-Delkenheim, both of Fed. Rep. of Germany; Raymond G. Parsonage, Maidenhead, and Charles C. Packham, Wockingham, both of United Kingdom, assignors to Braun A.G., Kronberg, Fed. Rep. of Germany
Filed Mar. 25, 1980, Ser. No. 133,740
Claims priority, application Fed. Rep. of Germany, Aug. 26, 1978, 2837316
Int. Cl.³ H05B *3/00*
U.S. Cl. 29—611 **3 Claims**

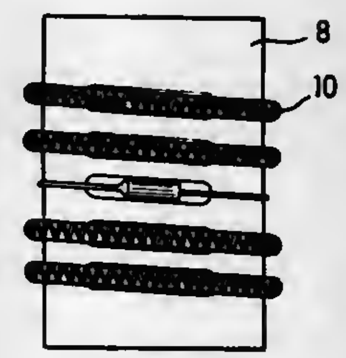

1. A method for making a cylindrical electrical heating element for hair dryers, comprising the following steps:
(a) bending a flat strip of material made of Mekanite between two rollers,
(b) flattening the bent strip of material,
(c) transversely wrapping a heating wire around the strip of material, and
(d) bending the strip of material with the heating wire wrapped therearound into a cylinder.

4,300,281
METHOD OF MAKING ELECTRIC FUSE HAVING FOLDED FUSIBLE ELEMENT AND HEAT DAMS
Robert J. Panaro, Byfield, Mass., assignor to Gould Inc., Rolling Meadows, Ill.
Division of Ser. No. 932,020, Aug. 8, 1978, Pat. No. 4,216,457. This application Jan. 29, 1980, Ser. No. 116,440
Int. Cl.³ H01H *69/02*
U.S. Cl. 29—623 **2 Claims**

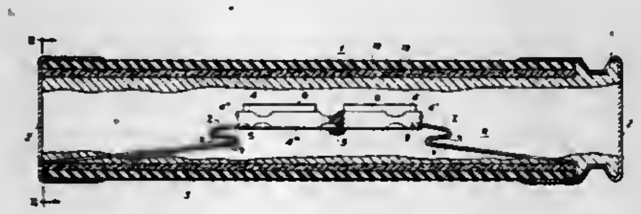

1. In manufacturing a fusible element for an electric fuse comprising a first relatively wide section having points of reduced cross-section of silver and further comprising a pair of second relatively narrow transversely folded heat-dam-strip sections the steps of transversely folding a pair of separate strips of a sheet metal having a smaller conductivity than silver and thus forming said second pair of sections separate from said first section, and thereafter conductively connecting each of the ends of said first section to one of the ends of said pair of second sections.

4,300,282
FREE STANDING INSERTION TOOL
John R. Busyea, Kernersville; Jess B. Ferrill, Greensboro; Ray A. J. Hutchinson, and Ronald G. Sergeant, both of Winston-Salem, all of N.C., assignors to AMP Inc., Harrisburg, Pa.
Filed Aug. 16, 1979, Ser. No. 67,076
Int. Cl.³ H01R *43/04*
U.S. Cl. 29—751 **5 Claims**

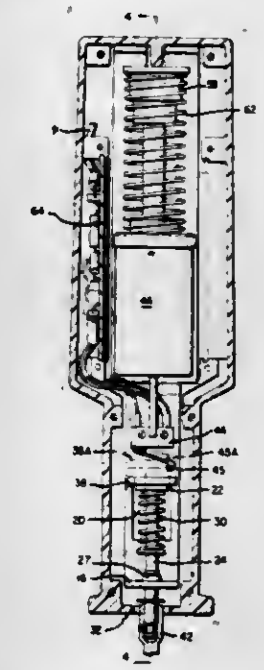

1. In a force applying tool having a toolhead and a solenoid for driving the toolhead, the improvement comprising:
A first coil spring encircling said toolhead and being in compression upon movement of said toolhead toward said solenoid,
a first switch actuated by said toolhead movement toward said solenoid to actuate said solenoid,
a trigger circuit coupled between said first switch and said solenoid to provide discharge of voltage to windings of said solenoid in excess of maximum rated voltage of said solenoid,
said toolhead includes a strike plate initially spaced from said solenoid armature and said first switch,
means in said case for limiting outward displacement of said toolhead,
said circuit includes a first capacitor coupled to said source through a first diode and coupled in parallel with a first resistor through a second switch in a first position,
said circuit further includes an auxiliary first SCR having its anode coupled to said source through a second diode, and coupled to neutral potential through a second capacitor, said second capacitor being coupled to said source through said second diode,
said first SCR having its gate coupled to its cathode through a second resistor and coupled to neutral potential through a Zener diode,
said first SCR having its cathode coupled to neutral potential through a third diode and a third resistor, and
said circuit further includes a second SCR having its anode coupled to said solenoid windings and its cathode coupled to neutral potential, said second SCR having its gate coupled by said first switch to the junction of said third diode and said third resistor,
said second switch in a second position connecting said first capacitor to neutral potential through said Zener diode and connecting said first capacitor to said cathode of said first SCR and to the gate of said first SCR through said second resistor,
said toolhead is displaced in a direction inwardly of said case to engage and actuate said first switch and to move said strike plate away from said means,
said solenoid is actuated by said first switch to propel said solenoid plunger into said strike plate and propel said toolhead forcibly outward, and provide a tool stroke for inserting one or more insulated wires into and along a wire receiving and gripping slot of an electrical terminal.

4,300,283
APPARATUS FOR MANUFACTURING SLIDE FASTENERS
Minoru Ueda, Kurobe, Japan, assignor to Yoshida Kogyo K.K., Tokyo, Japan
Filed Dec. 21, 1979, Ser. No. 105,899
Claims priority, application Japan, Dec. 29, 1978, 53-162847
Int. Cl.³ B23P *19/04*
U.S. Cl. 29—766 **6 Claims**

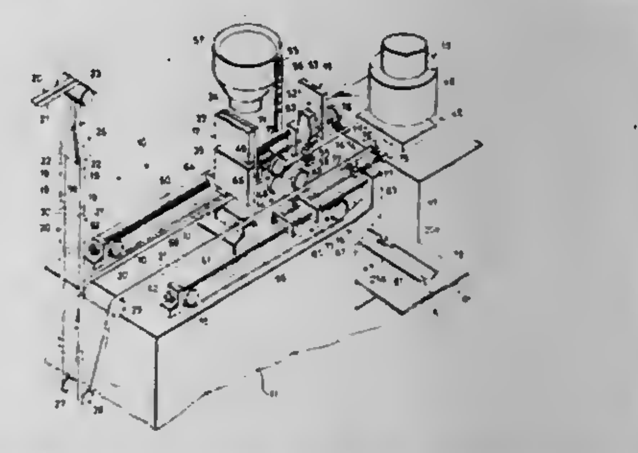

1. An apparatus for manufacturing slide fastener, comprising:
(a) means for severing a pair of continuous slide fastener stringers transversely across one of longitudinally spaced, transversely aligned pairs of element-free portions;
(b) means for molding a separable end stop including a pin and a receptive box respectively on the leading ends of the slide fastener stringers;
(c) grip means reciprocable substantially between said severing and molding means for advancing the slide fastener stringers along a longitudinal path;
(d) roller means disposed in said longitudinal path between said severing and molding means for feeding the slide fastener stringers along said path; and
(e) means retractably disposed between said roller and molding means for positioning a slider in said longitudinal path before arrival thereat of one of the slide fastener stringers, for enabling said one stringer to be threaded through a slider during feeding of said one stringer by said roller means.

4,300,284
METHOD AND APPARATUS TO ORGANIZE AND TO ELECTRICALLY CONNECT WIRES
Larry R. Reeder, San Jose, Calif., assignor to Raychem Corporation, Menlo Park, Calif.
Filed Dec. 15, 1978, Ser. No. 969,927
Int. Cl.³ H01R *43/02*; B23P *19/00*
U.S. Cl. 29—860 **15 Claims**

1. A method for marking each of a plurality of wires and for electrically connecting both the first and second ends of each wire comprising the steps of:
(a) placing on such wires proximate to a first end thereof by sliding over the first or second ends of the wires an organizer comprising at least two discrete arrays of tubular, substantially parallel, heat-recoverable enclosed passageways, each passageway being defined by a wall, wherein each array is slideable along the plurality of wires and passageways of one array are aligned with corresponding passageways of another array, each array being detachably connected to another array, at least a portion of the passageways of at least one array containing a fusible solder insert, wherein each such wire is located in an aligned passageway of each array, each passageway containing no more than one wire;

(b) detaching a first array from the organizer;
(c) heat-recovering said passageway walls of the first array on the wires over the first ends thereof and fusing any such solder inserts for electrically connecting the first ends of such wires in a selected sequence;
(d) sliding the apparatus with the first array detached along the wires toward the second ends of the wires thereby organizing the second ends of the wires in a sequence corresponding to the selected sequence into which the first ends of the wires are electrically connected; and
(e) heat-recovering said passageway walls of the second array on the second wires over the second ends thereof and fusing any such solder inserts for electrically connecting the second ends of the wires in the corresponding sequence.

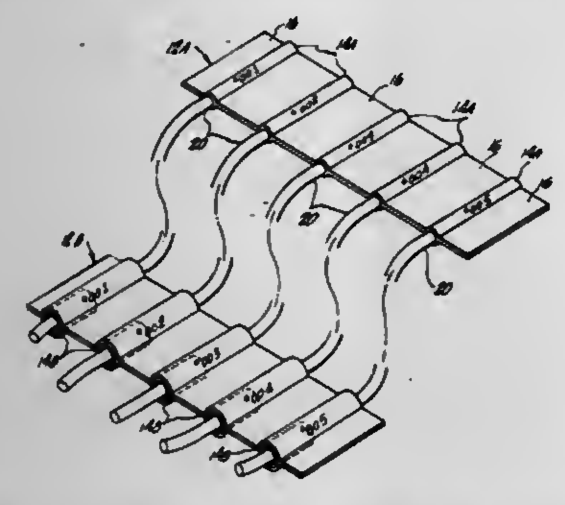

9. An apparatus for organizing and marking a plurality of elongated substrates, the apparatus comprising at least two discrete arrays of passageways, each passageway being defined by a wall, each array comprising a plurality of substantially parallel passageways and each array being slideable along a plurality of wires, wherein a passageway of one array is aligned with a corresponding passageway of another array and each array is detachably connected to at least one other array, the passageways being adapted for sliding onto the elongated substrates over the ends thereof, wherein said passageway walls comprise heat recoverable material.

4,300,285
SAFETY RAZOR WITH BLADE CLEANING MEANS
Saijiro Endo, Seki, Japan, assignor to Kai Cutlery Center Co., Ltd., Gifu, Japan
Filed Sep. 24, 1979, Ser. No. 78,373
Claims priority, application Japan, Feb. 19, 1979, 54/18955
Int. Cl.³ B26B *21/16*
U.S. Cl. 30—41 **11 Claims**

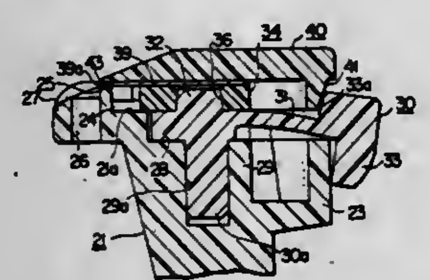

1. A safety razor comprising, a platform member including a first blade wiping portion, a handle joined to said platform member, cutting means supported on said platform member and including a blade member having a longitudinal cutting edge, said cutting means being relatively movable with respect to said platform member to move said longitudinal cutting edge from a protracted shaving position to a retracted non-shaving position, and vice versa, said cutting means being supported on said platform member such that said blade member is in contact with said first wiping portion in the vicinity of said longitudinal cutting edge during movement of said cutting means, a cover member disposed over said cutting means to permit exposure of the longitudinal cutting edge of said blade member while otherwise confining said cutting means between said platform member and said cover member, said cover member including means for connecting said cover member to said platform member, and means for moving said cutting means and said longitudinal cutting edge from said protracted position wherein the longitudinal cutting edge is extended from between the cover member and the platform member for use during shaving, to said retracted position wherein the longitudinal cutting edge is not extended for shaving use, thereby enabling said first wiping portion to wipe said blade surface in the vicinity of said longitudinal cutting edge for removal of shaven material and wherein said longitudinal cutting edge is entirely disposed between said first blade wiping portion and said cover member so as to render said longitudinal cutting edge incapable of cutting when said moving means moves said longitudinal cutting edge to said retracted position.

4,300,286
CORING MACHINE FOR FRANKFURTERS AND THE LIKE
George Panchula, 501 Foster Park Rd., Lorain, Ohio 44053
Filed Sep. 15, 1980, Ser. No. 186,857
Int. Cl.³ A47J *25/00*
U.S. Cl. 30—113.3 **3 Claims**

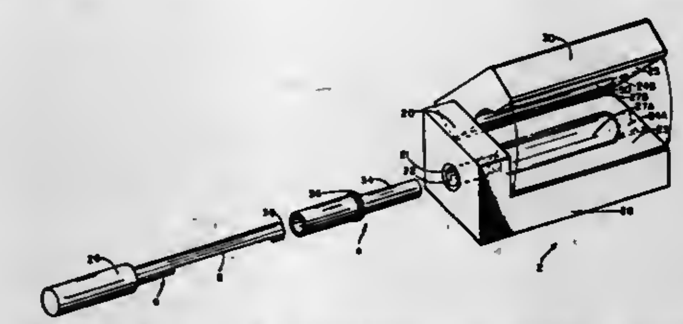

1. Apparatus for coring frankfurters and the like, comprising:
(a) a first member having an opening inscribed thereon, said opening being of the length and shape of a frankfurter cut along it's axis, and
(b) a second member having an opening inscribed thereon, being the mirror image of said opening on said first member, and positioned such that when said first and second members are placed upon each other, said openings form a mold of the shape and size of a frankfurter, and an aperture formed through one end of said first member, and in axial alignment with the mold formed by said first and second members, and
(c) a guide tube member adapted to be received by said aperture, and
(d) a cylindrical elongated coring member for insertion into said guide tube, said aperture and into a frankfurter retained by said mold formed by the first and second members, for coring and removing material from said frankfurter.

4,300,287
CUTTING TOOL
Larry T. Tibbs, 1827 E. Lincoln Hwy., DeKalb, Ill. 60115
Filed Sep. 8, 1980, Ser. No. 185,328
Int. Cl.³ B26B *29/00*
U.S. Cl. 30—289 **3 Claims**

1. A tool for use in removing the outer sheet metal skin of an automobile door by cutting through the outer skin where it is reversely folded over the edge of the door, said tool including:
an elongated body having a front end and a rear end,
a shank at the rear end of the elongated body for connection

to a reciprocating hammer, and a cutting portion at the front end of the elongated body,
said cutting portion of said tool including a flattened area extending from the front end of the body, a pair of stubs located at the front end of the body and on the flattened area side of the body, said stubs extending substantially at right angles to the flattened area of the body and being spaced apart to straddle the outer edge of an automobile door to guide the tool during cutting,
a cutting tooth formed on the flattened area of said cutting portion of the tool and aligned between said stubs,

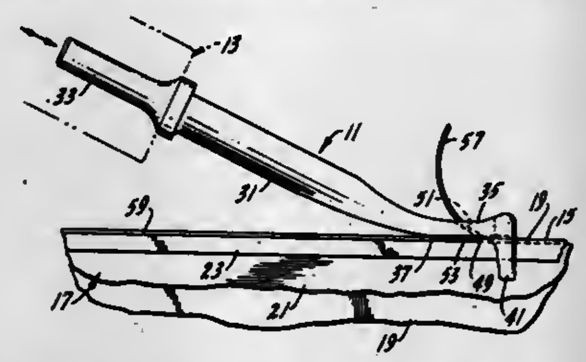

said cutting tooth projecting below said flattened area a distance substantially equal to the thickness of the sheet metal forming the outer skin of said automobile door,
a slot formed adjacent said cutting tooth and extending through said body to permit passage of scrap cut from the sheet metal skin, and
a guide surface formed between the stubs and located forward of the cutting tooth to align the cutting tooth to prevent the cutting tooth from cutting into the edge of the automobile door a distance substantially greater than the thickness of the sheet metal forming the outer skin of the automobile door.

4,300,288
CAN OPENER
Ayzik Blyakharov, 31-41 23 St., Astoria, N.Y. 11106, and Joseph S. Kagantsev, 35-33 83 St., Jackson Heights, N.Y. 11372
Filed Dec. 17, 1980, Ser. No. 217,250
Int. Cl.³ B27B *7/30*
U.S. Cl. 30—409 **7 Claims**

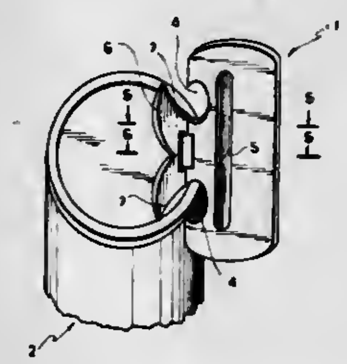

1. A can opener, comprising
a first substantially flat member extending in a first direction and having two lateral sides spaced from one another in a second direction transverse to said first direction, said first member having two slots arranged and open at one of said lateral sides so that each slot can surround a bead of a can;
a second substantially flat member also extending in said first direction and also having two lateral sides spaced from one another in transverse direction, said second member having two cutting edges each arranged in the region of a respective one of said slots and extending between the lateral sides of said second member, said cutting edges facing away from one another so that they can be used alternately by a left-handed person and a right-handed person, said members being separate members and connected with one another along one of the lateral sides of each of said members movable between an operative position in which said members are unfolded and extend transversely to one another, and an inoperative position in which said members are folded and extend substantially parallel to one another, said members being dimensioned so that said second member has an outer contour which is located within the outer contour of said first member completely, when said members are in said inoperative position; and
means for movably connecting said members with one another and arranged between said cutting edges, as considered in said first direction.

4,300,289
HOOK FOR A MEASURING TAPE
Robert J. DeHaven, 310 N. Darlington St., West Chester, Pa. 19380
Filed May 27, 1980, Ser. No. 153,273
Int. Cl.³ G01B *3/10*
U.S. Cl. 33—137 R **10 Claims**

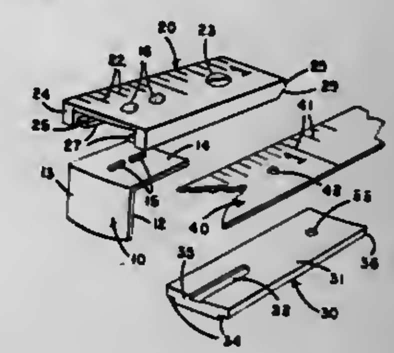

1. A hook end for a graduated measuring tape having a free end which comprises
a hook having a projecting portion with parallel inner and outer faces and a base portion substantially perpendicular to the projecting portion;
a measuring plate having a top, a bottom, and parallel leading and trailing edges, the top of said measuring plate carrying graduations of the distance along its length from the leading edge to the trailing edge, the base portion of said hook slidably connected to said measuring plate, with the projecting portion depending beneath the bottom, for longitudinal movement relative to said measuring plate between a retracted position wherein the outer face of the projecting portion is aligned with the leading edge, and an extended position wherein the inner face of the projecting portion is aligned with the leading edge;
together with means for attaching said measuring plate to the free end of a graduated measuring tape with the graduations on the top of said measuring plate overlapping and coinciding with the corresponding graduations on said measuring tape.

4,300,290
VERTICAL SIGHT ADJUSTER
Leon Zalewski, 4 Pleasant St., P.O. Box 119, Warehouse Point, Conn. 06088
Continuation-in-part of Ser. No. 1,521, Jan. 9, 1979, abandoned. This application Apr. 29, 1980, Ser. No. 144,957
Int. Cl.³ G01C *15/10*
U.S. Cl. 33—392 **3 Claims**

1. A device for checking the verticality of a wall or the like, and comprising a plumb-bob having a generally frusto-conical configuration and defining an axial opening extending through the plumb-bob from its upper end to the lower end thereof, a plumb line received in said opening and knotted plate with a central hole for slidably receiving said plumb line, said plate having at least one pair of opposite sides which are parallel and each of which plate sides are slightly longer than the maximum outside diameter of said plumb-bob whereby said plate can be held with one of it's sides against the wall and with the plumb-

bob hung therefrom so that the plate can be pivotally moved out of the horizontal to check for clearance between the plumb-bob and the wall, said plumb-bob diameter and said

plate side length being so related that the plumb-bob will just touch a vertical wall when the plate is held at an angle in the range between 30–45 degrees relative to the horizontal.

4,300,291
METHODS AND APPARATUS FOR HEATING PARTICULATE MATERIAL
Harold Heard, and Charles R. Wilt, both of Pittsburgh, Pa., assignors to Salem Corporation, Pittsburgh, Pa.
Continuation-in-part of Ser. No. 20,168, Mar. 13, 1979, Pat. No. 4,236,318. This application Mar. 17, 1980, Ser. No. 131,057
Int. Cl.³ F26B *3/08, 17/00;* **F27B** *15/00*
U.S. Cl. 34—10 **10 Claims**

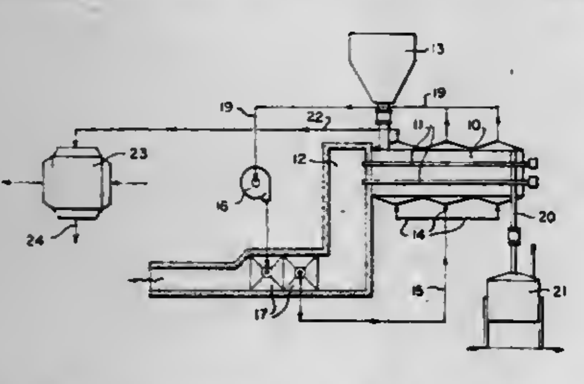

1. The method of heating and drying a particulate material comprising the steps of:
(a) delivering a particulate material to be heated to one end of an elongate horizontally extending fluidizing and heating chamber whose length is substantially greater than its height;
(b) fluidizing and heating said particulate material with an upwardly flowing stream of oxygen-free gas separately introduced into said chamber at spaced areas along its length, transverse to the length of said fluidizing chamber at a temperature sufficient to raise the temperature of the particulate material to a preselected level for drying and at a flow rate sufficient to fluidize and/or transport the particulate material;
(c) heating said gas and particulate material in said fluidizing and heating chamber by radiant heating means extending the length of said chamber intermediate the top and bottom on opposite sides of the longitudinal center line in the path of said fluidized particulate material to maintain the desired temperature level;
(d) removing said heated and dried particulate material from the fluidized bed or transport stream at the other end of said chamber;
(e) removing gases substantially equivalent to the amount of gases formed from the drying of the particulate material; and
(f) recycling said oxygen-free gas into said fluidizing chamber whereby particulate material is continuously fluidized, heated and transported out of said fluidized bed.

4,300,292
HEATED MILL DRIVE SYSTEM
Robert M. Vadas, Dorval, and Marvin B. Shaver, Beaconsfield, both of Canada, assignors to Dominion Engineering Works Limited, Lachine, Canada
Filed Feb. 7, 1980, Ser. No. 119,361
Claims priority, application Canada, Feb. 16, 1979, 321825
Int. Cl.³ F26B *11/04*
U.S. Cl. 34—108 **6 Claims**

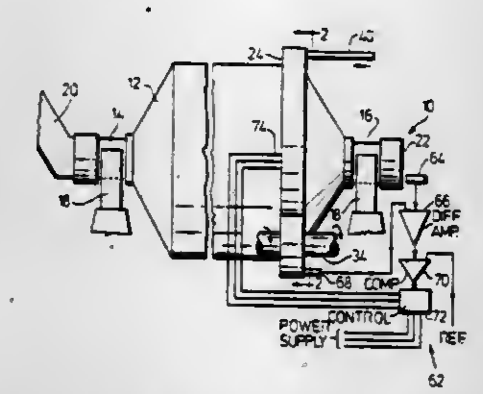

1. In a rotatable mill apparatus having a heated drum rotatably mounted for rotation about the polar axis of the drum, including a large gear wheel for driving the drum and physically attached to the outer circumference of the drum in torque transmitting relation therewith, the improvement comprising gear guard means including heat insulation means extending about the gear in substantially shrouding relation therewith having seal means to limit air transfer therepast and heating means for heating the gear wheel and the interior of the gear guard.

4,300,293
BELT TENSIONING ASSEMBLY FOR A CLOTHES DRYER
Victor Gladysz, Verdun, Canada, assignor to Canadian Appliance Manufacturing Company Limited, Weston, Canada
Filed Mar. 28, 1980, Ser. No. 135,135
Claims priority, application Canada, Jun. 1, 1979, 328977
Int. Cl.³ F26B *25/02*
U.S. Cl. 34—108 **10 Claims**

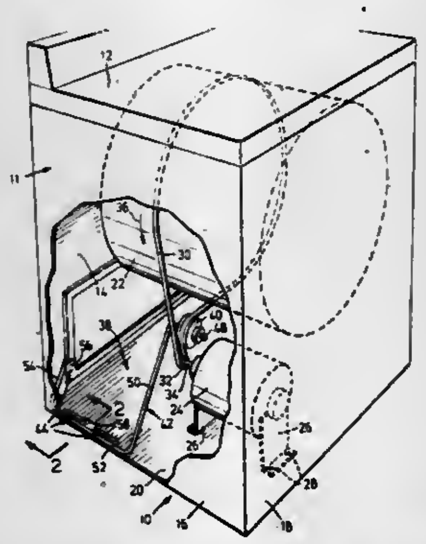

1. In a clothes dryer employing a belt tensioning assembly

for positioning a drive belt in tensioned relation about a rotatable drum and a drive pulley mounted within the housing of the dryer, said belt tensioning assembly comprising:
an idler pulley operable in guiding and tensioning relation with said belt;
a resilient mounting bar including a cantilevered positioning arm member onto which said idler pulley is rotatably mounted, a moment arm member connecting one end of said positioning member to one end of a torsion arm member, said moment arm member being connected in torque imposing relation with said torsion arm member, and a cantilevered anchor member inclined from said torsion member at an end opposite the one end of the torsion member in torque restraining relation thereto;
anchor means securing said torsion member and said anchor member in positioned load transfer relation with said housing to locate said positioning member in predetermined spaced relation to the main axis of said drive pulley, for mounting said idler pulley thereon, whereby upon displacement of said idler pulley towards said drive pulley to receive said belt in tensioned supported relation over said idler pulley, said idler pulley is substantially positioned in mutually aligned and parallel relation with said drive pulley; and
said mounting bar is pre-stressed to maintain said belt in aligned tensioned relation about said pulleys.

4,300,294
ARTICLE OF FOOTWEAR
George C. Riecken, 1400 Washington Ave., Evansville, Ind. 47714
Filed Oct. 9, 1979, Ser. No. 82,709
Int. Cl.³ A43B *3/26, 3/24, 3/12*
U.S. Cl. 36—97 **17 Claims**

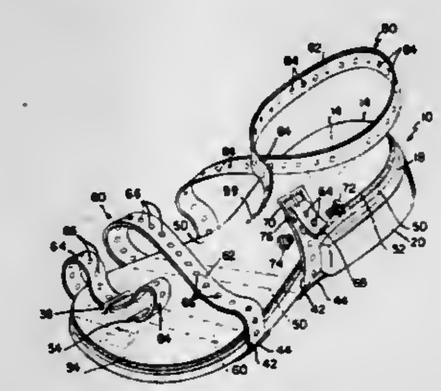

1. An article of footwear being in the form of a sandal comprising a sole; a heel provided on the sole; an arch-engaging loop, an ankle-encircling loop and at most one toe-receiving loop for adjustably securing the sole to a wearer's foot and for adjustably receiving at most one toe of the wearer's foot; the arch-engaging and toe-receiving loop being formed by a first strap having one end anchored adjacent to one lateral side of the sole; the ankle-encircling loop being formed by a second strap having one end anchored adjacent to the same lateral side of the sole as the first strap; and means for adjustably connecting the first strap to the second strap to secure the sole to the wearer's foot and to apply a corrective force to the one toe of the wearer's foot; the connecting means being carried by the first strap adjacent to another opposite lateral side of the sole.

4,300,295
SNOW THROWER IMPELLER ASSEMBLY
Richard A. Heismann, Knoxville, Ill., assignor to Outboard Marine Corporation, Waukegan, Ill.
Filed Jan. 14, 1980, Ser. No. 111,821
Int. Cl.³ E01H *5/00*
U.S. Cl. 37—43 D **13 Claims**

1. A snow thrower comprising a housing supported on ground engaging wheels and having a transversely extending discharge chute, an impeller mounted on said housing below said discharge chute for rotation about a transverse axis and an elongated axially extending blade having a length substantially coextensive with a width of said discharge chute and a radially outwardly extending propelling section, said propelling section being in the form of a continuous series of corrugations

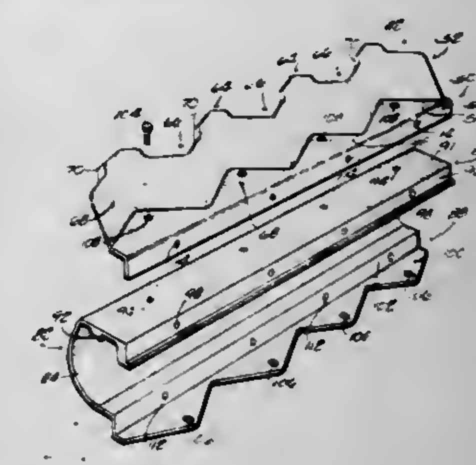

with alternating ridges and furrows defining a plurality of generally V-shaped pockets into which snow is compacted and from which snow is propelled toward said discharge chute during rotation of said impeller, and a power source for rotating said impeller.

4,300,296
IRONING PRESS
Walter P. Hochstrasser, Bernex, and Georges Schumacher, Vernier, both of Switzerland, assignors to Mefina S.A., Fribourg, Switzerland
Filed Mar. 20, 1980, Ser. No. 132,186
Claims priority, application Switzerland, Apr. 11, 1979, 3457/79
Int. Cl.³ D06F *71/00, 71/08*
U.S. Cl. 38—17 **6 Claims**

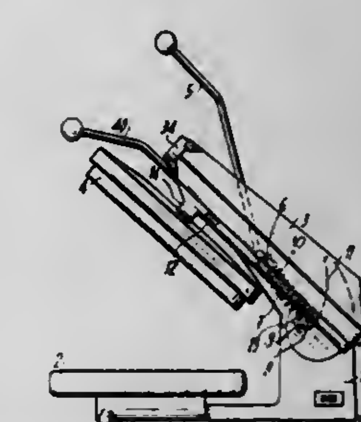

1. An ironing press comprising a support for a working surface, an arm pivotally secured to the support about a horizontal axis, a pressing head or heating plate pivotally suspended from the arm and a lever pivotally secured to the arm at a point remote from the said horizontal axis, in which pivoted suspension means connecting the heating plate with the arm permits the plate to oscillate against the action of the return means along an axis perpendicular to the horizontal axis of the arm and also about an axis parallel to the horizontal axis of the arm; said return means comprising two sliders mounted in two bores provided in the arm substantially at right angles with respect to the pivotal axis of the arm with the support, characterized in that the end of each of the sliders adapted to be connected to the heating plate has a hole by which it is engaged on a stirrup, the arms of which stirrup are solid with the heating plate.

4,300,297
TICKET
James E. Betterley, Huntingdon Valley, Pa., assignor to Globe Ticket Company, Horsham, Pa.
Filed Feb. 25, 1977, Ser. No. 771,908
Int. Cl.³ G09F *3/04*
U.S. Cl. 40—20 R **1 Claim**

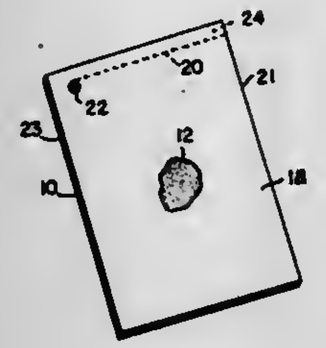

1. A self-wicketing ticket comprising:
a tag, one surface of which is coated with a pressure sensitive adhesive,
a backing covering said pressure sensitive adhesive and adapted to be separated from said tag to expose said pressure sensitive adhesive,
means on said tag for providing a wicket for said ticket,
said wicket providing means comprising a strip portion of said tag,
said strip portion being formed by a slit in the tag spaced from and extending along an edge of said tag, and a hole formed in said tag, said slit extending from an edge of said tag to said hole.

4,300,298
APPARATUS FOR THE PRODUCTION AND DISPLAY OF MOVING PICTURES
Kurt Ehrat, Grebweg 17, 8162 Steinmaur, Switzerland
Filed Aug. 15, 1978, Ser. No. 933,678
Claims priority, application Switzerland, Aug. 19, 1977, 10191
Int. Cl.³ G09F *19/00*
U.S. Cl. 40—430 **38 Claims**

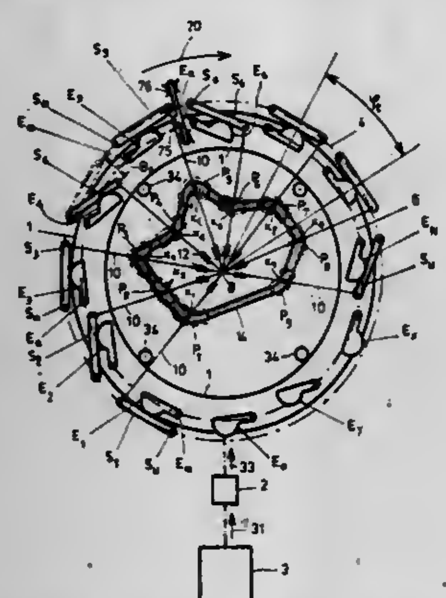

1. Apparatus for generating and displaying moving pictures comprising:
a movable control element carrier;
a plurality of control elements arranged on said carrier and constituting mechanical information storages, said information storages comprises a total of at least two mechanical states representing the information stored;
a plurality of outer final control elements, each of said final control elements having two positions and being movable therebetween;
a plurality of variable and position selectable picture elements, each of said picture elements being associated with a respective one of said plurality of final control elements;
mechanical connecting means connecting each said picture element with its said associated final control element;
said positions of said final control elements being variable and responsive to the mechanical states of said control elements, said final control elements being adapted for mechanical association with said control elements for transferring information from said control elements to said final control elements;
said final control elements positively controlling said picture elements by transferring said information to said picture elements through said mechanical connection means; and,
means to vary the position of said movable control element carrier, and the mechanical states of said control elements of the varying positions of said movable control element carrier to vary the information transferred to said picture elements and thereby generating variable and different pictures in accordance with the position of said control element carrier and the information contained in the mechanical storage means of said plurality of control elements.

4,300,299
DISPLAY UNIT
Lester Batky; Michael P. Batky, both of Brooklyn, and Jack Manne, New York, all of N.Y., assignors to Almac Plastics, Ridgewood, N.Y.
Filed May 1, 1980, Ser. No. 145,862
Int. Cl.³ G09F *15/00*
U.S. Cl. 40—607 **11 Claims**

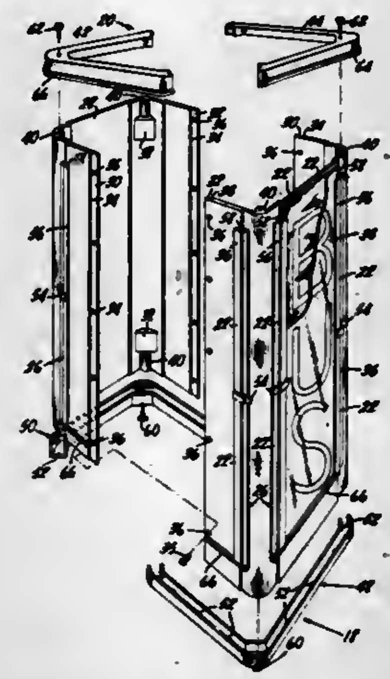

1. A display assembly comprising:
(a) a pair of separable panels, each panel having sides thereon wherein each panel has a substantially U-shaped cross section;
(b) means for holding said separable panels in engaging abutment, the abutment being along the end portions of the sides of said separable panels, said engaging abutment forming thereby a tube of substantially rectangular cross-section adapted for encompassing an interior pole;
(c) means for mounting a transparent cover sheet on at least one exterior side of said tube, said transparent cover sheet being held spaced from said tube, the space allowing a display sheet to be received therebetween;
(d) a bottom cap for mounting at the bottom of said tube, said bottom cap comprising two L-shaped bottom members adapted for abutment at each end thereof for forming a substantially continuous bottom cap on the bottom periphery of said tube;
(e) a top cap for mounting on the top of said tube, said top cap comprising two L-shaped top members adapted for abutment at each end thereof to form a substantially continuous top cap on the top periphery of said tube; and
(f) said top cap and said bottom cap preventing access to the space between said transparent cover and said tube.

4,300,300
DISPLAY BOARDS
Erich Neuland, and Rudolf L. Neuland, both of 3 Michael Seiler Strasse, Kunzell, Fed. Rep. of Germany 6411
Filed Jan. 4, 1980, Ser. No. 109,530
Claims priority, application Fed. Rep. of Germany, Feb. 9, 1979, 2904871
Int. Cl.³ G09F *15/00*
U.S. Cl. 40—610 **9 Claims**

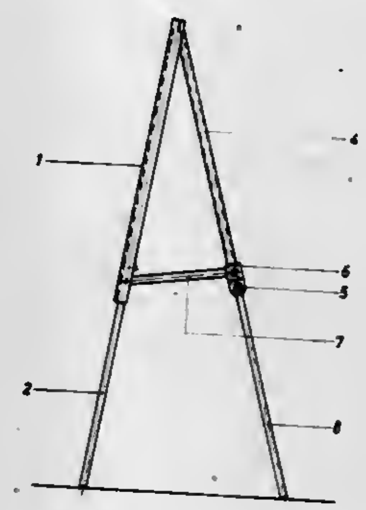

1. An easel comprising:
a. a top;
b. a pair of side frame members fixed at one end of the top, each side frame member defining an enclosed channel and having a longitudinally directed slot;
c. a pair of legs telescopically mounted in said channels;
d. an elongated support member pivotally mounted at one end to the top at a location intermediate the side frame members;
e. a sleeve member slidingly mounted on said support member; and
f. a pair of struts pivotally mounted at one end to said sleeve member and at the other end to the upper end portion of a respective one of said legs through said slot.

4,300,301
ROTARY ACTION FIREARM SAFETY ASSEMBLY OPERABLE WITH FINGER ON THE TRIGGER
Donald C. Morrison, 60 Connellsville St., Dunbar, Pa. 15431
Filed May 16, 1979, Ser. No. 39,450
Int. Cl.³ F41C *17/02*
U.S. Cl. 42—70 E **5 Claims**

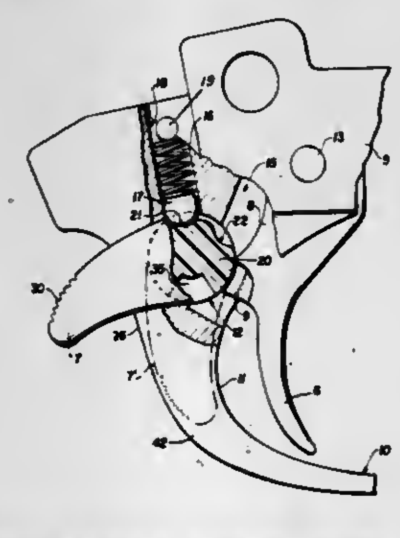

1. In a firearm having a firing mechanism and a pivoted trigger lever carrying a finger rest located inside an encompassing trigger guard cage with a rearmost stop member adjacent the trigger finger rest rearmost pivoted position taken to release the firing mechanism, the improvement comprising a safety assembly operable to impede the pivotal movement of the trigger lever, said firearm having a cylindrical bore extending laterally therethrough to opposite surfaces at a position to the rear and adjacent said stop member, a trigger lever extension finger pivoted with the trigger lever to extend inside said bore only when the trigger lever is at the rearmost position for releasing the firing mechanism, said safety assembly comprising in combination, a rotatable generally cylindrical barrel member fittable into said bore for rotation therein and having affixed to the barrel member for rotation therewith and extending from one axial extremity thereof a rotatable safety lever arm adapted to rest on one surface of the firearm adjacent to and outside of said bore when the barrel member is inserted within the bore for manual actuation of the firearm user, frictional structure on the extremity of said lever arm for engagement by a finger of the firearm user to rotate said barrel member when within said bore over a predetermined arc and disposed in a first safety position in a direction rearwardly of said trigger lever, receptacle means in said barrel member disposed to mate with and receive said trigger lever extension finger in the trigger lever rearmost pivoted position at only a safety released position of rotation of said barrel member in said bore and structure on said barrel member preventing said trigger lever extension finger from entering said bore in the safety position of rotation of said barrel member, a detent mechanism engaging said barrel member to hold it selectively respectively in said safety position and safety released position within said arc of rotation provided by said lever arm, and means mounting said barrel member in said bore with said safety lever arm adjacent one firearm surface at said bore on one side of the firearm for solely rotary movement induced by movement of said safety lever arm to move in the two detented positions providing thereby respectively extending rearwardly from the trigger guard cage in the safety position where the firing mechanism cannot be released and extending adjacent alongside the trigger guard cage the safety release position where the trigger lever can release the firing mechanism upon appropriate manipulation of said rotatable lever arm while the trigger finger of the user is being held adjacent to the trigger lever.

4,300,302
RETAINING AND ADJUSTING DEVICE FOR THE PISTOL GRIP OF A FIRE ARM
Dieter Anschütz, and Dieter Straub, both of Ulm, Fed. Rep. of Germany, assignors to J. G. Anschütz GmbH, Ulm, Fed. Rep. of Germany
Filed Jul. 16, 1979, Ser. No. 57,827
Claims priority, application Fed. Rep. of Germany, Jul. 20, 1978, 2832015
Int. Cl.³ F41C *23/00*
U.S. Cl. 42—73 **21 Claims**

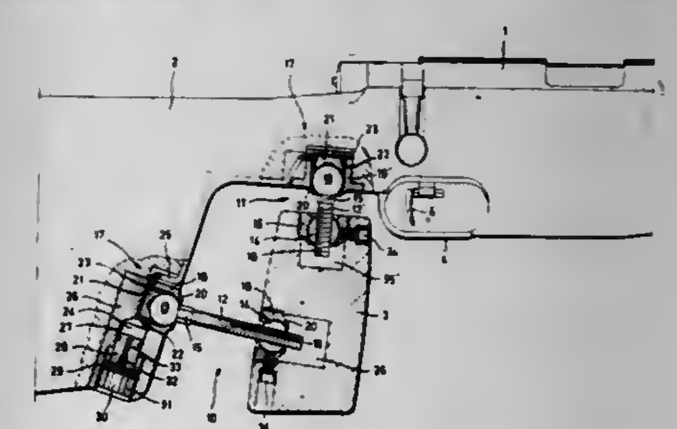

1. In a fire arm wherein a body member includes a stock portion and a pistol grip portion, the improvement comprising

at least one adjustable articulation mechanism interconnecting the pistol grip portion to the body member for universal and spaced adjustable movement relative thereto, and locking means for securing said mechanism in fixed position to retain said pistol grip portion in a preselected relationship with respect to said body member.

4,300,303
CANE FISHING POLE TIP
Duane Hatsoe, 1315 Country Club Prado, Coral Gables, Fla. 33134
Filed Jul. 25, 1980, Ser. No. 172,123
Int. Cl.³ A01K *87/00*
U.S. Cl. 43—24 **7 Claims**

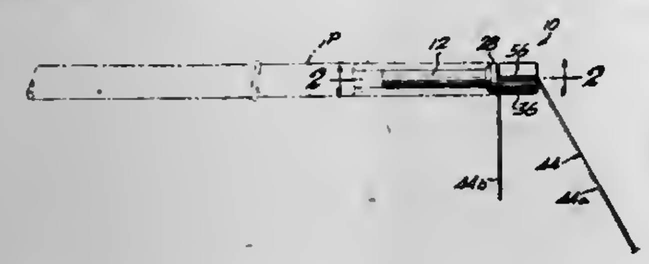

1. A fishing pole tip for attachment to a tip end of a pole such as a cane fishing pole, comprising:
a main shank portion, including a main tubular length for fixed engagement to the pole and a forward end portion;
a cap removably attached onto said forward end portion and including a through hole in a front wall thereof;
a passageway extending through said forward end portion in alignment with said through hole in a manner whereby a fishing line may be extended through said hole and passageway with respective portions thereof extending outwardly through said front wall hole and rearwardly outwardly of a rear end of said cap;
means to permit the fishing line to be freely slid forwardly or rearwardly through said hole and passageway with said cap loosely attached on said forward end portion and to lock the fishing line against sliding movement when said cap is tightened on said forward end.

4,300,304
DETACHABLE NIBBLER STICK
E. Frank Maycock, Omaha, and John L. Rayer, Valley, both of Nebr., assignors to Plastilite Corporation, Omaha, Nebr.
Filed Apr. 7, 1980, Ser. No. 137,880
Int. Cl.³ A01K *93/00*
U.S. Cl. 43—44.87 **3 Claims**

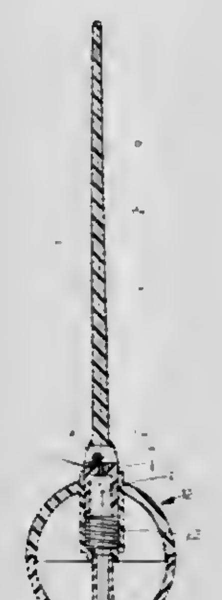

1. A detachable nibbler stick for attachment to a conventional push-button fishing float of a type having a spring-biased push-button held in place by an axial retaining member having retaining hooks at each end comprising a stem wherein the lower end of the stem is substantially flat and oriented transverse the longitudinal axis of the stem with an open channel running along a diameter of said lower end and a bridge crossing the channel adjacent to the center of said end so that the longitudinal axis of the stem will coincide with the axial member of the float when the stem is mounted.

4,300,305
ANIMAL TRAP
Lawrence King, General Delivery, Clarkleigh, Manitoba, Canada R0C 0R0
Filed Aug. 6, 1979, Ser. No. 64,484
Int. Cl.³ A01M *23/24*
U.S. Cl. 43—81 **6 Claims**

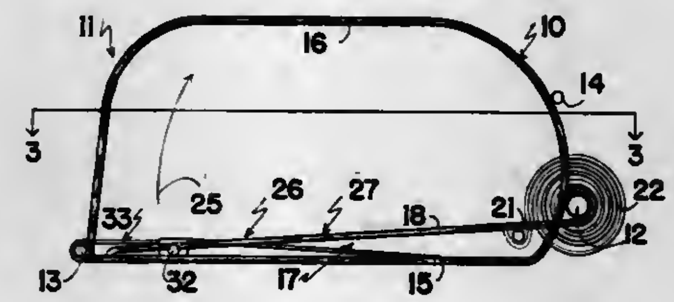

1. An animal trap which includes a frame having a pair of substantially vertical side portions in spaced and parallel relationship, means adjacent the base of said side portions maintaining same in said spaced and parallel relationship, a movable trap bar component pivoted by one end thereof between and adjacent to the lower sides of one end of said frame and pivotable from a substantially horizontal set position to a substantially vertical release position and vice versa, spring means normally urging said trap bar component to the release position, means extending between the side portions at said one end thereof against which said trap bar component engages when in the released position, a trigger assembly in said frame towards the other end of said frame, detachably engageable with said trap bar component, for detachably holding said trap bar component in the set position, and means to vary the sensitivity of the engagement of the trigger assembly with said trap bar component within limits, said trap bar including a pair of spaced apart substantially parallel side members, a cross bar extending between the ends of said members at the other end of said trap bar component, said trigger assembly including a trigger plate pivoted by one end thereof between said side frame portions and lying between said side members of said trap bar component when in the set position, a trigger pivoted by one end thereof to said frame and between said side frame portions thereof, at the other end of said side portions and overlying said cross bar of said trap bar component when said trap is in the set position, the distal end of said trigger detachably engaging under said one end of said trigger plate when in the set position, the tension of said spring means detachably maintaining said distal end of said trigger in engagement with said trigger plate, whereby depression of said trigger plate disengages same from said trigger and thereby releases said trap bar component from the set position to the released position, said means to vary the sensitivity of the engagement of the trigger assembly with said trap bar component within limits including an adjustable leverage link pivoted by one end thereof to the base of one of said side portions and engaging over one side of said trap bar component and under said trigger and being movable lengthwise along said base, within limits, thereby varying the leverage between said trap bar component and said trigger.

4,300,306
ELECTRICAL SCREEN
Richard H. Hudgin, 56 Framingham Rd., Marlboro, Mass. 02173
Filed Dec. 7, 1979, Ser. No. 101,268
Int. Cl.³ A01M *1/22*
U.S. Cl. 43—112 **6 Claims**

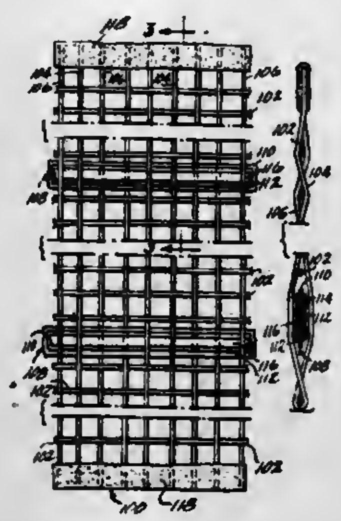

1. An electrical screen for killing pests comprising:
a set of warp strands of an electrically insulating material;
a first set of weft strands of an electrically insulating material, woven between said warp strands;
a second set of weft strands of an electrically conducting material woven between said warp strands, each strand of said second set being separated from an adjacent strand of said second set by at least one strand of said first set; and
means for applying an electrical potential between each strand of said second set and the adjacent strand of said second set.

4,300,307
ANIMATED TOY
Patricia A. Biasuzzi, Pole #120, Cooper Rd., Harmony, R.I. 02829, and George W. Ptaszek, P.O. Box 260, Pascoag, R.I. 02859
Filed Jul. 17, 1980, Ser. No. 169,739
Int. Cl.³ A63H *3/14*
U.S. Cl. 46—154 **4 Claims**

1. An animated toy having a body member filled with a soft packing, a filled head extending from one end of the body member, a pair of unfilled arm-like appendages attached to the body portion to represent arms, a pair of filled leg-like appendages extending from the end of the body portion opposite the head, each of said arm-like appendages comprising flexible fabric and each having a pocket formed by two layers of fabric that encompasses a portion only of the appendage at the terminal end thereof the entrance to said pocket being located inwardly of said end and adapted to receive a user's hand that may be inserted therein, said leg appendages each having a loop at the terminus thereof to receive a hand of a user, said body, head and legs being filled with a solid material, sufficiently dense to be stiff enough to stand erect while the user's hand is manipulating the toy.

4,300,308
TOY VEHICLE CAPABLE OF TRAVELING ON BOTH ITS TOP AND BOTTOM SURFACES
Masaki Ikeda, Tokyo, Japan, assignor to Tomy Kogyo Co., Inc., Tokyo, Japan
Filed Apr. 23, 1980, Ser. No. 143,092
Claims priority, application Japan, Jan. 15, 1979, 54-82416[U]
Int. Cl.³ A63H *17/00, 17/40, 11/10*
U.S. Cl. 46—206 **7 Claims**

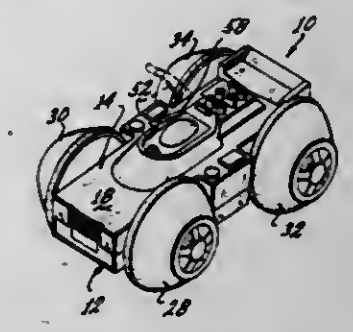

1. A mechanism for lifting at least a portion of a toy off of a surface on which the toy rests, said toy of the type having an outside housing, which comprises:
a motor located in said toy housing and capable of producing a rotary output;
a rotary member located in said housing and operatively connected to said motor and rotating in response to said rotary output of said motor;
a curved wall formed on said rotary member, said curved wall having a convex surface and including an opening between the ends of said curved wall, said wall and said opening rotating as said rotary member rotates;
at least one furcated member movably mounted in said housing and positioned in said housing in a location allowing in a first instance a first portion of said furcated member to be extended away from said housing when a second portion of said furcated member is located within said opening between the ends of said wall and in a second instance said first portion of said furcated member to be retracted towards said housing when said second portion of said furcated member is located adjacent to said convex surface of said wall;
biasing means operatively associated with said furcated member biasing said furcated member to said position wherein said first portion of said furcated member is extended away from said housing, said second of said furcated member when located adjacent to said convex surface of said wall retaining said first portion of said furcated member towards said housing against the force of said biasing means and said second portion of said furcated member when located within said opening between the ends of said wall allowing said first portion of said furcated member to be extended away from said housing under the bias of said biasing means;
said first portion of said furcated member when extended away from said housing capable of lifting at least a portion of said toy off of said surface on which said toy rests.

4,300,309
PLANT FEEDING DEVICE
Katherine S. Mincy, 5705 High Point Rd., Greensboro, N.C. 27407
Filed Mar. 5, 1980, Ser. No. 127,435
Int. Cl.³ A01G *29/00*
U.S. Cl. 47—48.5 **2 Claims**

1. A plant watering device comprising; a reservoir for placement on the soil proximate to a plant, said reservoir being replaceable and frictionally engageable with a pointed, cylindrical soil penetrating member, said penetrating member constructed of an outer porous material and having a center sleeve, said center sleeve formed of a liquid impervious material and having a longitudinal opening along its entire length, said

penetrating member and said reservoir being interconnected by a joint which allows pivoting of the reservoir obliquely relative to said soil penetrating member whereby said penetrating member can be inserted into the soil at a desired angle to

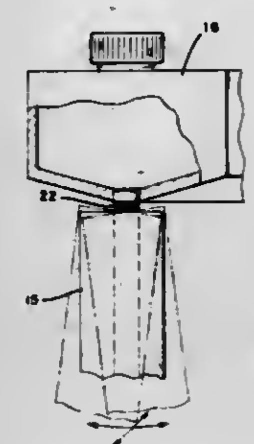

said reservoir and said reservoir can remain in a stationary position on the soil for allowing a controlled flow of liquid to pass from said reservoir through the longitudinal opening of the center sleeve and through the outer porous material and into the soil.

4,300,310
IDENTIFICATION AND SORTING OF PLANT HETEROKARYONS

David W. Galbraith, Lincoln, Nebr., assignor to The Board of Regents of the University of Nebraska, Lincoln, Nebr.
Filed Jul. 28, 1980, Ser. No. 172,979
Int. Cl.³ A01H *1/02*
U.S. Cl. 47—58 17 Claims

1. A method of parasexual hybridization of plants comprising the steps of:
   - removing the cell wall from and marking a first group of cells that are able to regenerate and are taken directly from intact plant organs to release marked protoplasts;
   - said step of removing the cell wall from cells and marking a first group of cells comprising the step of removing the cell wall from the cells and marking the protoplasts in steps which occur at least in part concurrently;
   - removing the cell wall from and marking a second group of cells that are able to regenerate to release marked protoplasts;
   - the step of removing the cell wall from and marking a second group of cells comprising the step of removing the cell wall from the cells and marking the protoplasts in steps that are performed at least in part concurrently;
   - fusing the marked protoplasts from said first group of cells with the marked protoplasts from said second group of cells; and
   - identifying heterokaryons from said markings.

4,300,311
HYDROPONIC IRRIGATION VALVE AND SYSTEM

Wayne Marchant, 800 E. 14th St., Oakland, Calif. 94606
Filed Jun. 5, 1980, Ser. No. 156,656
Int. Cl.³ A01G *31/00*
U.S. Cl. 47—62 10 Claims

1. A valve for use in a vessel to control the filling of the vessel with liquid to a predetermined level and the draining thereof, comprising:
   A. a lifting rod having
      i. a closure member fixed to a lower portion of said rod, and
      ii. intercepting means fixed to an upper portion of said rod;
   B. a valve chamber having
      i. a top wall with
         a. a first opening for passage of said liquid and
         b. a second opening with said lifting rod slidably extending therethrough, and
      ii. a side wall having an inlet port positioned below said top wall a distance greater than the thickness of the edge of said closure member; and

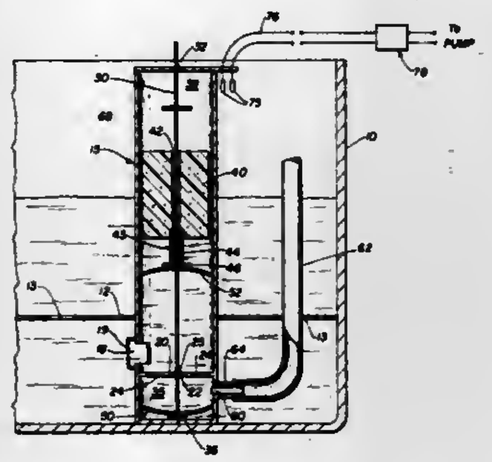

   C. a float positioned to move vertically above said top wall and adapted to engage said intercepting means at an upper position in the vertical movement of said float, said closure member being moveable into its uppermost position to seal said first opening, after said float has reached its uppermost position, by a lost-motion connection with said float.

4,300,312
FLOWER POT COVERING

Edwin H. Weder, and Donald E. Weder, both of 1111 Sixth St., Highland, Ill. 62249
Filed Nov. 15, 1979, Ser. No. 94,745
Int. Cl.³ A01G *9/02*
U.S. Cl. 47—72 2 Claims

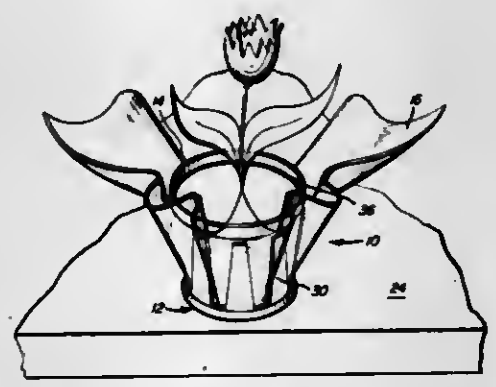

1. A structure for holding a substantially planar sheet of thin flexible film wrapped around a flower pot comprising cradle means for holding said sheet against the side of the pot being covered, said cradle means including a plurality of projections extending axially of the pot to be covered for holding the sheet directly against the pot at predetermined spaced positions along the periphery of the pot, said cradle means further including an imperforate base portion for covering and supporting the bottom of the pot, said base portion being larger in area than the bottom of the pot, said projections being attached to said base portion and spaced along the periphery thereof, said projections extending upwardly along the exterior of the pot over a major portion of its height for gripping a sheet placed between the pot and said cradle means and defining spaces between adjacent projections of sufficient width to permit the sheet to flare outwardly therein to produce a decorative convoluted effect.

4,300,313
LIFT-OUT GATE

Mark H. Steinke, North Aurora, Ill., assignor to Lyon Metal Products, Incorporated, Aurora, Ill.
Filed Dec. 13, 1979, Ser. No. 103,221
Int. Cl.³ E06B *3/32*
U.S. Cl. 49—463 10 Claims

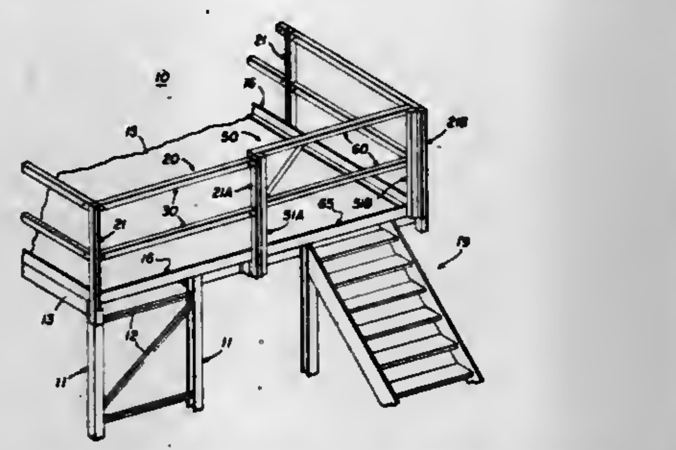

1. A removable gate construction for a railing or the like, said gate construction comprising a pair of spaced-apart vertical railing posts having opposing sides defining therebetween a gateway, two vertically-extending elongated guide members respectively adjacent to said opposing sides of said railing posts and projecting inwardly of said gateway toward each other, fastening means removably attaching said guide members respectively to said opposing sides of said railing post, a gate having two vertical end posts respectively carried at the opposite ends thereof and having an overall width slightly less than the distance between said opposing sides of said railing posts and substantially greater than the distance between the inner ends of said guide members, each of said gate end posts being a channel member having two spaced-apart wall portions defining a vertical slot therebetween, said vertical slot having a width slightly greater than the thickness of said guide members, each of said slots receiving therein in vertically-sliding relationship a corresponding one of said guide members for accommodating vertical sliding movement of said gate to and from a gateway-closing position.

4,300,314
THRESHOLD WITH MAGNETIC WEATHER STRIPPING

Sebastian Dittrich, Clifton, N.J., assignor to Magnetic Weather Stripping Corp., Clifton, N.J.
Filed Oct. 22, 1979, Ser. No. 87,021
Int. Cl.³ F06B *1/70*
U.S. Cl. 49—470 10 Claims

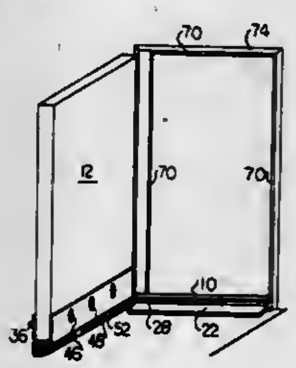

1. A threshold assembly for mounting on a door and a door sill comprising:
   a. a threshold plate formed of non-magnetically attracted material, said plate having a first stepped portion thereof with the substantially vertical face extending medially along the bottom edge of said door:
   b. said first stepped portion, in turn comprising:
      (1) a riser portion;
      (2) a stair portion extending from the lower edge of said portion inwardly toward and beyond the interior surface of said door;
      (3) a channel in the face of said riser portion;
      (4) a magnetically attracted strip mounted in said channel;
   c. a saddle portion extending from the upper edge of said riser portion outwardly beyond the exterior surface of said door;
   d. attachment means for attaching said threshold plate to said door sill;
   e. a second stepped portion on the bottom edge of said door having the lowermost portion thereof corresponding to said stair portion of said first stepped portion and the uppermost portion thereof corresponding to said saddle portion;
   f. magnet-mounting means for attachment to said lowermost portion of said second stepped portion, said magnet-mounting means, in turn comprising;
      (1) a slot extending substantially vertically adjacent said lowermost portion;
      (2) a guard plate extending substantially horizontally adjacent said stair portion;
   g. magnet holding assembly mountable to said magnet-mounting means, in turn comprising:
      (1) a T-shaped mounted flange for mounting within said slot thereof with the stem protruding therefrom.
      (2) an extensible bellows attached at one end to said stem permitting the horizontally extending movement of the magnet assembly when magnet attraction exists and the horizontally retracting movement of the magnet assembly when magnet attraction ceases;
      (3) a pocket with one side thereof attached at the other end of said extensible bellows; and,
      (4) a magnet strip mounted in said pocket.

4,300,315
VEHICLE PLASTIC DOOR CONSTRUCTION

Robert W. Holzwarth, Kalamazoo, Mich., assignor to The Model A and Model T Motor Car Reproduction Corp., Wixom, Mich.
Filed Sep. 28, 1979, Ser. No. 80,001
Int. Cl.³ E06B *3/00*
U.S. Cl. 49—501 1 Claim

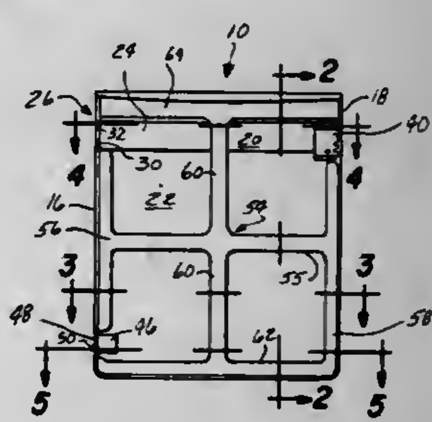

1. An automotive door construction comprising a rectangualr outer door panel formed of fiber reinforced plastic and haiving an in-turned flange about the perimeter thereof, an interior rectangular fiber reinforced plastic reinforcing grid fitted snugly within the peripheral flange and including horizontal upper, medial and lower sections, vertical edge sections and a vertical medial section, the grid sections each being "U"-shaped in cross-section and having their open ends contacting the inner surface of said panel, means securing said grid to the interior surface of said outer door panel, and a linear, horizontal, metallic beam of appreciable vertical extent secured to the panel inner surface intermediate the horizontal upper and medial sections of said reinforcing grid, said beam extending completely across said panel from a hinge support portion at one vertical edge of the panel to a latch support portion at the other end of said panel, the grid vertical sections

and the vertical edge portions of said in-turned flange being interrupted by said beam to accommodate the extension of said beam from one vertical extremity of said door panel to the other vertical extremity of said door panel.

4,300,316

SASH BALANCE FOOT SEAL MECHANISM

Nicholas Ficurilli, Rochester, N.Y., assignor to Schlegel Corporation, Rochester, N.Y.

Filed Oct. 17, 1979, Ser. No. 85,770

Int. Cl.[3] E05D *13/10*

U.S. Cl. 49—445 **8 Claims**

1. A sash balance foot seal mechanism for sealing the space between a window jamb and a side of a window sash slidably mounted on the jamb for reciprocal movement comprising:

a balance assembly interposed between said jamb and said sash, said balance assembly having a foot seal member engageable by the sash, and a spring connected to said foot seal member for biasing said foot seal member into sealing engagement with said sash, said foot seal member further being formed from a resilient material and shaped to seal the space between said jamb and said sash.

4,300,317

METHOD OF FITTING OPHTHALMIC LENSES IN SPECTACLES FRAMES

George T. Croft, Fiskdale, and Rato R. Buhler, Dudley, both of Mass., assignors to American Optical Corporation, Southbridge, Mass.

Filed Jan. 10, 1980, Ser. No. 111,052

Int. Cl.[3] B24B *1/00, 9/14*

U.S. Cl. 51—284 E **7 Claims**

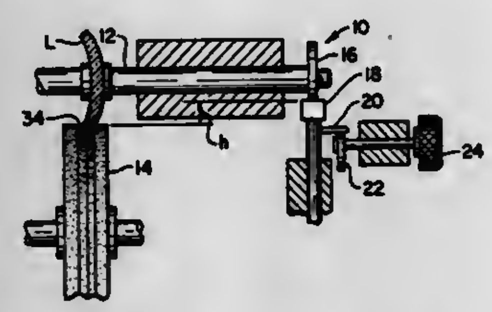

1. The method of fitting an ophthalmic lens in a rim of a spectacles frame comprising the steps of:

measuring the perimeter of the inner edge of a said rim;

selecting an edging machine pattern having a profile accurately corresponding to an intended final contour of said inner perimeter of said rim and operatively adapting said pattern to apparatus for edging said lens;

adjusting said apparatus according to the relative perimetric sizes of said pattern and said measured inner perimeter of said rim, said adjustment being such as to effect edging of said lens to said inner perimetric size of said rim by grinding operation of said apparatus when said lens is operatively clamped in said apparatus;

clamping said lens in said apparatus and effecting said grinding operating;

removing said lens from said apparatus; and

inserting said lens into said rim, causing said rim to assume the configuration of said edged lens profile.

4,300,318

CABINET FOR USE IN ABRASIVE BLASTING SYSTEM

Donald J. Brown, Naperville, Ill., assignor to Knox Manufacturing Co., Wood Dale, Ill.

Filed Jan. 28, 1980, Ser. No. 116,011

Int. Cl.[3] B24C *3/04, 9/00*

U.S. Cl. 51—425 **8 Claims**

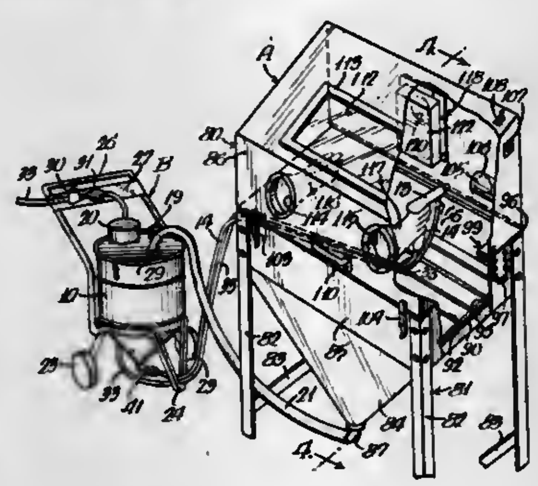

1. In an abrasive blasting system including an abrading device having a housing containing a supply of abrasive material and having an outlet at the bottom thereof, a source of vacuum connected to the housing and applying a negative pressure to the upper surface layer of said abrasive material, a gun for directing abrasive material in the direction of a surface area to be abraded and having a passageway therethrough, a source of positive pressure air connected to one end of said gun passageway, a first conduit connected to the housing above said abrasive material for returning abrasive material and abrading debris to the housing, a second conduit having a first end portion connected to the housing outlet and a second end portion connected to said gun passageway downstream of the connection of said source of positive pressure to said gun, and means for causing abrasive material to flow toward the gun in said second conduit, an abrading cabinet device in which an abrasive blasting operation is performed on articles to be abraded, comprising:

(1) a cabinet housing having

(a) a bottom,

(b) a peripheral sidewall, and

(c) a cover member to afford an enclosed inner blasting chamber, the cover member being movable to open the chamber for placing articles to be abraded in, and removing said articles from, the chamber;

(2) a base member for supporting the cabinet in upright position;

(3) a rack formed of spaced elements and supported in the chamber in spaced relation from the housing bottom, the spaced elements permitting spent abrasive and debris from a blasting operation to pass downwardly through said rack to the housing bottom;

(4) aperture means in the housing of a size to accommodate the source of positive pressure air and the second conduit so that each can be connected to the gun within the chamber;

(5) means for manipulating the gun from a position exteriorly of the cabinet housing;

(6) means for manipulating articles to be abraded within the chamber from a position exteriorly of the housing;

(7) a window of transparent material in the housing and positioned above the rack for viewing the inner blasting chamber;

(8) an exhaust outlet in the housing bottom below the rack, said exhaust outlet being adapted for connection with the first conduit to return spent abrasive and debris to the housing of the abrading device, the source of vacuum connected to the housing of the abrading device maintaining a negative pressure in the first conduit and in the chamber of the cabinet housing during a blasting operation;

(9) and means for providing the ingress of ambient air into the chamber of the cabinet housing at a position above the rack during a blasting operation to establish a continuing current of air flow downwardly through the rack and through the exhaust outlet in the housing bottom, the current of air continuously clearing the space in the chamber between the window and the rack of viewing-obscuring debris from the blasting operation by carrying said debris to the exhaust outlet.

4,300,319

BUILDING EAVES SHIELD

Paul E. Frost, Plainfield, and James R. Stewart, Indianapolis, both of Ind., assignors to New Stone, Inc., Indianapolis, Ind.

Filed Oct. 9, 1979, Ser. No. 82,950

Int. Cl.[3] E04D *13/00*

U.S. Cl. 52—11 **7 Claims**

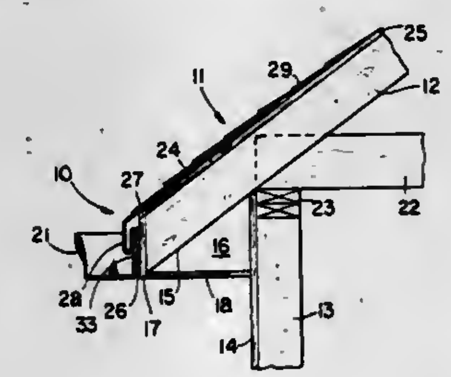

1. A building eaves construction, comprising in combination:

a. a plurality of supporting wall studs spaced apart and standing on end to form a wall frame;

b. a horizontal board plate nailed across the top of said studs;

c. an exterior wall siding attached to said stud frame;

d. a plurality of roof rafters attached to said board plate and extending outwardly beyond said exterior wall siding a distance forming an overhanging eaves area;

e. a vertical fascia board attached to said rafter ends forming the roof edge;

f. a building roof fastened to said rafters and having an exterior roof covering;

g. an eaves shield, comprising:

1. a first plate angled to match the pitch of a building roof underlying the exterior roof covering;

2. a second plate oriented to fit flush against the fascia board at the roof edge; and

3. a central, overlapping portion overlaying the roof edge and connecting said first and said second plates, said central portion forming a downwardly opening channel for securing a gutter therein and against the fascia board.

4,300,320

BRIDGE SECTION COMPOSITE AND METHOD OF FORMING SAME

Craig E. Rooney, Prairie Village, Kans., assignor to Havens Steel Company, Kansas City, Mo.

Filed Nov. 13, 1979, Ser. No. 93,395

Int. Cl.[3] E04H *14/00*

U.S. Cl. 52—173 R **10 Claims**

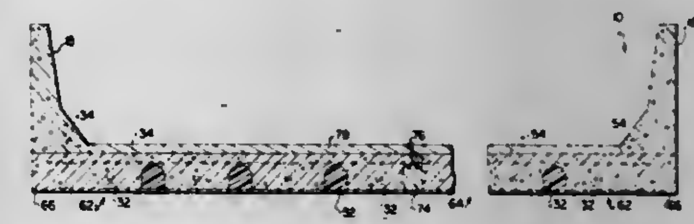

1. A bridge section of desired length and width, comprising:

a pair of separate, spaced apart bearing supports;

a composite deck spanning said bearing supports and being supported by the same, said deck including

a substantially planar structural metallic plate presenting generally flat, opposed upper and lower faces and having a thickness of at least about ½ inch, said plate being longer than it is wide, and having length and width dimensions substantially similar to that of said desired length and width;

a plurality of separate force-transmitting elements each including an upstanding portion and mechnical interlock structure at the upper end of the portion;

respective force-transmitting welds securing the lower ends of said upstanding portions to the upper face of said plate; and

a layer of concrete over said plate and having length and width dimensions substantially similar to those of said plate, at least a portion of said upstanding element portions and said interlock structures being embedded within said concrete layer,

said concrete layer being of a thickness such that the vertical distance from the upper ends of said elements to the upper surface of said concrete layer remote from said plate is greater than the vertical height of said elements,

said deck being self-supporting in span between said bearing supports.

4,300,321

COMPOSITE FIBRE MATERIAL ARTICLES WITH INLAYS AND A METHOD OF PRODUCING THEM

Lothar Preis, Bergisch Gladbach, and Dieter Jehle, Leverkusen, both of Fed. Rep. of Germany, assignors to Bayer Aktiengesellschaft, Leverkusen, Fed. Rep. of Germany

Filed Mar. 3, 1980, Ser. No. 126,763

Claims priority, application Fed. Rep. of Germany, Mar. 21, 1979, 2910984

Int. Cl.[3] D02G *3/00;* **E04C** *3/10, 3/30*

U.S. Cl. 52—223 R **10 Claims**

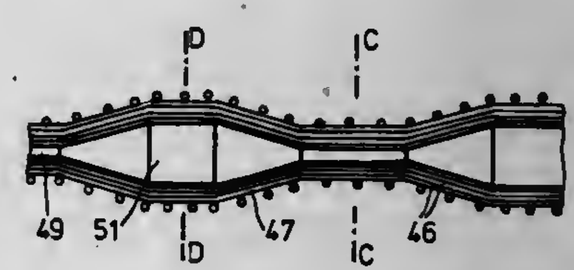

1. A composite fiber material rod comprising a matrix impregnated fiber bundle with predominantly unidirectional fiber orientation completely embedding a core with the fiber bundle closely pressed to the core, wherein the configuration of the cross-section of the core varies in the fiber direction and the

configuration of the cross section of the fiber bundle varies in the fiber direction in conformity with that of the core.

4,300,322
INSULATION
William H. Clark, 4284 E. State St., Sharon, Pa. 16146
Filed Mar. 28, 1980, Ser. No. 134,874
Int. Cl.³ E04B *1/62*
U.S. Cl. 52—406 **5 Claims**

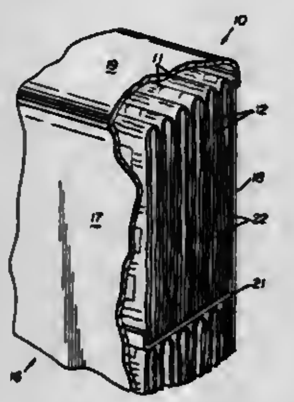

1. Insulation material consisting of a container formed of flexible material and of an insulating batt configuration, a plurality of layers of newspaper sheets positioned in said container, said newspaper sheets treated with a liquid fire resistant preservative, such as a solution of water glass, namely 40% $Na_2Si_3O_7$ and 60% H_2O and dried before they are positioned in said container so as to have a folded stiffened characteristic, said plurality of layers of newspaper sheets loosely filling the container and wherein a plurality of air spaces are formed between the sheets of the newspaper and the layers thereof.

4,300,323
FOAMED PLASTIC PANEL CONNECTING MEANS
Robert M. Meechan, and Gabriel V. Gallina, both of Sacramento, Calif., assignors to Owens-Corning Fiberglas Corporation, Toledo, Ohio
Filed Mar. 17, 1980, Ser. No. 130,880
Int. Cl.³ E04C *1/34*
U.S. Cl. 52—464 **3 Claims**

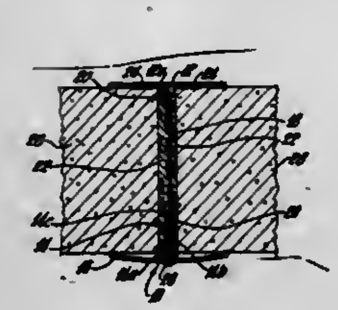

1. A connecting means for connecting a pair of rigid foamed plastic panels, of a type not having rigid outer skins of a different material, in edge-to-edge relationship to partially form or line a cold storage room, the connecting means comprising an elongated metallic rear clamping strip of generally T-shaped cross section, an elongated metallic screw-receiving channel member of generally Y-shaped cross section with parallel free end portions on the branches of the Y-shape forming a screw-receiving channel, a plurality of glass fiber reinforced plastic strips spaced from each other, elongated in the same direction as the rear clamping strip and the channel member, and each riveted by a plurality of rivets spaced along opposite longitudinal edge portions respectively to trunk portions of the rear clamping strip and the channel member, an elongated metallic front clamping strip of generally double-trunked T-shaped cross section with a pair of parallel trunk portions straddling the channel member, and a plurality of screws spaced longitudinally of and extending through the front clamping strip between the pair of trunk portions into the screw-receiving channel member.

4,300,324
ANHYDRITE CELLULAR CONCRETE COMPOSITE BUILDING ELEMENTS AND THEIR METHOD OF MANUFACTURE
Robert Koeppel, Bron, France, assignor to Produits Chimiques Ugine Kuhlmann, Paris, France
Division of Ser. No. 969,209, Dec. 13, 1978, Pat. No. 4,233,080, which is a continuation of Ser. No. 852,063, Nov. 16, 1977, abandoned. This application Apr. 16, 1980, Ser. No. 140,750
Claims priority, application France, Nov. 30, 1976, 76 38489; Dec. 21, 1976, 76 36028
Int. Cl.³ E04C *2/04;* **B28B** *21/02*
U.S. Cl. 52—612 **13 Claims**

1. Method of producing composite building elements comprising a cellular central layer sandwiched between two non-cellular facing layers which comprises pouring into the bottom of a mold a first facing layer comprised of an insoluble anhydrite binder containing an anhydrite setting catalyst and capable of being set to form a non-cellular layer, pouring onto said first layer a central layer comprised of an insoluble anhydrite binder, an anhydrite setting catalyst and containing a porogenic system comprising aluminum powder and an alkaline agent which produces a gas by reaction with the aluminum powder, and pouring onto said central layer before it sets and after it has expanded a second facing layer comprised of an insoluble anhydrite binder containing an anhydrite setting catalyst and capable of being set to form a non-cellular layer, said anhydrite binders comprising at least about 15% by weight of particles having a diameter of less than about 10 μm and at least about 20% by weight of particles having a diameter in excess of about 20 μm and having a mean or average diameter of between about 5 and 30 μm, the anhydrite likewise being characterized by a Blaine surface area between about 1000 and 8000 sq. cm./g, and permitting the layers to harden into a strong unitary composite building element.

11. Method according to claim 1, characterized in that the building elements are provided with a mortise during the molding thereof.

13. Composite building elements produced by the method of claim 11 in which the faces are equipped with a mortise so that the mortise of one of the elements faces directly opposite the mortise of another element to form a sheath which is filled with an anhydrite binder.

4,300,325
HOLDER ASSEMBLY FOR CASE PACKING MACHINE
Barry Campbell, Spokane, Wash., assignor to R. A. Pearson Company, Spokane, Wash.
Continuation-in-part of Ser. No. 955,350, Oct. 27, 1978, Pat. No. 4,259,826. This application Oct. 24, 1979, Ser. No. 88,052
Int. Cl.³ B65B *39/08, 35/56, 5/08*
U.S. Cl. 53—143 **19 Claims**

1. In a case packing machine for moving successive groups of containers lengthwise from a first station to a spaced second station and subsequently to a case packing station along a case packing framework, a holder assembly for releasably receiving and supporting a group of containers in a defined rectangular cluster at the second station, comprising:

a hollow box frame on the case packing framework at the second station and having opposed open ends;

fixed guide means arranged within the box frame perpendicular to its open ends for slidably engaging the side surfaces of a plurality of containers passing as a group in reversible directions alternatively through either of its open ends;

and spring biased guide means movably mounted within the

box frame and spaced from the fixed guide means to urge the received containers individually against the fixed guide

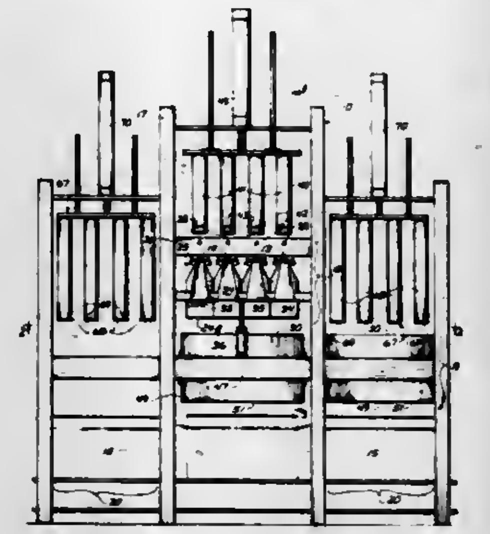

means and to frictionally engage the containers in a defined rectangular cluster supported within the box frame.

4,300,326
STRETCH WRAPPING APPARATUS WITH MECHANICAL CLOSURE
William H. Stackhouse, Clarksville, Ind., assignor to Lantech Inc., Louisville, Ky.
Filed Mar. 10, 1980, Ser. No. 128,873
Int. Cl.³ B65B *11/04*
U.S. Cl. 53—211 **13 Claims**

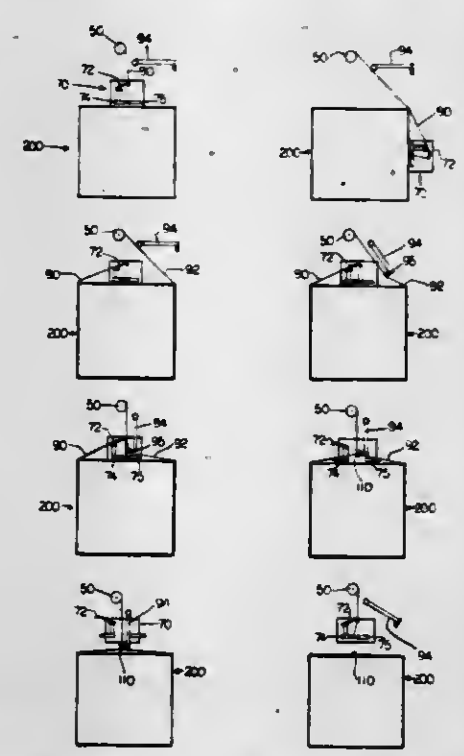

1. An apparatus for making a package comprising a frame, a carriage mounted on said frame, said carriage being adapted to hold a roll of material for rotation, a turntable adapted to support a load positioned adjacent said frame, drive means connected to said turntable and adapted to rotate said turntable and an associated load mounted on said turntable to cause a web of material to be pulled from the roll held by said carriage to overwrap said load, tensioning means adapted to tension said web of material as it is transferred to said load, clamp means mounted to said turntable, said clamp means being movable to and from said turntable to clamp said material web in two positions adjacent to said load, the first clamping position clamping the leading end of material through a wrap cycle until the trailing end of material is fastened to the leading end, the second clamping position clamping the leading end of material of the succeeding wrap before the completion of the entire wrap cycle, collapsing means moveably mounted adjacent the material path, said collapsing means moving into the material path carrying said trailing end adjacent a leading end of the material, and collapsing a trailing end of said material into a rope-like configuration, cutter means and fastening means mounted adjacent said collapsing means, said fastening means comprising an assembly for fastening the trailing end of the material web to the leading end of the material web and said cutter means adapted to sever said material web from said material roll.

4,300,327
BALE BAGGING APPARATUS
William L. Bridger, Fowler, Calif., assignor to Future Packaging Machinery Co., Inc., Fresno, Calif.
Filed Feb. 25, 1980, Ser. No. 124,543
Int. Cl.³ B65B *5/04*
U.S. Cl. 53—258 **8 Claims**

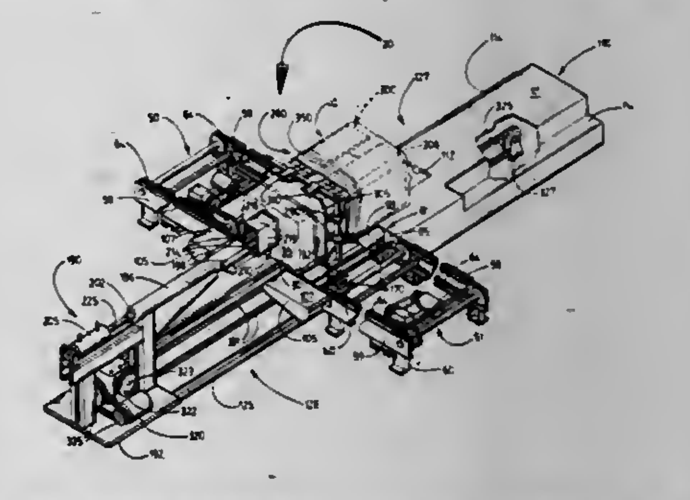

1. A bale bagging apparatus for covering an elongated bale having a central longitudinal axis with a bag having an open end and an opposite closed end comprising:

A. a feed conveyor for transporting such a bale rested thereon along a first horizontal, generally linear path in a predetermined direction with the bale disposed with said axis extended generally horizontally and transversely of said direction of travel, said conveyor having a predetermined discharge end;

B. a discharge conveyor for transporting such a bale rested thereon along the path with the bale disposed with said axis extended generally horizontally and transversely of said direction of travel, the discharge conveyor having a receiving end disposed in spaced end-to-end relationship along the path with said discharge end, the distance between said ends being substantially less than the dimension of the bale along the path;

C. a track disposed downwardly of the conveyors and extended along a predetermined second horizontal, generally linear path substantially normal to the first path and disposed therealong so that said ends of the conveyors are disposed centrally in the second path;

D. a carriage mounted on the track for reciprocal movement along the second path from side to side of the conveyors and having an upwardly extended pillar disposed to pass between said ends of the conveyors during the reciprocal movement;

E. power means for simultaneously driving the conveyors to transport a bale so disposed thereon along the first path in a direction from the feed conveyor toward the discharge conveyor;

F. means powering a stroke of the carriage along the second path from a receiving position at one side of the conveyors to a stripped position at the opposite side of the conveyors;

G. a sleeve upwardly mounted on the pillars for movement with the carriage along the second path above the conveyors, the sleeve being elongated along a central axis thereof extended horizontally along the second path in a vertical plane extending between said ends of the conveyors,

having a pair of open, longitudinally opposite ends, conforming centrally to the transverse cross section of the bale, and being adapted to receive such a bag in a disposition in which the bag is fitted outwardly of and along the sleeve with the open end thereof disposed toward the conveyors when the carriage is in the receiving position;

H. a stop disposed adjacent to said opposite side of the conveyors and dimensioned to pass centrally through the sleeve, the stop having a face normal to the central axis of the sleeve and a rod extended parallel to said axis from the face in a direction away from the conveyors to an end of the rod disposed beyond the stripped position;

I. means connected to the rod mounting the stop for reciprocal movement along the second path between a retaining position in which the face is adjacent to said opposite side of the conveyor and a releasing position in which the face is spaced substantially from the retaining position in a direction from the receiving position of the carriage toward the stripped position thereof;

J. control means for stopping the conveyors when the longitudinal axis of the bale is generally aligned in a direction along the second path with the central axis of the sleeve;

K. means for powering a stroke of the stop toward the retaining position thereof with said axes so aligned when the conveyors are stopped by the control means so that the face engages the bale retaining the bale on the conveyors against movement therefrom in a direction along the second path from the receiving position toward the stripped position;

L. means for powering a stroke of the carriage from the receiving position into the stripped position when a bag is so disposed on the sleeve and the face of the stop is so engaged with the bale, the sleeve passing over the bale so that the closed end of the bag engages the bale during said stroke and the bag is stripped from the sleeve into bagged relation with the bale as said stroke continues;

M. means for powering a stroke of the stop from the retaining position thereof into the releasing position thereof when said stroke of the carriage is substantially complete so that the face of the stop is spaced from the bale;

N. means for starting the conveyor driving means when said stroke of the stop into the released position thereof is substantially complete so that the bagged bale is transported along the first path in said predetermined direction from the second path; and

O. means for powering a stroke of the carriage from the stripped position into the receiving position when the bagged bale has been so transported along the first path out of the second path.

4,300,328

EASILY REMOVABLE HEAT RECOVERABLE CLOSURE

John S. Carlsen, Palo Alto, Calif., assignor to Raychem Corporation, Menlo Park, Calif.

Filed Jul. 20, 1979, Ser. No. 59,193

Int. Cl.³ B65B ***43/26, 61/18;*** **H02G** ***15/02;*** **B65D** ***73/02***

U.S. Cl. 53—492 **35 Claims**

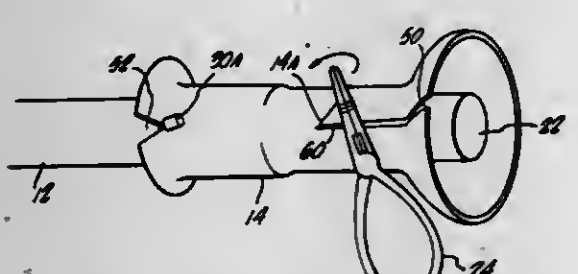

1. An article comprising:

(a) an elongate substrate;

(b) a heat recoverable closure disposed about an exterior portion of the substrate, the closure having a wall thickness of from about 30 to about 180 mils; and

(c) a flexible wire interposed at least partially between the substrate and the closure along the length of the substrate, wherein the wire has (i) sufficient flexibility, (ii) sufficient strength with an elastic modulus of at least about 25×10^6 psi, and (iii) a diameter of from about 10 to about 65 mils that the wire can be pulled through the closure by cutting the wall of the closure for removing the closure from the substrate after the closure has been recovered on the substrate; and

(d) anchoring means secured to the wire to keep an end of the wire from slipping relative to the closure when the wire is pulled.

16. A closure assembly for covering an elongate substrate comprising

(a) a tubular heat-recoverable end cap to be disposed about an exterior portion of the substrate, the end cap having a wall thickness of from about 30 to about 180 mils, and

(b) a flexible wire in the interior of the end cap substantially parallel to the longitudinal axis of the end cap, the wire having (i) sufficient flexibility, (ii) sufficient strength with an elastic modulus of at least about 25×10^6 psi, and (iii) a diameter of from about 10 to about 65 mils that it can be pulled through the wall of the end cap by cutting the wall of the end cap for removal of the end cap from the substrate after the end cap is heat-recovered on the substrate, wherein the wire doubles back on itself at the closed end of the end cap so that the wire comprises two sections extending along the longitudinal axis of the end cap.

26. A method for applying an easily removable closure to an elongate substrate comprising the steps of:

(a) placing a heat-recoverable closure having a wall thickness of from about 30 to about 180 mils about an exterior portion of the substrate;

(b) placing a flexible wire along an exterior portion of the substrate interposed between the closure and the substrate, at least a portion of the wire being substantially parallel to the longitudinal axis of the substrate, wherein the wire has (i) sufficient flexibility, (ii) sufficient strength with an elastic modulus of at least about 25×10^6 psi, and (iii) a diameter of from about 10 to about 65 mils that the wire can be pulled through the closure by cutting the wall of the closure when removing the closure from the substrate after the closure has been recovered on the substrate; and

(c) after the step of placing, heat-recovering the closure about the substrate.

32. A method for removing a closure assembly from an elongate substrate, the closure assembly comprising a heat-recovered end cap having a wall thickness of from about 30 to about 180 mils disposed about an exterior portion of the substrate at an end of the substrate, a strand of steel wire interposed at least partially between the substrate and the closure along the length of the substrate, the wire having a diameter of from about 10 to about 65 mils and being looped about an end of the substrate so that the wire comprises two sections extending along the length of the substrate, the wire having sufficient flexibility and a sufficiently high elastic modulus of at least about 25×10^6 psi that the wire can be pulled through the closure by cutting the wall of the closure for removing the closure from the substrate, the closure assembly including anchoring means secured to each section of the wire, the method comprising the steps of:

(a) removing the closed end of the end cap to expose the looped portion of the wire;

(b) cutting the strand of wire at the looped end to separate the two sections from each other;

(c) notching the cut end of the end cap; and

(d) pulling at least one of the wires through the closure starting at the notch.

4,300,329

FEEDING OF A CONTINUOUS ROPE OF CANDY OR LIKE CONFECTIONERY MATERIAL

Arthur V. Naylor, Seacroft, and John K. Spencer, Gainsborough, both of England, assignors to Baker Perkins Holdings Limited, Cambridge, England

Continuation of Ser. No. 877,290, Feb. 13, 1978, abandoned. This application Dec. 4, 1979, Ser. No. 100,012

Claims priority, application United Kingdom, Feb. 13, 1977, 6822/77

Int. Cl.³ B65B ***57/02***

U.S. Cl. 53—506 **5 Claims**

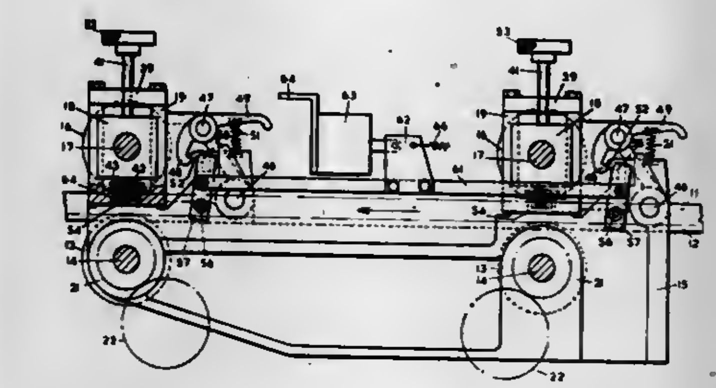

1. In a sweet-forming and wrapping machine comprising a wrapping mechanism, feed rollers for feeding a rope of candy or like confectionery towards the wrapping mechanism, cutting mechanism for severing sweets in succession from the leading end of the rope, means for transferring the sweets in succession to the wrapping mechanism, means for feeding wrappers in succession into the path of transfer of the sweets so that each sweet enters the wrapping mechanism with a wrapper partially folded about it, drum means for driving said machine, a single detector for sensing the feed of the wrappers and a switch immediately responsive to a detection by said detector of a failure in the wrapper feed to stop the machine drive, the improvement which consists in the provision, in a machine capable of running at such a high speed that the wrapping mechanism overruns an amount sufficient to complete the wrapping of partially wrapped sweets following the stopping of said machine drive by said stopping switch, of a device also controlled by said detector for rendering said feed rollers immediately ineffective thus to prevent overrun of rope feed in response to detection of a failure in the wrapper feed notwithstanding the overrun of said wrapping mechanism following stopping of said machine drive.

4,300,330

BOTTLE LOADING MACHINE

Thomas S. Hartness, Greenville, S.C., assignor to Hartness International, Inc., Greenville, S.C.

Filed Nov. 13, 1979, Ser. No. 93,869

Int. Cl.³ B65B ***21/06, 21/18***

U.S. Cl. 53—539 **7 Claims**

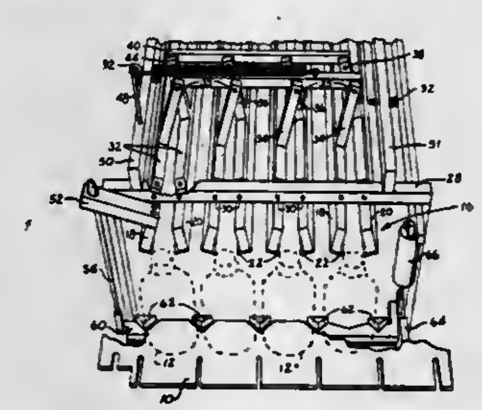

1. A bottle loading machine having a bottle transfer means for transferring charges of bottles in aligned rows to a case loading station for being deposited through a grid set into a case carried therebelow comprising:

aligned pairs of gripping arms carried in the path of said transfer means directly over said grid set;

means for shifting each pair of said gripping arms to a first closed position for receiving bottles from a respective row and supporting said bottles by the neck of said bottles, and each of said pairs of gripping arms when in said first position defining a track, one end of said track being opened so that a plurality of bottles can be loaded in succession onto each respective track;

means for pivoting each arm of each respective pair of arms away from said necks of said bottles to an open position for dropping said bottles freely into said grid set for being deposited into said case.

4,300,331

APPARATUS FOR AUTOMATICALLY PACKING RECORD DISCS

Shigeru Yoshiba, Sagamihara, Japan, assignor to Victor Company of Japan, Ltd., Yokohama, Japan

Filed Nov. 29, 1979, Ser. No. 99,192

Int. Cl.³ B65B ***43/26***

U.S. Cl. 53—573 **6 Claims**

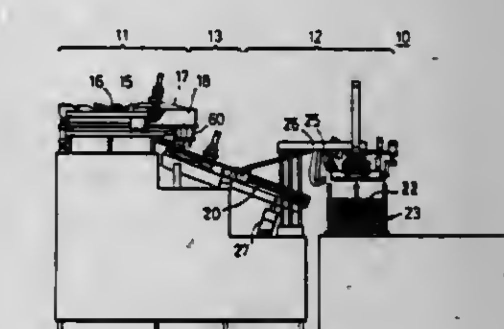

1. An apparatus for automatically packing record discs comprising: an inner bag stock section stocking therein a number of inner bags in stacked arrangement; opening means for opening the unsealed edge of the uppermost inner bag in said inner back stock section; a record disc carrying table for receiving thereon a record disc to be packed, said record disc carrying table being stationarily disposed opposite the unsealed edge of the uppermost inner bag opened by said opening means; a holding mechanism comprising a pair of arm members movably disposed with the distal end thereof facing toward the unsealed edge of the uppermost inner bag opened by said opening means, means for moving the arm members to enter into the uppermost inner bag through the unsealed edge opened by said opening means, and means for moving the arm members apart from each other entered into the uppermost inner bag, whereby the uppermost inner bag is supported by the engagement between the arm members and the opposite ends of the unsealed edge thereof; a moving mechanism for moving the arm members with the supported inner bag toward said record disc carrying table in such a manner that the arm members pass by opposite sides of the record disc carrying table; and a stop member for restricting the record disc placed on said record disc carrying table from shifting in at least a direction in which said inner bag moves; whereby said moving mechanism draws said inner bag over the record disc on said record disc carrying table, said record disc being in effect inserted into the inner bag while remaining stationary on the stationary record disc carrying table.

4,300,332

SAFETY CONTROL FOR RIDING LAWN MOWER

Harold P. Jackson, McDonough, Ga., assignor to McDonough Power Equipment, Division of Fuqua Industries Inc., McDonough, Ga.

Filed Mar. 5, 1980, Ser. No. 127,492

Int. Cl.³ A01D *69/10*

U.S. Cl. 56—11.3 **11 Claims**

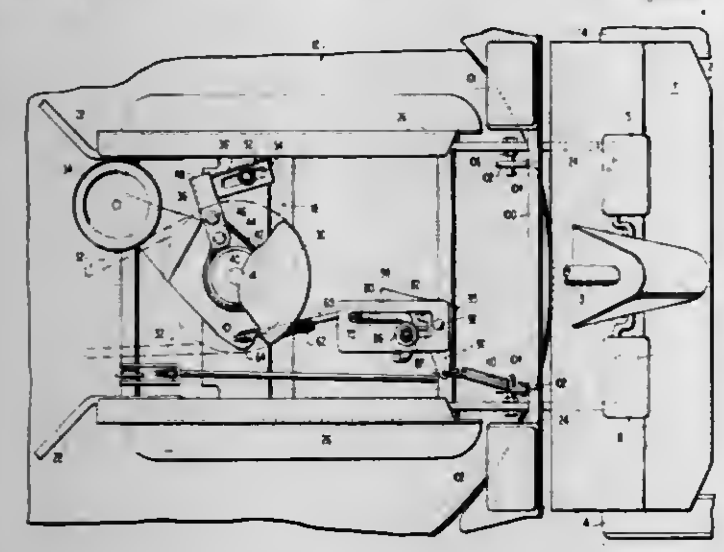

1. A power-driven riding lawn mower including a rotatable cutting blade, first means for controlling operation of the cutting blade, second means for controlling the first means including a control member movable between a first position for operating the cutting blade and a second position for stopping the cutting blade, biasing means urging said control member to said second position thereof, retaining means for releasably holding said control member when in said first position, a foot member engageable by the operator's feet and connected to said retaining means and being movable between a depressed position for holding the control member in said first position thereof and a raised position for permitting the control member to move to said second position thereof, and means biasing the foot member to its raised position, a support having a passage therein receiving said control member and wherein said retaining means is mounted to said support for movement between a first position for holding said control member in said first position thereof and a second position for releasing the control member and permitting it to move to said second position.

4,300,333

AUGER CONVEYOR FOR A CROP HARVESTER

Sidney E. Anderson, Geneseo, Ill., assignor to Deere & Company, Moline, Ill.

Filed Jul. 18, 1980, Ser. No. 170,263

Int. Cl.³ A01D *57/00*

U.S. Cl. 56—14.5 **20 Claims**

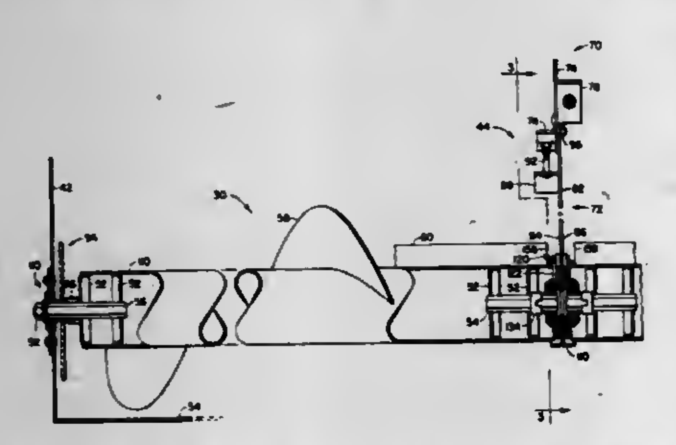

1. In a mobile harvesting machine having a header including an elongated transversely extending gatherer with a rear wall having a discharge opening and a rear frame member and, generally contiguous with and extending forwardly from the rear wall, opposite ends walls and a floor, an improved auger conveyor assembled so as to span the gatherer between the end walls and closely spaced above and forward of the floor and rear wall respectively comprising:

first and second auger assemblies positioned approximately co-axially aligned, each having an outer end rotatably supported in an end wall and an inner end including support means for rotatably and releasably supporting said inner end, the respective auger assemblies being disposed so that the support means of their inner ends are closely adjacent to one another;

a suspension member rigidly connected to the rear frame member and extending generally downward to terminate adjacent the support means of the inner ends of the respective auger assemblies and having socket means such that, during assembly, the socket means engage the respective support means of the inner end of each auger assembly upon movement of each said inner end alongside the suspension member in a direction approximately perpendicular to the axis of the assembled conveyor and so that each auger assembly inner end is independently supported by the suspension member; and

means for rotatably driving each auger assembly.

4,300,334

POWER RAKE FOOT GUARD

Charles E. Hines, Lincoln, Nebr., assignor to Outboard Marine Corporation, Waukegan, Ill.

Filed Feb. 4, 1980, Ser. No. 118,536

Int. Cl.³ A01D *67/00*

U.S. Cl. 56—17.4 **1 Claim**

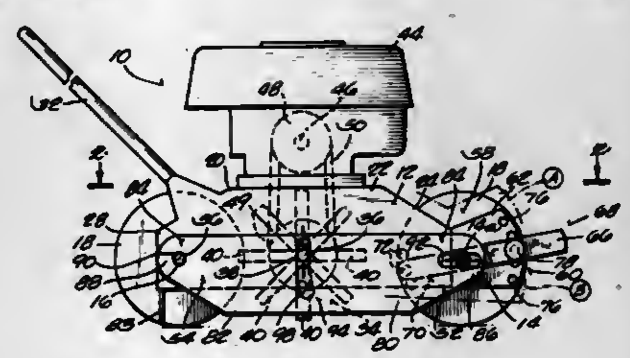

1. A power rake comprising a housing, a rear axle fixed relative to said housing, a front axle, means mounting said front axle on said housing for vertical adjustment relative to said housing, ground engaging wheels rotatably mounted on said axles, a reel member carried by said housing parallel to and between said axles for rotation about an axis fixed relative to said housing, said reel member including an axle supported for rotation about said axis fixed relative to said housing, said reel member axle including an end portion extending outwardly of said housing, a side plate supported on said axles independently of said housing, and intermediate said wheels and said housing, said side plate including a lower edge and opposite end portions, means for accommodating movement of said end portion of said reel member axle relative to said side plate during vertical adjustment of said front axle relative to said housing, rear connecting means for pivotally attaching one of said side plate end portions on said rear axle, and front connecting means for attaching the other one of said side plate end portions on said front axle and for accommodating movement of said front axle relative to said side plate during vertical adjustment of said front axle relative to said housing so as to maintain said lower edge of said side plate in a closely spaced relationship from the ground regardless of the vertical adjustment of said front axle relative to said housing.

4,300,335

HARVESTER ATTACHMENT

Sidney E. Anderson, Geneseo, Ill., assignor to Deere & Company, Moline, Ill.

Filed Jul. 21, 1980, Ser. No. 170,371

Int. Cl.³ A01D *45/02*

U.S. Cl. 56—119 **8 Claims**

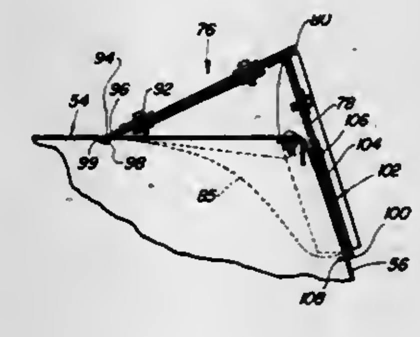

1. In a multi-row crop harvester having a plurality of forwardly extending laterally spaced divider members adapted to move between rows of row planted crops and fore and aft crop receiving passages in the space between adjacent divider members, each inner divider member including a hood-like downwardly and forwardly inclined shield structure on top of the divider member, the shield structure including a generally semi-conical forward portion converging to a forward point, a generally inverted U-shaped rear portion, a generally inverted U-shaped central portion between the forward and rear portion and a rearwardly facing riser wall extending between the central portion and the rearward portion, the combination therewith of improved shield extensions removably mounted on top of the shield structures, each shield extension comprising:

an upwardly and forwardly inclined rear wall extending upwardly from the riser wall and having a generally inverted U-shaped upper edge;

a front panel extending forwardly from the upper edge of the rear wall, and having a generally truncated semiconical shape with forwardly converging sides and a downwardly and forwardly inclined top portion, the lower, forward edges of the sides and the top portion seating against the top of the central portion of the shield structure with the fore and aft center line of the shield extension being vertically aligned with the fore and aft center line of the shield structure;

at least one tab element mounted on and extending forwardly from the lower front edge of the front panel;

at least one opening in the central portion of the shield structure adapted to receive the tab element when the shield extension is mounted on the shield structure;

a first pair of laterally spaced latch elements disposed on the riser wall on opposite sides of the shield structure center line;

and a second pair of latch elements respectively mounted on the shield extension rear wall and shiftable between locking positions wherein they engage the first pair of latch elements to lock the shield extension to the shield structure and unlocking position wherein they disengage the first pair of locking elements to permit the upward separation of the rearward and of the shield extension from the shield structure and the withdrawal of the tab element from the opening in the central portion of the shield structure.

4,300,336

CUTTER BLADE ASSEMBLY FOR WEED AND GRASS TRIMMERS

Hiromasa Miyata, Evanston, Ill., assignor to Echo, Incorporated, Northbrook, Ill.

Filed Sep. 10, 1979, Ser. No. 73,923

Int. Cl.³ A01D *55/18*

U.S. Cl. 56—295 **4 Claims**

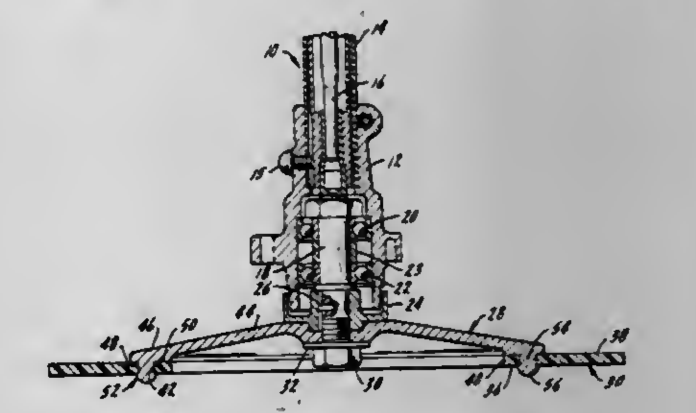

1. A lawn trimmer blade comprising a generally flat plate made solely of a flexible plastic material, said blade being generally circular and including a rim defining a central opening and a plurality of cutting teeth extending outwardly from said rim, and means defined by said rim whereby the blade can be secured to said lawn trimmer at said rim and beyond said central opening, wherein said cutting teeth each have a front end, a back end, and an outer end, said cutting teeth each have a predetermined length by which they extend outwardly from said rim, said cutting teeth have a predetermined width, and said cutting teeth have a top surface, a bottom surface, and a predetermined thickness between said surfaces, and rib means protrudes outwardly from at least one of said top and bottom surfaces of each cutting tooth and extends along the length of each cutting tooth.

4,300,337

POWER OPERATED BRUSH RAKE

David E. Sharp, Rte. 104, North Rose, N.Y. 14516

Filed Mar. 10, 1980, Ser. No. 128,794

Int. Cl.³ A01D *78/06*

U.S. Cl. 56—376 **6 Claims**

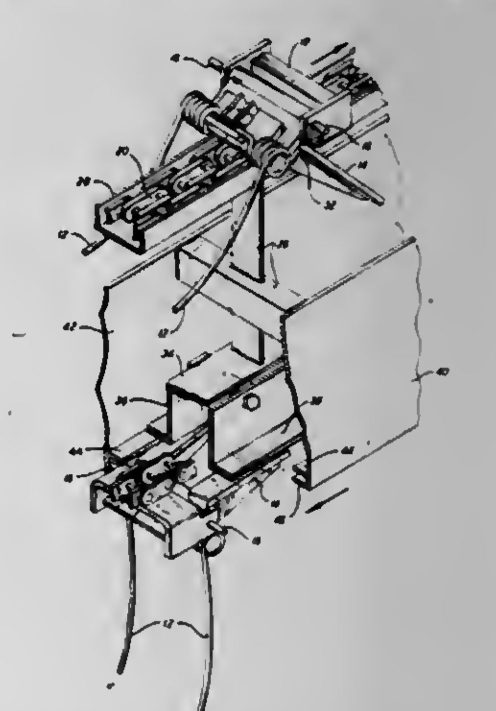

1. Powered rake apparatus for attachment to a tractor, or the like, for operation by power supplied from the tractor while in a stationary position, said apparatus comprising:

(a) a support frame extending substantially horizontally between first and second ends;
(b) a pair of side plates supported in spaced, substantially vertical planes on each side of said frame and extending between said first and second ends thereof;
(c) an endless, flexible chain having a plurality of mounting brackets fixedly connected to said chain;
(d) a pair of rotatable sprockets respectively supported at said first and second frame ends to define a horizontally elongated path of movement for said chain divided into upper and lower runs between said side plates, one of said sprockets being powered to move said chain along said path;
(f) a pair of elongated, unitary rake tines pivotally mounted upon each of said mounting brackets by a pin having end portions extending laterally outward from each side of said brackets;
(g) a pair of counterbalance arms fixedly connected to each of said pair of tines for rotation therewith about said pin, the arrangement of said tines, arms and pin being such that while traveling along said upper run said tines are maintained by gravity in a folded position substantially entirely below said chain, and when passing from said upper to said lower run said tines and arms rotate by gravity to a position wherein said tines extend downwardly from said chains;
(h) a pair of elongated members removably mounted in a fixed position upon said support frame to extend from a position adjacent the end at which travel along said lower run begins for a predetermined portion of said lower run, said elongated members presenting downwardly facing surfaces for contact by said pair of arms to prevent rotation of said arms and tines away from said downwardly extending position of said tines during travel in said portion of said lower run; and
(i) a pair of flange members extending inwardly from each of said side plates, each pair of flange members beginning at spaced positions adjacent the end at which travel along said lower run begins and gradually converging to parallel positions spaced by a distance slightly greater than the diameter of said pins, said side plates being spaced from one another by a distance slightly greater than the distance between the ends of said pins, whereby said pins are guided into the parallel portions of said flange members and constrained on three sides by said flange members and said side plates.

4,300,338
METHOD OF PRODUCING COAXIAL CABLE
Robert K. Harman, and Melvin Maki, both of Kanata, Canada, assignors to Control Data Canada, Ltd., Mississauga, Canada
Filed Oct. 11, 1979, Ser. No. 83,863
Claims priority, application Canada, Oct. 13, 1978, 313314
Int. Cl.³ H01Q *13/22*
U.S. Cl. 57—3 **5 Claims**

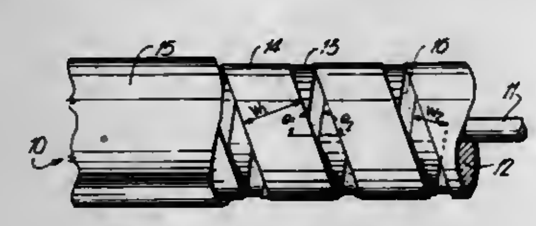

1. A method of manufacturing a leaky coaxial cable, comprising the steps of:
providing a core having an inner conductor surrounded by a dielectric layer,
selecting at least two conductive tapes having tape widths and pitch angles which provide apertures having a total area which is a predetermined fraction of the surface area of the cable, and apertures also having a predetermined shape and being of a predetermined number per defined length, and
winding said at least two conductive tapes around said core having said inner conductor surrounded by said dielectric layer.

4,300,339
SYSTEM FOR STRANDING AND CABLING ELONGATE FILAMENTS
John F. Orlandi, Lombard, and Timothy J. Moore, Elgin, both of Ill., assignors to Belden Corporation, Geneva, Ill.
Filed Jun. 28, 1979, Ser. No. 53,024
Int. Cl.³ D07B *3/04*
U.S. Cl. 57—58.34 **12 Claims**

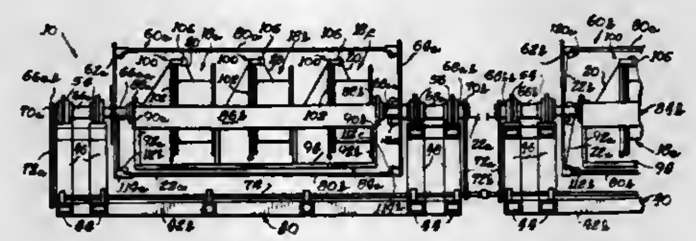

1. A system for stranding elongate filaments and cabling the stranded filaments into an elongate cable, said system comprising, in combination,
a plurality of stranding modules each of which includes frame means defining a longitudinal axis and is adapted for end-to-end positioning with similar modules so as to establish a plurality of serially related stranding modules,
each of said stranding modules further including flier guide means supported by the associated frame means for rotation about an axis substantially parallel to the longitudinal axis of the associated frame means,
carriage means supported by each of said frame means interiorly of the associated flier guide means during rotation thereof, said carriage means being adapted to remain substantially stationary relative to said frame means during rotation of the associated flier guide means,
at least two filament supply reels releasably mounted on each of said carriage means, each of said supply reels being adapted to support an elongate filament in wound relation thereon and being mounted on its associated carriage means so that the axis of each supply reel is substantially coaxial with the axis of rotation of the corresponding flier guide means,
a plurality of guide rollers carried by each of said carriage means for receiving and guiding a filament from each of the corresponding filament supply reels to substantially the axis of rotation of a predetermined end of said carriage means,
payoff flier means including a radially disposed flier arm operatively associated with each of said supply reels and having guide means at its radial outer end for guiding cooperation with the corresponding elongate filament so that said filament is paid out from the associated supply reel under substantially constant axial tension when the filament is subjected to an axial force sufficient to draw it from its associated supply reel,
drive means independently operatively associated with each of said flier guide means for effecting predetermined rotation thereof relative to the associated frame means so as to strand the filaments from the corresponding supply reels to form a stranded filament at said predetermined end of each of said carriage means,
second guide means carried by each of said flier guide means for guiding the corresponding formed stranded filament from said predetermined end of said carriage means to an outlet end of the associated frame means during rotation of said flier guide means, said outlet end being disposed longitudinally opposite said predetermined end of said carriage means,
said carriage means including a carriage frame having axially extending support shafts affixed thereto and rotatably supported by the corresponding frame means, said support shafts being adapted to pass stranded filaments longitudinally therethrough to facilitate passage of stranded filaments between said serially related modules,
each successive serially related module being adapted to helically strand at least two elongate filaments and guide the stranded filament to the corresponding outlet end thereof while simultaneously receiving any stranded filaments from the adjacent upstream module and guiding them to the corresponding outlet end while maintaining the stranded filaments in separated relation,
and means positioned downstream of the last of said serially related stranding modules for cabling all of the strands from said modules.

4,300,340
HOUSING FOR HOLDING A THREAD MONITOR COMPRISING A THREAD TENSION SENSOR
Hans Pozzo, Ingolstadt, Fed. Rep. of Germany, assignor to Schubert & Salzer, Ingolstadt, Fed. Rep. of Germany
Filed Apr. 22, 1980, Ser. No. 142,626
Claims priority, application Fed. Rep. of Germany, Apr. 26, 1979, 7912192[U]
Int. Cl.³ D01H *13/16*
U.S. Cl. 57—80 **4 Claims**

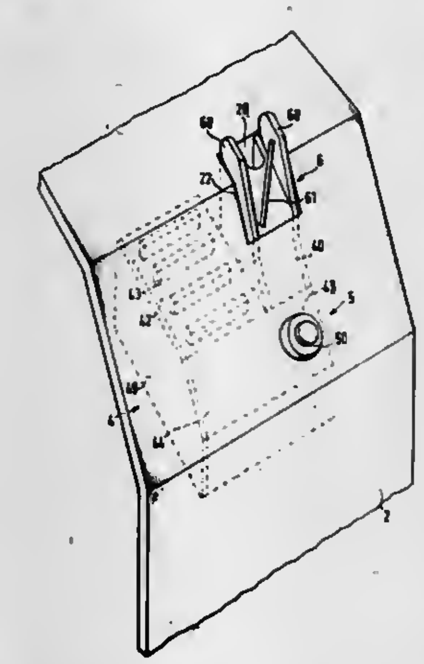

1. A housing for holding a thread monitor, said thread monitor including a thread tension sensor and a switching member for controlling a fiber feed device of a spinning station of an open-end spinning station, a switching member for operating said thread monitor, and a support cover extending over a thread outlet pipe of said spinning station, comprising:
an opening provided in said support cover;
attachment means carried by aid switching member for attaching said housing to said support cover;
a second attachment means carried by said housing and extending through said opening for aligning said housing relative to said support cover.

4,300,341
HOUSING FOR HOLDING A CONTROL DEVICE WITH HEAT-GENERATING ELEMENTS FOR A THREAD MONITOR OF AN OPEN-END SPINNING STATION
Hans Pozzo, Ingolstadt, Fed. Rep. of Germany, assignor to Schubert & Salzer, Ingolstadt, Fed. Rep. of Germany
Filed Apr. 22, 1980, Ser. No. 142,627
Claims priority, application Fed. Rep. of Germany, Apr. 26, 1979, 7912156[U]
Int. Cl.³ D01H *13/16*
U.S. Cl. 57—80 **14 Claims**

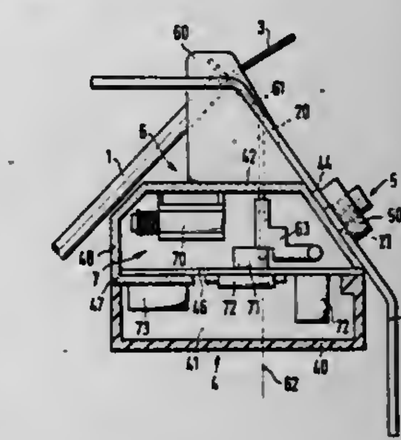

1. A plastic housing for supporting heat-generating elements (70, 73) forming part of a control device (7) associated with a thread monitor of an open-end spinning station comprising:
a wall portion of said housing being constructed of metal providing a cooling plate,
said heat generating elements (70, 73) being connected to said metal wall portion so that heat generated by said heat generating element can be dissipated through said metal wall portion.

4,300,342
ROVING FRAME STOP APPARATUS
James L. Highsmith, Jr., Charlotte, N.C., assignor to El-Trol, Inc., Charlotte, N.C.
Filed Dec. 5, 1979, Ser. No. 100,451
Int. Cl.³ D01H *13/16*
U.S. Cl. 57—81 **13 Claims**

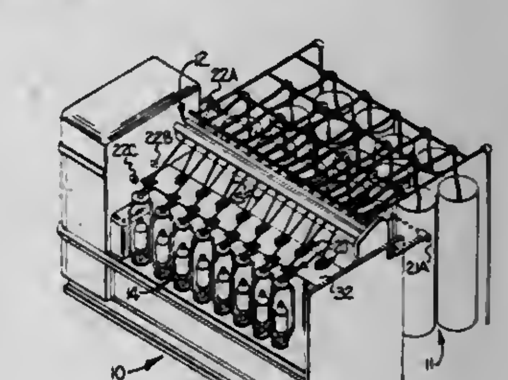

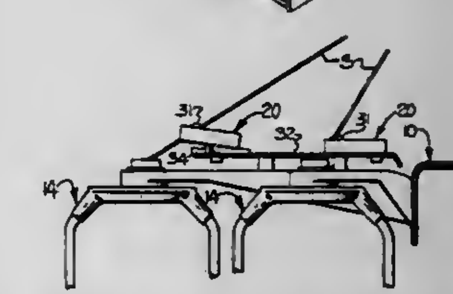

1. In a roving frame having a row of drafting units and a row of aligned rotatable flyers for receiving textile roving strands from corresponding drafting units and forming wound packages therefrom, the combination therewith of a control system for stopping the operation of the roving frame upon the interruption of a strand, comprising

a plurality of individual end detectors each cooperating with a corresponding roving strand for detecting the presence or absence of the roving strand as it passes along a path from one of said drafting units to a corresponding rotatable flyer, each individual end detector comprising a light source and a cooperating photoelectric receiver closely positioned on opposite sides of the roving strand path and means operatively associated with said photoelectric receiver for producing a control signal in response to the absence of the roving between said light source and said receiver;

photoelectric scanning means comprising a light source located adjacent one end of the roving frame and oriented for directing a beam of light longitudinally of the roving frame and a cooperating photoelectric receiver located adjacent the other end of the roving frame and in the path of light from said light source, and means operatively associated with said receiver for producing a control signal in response to a predetermined change in the intensity of the light from said light source, said scanning means having a scanning axis extending longitudinally of the roving frame and adjacent the paths of travel of the respective roving strands from said drafting units to said rotatable flyers, and

means operable upon receipt of a control signal from any of said individual end detectors and said photoelectric scanning means for stopping the operation of said roving frame.

4,300,343
GUT

Masaaki Nakamura, and Hisaaki Ueba, both of Mibu, Japan, assignors to Kureha Kagaku Kogyo Kabushiki Kaisha, Tokyo and Kureha Gosen Kabushiki Kaisha, Toshigi, both of, Japan

Filed Jul. 16, 1979, Ser. No. 57,816

Claims priority, application Japan, Jul. 27, 1978, 53-90964

Int. Cl.^{3} D02G *3/00, 3/36*

U.S. Cl. 57—251 15 Claims

1. A gut prepared by collectively twisting a plurality of monofilaments in the number of from 5 to 100 made of a thermoplastic resin spun from a spinning nozzle, and maintaining said plurality of monofilaments at a temperature higher than the softening point of said resin, thereby producing a gut wherein the monofilaments in the central portion of the gut adhere to one another such that the independent shape of each monofilament cannot be distinguished and wherein the monofilaments at the periphery of the gut adhere to one another while maintaining their independent shape.

4,300,344
FEED YARN AND PROCESS FOR THE MANUFACTURE OF A VOLUMINOUS FALSE TWIST TEXTURIZED HAIRY YARN

Günther Bauer, Königsbrunn; Wolfgang Burghardt, Bobingen, and Hilmar Möller, Neusäss-Westheim, all of Fed. Rep. of Germany, assignors to Hoechst Aktiengesellschaft, Fed. Rep. of Germany

Filed Nov. 21, 1979, Ser. No. 96,482

Claims priority, application Fed. Rep. of Germany, Nov. 24, 1978, 2850854

Int. Cl.^{3} D02J *1/00;* D02G *3/34*

U.S. Cl. 57—288 7 Claims

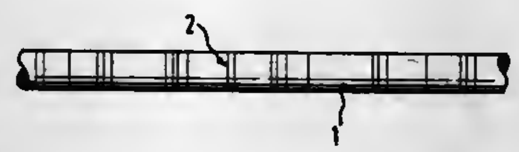

5. A process for the manufacture of a voluminous filament yarn having individual protruding filament ends comprising the drawing and false twist texturizing of a drawable polyester feed yarn in which feed yarn part at least of the filaments have a flex abrasion resistance of less than 1500 cycles, wherein at least part of the filaments of the yarn, due to the use of a special finish, have a crack index of more than 5.

4,300,345
METHOD FOR WINDING A FALSE TWISTED YARN IN A CHEESE

Isamu Kasai, Oomihachiman; Kazuo Tomita, and Hisao Inuyama, both of Ootsu, all of Japan, assignors to Toray Industries, Inc., Tokyo, Japan

Filed Nov. 13, 1979, Ser. No. 93,628

Claims priority, application Japan, Nov. 27, 1978, 53-145291

Int. Cl.^{3} D02G *1/02*

U.S. Cl. 57—290 16 Claims

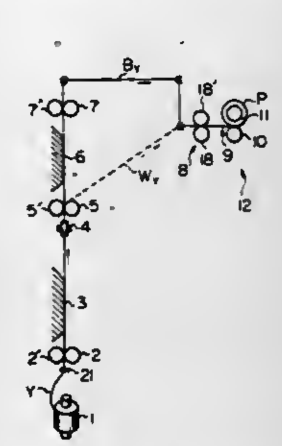

1. A method for cheese winding around a bobbin a false twisted yarn, crimps of which are thermally stabilized by being subjected to a heat treatment in a second heat treatment region at a second feed ration Mf % of between 5% and the shrinking limit of said yarn, and which is delivered at a speed of V cm/sec from a false twisting region, wherein false twists imparted into a fed yarn running back therealong are heat set, by means of a yarn delivery means to said bobbin rotatably supported in a winding apparatus where said false twisted yarn is traversed to and fro along said bobbin to form a cheese thereon, characterized in that the time period S sec wherein said false twisted yarn travels from said yarn delivery means to said bobbin satisfies the following equation (1),

$$\alpha/V \leqq S \leqq \beta/\sqrt{2} \qquad (1)$$

wherein:

α is 15, and

β is $5/6\times10^5$,

whereby a soft wound straight cheese with an apparent density of at most 0.3 g/cm^3 is obtained.

4,300,346
EXTENSIBLE STRAP

Hans Kugler, Bad Soden, Fed. Rep. of Germany, assignor to Hans E. Kalanke, Bachhausen, Fed. Rep. of Germany

Filed Jun. 25, 1979, Ser. No. 51,882

Claims priority, application Fed. Rep. of Germany, Jun. 30, 1978, 2828862

Int. Cl.^{3} A44C *5/08*

U.S. Cl. 59—79 R 4 Claims

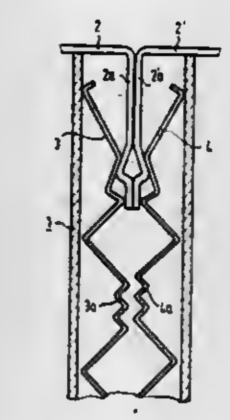

1. An extensible strap comprising a plurality of tubular links arranged in two rows with the length of each link transverse to the length of the strap and the links in one row offset by half a link width from the links in the other row, each link containing two leaf springs arranged to act in the longitudinal direction of the strap and being connected to the two adjacent links in the other row by connecting members, which have arms projecting into respective links to be received between the leaf springs, two connecting member arms being received between each pair of leaf springs, and means for locking said leaf springs in their respective links to prevent them form slipping out of the link, said means for locking said leaf springs being characterized by the two leaf springs having complementary corrugated shapes over portions of their lengths.

4,300,347
SHUT-OFF VALVE ARRANGEMENT FOR A GAS TURBINE ENGINE FUEL

Trevor S. Smith, Sutton Coldfield, England, assignor to Lucas Industries Limited, Birmingham, England

Filed Feb. 15, 1980, Ser. No. 121,681

Claims priority, application United Kingdom, Mar. 1, 1979, 7244/79

Int. Cl.^{3} F02C *7/22*

U.S. Cl. 60—39.28 R 4 Claims

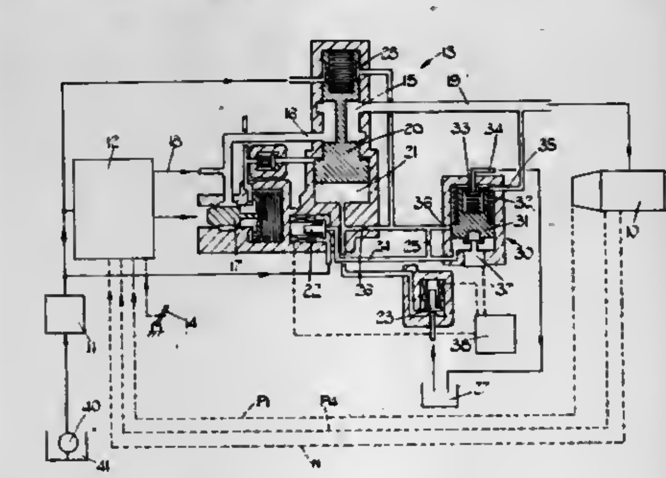

1. A shut-off valve arrangement for a gas turbine engine fuel system, comprising a shut-off valve having an outlet passage through which fuel can flow to the engine, and a control member movable in response to an increase in a servo pressure signal to an open position to permit fuel flow through said outlet passage, a drain valve having a drain outlet, an inlet port communicating with said outlet passage and a control element responsive to an increase in said servo pressure signal to prevent flow from said outlet passage to said drain outlet, and a servo pressure signal control means for selectively increasing or decreasing said servo pressure signal, said servo pressure signal control means comprising a first pilot valve for applying said servo pressure signal to said shut-of valve control member and to said drain valve control element, and auxiliary valve means operable by said shut-off valve control member for applying said servo pressure signal to said control member and said control element when said shut-off valve is open, whereby operation of said pilot valve to open said shut-off and drain valves causes these valves to be maintained open by pressure applied through said auxiliary valve means.

4,300,348
FUEL CONTROL SYSTEM FOR A GAS TURBINE ENGINE

Geoffrey A. Lewis, Solihull, and Brian E. Sparks, Shrewley Common, both of United Kingdom, assignors to Lucas Industries Limited, Birmingham, England

Filed Feb. 27, 1980, Ser. No. 125,276

Claims priority, application United Kingdom, Apr. 10, 1979, 12667/79

Int. Cl.^{3} F02C *9/28, 9/38*

U.S. Cl. 60—39.28 R 11 Claims

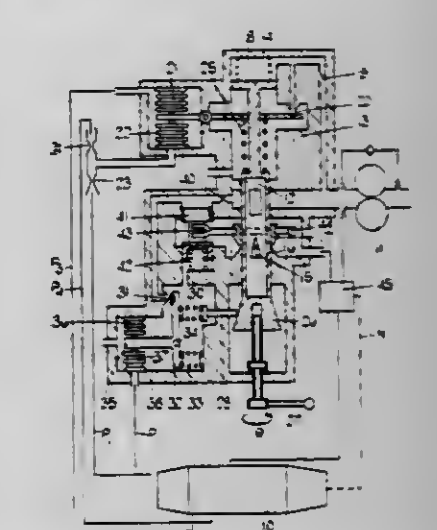

1. A system for controlling fuel flow to a gas turbine engine in accordance with a difference between an inlet pressure and a delivery pressure of the engine, comprising a metering device having a control element, means for positioning said control element in accordance with a sensed value of said delivery pressure, means for modifying fuel flow through said metering device, a three-dimensional cam movable in response to a desired engine thrust and in response to one of said pressures, said cam being profiled in accordance with calculated values of the other of said pressures, said calculated values corresponding to combinations of said desired thrust and said one pressure, a cam follower co-operating with said cam, and control means responsive to the position of said cam follower and to a sensed value of said other pressure for operating said fuel flow modifying means.

4,300,349

GAS TURBINE WITH HEAT-INSULATING LINING

Johann Heckel, Fellbach, Fed. Rep. of Germany, assignor to Daimler-Benz Aktiengesellschaft, Stuttgart, Fed. Rep. of Germany

Filed Sep. 28, 1979, Ser. No. 80,027

Claims priority, application Fed. Rep. of Germany, Sep. 29, 1978, 2842410

Int. Cl.³ F02C *7/18, 7/24*

U.S. Cl. 60—39.51 R **9 Claims**

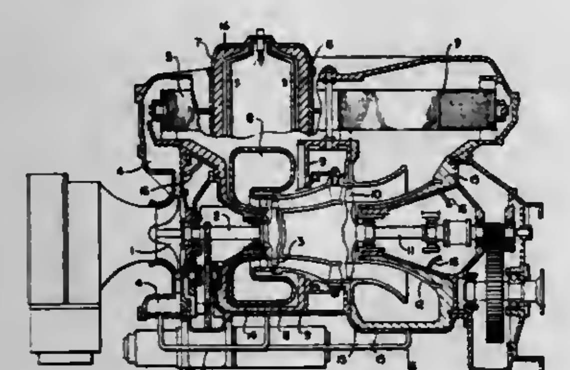

1. A gas turbine which includes a combustion chamber means, a gas turbine inlet means, a diffusor means disposed at an outlet of the gas turbine, an external metallic supporting housing means including wall parts for enclosing the combustion chamber means, the gas turbine inlet means, and diffusor means, and heat insulating inner lining means disposed at least in an area of the combustion chamber means, characterized in that the heat insulating inner lining means is formed of a gas-permeable porous material consisting essentially of an elastic fiber-ceramic composite material, means are provided for mounting the lining means on the wall parts at a predetermined distance from the wall parts so as to define a sealed air distribution space between the lining means and associated wall parts, said mounting means including a multitude of spacers between the inner side of the wall parts facing the lining means and the associated lining means, and in that means are provided for communicating the air distribution space with an air source, whereby air may be forced through the insulating lining in a direction opposite to heat flux from said combustion chamber means thereby producing a forced convective return transport of heat into the combustion chamber means.

4,300,350

BISTABLE THERMAL ACTUATOR

Dale F. Becker, Duluth, Ga., assignor to Sangamo Weston, Inc., Norcross, Ga.

Filed Mar. 24, 1980, Ser. No. 133,216

Int. Cl.³ F03G *7/06*

U.S. Cl. 60—528 **10 Claims**

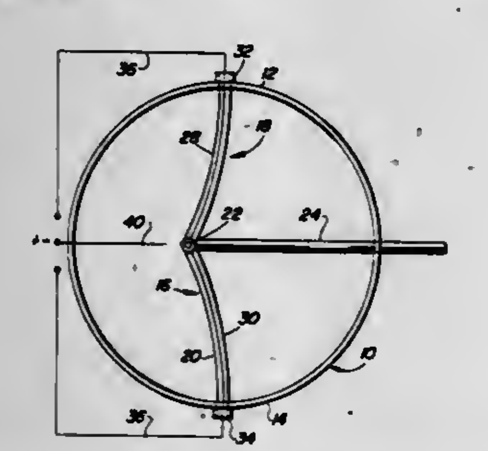

1. A bistable thermal actuator, comprising: a pair of spaced apart supports, an elongated composite bimetal element extending across and between the supports and having opposite ends adjacent and connected respectively to the supports, said element having a total length in excess of the distance between the supports so that the element buckles substantially symmetrically in one direction at its central portion substantially midway between the supports to form a pair of end-to-end arcuate halves, said element occupying a first position with its central portion over center at one side of a straight line between its opposite ends and movable over center as respects that line to a second position, whereby, when heat is applied exclusively to one half, the element moves from its first position to its second position and, when heat is applied exclusively to the other half, the element moves back to its first position.

4,300,351

BOOSTED HYDRO-PNEUMATIC DRIVE

Artur Grüllmeier, Salem, Fed. Rep. of Germany, assignor to Eugen Rapp and Paul Haug, both of, Fed. Rep. of Germany

PCT No. PCT/EP79/00027, § 371 Date Dec. 26, 1979, § 102(e) Date Dec. 20, 1979, PCT Pub. No. WO79/00986, PCT Pub. Date Nov. 29, 1979

PCT Filed Apr. 21, 1979, Ser. No. 179,296

Claims priority, application Fed. Rep. of Germany, Apr. 26, 1978, 2818337

Int. Cl.³ F15B *7/00, 15/18*

U.S. Cl. 60—560 **3 Claims**

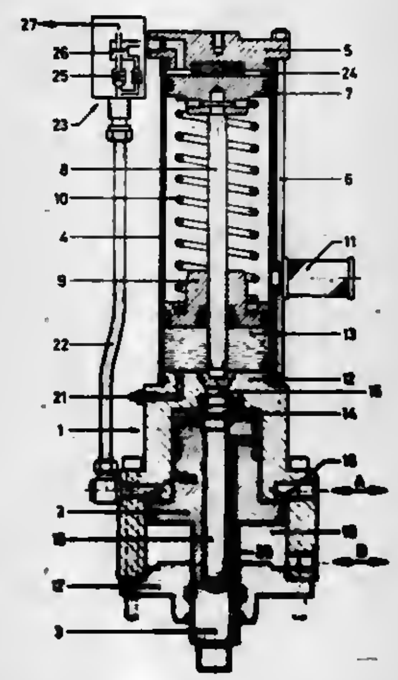

1. Boosted hydro-pneumatic drive having a rapid traverse and a power stroke for driving punching tools comprising

a cylinder housing having a first section and a second section separated by a fixed partition;

a working piston slidably mounted in an annular space in said first section, said working piston including a central bore and having an attached piston rod extending out of said housing;

connections provided to said annular space in said first section to selectively apply compressed air pressure to opposite surfaces of said working piston;

said second section having a disc piston and an annular piston slidably mounted therein, said disc piston having a plunger portion extending from one side thereof and adapted to slide into said central bore of said working piston upon application of pressure to the other side of said disc piston, and said annular piston being located at an intermediate position between said disc piston and said partition;

an oil reservoir formed between said annular piston and said partition and having a fluid connection with said central bore;

a compression spring mounted between said disc piston and said annular piston to assist in rapid traverse movement of said working piston and in the return stroke of said disc piston;

said second section having an opening in said housing to the atmosphere and being located to provide atmospheric pressure in said second section throughout the drive cycle;

said second section including a cover portion at the end remote from said partition, said cover and said disc piston having a working space formed therebetween;

means providing a compressed air connection between said working space and that part of said annular space adjacent said partition; and

said connecting means including a valve arrangement that is actuable during the power stroke to cause movement of said disc piston whereby said plunger portion slides into said central bore, and is further actuable to allow the return stroke of said disc piston.

4,300,352

HYDRAULIC PRESSURE INTEGRATOR

Henry L. Williams, Oklahoma City, Okla., assignor to The Geolograph Company, Oklahoma City, Okla.

Filed Sep. 10, 1979, Ser. No. 73,707

Int. Cl.³ B60T *7/00*

U.S. Cl. 60—567 **1 Claim**

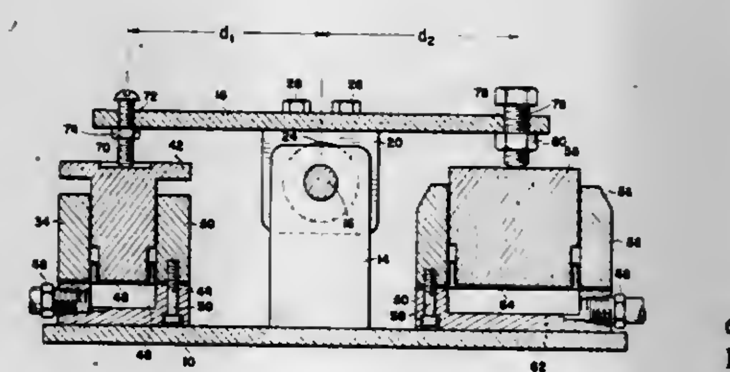

1. A hydraulic pressure integrator comprising a base plate, an overhead pivot plate mounted above said base plate for pivotal movement about a horizontal pivot axis, a plurality of vertically oriented input pressure cylinders substantially equal in size mounted on said base plate and below said pivot plate, each input cylinder having an input piston slidably mounted therein, means for supplying an input pressure signal to each input cylinder allowing each input piston to rise upon input of pressure for contacting said pivot plate at a predetermined distance from said pivot axis, a single output cylinder mounted on said base plate on an opposite side of said pivot axis from said input cylinders, said output cylinder having an output piston slidably mounted therein, means for transmitting an output pressure signal produced by said output piston, said output piston contacting said pivot plate at a given distance from said pivot axis, said output piston being depressed by pivotal action of said pivot plate as a result of forces applied thereto from said input pistons to produce an output pressure signal from said output piston, said output cylinder having a large enough size in comparison to said input cylinders so that the cross-sectional area of said output piston times its given distance from said pivotal axis is equal to the total combined product of the cross-sectional areas of said input pistons times their respective predetermined distances from said pivot axis, wherein each input piston contacts said pivot plate at the same predetermined distance from said pivot axis, wherein there are four such input cylinders having input pistons of equal effective cross-sectional areas, wherein said given distance is equal to said predetermined distance and wherein the effective cross-sectional area of the output piston is equal to four times the effective cross-sectional area of each of the input pistons.

4,300,353

VEHICLE PROPULSION SYSTEM

Stuart L. Ridgway, 537 Ninth St., Santa Monica, Calif. 90402

Continuation of Ser. No. 598,888, Jul. 24, 1975, abandoned. This application Jun. 6, 1977, Ser. No. 803,869

Int. Cl.³ F01K *23/06*

U.S. Cl. 60—618 **29 Claims**

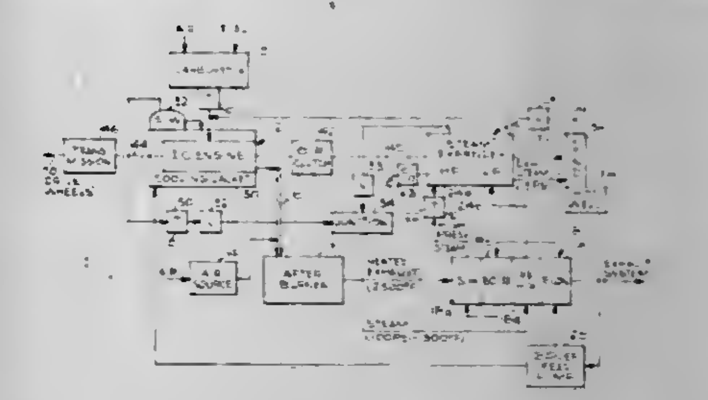

1. A vehicle propulsion system which minimizes pollutant emissions but provides good fuel economy over typical vehicle load and speed ranges, said system comprising:

an internal combustion engine, including means for providing the cylinders thereof with a fuel-air mixture in which the fuel-air ratio is substantially greater than the stoichiometric fuel-air ratio, in order to produce a combusted exhaust gas from said internal combustion engine which is low in oxides of nitrogen content and rich in combustibles content, said internal combustion engine having a displacement substantially less than would be necessary for a pure internal combustion engine having a power output equivalent to the power output of said propulsion system, said internal combustion engine further being operated at relatively high cylinder pressures;

means for adding air to the exhaust gas from said internal combustion engine;

combustion means coupled to receive the air and exhaust gas to complete the combustion of the exhaust gas;

a steam generator coupled in heat exchange relationship with the combusted exhaust gas from said combustion means;

a steam expander coupled to receive steam from said steam generator and to thereby generate mechanical power;

means for continuously mechanically coupling said internal combustion engine and said steam expander so that both act together to propel the vehicle under steady-state load requirements; and

a first control means to operate said internal combustion engine at a power level substantially less than the steady-state system load power requirements but at a power level nearer that required for maximum fuel efficiency in the internal combustion engine, said steam expander providing the remaining steady-state system load power requirements, whereby the fuel consumption of said system is substantially less than that of the pure internal combustion engine of equivalent power.

4,300,354
SUSPENSION SYSTEM FOR A LOW TEMPERATURE TANK

Wolfgang Buchs, Valley; Martin Müeller, Siegertsbrunn; Werner Malburg, Neubiberg, and Albert Seidel, Siegertsbrunn, all of Fed. Rep. of Germany, assignors to Messerschmitt-Boelkow-Blohm Gesellschaft mit beschraenkter Haftung, Munich, Fed. Rep. of Germany

Filed Jan. 30, 1980, Ser. No. 116,888
Claims priority, application Fed. Rep. of Germany, Feb. 1, 1979, 2903787
Int. Cl.³ F17C *7/02*
U.S. Cl. 62—45 14 Claims

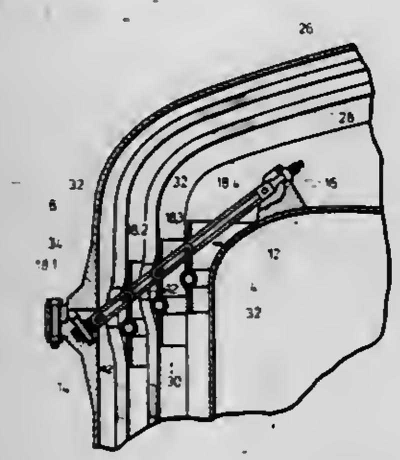

1. A suspension system for a low temperature tank, comprising outer shell means, a plurality of strap means of fiber compound materials, said strap means having inner and outer strap ends, first anchoring means operatively connecting said inner strap ends to said tank, second anchoring means operatively connecting said outer strap ends to said outer shell means, each of said strap means comprising a plurality of strap elements, at least certain of said strap elements being made of different fiber materials having different thermal characteristics, said strap elements being arranged so that the strap element closest to said tank is made of a fiber material having the lowest heat expansion coefficient relative to the fiber material of the strap elements further away from the tank, and means operatively securing in series said strap elements of a strap means, whereby said strap elements of a strap means form a row or sequence, one following another.

4,300,355
IN-LINE LIN SLUSH MAKING FOR CONCRETE COOLING

Thomas E. McWhorter, Whitehall; Haunani Kekuna, Macungie; Brian L. Gabel, Northampton, and Eric C. Osmundson, Bethlehem, all of Pa., assignors to Air Products and Chemicals, Inc., Allentown, Pa.

Filed Jul. 3, 1980, Ser. No. 165,816
Int. Cl.³ F17C *11/00*
U.S. Cl. 62—48 10 Claims

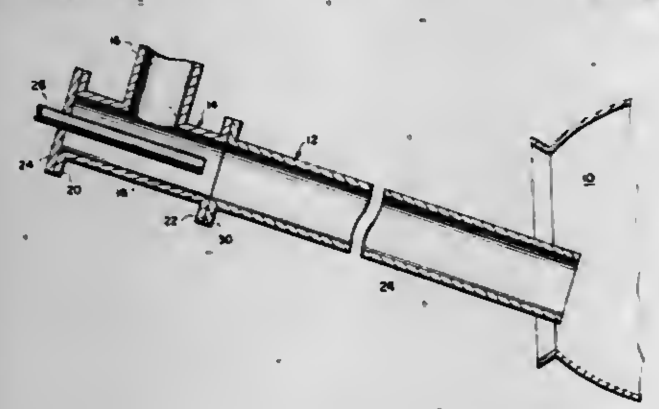

1. A process for producing a flowable liquid-solid mixture comprising a continuous liquid phase and a discontinuous solid phase, the solid being discrete, frozen particles of the liquid, which process comprises flowing a stream of the liquid through a closed conduit, introducing a liquid cryogen into the flowing liquid stream so as to flow cocurrently therewith, whereby the liquid-solid mixture is formed, and discharging the mixture from the conduit, the temperature of the liquid stream into which the cryogen is introduced being established within the range from about 2° F. above the freezing point of the liquid to about 10° F. above the freezing point of the liquid, the contact time between introduction of the cryogen and discharge of the mixture being maintained from about 0.001 to about 10 seconds, the superficial velocity of the flowing liquid being at least about 1.5 feet per second, and the weight ratio of cryogen to liquid being maintained from about 0.05:1 to about 2:1.

4,300,356
REFRIGERATION STORAGE ASSEMBLY

Frank Notaro, Amherst; Arun Acharya, East Amherst, and Kenneth C. Kather, Kenmore, all of N.Y., assignors to Union Carbide Corporation, New York, N.Y.

Filed Nov. 21, 1979, Ser. No. 96,408
Int. Cl.³ F17C *7/02*
U.S. Cl. 62—50 19 Claims

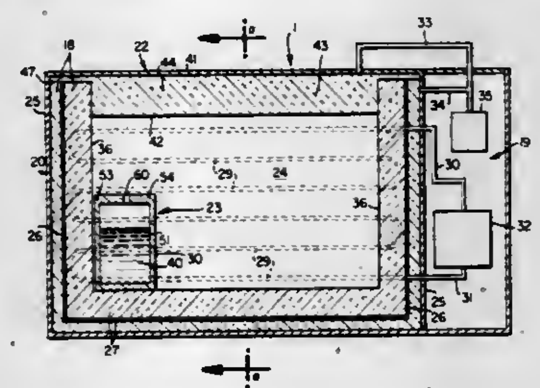

1. A refrigeration storage assembly comprising:
(A) a storage container comprising:
(i) an inner shell forming an enclosed volume having means for providing access to said enclosed volume;
(ii) an outer shell substantially coextensive with and spaced from said inner shell arranged and constructed with respect to said inner shell so as to form a first evacuable space therebetween;
(iii) insulation material disposed within said first evacuable space;
(iv) a highly thermally conductive shield disposed in said insulation material generally coextensive with and transversely spaced from said inner shell and said outer shell wherein the ratio of the distance from said shield to said outer shell D_0 to the distance from said shield to said inner shell Di is from about 1:10 to 1:1;
(B) means for cooling said shield to temperature about 160° K. to 200° K. including:
(i) mechanical refrigeration means external to said storage container (A);
(C) a vessel located within said storage container (A) for holding a cryogenic liquid having a boiling point below 90° K. at one standard atmosphere being arranged and constructed for restricted vapor flow communication with the inner shell enclosed volume (A)(i);
(D) means for evaporating cryogenic liquid in said vessel (C) to form vapor for flow into said inner shell enclosed volume (A)(i) in an amount sufficient to maintain the temperature of said inner shell enclosed volume (A)(i) intermediate to the temperature of said cryogenic liquid and the temperature of said shield (A)(iv).

4,300,357
BY-PASS VALVE FOR AUTOMOTIVE AIR CONDITIONING SYSTEM

Henry Jacyno, Franklin, Wis., assignor to The Singer Company, Stamford, Conn.

Filed May 7, 1979, Ser. No. 36,362
Int. Cl.³ B60H *3/04*
U.S. Cl. 62—239 9 Claims

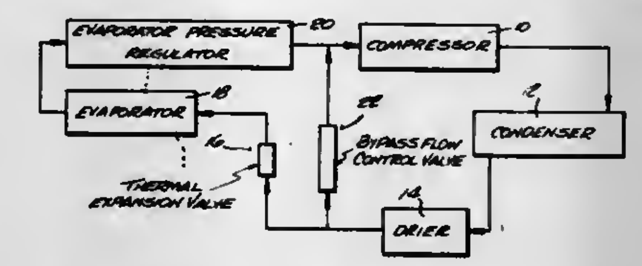

1. In an automotive air conditioning system of the type having a thermostatic expansion valve regulating flow from a compressor to an evaporator connected to the compressor inlet and having a by-pass from the valve inlet to the compressor inlet, the by-pass being controlled by a check valve which opens in response to a predetermined pressure differential between the by-pass inlet and outlet, the improvement comprising a shut-off valve in the by-pass operative to substantially close the by-pass in response to a predetermined high pressure differential between the by-pass inlet and outlet.

4,300,358
FLAT WALL TYPE REFRIGERATED AND CHILLED OPEN DISPLAY CASE

Kazuhiko Hinn, and Masami Mizutani, both of Kawasaki, Japan, assignors to Fuji Electric Co., Ltd., Kanagawa, Japan

Filed May 14, 1980, Ser. No. 149,687
Claims priority, application Japan, May 15, 1979, 54-59530
Int. Cl.³ A47F *3/04;* F25D *21/10*
U.S. Cl. 62—256 1 Claim

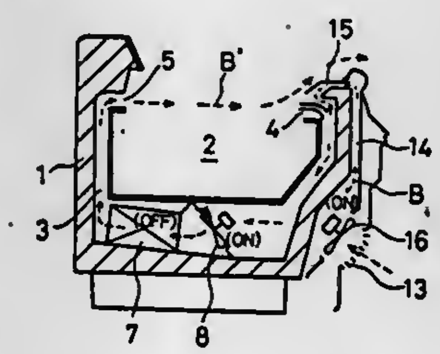

1. In a flat wall type refrigerated and chilled open display case of a type having a case opened at its upper side and having therein a goods displaying cell; an air circulation duct having a cold air curtain outlet and a cold air curtain inlet provided at the front and rear sides of said case and opposing to each other across the opened upper region of said case; and a cooler and a blower disposed in said air circulation passage such that cold air is blown out from said cold air curtain outlet toward said cold air curtain inlet so as to form a cold air curtain covering the opened upper region of said case during chilling operation; an improvement which comprises that said blower disposed in said air circulation passage is reversible and characterized by comprising: a defrosting air duct disposed in said case, said defrosting air duct having an ambient air inlet opened to the ambient air and an ambient air outlet opened to confront said cold air curtain outlet; and an ambient air blower disposed in said defrosting air duct; whereby, in the defrosting operation, said blower in said air circulation passage is reversed and said ambient air blower is operated to forcibly introduce the ambient air into said air circulation duct through said defrosting air duct and said cold air curtain outlet, thereby to effect a defrosting on said cooler, while the air after the defrosting is discharged through said cold air curtain inlet to the opened upper region of said case thereby to form an air curtain which prevents the ambient air of high temperature from coming into said display cell.

4,300,359
COLD PLATE SYSTEM FOR ICE DISPENSER

Robert M. Koeneman, Elmwood Park, and Albert L. Schafer, Chicago, both of Ill., assignors to Remcor Products Company, Franklin Park, Ill.

Filed Aug. 9, 1979, Ser. No. 65,372
Int. Cl.³ F25D *3/02;* F25C *5/18;* B67D *5/62*
U.S. Cl. 62—379 9 Claims

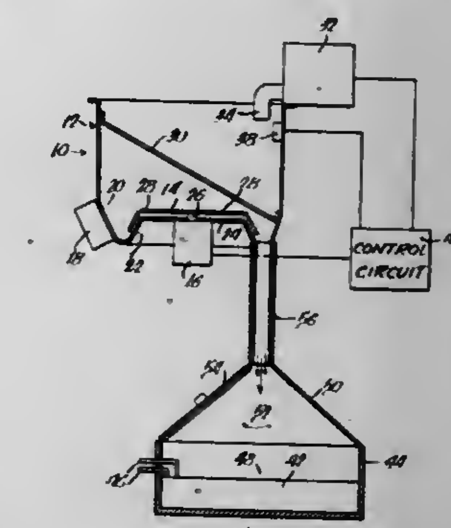

1. In combination with an ice dispenser of a type having a hopper for storage of a mass of small particles of ice and means for dispensing ice from said hopper, a container for holding a quantity of ice, a cold plate in said container, and means extending between said hopper and said container for automatically conveying ice from said hopper to said container to maintain a supply of ice in said container in contact with said cold plate, wherein said ice dispenser includes an agitator in said hopper for maintaining the mass of ice in free flowing form and for facilitating entry of ice into said conduit for gravitation to said container.

4,300,360
SMALL-SIZE HERMETIC HELIUM 3 REFRIGERATION STAGE

Gerald Chanin, Verrieres le Buisson, and Jean-Pierre Torre, Herblay, both of France, assignors to Agence Nationale de Valorisation de la Recherche (ANVAR), Neuilly sur Seine, France

Filed Feb. 19, 1980, Ser. No. 122,030
Claims priority, application France, Feb. 23, 1979, 79 04737
Int. Cl.³ F25B *19/00*
U.S. Cl. 62—514 R 11 Claims

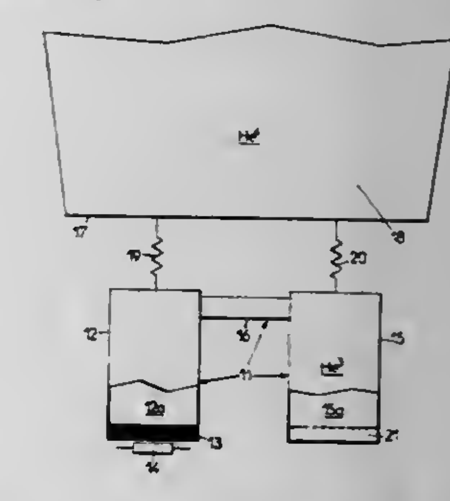

1. A helium 3 cyrostat, comprising a fluid-tight metallic

enclosure containing a charge of helium 3, at a pressure which is high at the ambient temperature, said enclosure including two receptacles and a duct of very low thermal conductivity communicatively connecting said receptacles to each other; a mass of a body able to adsorb the entire volume of helium 3 contained in the enclosure, said mass being provided in one of said receptacles; means for heating said mass to a temperature at which the desorption of helium 3 in said one receptacle is substantially complete with attendant condensation of helium 3 in the other of said receptacles; a helium 4 cooler having a wall; and means for intermittently establishing thermal contact between said receptacles and said wall.

4,300,361
ARTICULATED COUPLING
Hans Lindenthal, Heidenheim-Mergelstetten; Waldemar Armasow, Heidenheim, and Reinhard Bretzger, Gerstetten, all of Fed. Rep. of Germany, assignors to Voith Transmit GmbH, Fed. Rep. of Germany
Filed Jun. 4, 1979, Ser. No. 45,382
Claims priority, application Fed. Rep. of Germany, Jun. 10, 1978, 2825556; Jan. 20, 1979, 2902226
Int. Cl.³ F16D *3/76*
U.S. Cl. 64—17 R **15 Claims**

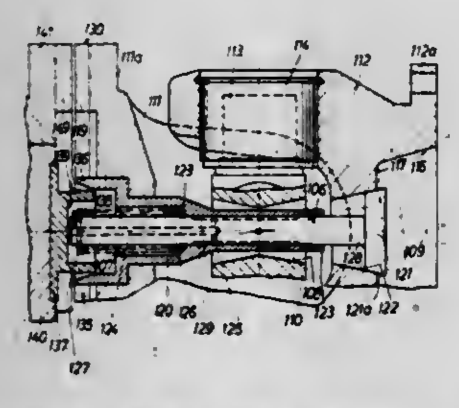

1. An articulated coupling which is used to connect two rotatable machine parts, or the like, said coupling comprising;
two coupling halves coupled together and each being connectable with a respective machine part; at least one of said coupling halves being able to pivot, tilt or deflect from its orientation at which it may be connected to its respective machine part;
said coupling having an axis of rotation about which said coupling rotates along with the machine parts to which said coupling is connected;
a component passing between both said coupling halves and extending generally along said coupling axis for engaging said one coupling half for blocking said one coupling half from pivoting, tilting or deflecting; said component being yieldable in the axial direction of said coupling for selectively engaging said one coupling half upon said one coupling half being separate from the respective machine part for preventing pivoting, tilting or deflecting, and for selectively permitting said one coupling half to pivot, tilt or deflect upon said one coupling half being connected to the respective machine part;
said component comprising:
an axially displaceable rod, supported by said one coupling half and being axially shiftable with respect to both of said one and the second said coupling half; said rod extending beyond said one coupling half in a manner such that when said one coupling half is connected to the respective machine part, said rod is shifted axially toward said second coupling half;
biasing means for biasing said rod toward the respective machine part for said one coupling half;
a cooperating surface on said second coupling half and facing for engaging a holding disc on said rod;
a holding disc connected to said rod for being biased, by the biasing of said rod, into engagement with said cooperating surface for thereupon preventing pivoting, tilting or deflecting of said rod, thereby to block pivoting, tilting or deflecting of said one coupling half.

4,300,362
ARTICULATION FOR MANIPULATOR ARM
Maurice A. Lande, Paris, and Roger J. P. David, Ballancourt, both of France, assignors to Association des Ouvriers en Instruments de Precision, Paris, France
Filed Sep. 19, 1979, Ser. No. 76,812
Claims priority, application France, Sep. 20, 1978, 78 26928; Aug. 2, 1979, 79 19845
Int. Cl.³ F16D *3/26*
U.S. Cl. 64—17 R **5 Claims**

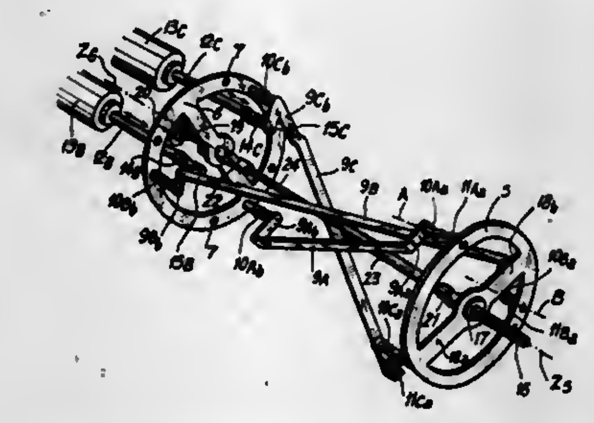

1. An articulation for a manipulator arm comprising:
first and second spaced apart flat supporting elements;
three connecting rods extending between said first and second elements;
respective first universal joints each connecting one end of a respective one of said rods to said first supporting element, said first joints being spaced apart on said first supporting element;
respective second universal joints connecting the opposite ends of said rods respectively to said second supporting element at spaced apart location thereon whereby said rods and said universal joints link said supporting elements together, said second supporting element being formed with apertures and two of said rods at said opposite ends thereof having elbow-shaped extensions; and
a pair of control rods adapted to be connected to respective linear drives and having ends provided with respective third universal joints each connected through a respective one of said apertures to a respective one of said elbow-shaped extensions whereby said first supporting element is displaced relative to said second supporting element upon linear movement of said control rods.

4,300,363
TORSIONAL VIBRATION DAMPER FOR A FRICTION CLUTCH
Thomas P. Mathues, Miamisburg, Ohio, assignor to General Motors Corporation, Detroit, Mich.
Filed Dec. 3, 1979, Ser. No. 99,486
Int. Cl.³ F16D *3/14*
U.S. Cl. 64—27 NM **4 Claims**

1. A torsional vibration damper comprising an input member; an output member; an input disc drivingly connected to said input member; an output disc drivingly connected to said output member; cam slot means formed in each of said input disc and said output disc; band support means operatively connected between said input and output discs and including shoulder means disposed in said cam slots; and elastomeric band means operatively connected to said band support means for transmitting a force between said disc members through said cam slot means and for permitting relative rotation between said input and output disc means whereby relative rotational movement of said cam slot means results in radial movement of said band support means relative to said input and output discs accompanied by an increase in the force transmitted by said elastomeric band means when said elastomeric band support means move radially outward relative to said disc members.

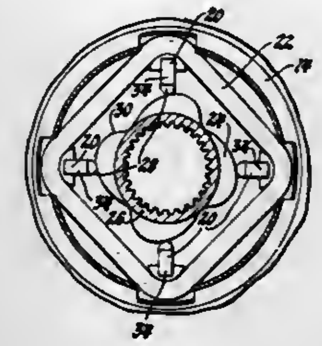

4,300,364
OVERLOAD COUPLINGS
Ary van der Lely, Maasland, and Cornelis J. G. Bom, Rozenburg, both of Netherlands, assignors to C. van der Lely N.V., Maasland, Netherlands
Division of Ser. No. 872,545, Jan. 26, 1978, Pat. No. 4,199,963. This application Sep. 11, 1979, Ser. No. 74,546
Claims priority, application Netherlands, Feb. 1, 1977, 7701012
Int. Cl.³ F16D *3/56*
U.S. Cl. 64—28 R **12 Claims**

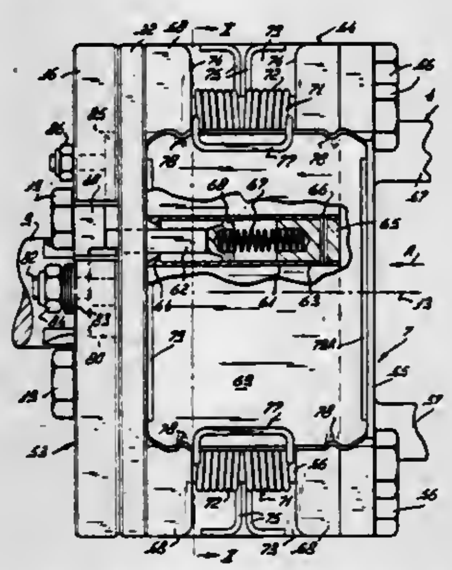

1. An overload coupling comprising a first member and a second member that are drivenly interconnected by frangible means for rotation together about a common axis during normal operation, said frangible means comprising at least one frangible pin that interconnects the coupling members, said pin being fitted in cutting means positioned to sever the pin upon overload and permit relative rotation between said members, means urging said frangible means into said cutting means to re-establish a driving interconnection between said coupling members, said cutting means comprising an aperture in said first member that receives a severable portion of the pin and said portion establishing driving interconnection between said members, means adjusting the size of said aperture, whereby different pins of different diameter are accommodated in said aperture.

4,300,365
KNITTING METHOD
Frank Robinson, Breaston, England, assignor to Courtaulds Limited, London, England
Filed Nov. 7, 1979, Ser. No. 91,896
Claims priority, application United Kingdom, Nov. 20, 1978, 45318/78
Int. Cl.³ A41B *9/06*
U.S. Cl. 66—176 **1 Claim**

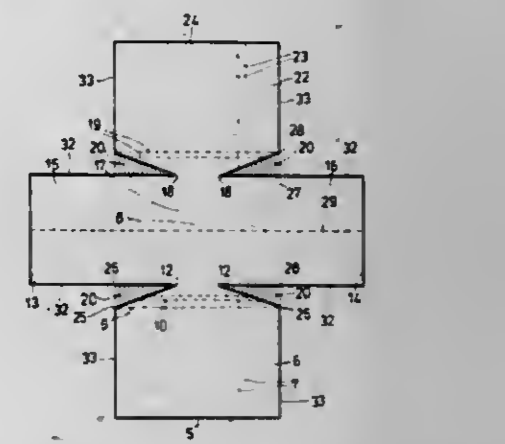

1. A method of knitting a blank for a sleeved garment, said method comprising the following steps:
(1) starting knitting along a waist section of the garment blank and knitting a body panel having wales extending towards the neck region of the garment blank,
(2) continuing knitting said body panel up to the arm pit level,
(3) thereafter continuing knitting said body panel, using courses which become shorter towards the neck region of the garment blank, until said body panel is completed,
(4) knitting a unitary piece of sleeve and shoulder fabric for the garment blank having courses extending from cuff to cuff of the garment blank and having in a central shoulder region wales which are extensions of wales of said body panel,
(5) commencing knitting a further body panel having wales extending away from the neck region of the garment blank which are extensions of wales of said central shoulder region of the sleeve and shoulder fabric,
(6) knitting increasingly longer courses in said further body panel as knitting progresses away from the neck region of the garment blank to the arm pit level, whereby
(7) the outer parts of the courses in the sleeve and shoulder fabric are inclined with respect to the courses in the body panels, and
(8) completing knitting of said further body panel from the arm pit level to the waist.

4,300,366
OVERHEAD CONVEYOR SYSTEM FOR GARMENT PROCESSING CABINET
Barrie G. Barrett, Ashford, England, assignor to C. F. Doyle Limited, Faversham, England
Filed Mar. 6, 1980, Ser. No. 127,763
Claims priority, application United Kingdom, Mar. 13, 1979, 08867/79
Int. Cl.³ D06F *35/00*
U.S. Cl. 68—3 R **15 Claims**

1. Garment treatment apparatus comprising:
at least one treatment cabinet,
an entrance to said cabinet for garments held on garment supports,
an exit from said cabinet for garments held on said garment supports,
at least one conveyor for moving garments held on said supports into, through, and out of said cabinet,
means for positioning and orienting said supports so that a garment on a support has its narrowest dimension substan-

tially transverse to the direction of entry into said cabinet through said entrance, and

means for changing the direction of movement of a support without rotating said support whilst said support is within said cabinet, said direction change means comprising guides defining the path of the garment supports and support blocks carrying said garment supports which are movable along said guides, said blocks having pairs of opposed faces which engage the guides so that said blocks

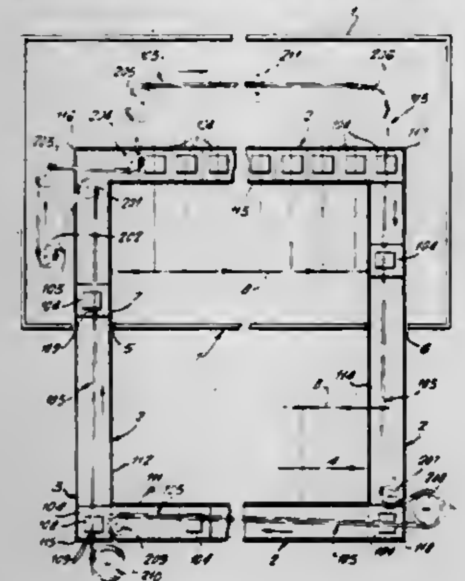

are non-rotatably moved during movement lengthwise of the guides, the guides having corners where they change direction and the movement of a block from a corner providing the change in direction of movement of the garment support without rotation of the block, another opposed pair of faces of the block then being engaged between said guides, whereby a garment on a support may be moved through at least part of said cabinet with its said narrowest dimension aligned with the longitudinal axis of that said part of said cabinet.

4,300,367
APPARATUS FOR TREATMENT OF FIBERS WITH OZONE-STEAM MIXTURES
Walter J. Thorsen, Albany, Calif., assignor to The United States of America as represented by the Secretary of the Department of Agriculture, Washington, D.C.
Continuation-in-part of Ser. No. 88,674, Oct. 26, 1979, abandoned, which is a division of Ser. No. 15,503, Feb. 23, 1979, Pat. No. 4,214,330. This application Dec. 24, 1980, Ser. No. 219,569
Int. Cl.³ D06B *3/30*
U.S. Cl. 68—5 D **8 Claims**

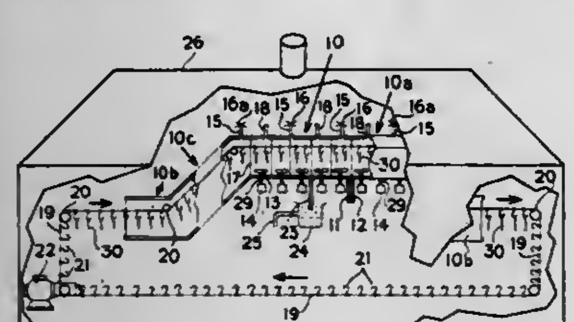

1. An apparatus for treating fibers with an ozone-steam mixture, which comprises

(a) a chamber having a substantially horizontal open end section, and a horizontal middle section elevated at least 15 cm above said end section, said middle section having a top wall which is sloped in both directions from a center line, the magnitude of slope being sufficient to convey condensed gases down the side walls of said middle section and said middle section having a length sufficient to provide a residence time within said middle section for fibers conveyed therein to be treated by the ozone-steam mixture prior to exiting said middle section;

(b) means for introducing ozone into the central longitudinal part of said horizontal middle section of said chamber; and separate means for introducing steam into the central longitudinal part of said horizontal middle section to create an ozone-steam mixture within said horizontal middle section, said means for introducing ozone and for introducing steam located within said horizontal middle section such that in conjunction with the elevation of said middle section said ozone-steam mixture is substantially confined therein; and

(c) means for moving the fibers through said chamber.

4,300,368
HANDCUFF ASSEMBLY
David M. Sullivan, 35 S. Evergreen, Memphis, Tenn. 38104
Filed May 5, 1980, Ser. No. 146,454
Int. Cl.³ E05B *75/00*
U.S. Cl. 70—16 **12 Claims**

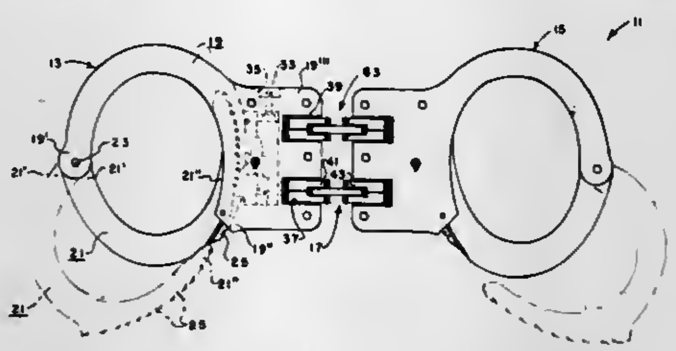

1. Handcuff assembly for selectively locking a prisoner's wrists together, said handcuff assembly comprising:

(a) a first wrist encircling means for selectively encircling one of the prisoner's wrists;

(b) a second wrist encircling means for selectively encirclying the other of the prisoner's wrists; and

(c) tamper-proof connecting means for pivotally connecting said first and second wrist encircling means to one another, said connecting means including a first elongated body means having a first end for being pivotally attached to said first wrist encircling means and having a second end, said connecting means including a second elongated body means having a first end for being pivotally attached to said second wrist encircling means and having a second end, said connecting means including a coupling means for pivotally coupling said second ends of said first and second body means to one another, said coupling means including a pivot pin, said pivot pin including first and second ends and including a midportion, said second ends of said body means having apertures for pivotally receiving said ends of said pivot pin being larger in cross sectional area than at least a portion of said apertures in said second ends of said body means.

4,300,369
PROTECTIVE ENCLOSURE FOR A PADLOCK
Kenneth H. Besecker, 191 Vistawood La., Marietta, Ga. 30066
Filed Sep. 7, 1978, Ser. No. 940,438
Int. Cl.³ E05B *67/38*
U.S. Cl. 70—54 **2 Claims**

1. A protective enclosure for use with an existing padlock or the like, comprising:

means for defining a receptacle having an internal chamber for receiving the body of a padlock, said receptacle having means to permit a latching portion of the padlock to extend out of said internal chamber;

said receptacle having an opening for gaining access to said chamber so as to unlock said padlock; and

said receptacle having means to define a tortuous path through said opening and into said chamber operative to block line-of-sight access to the keyhole of the padlock

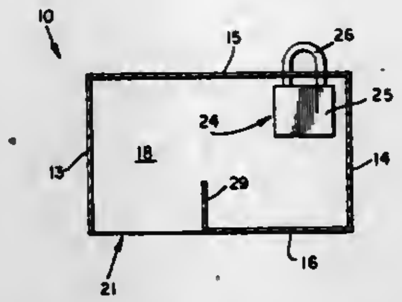

within said chamber while leaving the keyhole unobstructed for manual access.

4,300,370
SECURING DEVICE COMPRISING PADLOCK AND ANCHORED HOUSING
Donald J. Kaiser; Albert Behar, and William A. Krupicka, all of Charlotte, N.C., assignors to Scoville Inc., Waterbury, Conn.
Filed Apr. 3, 1980, Ser. No. 136,794
Int. Cl.³ E05B *67/38*
U.S. Cl. 70—54 **5 Claims**

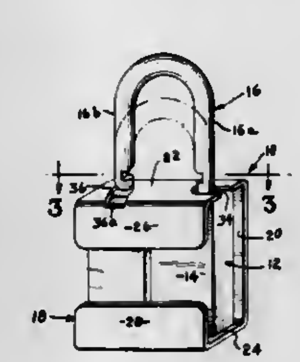

1. A securing device comprising:

(a) a conventional padlock having a body of generally rectangular solid shape and a U-shaped shackle adapted, when the padlock is not locked, to raise longitudinally from the body and present an attached leg and a distal leg, the shackle pivoting about the attached leg, all in the conventional manner, and a keyhole at the other end of the body from the shackle;

(b) a C-shaped housing of rigid sheet material comprising a back panel, top and bottom panels and shortened upper and lower front panels, the panels defining a pocket adapted to receive the body of the padlock from a lateral direction, the top panel being laterally notched to receive the attached leg and having an opening to permit the distal leg to pass through in the locking operation, and having an opening in the bottom panel to expose the keyhole; and

(c) means to fasten the housing to a stationary member.

4,300,371
EQUIPMENT SECURITY DEVICE
Dale L. Herwick, 3637 Berryman Ave., Los Angeles, Calif. 90066, and Michael W. Adams, 19803 Hemmingway St., Canoga Park, Calif. 91306
Filed Mar. 18, 1980, Ser. No. 131,289
Int. Cl.³ E05B *73/00*
U.S. Cl. 70—58 **18 Claims**

1. A security device for attachment of a machine frame to a supporting furniture top and including;

an assembly comprised of a planar receptacle member with a central opening therethrough and a concentric hole pattern intermediate said opening and a periphery thereof, a planar cover member with an imperforate center portion and a concentric hole pattern intermediate said portion and a periphery thereof, and said hole patterns of the two members being complementary for the reception of fasteners engaged through the furniture top from the receptacle member and into the cover member,

a lock unit and plate assembly comprised of a lock barrel engageable through the central opening in the receptacle member and a plate positioned thereby in coextensive

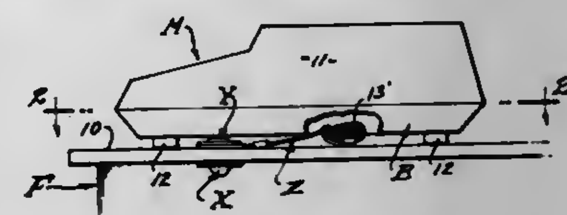

spaced opposition to the receptacle member and overlying the fasteners engaged therethrough, said lock barrel having key operated means to releasably engage the receptacle member,

the lock unit barrel being engaged through means connected to the machine frame.

4,300,372
DOOR LOCKING WITH MOVABLE CODE ELEMENTS
Richard Nienstedt, Wiesenstr. 10, 2808 Syke, Fed. Rep. of Germany
Division of Ser. No. 857,286, Dec. 5, 1977. This application Jul. 27, 1979, Ser. No. 61,185
Claims priority, application Fed. Rep. of Germany, Jan. 24, 1977, 2702759
Int. Cl.³ E05B *37/02*
U.S. Cl. 70—213 **4 Claims**

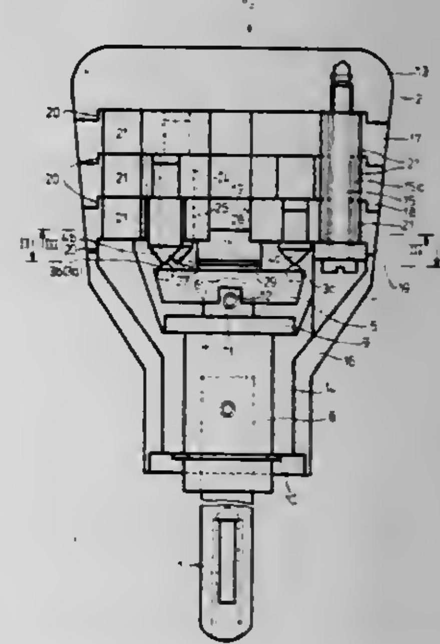

1. In door locking apparatus operated by at least two adjustable movable code elements supporting respective cam follower devices engaging a cam device nonrotatably connected to a closing body and having a swash plate carrying at least two dome-shaped cams the improvement comprising,

separate cam elements embedded in the material of a carrier body and protruding above the surface of said carrier body.

4,300,373
WELL CHRISTMAS TREE GUARD APPARATUS
Walter M. Camos, 147 Industrial Pkwy., Lafayette, La. 70508, and William L. Doize, P.O. Box 52429, Lafayette, La. 70501
Filed Jan. 29, 1979, Ser. No. 7,355
Int. Cl.³ F16B *41/00*
U.S. Cl. 70—232 **10 Claims**

1. An oil/gas well Christmas tree guard apparatus comprising:

a. a shroud comprising a pair of shroud halves, each of said shroud halves having a sidewall portion and an attached top portion;

b. hinge means for pivotally attaching said pair of shroud halves, said shroud halves being pivotally movable from a closed protection position about a flanged bolted connection of the Christmas tree to an open position for removal from the flanged bolted connection portion of the Christmas tree, said shroud halves forming a protective enclosure about the flanged bolted connection in said closed position, so as to prevent removal of the bolts therefrom and further forming, in said closed position, a central opening in said top portion of said shroud through which

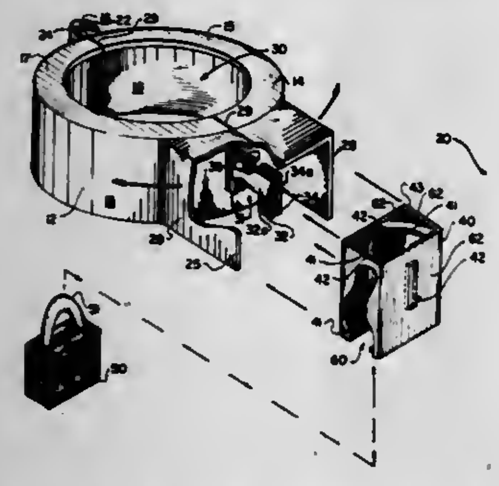

opening a portion of the Christmas tree at the bolted connection can pass;

c. a pair of latches securing said pair of shroud halves in said closed position, at least one of said latches being provided with a lock carriage, a conventional padlock being affixable to said latches at said lock carriage, and so secured, preventing a release of said latches from said closed position; and

d. a lock housing at least partially surrounding during locked operation said lock carriage and an affixed padlock, said lock housing fitting about said carriage and the padlock while affixed to said lock carriage; yet being removable from said lock carriage with the padlock.

4,300,374

KEY RETAINING CYLINDER FOR A LOCK

Richard O. Mulich, Burbank, and William R. Hunter, Los Angeles, both of Calif., assignors to Tre Corporation, Beverly Hills, Calif.

Filed Jul. 30, 1979, Ser. No. 61,678

Int. Cl.³ E05B *11/00, 27/00, 65/06*

U.S. Cl. 70—389 **14 Claims**

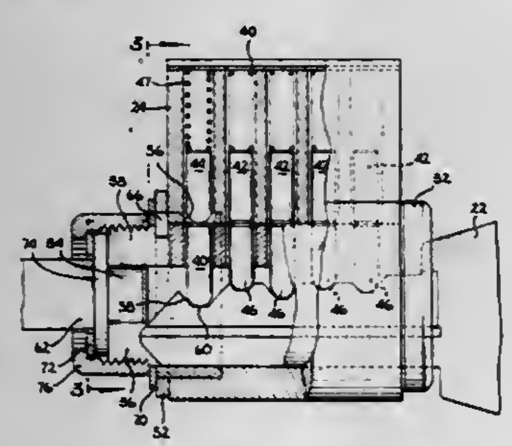

13. A key retaining cylinder lock for operating a dead bolt mechanism comprising:

a cylinder assembly having a plurality of spring-loaded pins therein;

a plug within said cylinder, said plug having a keyway therein for receiving a key, and having a plurality of combinational pins cooperatively disposed with respect to said keyway and said spring-loaded pins in said cylinder when said plug is in a first angular position with respect to said cylinder to position all of said pins to allow rotation of said plug away from a first plug position toward a second plug position for extending a deadbolt and in an opposite direction toward a third plug position for withdrawing a deadbolt on insertion of a matching key having a plurality of combinational notches therein;

a tail piece means coupled to said plug through a first lost motion drive, said tail piece means being a means for engaging and operating the dead bolt mechanism between the extended and retracted positions responsive to rotation of said plug; and

an indexing ring, said indexing ring fitting within an annular relief in the bore of said cylinder so as to encircle said plug in the region of one combinational pin, said ring having a hole therein for the free passage of said combinational pin when said hole is aligned with said combinational pin, said indexing ring being coupled to said plug through a second lost motion drive, said first and second lost motion drives having approximately the same lost motion, said indexing member being in a position restricting movement of a combinational pin out of a combinational notch in the matching key when said plug is rotated to said first position from said second position to prevent removal of the key from said plug and being in a position not restricting movement of said combinational pin out of the combinational notch by allowing said combinational pin to pass into said hole in said indexing ring when said plug is rotated to said first position from said third position.

4,300,375

TOOL PACK FOR CONTAINER BODY MAKER

Edward G. Maeder, Minnetonka County, and Harry P. Proctor, Hennepin County, both of Minn., assignors to National Can Corporation, Chicago, Ill.

Filed Apr. 4, 1980, Ser. No. 137,533

Int. Cl.³ B21D *22/28*

U.S. Cl. 72—45 **11 Claims**

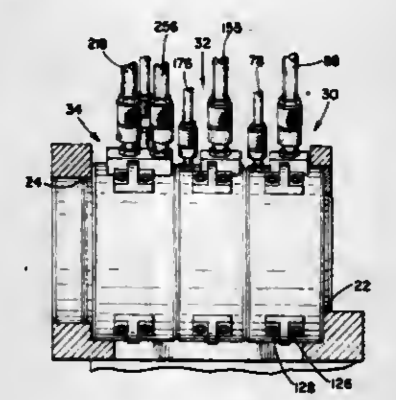

1. In an ironing press having a main frame with a punch reciprocable along a path and having a cavity along said path with first and second recesses at opposite ends of said cavity, first, second and third modular units in said cavity defining a tool pack cooperating with said punch to reduce the wall thickness of a cup on said punch and strip said cup from said punch, said first modular unit including a first support member defining a chamber and having an ironing ring assembly and redraw ring assembly serially arranged in said chamber with a reduced portion of said redraw ring assembly extending from an end surface of said first support member, said reduced portion extending into one of said recesses to position said first modular unit with respect to said path, said first support member having a flat surface opposite said reduced portion extending substantially perpendicular to said path; said second modular unit including a second support member having a reduced peripheral portion of one end thereof, a stripper assembly secured to said support member and an ironing ring assembly in said support member, said reduced peripheral portion being received into the other of said recesses to position said support member with respect to said path said second support member having a flat surface opposite said reduced peripheral portion which extends substantially perpendicular to said path, and a third modular unit including a third support member having a third ironing ring assembly supported therein and having flat surfaces extending substantially perpendicular to said path on opposite ends thereof, said third support member being positioned into said cavity with the respective flat surfaces in extended engagement with the respective flat surfaces of said first and second support members.

7. A lubricant removal ring for use in a drawing and ironing operation comprising a main body having opposed generally parallel surfaces with a circular opening extending through said body between said surfaces for receiving a cup during the drawing and ironing operation, said body having a liquid receiving channel surrounding and exposed to the periphery of said opening, said channel having a minimum radial dimension at one point and having a progressively increasing radial dimension from said one point to a second point, and means defining an outlet extending from said channel to the periphery of said body between said points.

4,300,376

COOLING OF ROLLED METAL PRODUCTS

Stephan H. Wilmotte, Chaudfontaine, Belgium, assignor to Centre de Recherches Metallurgiques-Centrum voor Research in de Metallurgiques, Brussels, Belgium

Filed Sep. 28, 1979, Ser. No. 80,066

Claims priority, application Belgium, Oct. 2, 1978, 870959; Oct. 2, 1979, 879960

Int. Cl.³ B21B *43/00, 45/02*

U.S. Cl. 72—201 **8 Claims**

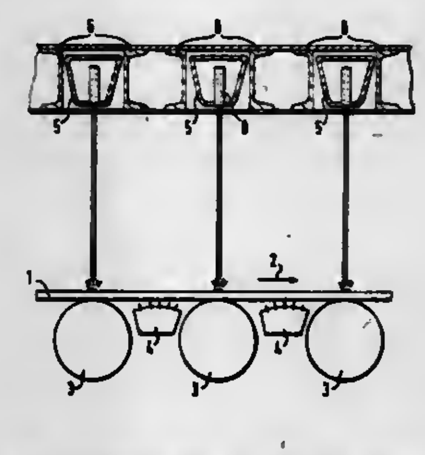

1. A device for continuously cooling a rolled metal product emerging from the last stand of a rolling mill, comprising at least one hollow housing for carrying a liquid coolant, a plurality of substantially vertical cylindrical tubes, each tube having an upper end inside the housing and a lower end outside the housing and a length at least five times its inner diameter, a plurality of lateral conduits through which the liquid coolant enters each tube from the interior of the housing extending through a portion of the tube inside the housing adjacent the upper end of the tube, the length of said portion not exceeding one-third of the length of the tube and the conduits being uniformly spaced over the periphery of at least one cross-section of the tube, the axes of the conduits intersecting the axis of the tube at an angle of inclination thereto of from 20° to 60°, whereby the tube produces a compact jet of liquid coolant which does not include any gaseous constituents and all the molecules of which are moving at the same speed in a given cross-section transverse to the direction of the jet.

4,300,377

DEVICE FOR WRAPPING STRIP PARTLY AROUND WORKING ROLLS OF ROLLING-MILL STAND

Hiromasa Hirata, Yokohama, Japan, assignor to Ishikawajima-Harima Jukogyo Kabushiki Kaisha, Japan

Filed Jun. 24, 1980, Ser. No. 162,623

Claims priority, application Japan, Jun. 28, 1979, 54/81773

Int. Cl.³ B21B *39/16*

U.S. Cl. 72—250 **3 Claims**

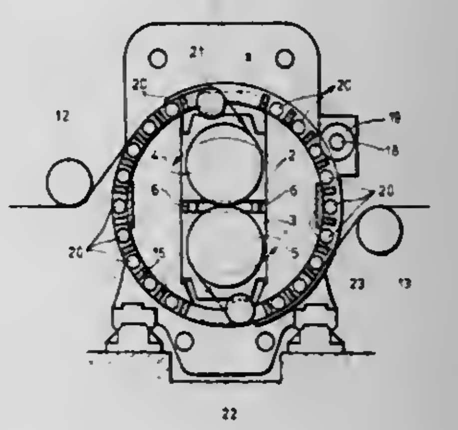

1. A device for wrapping a strip of metal partly around working rolls of a rolling-mill stand comprising

circular rings each having an inner diameter large enough to permit the passage through said circular ring of an upper roll chock and a lower roll chock, said circular rings being rotatably mounted on a housing of said rolling-mill stand,

a plurality of strip guide means extended between circular rings and angularly spaced apart along a circle coaxial with said circular ring, and

deflector rolls disposed upstream and downstream, respectively, of said rolling-mill stand so as to deflect or guide a strip.

4,300,378

METHOD AND APPARATUS FOR FORMING ELONGATED ARTICLES HAVING REDUCED DIAMETER CROSS-SECTIONS

Sinnathamby Thiruvarudchelvan, 45 Hardy Dr., St. Augustine, Trinidad and Tobago

Filed Mar. 8, 1979, Ser. No. 18,836

Int. Cl.³ B21C *23/08, 23/20, 25/02, 27/00*

U.S. Cl. 72—253.1 **25 Claims**

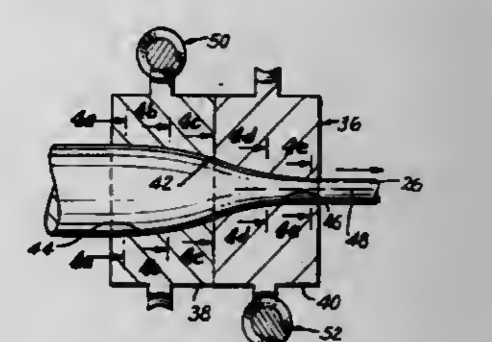

1. A method for forming an elongated article having a reduced diameter circular cross-section comprising the steps of: introducing material into a longitudinally extending cavity of a die apparatus, said cavity being open only at its transverse inlet and outlet ends and closed along its entire longitudinal extent and being defined by an upstream end region having a substantially circular cross-section, a downstream end region having a reduced diameter substantially circular cross-section and a region longitudinally upstream of the downstream end region having a non-circular cross section; and moving the material longitudinally through the die cavity under tension or compression while simultaneously rotating one of the die apparatus

and material around the longitudinal axis of the cavity while imparting a resisting torque to the other of the die apparatus and material to deform the material within the die cavity around the longitudinal axis thereof simultaneously with the material moving longitudinally through the die cavity to facilitate a reduction in circular cross-section therein as the material moves through the cavity.

4,300,379

METHOD OF PRODUCING A COATING ON A CORE

Morris E. Johnson, Batavia, Ill.; William G. Voorhes, East Greenwich, and Dennis L. Breneiser, Jamestown, both of R.I., assignors to Nichols-Homeshield, Inc., Aurora, Ill.

Continuation of Ser. No. 923,204, Jul. 10, 1978, abandoned, which is a continuation-in-part of Ser. No. 709,331, Jul. 28, 1976, abandoned, which is a continuation of Ser. No. 590,849, Jun. 27, 1975, abandoned. This application Aug. 11, 1980, Ser. No. 177,353

Int. Cl.³ B21C *23/22*

U.S. Cl. 72—258 14 Claims

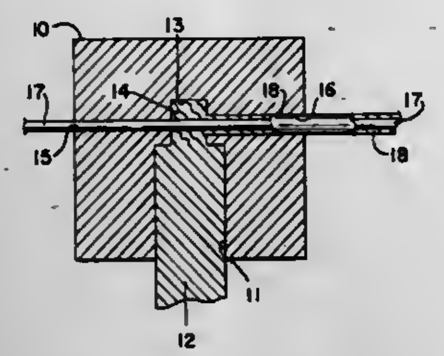

1. The method of forming a metal clad wire for the manufacture of fasteners by passing a ferrous metal wire through a plasticized portion of a nonferrous metal, comprising continuously extruding a nonferrous metal into a die under pressure to form said plasticized portion, passing a ferrous metal wire through said die at substantially a right angle to the direction of the passage of said nonferrous metal and through said plasticized portion, and said portion directly engaging and splitting around the said wire to provide a wrought aluminum structure enclosing the wire, the extrusion pressure comprising the source of heat generated to render the cladding material plasticized in said die.

4,300,380

APPARATUS AND A METHOD FOR USE IN MAKING A RAILWAY RAIL-FASTENING CLIP

Peter E. Checkley, Upton-upon-Severn, England, assignor to Pandrol Limited, London, England

Continuation of Ser. No. 951,608, Oct. 13, 1978, abandoned. This application Apr. 25, 1980, Ser. No. 143,868

Int. Cl.³ B21D *7/02*

U.S. Cl. 72—306 20 Claims

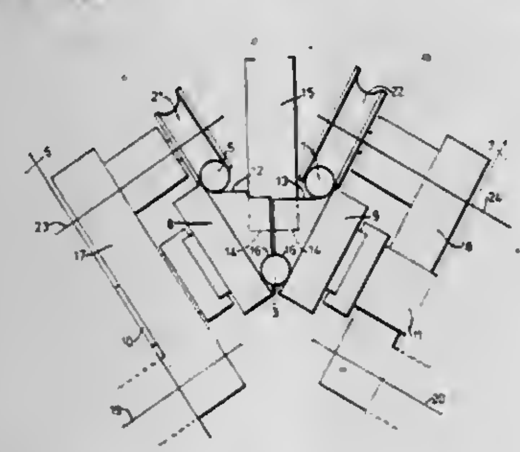

1. Apparatus for use in making railway rail-fastening clips comprising support means capable of supporting a part of a red-hot metal rod, which part is between the ends of the rod, first and second supports, first and second members mounted on the first and second supports, respectively, first and second forming surfaces on the first and second members, respectively, first and second displaceable bending members mounted on the first and second supports, respectively, means for displacing the bending members relative to the first and second forming surfaces, respectively, so that they bend the parts of the rod on both sides of said part about the first and second forming surfaces, respectively, and produce two U-bends in the rod, substantially without movement of said part of the rod, with the result that the end portions of the rod point in substantially opposite directions and overlap without touching one another and means for producing relative motion between the supports so that they come apart to allow the bent rod to move away from the zone in which it was bent.

4,300,381

METHOD FOR PRODUCING INSERT FOR DIESEL ENGINE COMBUSTION CHAMBER

Toshiyasu Sugiuchi, Machida; Susumu Aoyama, Shohnan, and Hiroshi Tokisue, Narashino, all of Japan, assignors to Riken Corporation, Tokyo and M.H. Center Limited, Saitama, both of, Japan, a part interest

Filed Aug. 15, 1980, Ser. No. 178,623

Int. Cl.³ B21D *31/02*

U.S. Cl. 72—327 13 Claims

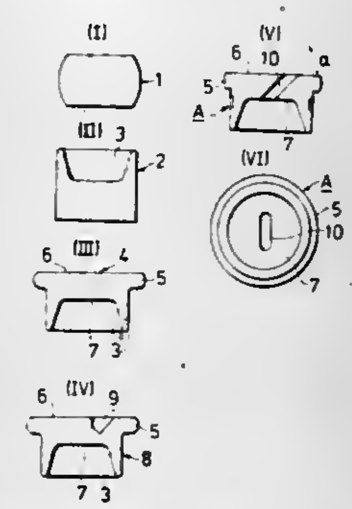

1. A method of producing an insert for the combustion chamber of a diesel engine having an oblique injection port comprising inserting a cylindrical work blank into a die, then cold- or hot-compressing such cylindrical work blank between a punch and counter-punch to form a compressed center-recessed shape, forming an oblique recess in at least one side of the bottom of the center recess of said shape at such an end position as to correspond to the injection port to be formed, and then developing a hole in said oblique recess in conformity with the configuration and extent thereof.

4,300,382

AUTOMOBILE BODY DENT PULLER

James S. Meek, 3303 Lockwood Dr., Chattanooga, Tenn. 37415

Filed May 15, 1980, Ser. No. 150,160

Int. Cl.³ B21D *1/12*

U.S. Cl. 72—478 9 Claims

1. A tool for straightening indentations in sheet metal comprising, a pair of rigid levers, each lever having a first leg elongated along a first axis and a second leg elongated along a second axis disposed angularly to the respective first axis, means for pivotably mounting said levers one to the other substantially at the junction of the first and second axes, the disposition of one lever relatively to the other lever being such that said levers when pivotable to a first position wherein said first axes are superposed substantially upon one another said second axes are disposed angularly to one another whereby both of said first legs only may be inserted into a hole formed

in the sheet metal for receiving said first legs, said levers being pivotable from said first position to a second position wherein said first axes are disposed angularly one to the other and said first legs are restrained from exiting from the hole and engage

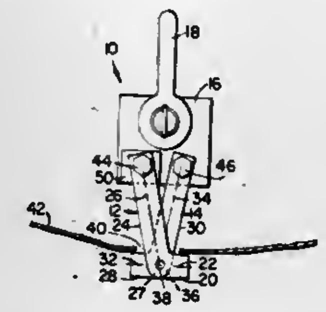

the sheet metal across said hole, and means for grasping both of said second legs in said second position, whereby a pulling force may be applied to said second legs for impact engagement of said first legs with the sheet metal.

4,300,383

CRANKSHAFT DAMPER RESONANCE MONITOR

Michael J. Zinn, Noblesville; Robert C. Bremer, Jr., Brownsburg; Lewis E. Williams, Greenfield, and Hans O. Haupt, Indianapolis, all of Ind., assignors to Wallace Murray Corporation, New York, N.Y.

Filed Aug. 27, 1979, Ser. No. 70,312

Int. Cl.³ G01M *13/00;* G01H *13/00*

U.S. Cl. 73—11 5 Claims

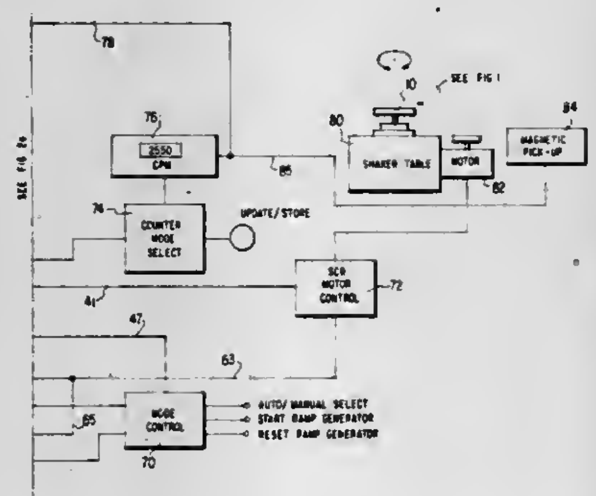

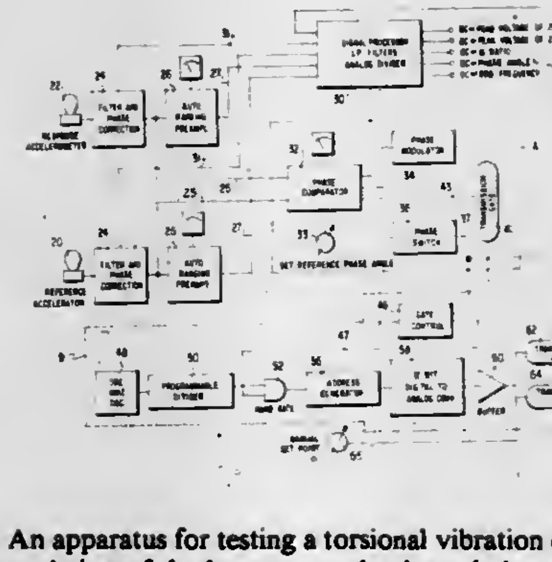

1. An apparatus for testing a torsional vibration damper, the damper being of the known type having a hub and an inertia ring coupled thereto by elastomer, the apparatus including a shaker table for rotationally oscillating the hub of a damper to thereby simulate actual conditions of usage of the damper, means for continuously measuring the phase angle between the hub and the inertia ring of the damper, the improvement comprising, means for varying the frequency of oscillation of the hub so as to maintain a desired, predetermined phase angle between the hub and inertia ring, whereby compensation is made for changes in mechanical properties of the elastomer over the period of time of damper testing, such changes being caused by heat generated within the elastomer and changes in the environment.

4,300,384

METHOD AND APPARATUS FOR TAKING SAMPLES FOR THE DETERMINATION OF BREATH ALCOHOL CONTENT

Peter Wiesner, Ratekau, and Ulrich Heim, Reinfeld, both of Fed. Rep. of Germany, assignors to Drägerwerk Aktiengesellschaft, Fed. Rep. of Germany

Filed Feb. 7, 1980, Ser. No. 119,421

Claims priority, application Fed. Rep. of Germany, Feb. 22, 1979, 2906908

Int. Cl.³ G01N *31/00*

U.S. Cl. 73—23 8 Claims

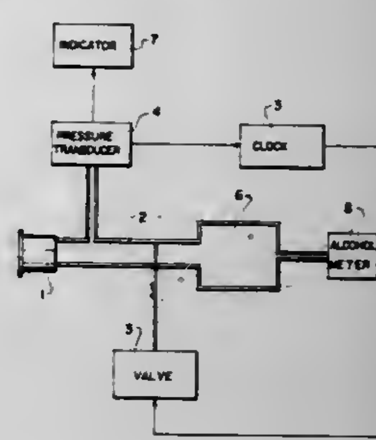

1. A device for determining the alcohol content of a test person's breath by causing the breath to come into equilibrium with alcohol in the person's breathing tract before the breath is tested, comprising, a breath sample line adapted to receive the test person's breath, a valve in said sample line which has a closed position for stopping a flow of breath into the sample line, means defining a test chamber connected to said sample line downstream of said valve for receiving breath only when said valve is open, an alcohol sensor connected to said test chamber for testing breath in said chamber for its alcohol content, and pressure determining and time period means connected to said sample line upstream of said valve and to said valve, for opening said valve only when a predetermined pressure has been attained and maintained for a predetermined time period in said sample line upstream of said valve which is sufficient to establish equilibrium of alcohol in the breath of upstream of said valve and the person's breathing tract.

4,300,385

METHOD AND APPARATUS FOR DETERMINING THE ALCOHOL CONTENT OF A PERSON'S BLOOD

Scato Albarda, Gross Schenkenberg, Fed. Rep. of Germany, assignor to Drägerwerk Aktiengesellschaft, Fed. Rep. of Germany

Filed Feb. 7, 1980, Ser. No. 119,458

Claims priority, application Fed. Rep. of Germany, Feb. 22, 1979, 2906832

Int. Cl.³ G01N *31/00*

U.S. Cl. 73—23 7 Claims

1. A method of determining the alcohol content of a person's blood by the measurement of the alcohol concentration of the person's breathing air using a breathing tube having a flow path extending from an inlet end to an opposite outlet end through which the person directs his breathing air by breathing with the inlet end and which has an alcoholometer connected thereto for continuously measuring the alcohol concentration and an indicator for indicating this concentration, com-

prising directing the breathing air of the person through the tube while preventing any inhaling through the tube, continuously determining the alcohol content of the breathing air with the alcoholometer as it passes through the tube, indicating on

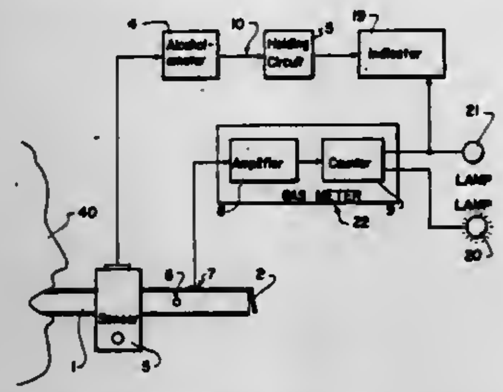

the indicator only the highest of the values of alcohol which are being determined, continuously totaling the quantity of breathing air passing through the tube, and after a predetermined quantity of air has passed through the tube using the indicator value as the concentration of alcohol value.

4,300,386
POROSIMETER ARRANGEMENT
Krishna M. Gupta, 18-B Morningside Manor, Ithaca, N.Y. 14850
Filed Jan. 14, 1980, Ser. No. 111,601
Int. Cl.³ G01N *15/08*
U.S. Cl. 73—38 **17 Claims**

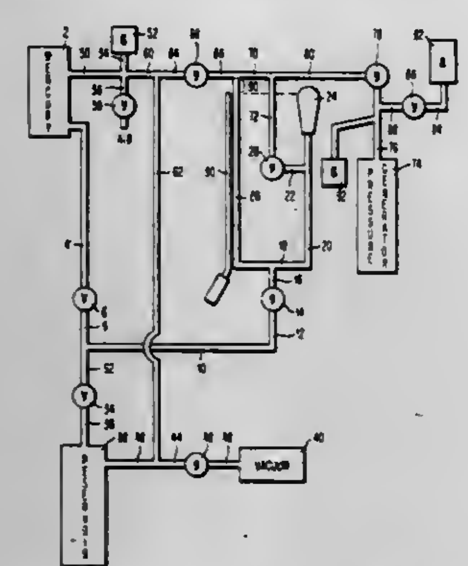

1. A porosimeter arrangement comprising, in combination, (a) a sample chamber having a first conduit extending downwardly therefrom; (b) a penetrometer tube arranged upright at substantially the same elevation as said sample chamber, said penetrometer tube communicating at its lower end with said first conduit; (c) a vessel containing a non-wettable sample intrusion fluid arranged at at least the same elevation as said sample chamber; and (d) a second conduit extending downwardly from said vessel and communicating with said penetrometer tube and said first conduit to enable said fluid to flow by gravity from said vessel to said tube and said chamber.

4,300,387
MEASUREMENT OF THE UNBALANCE OF A ROTOR BODY OF SMALL WEIGHT
Hiroshi Okano, Mishima, and Masayoshi Hirano, Gotenba, both of Japan, assignors to Toyota Jidosha Kogyo Kabushiki Kaisha, Toyota, Japan
Filed Dec. 17, 1979, Ser. No. 103,929
Claims priority, application Japan, Oct. 13, 1979, 54-131304
Int. Cl.³ G01M *1/06*
U.S. Cl. 73—460 **2 Claims**

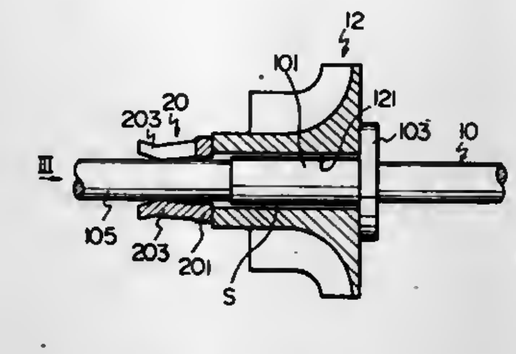

1. A device for holding a rotor body which is 50 g or less in a balance tester provided with a pair of axially spaced apart bearing units, said device comprising:
a shaft comprising a first or middle portion on which the rotor body is inserted, an annular stopper portion adjacent to the first portion, the stopper portion having a diameter larger than that of the first portion, the rotor body and the stopper portions engaging, at their facing side surfaces, with each other so that the rotor body is placed at a predetermined position of the shaft, and second or end portions connected to the first portion and the stopper portion, respectively, said second portions having a diameter smaller than the first portion, said second portions adapted to be rested on the respective bearing unit; and
a sleeve member located on the second portion adjacent to the first portion for urging the rotor body toward the stopper body so that a frictional force is generated between said engaging surfaces of the rotor body and the stopper, said sleeve member comprising a tubular body and a plurality of equiangularly spaced catch members made of leaf springs extending from the inner surface of the tubular body.

4,300,388
METHOD FOR LEAKAGE MEASUREMENT
William B. Hansel, Media, Pa., and Earl W. Smith, Wilmington, Del., assignors to Sun Oil Company of Pennsylvania, Philadelphia, Pa.
Filed Oct. 12, 1979, Ser. No. 84,241
Int. Cl.³ G01M *3/32;* G01F *23/20*
U.S. Cl. 73—49.2 **8 Claims**

1. A method of high sensitivity for measuring leakage of liquid into or out of a storage tank which comprises introducing a freely suspended sensor into the liquid in the tank, said

sensor being coupled to means for sensing mass displacement, and observing the change of displacement of said sensor over

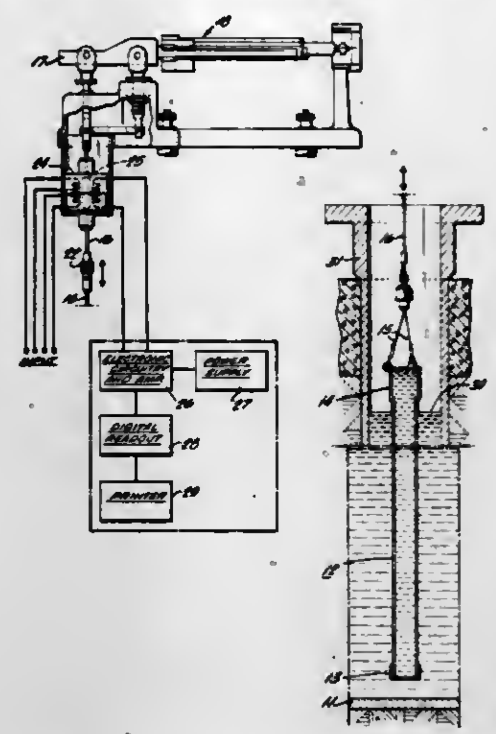

a period of time to determine a change of liquid mass in said tank.

4,300,389
SOFT RECOVERY METHOD FOR GUNFIRED SHELLS
Frank L. Tevelow, Rockville, Md., assignor to The United States of America as represented by the Secretary of the Army, Washington, D.C.
Filed Jun. 6, 1980, Ser. No. 157,145
Int. Cl.³ G01L *5/14*
U.S. Cl. 73—167 **15 Claims**

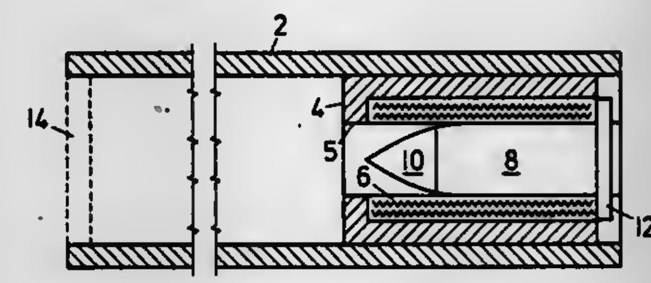

1. A method for soft recovery of a projectile comprising placing an object in the path of said projectile, said object being of such nature as to permit the projectile to become embedded therein upon impact, and decelerating said object with the projectile embedded therein.

4,300,390
APPARATUS FOR DETERMINING POSITIONAL COORDINATES UTILIZING THE TERRESTRIAL MAGNETISM AS A DIRECTIONAL REFERENCE
Sachinobu Shimizu, Tokyo, Japan, assignor to Nippon Telegraph & Telephone Public Corporation, Tokyn, Japan
Filed Sep. 14, 1979, Ser. No. 75,421
Claims priority, application Japan, Jan. 24, 1979, 54-6003; Jan. 24, 1979, 54-6004; Jan. 24, 1979, 54-6005; Jan. 26, 1979, 54-7039; Jan. 29, 1979, 54-8862
Int. Cl.³ G01C *21/20*
U.S. Cl. 73—178 R **8 Claims**

1. Apparatus for determining the positional coordinates of a moving object comprising:
a plurality of magnetic field vector detecting devices each having a rotary magnetic piece and a fixed coil, said detecting devices being disposed in spaced apart fixed relationships to each other;
an inclination detecting device for detecting the inclination of said magnetic field vector detecting devices relative to a vertical direction;
a distance detecting device for detecting the distance that the moving object has travelled during a particular period of time; and
arithmetic means which receives output from said magnetic field vector detecting devices as well as from said inclination detecting device, calculates the horizontal component force

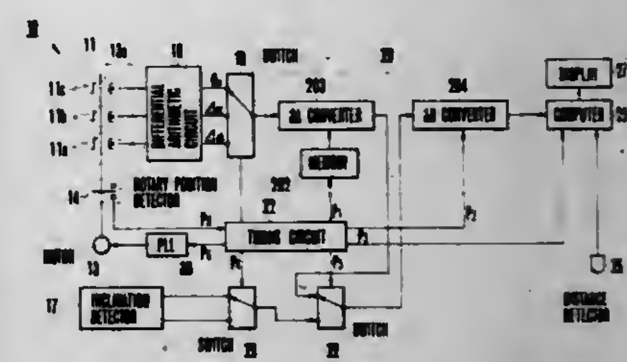

vector of the geomagnetic field by using said output from said magnetic field vector detecting devices and from said inclination detecting device, further calculates the vector in the progress direction of the moving object referring to said horizontal component force vector, and integrates the product of said vector in the progress direction and the output from said distance detecting device, whereby the positional coordinates are obtained as the output of said arithmetic means, and coordinates which have initially been set at an arbitrary point are replaced by the newly determined coordinates when turning to the right or left is carried out at said arbitrary point correctly as ordered.

4,300,391
HOT WIRE ANEMOMETER FOR MEASURING THE FLOW VELOCITY OF GASES AND LIQUIDS (II)
Kurt Eiermann, Pfungstadt, Fed. Rep. of Germany, assignor to Deutsche Gold- und Silber-Scheideanstalt vormals Roessler, Frankfurt, Fed. Rep. of Germany
Filed Jun. 15, 1979, Ser. No. 48,769
Claims priority, application Fed. Rep. of Germany, Jun. 24, 1978, 2827766
Int. Cl.³ G01F *1/68*
U.S. Cl. 73—204 **1 Claim**

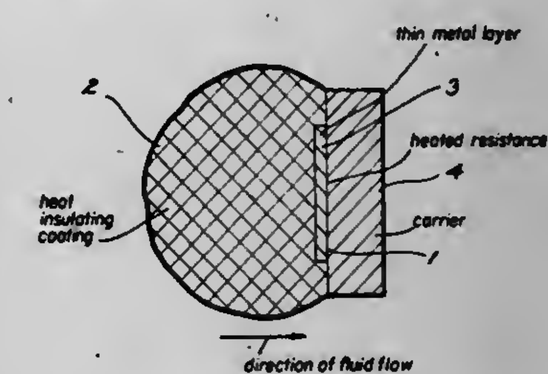

1. In a hot wire anemometer adapted to be located in a flowing fluid for the measurement of the flow velocity thereof and having at least one temperature dependent heated resistance, the improvement comprising:
said heated resistance consisting essentially of a thin metal layer applied on an electrically insulating carrier located on the downstream side of said resistance, and heat insulation covering the upstream side of said heated resistance to minimize heat transfer between said side and the flowing fluid and to render negligible any changes in said

transfer occasioned by build-up of dust, or the like, on said upstream side, the downstream side of each said resistance being adapted for greater heat transfer between said downstream side and the flowing fluid than the heat transfer between said upstream side and the flowing fluid.

4,300,392

INTERCHANGEABLE NETWORKS WITH NON-LINEAR SENSORS AND METHOD OF PRODUCING SUCH NETWORKS

Milton D. Bloomer; John D. Harnden, Jr., and Denise A. Dealleabach, all of Schenectady, N.Y., assignors to General Electric Company, Schenectady, N.Y.

Filed Feb. 14, 1980, Ser. No. 121,488

Int. Cl.³ G01K *7/24*

U.S. Cl. 73—362 AR **11 Claims**

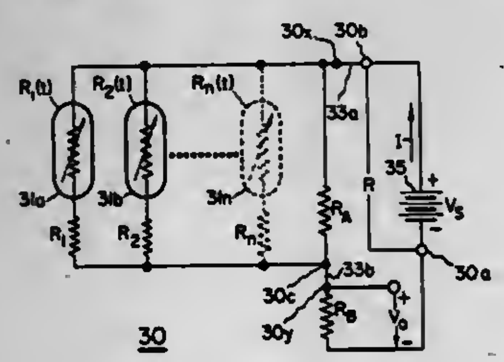

1. Apparatus containing only electrically passive elements and having an electrical parameter which is a selected one of terminal conductance and terminal resistance, said electrical parameter having a magnitude substantially linearly related to the magnitude of a sensed parameter, comprising:

N sensing means, where N is an integer greater than zero, for providing, between first and second terminals thereof, an electrical resistance of magnitude non-linearly related to the magnitude of the sensed parameter;

first and second network terminals; and

a plurality (N+2) of fixed value electrical resistance elements; said plurality of resistance elements including N electrical resistance elements of fixed value, each of the fixed resistance elements electrically series connected to the first terminal of an associated one of said N sensing means to form a like number N of branch circuits; all of said N branch circuits being connected in electrical parallel;

said first network terminal being connected to the paralleled second terminals of all of said N sensing means;

the (N+1)-st fixed value resistance element being connected in electrical parallel with all of the N paralleled branch circuits; and

the (N+2)-nd fixed value resistance element being connected in electrical series between said second network terminal and the junction between said (N+1)-st fixed value resistance element and all of said N branch circuits;

the fixed resistance value of each of said (N+2) resistance elements being simultaneously selected to provide, between said first and second network terminals, both a desired value of said electrical parameter for a preselected value of sensed parameter, and also a substantially linear desired value of the rate of change of the magnitude of the electrical parameter for a linear change in the magnitude of said sensed parameter.

4,300,393

SAMPLE INTRODUCTION APPARATUS FOR GAS CHROMATOGRAPHIC ANALYSIS USING PACKED OR CAPILLARY BORE OPEN TUBULAR COLUMNS AND METHOD OF TESTING

Stanley D. Stearns, Box 55603, Houston, Tex. 77055

Filed Dec. 14, 1979, Ser. No. 103,450

Int. Cl.³ G01N *1/10*

U.S. Cl. 73—863.11 **18 Claims**

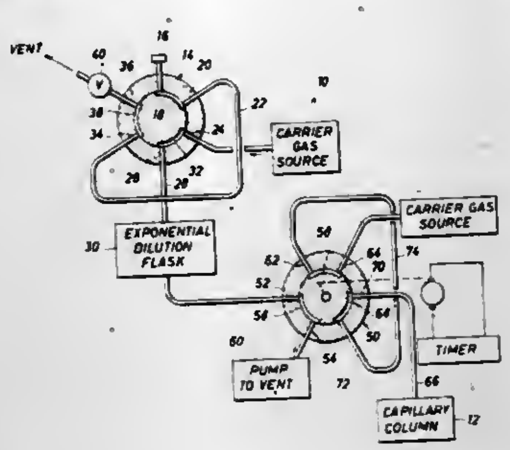

1. A sample injection valve having a relatively fixed stator and a movable rotor having a plurality of ports in the stator, the ports comprising a syringe injection port, a sample loop storage connecting port, a second sample storage loop connecting port, a dilution gas introduction port, a back pressure vent port and an outlet port, there being three internal passages within said rotor means which are selectively moved to connect with pairs of said ports and wherein said sample injection port is adapted to receive a syringe for injection a sample thereinto and further wherein said stator and rotor are made of a material which can be elevated to a temperature sufficient to convert the injected sample into a gas by heating thereof wherein the injected sample gas is then received and stored in the sample injection loop;

wherein said syringe injection port terminates at a relatively small offset volume and serially connects with one of the internal passages within said rotor;

a source of a dilution gas which is introduced through the dilution gas port and is conducted by one of the internal passages to fill the sample loop connected to the sample loop ports;

wherein said sample injection valve is switched to communicate said sample injection storage loop with said syringe injection port prior to insertion of a syringe such that the sample injection port is filled from the internal passage towards the exterior by the dilution gas;

wherein the sample from the syringe is a liquid which liquid is heated by the sample injection valve on delivery from the syringe to vaportize and flow into the sample storage loop in a gaseous state; and

wherein said sample storage loop is sized to receive the entirety of the vaporized sample.

4,300,394

SONIC WAVE TRAVEL TIME MEASURING SYSTEM

Bruce F. Wiley, Bartlesville, Okla., assignor to Phillips Petroleum Co., Bartlesville, Okla.

Filed May 24, 1979, Ser. No. 42,164

Int. Cl.³ G01N *29/00*

U.S. Cl. 73—597 **11 Claims**

1. Apparatus comprising:

an electrical pulser means;

first transducer means for introducing a sonic wave into a core sample;

means for transmitting an electrical pulse from said electrical pulser means to said first transducer means, said first transducer means introducing a sonic wave into said core sample in response to the transmitted electrical pulse;

an electrical receiver means;

second transducer means for receiving said sonic wave after said sonic wave propagates through said core sample, said second transducer means providing an electrical pulse to said receiver means when a sonic wave is received by said second transducer means;

a timing means;

a delay means;

means for supplying a sync pulse from said electrical pulser means to said delay means when the electrical pulse is transmitted from said electrical pulser means to said first transducer means;

means for supplying a delayed sync pulse from said delay means to the trigger input of said timing means to thereby initiate said timing means;

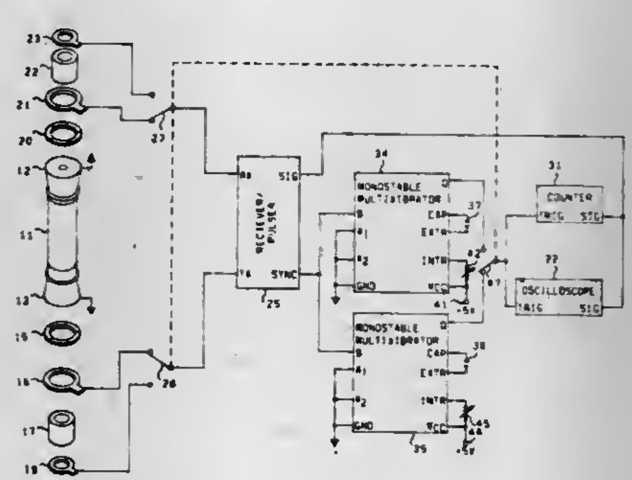

means for supplying a stop count signal from said receiver means to said timing means, when the electrical pulse from said second transducer means is received by said receiver means, to thereby stop said timing means, said delay means being adjusted in such a manner that the time on said timing means is representative only of the propagation time of said sonic wave through said core sample;

an oscilloscope means;

means for providing said stop count signal to said oscilloscope means; and

means for adjusting the amplitude of said stop count signal, the amplitude of said stop count signal being adjusted until a desired amplitude is displayed on said oscilloscope means.

4,300,395

SEMICONDUCTOR PRESSURE DETECTION DEVICE

Shunji Shirouzu, Ayase, and Ryuzo Noda, Kawasaki, both of Japan, assignors to Tokyo Shibaura Denki Kabushiki Kaisha, Kawasaki, Japan

Filed Oct. 25, 1979, Ser. No. 87,938

Claims priority, application Japan, Nov. 8, 1978, 53-137502; Nov. 13, 1978, 53-139518; May 1, 1979, 54-53843; Oct. 1, 1979, 54-126552

Int. Cl.³ G01L *19/04*

U.S. Cl. 73—708 **8 Claims**

1. A semiconductor pressure detection device comprising:

a semiconductor substrate of a first conductivity type;

a first semiconductor region of a second conductivity type formed in the surface area of said semiconductor substrate to provide, together with said semiconductor substrate, a temperature-sensitive diode;

power supply means connected to said diode to generate a voltage according to a variation of a forward voltage of said diode resulting from a temperature variation; and

a bridge circuit including a resistive semiconductor region of said second conductivity type which is formed in the surface area of said semiconductor substrate and has a piezo-effect, said bridge circuit being adapted to receive an output voltage of said power supply means and produce output voltage according to pressure applied;

wherein said semiconductor substrate is made of an N-type semiconductor and attached to a base having a pressure introduction hole, the semiconductor region of said second conductivity type is made of a P-type semiconductor,

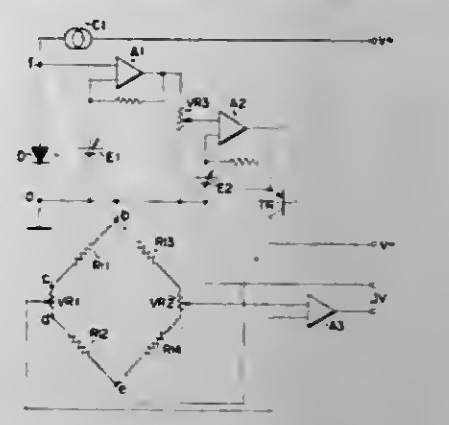

and said power supply means comprises a first reference power supply for supplying a reference voltage to a diode, an amplifier connected to said diode and a second reference power supply for controlling an output voltage by a transistor which is controlled by an output of said amplifier.

4,300,396

PRESSURE RESPONSIVE CONTROL DEVICE AND METHOD OF MAKING THE SAME

Thomas M. Buckshaw, Indiana, Pa., assignor to Robertshaw Controls Company, Richmond, Va.

Filed Feb. 19, 1980, Ser. No. 122,446

Int. Cl.³ G01L *9/10*

U.S. Cl. 73—728 **11 Claims**

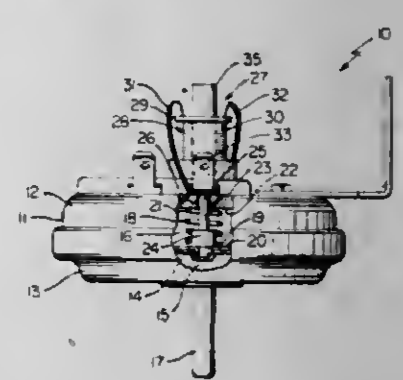

1. In a pressure responsive control device having a housing means carrying a flexible diaphragm means therein that cooperates with said housing means to define a pressure chamber therein that is adapted to receive a variable pressure that acts against said diaphragm means to position the same relative to said housing means in relation to the value of said pressure, said diaphragm means being operatively interconnected to a plunger means that follows the movement of said diaphragm means, said control device having transducer means operatively associated with said plunger means to produce an electrical signal in relation to the position of said plunger means, a core means being carried by said plunger means in axially aligned relation therewith, an induction coil means carried by said control device and receiving said core means therein whereby said core means and said induction coil means comprise said transducer means, a range spring being carried by said housing means and being operatively interconnected to said diaphragm means to tend to oppose movement of said diaphragm means in one direction of movement thereof, calibration means to calibrate said range spring, said calibrating means comprising a movable calibrating member carried by said housing means, said range spring comprising a coiled

compression spring having opposed ends, one of said ends of said coiled compression spring bearing against said calibrating member and the other of said ends bearing against said plunger to be operatively interconnected to said diaphragm means, said plunger having an annular shoulder thereon, said other end of said coiled compression spring bearing against said annular shoulder, said coil means comprising a spool-like member having an electrical coil disposed thereon, a bracket member being secured to said housing means and carrying said spool-like member, the improvement wherein said spool-like member has an externally threaded portion, said calibrating member being threaded to said threaded portion to provide for calibrating movement thereof.

4,300,397

DEVICE AND METHOD FOR DETERMINING MATERIAL STRENGTH IN SITU

Carel J. H. Brest van Kempen, 4920 Emigration Canyon, Salt Lake City, Utah 84104

Filed Apr. 30, 1980, Ser. No. 144,991

Int. Cl.^{3} G01N *3/08*

U.S. Cl. 73—818 **37 Claims**

1. A method for determining the compressive strength of solid matter, comprising the steps of:

drilling a hole in said solid matter for access to the region to be measured;

inserting an expanding toothed anchor means in such drilled hole;

measuring the rate of increase in applied force to the anchor teeth per unit distance of anchor tooth penetration into said solid matter; and

calculating said compressive strength from said movement.

4,300,398

APPARATUS FOR MEASURING DEFLECTION OF A BLADE UPON APPLICATION OF FORCE THERETO

Bela Kaltenekker, and William L. Loofbourrow, both of Healdsburg, Calif., assignors to Fairchild Camera & Instr. Corp., Mountain View, Calif.

Filed Dec. 3, 1979, Ser. No. 99,963

Int. Cl.^{3} G01N *3/20*

U.S. Cl. 73—849 **5 Claims**

1. Apparatus for measuring deflection of a cutting blade upon an increase in force applied thereto comprising:

a base;

a table mounted to the base so as to be movable in first and second opposite directions relative thereto;

means for moving the table relative to the base a chosen distance in said first direction;

a body secured to the table so as to be movable therewith;

a rod mounted to the body so as to be movable in one and the other opposite directions relative thereto, generally corresponding to said first and second opposite directions, the apparatus being positionable to bring a tip of the rod into contact with the cutting blade;

resilient spring means operatively interconnecting the body and rod, against which the rod is movable in the other direction, a given force applied to the rod in said other direction corresponding to a certain movement of the rod relative to the body in said other direction; and

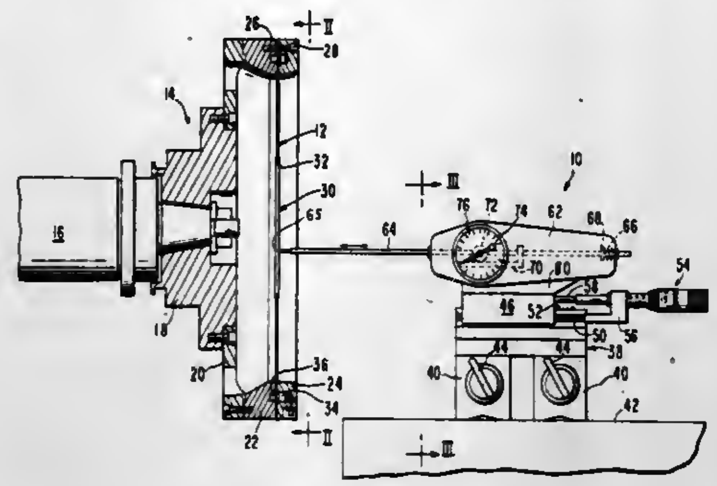

indicator means operatively connected with the rod for indicating the amount of force being applied to the rod urging the rod in the other direction.

4,300,399

MEASURING TWO-PHASE FLOW

Petrus J. M. Kuijpers; Paulus A. Stuivenwold, and Johannes van Arkel, all of Rijswijk, Netherlands, assignors to Shell Oil Company, Houston, Tex.

Filed May 1, 1980, Ser. No. 145,565

Claims priority, application United Kingdom, May 9, 1979, 16130/79

Int. Cl.^{3} G01F *1/34, 1/74*

U.S. Cl. 73—861.04 **8 Claims**

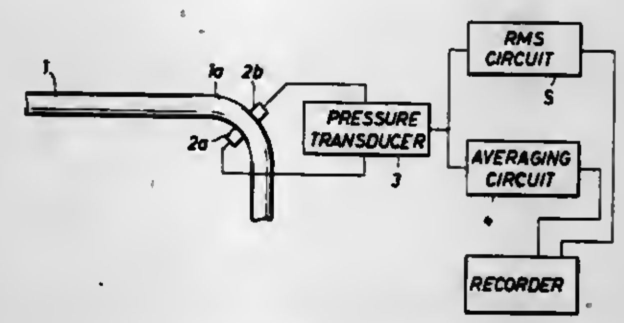

1. A method for determining the individual flow rates of the phases in a flowing two-phase medium, comprising the steps of:

creating a high-pressure zone and a low-pressure zone in the flowing medium by generating a centripetal force in the flow;

determining a first quantity representative for the average centripetal force by measuring the average value of the difference in pressures at these zones over a predetermined time interval over which the flow conditions remain substantially constant;

determining a second quantity representative for the average local turbulences and/or pulsations in the flow by determining the RMS value of the fluctuations of this difference over the same time interval;

comparing the values of the first and second quantities with reference data of these quantities, which data represent individual flow rates of the two phases over time intervals over which the flow conditions have remained constant; and

deriving from said comparison the individual flow rates of the two phases over said predetermined time interval.

4,300,400

ACOUSTIC FLOWMETER WITH REYNOLDS NUMBER COMPENSATION

John M. Bistrain, Jr., Gibson Island, and Lawrence G. Wright, Pasadena, both of Md., assignors to Westinghouse Electric Corp., Pittsburgh, Pa.

Filed Apr. 5, 1979, Ser. No. 27,433

Int. Cl.^{3} G01F *1/66*

U.S. Cl. 73—861.28 **8 Claims**

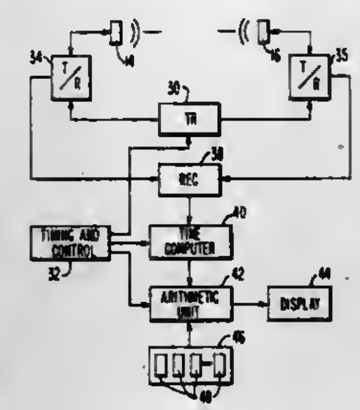

1. Acoustic flowmeter apparatus for measuring fluid flow in a conveyance, said fluid being subject to a varying Reynolds number, comprising:

(a) means for projecting acoustic energy through said fluid from respective upstream and downstream transducers, the relative upstream and downstream travel times of said projected acoustic energy being indicative of the velocity of said fluid;

(b) means for obtaining an indication of said fluid velocity based upon said travel times;

(c) arithmetic means for raising said indication to a predetermined power other than one and thereafter modifying by a predetermined constant value.

4,300,401

METHOD AND APPARATUS FOR DETERMINING FLUID FLOW

Norman E. Pedersen, Wilmington, Mass., assignor to Panametrics, Inc., Waltham, Mass.

Filed Oct. 9, 1979, Ser. No. 82,820

Int. Cl.^{3} G01F *1/66*

U.S. Cl. 73—861.31 **14 Claims**

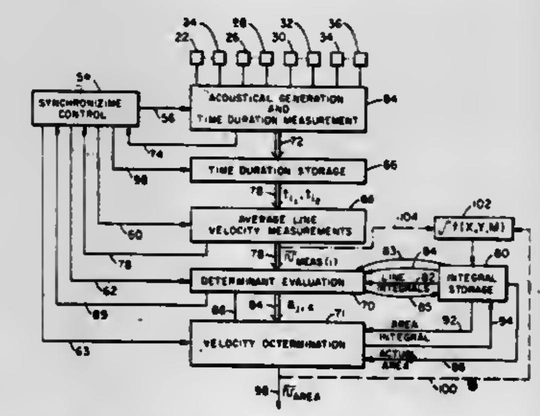

1. A method for determining average fluid velocity across a reference plane of a fluid conveyance comprising the steps of

selecting a plurality of functions $f(p,m_k)$, which each represent an approximation of the flow velocity profile P(p) of fluid traversing said reference plane, where p defines a position in said plane and each m_k is a function of the Reynolds number;

approximating the flow velocity profile by a linear combination of said functions, said combination being of the form

$$P(p) = \sum_{j,k} A_{j,k} f_j(p,m_k)$$

where each $A_{j,k}$ is an unknown scalar constant and j and k are positive integers over which the summation is taken;

measuring the time durations for acoustical sounds to travel upstream and downstream along each of a plurality of straight line paths, each path extending between an upstream wall position of said fluid conveyance and a downstream wall position of the conveyance, the number of known paths being not less than the multiplicative product of j and k;

determining a measured average fluid flow velocity, vel. meas(i), for each path from the measured time durations;

determining said unknown constants $A_{j,k}$ by

forming a system of simultaneous equations having the form

$$\text{vel. meas}(i) = \int_{P_i} \frac{\dot{P}(p)dp}{PL_i} = \sum_{j,k} \frac{A_{j,k}}{PL_i} \int_{P_i} f_j(p,m_k)dp$$

where PL_i is the length of the i^{th} path, P_i defines the i^{th} known path and P_i is the line integral along the path P_i, and

solving said system of simultaneous equations for said $A_{j,k}$ by

evaluating said line integrals along said flow paths,

substituting the known values for vel. meas(i) and PL_i, and

solving for the constants $A_{j,k}$;

determining average flow V across said plane by evaluating the equation

$$\overline{V} = \sum_{j,k} \frac{A_{j,k}}{PA} \int_{\text{area}} f_j(p,m_k)dp$$

where PA is the area of the reference plane bounded by said conveyance and the integral is taken over the entire area of the reference plane bounded by the fluid conveyance.

4,300,402

FLOW MEASURING NEEDLE AND ORIFICE FOR FLOW METER

John Dimeff, 5346 Greenside Dr., San Jose, Calif. 95127

Filed Nov. 16, 1979, Ser. No. 95,131

Int. Cl.^{3} G01F *1/22*

U.S. Cl. 73—861.54 **16 Claims**

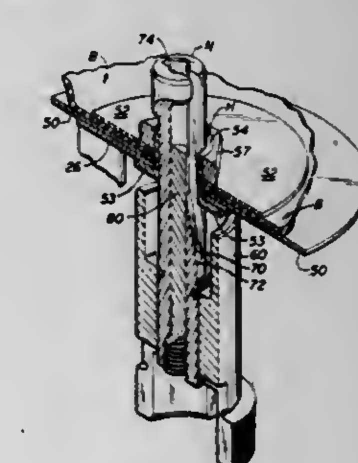

1. A remote volume flow meter of the type including a housing having an inlet and an outlet for communication of air therethrough, a biased movable diaphragm positioned across the air flow having a centrally located hole, a needle positioned within said hole, said needle configured with a passage-

way to allow air to pass from one side of the diaphragm to the other side of the diaphragm, and means for producing an electric signal responsive to the position of said diaphragm, the improvement comprising:

means for mounting said needle to said housing;

said passageway having a varying cross-section; and

means for adjustably inserting an adjustment needle centrally within said passageway whereby the desired relationship between the mass flow rate through the meter and the displacement of the diaphragm is achieved.

4,300,403

APPARATUS FOR MEASURING STRESS DISTRIBUTION ACROSS THE WIDTH OF FLEXIBLE STRIP

Bernd Berger, Kaarst; Gert Mücke, Hilden; Helmut Thies, Kaarst; Eberhard Neuschütz, Ratingen, and Heinz Oppermann, Düsseldorf, all of Fed. Rep. of Germany, assignors to Betriebsforschungs Institut VDeh, Düsseldorf, Fed. Rep. of Germany

Filed Jan. 12, 1980, Ser. No. 158,926

Claims priority, application Fed. Rep. of Germany, Jun. 15, 1979, 2924315

Int. Cl.³ G01L *5/10*

U.S. Cl. 73—862.07 **11 Claims**

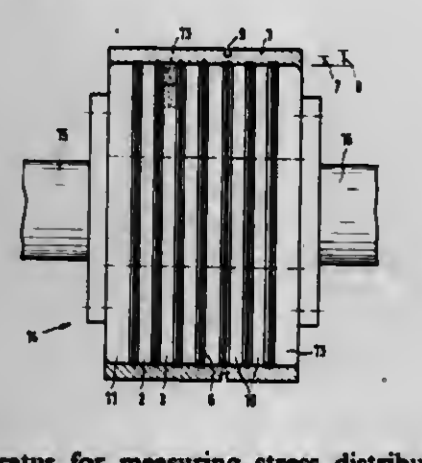

1. Apparatus for measuring stress distribution across the width of flexible strip travelling in the direction of its length, of the kind comprising a pick-up deflector roller comprising a plurality of closely laterally adjacent rings running with the strip, the strip being angularly deflected under tension, said rings being encased in a common outer cover or tyre comprising a flexible elastic synthetic or natural material, and the peripheral edges of adjoining rings are cut away and the resulting local recesses, as compared with a smooth cylindrical roller surface, are at least partially filled by the material of the outer tire.

4,300,404

LIQUID SPECIMEN CONTAINER

Jack J. Mehl, Landing, and Cyril J. Calpin, Oak Ridge, both of N.J., assignors to Becton, Dickinson and Company, Paramus, N.J.

Continuation-in-part of Ser. No. 856,304, Dec. 1, 1977, abandoned. This application Sep. 10, 1979, Ser. No. 74,019

Int. Cl.³ G01N *1/14*

U.S. Cl. 73—863.52 **7 Claims**

1. A collection container for collecting, transporting and dispensing a potentially hazardous, biological liquid, which comprises

a cup to hold said liquid, said cup having an open end, a closed end and sidewalls joining said ends;

a lid adapted to close the open end, mounted on the open end of the cup and having a central portion, a peripheral margin and a sealing flange at the periphery of the peripheral margin, said peripheral sealing flange making sealing engagement with the open end of the cup, the central portion comprising a continuous, closed recess projecting inwardly inside the cup, said recess having an access portal on the outer surface of said lid and said recess being of a size adapted to receive the cannula pierceable end of a stoppered, air-evacuated tube; and

a cannula mounted on the central portion of said lid with a first needle end positioned wholly within the recess in a

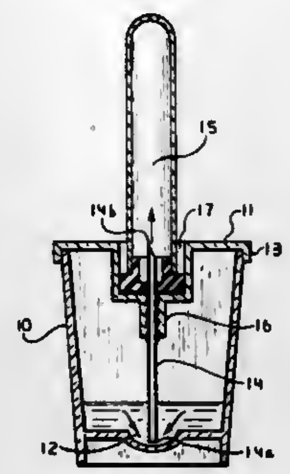

position to pierce the stopper of an air-evacuated tube when said tube is received with its pierceable stopper end first into said recess, and a second needle end within the cup so that communication between said cup and the tube is established when said tube is inserted in the recess.

4,300,405

CENTRAL GUIDE MEANS FOR THE PISTON OF A RECIPROCATING PISTON MACHINE

Udo Szczepanek, Eichenau, Fed. Rep. of Germany, assignor to Bauer Kompressoren, GmbH, Munich, Fed. Rep. of Germany

Filed Mar. 17, 1980, Ser. No. 130,833

Claims priority, application Fed. Rep. of Germany, Apr. 5, 1979, 2913688

Int. Cl.³ F16H *21/22*

U.S. Cl. 74—44 **10 Claims**

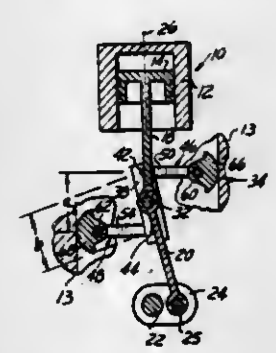

1. In a piston machine having a cylinder with a longitudinal central axis, a piston rod reciprocating within said cylinder and having a free end, and a driving rod, central guide means comprising a journaling point along said longitudinal axis, a guide lever coupled at its center to said free end of said piston rod and to said driving connecting rod at said journaling point, said lever being approximately oriented along said longitudinal central axis, a pair of connecting links of equal length, said lever being journaled at two lever journaling points equidistantly spaced on opposite ends of said lever to said connecting links, means fixing the free end of each of said connecting links to one of a pair of fixed points equidistantly spaced and on opposite sides of said longitudinal central axis, said fixed points being separated in the longitudinal axial direction of said cylinder by a distance equal to the distance between said lever journaling points.

4,300,406

APPARATUS FOR DRIVING A PLURALITY OF UNITS

Guido Negro, and Reinhold Fitzel, both of Neuffen, Fed. Rep. of Germany, assignors to Bielomatik Leuze & Co., Fed. Rep. of Germany

Filed Jan. 16, 1980, Ser. No. 112,577

Claims priority, application Fed. Rep. of Germany, Jan. 24, 1979, 2902589

Int. Cl.³ B42C *19/00;* **F16H** *21/44*

U.S. Cl. 74—54 **16 Claims**

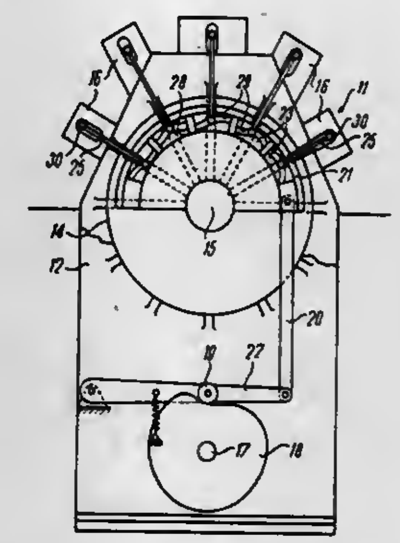

1. An apparatus for simultaneously driving a plurality of successive article processing units, comprising:

a machine frame, the units being affixed to the frame and angularly spaced from one another with respect to a central axis;

a drive shaft rotatably mounted to the frame;

eccentric drive means disposed on the shaft;

an actuating rod drivably connected to the eccentric drive means;

an actuator pivotally mounted on the frame, connected to the actuating rod and arranged to reciprocate when driven by the actuating rod; and,

a plurality of respective cam means on the actuator for independently driving each of the units by movements transverse to movement of the actuator, whereby articles are successively processed in simultaneous operations of the different units.

4,300,407

MOUNTING FOR AN ADJUSTABLE STEERING HAND WHEEL FOR MOTOR VEHICLES

Wolfgang Köpf, Stuttgart, Fed. Rep. of Germany, assignor to Daimler-Benz Aktiengesellschaft, Stuttgart, Fed. Rep. of Germany

Filed Jan. 9, 1980, Ser. No. 110,700

Claims priority, application Fed. Rep. of Germany, Jan. 13, 1979, 2901192

Int. Cl.³ B62D *1/18;* **G05G** *5/18, 5/22*

U.S. Cl. 74—493 **47 Claims**

1. A mounting for an adjustable steering hand wheel for motor vehicles, comprising outer column means essentially immovably secured at a fixed vehicle part, bearing housing means pivotally secured at the upper end of the outer column means by way of a pivot joint means defining a pivot axis, a steering shaft means extending through the outer column means which is operatively connected by way of a shaft joint means with a steering shaft section non-rotatably connected with the steering hand wheel and supported in the bearing housing means, said bearing housing means being provided with an arm means extending adjacent the outer column means, and adjustable form-locking detent means between the arm means and the outer column means and having two cooperating detent parts, a first of said detent parts including detent row means and the second part including a locking means cooperating with the detent row means, one of the detent parts being operable to be moved at least approximately radially with respect to said pivot axis to effect engagement and disengagement between the two detent parts, one of the two parts of the detent means being operatively associated with the end area of the arm means and the other part being operatively associated with the outer column means at a place thereof

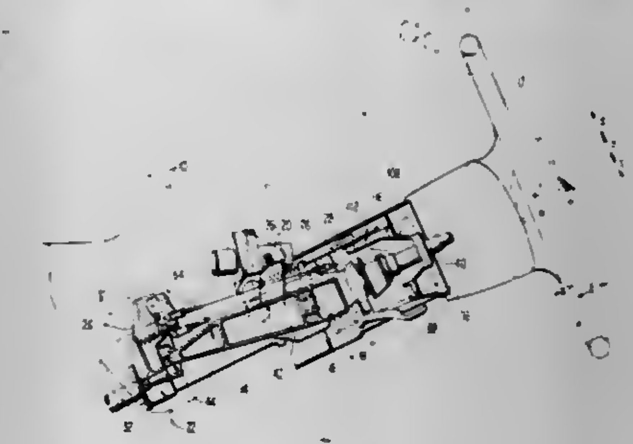

corresponding to the end area of the arm means, and wherein one part of the detent means is provided on a separate member movable in the direction of the detent row means relative to its associated structural part consisting of outer column means or arm means and is lockable in a position relative to said structural part.

4,300,408

CONTROL CABLE

Junnosuke Yoshifuji, Takarazuka, Japan, assignor to Nippon Cable System Inc., Hyogo, Japan

Filed Feb. 22, 1980, Ser. No. 123,708

Claims priority, application Japan, Oct. 5, 1979, 54-129178

Int. Cl.³ F16C *1/10;* **C10M** *5/26, 7/50*

U.S. Cl. 74—501 R **7 Claims**

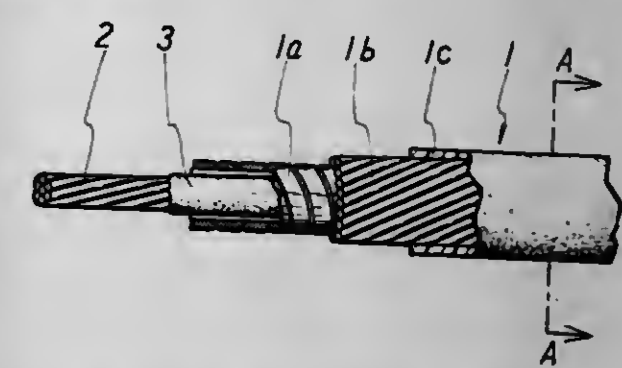

1. In a control cable comprising an inner cable and a conduit, the improvement which comprises

a lubricating layer, which is formed from a composition obtained by admixing high density polyethylene powders or pellets and a fluoro-alkylated silicone oil, being interposed between the inner cable and the conduit.

4,300,409

RESILIENT LEVER ASSEMBLY

John D. Leighton, Bloomfield Hills, Mich., assignor to Betty Leighton, Bloomfield Hills, Mich., a part interest

Continuation-in-part of Ser. No. 761,647, Jan. 24, 1977, Pat. No. 4,130,027. This application Sep. 25, 1978, Ser. No. 945,238

Int. Cl.³ G05G *1/14*

U.S. Cl. 74—512 **17 Claims**

1. In a motor vehicle brake assembly comprising a brake actuating element, the improvement comprising a resilient lever assembly comprising a rigid lever and a resilient support at one end thereof, stop means cooperable with said lever and resisting movement thereof in one direction to define a normal position, a fixed member, said resilient support comprising an

elongated spring-like element connected to said lever at one end and to said fixed member at its other end, and means securing said resilient support to said fixed member in a rotational position such that said support will be stressed in a

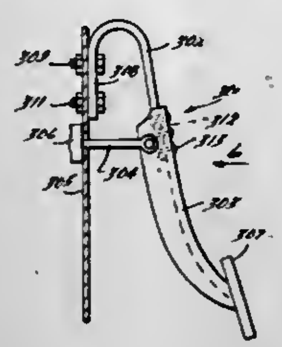

direction constantly urging the lever against said stop means, said spring-like element having sufficient resilience to deflect when an operator depresses said lever to actuate said brake actuating element and to return said lever to its normal position when operator pressure is released.

4,300,410
TENSION-COMPRESSION MEMBER
Narasimhan Raghupathi, Westland, and Edward A. Kure, Lathrup Village, both of Mich., assignors to Ford Motor Company, Dearborn, Mich.
Filed Jan. 4, 1980, Ser. No. 109,447
Int. Cl.³ G05G *1/00*
U.S. Cl. 74—579 R **8 Claims**

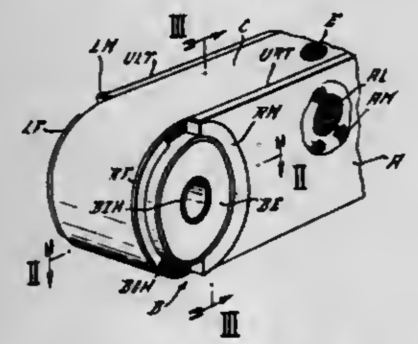

1. A lightweight structural component which comprises:
(a) a first tubular member having a first end and a second end and two pairs of integrally formed extending longitudinally from two opposing sides thereof and forming oppositely positioned channels along the exterior of said first tubular member,
(b) a second tubular member juxtapositioned with respect to said first end of said first tubular member such that its longitudinal axis is substantially perpendicular to the longitudinal axis of said first tubular member, and
(c) a third tubular member juxtapositioned with respect to said second end of said first tubular member such that its longitudinal axis is substantially perpendicular to the longitudinal axis of said first tubular member and in substantially the same plane as said longitudinal axis of said second tubular member,
(d) filaments in a plastic matrix that encircle lengthwise said first tubular member, lay within said oppositely positioned channels, and bind said second tubular member and said third tubular member to said first end and said second end respectively, said first tubular member having a cavity extending along its longitudinal axis, said second tubular member and said third tubular member each having a cavity extending along its longitudinal axis and substantially filled with elastomeric materials, said elastomeric materials having load attachments means positioned therein.

4,300,411
GEAR CRANK FOR A BICYCLE
Takashi Segawa, Sakai, Japan, assignor to Shimano Industrial Company Limited, Osaka, Japan
Filed Jun. 11, 1979, Ser. No. 47,563
Claims priority, application Japan, Jun. 12, 1978, 53-80968[U]; Jun. 12, 1978, 53-80969[U]
Int. Cl.³ G05G *1/14;* **B62M** *1/02*
U.S. Cl. 74—594.2 **3 Claims**

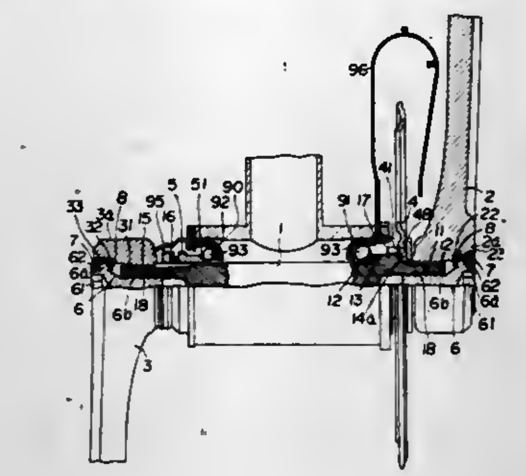

1. A gear crank for a bicycle, comprising a crank shaft having a first and a second end portion; a pair of crank arms respectively connected to the first and second end portion of said crank shaft; at least one chain gear mounted to said first end portion of said crank shaft, said crank shaft having at said first end portion an integral larger diameter portion extending radially outward of said first end portion and a stepped portion having a retaining face directed axially outward of said first end portion, said chain gear having at its center an insertion bore fit into said first end portion of said crank shaft and, around said insertion bore, a contact face contacting with said retaining face; a number of axially extending splines provided at the outer periphery of said larger diameter portion and projections respectively engageable with said splines provided at said chain gear at a position axially outward with respect to said insertion bore for restraining said chain gear from rotation with respect to said crank shaft; and a first and second connecting means respectively provided between said crank arms and said first and second end portions of said crank shaft for connecting said crank arms to said first and second end portions, said first connecting means connecting one of said crank arms to said first end portion and biassing said one crank arm toward said retaining face to allow said contact face at said chain gear to contact with said retaining face.

4,300,412
APPARATUS FOR LOOSENING VEHICLE WHEEL LUGS
William Houser, 751 Stony Hill Rd., Yardley, R.D. 1, Woodside, Pa. 19067, and John Mantzer, 681 Arbor La., Warminster, Pa. 18974
Filed Aug. 29, 1980, Ser. No. 182,448
Int. Cl.³ B25B *13/00*
U.S. Cl. 81—53 R **10 Claims**

1. Apparatus for loosening and removing vehicle wheel lugs, comprising:
(a) a "U" shaped base member having a first aperture located on a first upstanding arm of said "U" and a second coaxial aperture located on said second upstanding arm of said "U",
(b) a central rod member rotatably positioned within said apertures, said rod extending from one side of said "U" and terminating in a socket member adapted to coact with said wheel lug,
(c) a lever arm coupled to said rod between said upstanding arms and adapted when pivoted to rotate said rod to impart a large torque to said socket member with said base

of said "U" shaped member positioned at an angle on the ground to provide a support for the foot of a user when

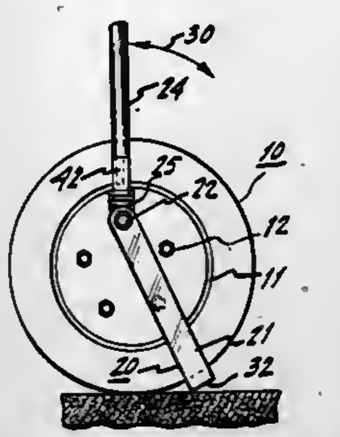

pivoting said lever arm to enable said user to apply his body weight to said base when accessing said lever arm.

4,300,413
RATCHET WRENCH WITH ONE-HAND CONTROL AND NEUTRAL CAPABILITY
Joseph Garofalo, 50 Eder Ter., South Orange, N.J. 07079
Filed Mar. 3, 1980, Ser. No. 126,403
Int. Cl.³ B25B *13/46*
U.S. Cl. 81—62 **10 Claims**

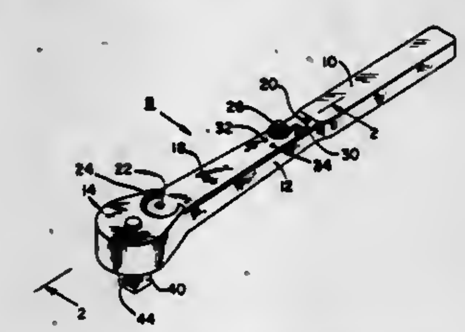

1. A ratchet wrench selectably controllable for rotating a drive member thereof either clockwise or counterclockwise and also providing free-wheeling of that drive member with selection being effected immediately by means close to the normal handle grasping portion of the wrench, said wrench comprising (1) a body including a head portion, a midportion and a handle portion; (2) a ratchet gear disposed on said body at the head portion thereof, that gear having teeth on its outer periphery and further having a drive member extending coaxially from it, substantially normally to said body; (3) means retaining said ratchet gear rotatably on said body; (4) a ratchet pawl disposed on said body adjacent said ratchet gear, that pawl being configured to engage that gear at the teeth thereof to rotate the same and the drive member extending therefrom either clockwise or counterclockwise and also to remain in a neutral, disengaged condition with respect to the ratchet gear whereby that gear and its drive member are left free-wheeling with respect to said body; (5) means retaining said ratchet pawl on said body and permitting rotation of that pawl to achieve the aforesaid conditions of engagement and disengagement of the same with respect to the ratchet gear, and (6) a control rod means connected to said pawl at one side thereof and extending therefrom along and within said midportion of said body and terminating close to said handle portion thereof and at its end close to said handle portion being configured to render it subject to thumb manipulation from a grasping hand in place on said wrench, said control rod means movable substantially longitudinally to rotate said ratchet pawl to achieve the aforesaid conditions of engagement and disengagement thereof with respect to said ratchet gear.

4,300,414
TORQUE AMPLIFIER
Jon P. Boudreau, Gloucester; Marvin A. Biren, Chestnut Hill, and Robert J. Maselek, Framingham, all of Mass., assignors to The Charles Stark Draper Laboratory, Inc., Cambridge, Mass.
Filed Apr. 3, 1978, Ser. No. 892,764
Int. Cl.³ B25B *13/52*
U.S. Cl. 81—64 **11 Claims**

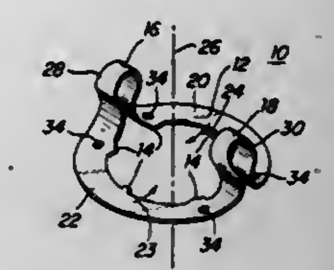

1. A tool for engaging and disengaging a connector with a torque amplifier including a generally perimetrical member for rotation about a central axis; means for inwardly biasing said perimetrical member; connector gripping means carried by said perimetrical member and inwardly directed by said means for biasing; and at least one salient portion extending from said perimetrical member generally in the direction of the axis of rotation of said perimetrical member for increasing the applied torque, comprising: first and second juxtaposed jaws moveable relative to each other; means on each of said jaws for holding said perimetrical member; and actuator means for moving said jaws away from and toward each other to spread said perimetrical member and permit it to retract, respectively.

4,300,415
ADJUSTABLE TOGGLE LOCKING CLOSED-END WRENCH
Tauno Salla, 10534 Penrose St., Sun Valley, Calif. 91352
Filed Mar. 20, 1980, Ser. No. 131,904
Int. Cl.³ B25B *13/18*
U.S. Cl. 81—128 **9 Claims**

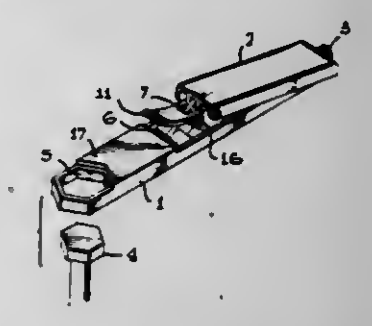

1. A wrench comprising:
an elongated frame comprising a first end having a fixed jaw portion and a second end having a threaded screw-receiving opening;
lever handle means having a link receiving aperture in a first end thereof and a screw-receiving aperture in a second end thereof;
a threaded adjusting screw extending through said screw-receiving aperture of said lever handle means and mating with said screw-receiving opening so as to pivotally mount said second end of said lever handle means to said second end of said frame;
a rectilinearly movable jaw member slidably mounted within said frame and disposed in opposition to said fixed jaw portion;
an elongated link member having first and second ends;
first connecting means pivotally coupling the first end of said link member to said link receiving aperture in said lever handle means;

second connecting means pivotally coupling the second end of said link member to said movable jaw member; and
means coupled to said link member for imparting an arcuate motion to one end thereof and thereby impart a translational movement to said movable jaw mamber.

4,300,416
KEY BLANK IMPRESSIONING TOOL
William D. Ross, Kansas City, Mo., assignor to William D. Ross Manufacturing Corporation, Kansas City, Mo.
Filed Oct. 15, 1979, Ser. No. 84,620
Int. Cl.³ B25B *9/00, 19/00;* **B21K** *13/00*
U.S. Cl. 81—463 **10 Claims**

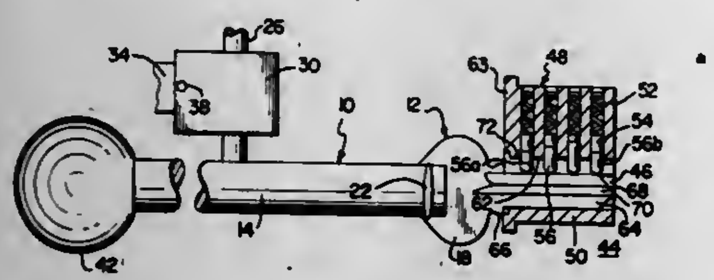

1. A key blank impressioning tool comprising:
an elongated rod having means at one end for connecting the same with the key blank and means at the other end for transmitting torque thereto while the key blank is in a lock and as the rod is hand manipulated;
a striking member for imparting repeated blows to said rod while torque is applied to said blank such as to produce indentations in the blank as the result of impact forces transmitted thereto from the rod;
a guide rigidly secured to the rod and extending laterally therefrom for reciprocably mounting the striking member on the rod; and
a manually operable handle having means at one end attaching the same to the striking member and means at the other end remote from said one end for operating said handle whereby the torque transmitting means of said rod is grasped in one hand of the user to apply torque to said blank while the operating means of said handle is grasped by the other hand of said user to strike light blows of such nature so as to create said indentations in one edge of said blank.

4,300,417
METHOD AND DEVICE FOR MACHINING GLASS AND VITREOUS MATERIAL AS WELL AS WORK-PIECE OF GLASS OR VITREOUS MATERIAL MACHINED ACCORDING TO THE METHOD
Johannes C. G. Tunissen, Rudolf, Brehan, Jan Haisma, and Jan D. B. Veldkamp, all of Eindhoven, Netherlands, assignors to U.S. Philips Corporation, New York, N.Y.
Filed Dec. 12, 1979, Ser. No. 102,716
Claims priority, application Netherlands, Dec. 18, 1978, 7812246
Int. Cl.³ B23B *1/00*
U.S. Cl. 82—1 C **12 Claims**

1. A method for machining glass and vitreous material comprising:
moving a workpiece of glass or vitreous material relatively to a turning tool, said workpiece being subjected to surface cutting by said turning tool,
heating a portion of said workpiece to achieve a viscosity substantially corresponding to the softening temperature at the surface of said workpiece, said step of heating including a step of longitudinally heating said workpiece to substantially the softening temperature by a first spread-out heat supply, and simultaneously locally heating the surface of said workpiece to be worked to a depth at least equal to the desired cutting depth by a second concentrated heat supply,
subsequently turning the softened surface of said workpiece by a single point turning tool, and
thereafter cooling said workpiece to ambient temperature.

6. A workpiece of glass or vitreous material formed by a method of moving the workpiece relatively to a turning tool for carrying out surface cutting, heating a portion of said workpiece in a two part technique by providing a spread heating supply and a spot heating supply on said portion, cutting a

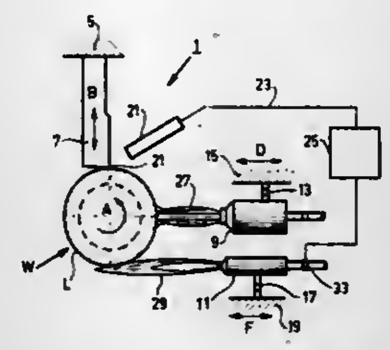

softened surface of said workpiece with a single point turning tool, and cooling the formed workpiece to an ambient temperature.

7. A device for machining glass or vitreous material comprising a rotatable workpiece holder, a tool holder providing a cutting tool which is adjustable with respect to said workpiece holder, means adjustable with respect to said workpiece holder for heating said workpiece by a first heating element providing a spread heat output and a second heating element providing a localized spot heat output, and means for moving said heating means relative to said workpiece holder and said tool holder.

4,300,418
TOOL TURRET MECHANISM
Nagle V. Gusching, Sidney, and Ted R. Wagner, New Bremen, both of Ohio, assignors to The Monarch Machine Tool Company, Sidney, Ohio
Filed Nov. 28, 1979, Ser. No. 98,291
Int. Cl.³ B23B *29/00*
U.S. Cl. 82—36 A **15 Claims**

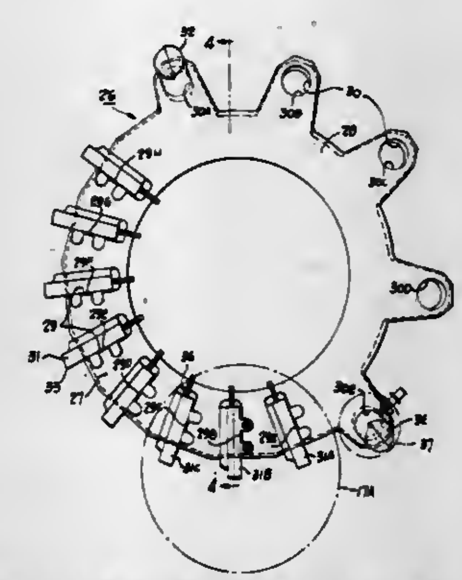

1. In a machine tool having a rotatable workpiece spindle with an axis, a turret mechanism comprising, in combination,
a turret,
means mounting said turret for rotation about an axis,
said turret having first and second different peripheral surface portions unitary with said turret,
a first plurality of adjacent OD turning tool mounting surfaces on said first surface portion,
a second plurality of adjacent ID turning tool mounting surfaces on said second surface portion,
one of said plurality of tool mounting surfaces being in a plane intersecting the other of said plurality of tool mounting surfaces,
and said second plurality of tool mounting surfaces being disposed with spacing angles therebetween greater than that between said first plurality of tool mounting surfaces, said first and second surface portions being constituted by first and second contiguous arcs together encompassing substantially 360° of the periphery of said turret.

4,300,419
HOLDER FOR ANNULAR WORKPIECES
Manfred Rottländer, Burscheid, Fed. Rep. of Germany, assignor to Goetze AG, Burscheid, Fed. Rep. of Germany
Filed Nov. 13, 1979, Ser. No. 93,929
Claims priority, application Fed. Rep. of Germany, Nov. 13, 1978, 2849148
Int. Cl.³ B23B *25/00, 33/00*
U.S. Cl. 82—44 **12 Claims**

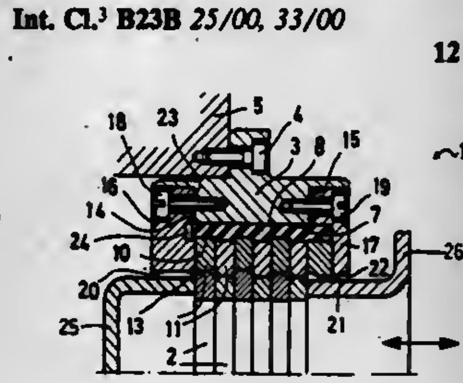

1. In a workpiece holder for clamping annular workpieces in a centered manner to permit working of one of the circumferential faces of the workpieces, which holder includes a basic element having a generally cylindrical support surface, and means for axially clamping the workpieces together, the improvement comprising: a plurality of segments arranged in groups, with the segments of each group distributed around the circumference of said cylindrical support surface in the form of a ring for radially clamping a respective workpiece and the groups of segments being disposed adjacent one another along the axis of said support surface, with the axial dimension of each group of segments being no greater than that of the respective workpiece which it is to clamp; and elastic support member connecting said segments to said basic element for permitting workpieces having respectively different radial wall thicknesses to be held by said segments in a uniformly centered manner; and two supporting elements mounted at said basic element and disposed at respective opposite sides of said plurality of segments for supporting said segments in the direction of the axis of said support surface, each said supporting element presenting an axial end face facing said segments, and one said supporting element having a circumferential groove formed in said end face of that said supporting element in the radial area of said elastic support member.

4,300,420
APPARATUS FOR CUTTING OF SHEET METAL SHEETS AND STACKING THE SEPARATED SHEET METAL SECTIONS
Eduard Haensi, Zofingen, Switzerland, assignor to Haemmerleg, Zofingen, Switzerland
Filed Mar. 17, 1980, Ser. No. 130,595
Claims priority, application Fed. Rep. of Germany, Mar. 15, 1979, 2910197
Int. Cl.³ B21D *43/28*
U.S. Cl. 83—92 **4 Claims**

1. In apparatus for cutting sheet metal sections and for stacking the separated sheet metal sections having a feed table for sheet metal, a fixed lower knife disposed at the rear edge of said table, an upper knife and a support means in the plane of said feed table for feeding sheet metal into the cutting location between said upper knife and lower knife, that improvement consisting of:
two side supports each having a predetermined thickness disposed above said lower knife for mounting said upper knife;
an adjustable lifting table having a flat surface for the support of the sheet metal cut at said cutting location;
means for shifting said lifting table in a direction perpendicular to the plane of said feed table;
a recess in one of two said two side supports adjacent said upper knife to adapt dropping of cut sections and stacking of a plurality of spaced apart stacks side by side in which the spacing between stacks is at least as great as the thickness of said one side support having said recess;
swivelable mounting means for said upper knife which adapts cutting of said sheet and dropping of the cut sheet onto a stack;

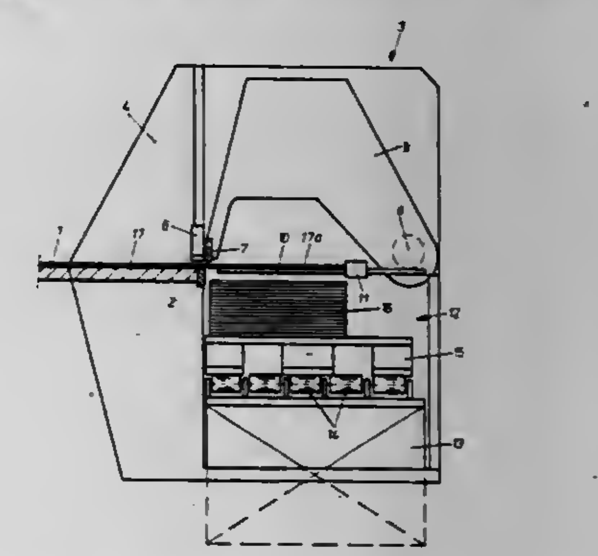

a support means on which stacks of cut sheets are provided by said stacking and transporting means;
said lifting table adapted to be lifted and lowered by a lifting mechanism through said recess and thereby adapting said lifting table for transverse shifting to the direction of the sheet metal feed from said feeding table to said upper and lower knives;
stacking and transporting means shifting transversely to the direction of said sheet metal feed towards said upper knife;
guiding means adjacent said lower knife for guiding said lifting table in a lower direction by the supporting mechanism in a location outside of one of the two said side supports whereby said lifting table is moved together with said stacking and transporting means for receiving a new stack of sections which have been cut by said cutting knives.

4,300,421
TRIM GUIDE DEVICE FOR SLITTER-SCORERS
Tadashi Yano; Yoshiaki Maruyama, both of Mihara, and Masahiro Toyota, Hiroshima, all of Japan, assignors to Mitsubishi Jukogyo Kabushiki Kaisha, Tokyo, Japan
Filed Mar. 19, 1980, Ser. No. 131,674
Claims priority, application Japan, Mar. 23, 1979, 54-37773[U]
Int. Cl.³ B26D *7/18*
U.S. Cl. 83—99 **4 Claims**

1. A trim guide device for slitter-scorers in which a corrugated board sheet transferred on guide tables is slit by rotary elements disposed above and below the corrugated board sheet, to be thereafter scored by similar rotary elements, comprising air ejection means disposed under the lower surface of those portions of said guide tables which are on the upstream

side with respect to the flow of the corrugated board sheet of said rotary elements, and directed to eject air under said lower

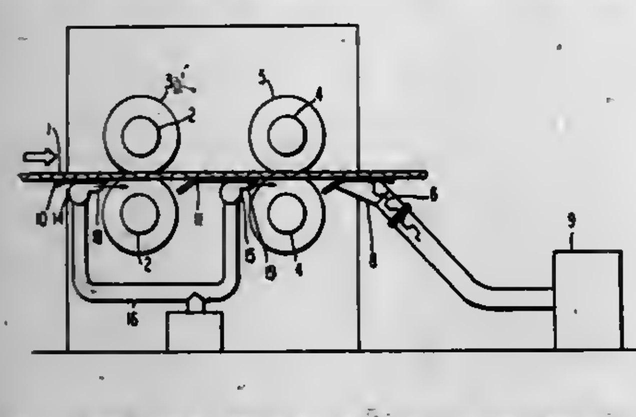

surface of said guide tables toward the downstream side of the flow of the corrugated board sheet.

4,300,422
APPARATUS FOR CUTTING FILAMENTARY MATERIAL
Jerry F. Potter, Seaford, Del., assignor to E. I. Du Pont de Nemours and Company, Wilmington, Del.
Filed May 27, 1980, Ser. No. 153,213
Int. Cl.³ D01G *1/04*
U.S. Cl. 83—99 **5 Claims**

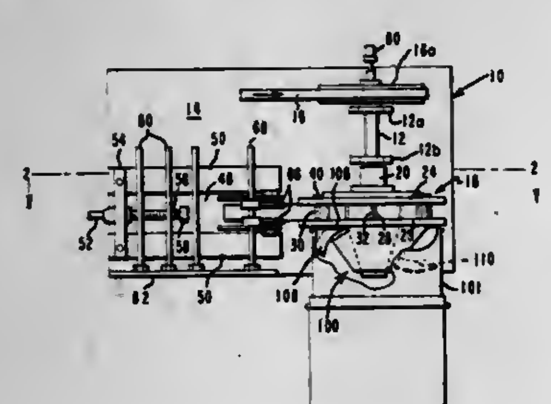

1. In an apparatus for cutting filamentary material into predetermined lengths comprising a cutting assembly including a plurality of knife edges secured to a reel having an upper and a lower mounting member and having means adapted to receive successive wrappings of filamentary material to be cut in contact with said plurality of knife edges and means for forcing said material between adjacent knife edges to a doffing point thereby severing said material into lengths of controlled dimensions, the improvement comprising: a cone attached at its base to said upper mounting member; a plurality of outwardly directed vanes attached to said cone, each pair of said vanes spanning a doffing point; and a plate spanning each pair of vanes, said plate extending in an inwardly curved direction from said upper mounting member near said blades to said cone.

4,300,423
APPARATUS FOR SEVERING AND SEPARATING CUP-SHAPED OBJECT SUPPORTS
Paul Price, Kirchlistrasse 1, 9010 St. Gallen, Switzerland
Filed Nov. 7, 1979, Ser. No. 91,196
Claims priority, application Switzerland, Nov. 8, 1978, 11475/78
Int. Cl.³ B26D *3/00;* **B01L** *11/00*
U.S. Cl. 83—165 **11 Claims**

1. Apparatus for severing and separating a plurality of cup-shaped object supports of plastic material, which are interconnectedly arranged on a support plate, characterised by a gripping means (4) for fixing the support plate (1) in the plate regions between the individual object supports, a severing means (5) for severing the object supports (2) and a distributor means (6) for distributing the severed object supports (2), which distributor means is arranged below the gripping means (4), and further characterised in that the gripping means has a perforated member (8) whose openings correspond in respect of diameter and geometrical arrangement to the cup-shaped object supports on the support plate (1) in respect of the outside diameter and the arrangement thereof, that a holding cover member (9) is secured to the gripping means for holding

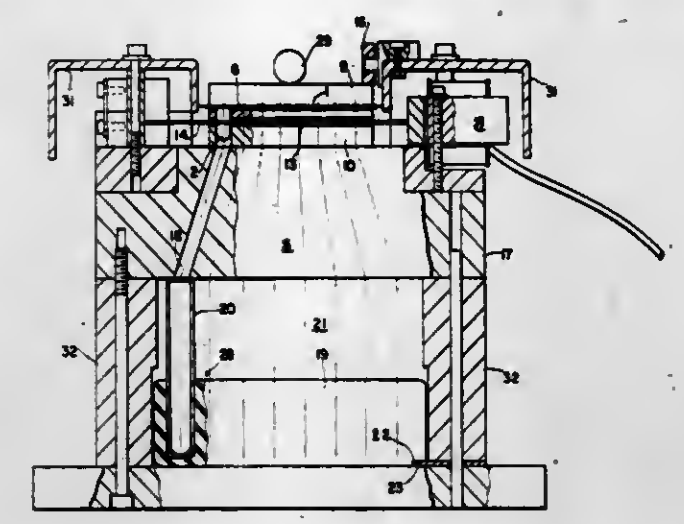

down the support plate (1) in the gripping means, that a perforated plate (10) is mounted at a spacing below the perforated member (8) and is provided with vertical bores for receiving the cup-shaped object supports (2), that the openings in the perforated member are arranged vertically above the bores in the perforated plate and are in alignment therewith, and that the severing means is arranged displaceably in the gap between the perforated member and the perforated plate.

4,300,424
CANDLE MANUFACTURING SYSTEM INCLUDING WICK CUTTING MEANS
Robert W. Flinn, Blytheville, Ark., and Roy D. Robinson, Greenville, Tenn., assignors to American Greetings Corporation, Cleveland, Ohio
Division of Ser. No. 948,086, Oct. 2, 1978, Pat. No. 4,170,860, which is a division of Ser. No. 777,429, Mar. 14, 1977, Pat. No. 4,131,415. This application May 21, 1979, Ser. No. 40,573
Claims priority, application Canada, Feb. 21, 1978, 297410
Int. Cl.³ C11C *5/02*
U.S. Cl. 83—374 **15 Claims**

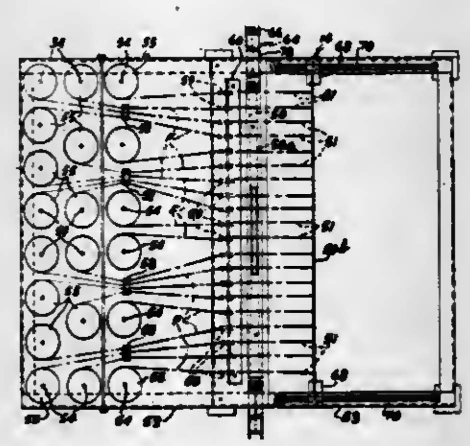

1. A wicking machine for producing candle wicks for use in the production of dipped candles at a wicking station in a candle production system comprising, a frame, means on said frame for movably mounting a supply of filamentary stock material, a cutter device movable transversely of said frame for cutting wick stock from the supply, to predetermined lengths, separate spaced elongated retainer means for suspending laterally spaced strands of the filamentary stock material on said frame and in suspended laterally spaced relation at the ends thereof, said retainer means extending transverse of said frame and being selectively and readily mountable on and removable from mounted condition on said frame, said cutter device coating with at least one of said retainer means generally adjacent the latter and being operable upon predetermined movement thereof to cut the suspended stands of filamentary stock material transversely of the lengthwise extent thereof, whereby certain of said retainer means may be removed from said frame and with the formed candle wicks secured at their ends thereto can be mounted on a carrier rack with such wicks being disposed in generally U-shaped formed by placing a tensioning weight intermediate the held ends of the formed and suspended candle wicks, the other of said retainer means being movable relative to the frame from its initial transverse position on said frame to another transverse position on said frame preparatory to cutting another batch of the filament stock strands secured to said other retainer means.

4,300,425
FLOOR OR BENCH MOUNTED CONDUIT CUTTING DEVICE
Glenn A. Wozniak, Chagrin Falls; Robert R. Rady, Strongsville, and Harold T. Pate, Solon, all of Ohio, assignors to Indian Head Inc., New York, N.Y.
Filed Mar. 1, 1979, Ser. No. 16,507
Int. Cl.³ B23D *17/08*
U.S. Cl. 83—468 **25 Claims**

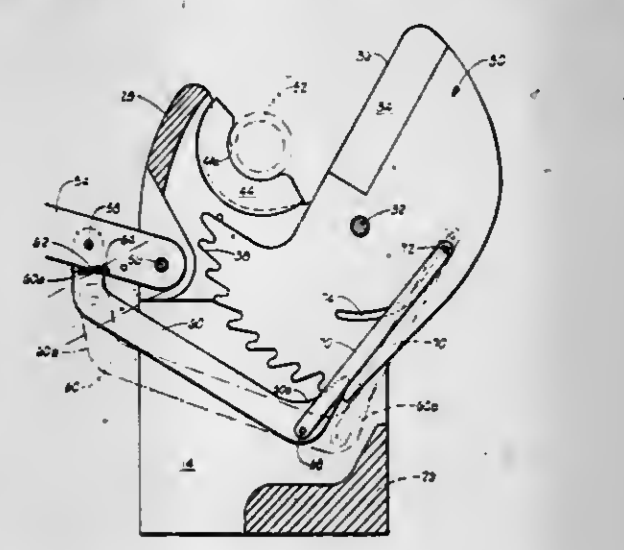

1. A conduit cutting device comprising:
a base;
a housing having a side and secured to and projecting upwardly from said base, said housing comprising:
a pair of opposed, substantially parallel vertically extending side plates separated by a vertically extending slot between the upper portions of the side plates, and defining a mechanism chamber between the lower portions of the side plates; and
means interconnecting the side plates; a blade element pivotally supported between the side plates movable in said slot, said blade including:
a plurality of ratchet teeth along a first side of said blade element;
a cutting edge along another side of said blade element spaced from said first side; and
a slot through the blade element;
an operating handle pivotally connected to the housing at a location spaced from the pivotal axis of the blade element;
an operating mechanism interconnecting the operating handle with the blade element to pivot the blade element about its axis when said operating handle is pivoted about its pivotal axis, said operating mechanism including:
means for engaging said ratchet teeth in consecutive sequence upon repetitive pivotation of said operating handle; and
indexing means connected between said engaging means and the slot in said blade element for alternately guiding said engaging means to a position of engagement between two adjacent ratchet teeth upon pivotation of said operating handle in one direction, and then guiding said engaging means to a position of alignment with a different pair of adjacent ratchet teeth upon pivotation of said operating handle in a direction opposite said one direction of pivotation thereof; and
means on said side plates for supporting a tubular conduit in a position to be cut through transversely by the cutting edge of said blade element when said blade is pivoted in one direction about its pivotal axis.

4,300,426
POWER MITER SAW
Paul L. Weaver, Rte. 6, Box 182, Sequim, Wash. 98382
Filed Apr. 16, 1979, Ser. No. 15,728
Int. Cl.³ B27B *5/20;* **B23D** *45/14*
U.S. Cl. 83—471.3 **3 Claims**

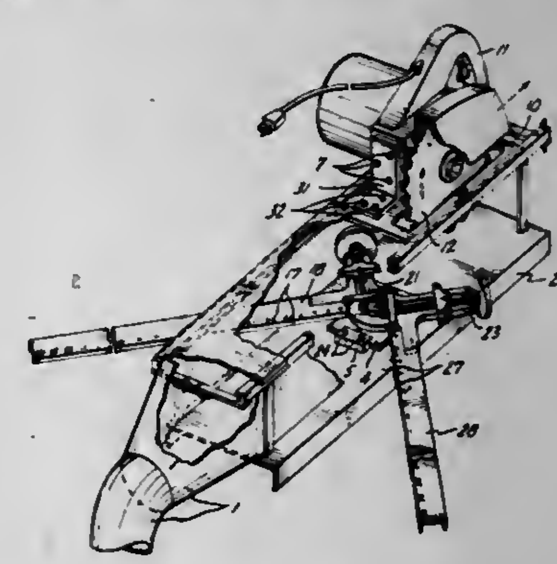

1. A power miter saw comprising:
a base plate;
a plurality of short legs mounted atop said base plate;
a pair of parallel slotted slide rails mounted atop said short legs such that said slots in said pair of slotted slide rails face one another;
a slide plate mounted in said slots in said parallel slotted slide rails for movement along a linear path of travel above said base plate;
a vice mounted atop said base for holding elongate material to be cut, said vice lying beneath said linear path of travel of said slide plate so as to be passed over when said slide plate moves along said linear path of travel, said vice including a pair of independent gripping means for gripping elongate objects to be cut and a pair of rules, one of said rules being associated with each of said gripping means and lying parallel to the longitudinal axis of an object gripped by said gripping means;
a power driven disc-type saw; and,
attachment means for attaching said power driven disc-type saw to said slide plate such that the plane of said disc-type saw of said power driven disc-type saw lies parallel to said linear path of travel of said slide plate, said disc-type saw extending downwardly from said slide plate, said attachment means including alignment means for aligning said disc-type saw between said pair of independent gripping means, said alignment including a plurality of holes and fasteners.

4,300,427
THREE-KNIFE TRIMMER

Horst Rathert, Minden, Fed. Rep. of Germany, assignor to Rabdener Maschinenfabrik August Kolbus GmbH & Co. KG, Wesphalia, Fed. Rep. of Germany
Filed Nov. 29, 1979, Ser. No. 98,650
Claims priority, application Fed. Rep. of Germany, Dec. 7, 1978, 2852878
Int. Cl.^{3} B26D *1/09, 1/11*
U.S. Cl. 83—519 13 Claims

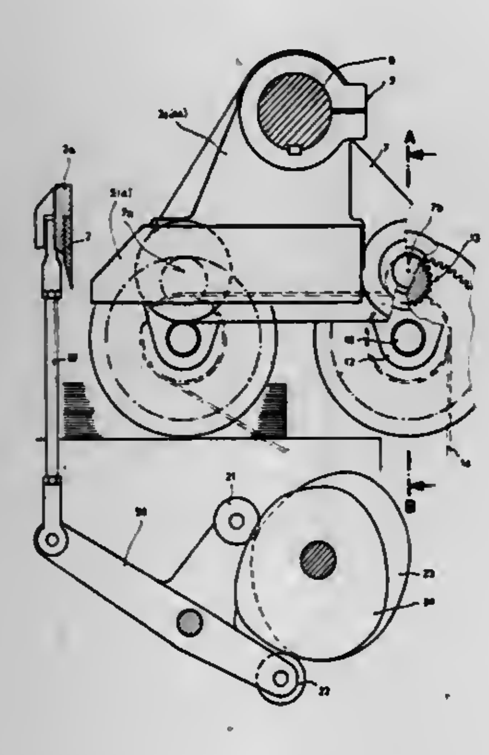

1. Apparatus for trimming edges of a stack of papers positioned upon a cutting table comprising:
side knife means, said side knife means including at least a first cutting blade having a linear cutting edge;
front knife means said front knife means including a second cutting blade having a cutting edge oriented transversely with respect to the cutting edge of said first cutting blade;
first moveable support means for said side knife means;
second moveable support means for said front knife means;
first drive means, said first drive means causing said first support means to move in a first direction from a starting position whereby said side knife means is brought into contact with the stack of paper to produce the desired trimming of at least one side edge thereof, said first drive means further causing said first support means to move in a second direction after the desired trimming is produced, whereby said side knife means is returned to its starting position, said first and second directions following a multi-directional orbital path; and
second drive means, said second drive means causing said second support means to move in a direction whereby said front knife means is brought into contact with the stack of paper to produce the desired trimming of the front edge thereof, said second drive means causing said second support means to move simultaneously and in synchronism with the movement of said first support means, said second drive means causing said second support means to move said front knife means into contact with the stack of paper subsequent to said side knife means trimming said side edge of the stack of papers as said first support means begins to move in said second direction whereby said trimming produced by said front and said side knife means is performed with a small phase offset.

4,300,428
CHAIN SAW MILL

Dennis R. Woodland, Rte. #3, Parma, Id. 83660
Filed Mar. 24, 1980, Ser. No. 132,827
Int. Cl.^{3} B27B *17/00*
U.S. Cl. 83—574 11 Claims

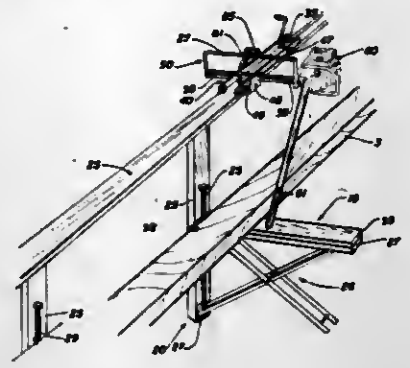

1. Lumber making apparatus for the cutting of wood by an attached chain saw comprising:
a frame;
a longitudinal guide member mounted on said frame;
a carriage mounted on said guide member, said carriage adapted to travel to and fro on said guide member; and
a chain saw adjustment control assembly mounted on said carriage, said control assembly including shaft means rotatably and laterally slidably received in said carriage, said shaft means including chain saw attachment means adjacent a terminal end thereof; first lock means operable to secure said shaft in a laterally selected position; and second lock means operable to secure said shaft in selected rotational position whereby the cutting bar of an attached chain saw may be rigidly secured at a preselected angulation and lateral position relative to said carriage.

4,300,429
CUTTER ELEMENT

Roger A. Brown, Tigard, Oreg.; William F. Clyde, American Falls, Id., and Glenn D. Galusha, Moses Lake, Wash., assignors to AMFAC Foods, Inc., Portland, Oreg.
Division of Ser. No. 836,050, Sep. 23, 1977, abandoned. This application Dec. 4, 1978, Ser. No. 965,946
Int. Cl.^{3} B26D *1/553*
U.S. Cl. 83—651.1 11 Claims

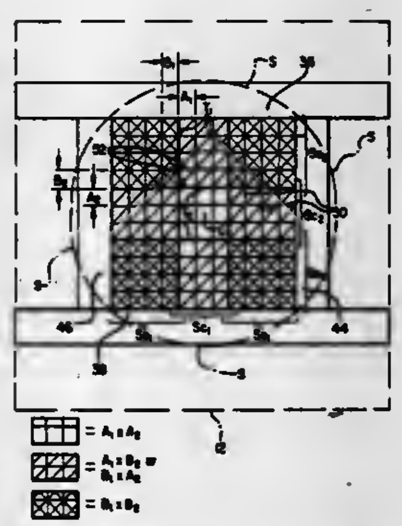

1. In a cutter device for cutting a potato, having a higher starch containing solids content in its outer portions than in its inner portions, into elongated segments:
two series of parallel blades disposed at right angles to each other;
each of said series including a pair of transition blades one of which is located on each side of the series midpoint at a

position intermediate of said midpoint and one of said outer ends;
each of said series comprising a center subseries including said transition blades and all blades located therebetween and also comprising two outer subseries each of which includes one transition blade and all blades located outwardly thereof, the edges of successive blades in said center subseries being spaced equally and the edges of successive blades in each of said outer subseries of the same series being spaced equally at a greater distance apart than are the edges of blades in said center subseries of the same series so that the ratio of segment surface area to volume is generally inversely proportional to the distance of a segment from the center of a potato, among segments cut from such a potato by said blades, whereby variations in segment texture, as measured by the amount of gelatinized starch per segment, are minimized and segments of substantially uniform texture are obtained, when the segments of such a potato are blanched and cooked together;
the outermost blades of said two series being positioned to remove exterior slab portions of said product, said outermost blades being angled outwardly from the longitudinal axis of said device in the direction of potato feed;
the outermost blades of said two series having cutting edges positioned adjacent the infeed end of said cutter device and the blades inward of said outermost blades having edges which successively recede from said infeed end;
said blades, other than the outermost blades of each said series, being angled outwardly in the direction of potato feed with respect to the longitudinal axis of said cutter device.

4,300,430
CHORD RECOGNITION SYSTEM FOR AN ELECTRONIC MUSICAL INSTRUMENT

Angelo A. Bione, Chicago; Robert J. Sehnert, Palatine, and Horace E. Taylor, Skokie, all of Ill., assignors to Marmon Company, Chicago, Ill.
Continuation-in-part of Ser. No. 804,739, Jun. 8, 1977, Pat. No. 4,144,788. This application Jun. 7, 1978, Ser. No. 913,358
The portion of the term of this patent subsequent to Mar. 20, 1996, has been disclaimed.
Int. Cl.^{3} G10H *1/38*
U.S. Cl. 84—1.01 25 Claims

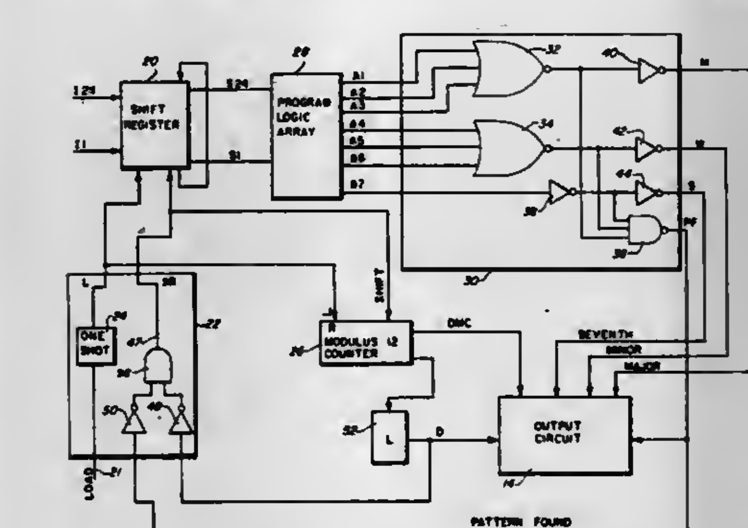

1. A chord recognition system providing a plurality of output recognition signals for use in an electronic organ having a plurality of lines with keying data and an output circuit responsive to at least one of said recognition signals, said chord recognition system comprising:
storage means for receiving said keying data and having a plurality of output signals corresponding to said keying data;
pattern identification means responsive to said plurality of output signals of said storage means for recognizing the relationship between said keying data and a normalized chord pattern;
said pattern identification means having a chord pattern output signal and a pattern found output signal if said keying data matches a normalized chord pattern;
control ciruit for providing a shift signal to said storage means for repositioning said keying data;
calculation means responsive to said shift signal for providing a data move output signal representing the number of shifts of said storage means; and,
said control circuit responsive to said pattern found output signal of said pattern identification means for disabling said storage means and said calculation means.

4,300,431
PITCH EXTRACTOR CIRCUIT

Paul DeRocco, 74 Union St., Bridgewater, Mass. 02324
Continuation of Ser. No. 914,706, Jun. 12, 1978, abandoned. This application Dec. 14, 1979, Ser. No. 103,638
Int. Cl.^{3} G10H *1/06, 3/18*
U.S. Cl. 84—1.01 1 Claim

1. A pitch extractor for an electronic musical instrument, comprising:
A. an envelope generator connected to receive a waveform whose pitch is to be detected and providing a signal corresponding to the envelope thereof;
B. a gate generator providing a gate output whenever said envelope generator signal rises above a predetermined level;
C. peak detection means providing outputs indicative of the successive passage of said signal through predetermined levels;
D. gating means responsive to the output of said peak detection means to provide a pulse train indicative of the rate at which said signal passes through successive levels;
E. a counter operative in response to output from said gate generator connected to receive said pulse train for providing a count indicative of the period of said pulse train; and
F. means providing an analog control voltage corresponding to said count for controlling said electronic musical instrument therefrom.

4,300,432
POLYPHONIC TONE SYNTHESIZER WITH LOUDNESS SPECTRAL VARIATION

Ralph Deutsch, Sherman Oaks, Calif., assignor to Kawai Musical Instrument Mfg. Co., Ltd., Hamamatsu, Japan
Filed Apr. 14, 1980, Ser. No. 139,908
Int. Cl.^{3} G10H *1/00*
U.S. Cl. 84—1.01 11 Claims

1. In a musical instrument having one or more tone generators in which a plurality of data words corresponding to the amplitudes of a corresponding number of evenly spaced reference points defining the waveform of one cycle of an audio signal are computed and in which the data words are transferred sequentially from a note register to a digital-to-analog converter at a rate proportional to the pitch of the tone being

generated apparatus for generating tones having a variable spectral content comprising;

a first memory means for storing a master data set comprising said plurality of data points to be thereafter read out,

a second memory means for storing a set of transform data values,

a signal generating means for generating a control signal,

a first addressing means responsive to said control signal whereby said transform data values are accessed from said second memory means and written into said first memory means during each computation cycle of a sequence of computation cycles,

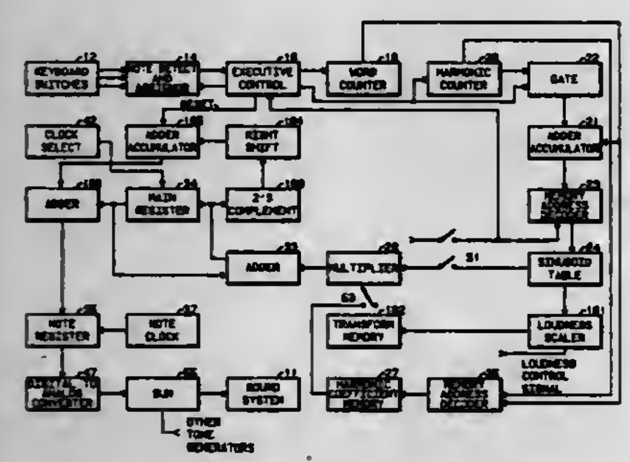

a third memory means for storing data to be thereafter read out,

a transfer data means wherein said master data set data values stored in said first memory means are translated in magnitude to produce a zero average value and are transferred to be stored in said third memory means,

a reading means for sequentially and repetitively reading out data stored in said third memory means, and

means for producing musical signal waveshapes from data words read out by said reading means.

4,300,433

HARMONY GENERATING CIRCUIT FOR A MUSICAL INSTRUMENT

Wilford R. Schreier, Bensenville, and Horace E. Taylor, Skokie, both of Ill., assignors to Marmon Company, Chicago, Ill.

Filed Jun. 27, 1980, Ser. No. 163,714

Int. Cl.^{3} G10H *1/36, 1/46*

U.S. Cl. 84—1.17 **5 Claims**

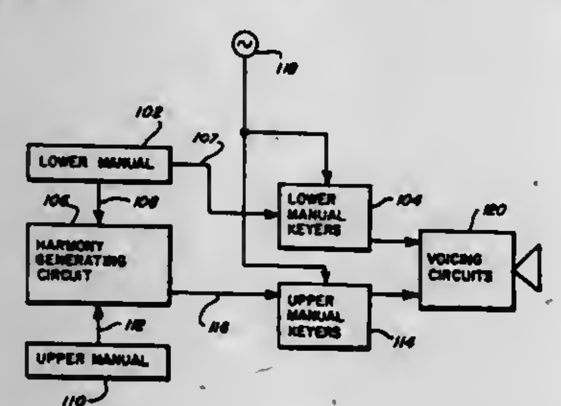

1. A harmony generating system for use in an electronic organ having a lower manual for generating lower manual keying signals and an upper manual for generating upper manual keying signals, said harmony generating system comprising:

first means including output terminals connected to said upper manual for coupling said upper manual keying signals to said output terminals;

second means connected to said upper and lower manuals and to said first means for generating harmony signals in response to said upper manual keying signals and said lower manual keying signals, said harmony signals directly corresponding to said lower manual keying signals, being one octave above said upper manual keying signals and being provided on said output terminals; and

third means connected to said second means for controlling the relative magnitude of said upper manual keying signals and said harmony signals such that said upper manual keying signals are greater in magnitude than said harmony signals to accentuate the musical notes played in response to said upper manual keying signals.

4,300,434

APPARATUS FOR TONE GENERATION WITH COMBINED LOUDNESS AND FORMANT SPECTRAL VARIATION

Ralph Deutsch, Sherman Oaks, Calif., assignor to Kawai Musical Instrument Mfg. Co., Ltd., Hamamatsu, Japan

Filed May 16, 1980, Ser. No. 150,493

Int. Cl.^{3} G10H *1/02*

U.S. Cl. 84—1.19 **11 Claims**

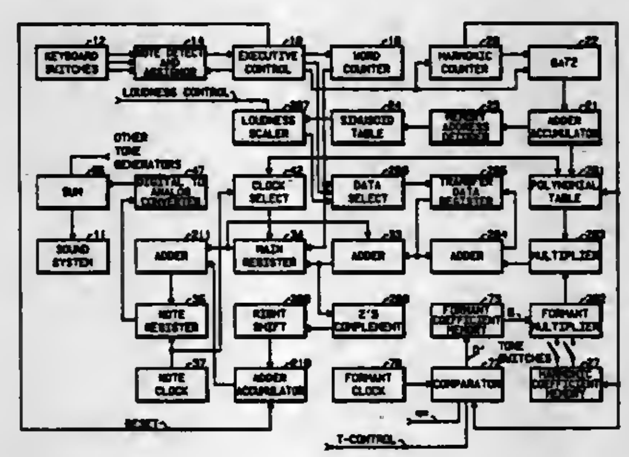

1. In a musical instrument having one or more tone generators in which a plurality of data words corresponding to the amplitudes of a corresponding number of evenly spaced points defining the waveform of an audio tone are computed and in which the data words are transferred sequentially from a note register to a digital-to-analog converter at a rate proportional to the pitch of the tone being generated, apparatus for generating tones having a variable spectral content comprising;

a first means for computing transfer data values during the first subcomputation cycle of a sequence of computation cycles each comprising a first and second subcomputation cycle,

a first memory means for storing said transfer data values to be thereafter read out,

a second memory means for storing a master data set comprising a plurality of data points to be thereafter read out,

a signal generating means for generating a control signal,

a first addressing means responsive to a control signal whereby said transfer data values are read out from said first memory means and stored in said second memory means during said second subcomputation cycle,

a note register means for storing data values to be thereafter read out,

a data transfer means whereby said master data set is read out from said second memory means and wherein said master data points are translated in magnitude to produce a translated master data set having a zero average value which is stored in said note register means,

a second addressing means for sequentially and repetitively reading out data stored in said note register means, and

means for producing musical signal waveshapes from data read out from said note register means.

4,300,435

SYNTHESIZER FOR ORGAN VOICES

George F. Schmoll, III, Dolton, Ill., assignor to CBS Inc., New York, N.Y.

Continuation of Ser. No. 72,969, Sep. 6, 1979, abandoned. This application Nov. 24, 1980, Ser. No. 209,438

Int. Cl.^{3} G10H *1/02*

U.S. Cl. 84—1.19 **8 Claims**

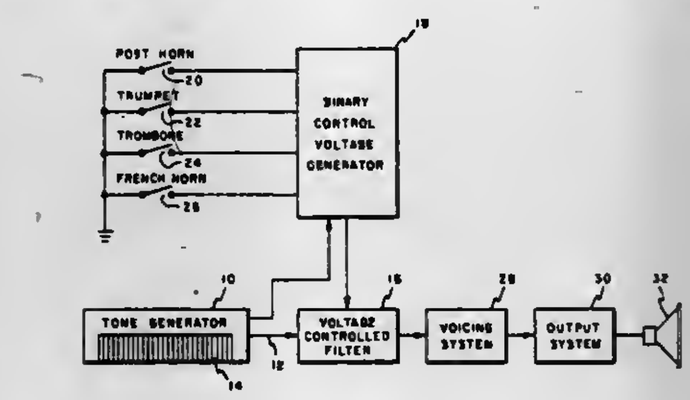

1. In an electronic organ which includes:

a tone signal generating system for generating tone signals corresponding to notes in a musical scale; an output system for translating tone signals into audible musical tones; a keyboard having a plurality of keys, each identified with a particular note of the musical scale; and at least four stop tablets, each identified with a different organ voice; a circuit for synthesizing a selectable one of a plurality of different organ voices, comprising:

voltage controlled sharp cutoff low-pass filter circuit means connected to couple player-selectable tone signals from said tone signal generating system to said output system, said filter circuit means having a cutoff frequency controllable over a range between a first frequency and a second higher frequency in response to variations in the duty cycle of a control signal comprising a sequence of pulse width modulated pulses, and a rapid rate of roll-off above the cutoff frequency,

means including said at least four stop tablets for generating responsively to player actuation of a selected one or more of said at least four stop tablets a selected one of a plurality of different actuating signals each of which is associated with one and only one of said plurality of organ voices and each of which is uniquely identified by one of a plurality of different 4-bit binary words selectable in accordance with which one or more of said at least four stop tablets are actuated, and

control signal generator means for applying a sequence of pulse width modulated pulses to said filter circuit means, said control signal generator means including means responsive to a selected actuating signal for controlling the width of said pulses to cause said filter circuit means to have a cutoff frequency appropriate to the tone quality of the organ voice determined by the stop tablets actuated by the player.

4,300,436

BLIND CAPTURE SYSTEM

Gary R. Fritz, Ferdinand, and John W. Robinson, Jasper, both of Ind., assignors to Kimball International, Inc., Jasper, Ind.

Filed Feb. 14, 1980, Ser. No. 121,406

Int. Cl.^{3} G10B *3/10*

U.S. Cl. 84—345 **30 Claims**

1. In a keyboard musical instrument for producing tones including means for controlling the tones produced by the instrument under the control of a plurality of player operated switches, said switches having respective outputs electrically connected to said means for controlling the tones, the improvement being a blind capture system comprising:

a programmable memory capable of storing data representative of the composite states of said switches, said memory having alternative write and read modes,

a bidirectional data bus means having lines connected respectively to said outputs carrying electrical signals corresponding to electrical states of respective said switches,

memory input means interposed between said data bus means and said memory for writing into a section of said memory, when the memory is in the write mode, preset data representative of the states of said switches, said preset data corresponding to the electrical signals present on said data bus means,

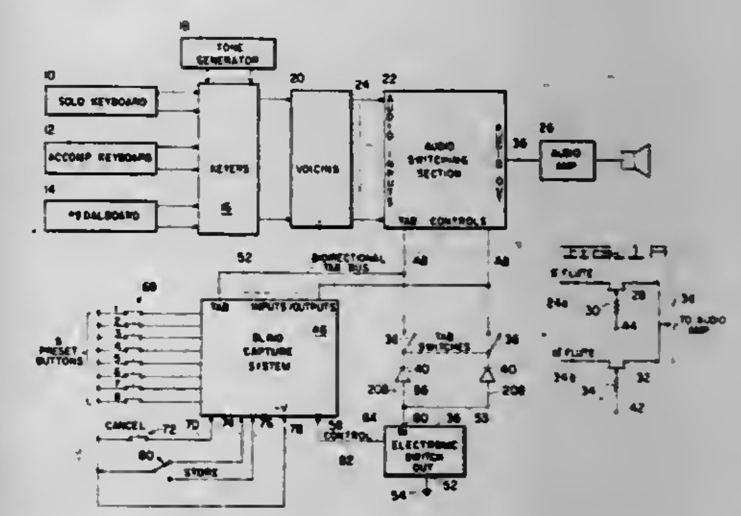

memory output means interposed between said memory and said data bus means for reading out of said memory, when the memory is in the read mode, said preset data and placing on said data bus means electrical signals corresponding to the preset data read out,

the electrical signals on said data bus means when said memory is in the write mode corresponding to actual states of said switches, and

means for isolating said switches from their said outputs when the memory is in the read mode.

4,300,437

SECTIONALIZED MUSICAL DRUMS

Fred D. Hinger, Leonia, and William D. Hinger, River Vale, both of N.J., assignors to Hinger Touch-Tone Corp., Leonia, N.J.

Filed Jul. 13, 1977, Ser. No. 815,405

Int. Cl.^{3} G10D *13/02*

U.S. Cl. 84—411 R **5 Claims**

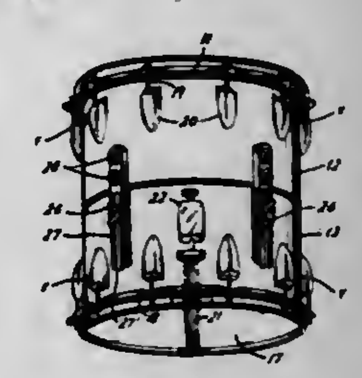

3. A sectionalized musical drum comprising two separate drum sections, each having a body wall of generally circular cross-sectional contour, positioned on a common axis, each of said drum sections having its outer end substantially enclosed and at least one of them being enclosed by a drum head adapted to be beaten upon, said drum sections being open at their ends presented toward each other and each having a generally circular edge confronting that of the other, the two drum sections being relatively shiftable toward and away from each other along said common axis to define a variable peripheral open gap between said edges providing intercommunication between the interior of both of the drum sections and the ambient air, the drum sections also being shiftable toward each

other to bring said circular edges into engagement with each other and thereby close said gap and thus preclude intercommunication between the interior of the drum and the ambient air, and mechanism for mounting and interconnecting said drum sections in position on said common axis comprising a plurality of connection elements at angularly spaced points about the drum sections, each of said connection elements being elongated and being connected with the wall of one of the sections and projecting beyond the confronting edges of the sections to overlie the wall of the other section with said circular confronting edges of the sections either in engagement with each other or spaced from each other, the projecting portion of each connection element being movable to different positions with respect to the wall of said other section when the two sections are relatively shifted along said common axis, and said mounting and interconnecting mechanism further including fastening means connected with the wall of said other drum section and cooperating with the projecting portion of one of said elements for engaging and securing the said portion in any relatively shifted position with respect to the wall of said other drum section, the fastening means comprising a releasable and engageable device accessible externally of the drum sections providing for release and engagement of the fastening means either when the drum sections are positioned with said confronting edges in engagement with each other or alternatively when the drum sections are spaced from each other.

4,300,438
RESINOUS DRUMSTICK
Richard A. Handal, 2904 Harris Ave., Wheaton, Md. 20902
Filed Aug. 29, 1980, Ser. No. 182,634
Int. Cl.[3] G10D *13/02*
U.S. Cl. 84—422 S **5 Claims**

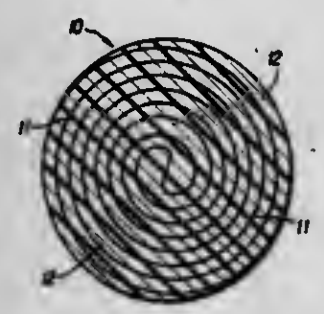

1. A resinous drumstrick comprising a rolled woven cotton fabric impregnated with phenolic resin.

4,300,439
BALLISTIC TOLERANT HYDRAULIC CONTROL ACTUATOR AND METHOD OF FABRICATING SAME
William G. Degnan, Huntington, and Robert A. Selleck, Trumbull, both of Conn., assignors to United Technologies Corporation, Hartford, Conn.
Filed Sep. 10, 1979, Ser. No. 73,832
Int. Cl.[3] F01B *1/00;* **F16J** *11/04, 15/18*
U.S. Cl. 92—146 **26 Claims**

1. An hydraulic actuator comprising:
(A) a movable member,
(B) a hybrid housing enveloping said movable member and cooperating therewith to define at least one hydraulic actuating fluid chamber so that the movable member is movable with respect to the housing in response to hydraulic pressure in said chamber and including:
(1) an outer wall of selected material and wall thickness "t" to satisfy actuator fatigue requirements,
(2) a central sleeve of selected material snugly fitted into said outer wall and being of selected wall thickness, and,
(3) an inner wall of selected wall thickness snugly sleeved into said central sleeve and being of selected hardness to be wear resistant to the wear of said movable member within said housing, and so that impacting or impacting and penetrating of the outer wall by a threat projectile of diameter D generates stress waves therein of sufficient intensity to be imparted therefrom into the central sleeve to locally disintegrate and clear the central sleeve portion in the area of projectile impact, and further so that said inner wall is of selected fracture toughness strength, thickness, and residual stress so as to be cleared together with said cleared central sleeve portion, and still further so that projectile diameter D forms a ratio t/D with outer wall thickness t closer to ½ than

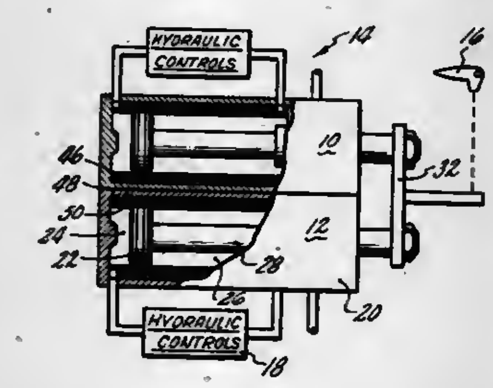

any other threat projectile, and so that petals formed in the outer wall by the projectile passing therethrough are of less depth than the combined wall thickness of said central sleeve and said inner wall and will occupy a void left by said locally cleared central sleeve and inner wall portions, so that said movable member may move within said housing following such projectile damage, and
(4) means to actuate said movable member within said housing following the occurrence of such projectile damage.

4,300,440
VENTILATING HATCH ASSEMBLY
John W. Holter, 2701 - 13th St., St. Petersburg, Fla. 33704
Filed May 23, 1977, Ser. No. 799,199
Int. Cl.[3] E05D *15/50*
U.S. Cl. 98—37 **7 Claims**

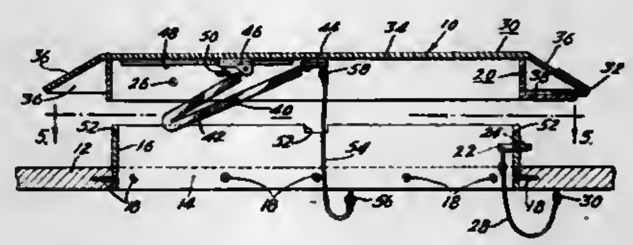

1. A ventilating and escape hatch assembly for selectively providing ventilation to the space below a substantially horizontal deck or the like as well as an escape passage therefrom, comprising a square opening in the deck, a coaming around said opening having a square plan configuration, said coaming extending substantially above the deck and being permanently secured thereto in water-tight sealed relation therewith, a square hatch frame demountably disposed in cooperative mating relation with said coaming, said coaming and hatch frame having accurately square dimensions permitting the selective 90° or 180° repositioning of said frame with respect to said coaming, a hatch cover pivotally attached along one edge thereof to one side of said frame for selective rotation with respect thereto about a substantially horizontal axis, and quick release means actuatable from below said deck for detachably securing said frame to said coaming thereby permitting said frame and attached cover to be quickly removed to provide an escape passage or to be repositioned with respect to said coaming for optimal ventilation.

4,300,441
BASEBOARD DISTRIBUTION HOT AIR HEATING SYSTEM
Robert H. Dicks, Rte. 3, Box 433A, Lodi, Wis. 53555
Filed Oct. 31, 1979, Ser. No. 89,918
Int. Cl.[3] F24F *13/02*
U.S. Cl. 98—40 C **7 Claims**

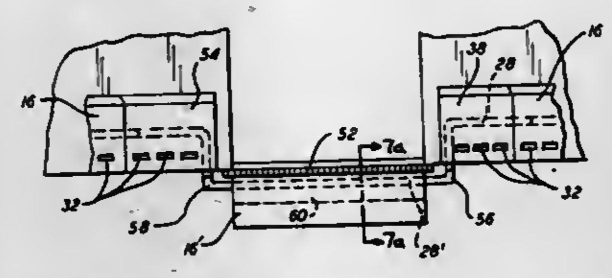

1. A system for distributing hot air from a central heating plant to one or more rooms, said system comprising:
(a) a plurality of baseboard heat distribution units arranged in continuous, side-by-side relation against each outside wall of the room to be heated, each of said units including:
(i) an elongated, hollow enclosure having front, back, top and bottom walls and open ends;
(ii) said enclosure front wall including at least one first opening near said enclosure bottom all representing the sole means through which said enclosure communicates with the room to be heated, said first opening representing a substantial portion of the length of said enclosure;
(iii) a generally tubular conduit attached to the inner surface of one of said front and back walls and extending longitudinally of said enclosure between a first terminal end spaced inwardly of one open end of said enclosure and a second terminal end extending outwardly from the other open end of said enclosure, said conduit being a small fraction of the cross section of said enclosure;
(iv) said open ends of said enclosure including portions adapted for mating engagement with adjacent enclosure ends on each side, and said first and second terminal ends of said conduit including means for mating in sealed engagement the first terminal end of one unit with the second terminal end of an adjoining unit;
(v) said conduit including at least one second opening through which said conduit communicates with the interior of said enclosure, said second opening representing a substantial portion of the length of said conduit and being arranged at a vertical level substantially above said first opening, whereby warm air passing through said second opening rises within said enclosure before passing through said first opening;
(b) duct means for receiving hot air from the central heating plant;
(c) means connecting said duct means with said conduit of at least one of said plurality of units for direct transmission of hot air from said duct means to the interior of said conduit, and thence through said second opening to the interior of said enclosure and through said first opening to the room to be heated;
(d) said conduit and enclosures of each of said units being connected for direct communication with the conduit and enclosures, respectively, of adjoining units in a continuous path; and
(e) an intermediate unit installed below floor level of the room being heated and having an intermediate enclosure defined by front, back, side and bottom walls and an open grille-work top substantially flush with the floor, an intermediate conduit extending from end to end of said intermediate enclosure and having at least one opening through which the interior of said intermediate conduit communicates with the interior of said intermediate enclosure, and means connecting the ends of said intermediate conduit to the ends of said conduits of adjacent units above floor level on each side thereof for communication in a direct, continuous path.

4,300,442
COFFEE MAKER
Ernest N. Martin, Lynwood, Calif., assignor to Societe d'Assistance Technique pour Produits Nestle SA, La Tour-de-Peilz, Switzerland
Filed Apr. 28, 1980, Ser. No. 144,695
Int. Cl.[3] A47J *31/40, 31/50*
U.S. Cl. 99—289 R **18 Claims**

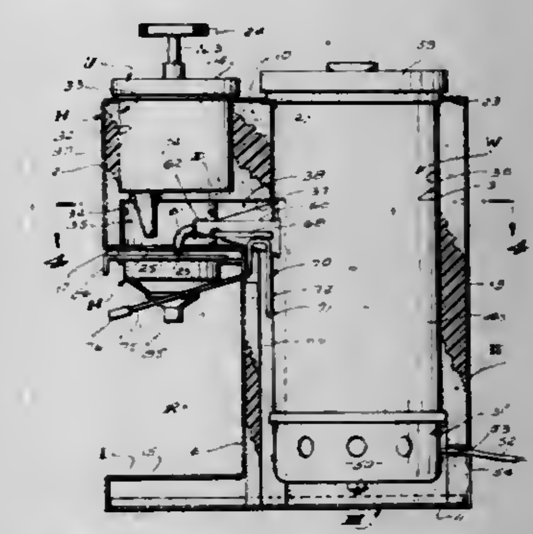

1. A coffee making machine comprising an elongate vertical hot water supply unit with an upwardly opening tank, resistance heater means at the lower end of the tank and including a power cord extending from the machine to a suitable power source and a lid removably engageable over the upper end of the tank, water dispensing means including a forwardly opening water outlet port in the tank, a normally closed valve with inlet and outlet ends, said inlet end communicating with the outlet port, a downwardly opening water discharge spout communicating with said outlet end and a manually engageable operating lever projecting from the valve, an elongate vertical granular coffee concentrate dispensing unit comprising an upwardly opening concentrate supply body, a cover removably engaged over the body, a downwardly projecting concentrate discharge chute depending from the body and arranged to occur laterally of the spout, concentrate metering means in the body to move measured volumes of concentrate to said duct for discharge therefrom and operating means for the metering means including a manually engageable handle accessible at the exterior of the body, a funnel-like mixing unit with an open top below and receiving water and concentrate from the spout and the duct and having a downwardly opening coffee discharge opening below which a coffee beverage receptacle is arranged, a core of heat resistive and heat insulating foam plastic resin with a bore in which the water unit is positioned, a recess in heat insulated relationship from the bore in which the dispensing unit is positioned and a downwardly opening cavity in heat insulated relationship from the bore and the recess and into which the nozzle and duct project, a thin-walled case about the core having a recess below the cavity to accommodate the mixing unit and a coffee receptacle arranged below the mixing unit, an opening communicating between the cavity and the mixing unit and openings at the upper ends of said tank and body; said lid, cover, operating lever and handle are accessible from the exterior of the case.

4,300,443
BROILING APPARATUS
Joseph A. Morcos, Integrated Systems Engineering, 1518 Walnut St., Ste. 200, Philadelphia, Pa. 19102, and George A. Morcos, Philadelphia, Pa., assignors to Joseph A. Morcos, Philadelphia, Pa.
Filed May 29, 1980, Ser. No. 154,315
Int. Cl.^{3} A47J *37/04*
U.S. Cl. 99—332 **9 Claims**

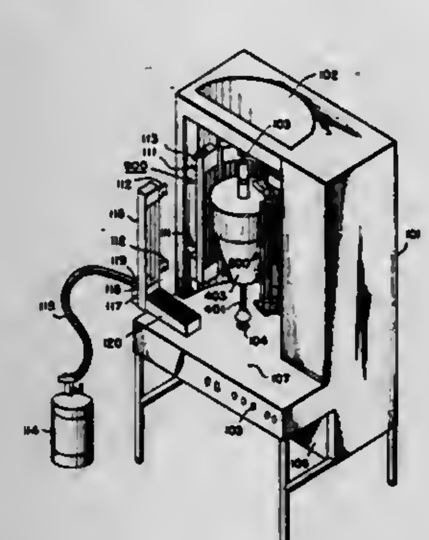

1. Broiling apparatus for meat comprising:
rotatable spit means for holding a drum of meat and rotating the meat about an axis;
means for rotating the spit means;
heating means for applying radiant heat to the meat held on the spit means; and
paring means for removing an outer layer from said drum of meat, comprising blade means having a cutting edge extending substantially parallel to the spit axis of rotation, and means for advancing said blade means toward the spit axis as the spit means rotates.

4,300,444
COOKER SUPPORT SYSTEM
Edward T. Muse, Tolosa, Tex., assignor to Smoker Products, Inc., Mabank, Tex.
Filed Feb. 13, 1979, Ser. No. 11,938
Int. Cl.^{3} A47J *37/04*
U.S. Cl. 99—448 **4 Claims**

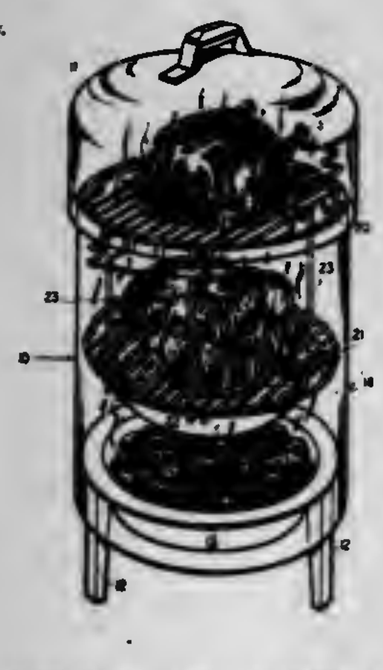

1. In a cooking device where a tubular housing has a heat source supported at the bottom and a pan and a grill to be supported thereabove, the improvement comprising in combination:
at least three hanger structures adapted to removeably rest in circumferentially spaced slots on a top rim portion of said housing and extend along the inner walls thereof with a portion contacting the outer face of the wall of said housing adjacent to one of said slots for limiting the inward movement of said hanger and a downwardly directed member for longitudinally contacting the inner wall of said housing below said one of said slots and terminating in a hook formed of a radial inwardly directed portion, a downwardly directed portion, a horizontal outwardly directed portion with said inwardly directed portion also forming an upward facing shoulder, said hook extending through apertures in the pan to engage and support the pan beneath the grill, said grill supported on said shoulder and providing positive locking of said hook against disengagement from said pan by forcing the downwardly directed portions of said hooks outward toward the housing wall, thereby preventing withdrawal of said hooks through said apertures when said downwardly directed members are in contact with said inner wall of said housing.

4,300,445
APPARATUS FOR SEPARATING FINES FROM WHEY
Gretz L. Hazen, Fort Atkinson, Wis., assignor to DEC International, Inc., Madison, Wis.
Filed May 17, 1979, Ser. No. 40,073
Int. Cl.^{3} A01J *25/00, 25/11*
U.S. Cl. 99—458 **4 Claims**

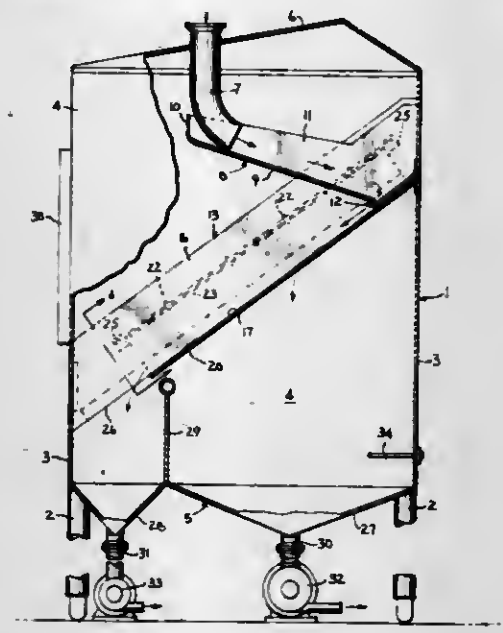

1. An apparatus for separating curd fines from whey, comprising a delivery member to receive whey-containing curd fines, an inclined separating trough located at the downstream end of the delivery member to received curds and whey from said delivery member, said separating trough including a frame having a pair of side walls and having an opening disposed between the side walls, a flexible removable screen disposed across said opening, the side edge of the screen extending laterally beyond said side walls, mounting means for removably mounting the side edges of the screen to said frame and located at a level above the bottom edge of said side walls, said side edges of the screen extending over the respective bottom edges of the side walls and extending upwardly to said mounting means, said mounting means including a rod secured to at least one side edge of the screen, adjusting means for adjusting the lateral tension on said screen, said adjusting means comprising a bracket disposed on said frame outwardly adjacent a side wall and having a series of laterally spaced connecting elements to receive the rod, positioning the rod within the respective connecting elements serving to adjust the lateral tension on the screen, whey collection means located beneath the screen to collect whey passing through the screen as the whey and cured fines flow downwardly along the screen, and second collection means located at the low end of the screen to collect the remaining portion of the whey and the curd fines.

4,300,446
APPARATUS FOR SALTING CHEESE
Gretz L. Hazen, Fort Atkinson, Wis., assignor to DEC International, Inc., Madison, Wis.
Filed Mar. 23, 1979, Ser. No. 23,079
Int. Cl.^{3} A01J *25/02, 25/10*
U.S. Cl. 99—461 **5 Claims**

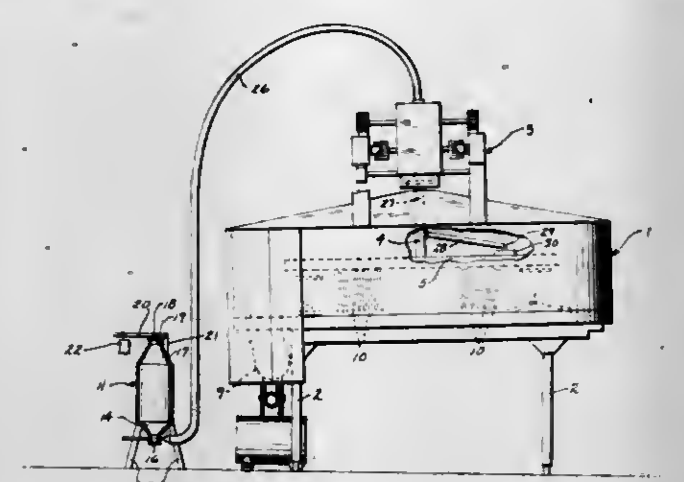

1. A cheese making apparatus, comprising a vat to contain cheese curds, an agitating unit mounted for reciprocating motion above the vat and including a vertical drive shaft and a rotating arm connected to the lower end of the drive shaft, agitating implements connected to said arm and disposed to agitate the curds in the vat as the arm is rotated, a salt tank disposed outside of the vat and containing a bed of salt, an uninterrupted pressurized delivery conduit having one end connected to the bottom portion of the salt tank and spaced above the bottom of the salt bed and the opposite end connected to said arm, said delivery conduit having a portion disposed coaxially of said shaft, and a pressure conduit connected to a source of gas under pressure and communicating with the bottom portion of said salt tank and spaced above the bottom of the salt bed for supplying a high velocity stream of gas into contact with the salt in said tank, said pressure conduit being spaced from said delivery conduit and being in general axial alignment therewith, said pressure conduit having a smaller diameter than said delivery conduit, said high velocity stream of gas creating a decrease in pressure in said bottom portion of the tank to draw salt into the high velocity stream for delivery of said gas and salt under positive pressure through the entire length of said delivery conduit to said vat.

4,300,447
NUT BLANCHER
Maurice W. Hoover, Raleigh, N.C., assignor to North Carolina State University at Raleigh, Raleigh, N.C.
Filed Mar. 18, 1980, Ser. No. 131,464
Int. Cl.^{3} A23N *5/01*
U.S. Cl. 99—516 **12 Claims**

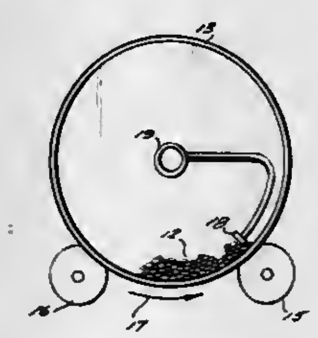

1. A device for blanching nuts comprising: (a) a hollow cylinder capable of holding nuts therein and mounted for rotation about a substantially horizontal axis; (b) means for rotating said cylinder about said longitudinal axis so that nuts contained therein partially rotate therewith; and (c) air jet means disposed within said cylinder, for directing at least one jet of air within said cylinder substantially contra to the direction of rotation thereof so that the jet of air impacts the rotating nuts substantially head-on to effect removal of the skins thereof.

4,300,448
APPARATUS FOR EXTRACTING PULP FROM CITRUS FRUITS
Masayuki Hayashi, Komaki; Yasushi Ifuku; Hirofumi Uchiyama, both of Wakayama; Yosimi Kaga, Aichi, and Akifumi Nakamori, Kure, all of Japan, assignors to Mitsubishi Jukogyo Kabushiki Kaisha, Tokyo and Prefectural Economic Federation of Agricultural Co-operatives, Wakayama, both of, Japan
Continuation of Ser. No. 27,930, Apr. 6, 1979, abandoned. This application Jun. 18, 1980, Ser. No. 160,721
Claims priority, application Japan, Apr. 10, 1978, 53-42005
Int. Cl.^{3} A23N *4/24*
U.S. Cl. 99—516 **4 Claims**

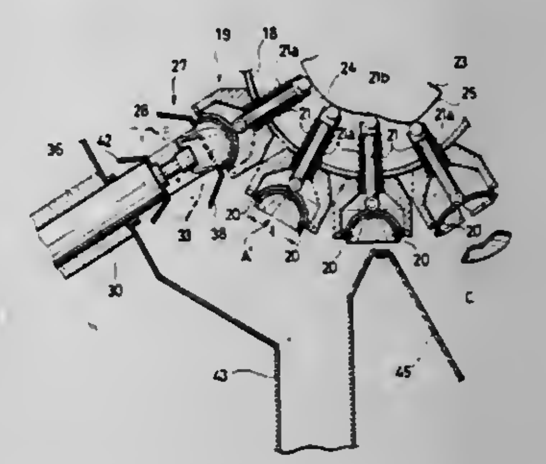

1. An apparatus for extracting pulp from citrus fruits, comprising means including a plurality of clamps mounted on the periphery of a rotary member for holding halves of the citrus fruit cut across their respective cores and bringing them into an extraction position with their cut surfaces exposed, and extraction means at said extraction position for rotating a fluid jet against said cut surfaces to extract pulp from said halves, said extraction means including a rotatable shaft substantially coaxial with said halves held in said extraction position and two nozzles rotated by said shaft and each having an elongate opening extending radially across the exposed surface of said halves held in said extraction position, said two nozzles being offset in the radial direction of the halves in said extraction position whereby one of said nozzles will direct a fluid jet toward the outer portions of said halves while the othet nozzle will direct a fluid jet toward the inner portions of said halves during rotation of said shaft.

4,300,449
CITRUS FRUIT JUICE EXTRACTOR HAVING A MULTIPLE CHAMBER JUICE MANIFOLD
Guillermo T. Segredo, Lakeland, Fla., assignor to FMC Corporation, Chicago, Ill.
Filed Aug. 15, 1980, Ser. No. 178,250
Int. Cl.^{3} B30B *9/02*
U.S. Cl. 100—98 R **6 Claims**

1. Fruit processing apparatus for applying pressure to a fruit to extract the juice-bearing material therefrom, for separating juice from the juice-bearing material, and for collecting the juice, said apparatus comprising: opposed fruit-engaging cups arranged to move in interdigitating relationship to squeeze a fruit therebetween, means in one of the cups for cutting an opening in the peel of the fruit through which juice-bearing material within the fruit may be ejected during the squeezing of the fruit, a perforated strainer tube communicating with said opening, a plunger which is slidable in said tube toward said

one cup to apply pressure to the juice-bearing material of the fruit that is ejected into the strainer tube for expressing juice within said juice-bearing material through the perforations in the strainer tube, and means for receiving the juice expressed through the strainer tube including one chamber that is arranged to receive juice expressed through one longitudinal

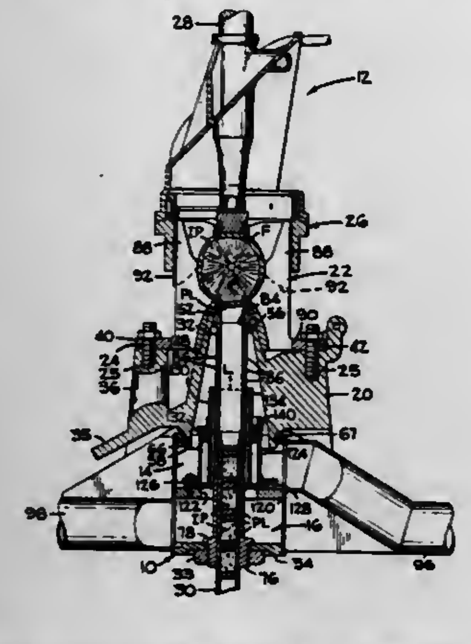

portion of strainer tube and another separate chamber arranged to receive juice expressed through a different portion of the strainer tube, means for forming a fluid-tight seal with the strainer tube at the juncture between said chambers, and separate conduits respectively connected to the separate chambers for providing separate egress of the juices collected in said chambers.

4,300,450
PRINTING PRESS LIQUID CIRCULATING SYSTEM INCLUDING AN ANTI-FOAMING DEVICE
Charles R. Gasparrini, Rye, N.Y., assignor to Baldwin-Gegenheimer Corporation, Stamford, Conn.
Filed May 18, 1979, Ser. No. 40,438
Int. Cl.³ B41F *31/02;* **B41L** *27/04*
U.S. Cl. 101—364 **8 Claims**

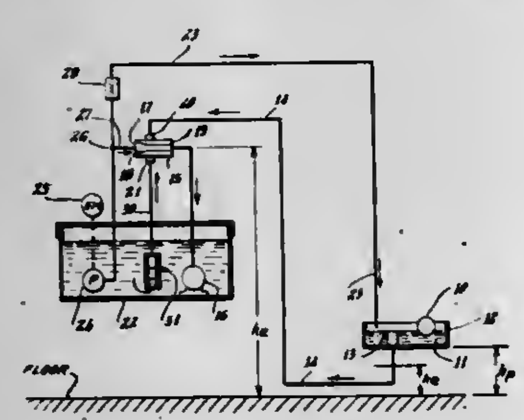

1. In a printing press liquid circulation system of the type wherein liquid is circulated via a return conduit from a fountain pan through a filter to a reservoir, the fountain pan including a standpipe for draining liquid and for maintaining a substantially constant liquid level in the fountain pan, the system including aspirating means connected between the fountain pan and the filter, said aspirating means having an inlet, an outlet and a suction port, said return conduit being connected to said suction port, pump means for supplying motive liquid to the inlet of the aspirating means, said aspirating means inducing a suction pressure in the return conduit between the aspirating means and the fountain pan to draw liquid from the return conduit and to mix the liquid from the fountain pan with the motive liquid, the pump means forcing the mixture through said filter into said reservoir, the improvement comprising:
conduit means connected between said aspirating means and said reservoir, said aspirating means inducing a suction pressure in said conduit means to draw liquid from said reservoir to said aspirating means to maintain a liquid level in said return conduit and to reduce the suction pressure in the return conduit to a value sufficient to suction only liquid through said return conduit.

4,300,451
METHOD AND APPARATUS FOR MEASURING PNEUMATIC DIFFERENTIAL DRAG FORCES
Bradley T. Sallee, Austin, Tex., assignor to Tracor, Inc., Austin, Tex.
Filed Jun. 12, 1978, Ser. No. 914,450
Int. Cl.³ F42C *5/00*
U.S. Cl. 102—223 **13 Claims**

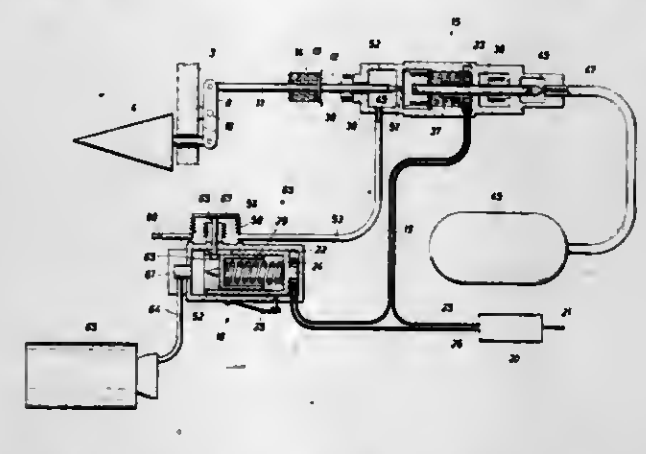

13. A method for detecting differential drag forces and initiating a signal when exposed to a sustained air pressure force of a predetermined magnitude, said method comprising:
placing in the air stream a body which will respond by movement to an air pressure force of a predetermined magnitude;
releasing a uniform pressure gas in response to the movement of the body into a chamber that has a restricted outlet;
sensing the pressure level within the chamber as the gas is allowed to escape through the restricted outlet at a predetermined rate; and
initiating a signal when the pressure level within the chamber exceeds a predetermined level.

4,300,452
DEVICE FOR TRANSMITTING SIGNALS BY MAGNETIC INDUCTION TO PROJECTILE FUSE
Roger Beuchat, Gland, and Remy Damond, Nyon, both of Switzerland, assignors to Mefina S.A., Fribourg, Switzerland
Filed Oct. 19, 1979, Ser. No. 86,315
Claims priority, application Switzerland, Oct. 30, 1978, 11164/78
Int. Cl.³ F42C *17/00*
U.S. Cl. 102—270 **5 Claims**

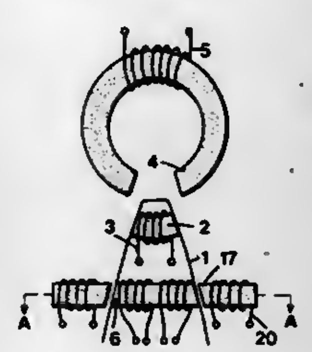

1. A device for transmitting an energy signal by magnetic induction and information carrier signals relative to the method of functioning and/or to the calculated firing delay to a projectile fuse, said device comprising an outer emitting part and a receptive part inside the fuse, at least two independent magnetic circuits, one of said magnetic circuits being adapted to transfer an energy signal for a power supply, the other magnetic circuit transferring at least one information carrier signal.

4,300,453
SHAPED CHARGE WARHEAD
Hans-Ulrich Bigler, Opfikon, Switzerland, assignor to Werkzeugmaschinenfabrik Oerlikon-Bührle AG, Zurich, Switzerland
Filed Dec. 14, 1979, Ser. No. 103,695
Claims priority, application Switzerland, Dec. 20, 1978, 12916/78
Int. Cl.³ F42B *1/00*
U.S. Cl. 102—307 **1 Claim**

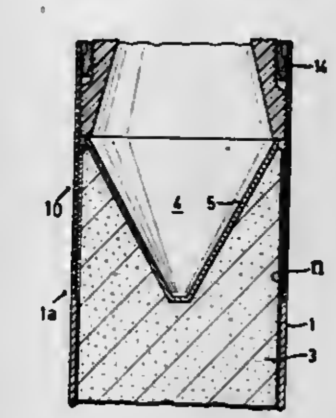

1. A shaped warhead comprising:
a sleeve;
a hollow charge arranged within said sleeve;
said hollow charge containing a substantially conical hollow cavity having a base and an apex; and
said sleeve being provided with internal threading extending from the base to the apex of said conical hollow cavity, so as to impart thereto a thinner and therefore weaker wall structure extending from said base to said apex of the conical hollow cavity.

4,300,454
SELF-STEERING DAMPING RAILWAY TRUCK
Herbert Scheffel, Pretoria, South Africa, assignor to South African Inventions Development Corporation, Pretoria, South Africa
Continuation-in-part of Ser. No. 757,278, Jan. 6, 1977, abandoned. This application Nov. 9, 1978, Ser. No. 959,382
Claims priority, application South Africa, Feb. 9, 1976, 76/0736
Int. Cl.³ B61F *3/08, 5/30, 5/38, 5/50*
U.S. Cl. 105—168 **8 Claims**

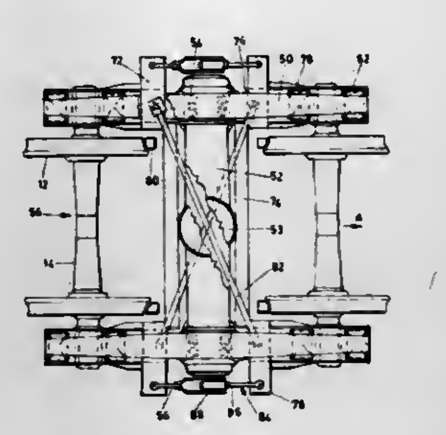

1. A railway truck having a longitudinal axis in its direction of travel and including:
(a) a load bearing structure;
(b) two wheelsets each comprising a pair of wheels fast on an axle, the wheels having treads that are profiled and have a high effective conicity to generate steering forces on curved track by the conicity of the tread independently of the wheel flange;
(c) axle bearing means on each wheelset;
(d) axle box adaptor means secured to each axle bearing means;
(e) resilient means suspending the load-bearing structure to the wheelsets through the axle box adaptor means and the axle bearing means to provide elastic constraints to yawing and lateral movements of each wheelset relatively to the load-bearing structure, the elastic constraints on each wheelset being lower than the steering forces generated by the high conicity tread on curved track whereby each wheelset is self-steering;
(f) damping means on each side of the logitudinal axis of the truck, each damping means being pivotally connected between the axle box adaptor means of the wheelsets and acting longitudinally resistively to oppose changes in spacing between ends of the wheelsets on the same side of the longitudinal axis of the truck; and
(g) means interconnecting the wheelsets to couple any yawing moment of each wheelset in opposite sense to the other wheelset on straight and curved track, said interconnecting means comprises two linkages which cross each other and which are connected to diagonally opposed axle bearing adapter means;
(h) the interconnecting means and the damping means acting to generate hunting stabilizing creep forces.

4,300,455
LEG STRUCTURE FOR TABLE, CHAIR OR THE LIKE
Ernesto Ornati, 59 Matthes Rd., Briarcliff Manor, N.Y. 10510
Filed May 14, 1979, Ser. No. 38,832
Int. Cl.³ A47B *47/04*
U.S. Cl. 108—156 **12 Claims**

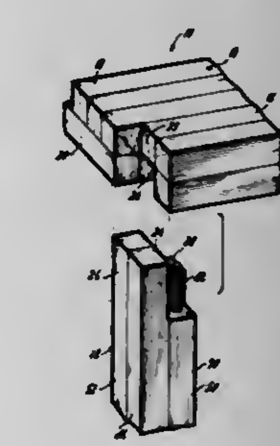

1. A leg structure for an article of furniture such as a table, chair or the like comprising: a leg having a top engaging portion and a bottom extending portion, said top engaging portion having a first portion extending at least the full height of said leg, a second portion extending less than said first portion and a third portion extending less than said second portion and a unitary furniture assembly constructed and arranged to engage said top engaging portion of said leg and having a first leg portion receiving cavity and second leg portion receiving cavity wherein said first leg portion receiving cavity is defined by substantially vertical surfaces in three different adjacently perpendicular vertical planes engaging substantially all of the corresponding substantially vertical surface of said top engaging portion of said first portion of said leg in corresponding three relatively perpendicular vertical planes whereby horizontal movement of said leg in three perpendicular directions is prevented by said substantially vertical surfaces of said first leg portion receiving cavity engaging substantially all of said corresponding substantially vertical surface of said top engaging portion of said first portion of said leg.

4,300,456
AUGER-FED SAWDUST BURNER WITH REVOLVING HOPPER
Gailyn Messersmith, Rte. #1, Box 38-B, Gourley, Mich. 49812
Filed Jul. 2, 1980, Ser. No. 165,406
Int. Cl.^{3} F23K *3/00*
U.S. Cl. 110—102 **9 Claims**

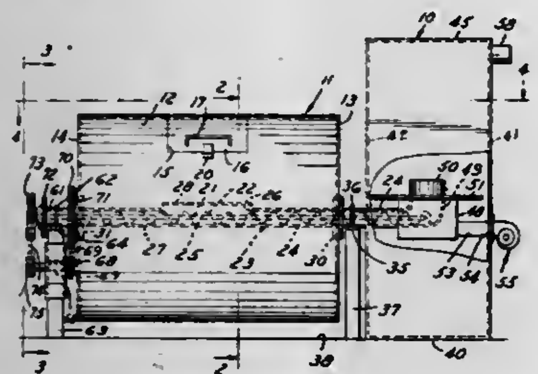

1. An apparatus for burning particulate fuel comprising:
(a) a furnace means for burning particulate fuel;
(b) a particulate fuel hopper;
(c) means for rotatably mounting said particulate fuel hopper;
(d) auger means for conveying particulate fuel from the hopper into said furnace means;
(e) power means for rotating said particulate fuel hopper and said auger means; and,
(f) said means for rotatably mounting said particulate fuel hopper including:
(1) a horizontally disposed, elongated conveyor tube for conveying particulate fuel into said furnace means;
(2) means for fixedly supporting said conveyor tube on a supporting surface; and,
(3) bearing means for rotatably mounting said particulate fuel hopper on the conveyor tube.

4,300,457
ADJUSTABLE SUBMERGED SCRAPER CONVEYOR SEAL TROUGH
Richard F. Moore, Tolland, Conn., assignor to Combustion Engineering, Inc., Windsor, Conn.
Filed Apr. 14, 1980, Ser. No. 140,059
Int. Cl.^{3} F23J *1/02*
U.S. Cl. 110—171 **3 Claims**

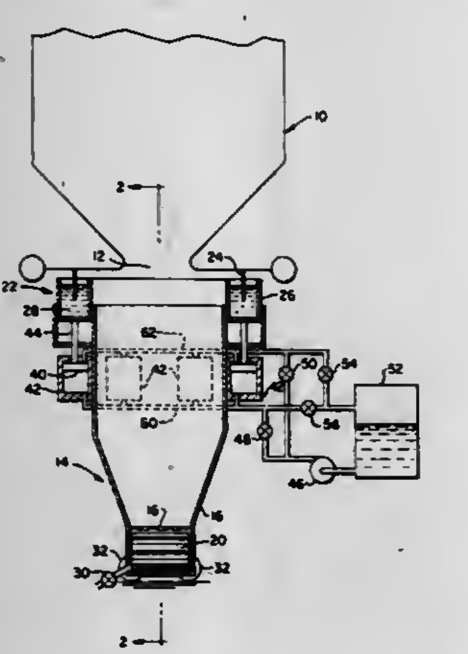

1. An ash-disposal system for ashes discharged from a coal-fired or other ash-bearing fuel-fired combustion chamber, including opening means in the furnace bottom, a tank open at its upper end and containing water positioned beneath the opening means, into which the ash from the combustion chamber falls, means for removing the ash from the tank, a water seal between the furnace bottom and the tank for sealing the furnace interior from exposure to the atmosphere, the water seal including plate means secured to and extending down from the furnace bottom, which plate means completely surround the opening means, a water filled trough secured to the upper end of the tank which completely surrounds the opened upper end of the tank, a trough having first and second positions, the first position being such that the plate means extend down into the water within the trough, and the second position being such that the trough is located beneath the plate means, and piston-cylinder actuated means for moving the trough between the first and second position.

4,300,458
APPARATUS FOR SUPPORTING A PERFORATED PLATE AIR DISTRIBUTOR FOR A FLUIDIZED BED
Joseph R. Comparato; Ernest L. Hartman, both of Bloomfield; Edward A. Zielinski, Harwinton, and David T. Myrick, Bloomfield, all of Conn., assignors to Combustion Engineering, Inc., Windsor, Conn.
Filed Mar. 3, 1980, Ser. No. 126,750
Int. Cl.^{3} F23D *1/00*
U.S. Cl. 110—263 **1 Claim**

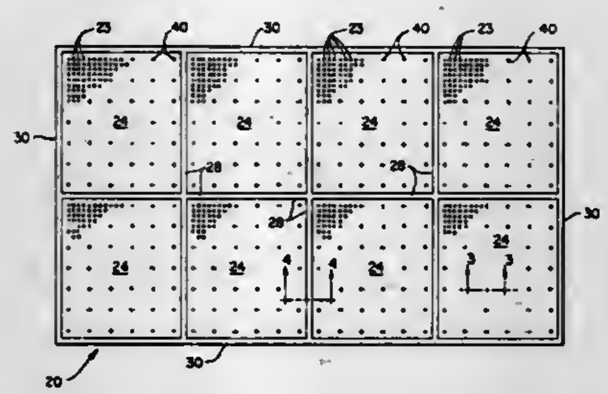

1. A fluidized bed system, including a furnace having side walls and containing grate means, said grate means being made up of a plurality of grate plates, means for introducing carbonaceous fuel particles onto the grate means, duct means for introducing high velocity air beneath the grate means for fluidizing and supporting combustion of the carbonaceous fuel, support means for the grate means, said support means including fixed support bars which extend beneath each grate plate across the width of the furnace and are attached to and supported by the side walls of the furnace, and means connecting each grate plate to the support bars in such a manner that the grate plates are free to expand and contract relative to the fixed support bars, and wherein each grate plate is further supported around its entire periphery by clamp members which permit each grate plate to move horizontally with respect to the clamp members supporting its periphery.

4,300,459
CHAR BINDER FOR FLUIDIZED BEDS
Richard W. Borio, Somers, and Joseph I. Accortt, Simsbury, both of Conn., assignors to Combustion Engineering, Inc., Windsor, Conn.
Filed Aug. 4, 1980, Ser. No. 174,764
Int. Cl.^{3} F23D *1/00*
U.S. Cl. 110—263 **1 Claim**

1. A fluidized bed type reactor having a housing enclosing a combustion chamber for the combustion of crushed fuel that includes a quantity of particulate fines, a collection chamber adapted to receive unburned particulate char exhausted from the combustion chamber, means supplying a quantity of crushed coal to the collection chamber, means for mixing together the particulate char and crushed coal, compacting means intermediate the collection chamber and the combustion

chamber adapted to compress the crushed coal and particulate char into an agglomerate mass, means for delivering the agglomerate mass of fuel and char to the fluid bed in the combus-

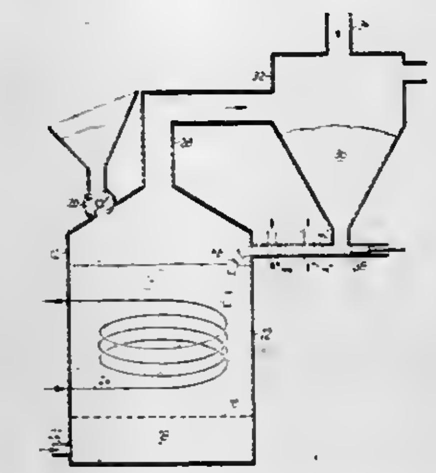

tion chamber, and means for cooling the agglomerated mass of crushed coal and char intermediate the heating means and the combustion chamber whereby the agglomerated mass is solidified before being introduced into the combustion chamber.

4,300,460
METHOD FOR GENERATING HEAT FROM WASTE FUEL
Frank H. Lamb; Malcolm D. Lefcort, both of Vancouver, and Petr Rada, North Vancouver, all of Canada, assignors to Enterprises International Inc., Olympia, Wash.
Division of Ser. No. 885,377, Mar. 10, 1978, Pat. No. 4,177,740. This application May 18, 1979, Ser. No. 40,227
Int. Cl.^{3} F23G *5/12*
U.S. Cl. 110—346 **15 Claims**

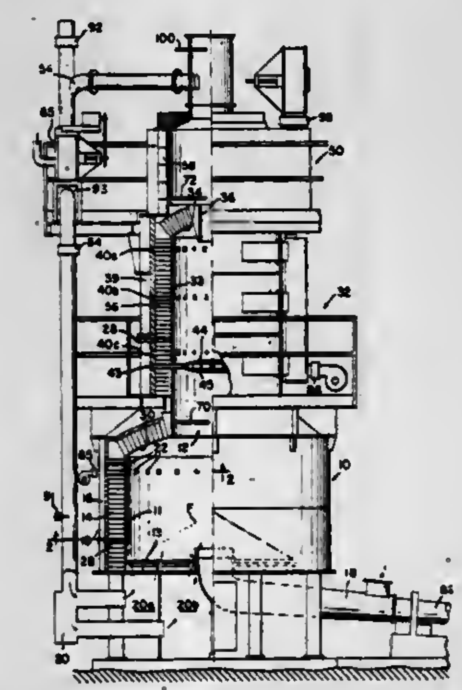

4. A method of generating heat from particulate-laden combustible gas containing mineral matter created from gasifying waste wood, coke or other combustible material, comprising:
directing the particulate-laden gas into a first combustion chamber,
adding first combustion air to said gas in said first combustion chamber in an amount less than stoichiometric to maintain the temperature of the stream of gases leaving the first combustion chamber below the temperature required to fuse the particulate in the gas and separating the particulate out of the stream of gases leaving the first combustion chamber at the exit of the first combustion chamber,
adding secondary combustion air in an amount greater than stoichiometric to said gases leaving the primary combustion chamber in a second combustion chamber to complete the oxidation of the gases and increase the temperature of the gases above the melting point of the mineral matter but in the absence of particulate wherein the particulate does not form slag in the second or primary combustion chambers.

4,300,461
GRASS SEED PLANTER HAVING FLUID INJECTION SOIL OPENER
Ronald F. Hodge, 2667 Gurley Pike, Gurley, Ala. 35748, and George D. Fears, 2571 Hurricane Rd., New Market, Ala. 35761
Filed Feb. 1, 1980, Ser. No. 117,454
Int. Cl.^{3} A01C *5/00, 7/20*
U.S. Cl. 111—6 **10 Claims**

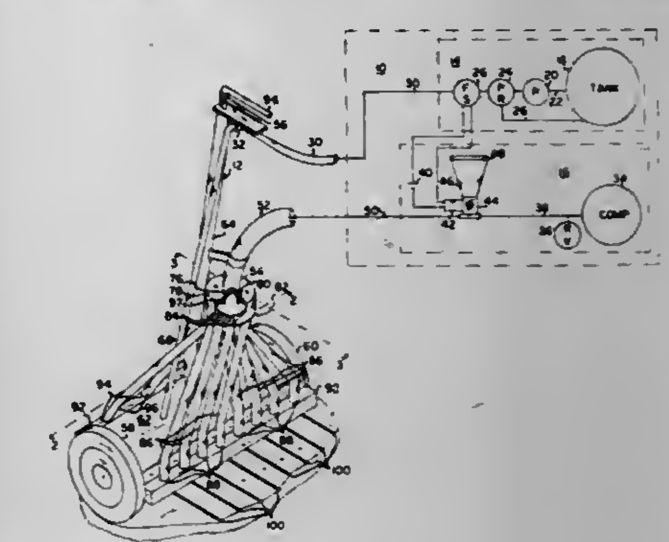

1. A planter comprising:
a frame adapted to be moved by hand over the ground along a selected line of direction;
a source A of pressurized liquid positioned remote from said frame and a flexible conduit coupled to said source A and extending to said frame;
a source B of gas pressurized seed material to be planted, said source B being located remote from said frame, and a second flexible conduit coupled to said source B and extending to said frame;
a plurality of fluid outlets supported by said frame lying generally along a line across said line of direction and coupled to said source A through said flexible conduit, and each being oriented to direct a fine pressurized stream of liquid at a point on the ground, whereby there is cut a plurality of parallel grooves in the ground in said line of direction as said frame is moved along said line of direction;
a like plurality of seed material outlets coupled to said source B through said second flexible conduit, and each supported on said frame along a line which intersects a said fluid outlet wherein said last-named line is along said line of direction, and wherein each said seed material outlet is positioned to direct seed material into one of said grooves as said frame is moved along a said line of direction at a point spaced from the point of impact of a said stream;
valve means coupled in circuit between said source A and, simultaneously, all of said fluid outlets for selectively turning on and off flow simultaneously to said outlets; and
seed control means connected in circuit between said source B and said seed material outlets for initiating and terminating the supply of seed to said seed material outlets;
whereby, by operation of said valve means and said control means, and movement of said frame over ground along said line of direction, a plurality of parallel narrow grooves are simultaneously cut in the ground, and seed is deposited in each groove, and whereby seed is deposited behind and thus spaced from a said stream of liquid, this

spacing preventing direct impact by a said stream on deposited seed, reducing the number of seed washing out of a groove, and thereby achieving a higher effective planting rate.

4,300,462

APPARATUS FOR PLANTING SEEDS

Dale E. Wilkins, Pendleton, Oreg., and William J. Conley, Salinas, Calif., assignors to The United States of America as represented by the Secretary of Agriculture, Washington, D.C.

Continuation-in-part of Ser. No. 43,974, May 30, 1979, abandoned. This application Jan. 4, 1980, Ser. No. 156,434

Int. Cl.³ A01C *5/00*

U.S. Cl. 111—34 **7 Claims**

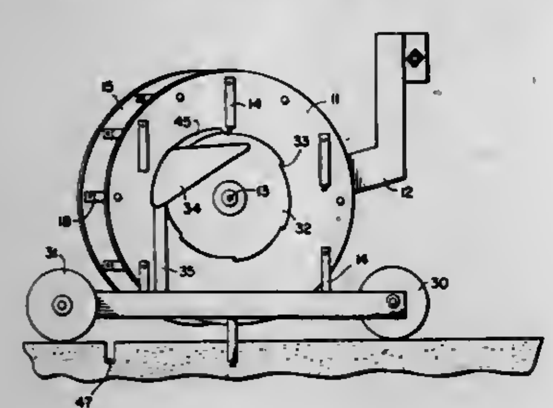

1. An apparatus for planting magnetized seeds, comprising in combination

(a) a frame,

(b) a punch disk rotatably mounted on the frame and containing a plurality of magnitized punches mounted thereon,

(c) means for driving said punch disk,

(d) eccentric means for maintaining the punches on said punch disk perpendicular to the soil surface at all times, said means being eccentrically disposed to said punch disk,

(e) a seed hopper mounted on said frame, and

(f) a seed disk rotatably mounted on said frame and communicating with said seed hopper to singulate seeds to said punches, said seed disk containing a plurality of notches corresponding to the number of punches of said punch disk,

means for driving and carrying said seed disk and said punch disk in timed relation such that said punches and said notches are rotated whereby a respective seed-receiving punch and the seed-carrying notch are in a plane substantially perpendicular to the soil surface and passing through the axis of rotation of said seed disk when said seed-receiving punch is receiving a seed from the seed-carrying notch,

the distance between said punches and said seed disk being such as to allow ready transfer of the seed from said notches to the punches.

4,300,463

NEEDLE THREADING DEVICE FOR SEWING MACHINES

Shuzo Morimoto, Hino, Japan, assignor to Janome Sewing Machine Co., Ltd., Tokyo, Japan

Filed Jul. 22, 1980, Ser. No. 171,419

Claims priority, application Japan, Jul. 27, 1979, 54-95041

Int. Cl.³ D05B *87/02*

U.S. Cl. 112—225 **7 Claims**

1. A needle threading device for a sewing machine having a needle bar with a needle eye attached at the lower end thereof, said needle threading device moved between an upper inoperative position and a lower operative position in which said threading device is manually operated to pass a thread into the needle eye, comprising mounting means arranged adjacent to the needle bar; slide means mounted on the mounting means for sliding movement in a vertical direction, said sliding means having an operating part which is manually accessible: guide means turnably mounted on the slide means carrying an instrument manually operated to insert a thread into the needle eye from one side to the other side thereof; means cooperating with the needle in a predetermined position to determine a lateral position of the guide means relative to the needle eye during

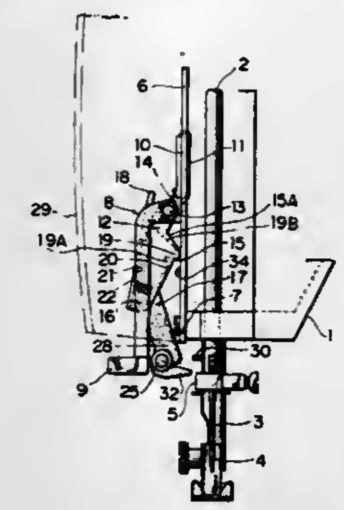

the downward sliding movement of the guide means from the inoperative position to the operative position; means cooperating with a part of the needle bar to determine a vertical position of the guide means relative to the needle eye during the sliding movement of the guide means from the inoperative position to the operative position; and hook means mounted on the guide means to draw out, on the other side of the needle eye, the thread inserted into the needle eye by the thread inserting instrument during the sliding movement of the guide means from the operative position to the inoperative position.

4,300,464

THREAD TENSION CONTROL FOR SEWING MACHINES

Pietro Bonalumi, Cerausco Sul Naviglio, Italy, assignor to Rockwell-Rimoldi, S.p.A., Milan, Italy

Filed Nov. 5, 1979, Ser. No. 91,686

Claims priority, application Italy, Dec. 13, 1978, 30771 A/78

Int. Cl.³ D05B *27/10, 47/04, 63/00*

U.S. Cl. 112—254 **2 Claims**

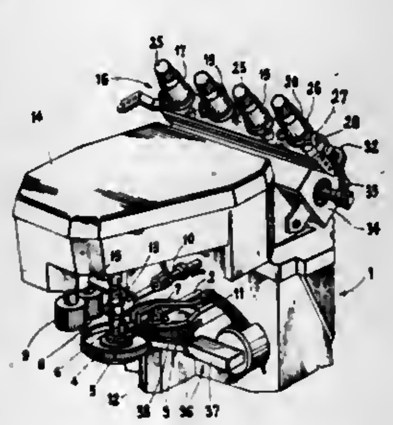

1. A thread tension control for the threads of a looper and the needle in sewing machines for forming stitches of the double chain type on a succession of workpieces, and of the type having a main transport means associated with the sewing area defined by the looper and needle and an auxiliary transport device spaced from and in alignment with the main transport means, said thread tension control comprising:

(a) a separate tensioning device for the looper thread and the needle thread mounted on the machine including:

(i) at least one pair of tensioning elements for each thread defining opposed spring biased discs between which the thread passes with one of said pair being of the pre-set type and the other of the openable type for effecting release of the thread tension imposed thereby;

(b) means operatively associated with the main transport means for sensing the presence and absence of a workpiece therein including:

(i) a switch member (37) with an actuating blade member (38);

(c) control means operatively connected to said switch member and blade member for effecting actuation thereof upon reception of a workpiece by the main transport means to effect application of tension on the threads by both tensioning elements of each tensioning device and the release of tension applied by one of each pair of tensioning elements during advance of the workpiece solely by the auxiliary transport device, said control means including:

(i) a slidable plate member (32) operatively connected to each of the openable type tensioning elements; and

(ii) an electromagnet connected to said switch member (37) having an actuating arm (35) operatively connected to said slidable plate member (32) for moving the latter between positions for opeing and closing the tensioning elements in accordance with the dictates of said switch member (37).

4,300,465

THREAD-TENSION REGULATING DEVICE FOR MULTI-THREAD SEWING MACHINE

Shigeo Tsuboi, 26-1, 3-chome, Ohoka-cho, Minami-ku, Yokohama-shi, Japan

Filed Sep. 19, 1978, Ser. No. 943,716

Claims priority, application Japan, Sep. 22, 1977, 52/127884[U]

Int. Cl.³ D05B *47/04*

U.S. Cl. 112—255 **11 Claims**

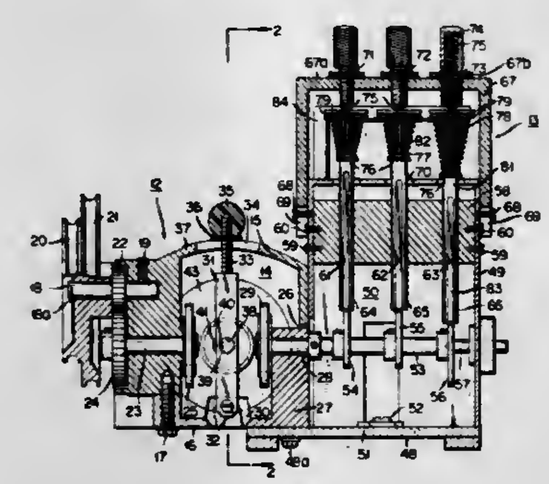

1. A thread-tension regulating device of a multi-thread sewing machine comprising:

a plurality of operating rods reciprocable in a longitudinal direction thereof;

pairs of tension discs mounted on the respective operating rods;

biasing means for elastically urging each pair of the tension discs toward each other and imparting tension varying in accordance with the reciprocating movement of the corresponding operating rod to a thread passing between the paired tension discs and thereafter supplied to a multi-thread sewing machine;

a cam shaft extending perpendicularly to said plurality of operating rods;

a plurality of cams fixedly mounted on said cam shaft, each of said cams having a peripheral surface engaging one end of each of said plurality of operating rods respectively; and

infinite speed variator means comprising a first friction wheel for rotating said cam shaft, a second friction wheel disposed separately but concentrically with said first friction wheel and having the same diameter as that of the first friction wheel, a wheel shaft disposed perpendicular to the common axis of the first and second friction wheels, third and fourth friction wheels mounted on the respective ends of said wheel shaft and having inner surfaces in contact with the peripheral surfaces of the first and second friction wheels; and moving means for moving said third and fourth friction wheels substantially along the common axis of the first and second friction wheels.

4,300,466

HYDRODYNAMIC DEVICES

Trevor I. Slivey, Sherborne, England, assignor to Plessey Handel und Investments AG, Zug, Switzerland

Filed Aug. 21, 1979, Ser. No. 68,409

Claims priority, application United Kingdom, Oct. 14, 1978, 40863/78

Int. Cl.³ B63G *8/42*

U.S. Cl. 114—244 **8 Claims**

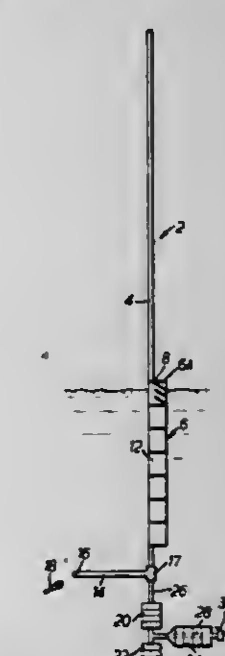

1. A hydrodynamic device comprising first and second parts which are connected together such that the first part is movable from a storage position in which it lies adjacent to the second part to an operable position in which it stands up and extends from one end portion of the second part, the second part comprising an elongate fairing member having a plurality of transversely extending hydrofoil elements, single towing means for enabling a single connection to be made between said hydrodynamic device and a towing vessel, and counterbalance weight means for providing a counterbalance weight, said counterbalance weight means and said elongate fairing member acting together to maintain vertical stability for the hydrodynamic device, whereby the hydrodynamic device can be towed in water by the single towing means with the first part visible above the water and the second part submerged;

wherein said counterbalance weight means comprises at least one weight positioned on an end portion of the second part, said end portion being remote from the first part;

said device further comprising a rectangular damper plate connected to said at least one weight.

4,300,467
ANCHOR
Rob van den Haak, Allegro 114, Krimpen and IJssel, Netherlands
Filed Mar. 16, 1979, Ser. No. 21,081
Int. Cl.³ B36B *21/44*
U.S. Cl. 114—303 **1 Claim**

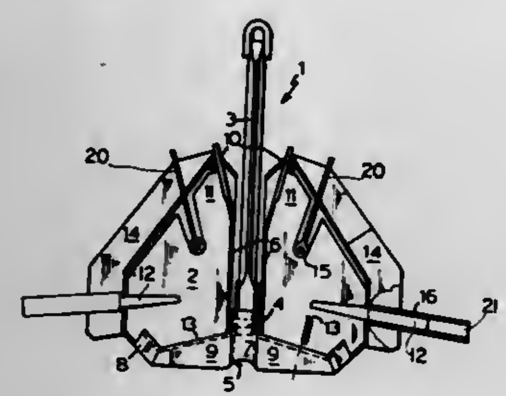

1. An anchor, which comprises:
fluke members including front and rear stabilizer members and side edge portion;
a shank pivotably mounted between said fluke members;
a stabilizer stock member mounted on and extending from each of said fluke members;
flap member means juxtaposed to said side edge portion of each of said fluke members to extend effective fluke area of said anchor, each of said flap member means including a mounting arm and a tube including a chamber for positioning said stabilizing stock member therein; and
means for affixing said mounting arm to respective fluke members.

4,300,468
POSITION INTERLOCK SYSTEM FOR SUBMARINE MASTS AND CLOSURE
Paul S. Catano, and Malvyn C. McDonald, both of San Diego, Calif., assignors to The United States of America as represented by the Secretary of the Navy, Washington, D.C.
Filed Mar. 24, 1980, Ser. No. 133,238
Int. Cl.³ B63G *8/38*
U.S. Cl. 114—340 **6 Claims**

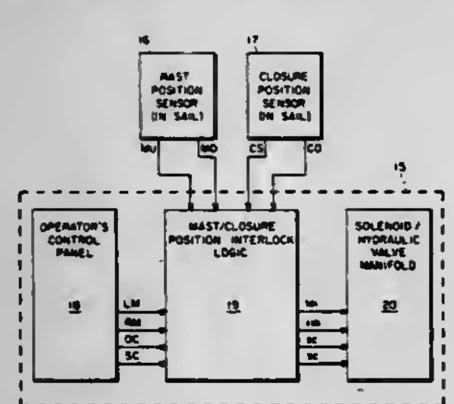

1. In a system for electronically protecting a submarine mast and its protective closure from collision an improvement therefor is provided comprising:
first means for selectively producing signals indicative of a mast-up and a mast-down condition;
second means for selectively producing signals indicative of an closure-open and a closure-closed position;
means for providing control signals to selectively raise and lower the mast and open and secure the closure;
means coupled to the first and second selectively producing signal means and the providing means for only initiating discrete actuation signals to lower and to raise the mast and to open and to secure the closure only when discrete combinations of the mast-up and mast-down condition signals and the closure-open and closure-closed signals are received thereby to ensure said protecting of the submarine mast and its protective closure.

4,300,469
DROP MARKER
Maurice K. Hawe, Box 583, Waitsburg, Wash. 99361
Filed Jan. 15, 1979, Ser. No. 3,209
Int. Cl.³ B64D *1/02*
U.S. Cl. 116—209 **10 Claims**

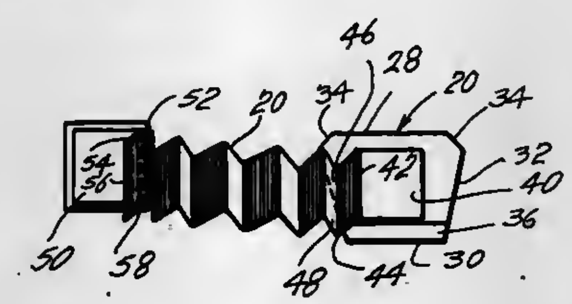

1. A drop marker for use in marking ground areas from an airplane, said drop marker comprising:
a. a first base member;
b. a second base member;
c. a folded streamer strip of soft flexible material having a large surface area and a first end and a second end;
d. said first end of said folded streamer strip affixed to said first base member and said second end of said folded streamer strip affixed to said second base member;
e. said first base member and said second base member being spaced apart and separated by said folded streamer strip;
f. whereby when the marker is dropped from an airplane said base members separate thereby causing said folded streamer strip to unfold and stream between said base members; and,
g. the configurations of said first base member and said second base member being different.

4,300,470
LUMINANT POINTER FOR METERS
Noriyuki Furukawa, Shimada, Japan, assignor to Yazaki Sogyo Kabushiki Kaisha, Tokyo, Japan
Filed Oct. 30, 1979, Ser. No. 89,516
Claims priority, application Japan, Nov. 10, 1978, 53-154020[U]
Int. Cl.³ G01D *13/22*
U.S. Cl. 116—332 **2 Claims**

1. A luminant pointer for use in a meter, comprising a base portion of transparent material receiving light from a light source, a finger portion of transparent material having upper and lower faces and being coupled integrally with said base portion which directs light toward and into said finger portion, said finger portion having a trapezoidal sectional shape with the transverse width of its upper face being wider than that of its lower face, a layer of color paint provided on said lower face of said finger portion; and
the angle of the side faces of said finger portion of trapezoidal section being determined to satisfy the relation $\theta_1=\theta_2$ or $\theta_1 \doteq \theta_2$ between a first angle θ_1 and a second angle θ_2, wherein said first angle θ_1 is that defined between a first line extending from one side edge of the upper face of said finger portion of trapezoidal section in a relation orthogonal with respect to the upper face and a second line extending from one side edge of the lower face on the same side as said side edge of the upper face and passing through said side edge of the upper face, and said second angle θ_2 is that defined between said second line and a third line extending from said side edge of the upper face

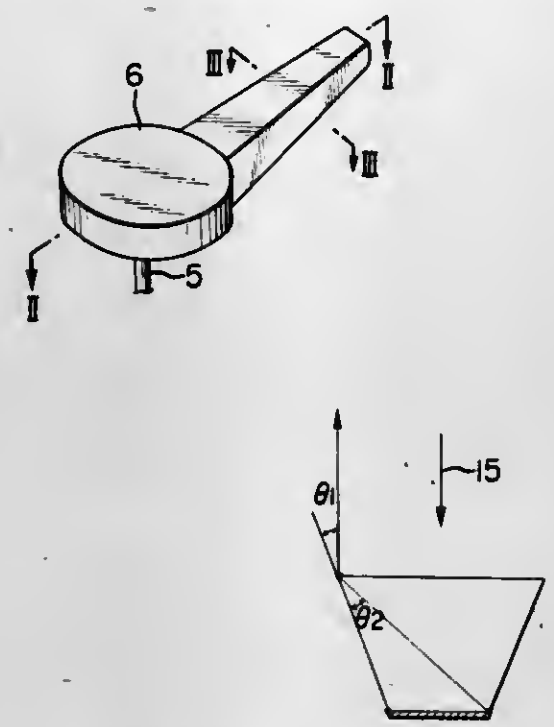

to the diagonal side edge of the lower face of said finger portion.

4,300,471
WALLPAPERING APPARATUS
J. C. Guy Desjardins, 107 rue Binet, Hull, Canada
Continuation-in-part of Ser. No. 605,454, Aug. 18, 1975, abandoned. This application Jan. 7, 1977, Ser. No. 757,511
Claims priority, application Canada, Oct. 1, 1974, 210540
Int. Cl.³ B05C *1/08, 3/15*
U.S. Cl. 118—235 **2 Claims**

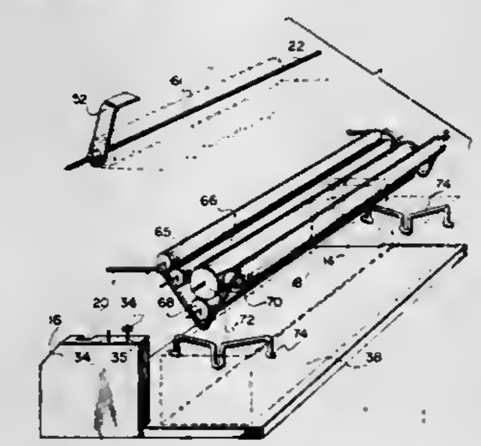

1. An apparatus for applying wall paper, said apparatus comprising, a base, spaced apart upright flanges on the base for holding a roll of wall paper with guide means attached thereto, frame members on the flanges extending into a trough positioned in front of said flanges, a first roller journaled on the membera so as to extend along an upper edge of an adjacent side wall of the trough and a second roller journaled on a portion of said members extending into a lower portion of the trough, whereby a roll of wall paper supported for rotation on said flanges is fed over said first roller, under said second roller which is in the trough of water so that when a length of paper is withdrawn it is moistened and the leading portion can be applied to an uppermost portion of a wall, positioned, cut to length, and the procedure repeated as the apparatus is moved along the wall.

4,300,472
SOLVENT TYPE CEMENTER
Robert W. Morin, Salem, Mass., assignor to Boston Machine Works Company, Lynn, Mass.
Filed Apr. 24, 1980, Ser. No. 143,286
Int. Cl.³ B05C *1/02*
U.S. Cl. 118—245 **6 Claims**

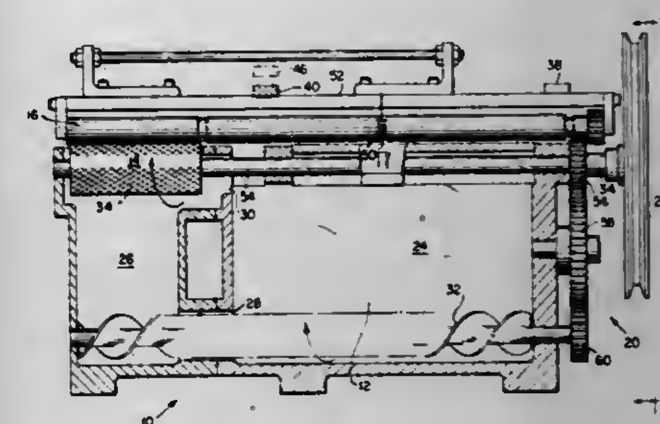

1. A solvent type cementer for flat work pieces comprising, in combination:
(a) first means for containing solvent cement;
(b) second means partially disposed within said first means for applying a uniform layer of said solvent cement to one side of said flat work pieces;
(c) third means for flexing said flat work pieces against said second means and including a pair of rolls rotatable in opposite directions, an arm operatively mounting said pair of rolls, said arm pivotable between a position adjacent said second means to a position spaced from said second means about an axis that is parallel spaced from the axis of said second means; and
(d) drive means of unitary construction driven by a single pulley for driving said third means faster than driving said second means, said drive means including a drive shaft, said pulley secured to one end of said drive shaft and said second means secured to the other end of said drive shaft, a second shaft mounted on said pivotable arm about an axis in parallel spaced relation to said axis of said second means, and fourth means mounted on said second shaft;
(e) said fourth means including a pair of transfer gears operatively coupled to one another, each of said pair of rolls of said third means provided with respective drive gears, said pair of transfer gears designed for transferring torque from said drive shaft to one of said pair of rolls through one of said drive gears;
(f) said axis of said pivotable arm, said axis of said second means and said axis of said second shaft being disposed in the same plane when said pivotable arm is in said position adjacent said second means.

4,300,473
DEVICE FOR MOISTENING THE ADHESIVE COATING ON POSTAGE STAMPS AND ENVELOPES
Donald B. Poynter, Cincinnati, Ohio, assignor to Poynter Products, Inc., Cincinnati, Ohio
Filed Jul. 17, 1980, Ser. No. 169,860
Int. Cl.³ B05C *1/02*
U.S. Cl. 118—263 **7 Claims**

1. An apparatus for moistening adhesive coatings on postage material and the like, comprising:
(a) an enclosure member;
(b) an open top liquid container disposed within said enclosure member;
(c) a spring biased linkage member pivotally mounted within the enclosure member and biased to a predetermined position;
(d) a moistening member pivotally mounted to the linkage member, said moistening member being movable from a first position in which it is disposed within the open top

liquid container to a second position in which it is extended outwardly from the enclosure member;

(e) a plunger reciprocally movable within the enclosure member, said plunger engaging the linkage member for applying a force thereto non-coincident with the linkage member's pivotal axis to overcome its spring bias; and

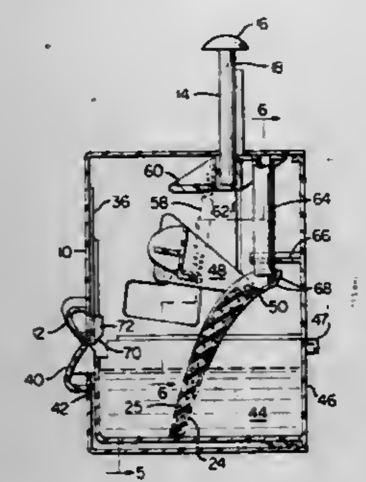

(f) a reciprocally movable closure member, said closure member being movable from a first position to a second position in response to a force transmitted by said moistening member for selectively closing and exposing of an opening in said enclosure member, said moistening member extending through said opening when said closure member is in its second position.

4,300,474
APPARATUS FOR APPLICATION OF METALLIC COATINGS TO METALLIC SUBSTRATES
Livsey, Colne, England, assignor to Rolls-Royce Limited, London, England
Division of Ser. No. 125,022, Feb. 25, 1980, Pat. No. 4,269,868. This application Dec. 30, 1980, Ser. No. 221,513
Claims priority, application United Kingdom, Mar. 30, 1979, 11294/79
Int. Cl.³ C23C *17/00*
U.S. Cl. 118—641 7 Claims

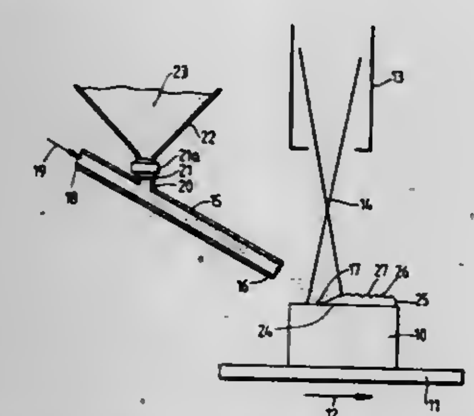

1. Apparatus suitable for applying a metallic coating to a metallic substrate comprising a laser arranged to direct a laser beam on to the substrate to be coated, said laser beam having an area of impingement on said substrate, means arranged to direct a gas stream on to the area of impingement of said laser beam on said substrate, means for metering particles of the metallic coating material into said gas stream such that said metered metallic particles of coating material are entrained therein and directed to said area of laser beam impingement on said substrate, and means to effect a relative movement between said laser and said substrate so that in operation, said area of laser beam impingement, and hence metallic coating impingement, traverses said substrate at such a rate that fusion takes place between said metallic substrate and said molten metallic coating material.

4,300,475
TONING SYSTEM
Joseph N. Bond, Commack, N.Y., assignor to Litton Systems, Inc., Melville, N.Y.
Filed Jun. 18, 1980, Ser. No. 160,775
Int. Cl.³ G03G *15/09*
U.S. Cl. 118—657 14 Claims

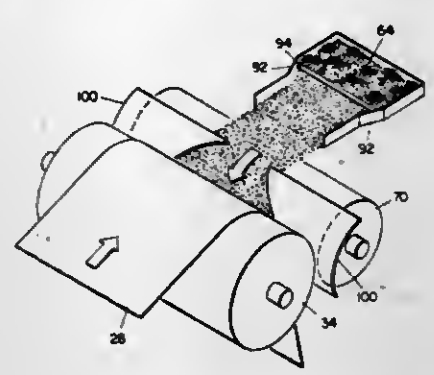

1. An improved toner system for use in an electrophotographic recorder for toning the charged areas upon a sheet, comprising:

container means for said toner having an opening therein,

toner brush means mounted within said container means for moving said toner and partially closing said opening,

roller means for transporting said sheet adjacent said toner brush means where said moving toner contacts said sheet and adheres to said charged areas thereon, and

toner guide means mounted within said opening for masking said sheet as said moving toner contacts said sheet and guiding said moving toner into a diverging flow as said toner contact continues.

4,300,476
APPARATUS FOR THE STIFFENING OF TEXTILE SHEETS BY COATING WITH PLASTIC
Richard Juraschek, and Karl-Heinz Nolte, both of Vlotho, Fed. Rep. of Germany, assignors to Herbert Kannegiesser GmbH & Co., Vlotho, Fed. Rep. of Germany
Filed May 27, 1980, Ser. No. 153,232
Claims priority, application Fed. Rep. of Germany, May 25, 1979, 2921102
Int. Cl.³ B05C *1/02*
U.S. Cl. 118—694 2 Claims

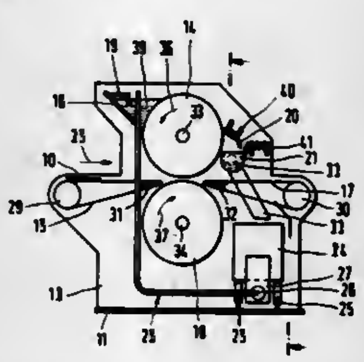

1. An apparatus for stiffening textile sheets of various shapes for the manufacture of outerwear fabrics, said apparatus including conveyor means for the textile sheets, a gravure printing cylinder disposed above said conveyor means, and plastic feed means for supplying plastic to said printing cylinder, comprising:

(a) a plurality of circumferential grooves (38) axially spaced along the length of the cylinder (14) defining surface elevations and plastic carrying depressions therein,

(b) a feed reservoir (18) for coating the surface of the cylinder with plastic (39), said reservoir being disposed on the textile sheet entry side of the cylinder relative to the direction of conveyance,

(c) a level switch (19) operatively associated with the feed reservoir for detecting the plastic fill level therein;

(d) a doctor blade (20) including a resilient edge mounted in wiping contact with said printing cylinder for cleaning the surface elevations and depressions thereof, said doctor blade being disposed on the textile sheet exit side of the cylinder,

(e) a transverse collecting trough (21) disposed below the doctor blade and above a discharge conveyor belt (17) for collecting plastic and contaminant material removed from the cylinder by the doctor blade,

(f) a discharge device comprising a conveyor screw (22) disposed in a lower region of said collecting trough,

(g) a discharge chute (23) disposed at one end of said screw and trough,

(h) a movably mounted supply reservoir (24) disposed below the collecting trough and discharge chute for receiving material discharged therefrom, and

(i) conveying means (26) including a feed pump (27) and a filter (28) for conveying plastic from the supply reservoir to the feed reservoir while simultaneously removing contaminants therefrom, said conveying means being controlled by the level switch of the feed reservoir.

4,300,477
AQUACULTURE REARING SYSTEM
Paul W. Chapman, Derry, N.H., assignor to Sanders Associates, Inc., Nashua, N.H.
Continuation of Ser. No. 99,364, Dec. 3, 1979, abandoned, which is a division of Ser. No. 918,886, Jun. 26, 1978, Pat. No. 4,198,924. This application Feb. 9, 1981, Ser. No. 232,922
Int. Cl.³ A01K *63/00*
U.S. Cl. 119—2 12 Claims

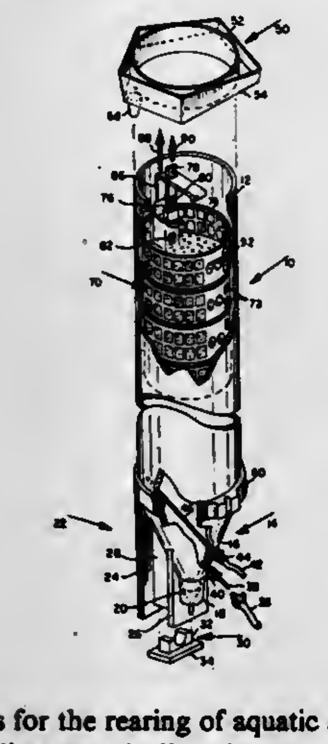

5. Apparatus for the rearing of aquatic animals comprising:

a tank including a vertically oriented vessel; and

a single vertically stacked arrangement of animal rearing compartments per vessel, each compartment being in the form of a basket of a diameter less than the inside diameter of said vessel, said stacked arrangement including a single strongback member and means for individually and randomly removably mounting said baskets to said strongback member such that any of said animal rearing compartments may be removed from said strongback member without removing any others of said animal rearing compartments, said baskets being removably mounted at one position at the edge thereof.

4,300,478
AQUARIUM STRUCTURE
Bennett L. Wise, 617 N. Main St., Marion, Ohio 43302
Filed Mar. 16, 1979, Ser. No. 21,433
Int. Cl.³ A01K *64/00*
U.S. Cl. 119—5 8 Claims

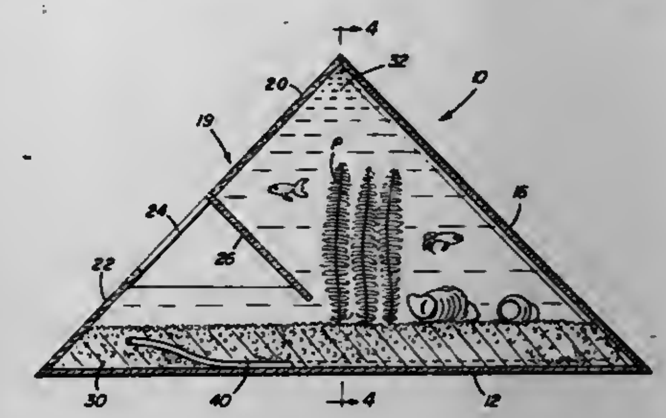

1. An aquarium structure capable of maintaining a liquid therein at a level above an access opening in the aquarium, comprising:

a bottom portion;

a top enclosure structure connected to said bottom portion for defining the aquarium interior;

a side opening formed in said top enclosure and disposed medially between said bottom portion and the top extreme of said enclosure structure, said side opening being formed in a horizontal plane;

said side opening is formed in said enclosure structure between an outer wall relative to the center of said aquarium and an inner wall relative to the center of said aquarium, said outer wall rising from below the bottom of said inner wall to a height above the bottom of said inner wall, said inner wall extending laterally across the entire top enclosure and acting to block the path of air or other gas from said side opening to the inner top extreme of the aquarium when the aquarium is filled with liquid, and

liquid disposed within and filling the interior of the aquarium including the top extreme of the enclosure structure above said side opening.

4,300,479
RACING PIGEON CAGE
David J. Demko, R.D.#3 Box 232, Reading, Pa. 19606
Filed May 19, 1980, Ser. No. 151,392
Int. Cl.³ A01K *31/06*; A63K *3/02*
U.S. Cl. 119—15.6 7 Claims

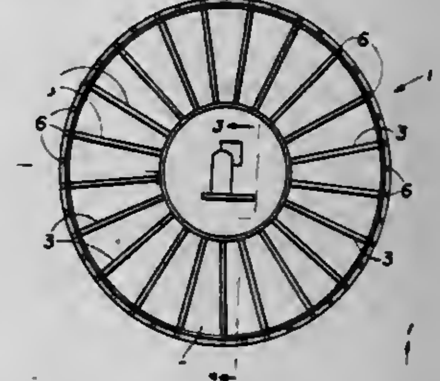

1. A training crate for racing pigeons and the like comprising a stationary round base platform having radially extending partitions supported thereon to provide individual stalls for said pigeons, a motor mounted on said base platform and a foraminous cylinder surrounding the outer periphery of said platform and being driven by said motor, said cylinder having an opening large enough to allow exiting of a pigeon when

driven past said stalls, in succession, to allow successive pigeons to exit in timed succession.

4,300,480
APPARATUS AND PROCESS FOR THE OPERATION OF AN ENVIRONMENTALLY SATISFACTORY COAL FIRED PLANT
Fritz Schoppe, Max-Rüttgers-Str. 24, 8026 Ebenhausen, Isartal, and Wilhelm Wenz, Ehlerstr. 19, 5142 Hückelhoven, both of Fed. Rep. of Germany
Filed Dec. 14, 1979, Ser. No. 103,461
Claims priority, application Fed. Rep. of Germany, Dec. 15, 1978, 2854170
Int. Cl.³ F22B *9/06;* **F23D** *11/44*
U.S. Cl. 122—121 **4 Claims**

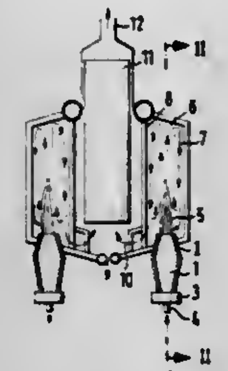

1. The process for operating a coal-fixed power plant in environmentally sound fashion by reduction of the emission of NO_x and SO_2, said power plant being provided with a boiler structure having at least one firing chamber, said at least one chamber having cooled walls and a burner muffle and an accelerating nozzle, and means for firing said chamber with a coal dust fuel whereby said fuel is heated rapidly before being mixed with combustion air and is rapidly cooled by said walls before being discharged, the steps comprising: preparing a coal dust fuel having a surface-active ash, injecting said fuel into the return flow of a flame in said burner muffle, said firing chamber having a load of $5\text{–}15\times10^6$ kcal/m³ hr, heating said coal dust at a rate of at least 1000° C./sec. to a temperature above the ignition point of the coal dust with combustion air at an intensity such that a firing-chamber load of $5\text{–}15\times10^6$ kcal/m³ hr with respect to said burner muffle and said accelerating nozzle is obtained, producing a flame jet in the accelerating nozzle at a velocity of at least 100 m/sec., cooling the flame jet by intermixture with cooled flame gases from the firing chamber in less than 0.1 sec. to less than 1000° C. gas temperature, and discharging the cooled flame gases with at least part of the ash in the form of dust from the firing chamber.

4,300,481
SHELL AND TUBE MOISTURE SEPARATOR REHEATER WITH OUTLET ORIFICING
Robert W. Fisk, Cape Elizabeth, Me., assignor to General Electric Company, Schenectady, N.Y.
Filed Dec. 12, 1979, Ser. No. 102,796
Int. Cl.³ F22G *3/00;* **F28B** *9/00;* **F28F** *9/02*
U.S. Cl. 122—406 B **12 Claims**

1. A shell and tube moisture separator reheater comprising:

(a) a shell having at least one wet shellside steam inlet opening in the lower side thereof operative to receive cool saturated shellside steam and at least one dry superheated shellside steam outlet opening in the upper side thereof operative to discharge hot superheated shellside steam;

(b) moisture separator means within said shell proxamate said inlet opening for removing entrained moisture from said saturated shell side steam;

(c) at least one reheater tube bundle having at least heat transfer tubes thereof located in said shell and including

(c1) at least one inlet header chamber operatively connected to receive hot tubeside steam hotter than said shellside steam;

(c2) at least one outlet header chamber operatively connected to receive and discharge liquid condensate and excess tubeside steam;

(d) a plurality of U-shaped heat-transfer tubes in said shell in heat transfer relationship with said shellside steam and operative to transfer heat to said shellside steam by condensation of a portion of the tubeside steam therein whereby liquid condensate is deposited therein, said heat transfer tubes being subjected to differing thermodynamic loading, the more heavily loaded thereof having deposited therein the greater amount of liquid condensate;

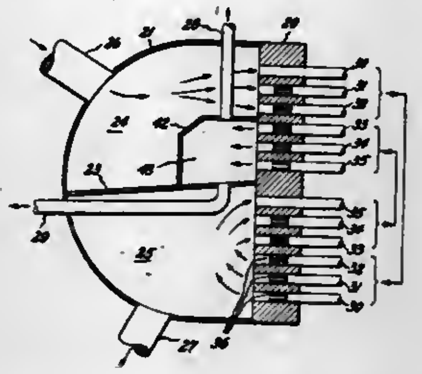

(d1) at least one portion of said heat-transfer tubes being in fluid flow relationship with said inlet header chamber and operative to receive therefrom hot tubeside steam;

(d2) at least a portion of said heat-transfer tubes being in fluid flow relationship with said outlet header chamber and operative to transfer thereto condensate and excess tubeside steam; and

(e) discrete restricted diameter orifices located within said heat-transfer tubes adjacent said outlet header chamber for controlling the flow of condensate and shellside steam from said tubes to said header and preferentially pass liquid condensate therefrom, said orifices providing different size outlet apertures in different heat transfer tubes in accord with the different thermodynamic loading thereof.

4,300,482
FUEL SYSTEM
Sherman L. Tinkham, 1406 E. Lotus Path, Clearwater, Fla. 33516
Filed Dec. 3, 1979, Ser. No. 99,340
Int. Cl.³ F02B *45/04;* **F02D** *19/04*
U.S. Cl. 123—23 **26 Claims**

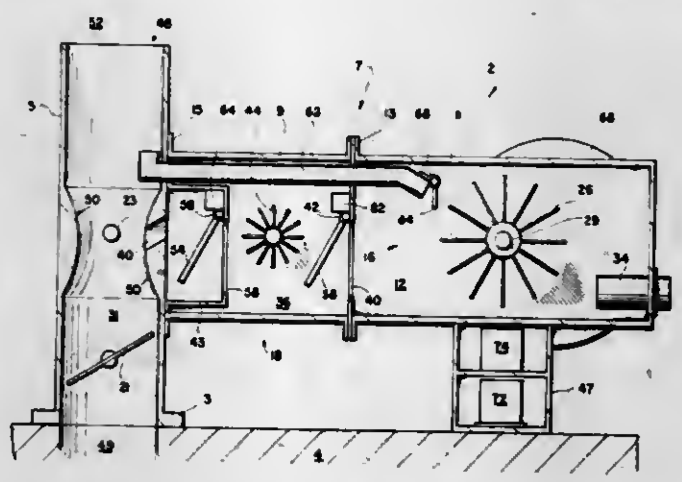

1. A solid fuel carburetor for an internal combustion engine, comprising:

a solid fuel supply means for advancing a cake of solid, combustible fuel into an operative position in a mixing chamber;

a rotary brush means proximate to said fuel supply means and contacting said fuel cake, for abrasively removing fuel particles therefrom in said mixing chamber;

an air supply means proximate to said brush means, for mixing air with said removed fuel particles forming a combustible mixture in said mixing chamber;

a delivery means connected between said mixing chamber and said internal combustion engine, for delivering said combustible mixture to said internal combustion engine;

said delivery means further comprising,

a swirl chamber connected to the output of said mixing chamber, for maintaining said fuel particles suspended in the air; an air inlet having a Venturi restriction therein, connecting the ambient air to said internal combustion engine; said swirl chamber having an outlet in the wall of said Venturi restriction, for introducing said combustible mixture into said engine;

a mixing chamber outlet valve mounted between said mixing chamber and said swirl chamber, for preventing said combustible mixture transferred from said mixing chamber into said swirl chamber from flowing back into said mixing chamber;

an electromechanical actuator connected to said mixing chamber outlet valve, for closing said outlet valve in response to an input signal;

a fuel particle density sensor mounted in said mixing chamber and connected to said input of said actuator, for sensing the ration of fuel particles to air in said mixture and outputting a sensing signal to said actuator;

said actuator closing said outlet valve in response to said sensor detecting that said fuel to air ration is less than a predetermined magnitude;

a swirl chamber outlet valve mounted between said swirl chamber and said Ventury restriction, for preventing said combustible mixture transferred from said swirl chamber to said Venturi restriction from flowing back into said swirl chamber.

4,300,483
ELECTRONICALLY CONTROLLED FLUID INJECTION SYSTEM FOR AN INTERNAL COMBUSTION ENGINE
Toronita P. Goodman, Summit Point, W. Va., assignor to The Goodman System Company, Inc., Armonk, N.Y.
Filed Feb. 4, 1980, Ser. No. 118,239
Int. Cl.³ F02B *47/00, 47/02, 47/08*
U.S. Cl. 123—25 J **15 Claims**

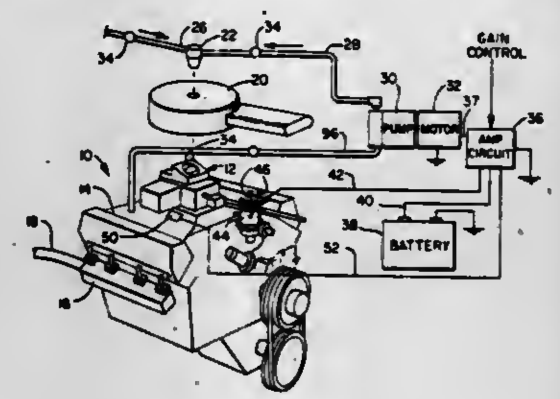

1. A system for injecting fluid into a cylinder of an internal combustion engine having an ignition system and an intake manifold, said fluid injecting system comprising first means for introducing air to a supply of said fluid for injecting said fluid into said cylinder at a rate proportional to the flow of said air, and second means in a responsive relation to said ignition system and to said intake manifold for responding to engine speed related signals from said ignition system and to engine load related signals from said intake manifold for introducing air to said first means at a flow that varies in response to engine speed and engine load.

4,300,484
ELECTRONICALLY CONTROLLED FLUID INJECTION SYSTEM FOR AN INTERNAL COMBUSTION ENGINE
Toronta P. Goodman, Summit Point, W. Va., assignor to The Goodman System Company, Inc., Armonk, N.Y.
Filed Feb. 4, 1980, Ser. No. 118,302
Int. Cl.³ F02B *47/00, 47/02, 47/08*
U.S. Cl. 123—25 J **20 Claims**

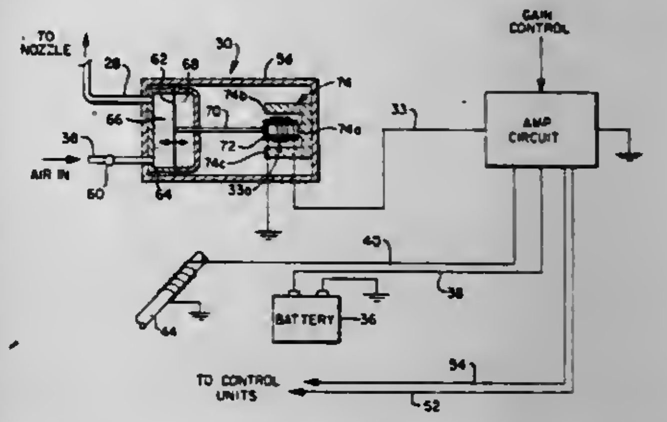

1. A system for injecting fluid into a cylinder of an internal combustion engine having an ignition system, said fluid injecting system comprising first means for introducing air to a supply of said fluid for injecting said fluid into said cylinder at a rate proportional to the flow of said air, and second means in a responsive relation to said ignition system for responding to engine speed and engine load related signals from said ignition system for introducing air to said first means at a flow that varies in response to engine speed and engine load.

4,300,485
ELECTRONICALLY CONTROLLED FLUID INJECTION SYSTEM FOR AN INTERNAL COMBUSTION ENGINE
Toronta P. Goodman, Summit Point, W. Va., assignor to The Goodman System Company, Inc., Armonk, N.Y.
Filed Mar. 3, 1980, Ser. No. 126,986
Int. Cl.³ F02D *47/00, 47/02, 47/08*
U.S. Cl. 123—25 J **19 Claims**

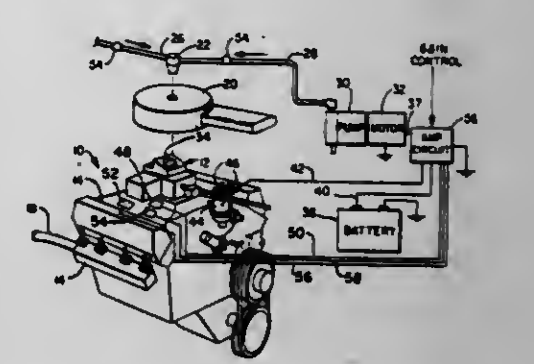

1. A system for injecting fluid into a cylinder of an internal combustion engine having an ignition system and an intake manifold, said fluid injecting system comprising first means for introducing air to a supply of said fluid for injecting said fluid into said cylinder at a rate proportional to the flow of said air, second means for supplying air to said first means, control means for controlling the operation of said second means, said control means being in a responsive relation to said ignition system and to said intake manifold for responding to engine speed related signals from said ignition system and to engine load related signals from said intake manifold for controlling the operation of said second means so that air is introduced to said first means at a flow that varies in response to engine speed and engine load.

4,300,486

INTERNAL COMBUSTION ENGINE SYSTEM
TECHNICAL FIELD

Frank E. Lowther, Buffalo, N.Y., assignor to Purification Sciences Inc., Geneva, N.Y.

Continuation-in-part of Ser. No. 972,786, Dec. 26, 1978, Pat. No. 4,230,075, and Ser. No. 970,320, Dec. 18, 1978, abandoned, and Ser. No. 955,896, Oct. 30, 1978, and Ser. No. 961,264, Nov. 16, 1978, Pat. No. 4,215,659, and Ser. No. 955,895, Oct. 30, 1978, and Ser. No. 951,383, Oct. 16, 1978, abandoned. This application Apr. 13, 1979, Ser. No. 29,884

Int. Cl.[3] F02B *33/00, 75/00*

U.S. Cl. 123—39 **15 Claims**

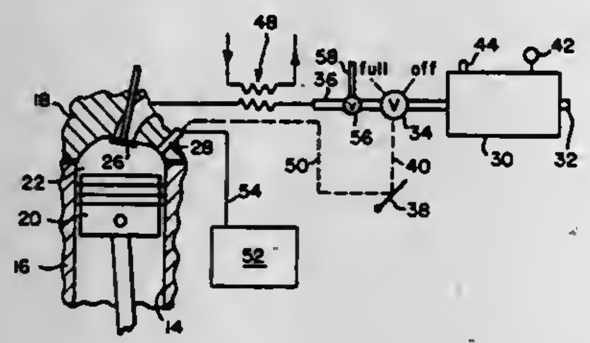

1. (A) An internal combustion engine including a least one piston-cylinder-combustion chamber system;
(B) Means for operating said system to provide strokes consisting of an exhaust stroke, an intake stroke and a power stroke, with no compression stroke;
(C) A tank for storing oxygen containing compressed gas and a conduit for feeding compressed gas from said tank to said at least one combustion chamber;
(D) Means for controlling the flow of compressed gas from said tank through said conduit and to said at least one combustion chamber;
(E) Means for feeding fuel into said at least one combustion chamber; and
(F) Means for igniting a compressed gas-fuel mixture in said at least one combustion chamber;
(G) Means for feeding ambient air into said at least one combustion chamber when said tank is empty; and
(H) Means for compressing said ambient air in said at least one combustion chamber.

4,300,487

ROTARY ENGINE

Joseph P. Trialzi, Los Angeles, Calif., assignor to Triulzi Rotary, Inc., Chino, Calif.

Filed Aug. 4, 1980, Ser. No. 175,025

Int. Cl.[3] F02B *57/06*

U.S. Cl. 123—44 C **3 Claims**

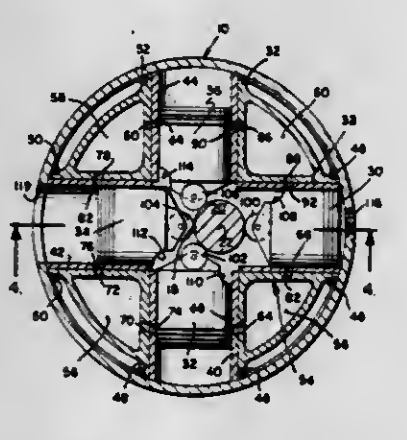

1. A rotary engine comprising:
a fixed housing defining an interior space having a central axis,
a fixed post attached to said housing and extending into said space, said post being offset from said central axis,
a rotor including a pair of opposed plates rotatable within said housing, said rotor including a plurality of independent pistons each having a bearing on the bottommost portion for bearing and rolling about said post whereby actuating the pistons causes the rotor to rotate,
each piston is disposed to reciprocate radially in a cylinder rotatable with said rotor and located between said opposed plates,
similar air chambers for holding air under pressure located between said plates and disposed between said cylinders and rotatable as said rotor rotates,
a rotary output shaft projecting through said housing and attached to said rotor, said output shaft being coaxial with said central axis,
a centrifugal blower having extending vanes directly attached to said output shaft and mounted directly on the outside of said housing, and
a rotating valve having a plurality of ports one for each chamber and attached to said rotor for providing a passageway from said blower to each of said chambers sequentially for charging each of said chambers with air under pressure.

4,300,488

RESONATOR CONDUIT SYSTEM FOR INTRODUCING INTAKE GASES IN INTERNAL COMBUSTION ENGINES

Gyula Cser, Budapest, Hungary, assignor to Autoipari Kutato Intezet, Budapest, Hungary

Filed Jul. 6, 1979, Ser. No. 55,486

Claims priority, application Hungary, Jul. 7, 1978, AU-406

Int. Cl.[3] F02B *27/00*

U.S. Cl. 123—52 M **11 Claims**

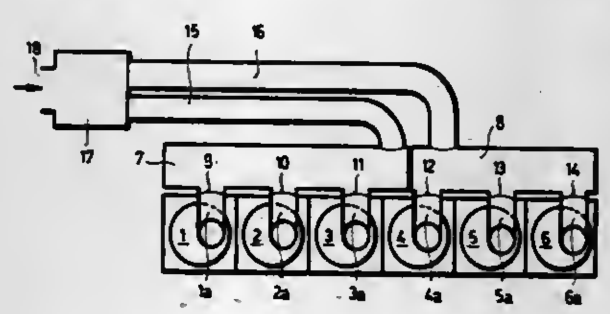

1. In a multi-space intake gas conduit system for introducing intake gases by resonance charging into a multi-cylinder internal combustion piston engine, including at least two separate resonator vessels each associated with a separate cylinder group formed of predetermined cylinders of the engine; each resonator vessel being coupled to intake openings of the cylinders forming the cylinder group associated with the respective resonator vessel; at least one resonance tube coupled to each resonator vessel; and at least one damper vessel interconnecting the resonance tubes; the resonator vessels and resonance tubes associated with separate cylinder groups forming separate acoustic oscillating system tuned to substantially the same natural frequencies for charging the cylinders; the improvement wherein the resonance tubes coupled to different resonator vessels form, according to their length, at least two significantly unlike dimensional groups; further wherein the nominal length of the shortest resonance tube is at least 0.6 times the nominal length of the longest resonance tube and the nominal diameter of a circle having an area identical to the cross-sectional area of said shortest resonance tube is smaller than, but at least 0.8 times, the nominal diameter of a circle having an area identical to the cross-sectional area of said longest resonance tube; and further wherein the nominal volume of the resonator vessel coupled to said shortest resonance tube is at the most 1.7 times the nominal volume of the resonator vessel coupled to said longest resonance tube, whereby the amplitude and the kinetic energy of oscillations of said separate acoustic oscillating systems are at least approximately equal and the oscillating masses of said separate acoustic oscillating systems are different for obtaining uniformity in the charging of each cylinder with intake air.

4,300,489

PIPE CLOSING DEVICE

Marc Perrin, Genlis, France, assignor to Cycles Peugeot, Valentigney, France

Continuation of Ser. No. 965,020, Nov. 30, 1978, abandoned. This application Aug. 15, 1980, Ser. No. 178,412

Claims priority, application France, Dec. 5, 1977, 77 36551

Int. Cl.[3] G05D *11/03*

U.S. Cl. 123—73 AD **6 Claims**

6. A safety closing device in combination with an engine having a lubricating oil circuit comprising an oil tank and an oil pump, and a fuel supply pipe, for interrupting the supply of fuel to the engine when there is no oil in said tank and circuit, the device comprising a vessel having an upper end and a lower end and a lateral wall, an upper/oil first inlet in constant communication with the oil tank and circuit and a first outlet in a lower part of the vessel for connection to an inlet of the pump, the vessel extending around the supply pipe, a float unit comprising a permanent magnet and a float rigid with the permanent magnet, the float unit being disposed in said vessel around the pipe to move in a substantially vertical direction between said upper end of the vessel and said lower end of the vessel, means defining a passage for liquid between the float unit and said lateral wall of the vessel, the float unit being lighter than the volume of the oil displaced thereby and consequently being capable of floating on the oil and having a level in the vessel which is constantly related to the level of the oil irrespective of the flow of the oil, a valve seat in the pipe and a check valve member cooperative with the valve seat for closing the pipe in a lower position of the valve member and opening the pipe in an upper position of the valve member the pipe having a second inlet adjacent said first inlet and a second outlet adjacent said first outlet, the valve member being biased against the seat under the force of gravity and being responsive to attraction of the magnet so that when no oil is in the vessel and the magnet and float are adjacent said lower end of the vessel, the valve member bears against the valve seat and as soon as oil is in the vessel the float and the magnet move away from said lower end of the vessel and the magnet shifts the valve member away from the seat and opens the pipe.

4,300,490

AIR-FUEL MIXTURE RATIO CORRECTING SYSTEM FOR CARBURETOR

Tadashi Hattori, Nishio; Shigetaka Takada, Oobu; Kenji Hayashi, Aichi, and Toshiharu Iwata, Okazaki, all of Japan, assignors to Nippon Soken, Inc., Nishio, Japan

Division of Ser. No. 758,338, Jan. 10, 1977, Pat. No. 4,153,021, which is a division of Ser. No. 475,917, Jun. 3, 1974, Pat. No. 4,036,186. This application Mar. 22, 1979, Ser. No. 22,999

Claims priority, application Japan, Jun. 4, 1973, 48/63243; Jun. 4, 1973, 48/63244; Jun. 4, 1973, 48/63245; Jul. 26, 1973, 48/84346; Sep. 27, 1973, 48/109060

Int. Cl.[3] F02M *9/06*

U.S. Cl. 123—439 **5 Claims**

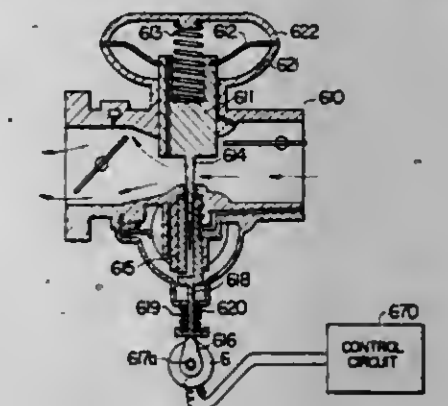

1. An air-fuel ratio controlling system for an internal combustion engine comprising:
a carburetor connected to an intake manifold of an internal combustion engine and including an intake passage for supplying an air-fuel mixture to said engine and a throttle valve disposed in said intake passage for controlling the amount of the air-fuel mixture;
said carburetor also including;
a suction piston slidably supported by said intake passage upstream of said throttle valve for forming a variable venturi therein, said suction piston being moved back and forth in accordance with the pressure difference between the pressure at the downstream location thereof and the pressure at the upstream location thereof;
a fuel nozzle provided at said intake passage and opening at one end into said variable venturi for supplying fuel to said intake passage, the other end thereof being communicated with a float chamber storing fuel therein; and
a needle valve coupled at one end to said suction piston, the other end thereof projecting into said fuel nozzle for controlling the amount of fuel to be supplied to said intake passage in response to an axial movement of said needle valve varied by at least said suction piston;
driving means associated with said needle valve for varying the axial movement of the same irrespectively of the axial movement of said needle valve varied by said suction piston;
air-fuel ratio sensing means disposed in an exhaust manifold of said engine for detecting the air-fuel ratio of the air-fuel mixture supplied to said engine; and
a control circuit connected to said air-fuel ratio sensing means for controlling said driving means in accordance with the output from said air-fuel ratio sensing means to compensate the air-fuel ratio, whereby the fuel supplied from said fuel nozzle is increased when the air-fuel ratio detected by said air-fuel ratio sensing means is higher than a predetermined value, and being decreased when the air-fuel ratio is lower than said predetermined value to thereby control the air-fuel ratio of the air-fuel mixture to be supplied to said engine at a desired value.

4,300,491
CONTROL APPARATUS FOR GLOW PLUGS PROVIDED FOR A DIESEL ENGINE
Toshizo Hara, Kawajima, and Tsutomu Yamada, Nagatoro, both of Japan, assignors to Diesel Kiki Co., Ltd., Tokyo, Japan
Filed Jun. 29, 1979, Ser. No. 53,422
Claims priority, application Japan, Jun. 30, 1978, 53-89347[U]
Int. Cl.³ F02P *19/02*
U.S. Cl. 123—179 BG **1 Claim**

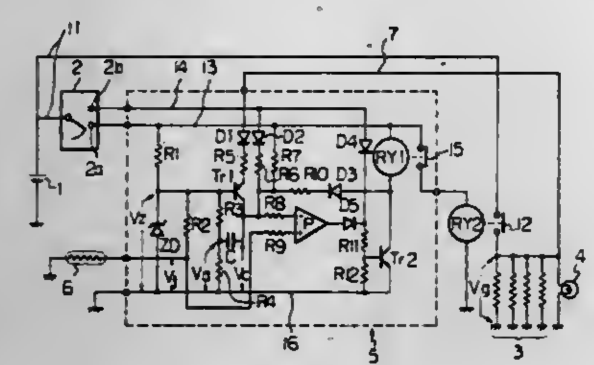

1. Control apparatus for glow plugs of a preheating device provided for preheating a diesel engine comprising:
a power supply;
a first relay having an ON-OFF relay switch for applying a voltage from said power supply to the glow plugs;
a key switch connected to said power supply and having an OFF position, an ON position in which a preheating contact is closed for preheating, and a START position in which the preheating contact and a starter contact are both closed for starting the diesel engine;
a second relay connected to said preheating contact and having an ON-OFF relay switch connected to the first relay;
a thermistor for generating a temperature voltage which corresponds to a temperature of diesel engine cooling water;
a first resistor and a zener diode connected to said preheating contact;
a first transistor receiving a zener voltage of the zener diode to a base terminal thereof;
a second and a third resistor for dividing said zener voltage;
a condenser connected between a collector terminal of the first transistor and a connection point of the second and the third resistors;
a comparator having two input terminals, a first one of said terminals being connected to said thermistor and a second one of said terminals being connected to said condenser, said preheating contact being connected to said second one of said terminals through a fourth resistor, said starter contact being connected to said second one of said terminals through a first diode and fifth resistor, respectively;
a second diode connected between said starter contact and an output of said comparator;
a sixth and a seventh resistor connected to the output of said comparator;
a second transistor for exciting said second relay by inputting a dividing voltage of the sixth and the seventh resistors;
a third diode and an eighth resistor connected between an emitter terminal of the first transistor and the glow plugs;
a fourth diode and a ninth resistor connected between the collector terminal of the first transistor and a collector terminal of the second transistor; and
a pilot lamp connected in parallel to the glow plugs;
wherein the first relay is ON-OFF controlled by the ON-OFF relay switch of the second relay, and the ON-OFF relay switch of the first relay ON-OFF controls to apply voltage of the power supply to the glow plugs, thereby to control a preheating time of the glow plugs depending on the temperature of said diesel engine cooling water and a terminal voltage of the glow plugs when said key switch is operated at the ON position or the START position.

4,300,492
THERMAL BARRIER VALVE
Hansuell Bart, Whitehall, Mich., assignor to Eaton Corporation, Cleveland, Ohio
Continuation of Ser. No. 908,330, May 5, 1978, abandoned. This application Dec. 18, 1979, Ser. No. 104,928
Int. Cl.³ F01L *3/00*
U.S. Cl. 123—188 AA **10 Claims**

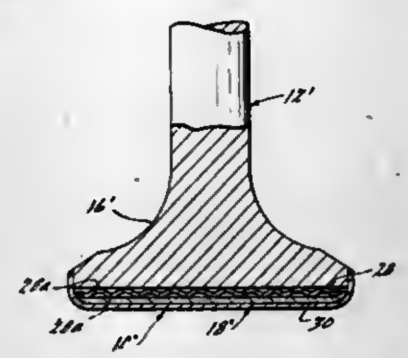

1. In a poppet valve of the type including a mushroom head having a face portion which is normally exposed to cyclically combusting gases in a combustion chamber of an expansible chamber engine, a thermal barrier comprising:
a cup-shaped metal cap including a shield portion spaced from said face portion and a continuous skirt portion circumscribing said face portion and welded to said bead, the surface of said face portion and the inner surfaces of said shield and skirt portions of said cap defining an evacuated chamber, said skirt portion operative to thermally expand radially by varying amounts over its length between said shield portion and said head in the presence of the heat of said combusting gases for minimizing stresses due to thermal expansion differences between said shield portion and said bead, and said shield portion having an outer surface subjected to cyclical pressures of said cyclically combusting gases; and
a heat insulating material disposed within said evacuated chamber for reducing radiation heat transfer through said evacuated chamber and for providing structural support over substantially the entire inner surface of said shield portion to prevent oil-canning of said shield portion due to said cyclical pressures.

4,300,493
ENGINE BALANCER FOR A FOUR CYLINDER IN-LINE INTERNAL COMBUSTION ENGINE
Jerome L. Berti, Chicago Heights, Ill., assignor to Allis-Chalmers Corporation, Milwaukee, Wis.
Filed Jul. 18, 1978, Ser. No. 925,755
Int. Cl.³ F02B *75/06*
U.S. Cl. 123—192 B **10 Claims**

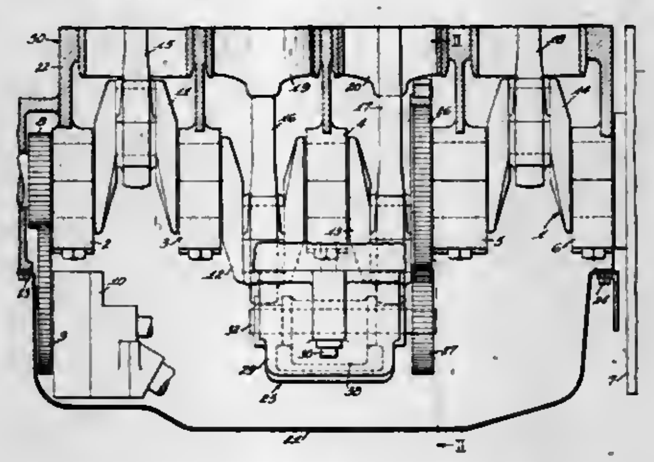

1. An engine balancer on a four cylinder in-line engine comprising, a crankshaft rotatably mounted on an axis of rotation, a plurality of main bearings rotatably supporting said crankshaft, a drive end of said crankshaft for the output drive of said crankshaft, a flywheel firmly fixed to said drive end of said crankshaft defining a nodal point of crankshaft torsional vibrations, a plurality of pistons connected through connecting rods driving said crankshaft, and engine balancer centrally mounted relative to said crankshaft including a pair of counterweights eccentrically mounted on axes of rotation parallel to said crankshaft axis, a balancer drive gear directly connected to said crankshaft adjacent one of the main bearings in the low torsional vibration amplitude area on the flywheel side of said balancer near the flywheel and said nodal point of torsional vibrations, driven gear means on the flywheel side of said balancer driven by said drive gear to thereby essentially eliminate transmission of torsional vibration from said crankshaft to said balancer.

4,300,494
THERMAL INSULATED INTAKE PORTS
Leonard B. Graiff, and Earl J. Haury, both of Houston, Tex., assignors to Shell Oil Company, Houston, Tex.
Filed Sep. 26, 1979, Ser. No. 78,866
Int. Cl.³ F02F *1/42*
U.S. Cl. 123—193 H **8 Claims**

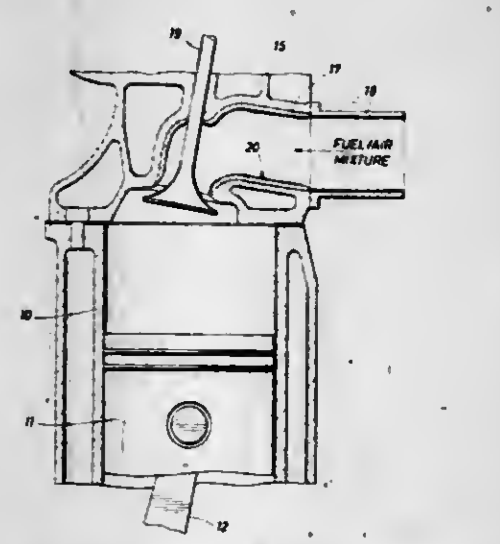

1. In a spark ignition reciprocating internal combustion engine for use with gasoline fuels said engine having an intake port area extending between an intake manifold and an intake valve, said valve disrupting flow of a fuel air mixture into a combustion chamber; the improvement which comprises having a substantial portion of the surface of said intake port area coated with a thermal insulating material for reducing transfer of heat to the fuel/air mixture which traverses said intake port area during operation of said engine, said insulating material consisting essentially of one of the group of polyphenylene sulfide alone and polyphenylene sulfide in combination with synthetic resinous polymeric materials having in their chemical structure at least one element selected from fluorine and silicon.

4,300,495
CAR THEFT PREVENTER
Carlos S. Trevino, and Isidro S. Trevino, both of 16311 Shamhart Dr., Granada Hills, Calif. 91344
Filed Sep. 21, 1979, Ser. No. 77,570
Int. Cl.³ B60R *25/04*
U.S. Cl. 123—198 B **2 Claims**

1. In combination, an internal combustion engine with an electric support system to maintain the engine operating, a power supply for the support system and a master control switch manually operable between open and closed positions connected in series between the power supply and the support system; a disabling system to shut off power to the support system and cause the engine to stop operating and including a normally closed relay switch series connected between the master control switch and the support system and an operating circuit operable to energize and cause time delayed operation and opening of the relay switch and including a normally open electrically powered time delay switching device connected with and between the relay and with the power supply between the support system and the master control switch, said switching device operating to close and cause the relay to open at the end of a predetermined period of time each time the master control switch is operated from its open position to its closed position; a manually operable on and off switch connected in series between the switching device and the power

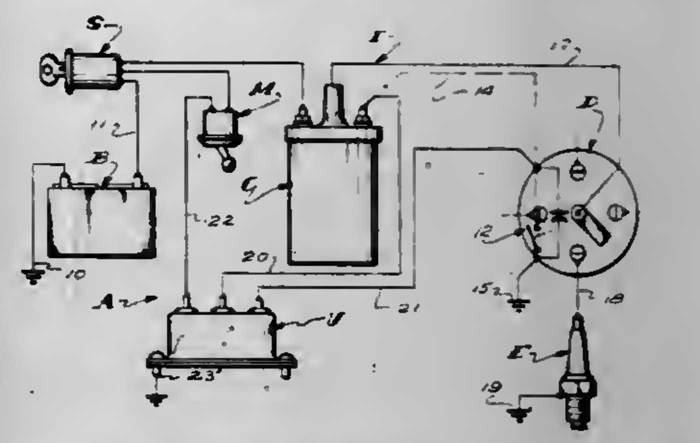

supply to selectively put the disabling system into and out of service; and an electrically powered signalling device connected with the power supply under control of the master control switch, a normally closed second relay switch series connected between the signalling device and its power source and a normally open second time delay switching device connected with the second relay switch and connected in parallel with the first mentioned time delay switching device and operating to open and to energize and cause the second relay switch to open following a predetermined period of time each time the master switch is operated from its open position to its closed position.

4,300,496
ATMOSPHERE EXCLUSION HOOD MEANS FOR INTERNAL COMBUSTION MOTORS OF PORTABLE RESCUE TOOLS AND RELATED EQUIPMENT AND THE LIKE
Robert A. Price, 1119 Wilson Rd., Edgewater, Md. 21037
Continuation-in-part of Ser. No. 70,359, Aug. 28, 1979, abandoned. This application Dec. 19, 1980, Ser. No. 218,359
Int. Cl.³ F02B *77/00*
U.S. Cl. 123—198 E **17 Claims**

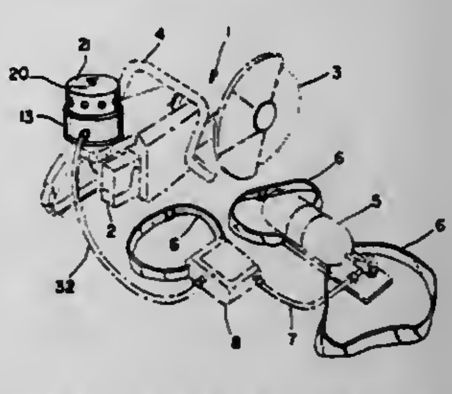

1. The combination with a portable rescue device useable by a rescue worker in fire and other rescue work and powered by an internal combustion motor including a carburetor, and a source of compressed air associated with said device, demand regulator valve means associated with said device and having a high pressure inlet side and a suction outlet side, said high pressure side being connected by conduit means to said compressed air source, atmosphere exclusion hood means mounted adjacent to said carburetor, openable and closeable apertures in said hood means for introducing atmospheric air thereinto

and to said carburetor, said hood means being interconnected by conduit means to the suction outlet side of said demand regulator valve means whereby when smoke, toxic fumes or a deficiency of oxygen is encountered said apertures are closable to seal said hood means against the entry of atmospheric air, and said demand regulator valve means controls the release of unadulterated air through said suction outlet side and said conduit means to said hood means and thence into said carburetor as the demand therefor is required by said carburetor and motor for insuring continued efficient operation thereof.

4,300,497
PREVAPORIZING DIESEL PRECOMBUSTION CHAMBER
William T. Webber, Los Angeles, Calif., assignor to Rockwell International Corporation, El Segundo, Calif.
Filed Jan. 30, 1980, Ser. No. 164,395
Int. Cl.³ F02B *3/00*
U.S. Cl. 123—254 **9 Claims**

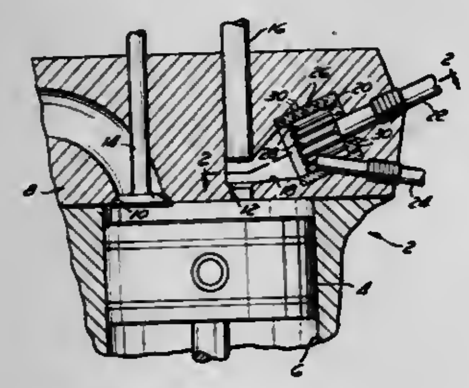

1. A diesel engine comprising:
a cylinder;
a piston slidable within said cylinder;
a precombustion chamber having a generally rectangular portion located in the path of air entering said chamber, and a pair of generally circular portions located on opposite sides of said rectangular portion;
an opening communicating said rectangular portion of said precombustion chamber with said cylinder;
valve means operable near the beginning of the exhaust stroke of said piston to close said opening;
fuel injector means for delivering fuel into said precombustion chamber shortly after closing of said valve means; and
means for actuating said valve means near the end of the compression stroke of said piston to open said opening to allow compressed air from said cylinder to rush into said rectangular portion of said precombustion chamber.

4,300,498
AUTO-IGNITING, FOUR-CYCLE, PISTON-TYPE INTERNAL COMBUSTION ENGINE
Michael G. May, Bel Air, CH-1180 Rolle, Switzerland
Filed Apr. 25, 1980, Ser. No. 143,408
Claims priority, application Fed. Rep. of Germany, Aug. 28, 1979, 2934615
Int. Cl.³ F02B *19/08, 23/02*
U.S. Cl. 123—263 **28 Claims**

1. A self-igniting four-cycle internal combustion engine comprising: cylinder means, cylinder head means attached to said cylinder means, a piston having a top moving reciprocatingly within said cylinder means thereby defining a combustion chamber of varying geometry, the cylinder head means comprising inlet and outlet ports closable by corresponding inlet and outlet valves comprising valve plates, a depression means formed selectively in one of said cylinder head means, said piston top, or partially incorporated in opposite portions of both of said piston top and cylinder head, said depression means being of compact type and forming a main combustion chamber, and being offset in respect to the central axis of the cylinder means in such a manner as to leave a large squish area or squish zone in the remaining area of the cylinder head means and the piston top when the piston reaches its top dead center position; at least one wide and shallow guide groove being provided in said squish zone in which at least one of said valve plates may intrude in that area of the guide groove where said guide groove originates, said guide groove leading substan-

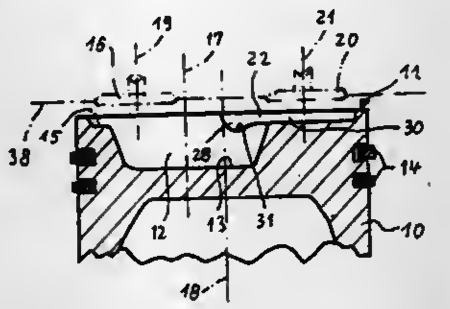

tially tangentially toward said depression means so as to generate or reinforce therein a vortex flow by the exclusive action of the impulse transfer generated by the glass being squished out of the squish zone when the piston approaches its top dead center position and being partially collected in said guide groove and directed toward said chamber in said tangential manner where they impinge upon the charge contained in said chamber.

4,300,499
COMBUSTION CHAMBER OF AN INTERNAL COMBUSTION ENGINE
Kiyoshi Nakanishi; Takeshi Okumura; Ryuichi Deguchi, all of Susono, and Toshio Tanahashi, Toyota, all of Japan, assignors to Toyota Jidosha Kogyo Kabushiki Kaisha, Toyota, Japan
Filed May 15, 1979, Ser. No. 39,182
Claims priority, application Japan, Jul. 20, 1978, 53-87671
Int. Cl.³ F02B *31/00;* F02F *3/28*
U.S. Cl. 123—307 **17 Claims**

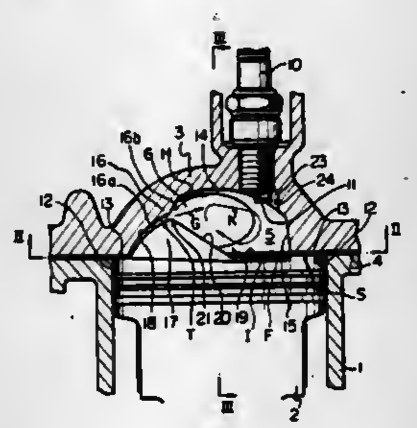

1. An internal combustion engine comprising a cylinder block having a cylinder bore therein; a cylinder head mounted on said cylinder block and having an inner wall; a first raised portion having on its lower end a flat bottom face and being formed on the periphery of the inner wall of said cylinder head so as to project downwards; a piston reciprocally movable in said cylinder bore and having a top face which has a flat peripheral portion approachable to said flat bottom face so as to create a first squish area therebetween at the end of the compression stroke for spouting out a first squish flow along the top face of said piston; a combustion chamber defined by the top face of said piston and the inner wall of said cylinder head; and intake valve movably mounted on said cylinder head for leading a combustible mixture into said combustion chamber; an exhaust valve movably mounted on said cylinder head for discharging exhaust gas into the atmosphere; a second raised portion formed on the top face of said piston at a position opposite to said first raised portion with respect to an axis of said piston and having a rear face and a front face exposed to said combustion chamber, said rear face being approachable to the inner wall of said cylinder head so as to create a second squish area therebetween at the end of the compression stroke for spouting out a second squish flow which moves forward in the upper interior of said combustion chamber in the direction opposite to the spouting direction of said first squish flow, said first and second squish flows cooperating with each other to create a strong swirl motion rotating about a horizontal axis in said combustion chamber, and; a spark plug having a spark gap located in said combustion chamber, wherein the front face of said second raised portion comprises a gently inclined front face portion located beneath said exhaust valve, and a steeply inclined front face portion located beneath said intake, said gently inclined portion having a greater surface area than said steeply inclined portion, said inclined portions extending in substantially the same direction, said inclined portions each having a planar face, and being disposed such that a line drawn horizontally across the planar face of the gently inclined portion is substantially parallel to a line drawn horizontally across the planar face of the steeply inclined portion.

4,300,500
INTAKE SYSTEM OF A MULTI-CYLINDER INTERNAL COMBUSTION ENGINE
Katsuhiko Motosugi; Hiroshi Takahashi; Shuhei Toyoda, and Toshio Tanahashi, all of Toyota, Japan, assignors to Toyota Jidosha Kogyo Kabushiki Kaisha, Toyota, Japan
Filed Jul. 20, 1979, Ser. No. 59,149
Claims priority, application Japan, Aug. 10, 1978, 53/97601
Int. Cl.³ F02M *13/06*
U.S. Cl. 123—308 **19 Claims**

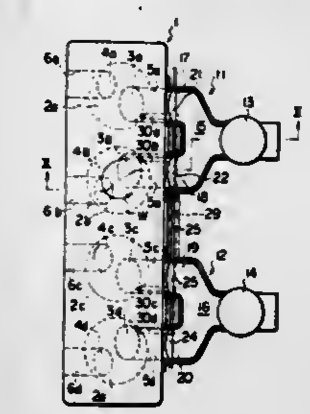

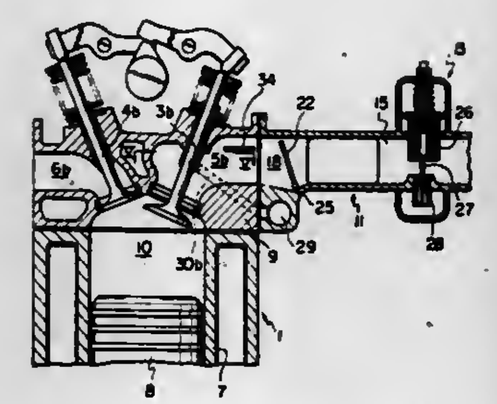

1. A multi-cylinder internal combustion engine, each cylinder having a combustion chamber and an intake valve which has a valve head, said engine comprising:
at least one intake passage common to at least two cylinders and comprising a collecting portion having an inlet, and at least two branch intake passages branched off from said collecting portion, each of said branch intake passages having an upper wall and a bottom wall and being connected to a respective one of said combustion chambers via a corresponding one of said intake valves;
fuel supply means arranged in the inlet of said collecting portion;
a common connecting passage;
at least two branch connecting passages each being connected to said common connecting passage and having an opening which opens into a respective one of said branch intake passages, wherein the opening of each of said branch connecting passages is tangentially connected to an inner wall of a respective one of said branch intake passages, said wall extending circumferentially about an axis of said corresponding intake valve; and
at least two rotatable throttle valves each being arranged in a respective one of said branch intake passages at a position upstream of the opening of a corresponding one of said branch connecting passages and having a lower edge and an upper edge which cooperates with the upper wall of said corresponding branch intake passage to form therebetween a mixture flow passage, the cross sectional area of which is increased as the corresponding throttle valve is rotated in accordance with an increase in the level of the load of said engine, the lower edge of each of said throttle valves cooperating with the bottom wall of said corresponding branch intake passage to prevent flow between the lower edge of said throttle valve and the bottom wall of said corresponding branch intake passage at least when the valves are opened less than a predetermined degree.

4,300,501
APPARATUS FOR CONTROLLING THE ROTATIONAL SPEED OF AN I.C. ENGINE IN AN IDLING OPERATION
Suzuo Suzuki, Yokosuka, Japan, assignor to Nissan Motor Company, Limited, Yokohama, Japan
Filed Dec. 12, 1978, Ser. No. 968,723
Claims priority, application Japan, Dec. 28, 1977, 52-159578
Int. Cl.³ F02M *3/06*
U.S. Cl. 123—339 **17 Claims**

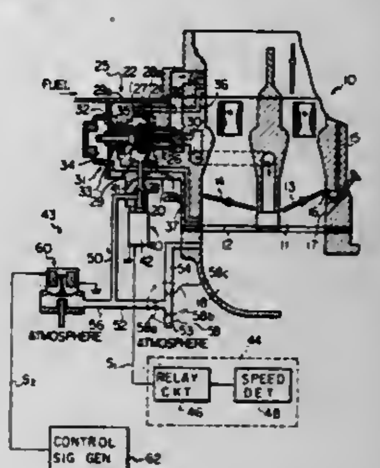

1. Apparatus for controlling the rotational speed of an internal combustion engine of a vehicle in an idling operation, said engine being equipped with a carburetor having a by-pass air-fuel mixture supply passageway communicating between a source of air-fuel mixture supply and the intake manifold of said engine for supplying the intake manifold with an additional air-fuel mixture, a valve assembly disposed in said passageway to control the cross sectional area of said passageway, and an expansible chamber operatively connected to said valve assembly, wherein the improvement comprises:
(a) first passage selectively in fluid flow relation between said expansible chamber and a source of vacuum pressure of a predetermined value;
(b) a second passage connected in fluid flow relation between said first passage and atmosphere;
(c) a solenoid operated valve means interposed in said second passage for selectively shutting said second passage in response to an electrical signal fed thereto;
(d) a control signal generator for producing said electrical signal in accordance with the engine speed only when the engine is in an idling operation;

wherein said source of vacuum pressure comprises a third passage communicating with said intake manifold and a fourth passage communicating with the atmospheric air, and a fifth passage connected in fluid flow relation with said first passage, said third, fourth and fifth passages being joined at a junction, each of said third, fourth and fifth passages having an orifice in the vicinity of said junction.

4,300,502
FUEL FLOW CONTROL SYSTEM FOR INTERNAL COMBUSTION ENGINES
Vernon J. Driggers, Scranton, S.C., assignor to Driggers & Associates, Inc., Scranton, S.C.
Continuation-in-part of Ser. No. 899,405, Apr. 24, 1978, Pat. No. 4,186,707. This application Feb. 4, 1980, Ser. No. 117,971
Int. Cl.³ F02M *37/04*
U.S. Cl. 123—389 **8 Claims**

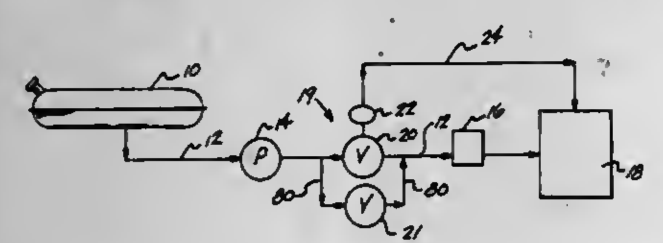

1. In a fuel supply system for an internal combustion engine including a fuel supply tank, a fuel supply line connecting the tank to the fuel inlet of a carburetor of the engine, and a fuel pump in the supply line between the tank and carburetor for delivering fuel to the inlet of the carburetor; the improvement therein comprising:
fuel metering valve means located in the fuel line between the fuel supply pump and the inlet to the carburetor and incrementally adjustable between a closed and fully open position, and means operatively associated with said metering valve means for incrementally and automatically adjusting the metering valve means in response to variations in the engine load conditions during operating periods, including acceleration and deceleration of the engine, from a closed position at a predetermined low load condition on the engine while correspondingly increasing the fuel flow therethrough to the carburetor in response to increasing load conditions on the engine above said predetermined low load condition, and
a self-operated pressure regulator valve located in the fuel supply line in parallel with said metering valve means between the fuel supply pump and the inlet to the carburetor for ensuring at least a predetermined minimum fuel pressure and fuel flow to said carburetor independent of operating conditions of the engine.

4,300,503
PROCESS AND SYSTEM FOR COMPUTATION AND ADJUSTMENT OF OPTIMUM IGNITION ADVANCE
Robert Deleris, Bailly, and Bernard Lepretre, Boulogne-Billancourt, both of France, assignors to Regie Nationale des Usines Renault, Billancourt, France
Filed Apr. 17, 1980, Ser. No. 141,147
Claims priority, application France, Apr. 26, 1979, 79 10598
Int. Cl.³ F02D *5/04*; F02P *11/02*
U.S. Cl. 123—425 **12 Claims**

1. A process for the computation and adjustment of the optimum ignition advance for an internal combustion engine by means of a system for detection of knocking using a sensor such as an accelerometer rigidly attached to the cylinder head of the engine, comprising:
integrating an accelerometer signal inside a given window;
converting the integrated accelerometer signal into digital form;
computing an average value $\overline{C}$ proportional to the n preceding knocks;
computing two comparison thresholds S_1 and S_2, each a linear function of the previously computed average value $\overline{C}$;

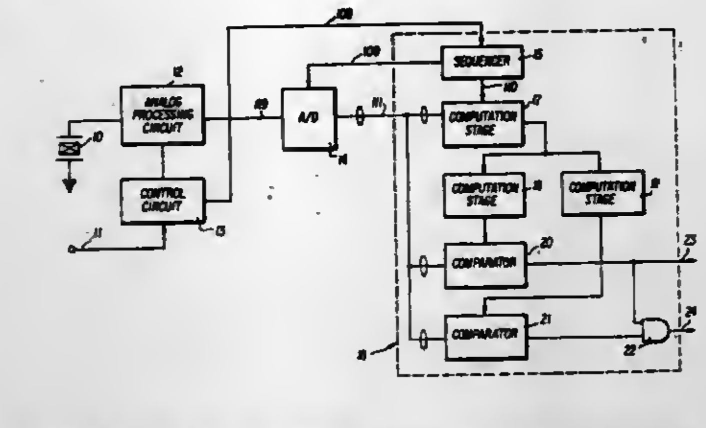

comparing the accelerometer value integrated in digital form with each of the thresholds S_1 and S_2;
deducing the existence of absence of a preknocking and/or audible knocking value; and
using said value to act on the programmed advance of the electronic ignition.

4,300,504
INTERNAL COMBUSTION ENGINE
Etsuhiro Tezuka, Hamatsu, Japan, assignor to Yamaha Hatsudoki Kabushiki Kaisha, Iwata, Japan
Filed Aug. 8, 1979, Ser. No. 64,832
Claims priority, application Japan, Aug. 10, 1978, 53-96729
Int. Cl.³ F02M *35/10*
U.S. Cl. 123—432 **6 Claims**

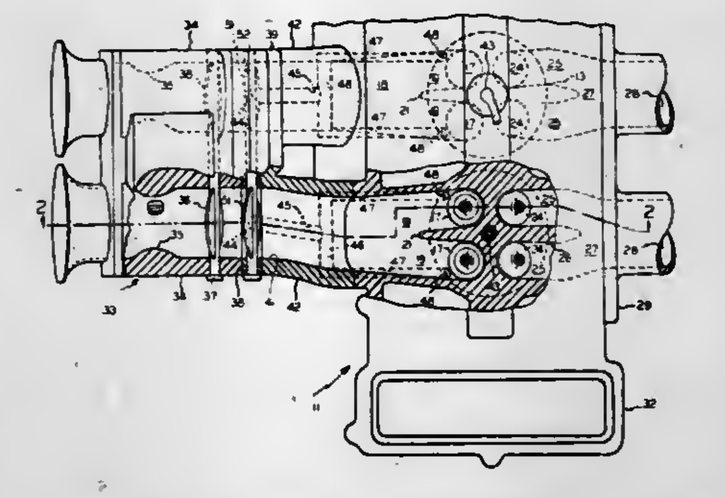

1. In an internal combustion engine having a variable volume chamber in which combustion occurs, a spark plug for firing a charge in said chamber, a pair of main intake ports and a pair of main intake passages each communicating with said chamber through a respective of said main intake ports for delivering a charge therethrough, the improvement comprising a pair of auxiliary intake ports and a pair of auxiliary intake passages each communicating with said chamber through a respective of said auxiliary ports, said auxiliary intake passages having an effective cross-sectional area substantially less than the effective cross-sectional area of said main intake passages for causing a given mass flow of charge through said auxiliary intake ports to enter said chamber at a significantly greater velocity, said auxiliary intake ports being oriented relative to said chamber and said spark plug for directing the charge entering said chamber through said auxiliary intake ports in a flow path that passes across said spark plug at the time of ignition, valve means for controlling the ratio of communication of said passages with the chamber, and actuating means for operating said valve means so that a substantial portion of the idle and low load requirements for the chamber are delivered through said auxiliary intake passages and a substantial portion of the high load charge requirements are supplied through said main intake passages.

4,300,505
AIR FUEL RATIO CONTROL DEVICE
Shigetaka Takada, Obbu; Kazusato Kasuya, Kariya, and Yukihiro Watanabe, Nagoya, all of Japan, assignors to Aisan Industry Co., Ltd., Aichi, Japan
Filed Jul. 12, 1979, Ser. No. 56,757
Claims priority, application Japan, Aug. 7, 1978, 53-95995
Int. Cl.³ F02M *23/04*; F02B *3/00, 75/10*
U.S. Cl. 123—445 **4 Claims**

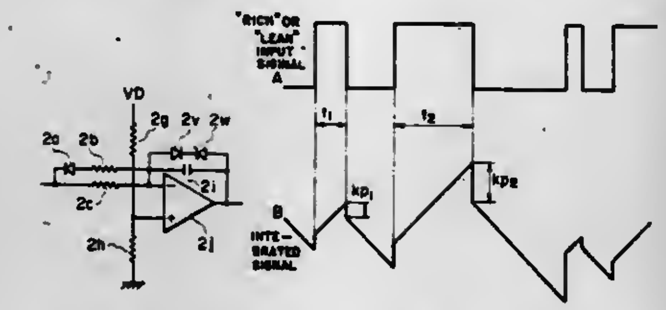

1. An air-fuel ratio control device comprising,
means comprising an exhaust gas sensor provided in an exhaust system of an internal combustion engine supplied with an air-fuel mixture for detecting the concentration of exhaust gas components,
means comprising a control circuit for determining from a signal sent from said exhaust gas sensor whether the air-fuel mixture is lean or rich providing a "rich" or "lean" input signal, and thereafter generating a control signal based on the "rich" or "lean" signal, and
a fuel supply means for controlling the air-fuel ratio of the air-fuel mixture according to the control signal from the control circuit and supplying the controlled air-fuel mixture to the engine,
means comprising said control circuit for providing said control signal with a proportional sensitivity component with a magnitude of said proportional sensitivity component such that said magnitude is substantially proportional to the duration of the "rich or "lean" signal,
said control circuit comprises,
a comparator means connected to said exhaust gas sensor and to a reference voltage for providing said "rich" or "lean" input signal at an output of said comparator means,
a "rich" skip circuit and a "lean" skip circuit connected to said output,
an integrating circuit connected to said output of said comparator means and to said skip circuits,
said skip circuits comprise means for providing said proportional sensitivity component,
each of said skip circuits comprises,
a Miller integrator having a capacitor, said Miller integrator is connected to the output of said comparator means and to a predetermined reference voltage, said Miller integrator is adapted to have a Miller integrator output of an upper limit,
a comparator having one input connected to the Miller integrator output and another input connected to a reference value set slightly lower than said upper limit,
a skip gate means operatively connected to said capacitor and to said integrating circuit,
and AND gate having one input connected to an output of said comparator and another input operatively connected to said output of said comparator means and having an output connected to said skip gate means, said skip gate means for causing an integrated value of the integrating circuit to rapidly change when said input signal at the output of said comparator means inverts and while said AND gate is actuated,
said capacitor is arranged to be charged by said "rich" or "lean" input signal before said input signal inverts, causing said Miller integrator output to decrease at a constant rate, and to be discharged when said input signal inverts, causing said Miller integrator output to reach said upper limit in a time proportional to the duration of the preceding said "rich" or "lean" input signal prior to shifting, said comparator being adapted to change its output signal when said upper limit is reached at said Miller integrator output, whereupon said AND gate is deactuated to inactivate said skip gate means.

4,300,506
FUEL SUPPLY SYSTEM
Heinrich Knapp, Leonberg, and Wolfgang Rehmann, Asperg, both of Fed. Rep. of Germany, assignors to Robert Bosch GmbH, Stuttgart, Fed. Rep. of Germany
Filed Jul. 20, 1979, Ser. No. 59,362
Claims priority, application Fed. Rep. of Germany, Aug. 18, 1978, 2836215
Int. Cl.³ F02M *9/08*
U.S. Cl. 123—478 **3 Claims**

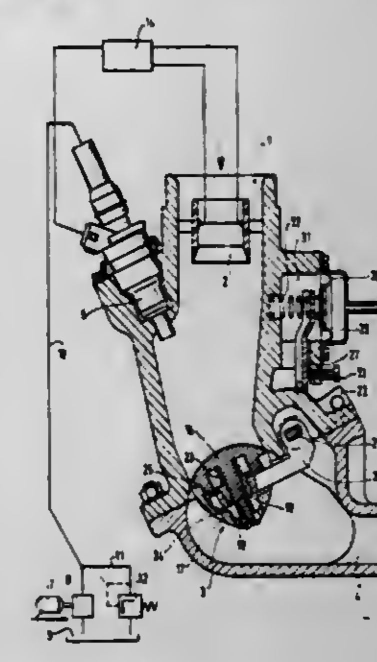

1. A fuel supply system for mixture-compressing, spark-ignited internal combustion engines having an air intake manifold; an arbitrarily operable throttle element disposed within said intake manifold; a bearing shaft spaced from said throttle element; a rocking lever connected at one end to said bearing shaft outside of the air flow of said air intake manifold; with said throttle element mounted on the opposite end of said rocking lever for movement in the direction of air flow; a compensating spring operative between said throttle element and said rocking lever; said throttle element being mounted on said rocking lever so as to be displaceable in an opening direction against the bias of said compensating spring; means upstream of said throttle element for supplying a fuel-air mixture, said throttle element being mounted on said rocking lever in said intake manifold so that it is surrounded by fuel-air flow during an opening movement in the direction of fuel-air flow and so positioned that said throttle element can be corrected in dependence on pressure drop present at the throttle element against the bias of said compensating spring.

4,300,507
SYSTEM CONTROLLING ANY AIR/FUEL RATIO WITH STOICHIOMETRIC SENSOR AND ASYMMETRICAL INTEGRATION

Junuthula N. Reddy, Troy, Mich., assignor to The Bendix Corporation, Southfield, Mich.

Division of Ser. No. 791,092, Apr. 26, 1977, which is a continuation of Ser. No. 553,050, Feb. 25, 1975. This application May 24, 1978, Ser. No. 909,077
Int. Cl.³ F02D *5/00*
U.S. Cl. 123—489 6 Claims

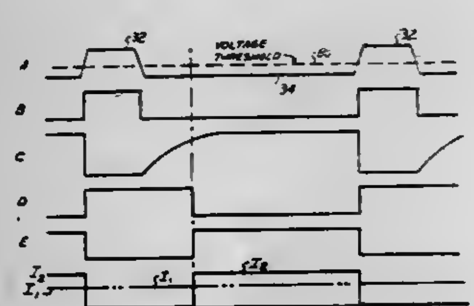

5. A mixture control system for an internal combustion engine including means for supplying mixture of air and fuel thereto in a variable ratio depending upon a signal representative of the concentration of a predetermined constituent gas of the emissions from said engine, and an exhaust gas sensor for generating said signal having a sharp transition in amplitude in response to the presence of said predetermined constituent gas being above or below a predetermined value corresponding to an air-fuel ratio at or near stoichiometry, comprising:
means for generating a deviation signal representitive of the deviation of said transitional signal from a reference representing said predetermined air-fuel ratio, said deviation signal having first and second voltage levels depending upon whether said transitional signal is above or below said predetermined value;
means for extending the duration of said deviation signal at said first voltage level a predetermined time; and
means for integrating said duration-extended deviation signal with time to generate a time integral signal.

6. A method of operating a closed-loop mixture control system at a desired air-fuel ratio in an internal combustion engine including an exhaust gas sensor operable to generate a signal having a sharp transition in amplitude between first and second voltage levels in response to the presence of a predetermined constituent gas being above or below a predetermined concentration in the emissions from said engine, comprising: the steps of comparing the transitional signal with a reference level representing a predetermined air-fuel ratio to generate a signal representing the deviation of said transitional signal from said reference level; integrating said deviation signal with time to generate a time integral signal having an amplitude varying in accordance with the direction of said deviation; and extending the duration of said deviation signal by a predetermined amount prior to said integration to permit said time integral signal to increase in amplitude corresponding to said predetermined amount, whereby said time integral signal fluctuates about a level different from said predetermined air-fuel ratio.

4,300,508
INSTALLATION FOR OPERATING ELECTROMAGNETIC LOADS IN INTERNAL COMBUSTION ENGINES

Klaus Streit, Tübingen; Walter Buxmeyer, Pfullingen; Peter Schülzke, Hemmingen, and Klaus Harsch, Ditzingen, all of Fed. Rep. of Germany, assignors to Robert Bosch GmbH, Stuttgart, Fed. Rep. of Germany

Filed Aug. 17, 1979, Ser. No. 67,643
Claims priority, application Fed. Rep. of Germany, Sep. 26, 1978, 2841781
Int. Cl.³ F02D *5/00;* H01F *7/18*
U.S. Cl. 123—490 4 Claims

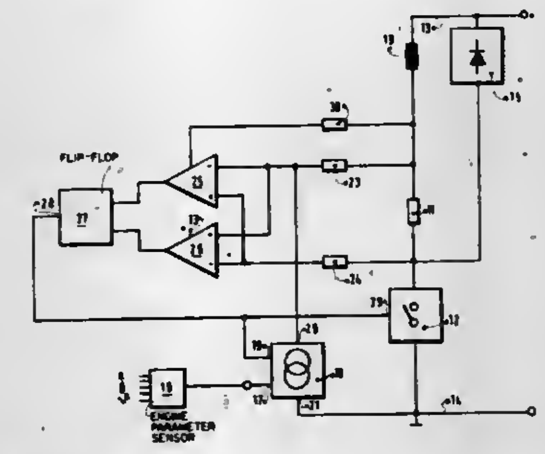

1. An installation for the operation of electromagnetic loads, especially solenoid valves, in the fuel supply systems of internal combustion engines having supply voltage lines, including:
a switch;
a switching element;
first and second threshold switches connected to control the switching element;
a resistor wherein each end of the resistor is connected to an input of each of the first and second threshold switches to regulate the first and second threshold switches, and;
wherein said electromagnetic load, the switch and the resistor are connected in series between the supply voltage lines;
at least one further resistor connected to at least one input of the first and second threshold switches to regulate said at least one input; and
a controllable current source connected at one end between a junction of the first threshold switch and the at least one further resistor and connected at a second end to one of the supply voltage lines.

4,300,509
FUEL INJECTION AND CONTROL SYSTEMS

Michael M. Schechter, Southfield, Mich., assignor to Ford Motor Company, Dearborn, Mich.

Filed Oct. 6, 1980, Ser. No. 193,984
Int. Cl.³ F02B *3/00*
U.S. Cl. 123—499 9 Claims

1. A fuel injection and control system for an automotive type internal combustion engine of the spark ignition type, including a fuel injector assembly including a fuel injector of the spring closed, fuel pressure opened type, a plunger type electromagnetically operated fuel pump having a plunger movable through a pumping stroke upon energization of the electromagnetic means to increase the fuel pressure to a level sufficient to open the injector and through a fuel intake stroke upon deenergization of the electromagnetic means, and a fluid pressure actuated fuel pump stroke control connected to the plunger and movable to limit the stroke of the plunger as a function of changes in the fluid pressure to thereby vary the volume of fuel and timing of fuel injected through the injector, a source of fuel at a low supply pressure connected to the assembly supplying fuel to the plunger during the intake stroke thereof, a fuel flow return line for containing fuel leakage past the plunger, means applying the return fuel to the stroke control for actuating the control to various positions as a function of changes in the return fuel pressure, and an engine responsive

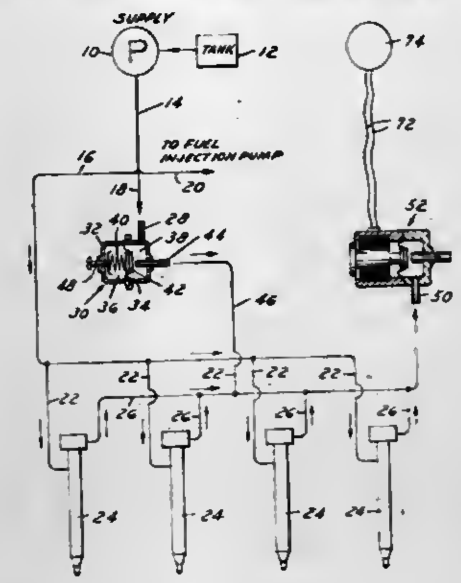

electromagnetically controlled fuel pressure regulator connected to the return line for varying the return fuel pressure as a function of changes in engine operation to thereby vary the stroke of the pump plunger.

4,300,510
FUEL PRESSURE REGULATOR OF FUEL INJECTION SYSTEM

Yoshiyuki Ishida, Tokyo, and Seikoh Satoh, Yokohama, both of Japan, assignors to Nissan Motor Company, Limited, Yokohama, Japan

Filed Jun. 20, 1979, Ser. No. 50,155
Claims priority, application Japan, Jun. 23, 1978, 53-76260
Int. Cl.³ F02M *37/04*
U.S. Cl. 123—512 7 Claims

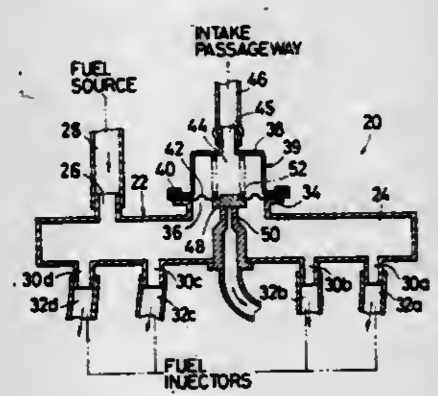

1. A fuel pressure regulator for use in a fuel injection system of a gasoline fueled internal combustion engine, said fuel pressure regulator comprising:
a fuel distributor pipe defining therein a fuel chamber, having a fuel inlet through which the fuel chamber communicates with a fuel source, and a plurality of fuel outlets equal to the number of fuel injectors, said fuel outlets communicating with the fuel chamber, and both ends of said fuel distributor pipe being open;
a plurality of fuel supply conduits, each fuel supply conduit directly connecting one of said outlets with a fuel injector;
a casing directly connected to said fuel distributor pipe to constitute an integral unit, said casing defining therein a vacuum chamber which communicates with an intake passageway of the engine;
a diaphragm member secured at a section where said distributor pipe and said casing are connected to each other, to separate said fuel chamber and said vacuum chamber, said diaphragm member being provided with a valve member;
a fuel discharge nozzle through which the fuel in said fuel chamber is dischargeable, said nozzle being disposed in said fuel chamber and closable with said valve member to prevent the fuel in said fuel chamber from being discharged out of said fuel chamber; and
damper means communicating with said fuel chamber for absorbing the fuel pressure pulsation applied to the fuel in said fuel chamber of said fuel distributor pipe, said damper means including first and second dampers which are respectively provided at both open end portions of said fuel distributor pipe, each of said dampers including a diaphragm member secured to close the open end portion of said fuel distributor pipe.

4,300,511
MULTI-FUNCTIONAL ASSEMBLY

Jerome G. Lang, Ann Arbor, Mich., assignor to Chrysler Corporation, Highland Park, Mich.

Filed May 14, 1980, Ser. No. 149,811
Int. Cl.³ F02M *33/02, 37/02*
U.S. Cl. 123—520 10 Claims

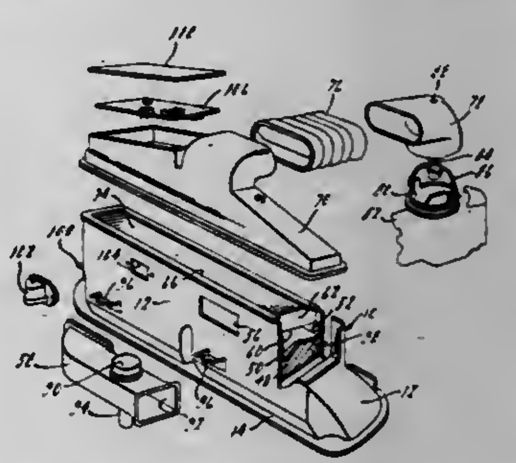

1. A unitary and multifunctional structure for a vehicle engine including a cylinder head and valve components thereon, comprising; a hollow multi-cell housing formed of light weight but strong material and having a peripheral edge portion adapted to engage the cylinder head about the valve components thereby preventing the leakage of lubricating oil between the unitary structure and the cylinder head; first interior wall means spaced outward from the cylinder head and valve components thereon forming a substantially sealed enclosure thereabout; second interior wall means spaced outwardly from the first wall means thereby forming an interior space therebetween which is filled with a fuel vapor absorbing material such as charcoal; an air filter element supported so that one end portion is located above the second wall means to form an air inlet plenum therebetween; means for ducting atmospheric air to the air inlet plenum; cover means about the opposite end portion of the air filter element forming an air outlet plenum to direct cleaned air from the filter element toward an engine air inlet.

4,300,512
MHD ENGINE

Dennis L. Franz, Rte. #1, Box 1198-B, Selah, Wash. 98942

Filed Mar. 5, 1979, Ser. No. 17,258
Int. Cl.³ F02B *75/02*
U.S. Cl. 123—536 35 Claims

1. An internal combustion engine comprising a plurality of cylinders having inner cylinder walls,
a plurality of pistons in said cylinders having faces thereon,
a magnetohydrodynamic generator,
means for passing ionized exhaust gas from said cylinders through said magnetohydrodynamic generator,
said magnetohydrodynamic generator passing a magnetic field through said exhaust gas,
means for conducting electric current generated in said generator to said pistons, and
a plurality of electrodes arranged around the face of each

piston for receiving said electric current and generating electron beams through said cylinders for establishing a

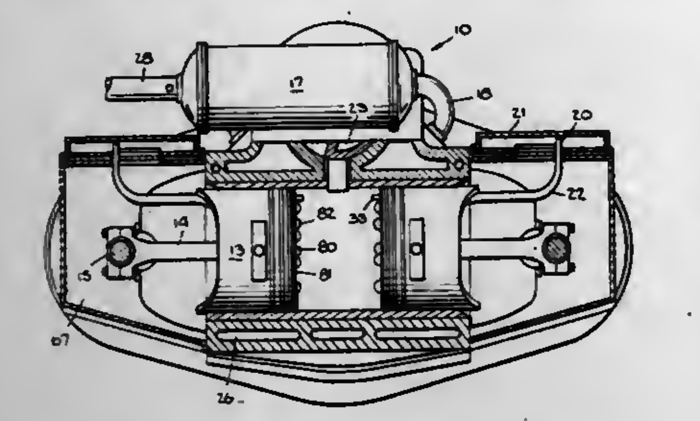

magnetic field in said cylinders around said inner cylinder walls to insulate the combustion gases in said cylinders from said inner walls of said cylinders.

4,300,513
CARBURETOR ATTACHMENT
Dennis A. Ray, Marin Ave., Rte. 1, Crookston, Minn. 56716
Filed Sep. 28, 1979, Ser. No. 79,788
Int. Cl.³ F02M *31/00*
U.S. Cl. 123—545 13 Claims

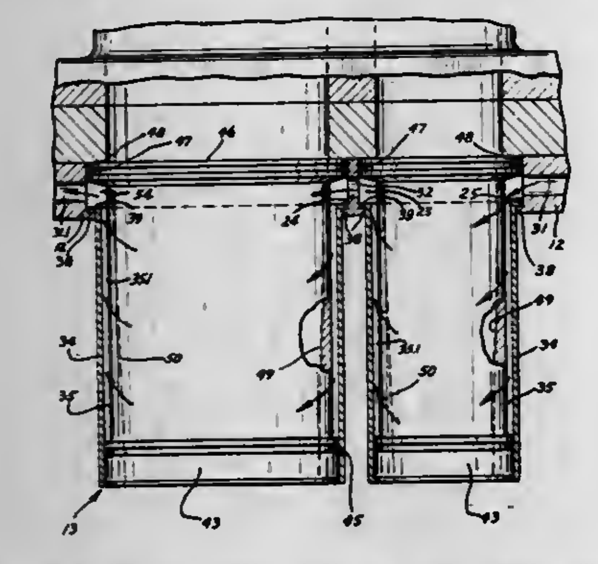

1. An attachment for connection with the cooling system of an internal combustion engine and for insertion between the carburetor and the intake manifold of the engine, comprising
heat transfer means including upright heat transfer tubes to be positioned between and in open communication with the air-fuel mixture conveying passages of the carburetor and intake manifold to pass the air-fuel mixture therethrough,
heat supplying means mounting and confining the outer peripheries of the heat transfer tubes and cooperating with the tubes in defining closed end annular heating fluid chambers around the tubes, the heat supplying means including a rigid plate to lie between the carburetor and intake manifold, the plate having transverse openings through which the heat transfer tubes extend, the peripheries of the transverse openings defining portions of said annular chambers,
the tubes and heat supplying means maintaining the interiors of the tubes and said annular chambers in fluid flow isolation relative to each other,
the plate having duct means therethrough in open flow communication with the transverse openings to direct hot engine coolant to and through the annular heating fluid chambers, the duct means having inlet and outlet ends for flow connections with the cooling system of the engine, and
the inner peripheries of the tubes being tapered convergently in a downward direction and having a multiplicity of substantially annular sharp cornered surface undulations defining upwardly facing ledges adjacent the sharp corners.

4,300,514
DEVICE FOR VAPORIZING FUEL AND CONTROLLING THE TEMPERATURE OF THE FUEL IN AN INTERNAL COMBUSTION ENGINE
Josef Schaich, Oschle 118, 7906 Markbronn, Fed. Rep. of Germany
Filed Sep. 14, 1979, Ser. No. 75,832
Int. Cl.³ F02M *31/00*
U.S. Cl. 123—557 5 Claims

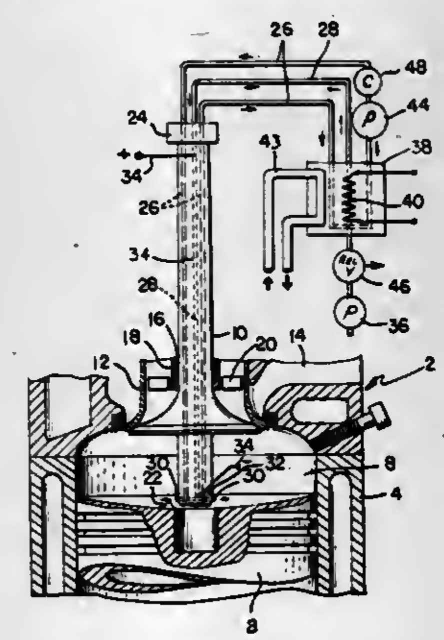

1. In an internal combustion engine including a combustion chamber, a mixture formation device comprising: a nozzle carrier having at least one fuel nozzle opening into said combustion chamber, a source of liquid fuel, fuel vaporizing means connected to said source of fuel for vaporizing the liquid fuel by heating the liquid fuel, a fuel conduit in said nozzle carrier connected to said fuel vaporizing means and to said nozzle for conveying the vaporized fuel to the nozzle, a closed loop recirculating system comprising: a conduit loop having a portion thereof in said nozzle carrier in close proximity to said nozzle and a portion thereof in said nozzle carrier in close proximity to said fuel conduit and a portion thereof in said fuel vaporizing means in heat exchange relation with the fuel in said fuel vaporizing means, and pump means for circulating a fluid through said closed loop conduit, whereby heat from the nozzle region of the nozzle carrier is imparted to the liquid fuel in the fuel vaporizing means and to the vaporized fuel in said fuel conduit.

4,300,515
APPARATUS FOR ACTUATING AN ADJUSTMENT DEVICE ACTING UPON A CONTROL APPARATUS FOR EXHAUST RECIRCULATION IN INTERNAL COMBUSTION ENGINES
Max Straubel; Gerhard Stumpp, both of Stuttgart; Klaus Krieger, Affalterbach, and Wolf Wessel, Oberriexingen, all of Fed. Rep. of Germany, assignors to Robert Bosch GmbH, Stuttgart, Fed. Rep. of Germany
Filed Nov. 20, 1979, Ser. No. 96,072
Claims priority, application Fed. Rep. of Germany, Dec. 20, 1978, 2855027
Int. Cl.³ F07M *25/06*
U.S. Cl. 123—568 6 Claims

1. An apparatus for load-dependent actuation of an exhaust recirculation adjustment device in an internal combustion engine comprising a fuel injection pump, said fuel injection pump including a fuel supply chamber, a threshold comparison apparatus within said fuel supply chamber and a fuel quantity adjustment device adjustable in accordance with load, said threshold comparison apparatus including means defining plural passages, a first of said passages being stationary and a second of said passages being adjustable in accordance with the actuation of said fuel quantity adjustment device, said exhaust recirculation adjustment device including a valve for controlling exhaust gases from an exhaust manifold to an intake manifold and a hydraulic servomotor including an adjustment device connected to said valve for adjusting said valve, a pressure control line connected between said hydraulic servomotor and said first passage of said threshold comparison apparatus wherein the alignment of said first and second passages provides for a discharge of fuel under pressure from said

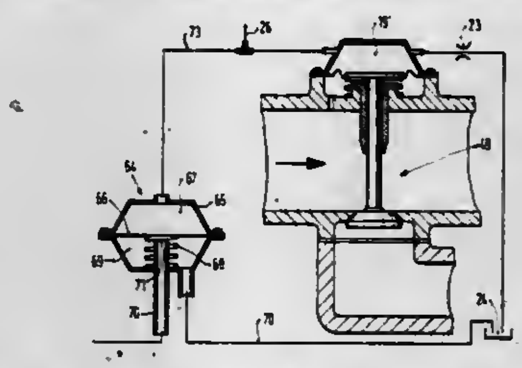

fuel supply chamber of said injection pump into said control line and the flow of fuel out of the fuel supply chamber acts as a control variable for the actuation of said exhaust recirculation adjustment device; and a first relief line including an adjustable throttle connected between said hydraulic servomotor and a fuel supply; further wherein said fuel injection pump includes a second relief line connected thereto which extends away from said fuel supply chamber, said second relief line containing a scavenging throttle which is thereby capable of adjusting a scavenging fuel quantity, a pressure switch connected with said control line and said second relief line, said pressure switch arranged to control fluid flow through said second relief line.

4,300,516
SYSTEM AND METHOD FOR CONTROLLING EXHAUST GAS RECIRCULATION
Yukio Hayakawa, Kawasaki, Japan, assignor to Nissan Motor Company, Ltd., Yokohama, Japan
Filed May 12, 1980, Ser. No. 148,938
Claims priority, application Japan, May 15, 1979, 54-58679
Int. Cl.³ F02M *25/06*
U.S. Cl. 123—571 9 Claims

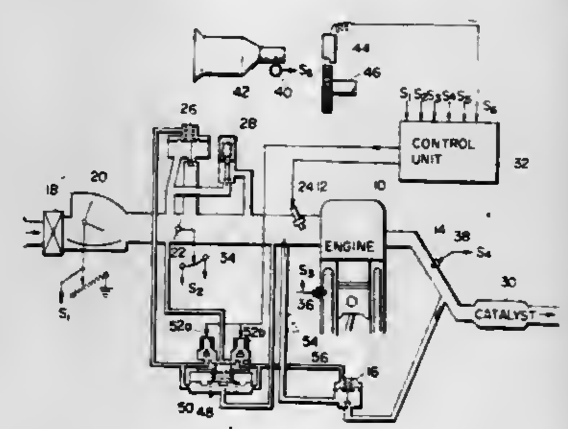

1. An exhaust gas recirculation control system for an internal combustion engine of a motor vehicle, comprising:
an exhaust gas recirculation control valve for controlling the amount of exhaust gas recirculated back from an intake system of the engine to an intake system of the engine when opened, in accordance with operating condition of the vehicle; and
means for fully opening said exhaust gas recirculation control valve for a predetermined period of time when the operating condition of the vehicle reaches a predetermined level.

4,300,517
FUEL SUPPLY DEVICE FOR A DIESEL ENGINE
Jury L. Astansky, prospekt Lenina, 47, korpus 2, kv. 55; Vladimir A. Romanov, prospekt Lenina, 24"B", kv. 92, and Vladimir A. Osadin, ulitsa Uspenskogo, 15, kv. 51, all of Gorky, U.S.S.R.
Filed May 6, 1980, Ser. No. 147,243
Int. Cl.³ F02M *25/00, 13/00, 43/00*
U.S. Cl. 123—575 2 Claims

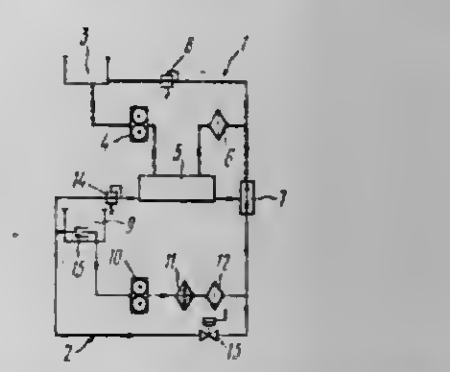

1. A fuel supply device for a diesel engine operating on a light fuel and a heavy fuel delivered to its suction pipe, and also using the light fuel for cooling fuel injectors and for warming fuel injection pumps, comprising:
a light fuel loop;
a heavy fuel loop;
a tank of said heavy fuel loop;
a fuel priming pump of said heavy fuel loop;
a system of stop valves alternately connecting said light fuel loop and said heavy fuel loop to said suction pipe, said light fuel loop being additionally communicated with said diesel engine for cooling said fuel injectors and warming said fuel injection pumps;
a logical element "OR" of said system of stop valves having a first input, a second input and an output, the output of said logical element "OR" being connected with said suction pipe of said diesel engine;
a pressure controller for creating a reference pressure in said system of stop valves connected to the first input of said logical element "OR";
a flow switch valve in said system of stop valves, having its input connected to the second input of said logical element "OR" and with said fuel priming pump, the output of said flow switch valve being connected with said tank.

4,300,518
DIGITAL DWELL CIRCUIT
Adelore F. Petrie, Arlington Heights, Ill., assignor to Motorola, Inc., Schaumburg, Ill.
Filed Jun. 15, 1979, Ser. No. 49,014
Int. Cl.³ F02D *5/04*
U.S. Cl. 123—609 9 Claims

1. An improved digital dwell circuit for an ignition control system of an internal combustion engine, said improved dwell circuit comprising:
means for periodically developing a running count by counting pulses at a predetermined, engine speed-independent rate between first and second predetermined time occurrences directly corresponding to periodic signal pulse transitions related to predetermined angular positions of rotation of an engine crankshaft, and producing at said second time occurrences maximum running counts related to the rotational speed of the engine crankshaft; and
means for periodically receiving said maximum counts and effectively subtracting a predetermined number of counts therefrom to arrive at a resultant subtracted count, said subtraction being completed at substantially said second time occurrences; wherein the improvement comprises:

means counting down from said resultant subtracted count at a speed-independent rate and

means for periodically indicating when the down count from said resultant subtracted count equals a predetermined

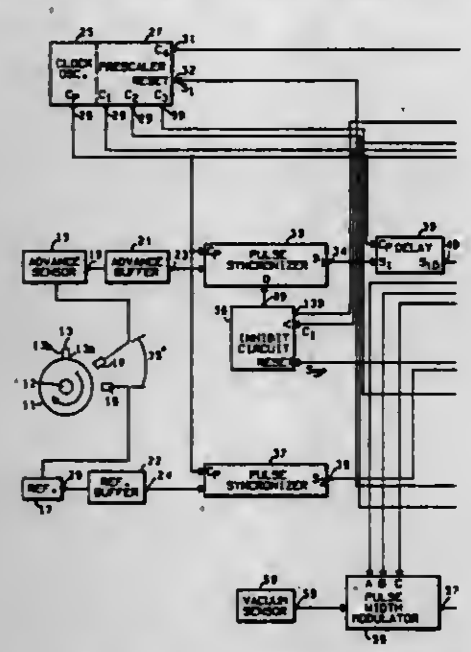

threshold count and for initiating ignition dwell in response thereto subsequent to said second time occurrence and at a predetermined time prior to the next of said periodic signal pulse transitions.

4,300,519

IGNITION COIL DEVICE ATTACHING CONSTRUCTION

Kiyoshi Isogai, Toyota, and Kazuyoshi Sugaya, Kariya, both of Japan, assignors to Toyota Jidosha Kogyo Kabushiki Kaisha, Aichi, Japan

Filed May 27, 1980, Ser. No. 153,524

Claims priority, application Japan, Jun. 29, 1979, 54-90335[U]

Int. Cl.³ F02B *77/00*

U.S. Cl. 123—647 **9 Claims**

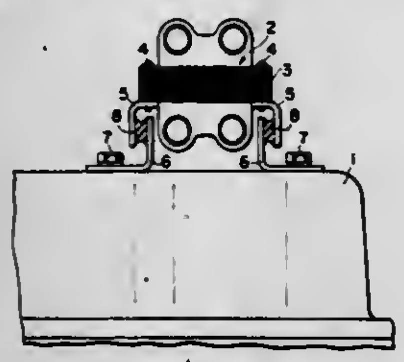

1. An attaching construction for attaching an ignition coil device to the external surface of an internal combustion engine, comprising:

a first L-shaped coil side bracket having one end connected to the ignition coil device,

a second L-shaped engine side bracket having one end connected to said external surface of the engine,

a third L-shaped coil side bracket having one end connected to said ignition coil device, and

a fourth L-shaped coil side bracket having one end connected to said external surface of said engine,

wherein the other ends of said first and third coil side brackets are located adjacent to and confront the other ends of said second and fourth engine side brackets, respectively, thereby defining first and second gaps therebetween, and

first and second layers formed of a resilient elastomer with a low heat conductivity and a high temperature resistance for bridging said first and second gaps, respectively.

4,300,520

TARGET THROWING DEVICE

Jean Michel Laporte, Villa des Marches 201 route de Lamer, and Jean Claude Laporte, 7, rue des Bachettes, both of 06410 Biot, France

Filed Jul. 17, 1979, Ser. No. 58,351

Claims priority, application France, Jul. 18, 1978, 78 22190

Int. Cl.³ F41B *3/04*

U.S. Cl. 124—9 **8 Claims**

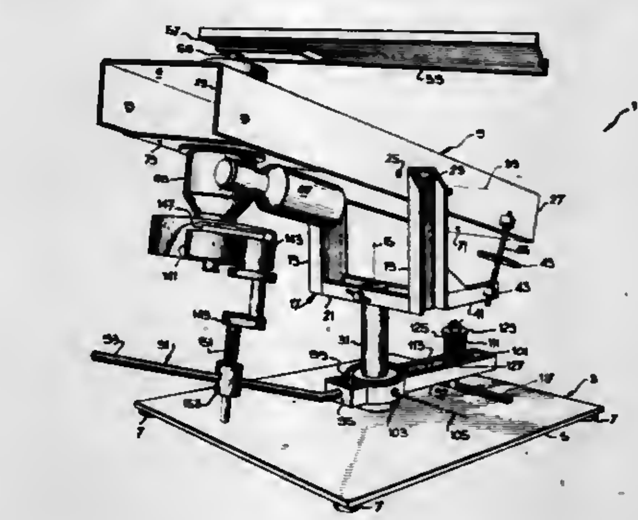

1. A target throwing device comprising a base; a support; means for mounting the support on the base for swinging movement about an upright axis; a target throwing arm rotatably mounted on a support; guide means connected to the support and mounted on the base and extending in the general direction the targets are to be thrown and adapted to transmit oscillatory motion to the support; drive means for operating the target throwing arm to throw targets; and eccentric drive means connecting the guide means and the support for eccentrically swinging the support about the upright axis said eccentric drive means includes a first eccentric means connection between the support and the guide means for swinging the support back and forth in long swings, and a second eccentric drive means connected within the first eccentric drive connection and operative in response to movement of the first eccentric drive means for superimposing an eccentric series of short back and forth swings on the support during each long swing said second eccentric drive means transmitting eccentric motion to the support through a member that is moveable with respect to the guide means.

4,300,521

COMPOUND BOW

Chris Schmitt, Northridge, Calif., assignor to Jennings Compound Bow, Inc., Valencia, Calif.

Filed Feb. 22, 1980, Ser. No. 123,810

Int. Cl.³ F41B *5/00*

U.S. Cl. 124—23 R **11 Claims**

1. In a compound bow having a center handle portion, upper and lower limbs having inner ends connected to the center portion and free outer ends, and upper and lower draw pulleys eccentrically mounted respectively on axles mounted on the free outer ends of the upper and lower limbs, the improvement including,

a first draw cable having one end positioned adjacent the lower draw pulley and extending across the bow and with the other end of the first draw cable extending tangentially from the outer surface of the upper pulley;

a second draw cable having one end positioned adjacent the upper draw pulley and extending across the bow and the other end of the second draw cable extending around the lower draw pulley and having a free end extending tangentially from the outer surface of the lower pulley;

a bowstring interconnecting the free ends of the first and second draw cables;

first coupling means coupling the one end of the first draw cable to the free outer end of the lower limb;

second coupling means coupling the one end of the second draw cable to the free outer end of the upper limb;

the first and second coupling means each formed as a yoke structure for dividing the load in the draw cables and for

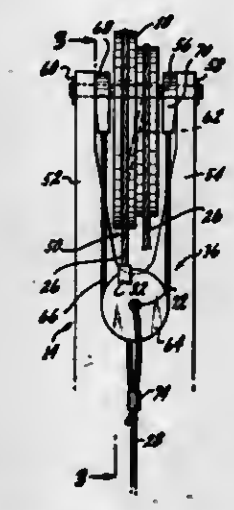

coupling the load to opposite sides of each draw pulley, and,

wherein each yoke structure is formed by an idler pulley and a short length of cable and with the short cable extending around the idler pulley and with the ends of the short cable coupled to the free outer end of the limb and with the one end of each draw cable coupled to the idler pulley.

4,300,522

COMPACT DRESSING TOOL

Robert L. Henry, Hilliard, and Frank R. Skinner, Worthington, both of Ohio, assignors to General Electric Company, Worthington, Ohio

Continuation of Ser. No. 937,218, Aug. 28, 1978, abandoned. This application May 16, 1980, Ser. No. 150,379

Int. Cl.³ B24B *53/00*

U.S. Cl. 125—11 R **5 Claims**

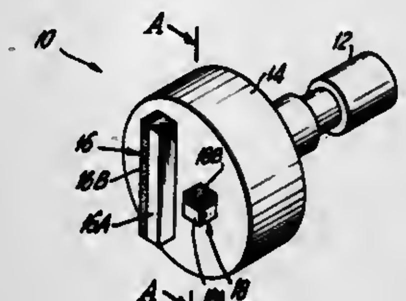

1. An improved multi-point dressing tool for grinding wheels comprising a shank portion and a nib and having at least two composite compacts positioned on the nib wherein a composite compact comprises:

(a) a mass comprising at least 70 volume percent of an abrasive selected from the group consisting of diamond and cubic boron nitride particles which are bonded together and wherein there is crystal-to-crystal bonding in the case of diamond, and which mass is bonded to;

(b) a substrate mass of cemented carbide selected from the group consisting of tungsten, titanium, and tantalum carbides; wherein the improvement comprises a dressing tool means having a first composite compact crushing means with a leading abrasive edge and a second composite compact shearing means with a leading abrasive edge, said first composite compact being positioned on said nib such that its leading edge contacts the rotating surface of the grinding wheel tangentially to crush the wheel and said second composite compact being positioned such that its leading edge is normal to the grinding wheel surface to shear the wheel.

4,300,523

BARBECUE OVEN

Berthal B. Robertson, 1413 Shawnee Dr., Apt. A, and Michael L. Robertson, Rte. 6, Box 238, both of Marion, Ill. 62959

Filed Apr. 30, 1979, Ser. No. 34,251

Int. Cl.³ F24C *15/16*

U.S. Cl. 126—21 A **23 Claims**

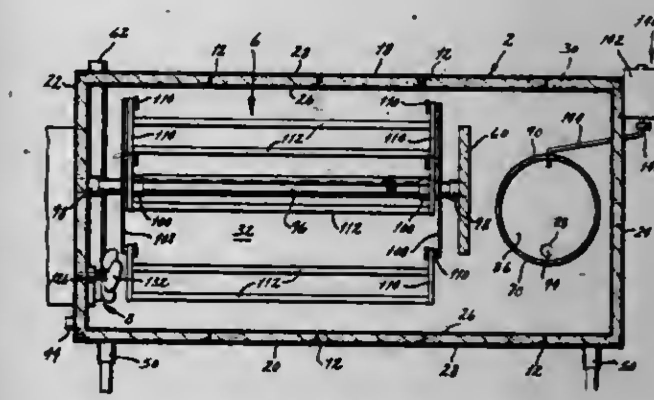

1. An oven that is particularly suited for preparing barbecued foods, said oven comprising: a housing including a plurality of walls, among them end walls, which enclose an oven chamber and a partition wall within the oven chamber, at least one of the walls having an opening through which food can be introduced into the oven chamber; a tubular firebox having spaced apart ends with one of the ends being closed by an end wall, the firebox having a tube extended from it with the tube having a cross-sectional area substantially smaller than the cross-sectional area of the firebox itself, the firebox being mounted on at least one of the walls and extended into the oven chamber from that wall so that it is for the most part spaced from the oven walls and exposed on its top, bottom, and sides to the oven chamber but has its tube extended to one of the oven walls, the firebox having apertures that open into the oven chamber to permit products of combustion to escape into the oven chamber; a door closing the other end of the firebox and being accessible from the exterior of the housing so that wood may be introduced into the firebox; a gas burner mounted on the housing and being directed into the tube on the firebox for producing a flame that is capable of entering the interior of the firebox for igniting wood in the firebox and for supplying supplemental heat to the oven chamber; means for supporting food in the oven chamber, said means being supported on one of the housing end walls and also on the partition wall; and means for circulating air and products of combustion from the firebox through the oven chamber such that the air and products of combustion pass by the firebox where they are heated.

4,300,524

SAFETY DEVICE FOR CHILD-PROOF GAS STOVE

Stephanie Elsasser, 31 Kinghorn St., Staten Island, N.Y. 10312

Filed Jan. 15, 1979, Ser. No. 3,555

Int. Cl.³ F24C *3/00;* **A21B** *1/00*

U.S. Cl. 126—39 R **1 Claim**

1. In a child-proof safety device for a kitchen gas stove including a plurality of stove top burners, at least one oven, control means for each burner, a storage drawer and a locking mechanism having hooks and levers connected thereto to lock or unlock a door of said oven and said storage drawer, the improvement comprising a main gas valve located in a main gas supply line in the gas stove for supplying gas to all the burners having the respective control means, said main gas valve having a shaft, a valve body attached to said shaft and a knob for turning said shaft to shut off the main gas valve, said knob being provided on a top-rear section of the stove for

preventing a child from handling the knob, said levers of said locking mechanism being connected to said shaft to be moved

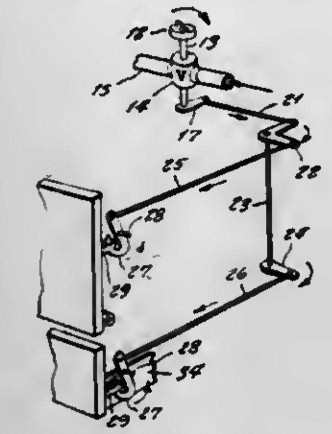

together with said valve body by the knob, whereby when said main gas valve is turned off, the oven and the storage drawer cannot be opened and all the burners cannot be used.

4,300,525
SAFE KNOB
Jesus Delgado, and George Spector, both c/o George Spector, 3615 Woolworth Bldg., 233 Broadway, New York, N.Y. 10007
Filed Jan. 15, 1979, Ser. No. 48,750
Int. Cl.³ F24C *3/12*
U.S. Cl. 126—42 **4 Claims**

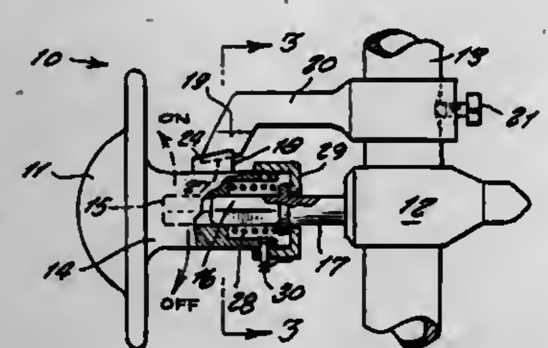

1. A safe knob assembly for a kitchen gas stove burner, comprising in combination, a knob integral with shank having a square central opening slidably fitted on a square end of a stem of a gas valve along a gas line of a stove, a cam-faced spur on a side of said shank, and a stationary stop mounted separately adjacent said spur in combination with means for axially moving said shank in response to rotation in one direction of said shank and wherein rotation in opposite direction is restricted by engagement of said spur and stop.

4,300,526
WOODBURNING STOVE
John McKay, and Billy C. Hawkins, both of 41 Hampton Arms, Greenville, S.C. 29601
Filed Jan. 29, 1980, Ser. No. 116,571
Int. Cl.³ F24B *3/00*; F24C *1/14, 15/28*; F24B *7/00*
U.S. Cl. 126—67 **2 Claims**

1. A woodburning stove having an inner housing and an outer housing spaced therefrom providing air passages therebetween, a blower circulating air through said air passages for absorbing heat from the walls of said housings and exhausting the heated air into the room where said stove is located, a chimney opening provided in the top of said inner and outer housings adjacent a rear portion of said stove, a substantially horizontally extending plate spaced vertically below the top wall of said inner housing, a rear edge of said plate being joined to said top wall of said inner housing and a forward edge of said plate terminating short of the front of said stove producing an afterburner space for gases flowing from a fire built in said stove to said chimney opening, the improvement comprising:

a duct providing communication between said air passage and said after burner space; and

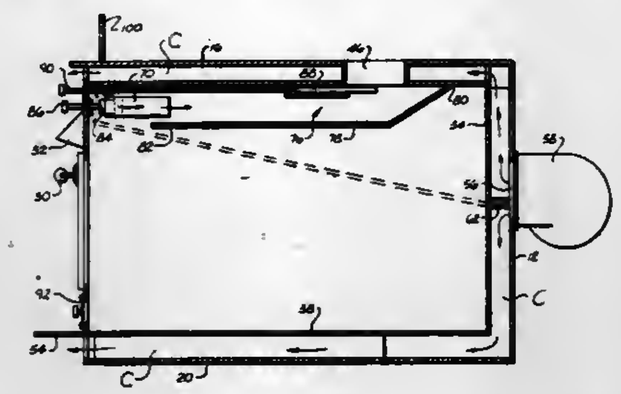

valve means for controlling the flow of preheated air from said passage through said duct to said afterburner space for causing combustion of said gases flowing through said afterburner space.

4,300,527
BI-LOOP HEAT RECOVERY SYSTEM
Albert Montague, 1689 Blue Jay La., Cherry Hill, N.J. 08003
Continuation-in-part of Ser. No. 838,749, Oct. 3, 1977, abandoned. This application Jan. 29, 1979, Ser. No. 7,412
Int. Cl.³ F24H *3/00*; F23J *11/00*; F24B *7/00*
U.S. Cl. 126—112 **6 Claims**

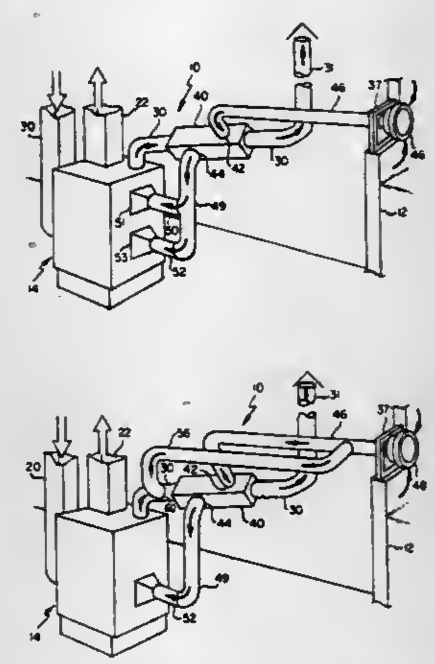

1. In a furnace located in an enclosure, the furnace having a burner, at least one combustion air inlet formed in the furnace for permitting air to flow from the enclosure into the furnace for combustion, a draft diverter port formed in the furnace, an exhaust duct, and a stack coupled to the exhaust duct for exhausting the products of combustion from the enclosure, an improved system comprising:
(a) heat exchange means which can be quickly and easily coupled to the exhaust duct to provide a first zone to carry products of combustion and a second zone in heat flow communication with the first zone to carry a stream of air;
(b) first conduit means which can be quickly and easily coupled to provide gas flow communication between a point outside the enclosure and the second zone of said heat exchange means; and
(c) second conduit means which can be quickly and easily coupled to provide continuous and uninterrupted gas flow communication between the second zone of said heat exchange means and the at least one inlet formed in the furnace whereby air for combustion in the furnace is supplied from a point outside the enclosure, and the air for combustion is preheated in said heat exchange means; wherein said second conduit means includes a first conduit coupled in flow communication between the second zone of said heat exchange means and said draft diverter port and further includes a second conduit coupled in flow communication between the second zone of said heat exchange means and said combustion air inlet.

4,300,528
FIREPLACE DOOR SEAL
Charles O. Slemmons, 670 Ardleigh Dr., Akron, Ohio 44303
Filed Oct. 19, 1979, Ser. No. 86,474
Int. Cl.³ F24C *15/10*
U.S. Cl. 126—140 **6 Claims**

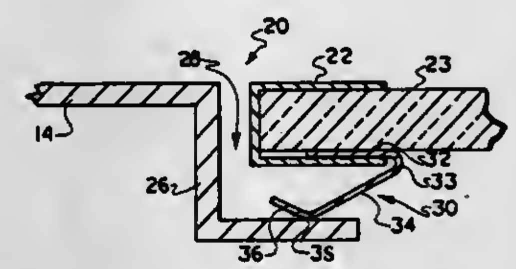

1. An improvement to the enclosure of fireplace apertures which use a metallic enclosure frame having an orthogonal recess within which pivotal metal framed glass doors reside, the pivotable nature of the doors having a gap between adjacent framed glass doors, said improvement comprising:
a one piece metallic sealing strip engaging the pivotable framed glass doors with the metallic enclosure frame or with adjacent framed glass doors, said strip being bent along its length into three portions including an outside retaining portion inserted and held in cooperative frictional retention between the glass and the metal frame, a middle spring portion extendable between the pivotable glass doors and the metallic enclosure frame or framed glass doors exerting a positive spring tension, and an outside contact portion for sealing said strip across the orthogonal recess or the gap, whereby the pivotable glass doors are sealed within the metallic enclosure frame and between themselves to prevent leakage of air from the interior of a home into the combustion chamber of the fireplace and thence to the chimney.

4,300,529
CLEANABLE WOODBURNING STOVE GRATE
Gordon D. Kelley, 735 Wade Hampton Blvd., Greenville, S.C. 29609
Filed Apr. 18, 1980, Ser. No. 141,337
Int. Cl.³ F23H *13/00*
U.S. Cl. 126—152 B **2 Claims**

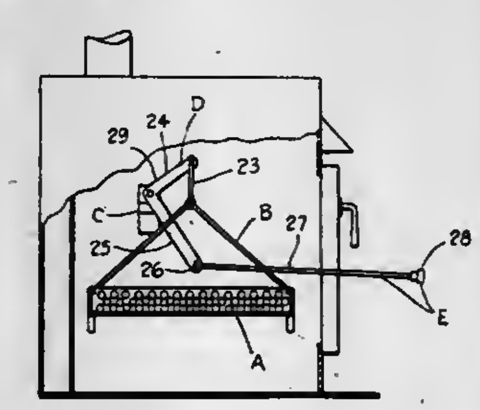

1. For use in a woodburning stove and the like having an enclosure housing, a combustion chamber within said housing, an opening in said housing permitting direct access to said combustion chamber, an improved grate comprising:
a fuel burning grate having openings therein to allow ashes to fall therethrough within said combustion chamber;
a suspension device for said grate carried on each end thereof;
a support above said grate having pivotal connection with said suspension device;
linkage means pivotally carried in said support; and
an operator extending from said linkage means on one end within said combustion chamber outwardly externally of said combustion chamber for manual manipulation externally of said combustion chamber pivoting said linkage means within said combustion chamber;
whereby said grate may be raised to permit unobstructed cleaning of the ashes therebeneath through said opening.

4,300,530
SOLAR HEAT CONTROL APPARATUS FOR A BODY OF WATER
Jack E. Tetirick, 105 Indian Springs Dr., Columbus, Ohio 43214
Filed Mar. 24, 1980, Ser. No. 132,780
Int. Cl.³ F24J *3/02*
U.S. Cl. 126—415 **18 Claims**

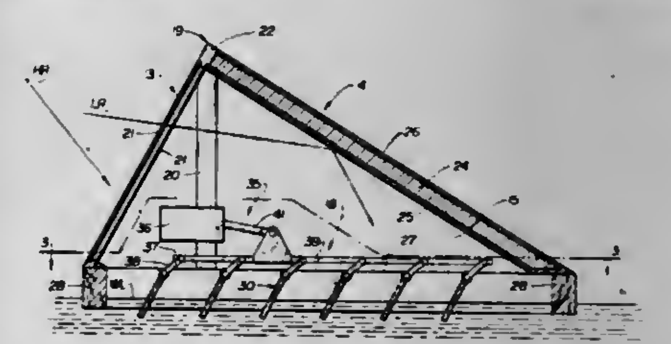

1. A solar heat control apparatus for a body of water comprising
a structural frame adapted to be supported at an upper surface region of a water body, and
solar radiation conversion and heat transfer control means carried by said frame, said control means including at least one heat conductive plate having first and second surfaces on opposite sides thereof and mounted on said frame for selective movement of said plate relative to the upper surface of a water body, said plate having a first marginal edge immersible in the water body and a second marginal edge portion projecting above the water body to thereby affect control of solar radiation effectively incident to the first surface of said plate and converted to heat energy and to control transfer of heat energy relative to the water body in accordance with the relative position of said plate to the upper surface of the water body.

4,300,531
SUNLIGHT COLLECTOR
Karlheinz Raetz, Gassnerstr. 12, 3300 Braunschweig, Fed. Rep. of Germany
Filed Aug. 30, 1978, Ser. No. 937,983
Claims priority, application Fed. Rep. of Germany, Sep. 3, 1977, 2739797
Int. Cl.³ F24J *3/02*
U.S. Cl. 126—417 **13 Claims**

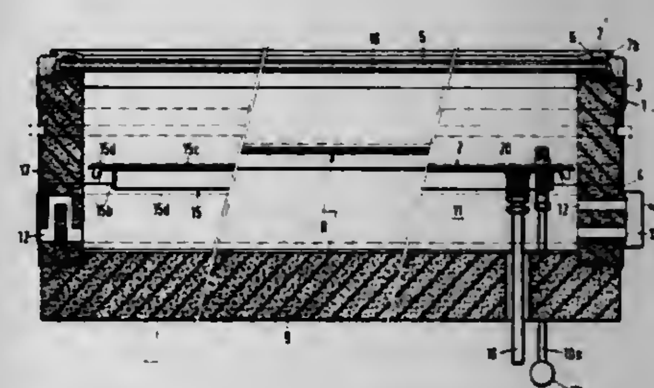

1. A solar collector comprising a main frame, and a collector

element, said main frame having side walls and top covered by highly transparent glass, and a bottom support for said collector element, said bottom support being curved convexedly upward and having liquid channel means for removal of heat from said bottom support, said collector element comprising a foil spanning said bottom support, having a coating of a high degree of darkness on its upper surface, and means for removably placing said foil in tensioned contact with the convexedly curved surface of said bottom support.

4,300,532

METHOD AND APPARATUS FOR COLLECTING SOLAR ENERGY

Thomas O. Olsen, Wichita, Kans., assignor to Otto Fabric, Inc., Sedgwick County, Kans.

Filed Jan. 18, 1979, Ser. No. 49,413

Int. Cl.³ F24J 3/02

U.S. Cl. 126—417 8 Claims

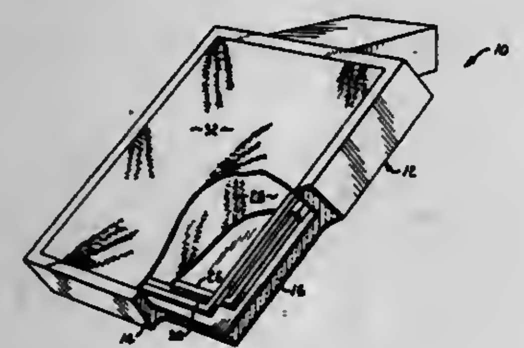

1. A solar collector comprising:
a framework; and
a collector panel held in a planar position by said framework and comprising a glass cloth coated with a light absorbing room temperature vulcanizing silicone rubber.
6. A method of collecting solar energy comprising:
providing a glass cloth coated with a light absorbing room temperature vulcanizing silicone rubber;
placing said cloth in a location to receive direct sunlight; and placing a heat exchange medium in contact with said cloth.

4,300,533

DESIGN OF HYDRAULIC CIRCUITS FOR THE AUTOMATIC OPERATION OF HELIOSTATS

Leonard R. Sacco, 762 Tuolumne Ave., Thousand Oaks, Calif. 91360

Filed Aug. 6, 1979, Ser. No. 63,731

Int. Cl.³ F24J 3/02; G01J 1/20; G03B 21/00

U.S. Cl. 126—425 12 Claims

1. An automatic hydraulic/thermal system for powering a tracking mechanism of a heliostat comprising at least a first means for sensing solar radiation and for selectively creating a first signal fluid pressure in response to said solar radiation, said first sensing means coupled to a first hydraulic logic circuit, said first means for sensing disposed adjacent to a first opaque shield such that said opaque shield is disposed between said sun and said first means for sensing, said first opaque shield for casting a shadow, said shadow for alternately covering portions of said first sensing means as said sun moves across the sky to indicate the relative position of said sun and for creating a specific first fluid signal pressure in response thereto, said first fluid signal pressure for energizing said first hydraulic logic circuit and for activating said first mechanical means for aligning said heliostat so as to receive direct radiation from said sun, said first sensing means comprising at least one pair or phials, each disposed within an evacuated transparent envelope and disposed from a base reference line and angle of $\alpha°$ and (180°-$\alpha°$) respectively where $\alpha°$ is between (0° and 90°,) said at least one pair of phials coupled one to one end and the other to the other end of a diverting valve in said first hydraulic logic circuit, as said shadow from said first opaque shield covers one of said phials of at least said one pair of phials a pressure differential is created between said at least one pair of phials, said pressure differential being identified by said diverting valve for transmitting a signal to said first hydraulic logic

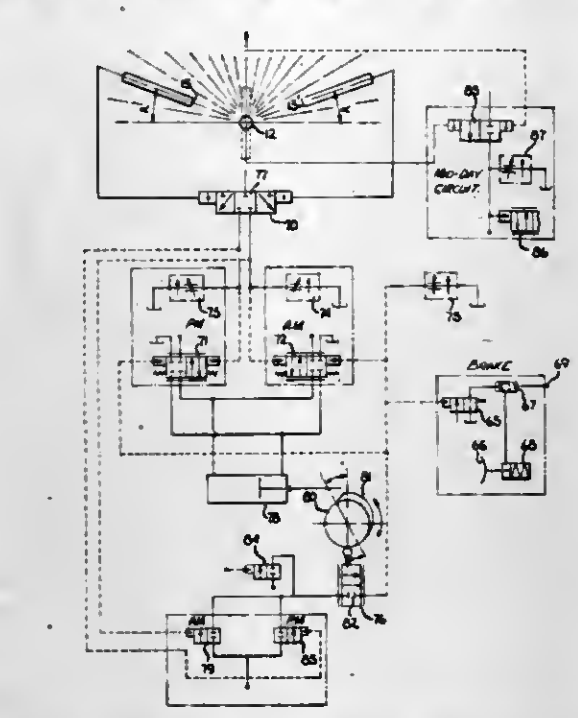

circuit for reacting to said pressure signal and for activating said first mechanical means to position said heliostat into proper alignment with said sun so as to receive direct solar radiation.

4,300,534

SOLAR COLLECTOR WITH MODIFIED PLUMBING AND ARRAY THEREOF

John C. Bowen, Huntingdon Valley, Pa., assignor to Ametek, Inc., Paoli, Pa.

Filed Dec. 3, 1979, Ser. No. 99,490

Int. Cl.³ F24J 3/02

U.S. Cl. 126—432 5 Claims

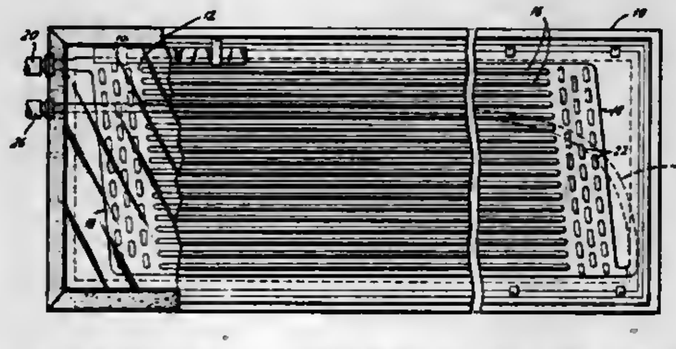

1. In a solar collector comprising an enclosure having a transparent front face, a solar energy collector plate spaced from and parallel to said front face, heat transfer fluid passageways in thermal connection with said plate, and heat transfer fluid inlet means and outlet means disposed to communicate with said passageways and to be connected with external heat transfer fluid plumbing through said enclosure, said external plumbing in turn being connected with a means for circulating heat transfer fluid to and from said collector at a predetermined rate, the improvement consisting of:
said collector being adapted to be mounted in a sloped position with said inlet means and said outlet means both located on a lower edge of said collector enclosure, said collector including a downflow conduit for receiving heat exchange fluid from said passageways and for conveying said fluid from said passageways to said outlet, said downflow conduit sized, relative to the fluid throughout rate of heat exchange fluid to and from said collector, to produce sufficiently high heat transfer fluid linear velocity in said return conduit to prevent air bubble or vapor blockage of said return conduit to prevent air bubble or vapor blockage of said passageways in said conduit within said enclosure by establishing a downflow velocity in said conduit in excess of the terminal velocity of a bubble in heat exchange fluid in said conduit.

4,300,535

SOLAR HOT WATER COLLECTOR

Ronald G. Munroe, Georgetown, S.C., assignor to Skyronics Aviation Inc., Georgetown, S.C.

Filed Dec. 10, 1979, Ser. No. 101,754

Int. Cl.³ F24J 3/02

U.S. Cl. 126—432 19 Claims

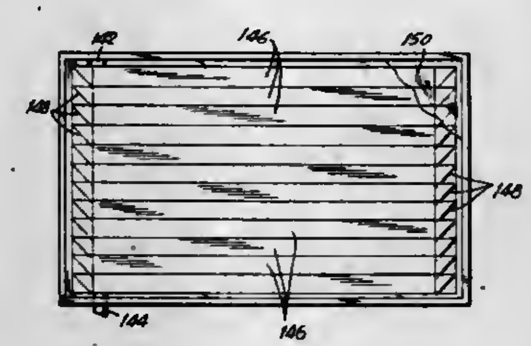

1. A solar hot water collector comprising:
(A) a plurality of substantially rectilinear channels, each channel
(i) being formed by an elongated strip, said strip being folded longitudinally to form the channel,
(ii) being composed of a metal having high heat conductivity and selected from the group consisting of aluminum, magnesium, an aluminum-magnesium alloy, steel, copper, brass, and bronze,
(iii) having a one end and another end,
(iv) being arranged in approximately parallel relationship on a sloped roof of an enclosure and individually extending transversely to the pitch of the roof and transversely across the roof in a substantially horizontal direction, and
(v) the ends of the channels being approximately in mutual registration;
(B) liquid flowable through the channels from said one end of each channel to said other end of each channel under the influence of gravity;
(C) liquid transfer means at said other end of each channel except the lowermost for transferring the liquid from such channel to the next lower channel solely by gravity;
(D) means for introducing the liquid into the highest channel;
(E) the liquid being heated by the sun as it flows along successive channels;
(F) the channels being both solar heat absorbers and solar heat transmitters, transmitting said heat to the liquid flowing therethrough; and
(G) means for removing heated liquid from the lowest channel.
10. A solar hot water collector which comprises an elongated metal strip, said metal strip being composed of a metal having high heat conductivity selected from the group consisting of aluminum, magnesium, an aluminum-magnesium alloy, steel, copper, brass and bronze, said metal strip having a plurality of spaced apart rectilinear slits or slots therein, said slits or slots being longitudinally aligned in tandem along a straight line, a plurality of metal mounting brackets, means mounting said brackets in juxtaposed registration transverse to the longitudinal axis of said metal strip, one end of each mounting bracket extending through one of said slits or slots, means for attaching the other end of each of said brackets to the roof of an enclosure, so that said metal strip extends substantially horizontally across said roof, means for bending each of said brackets into a substantially U-shape, so that said metal strip becomes a U-shaped trough capable of holding a liquid, and means adjacent said one end of each of said brackets for securing said one end of each of said brackets in spaced relation to the other end of the bracket.

4,300,536

AUXILIARY HOT WATER BOILER WITH SOLAR HEATER AND HEAT EXCHANGE SYSTEM

John N. Taschuk, North Kingstown, R.I., assignor to James P. Flynn, R.I., a part interest

Filed Jan. 18, 1980, Ser. No. 113,293

Int. Cl.³ F24J 3/02

U.S. Cl. 126—435 7 Claims

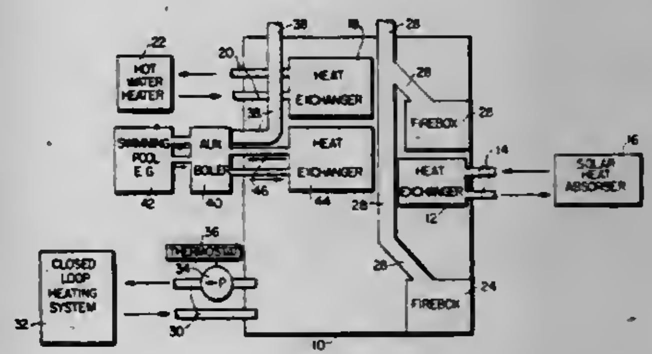

1. For use as the principal component of an auxiliary hot water boiler and heat exchange system, a prepackaged subassembly comprising: an upright, cylindrical tank having a top and a bottom; at least on firebox fabricated integrally within said tank; a first flue from said firebox, directed upwardly through said top of said tank; a first heat exchanger within said tank; first fittings on said first heat exchanger through said tank which are adapted to be interconnected with a solar heat absorber; a second heat exchanger; second fittings on said second heat exchanger through said tank which are adapted to be interconnected with a conventional, domestic hot water heater; a second flue comprising an inlet through a side wall of said tank and an interior, vertically oriented stack emerging through said tank top, the inlet of said second flue being adapted to be connected to the flue of an additional boiler, a third heat exchanger within said tank; and third fittings on said third exchanger, through said tank which are adapted to be interconnected with the additional boiler.

4. An auxiliary hot water boiler and heat exchange system for use with a conventional, domestic closed loop hot water heating system and a conventional, domestic hot water heater comprising: a storage tank having a supply of water therein; at least one firebox within said tank; a first flue from said firebox located within said tank and emerging through the top thereof, heat generated by said firebox and first flue providing a supplemental heat source for the water in said tank; a first heat exchanger with said tank; solar heat absorber means; first closed circuit conduit means interconnecting said solar heat absorber means and said first heat exchanger to thereby provide a primary source of heat for the water in said tank; a second heat exchanger; second, closed circuit conduit means interconnecting the hot water heater and said second heat exchanger to thereby provide preheated water for the water heater; an additional hot water boiler located adjacent said tank; a second flue from said additional boiler directed through a side wall of said tank and emerging through the top thereof to thereby provide an additional source of heat for the water in said tank; and third closed circuit conduit means directly interconnecting the water in said tank and the water of the conventional, closed loop hot water heating system.

4,300,537
SOLAR PANEL MOUNT
Thomas A. Davis, 1657 Gotham St., Chula Vista, Calif. 92010
Filed Sep. 19, 1980, Ser. No. 188,705
Int. Cl.³ F24J *3/02*
U.S. Cl. 126—437 **5 Claims**

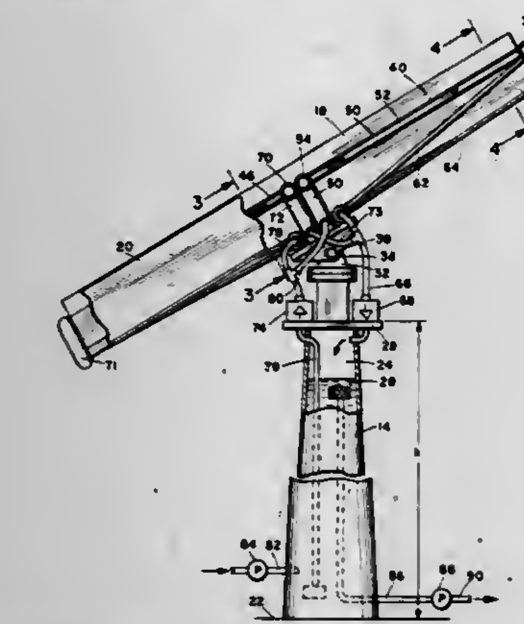

1. A solar collector system, said system comprising in combination:

a vertically extending supporting column formed by a tubular member defining a liquid storage reservoir having an upper end, and a lower end for anchoring to a support surface and a height of at least 8 feet,

a mounting bracket on the upper end of said column for mounting a solar collector for at least limited adjustment in orientation toward the sun;

said column having a length in relation to a solar collector mounted thereon for positioning the lowermost portion of the solar collector at a predetermined minimum height to provide unobstructed utilization of the immediate area surrounding the column;

a flat plate liquid circulating collector mounted on said column, and

circulating means for circulating a liquid from said reservoir through said collector.

4,300,538
SOLAR ENERGY RECEIVERS
Miroslav Uroshevich, Cincinnati, Ohio, assignor to Alpha Solarco Inc., Cincinnati, Ohio
Filed Jun. 25, 1979, Ser. No. 52,089
Int. Cl.³ F24J *3/02*
U.S. Cl. 126—438 **3 Claims**

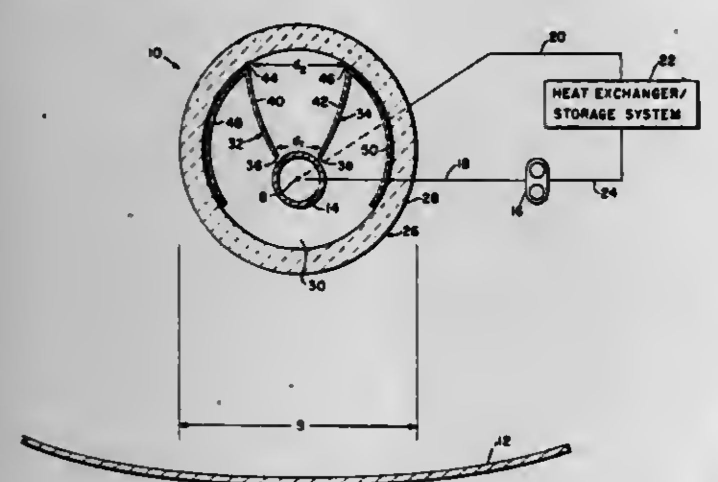

1. In a solar energy collector having an elongated reflector element receiving the beam component of solar radiation and reflecting and focusing it substantially along a focal axis positioned between the reflector and the source of solar radiation, the improvement comprising:

an elongated tubular receiver of heat conductive material positioned generally along said focal axis for absorbing solar radiation, said tubular receiver providing a passageway for heat transfer fluid that is heated as it flows therethrough and an elongated shell having substantially uniform wall thickness spaced from and surrounding said tubular receiver, said shell being transparent to solar radiation;

a pair of opposed elongated reflective elements having first edges adjacent said tubular receiver and second edges adjacent the interior wall of said shell, said reflective elements forming substantially concave reflective opposed surfaces within said shell to form therebetween a trap for solar radiation, which radiation is reflected between said surfaces and concentrated on said receiver, the distance between the second edges of said elements being greater than the distance between the first edges, the concave reflective surfaces each being formed in the shape of a parabola having as its focus the first edge of the other reflective surface;

each of said reflective elements having a curved integral section connected to the second edge thereof and conforming to said transparent shell, said curved sections being wide enough to position said reflective elements within said transparent shell and narrow enough to expose the tubular receiver directly to all the solar radiation reflected by said elongated reflector;

whereby the radiation that would be lost because of the shadow cast by said shell and tubular receiver is concentrated on and is absorbed by the portion of the receiver facing away from said reflector element.

4,300,539
SOLAR COLLECTOR
Michael J. Dobson, Tewkesbury, England, assignor to Ecosol Materials, Inc., New York, N.Y.
Division of Ser. No. 945,077, Sep. 22, 1978, Pat. No. 4,213,929, and a continuation-in-part of Ser. No. 692,507, Jun. 3, 1976, Pat. No. 4,257,481. This application Nov. 19, 1979, Ser. No. 95,156
Int. Cl.³ F24J *3/02;* F28F *9/02*
U.S. Cl. 126—448 **2 Claims**

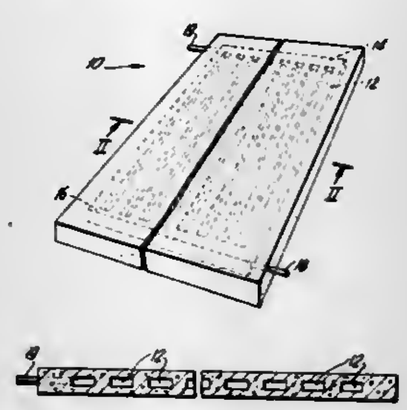

1. A solar collector panel comprising a one-piece glass fiber reinforced concrete panel having internal passageways in the form of a plurality of parallel ducts which terminate at one end in an inlet manifold chamber and at the other end in an outlet manifold chamber, the internal passageways being sealed with a hardened polymer coating, said solar collector panel including means to assist in drainage of the heat transfer medium, wherein the fiber reinforced concrete is made from a mix comprising cement and sand, and in addition, includes at least 3% by weight alkalai resistant glass fiber.

4,300,540
REFRIGERANT SOLAR ENERGY SYSTEM AND METHOD
Kenneth P. Gray, E. Syracuse, N.Y., assignor to Carrier Corporation, Syracuse, N.Y.
Filed Jul. 2, 1979, Ser. No. 54,392
Int. Cl.³ F24J *3/02;* F28D *15/00*
U.S. Cl. 126—452 **14 Claims**

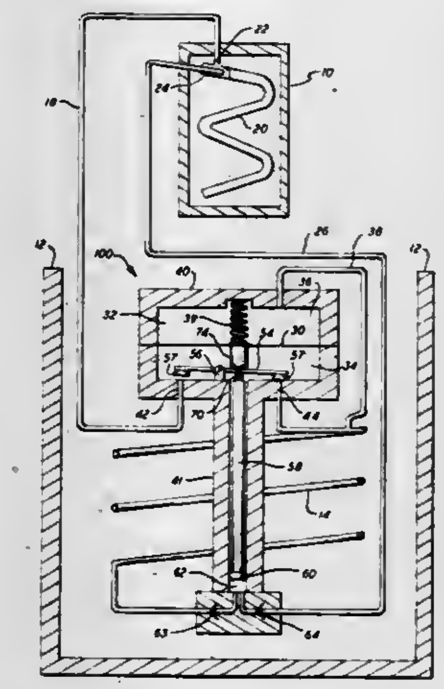

13. A method of utilizing solar energy to heat a fluid at a distant location and to accomplish mechanical work which comprises the steps of;

vaporizing a refrigerant in heat exchange relation with the solar energy collector;

conducting the vaporized refrigerant to the fluid to be heated at a distant location;

condensing the refrigerant in heat exchange relation with the fluid to be heated rejecting heat to said fluid;

conducting liquid refrigerant back to the step of vaporizing to complete a refrigerant circuit;

pumping the refrigerant mechanically to assure flow through the circuit;

converting a portion of the energy contained in the refrigerant to mechanical work with a refrigerant motor; and

performing the steps of pumping and converting in heat exchange relation with the fluid to be heated.

4,300,541
SPECULUM LENS STRUCTURE
Kermit Burgin, R.R. 1, Box 334, Whitestown, Ind. 46075
Continuation of Ser. No. 10,751, Feb. 9, 1979, abandoned. This application Aug. 22, 1980, Ser. No. 180,352
Int. Cl.³ A61B *1/06*
U.S. Cl. 128—18 **21 Claims**

1. In combination, a pair of contacting members and an operating handle for movably mounting the contacting members relative to each other, each contacting member including means cooperating with the operating handle to mount the contacting member on the operating handle, means projecting away from the mounting means to contact a meatus, means for mounting a light source remote from the meatus, means for transmitting light along the contacting member away from the mounting means, and a lens formed on the contacting member for directing the transmitted light in a desired manner into the meatus, the lens being formed at the end of the transmitting means remote from the source, and including a surface for directing light into the meatus, the surface causing diffusion or

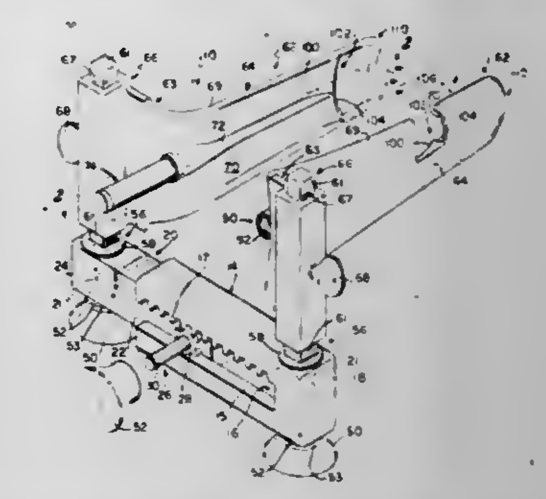

spreading of the light as it passes through the surface into the meatus.

4,300,542
COMPRESSION DEVICE FOR HUMAN LIMBS
Howard C. Baron, 935 Park Ave., New York, N.Y. 10028
Filed Dec. 17, 1979, Ser. No. 104,187
Int. Cl.³ A61F *5/04*
U.S. Cl. 128—87 R **9 Claims**

1. A compression device for human limbs comprising an open ended tubular sleeve member having an interior space sized for receiving a human limb, an expandible envelope disposed within said tubular sleeve member at one side of said interior space and opposite to a wall portion of said sleeve member, with said human limb being receivable in said interior space between said expandible envelope and said wall portion, said expandible envelope having flexible walls, being completely sealed, and having a normal collapsed condition in which said expandible envelope occupies a minor portion of said interior portion of said interior space of said sleeve member, and means including a frangible member within said expandible envelope for rapidly generating a supply of substantially only gas therein, said frangible member being accessible from the exterior of said sleeve member, through said flexible walls of said expandible envelope, whereby said frangible member may be manually ruptured to rapidly generate gas within said expandible envelope, thereby causing said expandible envelope to expand rapidly without further manipulation thereof and press a limb inserted into said interior space against said wall portion of said sleeve member.

4,300,543
PROTECTIVE CAST DEVICE
Jhoon G. Rhee, 2000 L St., NW., Washington, D.C. 20036
Continuation-in-part of Ser. No. 905,470, May 12, 1978, and a continuation-in-part of Ser. No. 941,946, Sep. 13, 1978, and a continuation-in-part of Ser. No. 26,519, Apr. 3, 1979. This application Sep. 27, 1979, Ser. No. 79,418
Int. Cl.³ A61F *5/04*
U.S. Cl. 128—89 R **7 Claims**

1. A protective cast device adaptably to be worn around a part of a person's body, said device having a sheet-like planar contoured shape adapted to conform generally, substantially in

the form of a cylinder, to the shape of the body part when said device is worn and secured around said body part, said device comprising a lightweight, thin, relatively stiff non-memory plastic foam material member which tends to resist bending, which tends to retain its bent shape after being bent and which,

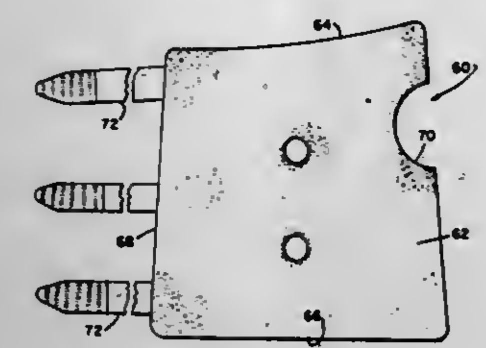

when curved in one direction, resists curving in any other direction and fastening means connected to the plastic foam member for maintaining the member curved in one direction around a body part whereby the member resists bending in any other direction.

4,300,544
DISPOSABLE FEMALE CONTRACEPTIVE
Harry W. Rudel, Mexico, Mexico, assignor to Dia-Sert Corp., White Plains, N.Y.
Continuation-in-part of Ser. No. 939,332, Sep. 5, 1978, abandoned, which is a continuation-in-part of Ser. No. 852,824, Nov. 18, 1977, abandoned. This application May 14, 1979, Ser. No. 38,725
Int. Cl.³ A61F *5/46*
U.S. Cl. 128—127 **92 Claims**

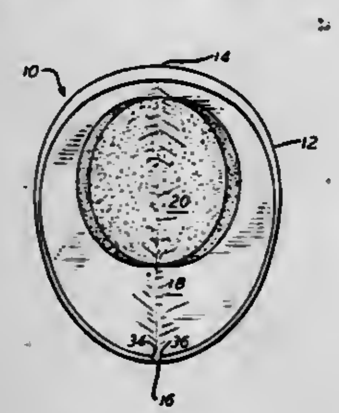

1. A barrier contraceptive of the type intended to be inserted within a vaginal vault, said contraceptive comprising:
(a) a first member means having opposed anterior and posterior portions for releasably and resiliently engaging the respective anterior and posterior portions of the vaginal vault; and
(b) a second member means coupled to said first member substantially at said posterior portion, such that, upon insertion of said contraceptive into the vaginal vault, with said second member disposed beteen said first member and the cervix, and said first member posterior and anterior portions engaging, respectively, the posterior and anterior portions of the vault; said second member being positionable to thereby close the cervical openings and be substantially removed from contact with the vaginal vault such that said first member buffers said second member from the effects of the forces of the vaginal vault to thereby substantially maintain said second member in position.

4,300,545
METHOD AND NOZZLE FOR NASAL VACCINATION OF IMMATURE MAMMALS
Robert A. Goodnow; Floyd J. Shade; Thomas A. Sloboth, and Donald J. Kaye, all of Omaha, Nebr., assignors to Schering Corporation, Kenilworth, N.J.
Filed Jun. 23, 1980, Ser. No. 161,997
Int. Cl.³ A61D *7/00;* A61M *11/06*
U.S. Cl. 128—200.14 **12 Claims**

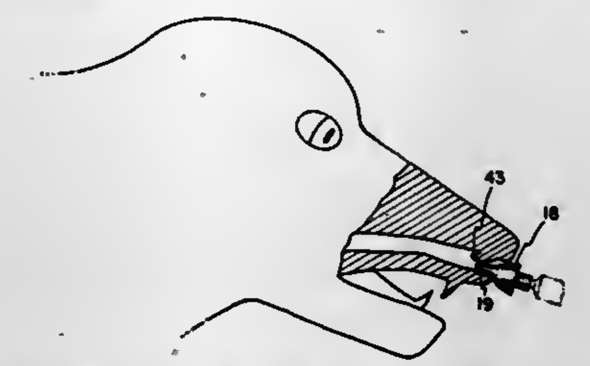

1. A nasal nozzle for insertion into the nasal cavities of mammals having alar folds for introducing fluid pharmaceutical composition comprising:
(a) a convex body continuously curving at radius of 0.5 to 1.0 inches from a wide portion to an apex, said convex body having an axis, the axial length of said convex body being 0.36 to 0.6 inches, the diameter of said wide portion measured perpendicular to said axis being 0.48 to 0.6 inches,
(b) elongated tip means for pushing aside the alar fold of the mammal upon insertion of said nozzle into the nasal cavity projecting from said apex along said axis, said tip means having length of 0.12 to 0.24 inches and outside diameter of 0.05 to 0.20 inches,
(c) a channel throughout said convex body and elongated tip means along said axis, said channel having decreasing area from a rear end of said channel to an outlet opening on an end of said elongated tip means, said outlet opening having diameter of 0.025 to 0.05 inches, said channel having non-uniform taper and having a rear section having uniform taper, an offset wherein the angle included between said offset and said axis is from 25° to 45°, and a front section having uniform taper such that the cross-sectional area of said front section decreases by 25% to 45% per ½ inch of front section length, and
(d) adapting means for attaching said nozzle to a container for dispensing a pharmaceutical composition through said channel.

4,300,546
HAND-HELD ATOMIZER ESPECIALLY FOR DISPENSING INHALATION-ADMINISTERED MEDICAMENTS
H. W. Kruber, Fachbach, Fed. Rep. of Germany, assignor to Carl Heyer GmbH Inhalationstechnik, Bad Ems, Fed. Rep. of Germany
Filed Nov. 14, 1979, Ser. No. 94,064
Claims priority, application Fed. Rep. of Germany, Nov. 15, 1978, 2849493
Int. Cl.³ A61M *11/00*
U.S. Cl. 128—200.16 **8 Claims**

1. A hand-held aerosol dispenser, especially for medicaments in inhalant therapy, comprising:
a housing formed with a compartment having an open upper end, receptacle means mounted in said compartment for holding a quantity of liquid to be converted into an aerosol and having an aerosol outlet;
an easily manipulated closure means mounted on said housing for covering said open upper end and for opening and closing said aerosol outlet;
an electrically operated ultrasonic nebulizer operatively associated with said receptacle means for generating an aerosol of said liquid therein;
a removable cartridge-type battery received in said housing for forming an electrical current source; and
circuitry means in said housing connecting said source with said ultrasonic nebulizer, said receptacle means being a phial enclosed by a wall of said housing, said wall forming

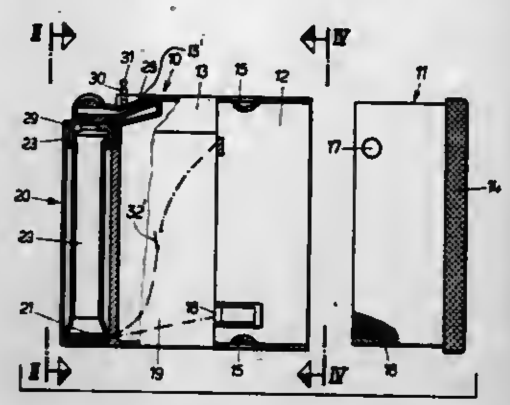

said compartment at an end of said housing remote from said battery, said closure means including a cap sealingly engaging with said open upper end of said compartment and with said open upper end of said compartment and with said aerosol outlet of said phial and having a closure member therein for opening and closing said aerosol outlet said housing being formed with a socket receiving said battery.

4,300,547
RESPIRATOR HAVING MEANS FOR COOLING INHALATION AIR
Adalbert Pasternack, Bad Schwartau, Fed. Rep. of Germany, assignor to Drägerwerk Aktiengesellschaft, Fed. Rep. of Germany
Filed Apr. 21, 1980, Ser. No. 142,149
Claims priority, application Fed. Rep. of Germany, May 8, 1979, 2918456
Int. Cl.³ A62B *7/08*
U.S. Cl. 128—202.26 **6 Claims**

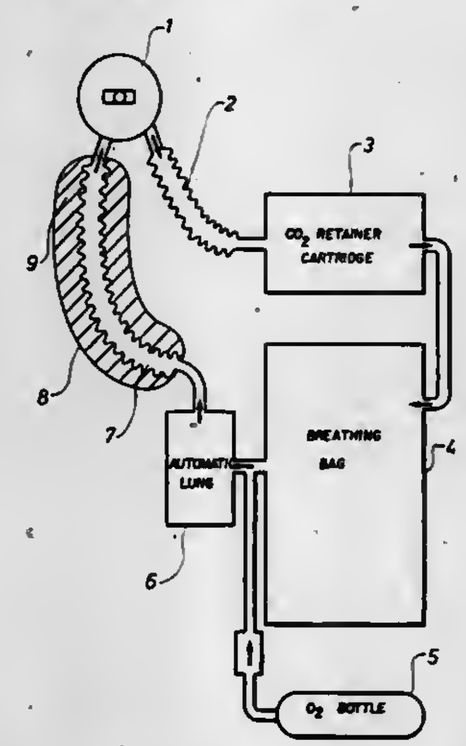

1. An improved respirator of the type having a chemical absorption cartridge for exothermically fixing carbon dioxide and generating oxygen, a breathing conduit means connected to the chemical absorption cartridge for passing expiratory air from a person using the respirator into said cartridge and inhalation air from the cartridge to the person using the respirator, and wherein the breathing conduit means has an imperforate tubular portion, the improvement, in combination therewith, comprising means for evaporatively cooling the conduit means, said cooling means comprising a sheath of a liquid-absorbent material mounted on and encircling the imperforate tubular portion whereby when said liquid absorbent material is wetted, the heated inhalation air will evaporate the liquid and thereby cooled.

4,300,548
SYSTEM FOR DETECTING POSITION OF GAUGE POINTER
George D. Jones, Deerfield, Wis., assignor to Airco, Inc., Montvale, N.J.
Division of Ser. No. 899,929, Apr. 26, 1978, Pat. No. 4,214,155. This application Dec. 3, 1979, Ser. No. 99,458
Int. Cl.³ A61M *16/00*
U.S. Cl. 128—204.21 **4 Claims**

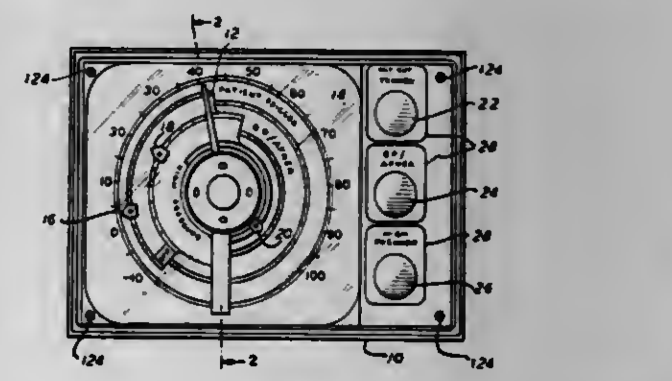

1. In a medical respirator for delivering gas to a patient through a patient circuit, said medical respirator including a pressure gauge having indicia for visually monitoring the pressure of gas within the patient circuit, said pressure gauge having a faceplate with said indicia thereon and a pointer movable in a plane generally parallel to the plane of said faceplate in response to changes in said monitored pressure, the improvement comprising means to detect a predetermined position of said pointer to affect a function of the respirator, said means including a light source means directing an elongated beam of light toward one side of said pointer opposite said faceplate, light detector means on the other side of said pointer slidably mounted with respect to said faceplate along said indicia and in a plane generally parallel to the plane in which said pointer is movable, said light detector means adapted to sense a diminishment of the intensity of said elongated beam of light when said pointer is positioned substantially directly between said light source means and said light detector means and thereby affect said function of the respirator, and control means located external of said pressure gauge to selectively move said light detector means to any desired position along the indicia to change the detected predetermined position of said pointer by reference to the indicia.

4,300,549
OPERATING ROOM FACE MASK
Duane A. Parker, North Plainfield, N.J., assignor to Surgikos, New Brunswick, N.J.
Filed Jan. 7, 1980, Ser. No. 109,948
Int. Cl.³ A62B *7/10*
U.S. Cl. 128—206.19 **9 Claims**

1. A disposable face mask comprising a flat pleated laminate capable of being opened to fit the wearer and having means to secure said laminate over the nose and mouth, said laminate having a first outer layer of fusible material, a second inner layer of filter media, and an innermost layer of fusible facing material, said laminate also having a top edge, a bottom edge, and two side edges, said laminate being folded to form a plurality of parallel pleats, each pleat extending from one side to the other, the layers of said folded laminate and the ends of the pleats therein being fastened together along the top, bottom and side edges, the folded edge of at least one of said pleats

being fused along substantially its entire length to reinforce the pleat edge such that when the pleat is opened when the mask

is worn, the reinforced pleat edges maintain the face mask away from the mouth and nose of the wearer during use.

4,300,550

SUCTION AND OXYGENATION CATHETER

Robert A. Gandi, New York, N.Y., and Anthony P. Martino, Wayne, N.J., assignors to Becton, Dickinson and Company, Paramus, N.J.

Continuation of Ser. No. 900,144, Apr. 26, 1978, abandoned. This application Mar. 7, 1980, Ser. No. 128,143

Int. Cl.³ A61M *16/00*

U.S. Cl. 128—207.18 **6 Claims**

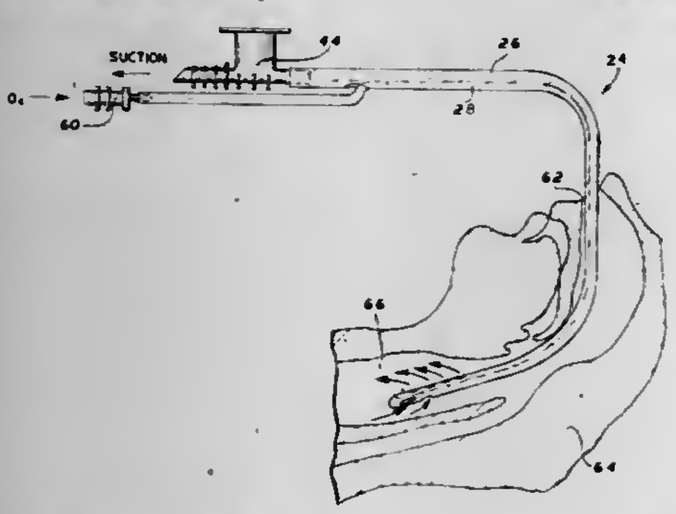

1. A catheter for use in simultaneously oxygenating and aspirating a patient comprising; an elongated flexible tube arrangement adapted to have at least one end portion extended into the tracheal/bronchial passage of a patient, the tube arrangement having two separate lumens therethrough, one lumen having an opening through one end portion and a plurality of holes through the side of said one end portion and adapted to be connected at the other end of the tube to a source of suction to permit aspiration of material from the patient through the one lumen, and the other lumen being closed at the one end and having a plurality of holes through the side of its end portion and adapted to be connected at the other end to a source of oxygen to permit the oxygenating of the patient through the other lumen while the patient is aspirated through the one lumen enabling the separated lumens to operate independent of one another, said side holes in the one lumen being separated from said side holes in the other lumen to facilitate independent simultaneous oxygenating and suctioning of the patient, and the tube arrangement having a smooth outer surface along a continuous arc at least along the one end portion adapted to extend into the tracheal/bronchial passage of the patient thus alleviating patient trauma.

4,300,551

METHOD FOR TREATING SCHIZOPHRENIA

Michael J. Kinney, Suite 909 - Mt. Huntington, Huntington, W. Va. 25701

Continuation-in-part of Ser. No. 902,729, May 2, 1978, abandoned. This application Sep. 4, 1979, Ser. No. 72,718

Int. Cl.³ A61M *5/00*

U.S. Cl. 128—214 R **9 Claims**

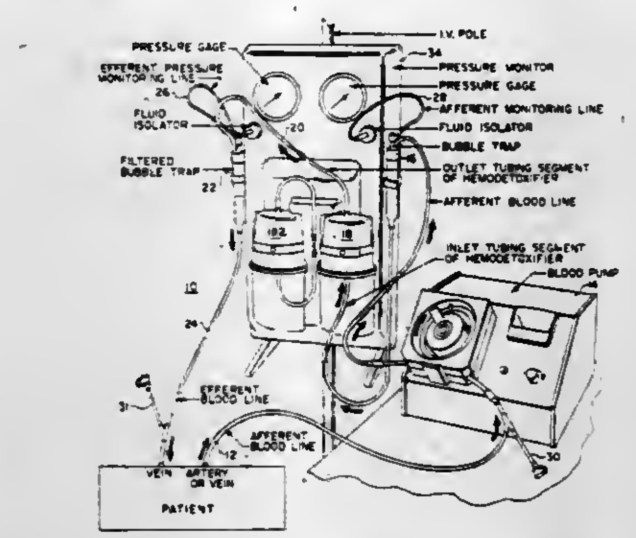

4. The method of treating schizophrenia in a human patient using a sterile activated carbon medium perfusion filter, comprising the steps of

(a) forming an extracorporeal blood circulation path from the patient to and through the activated carbon medium filter and back to the patient;

(b) circulating blood from the patient through that path for a period of time and returning the filtered blood to the patient; and

(c) repeating the above steps at intervals until the schizophrenic symptoms are lessened; and

whereby the patient's schizophrenia is at least temporarily improved.

4,300,552

APPARATUS FOR CONTROLLING THE FLOW OF INTRAVENOUS FLUID TO A PATIENT

Raymond E. Cannon, San Diego, Calif., assignor to Imed Corporation, San Diego, Calif.

Continuation-in-part of Ser. No. 938,910, Sep. 1, 1978, abandoned. This application Apr. 4, 1980, Ser. No. 137,557

Int. Cl.³ A61M *5/00*

U.S. Cl. 128—214 E **52 Claims**

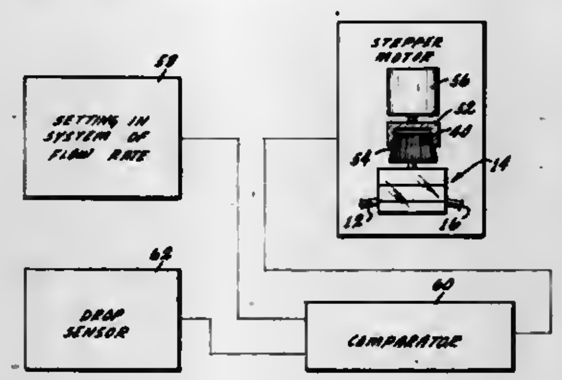

1. In combination for controlling the rate of flow of fluid to a patient,

means for providing for a source of fluid,

means defining an inlet line from the souce and an outlet line to the patient,

means disposed between the inlet line and the outlet line for defining a passage communicating with the inlet and outlet lines,

resilient means defining a particular periphery of, and communicating with, the inlet and outlet lines for controlling the size of the passage in accordance with the positioning of the resilient means, and

a button disposed in the channel between the inlet line and the outlet line,

means adjustably positioned and coupled to the resilient means for varying the positioning of the resilient means in the passage in accordance with such adjustable positioning, to control the rate at which fluid flows through the inlet line to the outlet line,

one of the resilient means, the button and the coupling means being provided with a channel to control the rate at which the fluid flows through the passage between the inlet and outlet lines in accordance with the variations in the positioning of the resilient means.

4,300,553

WINGED CATHETER PLACEMENT ASSEMBLY

Charles H. Seberg, Libertyville, Ill., assignor to Abbott Laboratories, North Chicago, Ill.

Continuation-in-part of Ser. No. 950,941, Oct. 12, 1978, Pat. No. 4,194,504. This application Apr. 19, 1979, Ser. No. 31,370

Int. Cl.³ A61M *5/00*

U.S. Cl. 128—214.4 **6 Claims**

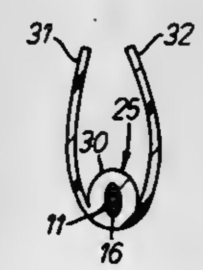

1. In an intravenous catheter assembly including (1) a catheter unit comprising:

(a) a flexible plastic catheter having a distally tapered distal end,

(b) a winged catheter insertion means comprising a tubular body having a lumen therethrough and a pair of wings having substantially uniform thickness extending oppositely therefrom, the proximal end of said catheter in communication with said lumen of said catheter insertion means via its distal end,

(c) a flexible tubing having its distal end in communication with said lumen of said catheter insertion means via its proximal end,

(d) a tube hub having a lumen therethrough, the proximal end of said flexible tubing in communication with said lumen of said tube hub via its distal end, and (2) a needle unit inserted through said catheter, winged catheter insertion means, flexible tubing and tube hub; the improvement which comprises:

said needle unit comprising a needle having a sharpened distal end extending beyond said distal end of said catheter, and a flexible stylet joining the proximal end of said needle to the distal end of a needle hub,

complementary means associated with said lumen of said winged catheter insertion means and said needle mechanically interlocked to provide distally axial and rotational alignment of said needle relative to said catheter unit, and

an area of reduced thickness on each of said wings along at least a portion of the width thereof substantially adjacent to said tubular body and providing improved flexibility to said wings, said lumen of said winged catheter insertion means having a diameter predetermined to only capture said needle within said tubular body by the distortion of said lumen of said winged catheter insertion means when said wings are simultaneously held in a substantially vertical position.

4,300,554

PORTABLE INFUSION APPARATUS

Siegfried Hessberg, Melsungen, and Werner Dold, Triberg, both of Fed. Rep. of Germany, assignors to Intermedicat GmbH, Emmenbrucke, Switzerland

Filed Feb. 14, 1980, Ser. No. 121,494

Claims priority, application Fed. Rep. of Germany, Feb. 22, 1979, 2906830

Int. Cl.³ A61M *5/00*

U.S. Cl. 128—218 A **17 Claims**

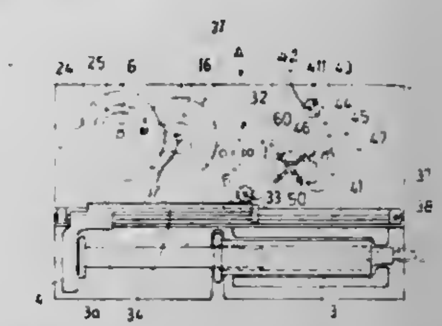

1. In an apparatus for continuous infusion of a liquid from an injection syringe having a plunger, a spring driven mechanism for advancing the syringe piston and a mechanical clockwork for controlling the piston advance, the improvement comprising a piston drive mechanism actuated by a first spring and wheel transmission and a clockwork control operated by a second spring and wheel transmission.

4,300,555

PRODUCT, COMPOSITION, AND PROCESS FOR ANORECTAL PROPHYLACTIC AND/OR THERAPEUTIC CARE

Louis Kopito, 204 Clinton Rd., Brookline, Mass. 02146

Filed Dec. 17, 1979, Ser. No. 104,131

Int. Cl.³ A61M *7/00*

U.S. Cl. 128—248 **13 Claims**

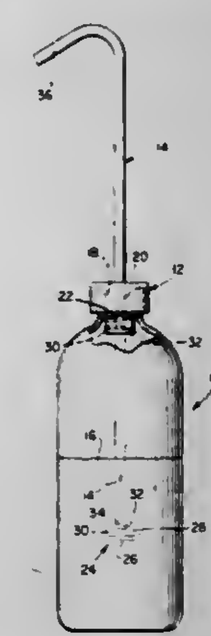

1. A product comprising a dispenser for containing and dispensing a formulation therewithin for application to the anorectal region:

(a) said dispenser including container means and nozzle means, said dispenser being composed of a flexible polymer, said container means being operatively associated with pressure means for ejecting said formulation from said container means through said nozzle means, said nozzle means having a reversely directed mouth so as to be directed toward the anorectal region when said dispenser is held manually;

(b) said formulation being an aqueous dispersion of agents including a film former, a surfactant, and a healing accel-

erator, said agents being present in concentrations that total less than ten percent;

(c) the viscosity of said formulation being within the range of from 20 to 500 centipoises, said mouth of said nozzle being characterized by a stream inducing orifice, said viscosity and said orifice being related to produce a jet when pressure is applied to said formulation within said dispenser;

(d) said mouth being characterized by a venturi configuration having an inner chamber, an inner neck of diameter D_2, an outer chamber of diameter D and length L_2, and an outer neck of diameter D_3 and length L_1, such that $L_1 = D_1$, L_2 = from 2D to $3D_1$, D_2 = from 0.3 to $0.5D_1$, and D_3 = from 0.005 to $0.2D_1$.

4,300,556

FACIAL BEAUTY DEVICE

Shuhei Ochi; Fumiya Ueda; Nobuyuki Morihara; Hiroshi Namba; Motohisa Nishino, and Shigeo Yamamoto, all of Hikone, Japan, assignors to Matsushita Electric Works, Ltd., Osaka, Japan

Filed Jul. 25, 1980, Ser. No. 172,706

Claims priority, application Japan, Jul. 25, 1979, 54/95258; Jan. 22, 1980, 55/6217

Int. Cl.³ A61F *7/00*

U.S. Cl. 128—256 **18 Claims**

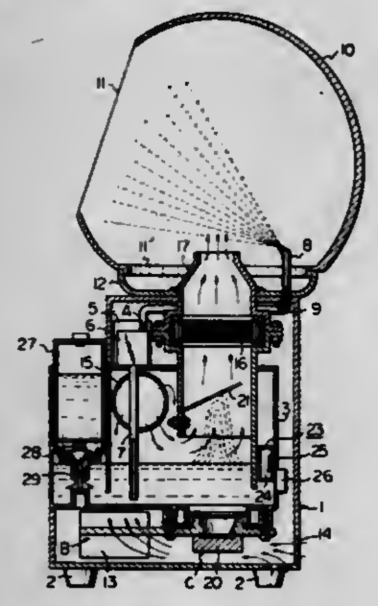

1. A facial beauty device including a body case, a hood mounted on said case and having an opening for resting thereagainst the user's face, and means for generating within said hood a heated and moistened atmosphere from water in a reservoir housed in the case; the device further comprising a passage communicating the upper space in said reservoir with the inner space of the hood and a water spraying means including a pump and nozzle housed within the case and spraying water in the reservoir substantially toward said opening of the hood, and said atmosphere generating means comprising means provided in the bottom of the reservoir for generating a mist within said passage by oscillating water in the reservoir, means for generating a moistened air stream directed toward the inner space of the hood through the passage together with said mist, and means for heating at least a part of said moistened air stream.

4,300,557

METHOD FOR TREATING INTRAOCULAR MALIGNANCIES

Miguel F. Refojo, Boston, and Hsaio S. Lin, Arlington, both of Mass., assignors to The United States of America as represented by the Secretary of the Department of Health and Human Services, Washington, D.C.

Filed Jan. 7, 1980, Ser. No. 110,045

Int. Cl.³ A61M *7/00*

U.S. Cl. 128—260 **7 Claims**

1. In the process of dispensing a lipid-soluble, labile drug by diffusion through an implantable silicone capsule to a site within an animal body being treated with the drug, the improvements wherein the silicone capsule is provided with a tube sealed at the distal end thereof and provided with a longitudinal slit cut through the tube wall inside the capsule for filling the capsule following implantation of the capsule, wherein the capsule is implanted surgically near the site being treated so that the tube is accessible for filling without further surgical procedures and wherein the drug is injected into the capsule through the tube in the form of a solution in a solvent which is non-toxic to the animal being treated, inert with respect to the drug dissolved therein and capable of diffusing from the capsule within 5 hours to leave a residue of the drug in the capsule.

4,300,558

SELF-DRIVEN FLUID DISPENSER

James B. Eckenhoff, Los Altos, and Felix A. Landrau, Milpitas, both of Calif., assignors to ALZA Corporation, Palo Alto, Calif.

Filed Jul. 18, 1980, Ser. No. 170,079

Int. Cl.³ A61M *7/00*

U.S. Cl. 128—260 **2 Claims**

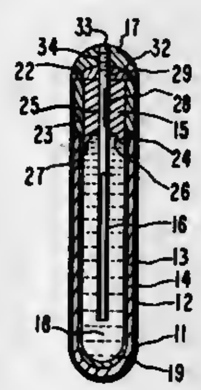

1. In a fluid dispenser comprising an outer rigid semipermeable membrane that acts as a housing, an inner collapsible bag housed within the membrane that is adapted to contain the fluid, a water-imbibing composition interposed between the outer membrane and the inner bag, and a port that extends from the interior of the bag to the exterior of the dispenser through which the fluid may be charged into the bag and discharged from the bag, the improvement wherein the outer membrane is made from a blend consisting essentially of a major proportion by weight of cellulose acetate butyrate and a minor proportion by weight polymethylmethacrylate.

4,300,559

BLOOD COMPATIBLE POLYMERS AND MEDICAL DEVICES MADE THEREFROM

Henry M. Gajewski, Winnetka, and Paul E. Measells, Libertyville, both of Ill., assignors to Baxter Travenol Laboratories, Inc., Deerfield, Ill.

Continuation of Ser. No. 954,801, Nov. 26, 1978, abandoned. This application May 19, 1980, Ser. No. 151,448

Int. Cl.³ A61M *5/00;* **A61J** *1/00*

U.S. Cl. 128—272 **6 Claims**

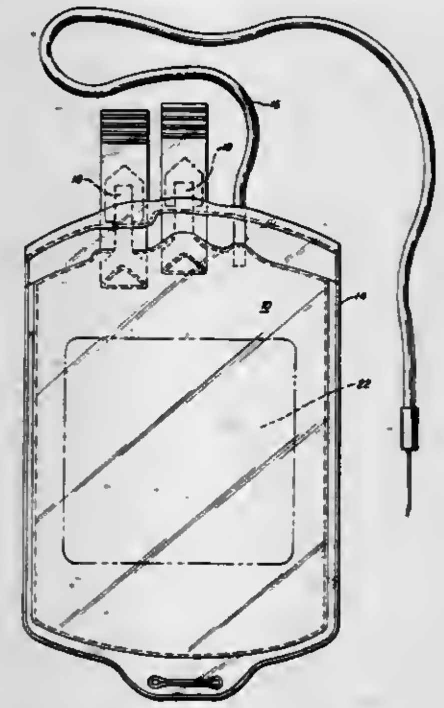

1. The method of storing blood which comprises placing said blood for a period of days into a flexible, hemocompatible, sterilizable polyester plastic material which contains sufficient dioctylphthalate to cause a reduced plasma hemoglobin content of blood stored in contact therewith for 21 days, when compared with blood stored in contact with the same blood-compatible material free of dioctylphthalate.

4,300,560

OSTOMY BAG HAVING A BOTTOM DRAIN VALVE

Peter L. Steer, and John V. Edwards, both of, East Grinstead, England, assignors to Kingsdown Medical Consultants, Ltd., London, England

Filed Mar. 10, 1980, Ser. No. 129,147

Claims priority, application United Kingdom, Aug. 6, 1979, 7927295

Int. Cl.³ A61F *5/44*

U.S. Cl. 128—283 **9 Claims**

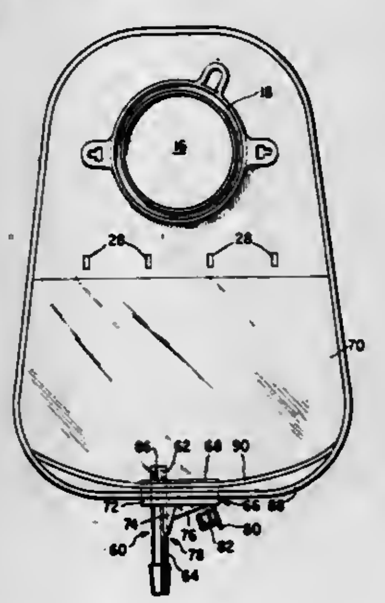

1. An ostomy bag having front and rear walls of synthetic plastics material sealed to each other around their periphery, an opening in said rear wall for passage of the stoma, and a drain valve secured in an opening at the lower region of said bag, said valve comprising a mounting plate having a tube passing therethrough, a stopper dimensioned to fit in said tube and connected by a tab to the bottom of said mounting plate, and a support web extending from the bottom of said mounting plate to a portion of said tube below said mounting plate whereby the lower portion of said tube is bent over said support web and sealed by said stopper.

4,300,561

EASILY REMOVABLE TAMPON

Leonard M. Kaczmarzyk; James J. Hlaban, both of Neenah, and David M. Jackson, Appleton, all of Wis., assignors to Kimberly-Clark Corporation, Neenah, Wis.

Filed Oct. 22, 1979, Ser. No. 86,808

Int. Cl.³ A61F *13/20*

U.S. Cl. 128—285 **4 Claims**

1. A tampon having a fluid permeable cover and an emollient covering substantially the entire surface of the cover which is liquid at room temperature and coated on the surface of the cover said coating selected from the group consisting of myreth-3 myristate, glycereth polyethoxy cocoate, and isopropyl palmitate, said permeable cover having an absorbent compound therein.

4,300,562

LAMINATED STRUCTURES HAVING GATHERED MARGINAL PORTIONS

Heinz A. Pieniak, Chicago, Ill., assignor to Johnson & Johnson Baby Products Company, New Brunswick, N.J.

Filed Feb. 11, 1980, Ser. No. 120,195

Int. Cl.³ A41B *13/02, 7/00*

U.S. Cl. 128—287 **29 Claims**

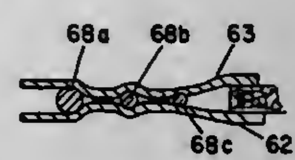

1. A laminated structure having a gathered marginal area to provide improved fit about a portion of the human body comprising: first and second layers positioned adjacent to one another, said layers being formed of flexible gatherable material, an elastic member disposed between said layers in the marginal area thereof, said elastic member comprising a plurality of interconnected longitudinally extending elastic elements defining apertures therebetween, said elements having different cross sectional areas to provide varying degrees of tension across the width of said marginal area, said first and second layers being secured together through at least some of said apertures.

4,300,563

REUSABLE BABY NAPKIN

Helen K. Brookfield, 36 Moorhouse St., Camberwell East, Victoria 3124, Australia

Continuation-in-part of Ser. No. 900,154, Apr. 16, 1978, abandoned. This application Jun. 16, 1980, Ser. No. 159,676

Int. Cl.³ A41B *13/02*

U.S. Cl. 128—287 **7 Claims**

1. A baby's reusable napkin for receiving a replaceable diaper, comprising: a moisture impervious outer layer and a relatively moisture absorbent inner layer having an exposed textured surface for receiving and retaining the replaceable diaper, said layers being substantially the same size and shape and secured to one another, said layers have opposing sides inwardly concavely curved along their entire length in a modified hyperbolic-like form to provide a narrow central portion straddled by the baby when the napkin is worn, the transverse axes of the hyperbolic-like curves of said sides converging

toward the front of said napkin and intersecting at an angle of less than 180°, said curved sides to configuring said napkin that it is non-symmetrical about a crosswise line intersecting said sides in said narrow central portion to provide a greater area to the region of the napkin that, in use, will be adjacent the buttocks and back of the baby than to the region that will be in front, said layers having both ends arcuately inwardly curved

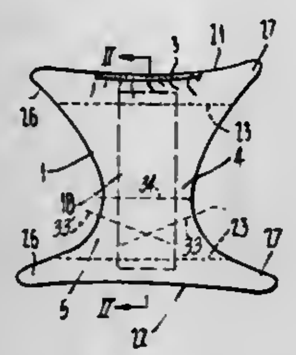

to a lesser extent than said sides, said end of said napkin that, in use, will be adjacent the waist at the back of the baby containing an elastic construction centrally located on said end for providing a fullness to the napkin in the region that, in use, will be adjacent the buttocks of the baby, said curved ends and sides forming corner portions sufficiently extended as to permit them to be tied together about the baby for securing the napkin to the baby.

4,300,564

FORCEPS FOR EXTRACTING STONES IN THE PELVIS OF A KIDNEY

Hiroyuki Furihata, Hamura, Japan, assignor to Olympus Optical Co., Ltd., Tokyo, Japan

Filed Nov. 1, 1979, Ser. No. 90,279

Claims priority, application Japan, Nov. 9, 1978, 53-138265

Int. Cl.³ A61B *17/28, 1/00*

U.S. Cl. 128—321 **6 Claims**

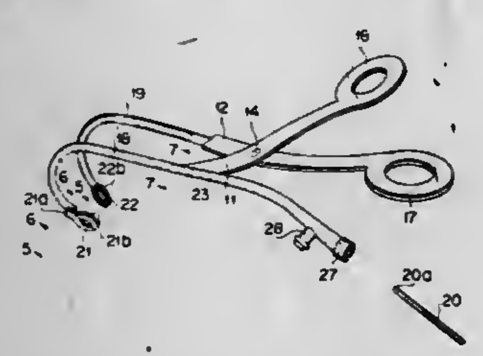

1. A forceps for extracting stones in the pelvis of a kidney comprising:

a pair of shanks pivotally connected to each other, each of said shanks having two opposite ends;

a pair of finger rings, each of said finger rings being coupled to one of said two opposite ends of a respective shank, said finger rings being movable relative to each other in a plane to pivotally move said shanks relative to each other about the pivotal connection of said shanks;

a pair of elongate arms each secured to the other end of a respective shank, each of said elongate arms having a distal end and a proximal end, the distal end of each elongate arm being more remote from the corresponding finger ring than the proximal end and the distal ends of each elongate arm being curved to deviate from the plane in which said finger rings are movable, at least one of said elongate arms being a tubular member into which a front viewing type telescope is insertable, said at least one tubular elongate arm having an intermediate part connected to said other end of the corresponding shank and having a curved part located between said intermediate part and said proximal end of said at least one elongate arm, said curved part being curved in a direction to extend away from both of said shanks, the direction of curvature of said curved part being that direction in which said curved part is separated in said plane from the finger ring provided on the other shank so that the portion of said tubular elongate arm between said intermediate part and said proximal end is substantially spaced away from said other shank;

said shank which is connected to said intermediate part of said tubular elongate arm angularly extending away from said tubular elongate arm in a direction opposite to the direction of curvature of said curved part of said tubular elongate arm;

the pivotal connection of said shanks to each other being spaced a substantial distance from said tubular elongate arm;

a telescope which is insertable into said at least one tubular elongate arm; and

a pair of mutually facing stone-clamping members secured to respective distal ends of said elongate arms so as to be in the field of view of a telescope inserted into said tubular elongate arm.

4,300,565

SYNTHETIC POLYESTER SURGICAL ARTICLES

Michael N. Rosensaft, Monsey, N.Y., and Richard L. Webb, Darien, Conn., assignors to American Cyanamid Company, Stamford, Conn.

Continuation-in-part of Ser. No. 143,978, Apr. 28, 1980, which is a division of Ser. No. 960,264, Nov. 13, 1978, which is a continuation-in-part of Ser. No. 799,836, May 23, 1977, abandoned. This application Sep. 26, 1980, Ser. No. 191,655

Int. Cl.³ A61L *17/00;* **C08G** *63/08;* **C08L** *67/04*

U.S. Cl. 128—335.5 **17 Claims**

1. A sterile surgical article fabricated from a synthetic absorbable copolymer formed by copolymerizing glycolide as the predominant monomer with a cyclic ester monomer other than glycolide, the improvement comprising employing sequential addition of the monomers in the polymerization wherein said glycolide monomer, said cyclic ester monomer, or a combination of said monomers is substantially completely polymerized before the addition of the other monomer or said combination.

4,300,566

CARDIAC PACER CIRCUIT

Richard E. Stindt, Coon Rapids, and Thomas C. Wright, New Brighton, both of Minn., assignors to Cardiac Pacemakers, Inc., St. Paul, Minn.

Filed Oct. 31, 1979, Ser. No. 89,959

Int. Cl.³ A61N *1/36*

U.S. Cl. 128—419 PG **1 Claim**

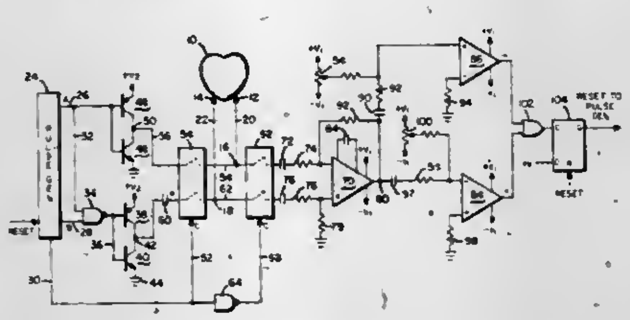

1. In a demand cardiac pacemaker of the type having a source of direct current voltage, a pulse generator connected to said source of direct current voltage for periodically producing triggering pulses in the absence of normal R-wave activity in the heart, a voltage doubler capacitor and a first semiconductor switching means responsive to said triggering pulses for selectively applying artificial stimulating pulses of a given amplitude to the heart by way of electrically conductive leads and electrodes, and a sensing amplifier exhibiting a relatively high input impedance and having input terminals coupled to said electrodes by way of said leads for receiving and amplifying heart depolarizing R-wave signals, the improvement comprising:

(a) second semiconductor switching means coupled between said electrodes and said input terminals of said sensing amplifier and third semiconductor switching means coupled between said electrodes and said voltage doubler capacitor for disconnecting said electrodes from said input terminals and for connecting said voltage doubler capacitor to said electrodes during a predetermined interval following the application of one of said triggering pulses to said first semiconductor switching means; and

(b) further semiconductor switching means selectively exhibiting a low impedance for coupling said source of direct current voltage through said heart to said voltage doubling capacitor for a relatively short predetermined time following termination of said one of said triggering pulses for rapidly restoring the charge on said voltage doubling capacitor.

4,300,567

METHOD AND APPARATUS FOR EFFECTING AUTOMATIC VENTRICULAR DEFIBRILLATION AND/OR DEMAND CARDIOVERSION THROUGH THE MEANS OF AN IMPLANTED AUTOMATIC DEFIBRILLATOR

Steve Kolenik, Leechburg, and Alois A. Langer, Pittsburgh, both of Pa., assignors to Mieczyslaw Mirowski, Owings Mills, Md.

Filed Feb. 11, 1980, Ser. No. 120,100

Int. Cl.³ A61N *1/36*

U.S. Cl. 128—419 D **24 Claims**

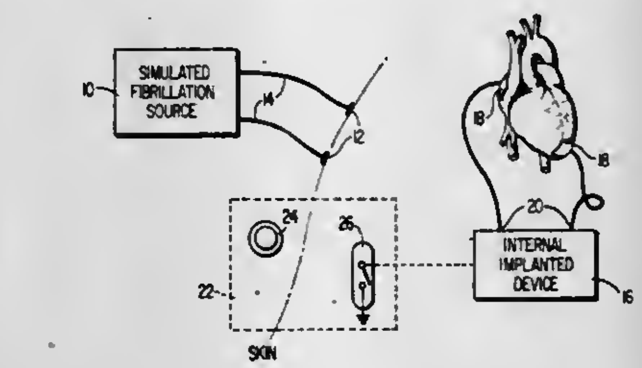

1. A method of effecting demand cardioversion of a patient by means of an implanted automatic defibrillator, comprising the steps of:

applying a simulated fibrillation signal to the skin of the patient;

sensing the simulated fibrillation signal by means of the implanted automatic defibrillator; and

in response to said sensed simulated fibrillation signal, converting the implanted automatic defibrillator to a cardioverting device and actuating the implanted automatic defibrillator to effect demand cardioversion of the patient.

4,300,568

THERAPEUTIC BRA

Charles Blanckmeister, 88-48 74th Pl., Woodhaven, N.Y. 11421

Filed May 25, 1979, Ser. No. 42,985

Int. Cl.³ A41C *3/00*

U.S. Cl. 128—509 **1 Claim**

1. A therapeutic bra, comprising, in combination, a pair of breast cups adjacent to each other, a tab adjacent a side of each said cup for extending around a back of a wearer and having rings at their ends, a pair of shoulder straps between each said cup and an end of each said tab, a lower edge tape stitched along a lower edge of said cups and tabs, and a single draw tape for drawing said tab ends toward each other; said draw tape being of relatively long length and attached at its one end to one said tab end; said relatively long draw tape being laced through said rings on each of said tab ends so that said tabs may be permanently tied together, a loop-pile fastener element on an opposite end of said draw tape being selectively engageable

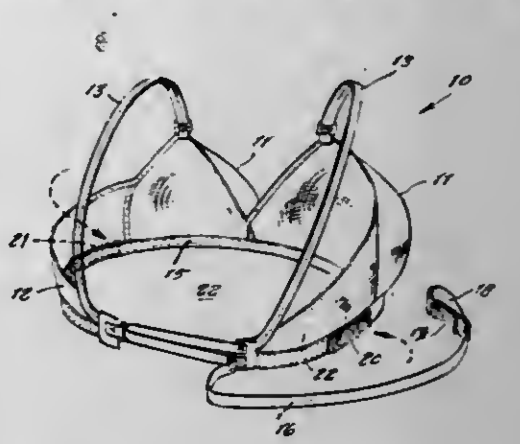

with co-operating loop-pile fastener elements on said lower edge tape.

4,300,569

RED BLOOD CELL LABELLING KIT

Paul-Emile Bonneau, Montreal, Canada, assignor to Merck & Co., Inc., Rahway, N.J.

Division of Ser. No. 903,448, May 8, 1978. This application Feb. 25, 1980, Ser. No. 124,166

Claims priority, application Canada, Jun. 17, 1977, 280764

Int. Cl.³ A61K *43/00;* **A61B** *5/00*

U.S. Cl. 128—654 **4 Claims**

1. A method of imaging blood pools in patients suspected of having cardiovascular abnormalities which comprises the steps of

(1) intravenous injection of a solution comprising a water soluble, non-toxic, pharmaceutically acceptable salt of ketoglucoheptonic acid and a water soluble, non-toxic stannous salt;

(2) waiting a period of 30 minutes; and

(3) intravenous injection of a sterile saline solution containing from 2–20 mCi of sodium pertechnetate-Tc99m.

4,300,570

DIAGNOSTIC METHOD

Adolf Stafl, Brookfield, Wis., assignor to The Medical College of Wisconsin, Inc., Milwaukee, Wis.

Filed Apr. 24, 1980, Ser. No. 143,429

Int. Cl.³ A61B *1/00*

U.S. Cl. 128—665 **4 Claims**

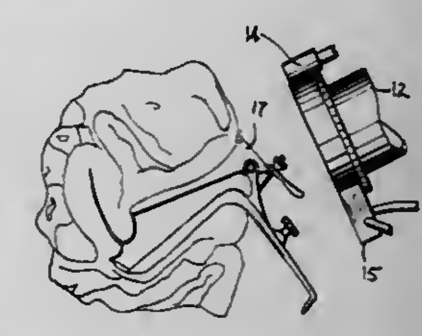

1. A method of detecting cervical cancer and other abnormalities of the cervix which comprises illuminating the cervix, viewing the cervix through the viewer of a single lens reflex camera equipped with an extender and a telelens which is mounted on the extender with said telelens being positioned at least 15 centimeters from the cervix, taking a slide photograph of the cervix, developing and projecting the slide photograph on a screen so that the projected image substantially fills the screen and then visually evaluating the projected image from a very close distance and noting any abnormalities.

4,300,571
CONSTANT FLUSH DEVICE
Charles C. Waldbillig, Columbus, Ohio, assignor to Medex Inc., Hilliard, Ohio
Filed Jul. 27, 1979, Ser. No. 61,305
Int. Cl.[3] A61B *5/02*
U.S. Cl. 128—673 **2 Claims**

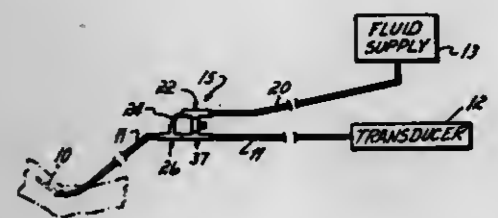

1. In a constant flush system, including a catheter, a transducer, a main tube connected between said catheter and said transducer, and a fluid supply, a flow control connecting said fluid supply to said main tube, comprising,
means forming a capillary flow path from said fluid supply to said main tube,
a bypass flush valve from said fluid supply to said main tube comprising,
a plug having a central annular collar,
longitudinal grooves in said plug from each of its ends to said collar,
a resilient sleeve normally surrounding said collar in fluid-tight relation,
means connecting said sleeve between said supply and said main tube,
the end portions of said plug being of a reduced diameter,
fittings connected to said fluid supply and said main tube, said fittings receiving said reduced plug ends and abutting said collar,
said grooves having radial passages between said collar and said fittings to provide passageways to the external surface of the said collar while permitting minimal exposure of said sleeve to a column of fluid.

4,300,572
FLUID ADMINISTERING AND PRESSURE SENSING APPARATUS
David R. Knighton, 80 Southwood Dr., San Francisco, Calif. 94112
Filed Dec. 13, 1979, Ser. No. 103,373
Int. Cl.[3] A61M *5/14;* **A61B** *5/02*
U.S. Cl. 128—674 **9 Claims**

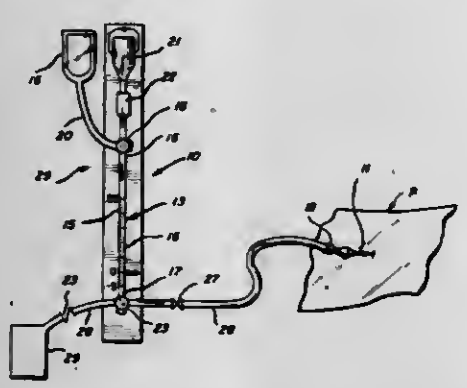

1. A completely closed system for selectively measuring central venous pressure and effecting hyperalimentation of a patient through a single catheter inserted into a vein of the patient, said apparatus comprising:
a manometer having a vertical measuring tube defining an upper end portion and a lower end portion;
a first selector valve connected to said upper end portion of the manometer tube;
a hyperalimentation fluid supply;
means for connecting said hyperalimentation fluid supply to said valve;
a sterile air supply;
means for connecting said sterile air supply to said valve, said valve being arranged to connect alternatively (a) said hyperalimentation fluid supply or (b) said sterile air supply to said upper end portion of the manometer tube;
a second selector valve connected to said lower end portion of the manometer tube;
a waste container;
means for connecting said waste container to said second selector valve; and
means for connecting said catheter to said second selector valve, said second selector valve being arranged to connect alternatively said lower end portion of the manometer tube to (a) the waste container or (b) said catheter.

4,300,573
SPHYGMOMANOMETER
Klaus Rebbe; Berd Rosicke, and Klaus Wellmann, all of Mannheim, Fed. Rep. of Germany, assignors to Clinocon International GmbH, Mannheim, Fed. Rep. of Germany
Filed Nov. 15, 1979, Ser. No. 94,511
Claims priority, application Fed. Rep. of Germany, Dec. 8, 1978, 2853098
Int. Cl.[3] A61B *5/02*
U.S. Cl. 128—686 **5 Claims**

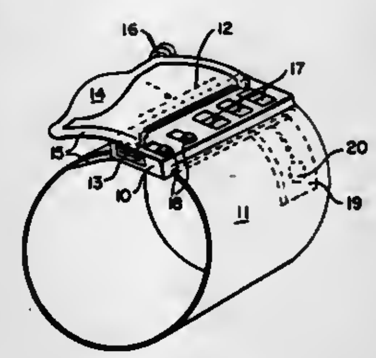

1. In a sphygmomanometer having a microphone, readout means for displaying blood pressure values, a circuit receptive of the signals from the microphone for producing an output applied to the readout means, an inflatable cuff band and means forming a buckle for the cuff band, the improvement wherein: the buckle forming means comprises a housing accommodating the readout means and circuit, means permanently attaching one end of the cuff band to the housing and means defining an elongated slit at least adjacent to the housing through which the free end of the cuff band is received; and the microphone is connected to the cuff band and spaced from the buckle.

4,300,574
DEVICE FOR MEASURING AND INDICATING CHANGES IN RESISTANCE OF A LIVING BODY
James Briggs, Pasadena, Calif., assignor to Frank Zurn, Hollywood, Calif.
Filed Dec. 19, 1979, Ser. No. 105,395
Int. Cl.[3] A61B *5/05*
U.S. Cl. 128—734 **11 Claims**

1. A device for measuring and indicating the changes in resistance of a living body comprising:
a single battery;
a means for setting a reference voltage level provided across the battery;
a unity gain high input impedance and low output impedance buffer amplifier having as its input the reference voltage level;
a balanceable resistance bridge having the output of the buffer amplifier applied thereto, said bridge being arranged such that the living body is couplable thereto as part of said bridge;

a meter amplifier for amplifying any imbalances in the bridge caused by changes in the resistance of a living body when said living body is coupled thereto; and

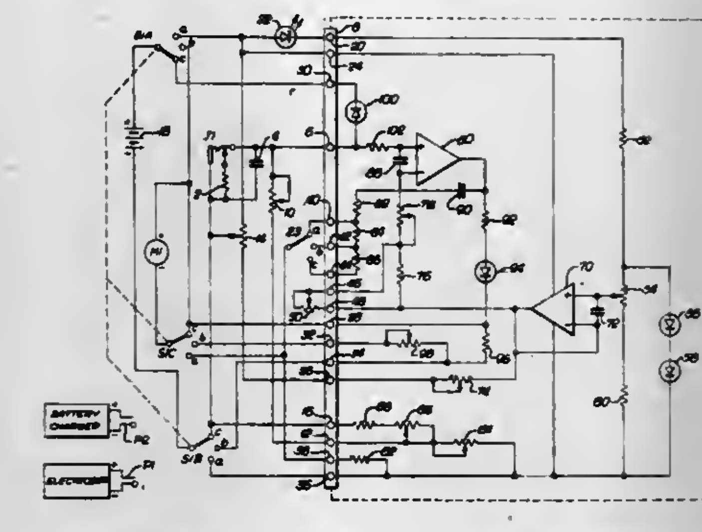

a meter coupled to the output of the meter amplifier for indicating the changes in resistance of the living body when said living body is coupled to said bridge.

4,300,575
AIR-PERMEABLE DISPOSABLE ELECTRODE
Michael A. Wilson, Loveland, Colo., assignor to Staodynamics, Inc., Longmont, Colo.
Filed Jun. 25, 1979, Ser. No. 51,593
Int. Cl.[3] A61N *1/04*
U.S. Cl. 128—798 **15 Claims**

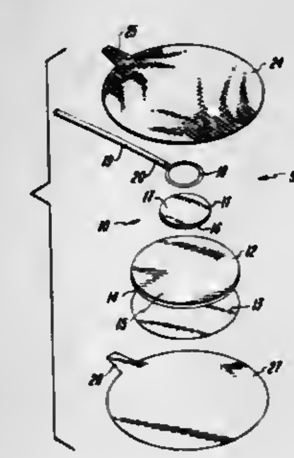

1. A skin engageable disposable electrode for use with an electronic instrument having at least one electrical lead connectable with said electrode, said electrode comprising:
a carbon-filled silicone pad having a substantially flat front face portion and a back portion adapted to contact said electrical lead for coupling electrical signals to said electrode; and
an air-permeable conductive element including carbon and karaya material and having a substantially flat front face portion with an air-permeable conductive adhesive coating including karaya thereon so that said front face portion is adapted to be engageable with the skin of a user, and a substantially flat back face portion in engagement with said front face portion of said pad, said conductive element being of large size relative to said pad.

4,300,576
SMOKING ARTICLES CONTAINING THAUMATIN OR MONELLIN
Henricus E. van der Loo; Charles Wiener, both of Middletown, N.Y., and John D. Higginbotham, Reading, England, assignors to Talres Development (N.A.) N.V., Netherlands Antilles
Filed Apr. 24, 1978, Ser. No. 899,113
Claims priority, application United Kingdom, Apr. 26, 1977, 17334/77; Jan. 30, 1978, 3719/78
Int. Cl.[3] A24B *15/30, 3/12*
U.S. Cl. 131—335 **13 Claims**

1. A tobacco-containing smoking article, containing a sweet protein selected from the group consisting of thaumatin and monellin at a location in the interior of the article, whereby smoke passed to the mouth contacts the sweet protein, said protein being present in an amount effective to cause a perceived flavor of the article when in use without the protein to be smoother and more rounded and less harsh without being detectably sweetened thereby.

4,300,577
TOBACCO-SMOKE FILTERS
Henry G. Horsewell, Totton, and James W. P. Phelpstead, Southampton, both of England, assignors to British-American Tobacco Company Limited, London, England
Filed May 11, 1979, Ser. No. 38,013
Claims priority, application United Kingdom, May 16, 1978, 19977/78
Int. Cl.[3] A24D *3/12*
U.S. Cl. 131—334 **12 Claims**

1. A tobacco-smoke filter comprising a first component which is a ready but weakly retentive absorbent for vapour-phase constituents, of the group consisting of aldehydes, and hydrogen cyanide, of tobacco smoke, and closely intermingled therewith a second component comprising amino groups as chemically active functional entities capable of forming strong bonds with said constituents to give substantially non-volatile reaction products.

4,300,578
JEWELRY SMOKING DEVICE
George Gershbein, 30 W. 69th St., New York, N.Y. 10023
Continuation-in-part of Ser. No. 483,629, Jun. 27, 1974, Pat. No. 4,243,058. This application May 11, 1979, Ser. No. 38,290
Int. Cl.[3] A24F *5/10, 1/32, 3/00, 1/22*
U.S. Cl. 131—330 **11 Claims**

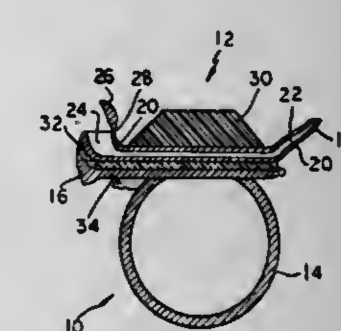

1. A combination jewelry and pipe smoking device comprising a tobacco receiving portion for receiving loose smoking tobacco; a mouthpiece portion; a conduit portion extending between said tobacco receiving and mouthpiece portions for conducting smoke from the former to the latter; mounting means for mounting the device on the body of the wearer and defining surfaces which normally comes into contact with the body of the wearer when said device is being smoked, whereby the jewelry and smoking device may be worn as an item of jewelry while smoking the same and may be smoked after being removed and manually supported subsequent to removal of the same from the wearer; insulating means in the nature of an insulating material associated with at least one of said sur-

faces for reducing the flow of heat from said tobacco receiving portion to said surface and for protecting the wearer from the heat developed in the device during smoking a mouthpiece portion; a conduit portion extending between said tobacco receiving and mouthpiece portions for conducting smoke from the former to the latter; said tobacco receiving portion having an external surface configuration providing a visual illusion of a smoking device; and camouflaging means having an external surface which forms part of and blends with said external surface configuration of said tobacco receiving portion for camouflaging the nature of the device as a smoking device and providing a visual illusion of a device other than a smoking device, whereby it is not visually discernable when worn as an item of jewelry that the device is also a smoking device.

4,300,579
PROCESS FOR THE MANUFACTURE OF A TOBACCO RIB CUT HAVING AN IMPROVED FILLING CAPACITY
Jörn Ulrich, Hamburg, Fed. Rep. of Germany, assignor to B.A.T. Cigaretten-Fabriken GmbH, Hamburg, Fed. Rep. of Germany
Filed Apr. 4, 1980, Ser. No. 137,325
Claims priority, application Fed. Rep. of Germany, Apr. 6, 1979, 2913823
Int. Cl.[3] A24B *3/18*
U.S. Cl. 131—290 **4 Claims**

1. A method for treating tobacco stems which comprises:
providing the tobacco stems in the uncut condition and having a moisture content of from 15 to 70% relative to the dry weight of the tobacco stems,
making more than one first cut in each tobacco stem, each first cut being disposed in a plane substantially parallel to the other and substantially parallel to the longitudinal axis of the tobacco stem,
conditioning the cut tobacco stems, and
performing more than one second cut in each tobacco stem, each second cut being substantially parallel to the other and to the longitudinal axis of the stem, and each first cut being disposed in a plane substantially perpendicular to the plane of each second cut.

4,300,580
HAIR GROOMING METHOD USING LINEAR POLYESTERS
George J. O'Neill, and Allan R. Rothwell, both of Kingsport, Tenn., assignors to Eastman Kodak Company, Rochester, N.Y.
Filed Jan. 7, 1977, Ser. No. 757,709
Int. Cl.[3] A45D *7/00;* **A61K** *7/06*
U.S. Cl. 132—7 **3 Claims**

2. Method of grooming hair comprising the steps of
(A) arranging the hair in a predetermined fashion,
(B) applying an effective amount of a polyester derived essentially from components
(1) at least one dicarboxylic acid,
(2) at least one diol, at least 20 mole percent of said diol component being a poly(ethylene glycol) having the formula

$H\text{-}(OCH_2CH_2)_n\text{-}OH$

wherein n is an integer of from two to about ten, and
(3) at least one difunctional dicarboxylic acid sulfomonomer containing a $—SO_3M$ group attached to an aromatic nucleus, wherein M is hydrogen or Na^+, Li^+, or K^+, or a combination thereof, said sulfo-monomer component constituting at least about 8 mole percent to about 45 mole percent of the sum of the moles of said components (1) and (3),
is a solution of water and alcohol to the hair, the acid components and the diol components of said polyester being substantially equimolar, and said polyester having an I.V. of at least 0.15, as measured at 25° C. using 0.25 gram of polymer per 100 ml. of a solvent composed of 60 percent phenol and 40 percent tetrachloroethane, and
(C) allowing said water and alcohol to evaporate.

4,300,581
CENTRIFUGAL WAFER PROCESSOR
Raymon F. Thompson, 137 Sherry La., Kalispell, Mont. 59901
Filed Mar. 6, 1980, Ser. No. 127,660
Int. Cl.[3] B08B *3/02*
U.S. Cl. 134—57 R **24 Claims**

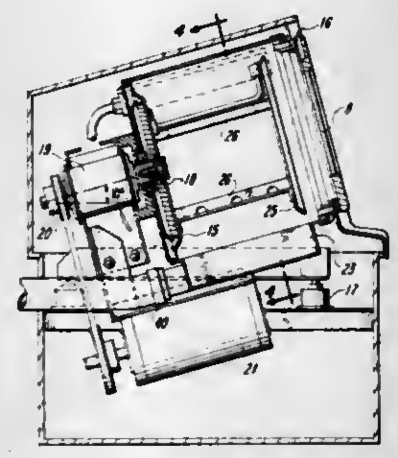

1. An apparatus for processing semiconductor wafers and glass photomask plates comprising:
a frame;
said frame containing a tub means and a drive means;
an axle means having a first end portion protruding through the center of a first end of said tub means by a seal and bearing means to prevent the escape of processing fluids; said first end portion of said axle means having a rotor means; said axle means having a second end portion;
said second end portion of said axle means having a pulley means wherein said pulley means is connected to said drive means for rotating said axle and said rotor means;
said axle means and said tub means positioned at an angle slightly greater than horizontal so that said rotor means rotates substantially about a horizontal axis without interference from said tub means;
said rotor means having a plurality of support means for receiving a carrier containing said semiconductor wafers; a support rod means connected to said rotor means and parallel to said support means for retaining said semiconductor wafers in said carrier in the inverted position at low RPM's;
said tub means having a plurality of spray member means on the upper portion of said tub means for spraying fluids for processing of said semiconductor wafers;
a drain means within the lower portion of said tub means for the removal of said processing fluids;
said tub means open at a second end opposite of said rotor means to permit easy access to said carrier containing said semiconductor wafers;
a closure means;
said closure means having an open position and a closed position;
said closure means affixed to said frame in a manner that in said closed position said closure means contacts said second end of said tub means providing a positive seal retaining all said processing fluids within said tub means;
said closure means having a vent means in the upper portion of said closure means for providing air flow into said tub means when said rotor means is operating at high RPM's aiding in the removal of said processing fluids through said drain means after the processing of semiconductor wafers.

4,300,582
STORM UMBRELLA
James G. Desarno, 420 Buttermere Ave., Interlaken, N.J. 07712
Filed Nov. 26, 1979, Ser. No. 97,319
Int. Cl.[3] A45B *25/22*
U.S. Cl. 135—20 R **6 Claims**

1. In combination with an umbrella having a center pole, a handle, a plurality of hinged radial outer ribs, and a plurality of sections of waterproof material extending between said outer ribs to form a canopy; an annular ring of flexible material; means for fastening the outer portion of said ring of flexible material continuously along the inside of the lower portions of said sections of waterproof material forming said canopy to secure said lower portions of said canopy sections and of said ribs to said ring of flexible material; a continuous ring of rope; and means for fastening said rope along the inner portion of said ring of flexible material to prevent its expanding outwardly.

4,300,583
HYDRAULIC BOOSTER VALVE
Kenneth D. Jensen, Owosso, Mich., assignor to Midland-Ross Corporation, Cleveland, Ohio
Filed Dec. 12, 1979, Ser. No. 102,882
Int. Cl.[3] F16K *31/12;* **F15B** *13/10*
U.S. Cl. 137—101 **9 Claims**

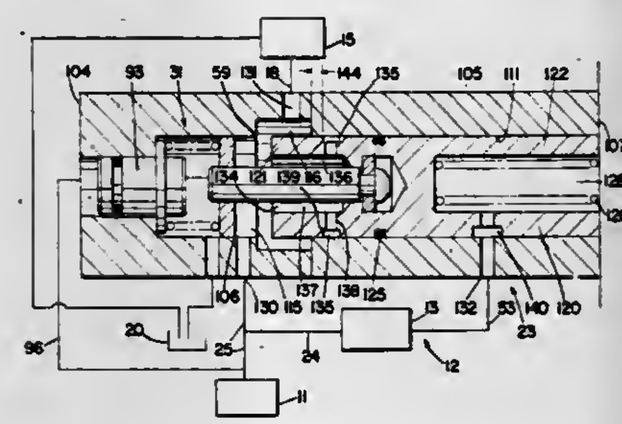

7. A gain valve of a booster for a fluid operated mechanism such as a power brake, comprising: a housing having at least three coaxially aligned communicating chambers, the second chamber between the first and third chambers having a greater diameter than the first and third chambers; a fluid inlet passageway in the first chamber and a fluid outlet passageway in the second chamber; a gain valve piston reciprocable in the third chamber and extending therefrom into the second chamber and forming with the second chamber an annular opening through which fluid passes between the passageways, the piston being capable of closing the opening as it enters the first chamber; means for biasing the piston in the direction of the first chamber; means coacting with the piston and responsive to an increase in fluid pressure in the first chamber as the piston approaches closer thereto, for limiting movement of the piston in the direction of the first chamber to prevent closure of the opening; and characterized by means for maintaining the passageways in fluid communication should the piston enter the first chamber and close the opening so that fluid is free to flow between the passageways.

4,300,584
HYDRAULIC SEQUENCE VALVE
Constantine Kosarzecki, Schaumburg, Ill., assignor to Modular Controls Corporation, Villa Park, Ill.
Continuation of Ser. No. 876,676, Feb. 10, 1978, abandoned. This application Jun. 6, 1980, Ser. No. 157,029
Int. Cl.[3] F16K *31/12;* **F15B** *11/15*
U.S. Cl. 137—106 **5 Claims**

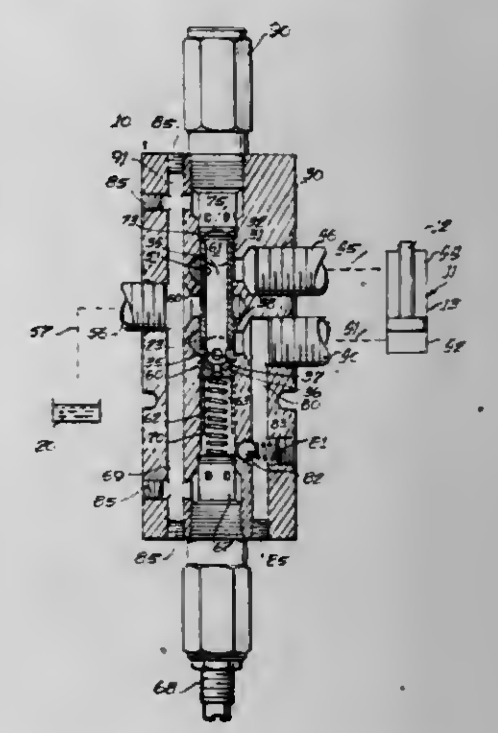

2. A hydraulic sequencing valve comprising:
a valve body defining a tank port, a pump port, and first and second line ports;
spool means slidable within the valve body between first and second positions and separating first and second chambers within the valve body, said spool means including fluid flow restricting orifice means providing fluid communication between the chambers, said spool means defining within said valve body fluid flow paths from the pump port to the second line port and from the first line port to the tank port when in its first position, and fluid flow paths from the pump port to the first line port and from the second line port to the tank port when in its second position, said spool means further defining at least one opening permitting fluid flow from the pump port into said first chamber;
biasing means for urging the spool means into its first position and returning the spool means from said second position in response to the termination of fluid flow from said pump port to the first chamber;
means including a valve element in fluid communication with said second chamber defining a fluid path from the second chamber to the tank port, said valve element being arranged to open responsive to a predetermined fluid pressure within said second chamber transmitted thereto from said first chamber through said orifice means for creating a pressure differential between said chambers for causing said spool to move from said first position to said second position;
check valve means between said second chamber and said second line port, said check valve means being arranged to open and provide fluid communication between said second chamber and said tank port through said fluid flow path from the second line port to the tank port when said spool reaches said second position for maintaining said pressure differential between said chambers for holding said spool in said second position and being arranged to

close when said spool is in said first position for preventing fluid flow from the pump port back toward said second chamber;

wherein said pump port is adapted to be coupled to a fluid pump associated with a pressure-sensitive switch for deactivating the pump upon sensing a predetermined pressure and wherein said valve body further defines a pressure switch port in communication with said first chamber and adapted to be coupled to said pressure-sensitive switch for transmitting fluid pressure within said first chamber to said switch for causing said switch to deactivate the pump for terminating the flow of fluid from said pump port to said first chamber in response to a preselected fluid pressure within said first spool chamber.

4,300,585
AUTOMATIC DUMP VALVE
Donald F. Taylor, Dallas, Tex., assignor to Sedco, Inc., Dallas, Tex.
Filed Jul. 19, 1979, Ser. No. 58,927
Int. Cl.³ G05D *7/01*
U.S. Cl. 137—107 9 Claims

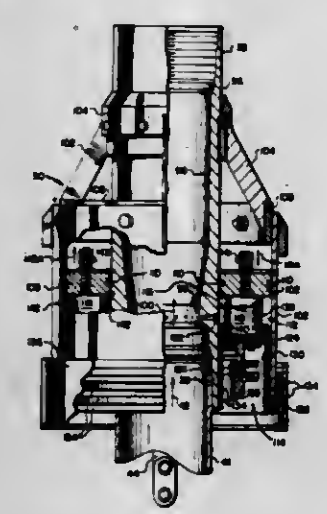

9. An automatic dump valve comprising, in combination:

an elongated tubular housing defining a longitudinally extending flow passage, said flow passage housing having a sidewall opening defining a dump port in communication with said flow passage, and a sidewall portion constricting said flow passage thereby defining a venturi flow region;

a cover plate mounted on said flow passage housing for movement from a position of sealing engagement with said dump port to an open port position; and,

a linear actuator mounted on said flow passage housing and having a piston assembly coupled in driving relation to said cover plate, said actuator being divided by said piston assembly into a first chamber in fluid communication with said venturi flow region, and a second chamber being connected in fluid communication with a fluid pressure source, said piston assembly being responsive to a first fluid pressure condition in said first chamber to drive said cover plate in a first direction to open said dump port, said piston assembly being responsive to a second fluid pressure condition in said first chamber to drive said cover plate in a second direction to close said dump port;

a deflector plate mounted within said flow passage housing and coupled to said piston assembly for movement from a clear passage position to a dump position wherein said deflector plate is extended from said dump port transversely through said flow passage thereby defining a bypass channel for diverting flow through said dump port; and,

means connected to said deflector plate and said cover plate for coordinating their movement wherein said cover plate is moved to the position of sealing engagement with said dump port as said deflector plate is moved to the clear passage position, and said cover plate is moved to the open port position as said deflector plate is moved to the dump position.

4,300,586
STABILIZER FOR STABILIZING THE GAS PRESSURE IN AN AIR BLAST CIRCUIT BREAKER
Edmond Thuries, Meyzieu; Jean-Marie Delcoustal, Bron, and Jacques Pascal, Lyons, all of France, assignors to Delle-Alsthom, Villeurbanne, France
Filed May 16, 1980, Ser. No. 150,521
Claims priority, application France, May 25, 1979, 7913323
Int. Cl.³ G05D *11/00*
U.S. Cl. 137—110 8 Claims

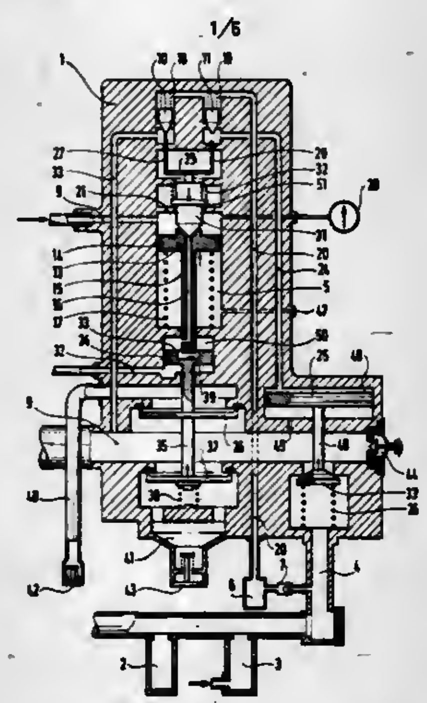

1. A gas pressure stabilizer for an air-blast circuit breaker, said stabilizer including a first passage for communicating a compressed gas source with the circuit breaker, a first valve disposed in the first passage to control the passage of the gas therein, said stabilizer further including: first means communicating with the circuit breaker and being sensitive to the gas pressure therein for keeping said first valve closed when the pressure of the gas in the circuit breaker is higher than a first predetermined value P_1, P_1 being lower than the pressure of the gas which comes from the source, and for keeping the first valve open when the pressure of the gas in the circuit breaker is lower than P_1; a second passage for communicating the circuit breaker with atmospheric air; a second valve disposed in the second passage to control the passing of the gas in said second passage; and second means communicating with the circuit breaker and being sensitive to the pressure of the gas therein for keeping the second valve closed when the pressure of the gas in the circuit breaker is lower than a second predetermined value P_2, P_2 being higher than P_1, and for keeping the second valve open when the pressure of the gas in the circuit breaker is higher than P_2, said first means including a first cylinder having opposed first and second plane surfaces, a first piston provided within said first cylinder and having an axial rod which passes through said first plane surface of said first cylinder and dividing said first cylinder into two parts, a first part located on the side nearest the first plane surface and a second part located on the side nearest the second plane surface of the first cylinder, said second part communicating by a first duct with the internal volume of the circuit breaker, said first means including first resilient means disposed in said first part and exerting on said first piston a bias pressure which opposes the pressure of the gas with which the second part is filled, so that the position of the first piston in the first cylinder depends on the pressure of the gas in the circuit breaker, and a transmission unit actuated by the first piston and capable of opening the first valve when the first piston is located in the first cylinder between the second plane surface and the first position which corresponds to a pressure P_1 of the gas in the circuit breaker.

4,300,587
RELIEF VALVE
John C. Daeschner, Torrance, Calif., assignor to The Garrett Corporation, Los Angeles, Calif.
Filed Nov. 30, 1979, Ser. No. 99,070
Int. Cl.³ G05D *11/00*
U.S. Cl. 137—117 25 Claims

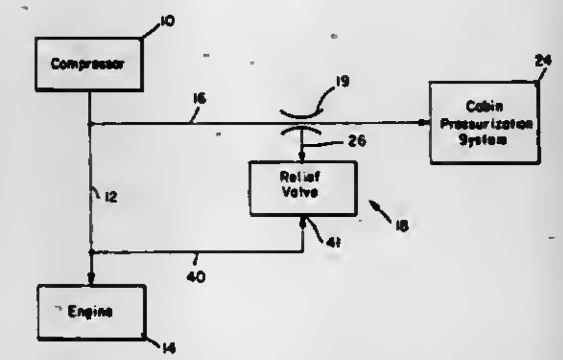

1. A pressure relief valve for limiting the discharge pressure of a compressor to a predetermined value, said valve comprising:

a. pressure differential responsive means for relieving compressor discharge pressure when the pressure differential exceeds a predetermined value;

b. first means for forming a first flowpath communicating the compressor discharge pressure to one side of said pressure differential responsive means and to a first point of use;

c. second means for forming a second flow path for compressor discharge pressure to a second point of use and including a venturi along the second flow path; and

d. third means for communicating throat pressure from the venturi to the other side of said pressure differential responsive means so that said pressure differential responsive means responds to the differential between compressor discharge pressure and venturi throat pressure to relieve compressor discharge pressure.

4,300,588
STEAM TRAP WITH SPHERICAL INVERTED BUCKET FLOAT
Katsuji Fujiwara, Kakogawa; Osamu Miyata, Hyogo, and Tadashi Oike, Kasai, all of Japan, assignors to TLV Co., Ltd., Tokyo, Japan
Filed Feb. 7, 1980, Ser. No. 119,491
Claims priority, application Japan, Feb. 17, 1979, 54-17724; Apr. 18, 1979, 54-48438; Apr. 27, 1979, 54-52799
Int. Cl.³ F16T *1/30*
U.S. Cl. 137—185 5 Claims

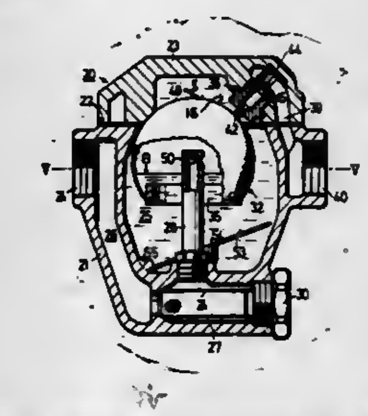

5. A steam trap assembly comprising: a casing defining a valve chamber therein; inlet means for introducing fluid generally consisting of condensate and steam into said chamber; outlet means defining an outlet passage for discharging condensate from said chamber, said outlet means including means defining a valve seat located on the interior of said chamber; a free-floating inverted bucket-type float unconnected by any mechanical means with any part of said assembly so as to be freely movable within said valve chamber, said float having an outer surface portion adapted to engage and disengage said valve seat for opening and closing said outlet passage; said float being structured as a hollow shell member defining a downwardly directed opening with a generally continuous body having a substantially spherical configuration; and means on said float imparting to said float a weight characteristic tending to bias the center of gravity thereof toward said opening to maintain the stability of said float without need for mechanical guidance or restraint.

4,300,589
AUTOMOBILE WHEEL CYLINDER LEAK DAMAGE PREVENTION
Duane V. Wold, 7178 Tranquility Dr., Sacramento, Calif. 95823
Filed Oct. 1, 1979, Ser. No. 80,244
Int. Cl.³ F16K *23/00*
U.S. Cl. 137—312 2 Claims

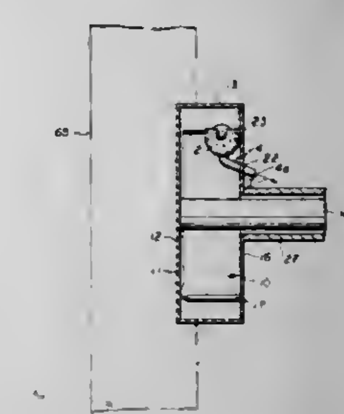

1. A device for draining leaking brake fluid from the interior of a brake drum in hydraulic brake system for a motor vehicle having brake shoes and a wheel cylinder for actuating said brake shoes comprising, in combination, a catch basin disposed in underlying relationship with said wheel cylinder for collecting said brake fluid leaking from said cylinder, means for supporting said catch basin in said underlying relationship with said cylinder and an exit tube connected to the bottom of said catch basin, said exit tube having an outlet end disposed exteriorly of said brake drum interior for discharging the brake fluid collected in said catch basin to the exterior of said drum thereby avoiding contamination to said brake shoes and drum and wherein said wheel cylinder is of a cylindrical configuration and wherein said catch basin comprises a body of arcuate cross-sectional shape having end walls at each end so as to partially surround said wheel cylinder.

4,300,590
LIQUEFIED GAS OVERCHARGE PREVENTION DEVICE
Mitsuo Morizumi, and Masahiro Kawahata, both of Yokohama, Japan, assignors to Nissan Motor Co., Ltd., Yokohama and Katakura Chikkarin Co., Tokyo, both of, Japan
Filed May 22, 1980, Ser. No. 152,236
Claims priority, application Japan, May 31, 1979, 54-72417[U]
Int. Cl.³ F16K *31/34*
U.S. Cl. 137—413 5 Claims

1. An automatic liquefied gas overcharge prevention device for installing within an enclosed tank, comprising:

(a) a valve case having:

(1) a supply passage to supply a liquefied gas;

(2) an inlet port connected to said supply passage, to which a supply pipe is attached to supply the gas from a gas source;

(3) an outlet port connected to said supply passage, from which the gas is supplied into the enclosed tank; and

(4) a poppet port communicating between the supply passage and a gasified space within the enclosed tank,

(b) a float being movable up and down in response to changes in the level of the supplied liquefied gas;

(c) a poppet valve element for opening or closing the poppet port in response to the position of said float;

(d) a float valve element having an orifice therein for opening and closing the outlet port in response to a pressure differential across the orifice created by pressurized gas flowing therethrough and through the poppet port and in

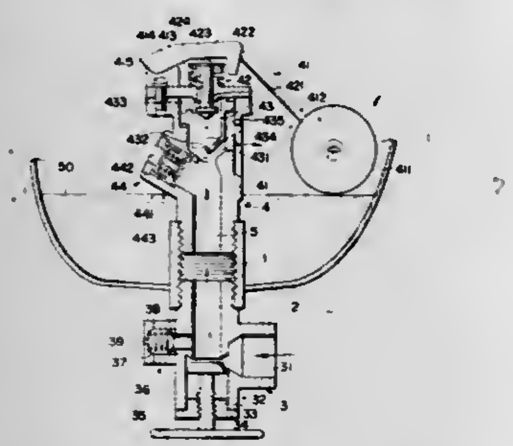

accordance with an area difference between the upper and lower surfaces thereof;

(e) a first relief valve for relieving an excessive pressure from within the enclosed tank to within the supply passage;

(f) a second relief valve for relieving an excessive pressure from within the supply passage to outside the device,

whereby a liquefied gas can be supplied from the inlet port, through the supply passage and the outlet port, to within the enclosed tank, and regulated when the pressure in the tank increases beyond a predetermined level, an excessive pressure within the tank or within the supply passage being relieved through the first and second relief valves, thus regulating the gas pressure within the tank.

4,300,591

ANTI-CAVITATION AND OVERLOAD RELIEF VALVE FOR A HYDRAULIC SYSTEM

Gary W. Sutton, Kalamazoo, Mich., assignor to General Signal Corporation, Stamford, Conn.

Continuation-in-part of Ser. No. 879,026, Feb. 17, 1978, Pat. No. 4,210,170. This application Jan. 31, 1980, Ser. No. 117,408

Int. Cl.³ F16K ***17/18***

U.S. Cl. 137—493.4 7 Claims

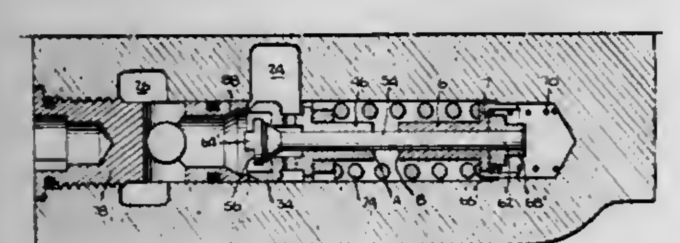

1. In a hydraulic valve having a housing; a first chamber within said housing, adapted to be communicated with a fluid line; a second within said housing, adapted to be communicated with a fluid reservoir; a fluid passageway within said housing connecting said first and second chambers; a movable valve assembly positioned within said fluid passageway for operating in a first mode to block fluid flow between said first and second chambers, for operating in a second mode to permit fluid flow from said first chamber to said second chamber only when the pressure in said first chamber exceeds the pressure in said second chamber by a first predetermined amount, and for operating in a third mode to permit fluid flow from said second chamber to said first chamber only when the pressure in said second chamber exceeds the pressure in said first chamber by a second predetermined amount, said valve having a stationary portion positioned within said fluid passageway between said first and second chambers, said stationary portion including a valve seat; said movable valve assembly including a movable valve element having a sealing portion for engaging said valve seat of said stationary portion when said movable valve assembly is operating in said first and second modes, said movable valve assembly further having a valve seat, and a poppet mechanism for sealingly engaging said valve seat of said movable element when said movable valve assembly is operating in said first and third modes, said poppet mechanism including a poppet having a head located at one end thereof, a body portion adjacent said head, a tapered sealing portion adjacent said body portion for sealingly engaging said valve seat of said movable valve element, a stem adjacent said tapered sealing portion, a first spring seat having a radial portion projecting from the stem of said poppet and an axial body portion means extending in the direction of the stem for engaging the movable valve element in order to limit the travel thereof in said third mode when said movable valve means moves relative to said poppet mechanism.

4,300,592

PRESSURE REGULATOR

E. Dale Hartley, 1706 Decker Rd., Malibu, Calif. 90265

Filed Sep. 27, 1976, Ser. No. 726,526

Int. Cl.³ F16K ***31/12***

U.S. Cl. 137—505.25 10 Claims

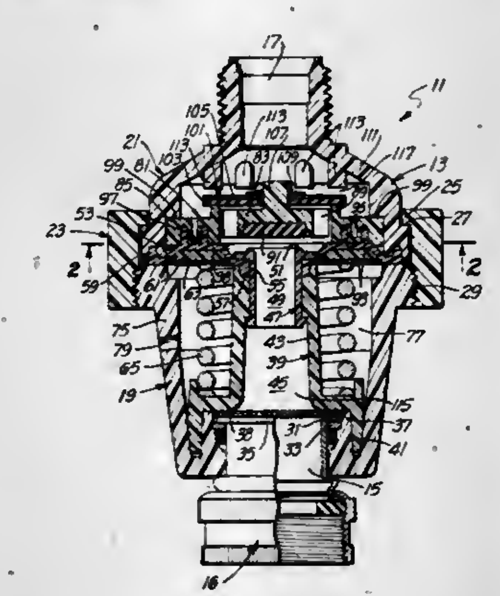

1. A pressure regulator comprising:

a housing having an inlet connectible to a source of fluid at inlet pressure, an outlet and a flow passage extending between the inlet and the outlet;

a tubular wall in said housing defining a portion of said flow passage;

a valve seat mounted on said housing in said flow passage, a region of said flow passage downstream of said valve seat being a regulated pressure chamber;

a valve element;

a flexible diaphragm extending between said tubular wall and said housing and being movable generally axially of said housing;

means for mounting said valve element in the regulated pressure chamber and on said flexible diaphragm for movement of the valve element between a closed position in which the valve element engages the valve seat to block flow through the flow passage and an open position in which the valve element does not block flow through the flow passage, the pressure of the fluid in the regulated pressure chamber being regulated pressure and said regulated pressure urging the valve element toward the closed position;

spring means for resiliently urging the diaphragm toward the regulated pressure chamber and the valve element toward the open position; and

said valve element mounting means including at least one generally axially extending projection and at least one generally axially extending recess on said diaphragm and said valve element, said projection being received in said recess whereby the regulated pressure and the spring means cooperate to tend to hold the projection in the recess.

4,300,593

BACK PRESSURE REGULATOR AND NON-RETURN VALVE

Robert A. Ritter, c/o 3427 - 12 St., N.E., Calgary, Alberta, Canada (T2E 6S6)

Filed Jan. 31, 1980, Ser. No. 117,226

Claims priority, application Canada, Jan. 4, 1980, 343085

Int. Cl.³ F16K ***15/14***

U.S. Cl. 137—512.15 6 Claims

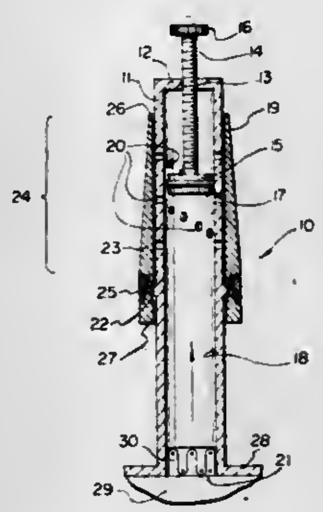

1. A back pressure regulator and non-return valve comprising:

(1) a hollow plug having an open inlet end and one closed end, said closed end having a central aperture therethrough;

(2) a closure cap hermetically slidably disposed within said hollow plug, said closure cap having an extending rod disposed through said central aperture, said closure cap being adapted to be selectively positioned along the length of, and within, said hollow plug by movement of said rod;

(3) a plurality of outlet perforations from said hollow plug, said perforations being disposed along at least one helical path along the outer periphery thereof, to provide a combined outflow from said hollow plug;

and

(4) a tubular resilient diaphragm sleeve enveloping the perforated portion of said hollow plug, said resilient sleeve being secured to said hollow plug at its base only adjacent the open inlet end thereof, said tubular resilient diaphragm sleeve having walls whose thickness decreases gradually from the secured portion thereof to the unsecured portion thereof;

whereby

(5) control of the combined outflow through an annular outflow path between said tubular resilient diaphragm and said hollow plug to require greater gaseous pressure is provided by longitudinal movement of said closure cap, by longitudinal movement of said extending rod thereby to change the effective length of said hollow plug, to alter the number of said outlet perforations in said effective outlet length of said hollow plug and to provide greater wall thickness of the diaphragm at the effective length of said outlet plug remaining, and thereby to increase the threshold gaseous pressure required to move the thicker portions of the diaphragm away from the hollow plug to provide the annular outflow path.

4,300,594

HYDRAULIC ROTARY DISTRIBUTOR, PARTICULARLY FOR POWER STEERING MECHANISMS

Juan S. Bacardit, Barcelona, Spain, assignor to Bendiberica S.A., Barcelona, Spain

Filed Jul. 9, 1979, Ser. No. 55,931

Claims priority, application Spain, Jul. 27, 1978, 472.087

Int. Cl.³ F15B ***9/10***

U.S. Cl. 137—625.21 4 Claims

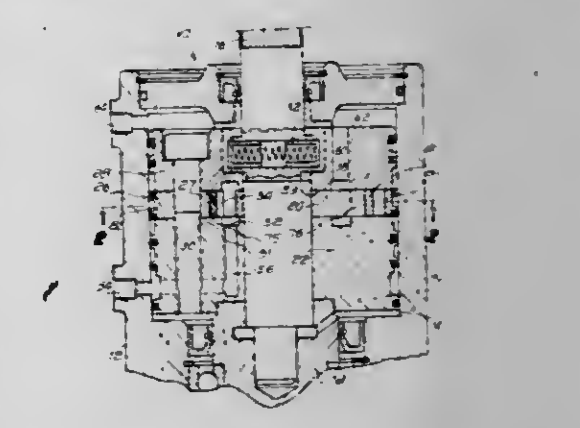

1. A hydraulic rotary distributor for power-assisted steering gear comprising a first rotary member solid in rotation with an input shaft, and a second rotary member solid in rotation with an output shaft, the said first and second rotary members forming between them fluid passages intended to control the fluid flow between a pressure source and at least one compartment of a power-assistance motor as a function of the relative angular position of said first and second rotary members, said distributor further comprising locking means responsive to a control pressure so as to prevent the relative rotation between said first and second rotary members from a non-operating position in response to the application of a torque to the input shaft, until said torque applied to the input shaft is greater than a predetermined value, one of the rotary members comprising an external cylindrical surface sealingly cooperating with an internal cylindrical surface on the other rotary member, said locking means comprising at least one ball or roller member radially urged towards the bottom of a notch defined in the said external cylindrical surface under the influence of the control pressure acting on a pressure-responsive member movably carried by the other of said rotary members, said pressure-responsive member defining a notch confronting the notch on said one rotary member and said notches receiving said ball or roller member.

4,300,595

SOLENOID CONTROL VALVE

Endre A. Mayer, Birmingham, and Charles R. Kelso, Farmington Hills, both of Mich., assignors to The Bendix Corporation, Southfield, Mich.

Filed Nov. 28, 1979, Ser. No. 98,269

Int. Cl.³ F16K ***31/06, 1/34***

U.S. Cl. 137—625.33 6 Claims

1. A valve responsive to command signals for controlling the flow of fluid therethrough comprising:

a housing in communication with a source of the fluid having a first port and a first passage extending therethrough;

first means for reciprocally moving within the first passage;

flow splitting means situated in the first passage for dividing the flow of fluid into a plurality of flow paths wherein said flow splitting means comprises a valve seat including a first surface and a parallel spaced second surface and further has located in the first surface a first plurality of radially spaced grooves partially extending therethrough, and includes on the second surface a coaxially situated annular groove intersecting the inner portion of each of the plurality of grooves; and

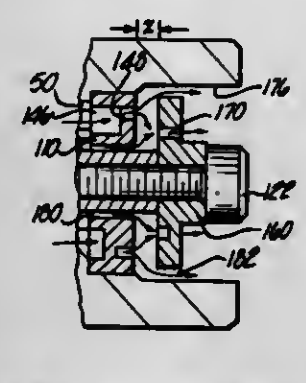

sealing means loosely received within the passage and spaced from the flow splitting means for selectively sealing the flow through the flow splitting means in correspondence with the motion of the first means, wherein said sealing means comprises a valve seat operatively connected to and movable with the first means and has an upper surface thereon for providing a fluid tight seal against the second surface of the valve seat for permitting fluid to flow through the first plurality of grooves in correspondence with the motion of the first means.

4,300,596

ADJUSTABLE PARALLEL FLUIDIC RESISTOR BANK

John F. Burke, Huntsville, Ala., assignor to The United States of America as represented by the Secretary of the Army, Washington, D.C.

Filed Aug. 30, 1979, Ser. No. 70,772

Int. Cl.³ F15C *1/14;* F15D *1/00*

U.S. Cl. 137—836 5 Claims

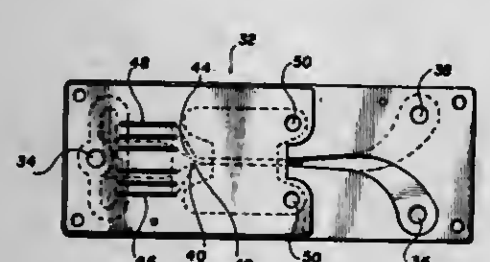

1. A permanently adjustable fluidic resistor module comprising:

a body member;

input means for inputting a fluid flow to said body member;

output means for outputting a fluid flow from said body member;

a plurality of fluidic resistor channel means connected in parallel between said input means and said output means, said channel means situated side by side within said body member, each of said plurality of channel means separated from an adjacent channel means by a first portion of said body member; and

a second portion of said body member adjacent to said channel means comprising a material capable of plastic deformation in response to a stress applied thereto, said body member comprising:

a first exterior plate;

a middle plate joined to said first exterior plate;

a second exterior plate, formed of a material capable of plastic deformation, having an inner surface and an outer surface, said inner surface having grooves thereon;

wherein said resistor channel means are formed by joining said inner surface of said second exterior plate to said middle plate; and

wherein said first exterior plate, said middle plate and said second exterior plate each have channel means for cooperatively providing a continuous path from said inlet means, to said resistor channel means and then to said outlet means; whereby the resistance of said resistor module may be permanently adjusted by deforming said material and thus the cross section of selected ones of said channel means.

4,300,597

DUST COVER ASSEMBLY FOR QUICK DISCONNECT COUPLING

Duane M. Delay, Sr., Lincoln, Nebr., assignor to Gould Inc., Rolling Meadows, Ill.

Filed May 17, 1979, Ser. No. 39,855

Int. Cl.³ B65D *51/18;* F16L *55/10*

U.S. Cl. 138—89 5 Claims

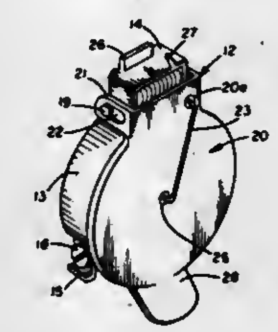

1. A dust cover assembly for a relatively elongated, generally cylindrical open-ended conduit comprising: a clamping member for mounting said assembly encircling said conduit adjacent said open-end; a cover member equipped with an indention generally aligned with the axis of said conduit; pivot means cooperatively interconnecting said clamping member and said cover member, said pivot means including a pair of transversely spaced-apart ears on one member, said ears each having a longitudinally elongated pivot opening, and the other member having a pivot shaft outside said cylindrical conduit and extending transversely to the axis of said conduit, said pivot shaft being slidably pivotally mounted in said pivot openings so that the cover member is rotatable with respect to the clamping member about two mutually perpendicular axes and the cover member will align with and effectively close the open end of the conduit when the cover member is in a closed position relative to said open end; and a spring having one end engaging said clamping member and another end being received in said indention of said cover member urging said cover member into a closed position relative to said open end, said clamping member being equipped with a recess for accommodating said spring when said cover member is pivoted to an open position.

4,300,598

TUBULAR STEEL MEMBERS FOR UNDERWATER PIPELINES

Alain L. A. Royer, Vandoeuvre les Nancy; Jean-Claude B. Roques, Fumel, and Bernard J. L. Dumas, Nancy, all of France, assignors to Pont-A-Mousson S.A., Nancy, France

Filed Jun. 12, 1979, Ser. No. 47,963

Claims priority, application France, Jun. 13, 1978, 78 17865

Int. Cl.³ F16L *9/22;* C22C *38/04*

U.S. Cl. 138—177 3 Claims

1. In a tubular stiffening member for arresting the spread of buckling waves and cracks in pipes of an underwater pipeline to which it is fitted by welding having a substantially increased thickness with respect to that of the standard part of a pipe, the

improvement comprising, the member being of one-piece construction, the member being constructed of a lightly alloyed low carbon weldable steel, said member being centrifugally cast and having a ferritic structure with stable carbides, said lightly alloyed low carbon weldable steel comprises as a per-

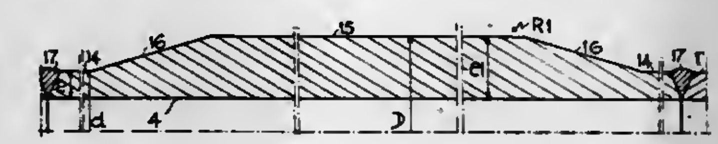

centage by weight, in addition to iron, at the most 0.08% carbon, at the most 0.30% silicon, manganese between 1.20 and 2.20%, at least one metal generating special carbide such as molybdenum between 0.20 and 0.50% and, after thermal treatment, a homogeneous ferritic structure with fine grains containing stable carbides homogeneously dispersed in the ferrite.

4,300,599

WARP DETECTION SYSTEM

Karl W. Woeger, Wakefield, R.I., assignor to Leesona Corporation, Warwick, R.I.

Filed Jan. 4, 1980, Ser. No. 109,602

Int. Cl.³ D03D *51/20;* G01N *21/18*

U.S. Cl. 139—352 8 Claims

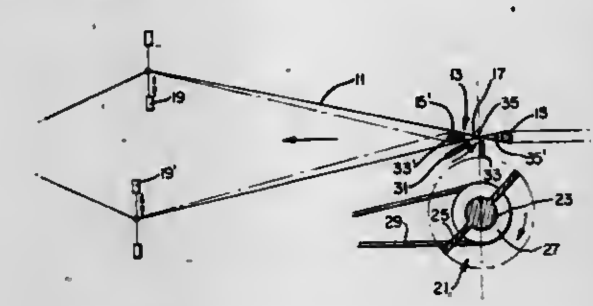

1. In a loom in which warp threads are delivered to a weaving zone in a generally planar array in two interspersed groups via a leasing zone formed by a pair of lease rods with the threads in the respective groups winding over and under said rods to define a warp cross point intermediate said rods, an improved system for detecting loss of tension in individual warp threads due to breakage and the like, which comprises: means for creating a narrow beam of light passing across the warp array in proximity to one of its sides along a locus generally within the limits of said leasing zone, a rotatable fan blade on the other side of said warp array operable when rotated to generate a flow of air directed generally against the portion of the threads within said leasing zone to displace any relatively untensioned warp threads into the path of said light beam to instantaneously intercept said beam converging air flow-guides between said blade and said cross point for directing the air flow from said rotating blade toward said leasing zone, and light beam receiving means for detecting said instantaneous interception of said light beam due to said thread displacement and providing a control signal in response thereto.

4,300,600

METHOD AND APPARATUS FOR FILLING SACKS WITH AN AMOUNT OF POURABLE MATERIAL DETERMINED BY THEIR WEIGHT

Konrad Tetenborg, Lengerich, and Hermann Oelrich, Ladbergen, both of Fed. Rep. of Germany, assignors to Windmoller & Holscher, Lengerich, Fed. Rep. of Germany

Filed Nov. 20, 1979, Ser. No. 96,214

Claims priority, application Fed. Rep. of Germany, Nov. 22, 1978, 2850668

Int. Cl.³ B65B *1/32*

U.S. Cl. 141—10 6 Claims

1. A method of filling sacks with a first predetermined weight of material comprising:

gripping and suspending an opened sack from a sack holder;

applying a force to the sack holder so that the gripped sack is held spaced from and above a support surface of a weighing apparatus;

introducing pourable material into the sack at a first feed rate so that the sack holder is moved against the applied force by the weight of material in the suspended sack to position the sack holder on the support surface of the weighing apparatus;

weighing the sack after its positioning on the support surface and introducing pourable material into the sack at a second feed rate;

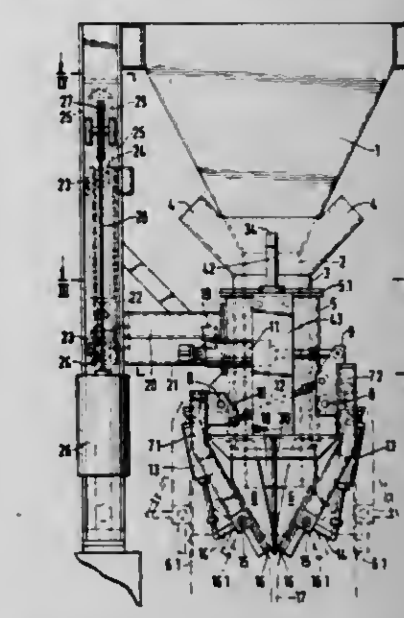

moving the sack holder towards the support surface when the sack weight reaches a second predetermined weight less than said first predetermined weight so that upper portions of the sack walls are relaxed whereby the applied force does not effect the measured weight and the entire weight of the sack and its contents are supported by the support surface; and

introducing pourable material into the sack at a feed rate less than said second feed rate until the weighing apparatus indicates the first predetermined weight has been reached.

4,300,601

VACUUM VALVE AND MONITORING SYSTEM

Hy Stelnberg, 7200 NW. 78th St., Tamarac, Fla. 33319

Filed Nov. 19, 1979, Ser. No. 95,215

Int. Cl.³ B67D *5/32*

U.S. Cl. 141—94 5 Claims

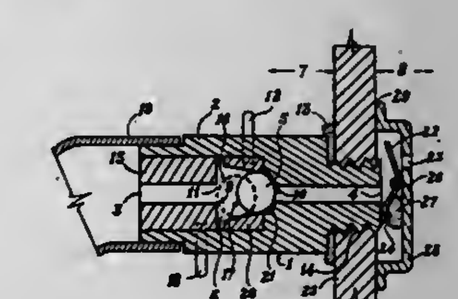

4. In an evacuated, flat-plate solar collector, including an airtight outer frame wherein a space within the frame is substantially evacuated, the improvement for preventing the loss of vacuum within said space which permits the evacuation of said space, in the event of loss of vacuum, comprising:

a vacuum monitoring and pumping system;

a pressure-indicating, electrically-operated sensor connected to said frame and said vacuum monitoring and pumping system;

an airtight hose connected at one end to said frame and at the

other end connected to said vacuum monitoring and pumping system whereby said system is activated by said sensor to evacuate said frame upon the loss of vacuum within said frame.

4,300,602
NO POUCH - NO FILL APPARATUS WITH MEMORY SYSTEM
Leslie Vadas, Los Gatos, Calif., assignor to FMC Corporation, Chicago, Ill.
Filed Jan. 24, 1980, Ser. No. 110,651
Int. Cl.³ B65B *3/04, 57/06*
U.S. Cl. 141—103 **17 Claims**

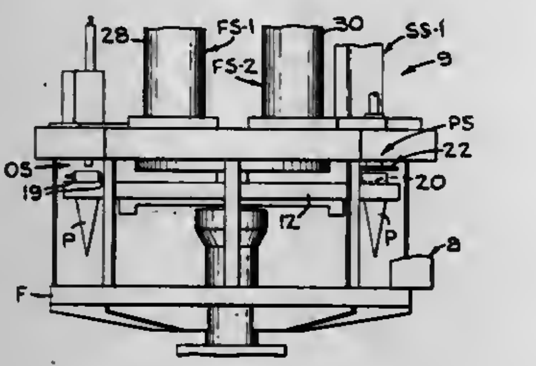

1. In a pouch opening and filling machine having two filling valves, the combination of a no pouch—no fill mechanism and memory system: the combination comprising pouch supporting means for cyclically moving a pouch from a pouch opening station sequentially into two spaced filling stations in positions to first receive a product from one filling valve and to thereafter receive a product from another filling valve; means for gripping and opening pouches when at said opening station; pouch detecting means associated with said gripping means for detecting the presence of a properly opened pouch, and for detecting the absence of a pouch or the presence of an improperly opened pouch; and memory means responsive to said pouch detecting means for sequentially preventing opening of said two filling valves when said pouch supporting means is in said two filling stations and no pouch is present or an improperly opened pouch is in said filling stations.

4,300,603
ANTIDRIP VOLUMETRIC RAPID FILLING MACHINE USABLE WITH VERY VISCOUS SUBSTANCES
Herman Laub, III, 244 N. San Marino, San Gabriel, Calif. 91775
Filed Apr. 11, 1980, Ser. No. 139,256
Int. Cl.³ B65B *3/12*
U.S. Cl. 141—258 **12 Claims**

1. A system for filling a container with flowable substance from a source thereof, comprising:
means defining a flow path for passage of such substance from such a source toward such a container;
a dispensing nozzle, connected to receive such substance from such source along the flow path, for discharging such substance into such container;
a volumetric cylinder connected along the flow path upstream of the nozzle, and a biacting piston within the cylinder, adapted to premeasure the volume of such substance discharged along the flow path from such source into such container;
control means, connected to control the direction of action of the piston;
a mounting member fixed with respect to the cylinder;
control-signal means, carried on the mounting member for adjustment with respect to the piston, and adapted and operatively connected to respond to the piston by providing a signal to the control means to reverse the piston;
a positive mechanical stop, also carried on the mounting member for adjustment in common with the control-signal means, for halting the piston; and

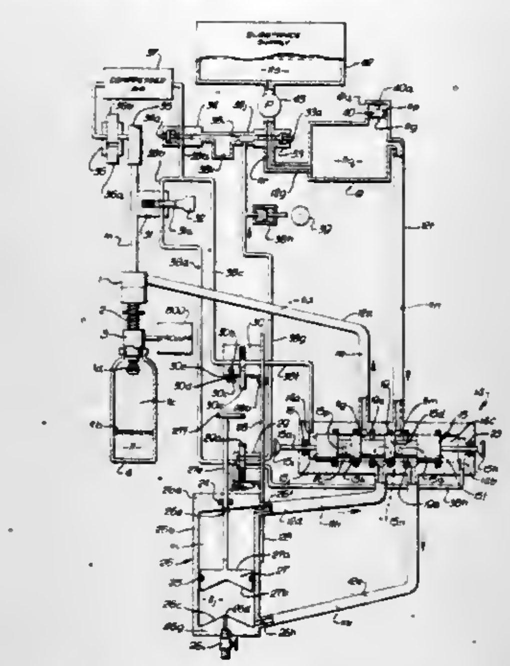

means, also carried on the mounting member with the positive mechanical stop and control-signal means, for effecting a relative adjustment of the positive mechanical stop and the control-signal means.

4,300,604
SYSTEM TO PRODUCE WOOD PRODUCTS FROM PEELER CORE LOGS
Edwin H. Zimmerman, R.D. #1, New Holland, Pa. 17557
Filed May 12, 1980, Ser. No. 148,765
Int. Cl.³ B27C *9/04*
U.S. Cl. 144—41 **5 Claims**

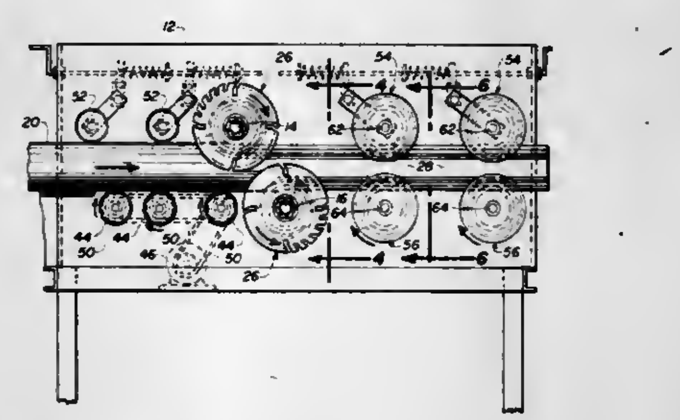

1. A saw and chipping device to convert veneer peeler core logs into useful boards of a dimension to produce maximum useful products and minimum waste comprising in combination, a pair of parallel arbors and power means to rotate the same in opposite directions, said arbors respectively being above and below a longitudinal path along which said logs travel, similar sets of alternate saws and chippers keyed respectively to said arbors, the diameters of said saws being selected to cut slightly more than half the diameter of said logs and one set trailing the other a predetermined distance and similar saws of said sets being in common planes perpendicular to said arbors, whereby said sets of saws cooperate to make complete cuts through said logs, and said sets of saws having said chippers therebetween which progressively increase in diameter respectively from the mid portion of each set of blades toward the opposite ends of said sets and the tips of said chippers being shaped to produce desired finished opposite edges on the assembly of boards sawed simultaneously by said saws of maximum varying widths according to the section of the logs sawed by said saws and the shape of said boards being selected by the number of saws and diameter of chippers to maximize useful boards and minimize edge waste, feed rollers upstream from said sets of saws and chippers to guide peeler logs to and through said sets of saws and chippers, and at least one pair of auxiliary guide rollers downstream from said saws and chippers and comparable in width to the same and respectively above and below the sawed boards and provided with circular surfaces increasing in diameter from the center toward the opposite ends and substantially complementary to the opposite edges of the sawed board assemblies to support and guide the same in discharging direction from said saws and chippers.

4,300,605
LOG SPLITTER WITH PROTECTION AGAINST TWISTING MOMENTS
Michel A. Pierrat, 48 Farrwood Dr., Andover, Mass. 01810
Continuation-in-part of Ser. No. 873,060, Jan. 27, 1978, abandoned. This application Jan. 2, 1980, Ser. No. 109,134
Int. Cl.³ B27L *7/00*
U.S. Cl. 144—193 A **15 Claims**

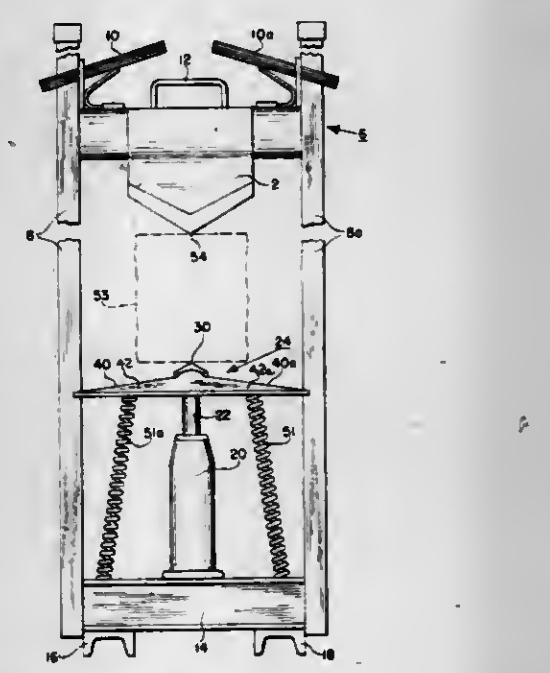

11. In a log splitter having
first and second vertical frame members,
support means retaining said frame members in spaced parallel relationship, and
a carriage supported by said frame members and having a splitting wedge adapted to engage the upper end of a vertically-positioned log to be split,
the improvement comprising
a ram guide extending between said frame members and adapted to engage the lower end of said log at a point opposite said wedge,
guide means at at least one end of said ram guide and arranged to cooperate with two opposing surfaces of the respective frame member to direct the movement of said ram guide along a path parallel with said frame members, said guide means defining means for releasing said ram guide from such directed movement when the angle of tilt of the said ram guide with respect to said frame members exceeds the predetermined angle, and
a hydraulic jack having a ram tiltably engaging said ram guide for producing relative closing movemeot between said ram guide and said wedge, and
a base supporting said jack and forming part of said support means.

4,300,606
WOOD SPLITTING AXE
Johnny R. Branson, P.O. Box 124, Blocksburg, Calif. 95414
Continuation of Ser. No. 8,864, Feb. 2, 1979, abandoned. This application Apr. 21, 1980, Ser. No. 142,099
Int. Cl.³ B26B *23/00*
U.S. Cl. 145—2 R **3 Claims**

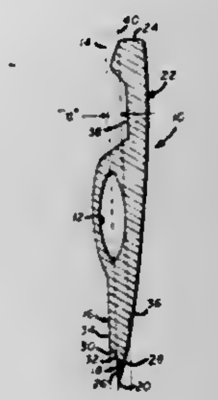

1. A wood splitting axe head for mounting on an axe handle comprising:
an elongated axe head having at the very least two converging faces forming a cutting edge at the intersection thereof, said cutting edge defining an edge plane in the direction of elongation;
stop means formed on one face only a predetermined distance from said cutting edge and on one side of said edge plane;
the center of gravity of said axe head lying above said stop means in the direction away from said cutting edge and in a gravity plane in the direction of elongation which is spaced from and parallel to said edge plane and located on that side of said edge plane opposite said stop means; and
said stop means and said center of gravity cooperating during the end of the swing to produce a turning motion of said axe head to convert the remaining impact force into a rotary motion after impact, thereby facilitating the splitting of wood.

4,300,607
VARIABLE LENGTH TOOL HANDLE
Ralph D. Mellinger, 1305 Hillsway Ct., Baltimore, Md. 21234
Filed Mar. 7, 1980, Ser. No. 128,255
Int. Cl.³ B25G *1/08*
U.S. Cl. 145—62 **5 Claims**

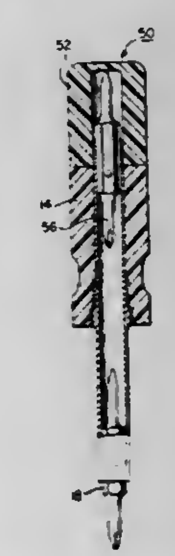

1. A segmented handle of variable length which is characterized by:
(a) an upper gripping member having a opening which partially extends longitudinally therethrough whereby the opening is dimensioned and configured to accomodate a

chuck and cooperate with releasable retention means disposed on the chuck;
(b) at least one lower gripping member
(i) positioned adjacent to the upper gripping member, and
(ii) having an opening extending longitudinally therethrough whereby a shaft may be inserted into the opening in the lower gripping member and communicate with the upper gripping member;
(c) a hollow shaft dimensioned and configured
(i) for receiving a chuck at either end and cooperating with releasable retention means on the chuck, and
(ii) to be received by the opening in the lower gripping member;
(d) a means for preventing rotational slippage of the hollow shaft in relation to the lower gripping member;
(e) at least one chuck dimensioned and configured to be received both within one end of the hollow shaft and the upper gripping member; and
(f) a means disposed on the chuck for releasably retaining the chuck within the shaft and the upper gripping member;
thereby providing a secure connection between the combined gripping members and the shaft when the chuck is inserted into both the one end of the shaft surrounded by the lower gripping member and into the opening in the upper gripping member, and also permitting a secure connection between the chuck and the upper gripping member alone.

4,300,608
SELF-RAISING STRAP LOOP
Bruce Cuthbertson, Macon, Ga., assignor to Bonar Industries Inc., Macon, Ga.
Filed May 7, 1980, Ser. No. 147,392
Int. Cl.³ A45C *13/26*; B65D *33/06*
U.S. Cl. 150—12 38 Claims

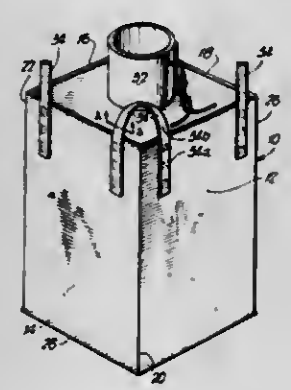

1. A self-raising strap loop for a stackable, flexible container subjectable to lifting forces, comprising a flexible strap member connectable at each end thereof to said container, with a bight portion defined between the ends and resilient means associated with said bight portion over a substantial portion of the length thereof, whereby when connected to a container and subjected to stacking forces said resilient means will permit said loop to flex so as to lie substantially flat on said container and, when such stacking forces are released, said resilient means will cause said loop to raise to an upstanding position to accept a lifting member therein.

4,300,609
INTERCHANGABLE AND REUSABLE HANDBAG KIT
Aurora A. Sturgeon, 3903 Fairway Dr., Cameron Park, Calif. 95682
Filed Apr. 28, 1980, Ser. No. 144,403
Int. Cl.³ A45C *13/06*
U.S. Cl. 150—29 3 Claims

1. A handbag kit comprising:
a pair of generally U-shaped frame members hinged together at the ends of the legs of said frame members;
a recess around the inside surface of each of said frame members;
a generally U-shaped retainer member having a bight and two diverging legs slidably received in each of said recesses from the open end of one of said U-shaped frame members;
means for securing the edges of a pouch around said retainer members, and

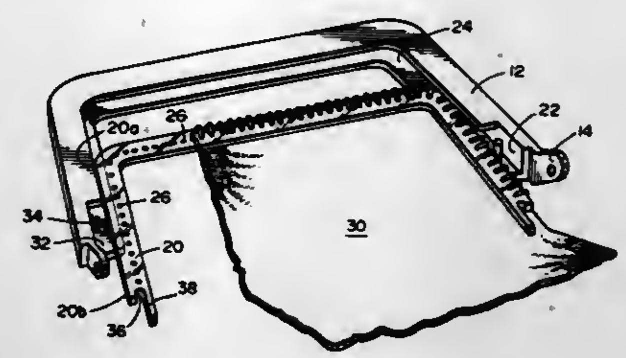

interengagable stop means on the frame members and retainer members, and the retainer members having sufficient resilience to permit flexing of the diverging legs toward each other when being inserted in said recesses and then outward springing of the legs to result in engagement of the interengageable stop means.

4,300,610
CARD-LIKE HOLDER
David B. China, Gainsville, Fla., assignor to Bermas Plastics Company, Inc., Long Island City, N.Y.
Filed Jan. 31, 1980, Ser. No. 117,094
Int. Cl.³ A45C *11/32*, *15/00*
U.S. Cl. 150—40 9 Claims

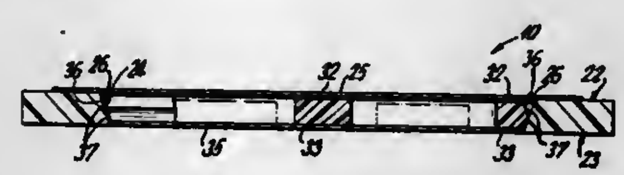

1. A reusable card-like holder for a key, coin, and/or similar item comprising:
a tray member including a rigid frame portion having a pair of opposed faces, said tray member including an aperture and a first film member disposed on one of the faces of said frame portion so as to define a backing for said frame aperture; and
an insert member conforming in configuration to that of said tray member aperture such that said insert member is removably receivable, in resistance fit relationship, within said tray member aperture, said insert member including a rigid holder portion having a pair of opposed faces, said holder portion also including an aperture for receiving said key, coin and/or similar item, said insert member further including a second film member disposed on one of the faces of said holder portion so as to define a backing for said insert member aperture and such that said item, when contained within the holder, is sandwiched between said first and second film members, said tray member and insert member being flexible such that said insert member may be readily snapped into and out of said tray member for containing or ejecting said item.

4,300,611
HAMPERS WITH IMPROVED LIFTING APPARATUS
Max Silverman, 3850 Sedgwick Ave., New York, N.Y. 10463
Division of Ser. No. 57,454, Jul. 13, 1979, Pat. No. 4,244,410.
This application Mar. 10, 1980, Ser. No. 128,724
Int. Cl.³ B65D *90/20*
U.S. Cl. 150—51 8 Claims

1. A lifting platform for use in a hamper having a rigid upper frame and a sack, the mouth of the sack mounted on the upper frame whereby the sack depends therefrom, said lifting platform comprising a platform member for insertion within the sack, rope means having one end available for connection at one side of the upper frame, the other end of the rope means available for passing over the edge of an opposing side of said

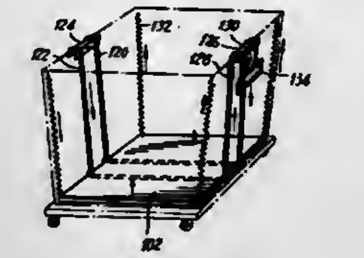

upper frame, and a portion of the rope means intermediate its ends slidably coupled across said platform member, whereby when said other end of the rope means is pulled over the frame edge, said platform member is raised towards said upper frame, and spring means acting on said platform member for upwardly biasing said platform member towards said upper frame.

4,300,612
SAFETY ENCLOSURE FOR GLASS BOTTLES CONTAINING HAZARDOUS MATERIALS
William Schroeder, Jr., North Muskegon, and Raymond N. Fink, Williamston, both of Mich., assignors to Hoffmann-La Roche Inc., Nutley, N.J.
Filed Nov. 5, 1979, Ser. No. 91,005
Int. Cl.³ B65D *23/08*
U.S. Cl. 150—52 R 6 Claims

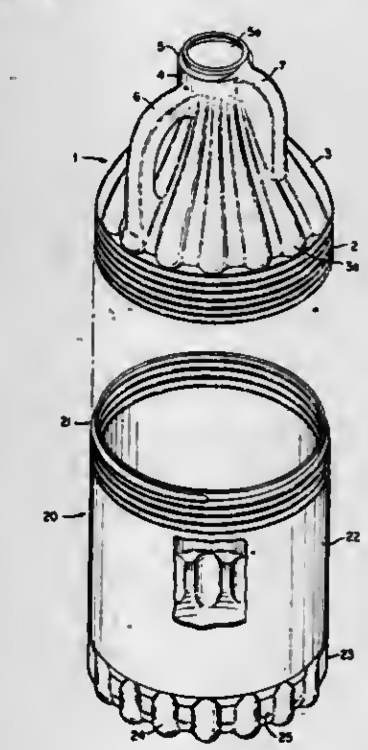

1. A container protector comprising separable top and bottom portions, each composed of a solvent and shatter resistant polymeric composition, said top and bottom portions being configured so as to conform substantially to the shape of a container to be protected, said top and bottom portions having respective cooperating means on one edge of each for separably engaging said portions such that accidental separation is prevented even under conditions of stress sufficient to damage the container, said top portion having an aperture formed in the other edge which provides access to the contents of the protected container without requiring separation on the top portion from the bottom portion, said top portion being provided with a series of rib-like protrusions longitudinally extending along the surface of the top portion from about the edge containing the separable cooperating means to the edge containing the aperture, said separable engaging means comprising thread means on said one edge of the top portion and said one edge of the bottom portion which threadably engage each other.

4,300,613
SAFETY TIRE HAVING PNEUMATIC TIRE SUPERIMPOSED ON ANNULAR CUSHION
Jerald L. Connelly, 2201 Hercules Dr., Colorado Springs, Colo. 80906
Filed Apr. 14, 1980, Ser. No. 139,801
Int. Cl.³ B60C *17/00*, *11/02*
U.S. Cl. 152—159 1 Claim

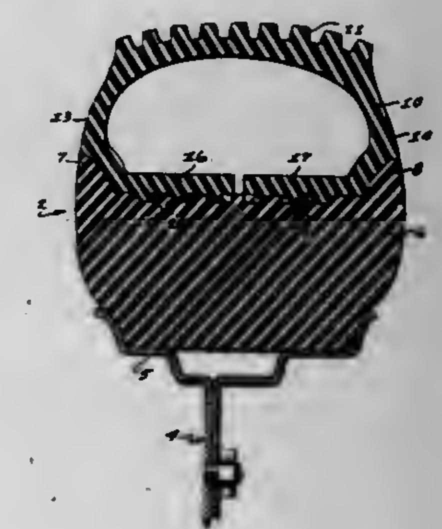

1. Combination solid and pneumatic tire for mounting on the rim of a vehicle wheel comprising:
a solid annularly shaped elastic cushion adapted to be mounted on and carried by the rim of a vehicle wheel, said cushion having at its outer periphery a pair of raised outer edges and a substantially flat circumferential midportion between said raised outer edges and wherein the said midportion has a plurality of grooves and ridges;
an inflatable tubeless tire casing having:
a tread surface,
a pair of side walls depending from the tread surface and each of said side walls having axially inwardly directed extensions providing a pair of laterally spaced apart coupling members which conform with and fit axially inside the said raised outer edges and which coupling members contain grooves and ridges to mutually mesh with the grooves and ridges in the midportion of the annular cushion.

4,300,614
PUNCTURE SEALANT FOR A TIRE
Kunio Kageyama; Shigeo Omote; Youichi Taguchi, and Hazime Yamazaki, all of Kanagawa, Japan, assignors to The Yokohama Rubber Co., Ltd., Tokyo, Japan
Continuation-in-part of Ser. No. 942,451, Sep. 14, 1978, abandoned. This application Aug. 28, 1979, Ser. No. 70,446
Claims priority, application Japan, Sep. 14, 1977, 52/109787
Int. Cl.³ B32B *25/04*; B60C *1/00*, *17/00*
U.S. Cl. 152—347 8 Claims

1. In a combination of a tire and a cured puncture sealant layer on an inner surface of said tire, the improvement comprising:
said cured puncture sealant comprising (A) a copolymer of at least one acrylate selected from the group consisting of 2-ethylhexyl acrylate and n-butyl acrylate, and at least one glycidyl monomer, the amount of said glycidyl monomer being 0.5-5 parts by weight to 100 parts by weight of said acrylate, (B) a curing agent for epoxy resin, and (C) a polymer whose solubility parameter to the copolymer is within ±0.5 in an amount up to 200 parts by weight to 100

parts by weight of said copolymer, said cured puncture sealant exhibiting an elongation at break of 500 to 2000% and a tensile strength of 0.7 to 5.0 kg/cm^2.

8. The combination comprising a sealed rubber product and a cured puncture sealant layer on an inner surface of said product, said sealant comprising (A) a copolymer of at least one acrylate selected from the group consisting of 2-ethylhexyl acrylate and n-butyl acrylate, and at least one glycidyl monomer the amount of said glycidyl monomer being 0.5–5 parts by weight to 100 parts by weight of said acrylate, (B) a curing agent for epoxy resin, and (C) a polymer whose solubility parameter to the copolymer is within ± 0.5 in an amount up to 200 parts by weight to 100 parts by weight of said copolymer, said cured puncture sealant exhibiting an elongation at break of 500 to 2000% and a tensile strength of 0.7 to 5.0 kg/cm^2.

4,300,615
FABRIC COMPOSITE AND RUBBER REINFORCED THEREWITH
Ronald W. Kavchok, Bellemead, N.J., assignor to The Goodyear Tire & Rubber Company, Akron, Ohio
Filed Mar. 17, 1980, Ser. No. 130,879
Int. Cl.³ B60C *9/00*
U.S. Cl. 152—357 R 9 Claims

1. A textile fabric composite comprised of (A) a cord or fabric thereof composed of fibers selected from at least one of nylon, polyester or aramid and (B) an adhesive coating thereon formed by the steps of (1) applying an aqueous emulsion composition coating to said fabric and (2) drying the coated fabric, wherein said aqueous emulsion composition is comprised of (a) the emulsion polymerization product of monomers comprised of (i) about 60 to about 95 parts by weight butadiene, (ii) about 5 to about 40 parts by weight glycidyl methacrylate and (iii) about 0.5 to about 10 parts by weight monomeric amide or (b) the emulsion polymerization product of (i) about 50 to about 90 parts by weight butadiene, (ii) about 0 to about 25 parts by weight styrene, (iii) about 5 to about 25 parts by weight 2-vinyl pyridine and (iv) about 0.5 to 10 parts by weight monomeric amide; wherein said monomeric amide is selected from at least one of N-(4-anilinophenyl)methacrylamide or N-(4-anilinophenyl)acrylamide.

4,300,616
MANUFACTURE OF CAST-IRON INGOT MOULDS
Antonius J. Rooze, Heemskerk; Jan den Best, Bergen, and Gerard J. Melman, Beverwijk, all of Netherlands, assignors to Estel Hoogovens BV, IJmuiden, Netherlands
Filed May 22, 1979, Ser. No. 41,409
Claims priority, application Netherlands, May 23, 1978, 7805541
Int. Cl.³ B22D *27/04*
U.S. Cl. 164—124 6 Claims

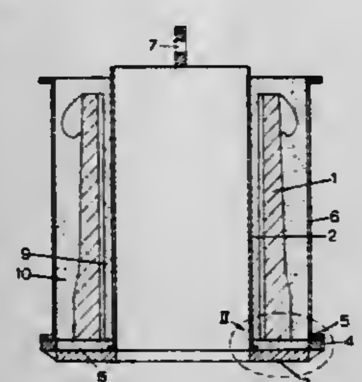

1. A method of making a cast-iron ingot mould for use in casting steel ingots, comprising the steps of (a) casting molten iron into a sand mould composed of quartz sand and furane resin of shape adapted to form the ingot mould, (b) allowing at least the iron at the interior surface of the cast ingot mould to solidify and (c), immediately after step (b), introducing oxygen-containing gas at an overpressure of 5 kg/cm^2 into the sand mould adjacent the interior lower end of the ingot mould for a period of from 10–12 hours at a rate of 35 m^3/h so that the gas contacts the interior surface of the ingot mould in an amount sufficient to cause conversion of perlite into ferrite by decarbonization, at least at the lower end of the interior surface of the ingot mould.

4,300,617
PATTERN ASSEMBLIES
Timothy R. Bauer, Euclid, Ohio, assignor to Precision Metalsmiths, Inc., Cleveland, Ohio
Filed Aug. 16, 1979, Ser. No. 66,915
Int. Cl.³ B22C *7/02*
U.S. Cl. 164—244 2 Claims

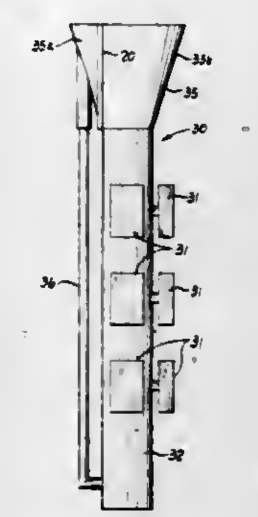

1. A set-up for making refractory molds by the lost pattern process comprising a sprue member, cup means attached to one end of said sprue member, a runner member having one end attached to said cup means and another end attached to said sprue member, bosses on the outside of said cup means designed to form plate-receiving slots in a mold wall formed around said cup means, and pattern means connected to said sprue member between said cup means and said another end of said runner member.

4,300,618
FIXABLE WIDTH CASTING WHEEL
Giulio Properzi, Via Pietro Cossa, 1, Milano, Italy
Filed Dec. 19, 1978, Ser. No. 1,129
Claims priority, application Italy, Jan. 10, 1978, 191204 A/78
Int. Cl.³ B22D *11/06*
U.S. Cl. 164—433 3 Claims

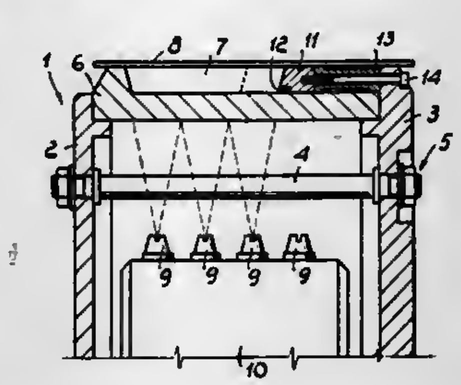

1. A casting wheel for a continuous casting machine, particularly for casting aluminum strips, comprising two facing spaced-apart support flanges of which at least one is a drive flange, a casting ring supported by said flanges and having a peripheral groove, said casting ring having a lateral wall defining one side of a mold, at least one annular member fixable concentrically to said casting ring within said groove having a lateral wall defining an opposed side of said mold, means to removably fix said at least one annular member in an axial position such as to form a mold having a predetermined axial width, and a metal belt closing said groove over an arc of said casting ring to complete said mold for receiving molten metal, wherein said at least one annular member fixable to said casting ring within said groove comprises at least one annular basic member and at least one annular gauged distance piece arranged adjacent each other, said at least one distance piece being fixed to one of said support flanges.

4,300,619
STRAND GUIDE ARRANGEMENT TO BE USED IN A CONTINUOUS CASTING PLANT
Werner Scheurecker, Linz, Austria, assignor to Voest-Alpine Aktiengesellschaft, Linz, Austria
Filed Aug. 27, 1979, Ser. No. 69,640
Claims priority, application Austria, Sep. 19, 1978, 6752/78
Int. Cl.³ B22D *11/128*
U.S. Cl. 164—448 6 Claims

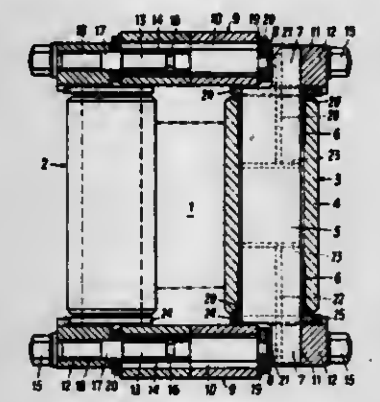

1. In a strand guide arrangement to be used in a continuous casting plant for casting a strand, and of the type including a strand guiding stand comprising longitudinal carriers, oppositely arranged rollers forming two roller guideways spaced from each other, said rollers having roller axes with ends, and holding means for detachably fastening said roller axes to said longitudinal carriers, the improvement which is characterized in that

said longitudinal carriers are hollow so as to define a cavity therein and have side walls generally parallel to the roller axes, which side walls are arranged between the holding means for the oppositely arranged rollers,

each of said holding means encompasses the ends of the roller axes of two neighboring rollers,

clamping bolts are provided for clamping the holding means for oppositely arranged rollers relative to each other, said clamping bolts penetrating the cavities of the longitudinal carriers through said side walls and being centrally positioned between the two neighboring roller axes, and

pipes are provided in the cavities of said longitudinal carrier and surround said clamping bolts so as to seal said bolts from the other portions of the cavities.

4,300,620
METHOD OF MONITORING THE MOLD GEOMETRY DURING THE CONTINUOUS CASTING OF METALS, ESPECIALLY STEEL
Manfred Wolf, Zürich, Switzerland, assignor to Concast AG, Zürich, Switzerland
Filed Sep. 15, 1980, Ser. No. 187,573
Claims priority, application Switzerland, Oct. 2, 1979, 8873/79
Int. Cl.³ B22D *11/00, 11/16*
U.S. Cl. 164—452 5 Claims

1. A method for monitoring the geometry of a mold during the continuous casting of steel strands, for instance billets and blooms, and replacing a detected damaged mold, comprising the steps of:

during the continuous casting operation determining an actual value of the withdrawal of heat from the continuous casting mold;

comparing such actual value with a predetermined reference value which is set as a function of the carbon content of the cast steel and the residence time of the cast steel within the mold;

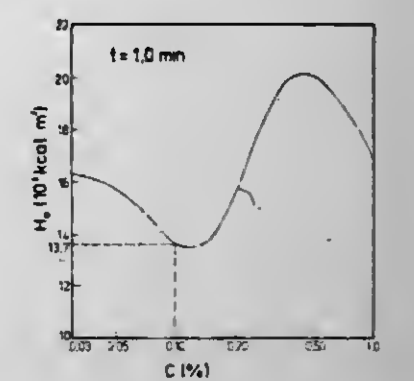

upon deviation of the actual value from such reference value by a predetermined amount determining a damaging change in the geometry of the continuous casting mold; and

exchanging the continuous casting mold when the determined damaging change requires utilization of a different continuous casting mold for further casting operations.

4,300,621
CONTINOUS CASTING METHOD WITH VAPORIZED COOLANT
Robert Wilson, Dundee, Scotland, assignor to Timex Corporation, Waterbury, Conn.
Continuation of Ser. No. 959,955, Nov. 13, 1978, abandoned. This application Apr. 29, 1980, Ser. No. 145,197
Int. Cl.³ B22D *11/00*
U.S. Cl. 164—485 3 Claims

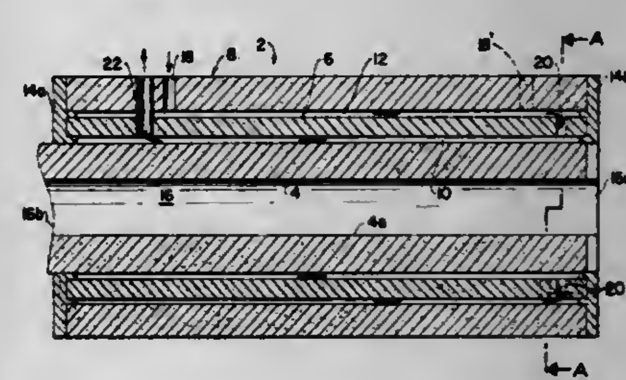

1. A method for continuously casting molten metal, comprising:

(a) providing a continuous casting mold comprising an inner mold body having a longitudinal solidification chamber therethrough with an inlet end for receiving molten metal and an outlet end through which solidified metal exits, an intermediate mold body laterally surrounding and spaced from the inner mold body to define an annular cooling chamber therebetween along the length of said mold bodies, and an outer mold body laterally surrounding and spaced from the intermediate mold body to define an annular manifold and vaporizer chamber therebetween along the length of said mold bodies;

(b) passing molten metal continuously through the solidification chamber of said inner mold body, and concurrently cooling the molten metal to effect solidification thereof by passing a vaporizable, nonreactive liquid coolant through said manifold and vaporizer chamber during which said coolant absorbs heat and is vaporized, increasing significantly in volume and velocity, and then passing the vaporized coolant through said cooling chamber during which

the vaporized coolant absorbs heat from the inner mold body to solidify the molten metal passing therethrough.

4,300,622
DISCHARGING A LATENT-HEAT ACCUMULATOR

Friedrich Lindner, Stuttgart, Fed. Rep. of Germany, assignor to Deutsche Forschungs- und Versuchsanstalt für Luft- und Raumfahrt e.V., Bonn, Fed. Rep. of Germany

Filed Jan. 14, 1979, Ser. No. 48,592

Claims priority, application Fed. Rep. of Germany, Jan. 16, 1978, 2826404

Int. Cl.³ F28D *15/00*

U.S. Cl. 165—1 **10 Claims**

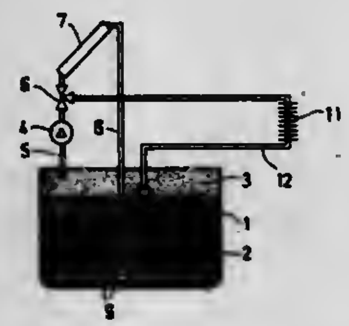

1. A method for alternately charging and discharging a latent heat accumulator including a vessel containing a quantity of heat storage medium which alternately changes from the solid state to the liquid state during addition of heat and from the liquid state to the solid state during the removal of heat and a quantity of a heat exchanger medium which is immiscible with the heat storage medium when the heat storage medium is in the liquid state, comprising the steps of

(a) pumping the heat exchanger medium from the vessel, through a heat source operable at a relatively high heating temperature, and back to the vessel, thereby to heat the heat storage medium; and

(b) pumping the heat exchanger medium from the vessel, through a heat exchanger operable at a relatively low cooling temperature, and back to the vessel at a level at which the heat storage medium is in a liquid condition, thereby to cool the heat storage medium, said heat exchanger medium being prevented from coming into direct contact with the heat storage medium when the heat storage medium is in a solid condition, whereby during discharging of the accumulator, entrapment of the cooled heat exchanger medium within the solid portion of the heat storage medium is prevented.

4,300,623
INTEGRATED MULTI-DUCT DUAL-STAGE DUAL-COOLING MEDIA AIR CONDITIONING SYSTEM

Milton Meckler, 16348 Tupper St., Sepulveda, Calif. 91343

Filed Oct. 10, 1978, Ser. No. 949,806

Int. Cl.³ F25B *29/00;* F24F *3/00*

U.S. Cl. 165—16 **39 Claims**

1. An integrated multi-duct air conditioning system for building structures divided into perimeter and interior space zones, and including;

fluid distribution means delivering conditioned air separately to the perimeter and interior space zones and taking return air therefrom,

evaporative cooling means supplying cooling liquid to the perimeter and interior space zones,

chilling-heating means supplying separate chilling and heating liquids to the fluid distribution means and conditioning the air delivered thereby and supplying chilling liquid to the perimeter and interior space zones,

and liquid distribution means receiving the evaporatively cooled liquid and applying it to the absorption of heat from lighting means in the perimeter and interior space zones respectively and receiving the chilling liquid and

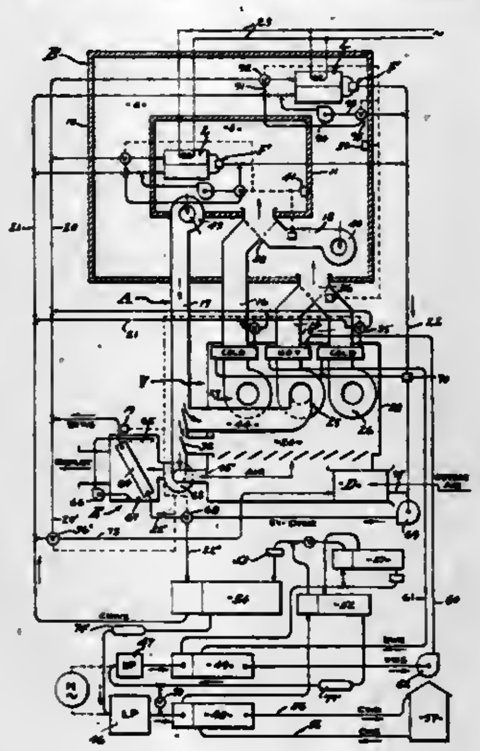

applying it to the absorption of space heat from the perimeter and interior space zones respectively.

4,300,624
OSMOTIC PUMPED HEAT PIPE VALVE

Charles P. Minning, S. Pasadena, and George L. Fleischman, Cerritos, both of Calif., assignors to Hughes Aircraft Company, Culver City, Calif.

Filed Dec. 17, 1979, Ser. No. 103,884

Int. Cl.³ F28D *15/00;* F28F *13/00*

U.S. Cl. 165—32 **14 Claims**

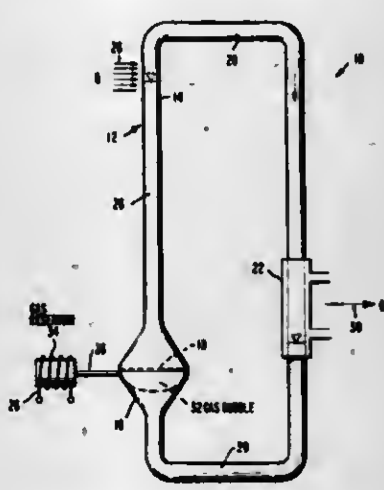

1. In an osmotic pumped heat pipe having reservoirs with solvent and solution therein and solvent permeable membrane material between said reservoirs, the improvement for controlling the rate of osmotic pumping through said membrane material comprising means for limiting the surface area of said membrane material contactable by said solvent.

4,300,625
PREVENTING DEPOSITION ON THE INNER SURFACES OF HEAT EXCHANGE APPARATUS

Gerold M. Mikhailov, prospekt Lenina, 73, kv. 22; Nikolai V. Tyabin, ulitsa Sovetskaya, 39, kv. 5, both of Volgograd; Vladimir A. Khvorostukhin, ulitsa Molodezhnaya, 4, kv. 29, Volzhsky, Volgogradskoi oblasti; Valery V. Zakharov, ulitsa Akademicheskaya, 7, kv. 20, Volgograd, and Vitaly N. Nikolaev, prospekt Lenina, 93, kv. 19, Volzhsky, Volgogradskoi oblasti, all of U.S.S.R.

Continuation of Ser. No. 542,722, Jan. 21, 1975, abandoned. This application Oct. 21, 1976, Ser. No. 734,461

Int. Cl.³ F28G *1/12*

U.S. Cl. 165—95 **5 Claims**

1. A shell-and-tube apparatus for carrying a flowing liquid medium containing solid particles which exert mechanical action on the inner surfaces of the apparatus to prevent deposition thereon, which comprises: a hollow housing with a cover at each end; tube walls mounted in said housing; tubes vertically mounted in, and uniformly spaced throughout, said housing and having the ends thereof fixed in said tube walls, each of said tubes being partially filled with solid particles; said tube walls dividing the inner space of said housing with said covers into a tubular space and an intertubular space; connecting branches adjoining the covers of said housing and serving for feeding and discharging a cooling liquid medium into and out of the tubular space of the apparatus; connecting branches adjoining said housing and serving for feeding and discharging a specific medium to be cooled into and out of the intertubular space of the apparatus; means installed in each of said tubes at the medium flow inlet thereof for regulating the medium flow velocity at a uniform rate below that which would entrain said solid particles, thus serving to prevent said solid particles from escaping from said tube; each of said tubes having a widening portion at the medium flow outlet thereof, which widening portion serves to prevent said solid particles from being carried away therefrom by the medium flow which fluidizes said solid particles.

4,300,626
HEAT-PIPE THERMOSTATS OF HIGH PRECISION

Claus-Adolf Busse, Arolo di Leggiuno, and Jean-Paul Labrande, Ispra, both of Italy, assignors to European Atomic Energy Community (EURATOM), Kirchberg, Luxembourg

Continuation of Ser. No. 673,874, Apr. 4, 1976, abandoned. This application Feb. 9, 1978, Ser. No. 876,491

Claims priority, application Liechtenstein, Apr. 4, 1975, 72213

Int. Cl.³ F28D *15/00*

U.S. Cl. 165—96 **1 Claim**

1. In a gas controlled heat-pipe thermostat of high precision having a temperature-controlled chamber arranged at least partly within the evaporation and condensation cycle and a gas reservoir connected to said heat-pipe, the improvement comprising in that in the heat-pipe a cooling surface is arranged for the production of condensate and for contacting and scavenging the surface of said temperature-controlled chamber, said cooling surface being in a condensation zone outside the direct effect of the control gas and separate from the chamber and

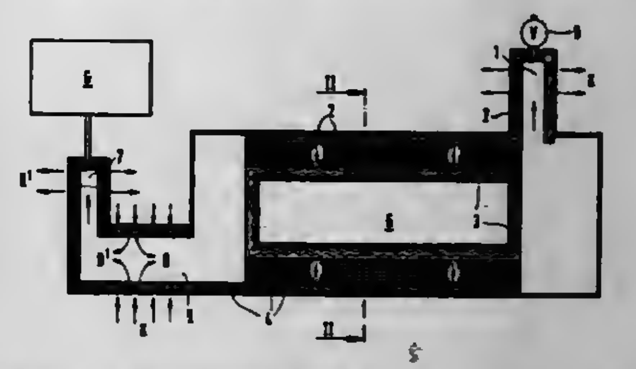

connected to the outer wall of said chamber by liquid conducting capillary structures.

4,300,627
INSULATED HOUSING FOR CERAMIC HEAT RECUPERATORS AND ASSEMBLY

Joseph J. Cleveland, Box 10B, Boxer Dr., Dushore, Pa. 18614; Ray L. Newman, Hillcrest Dr., R.D. #1, Towanda, Pa. 18848, and William L. Mingos, Box 22, Main St., E., Smithfield, Pa. 18817

Filed Jun. 4, 1979, Ser. No. 45,492

Int. Cl.³ F28F *7/00*

U.S. Cl. 165—137 **8 Claims**

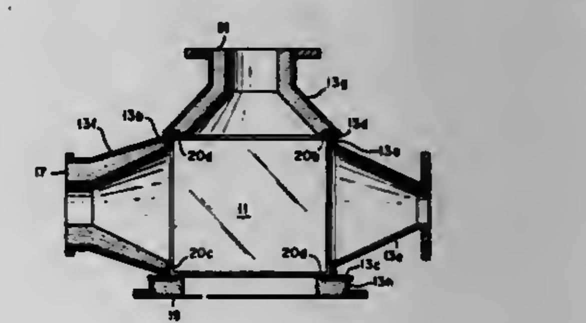

1. A heat recuperator assembly comprising:

(a) a core of a cross-flow ceramic recuperator having first and second pairs of opposing faces defining cell openings for the passage of first and second heat transfer fluids, respectively, in directions transverse to one another, the first fluid transferring heat to the second fluid during passage through the cells, whereby each pair of faces has in operation a hot face and a cold face, the hot face of the first pair being the inlet face for the first fluid, and the hot face of the second pair being the outlet face for the second fluid;

(b) a metallic housing surrounding the core, the housing having apertured faces adjacent the operating faces of the core;

(c) at least three conduit portions extending from the apertured faces, at least one of the conduit portions being tapered and having at least one dimension of its largest cross-section larger than the aperture of the apertured face from which it extends and having a substantial thickness of insulating means on its inner surface which does not decrease the size of the aperture of said apertured face; and

(d) the internal metal surfaces of the assembly being insulated so that the first fluid contacts only insulation in passing through the assembly.

4,300,628
HEAT EXCHANGER ASSEMBLY
William Melnyk, Lathrup Village, Mich., assignor to McCord Corporation, Detroit, Mich.
Filed Dec. 18, 1978, Ser. No. 970,483
Int. Cl.^{3} F28D *1/04;* F28F *9/04*
U.S. Cl. 165—149 **14 Claims**

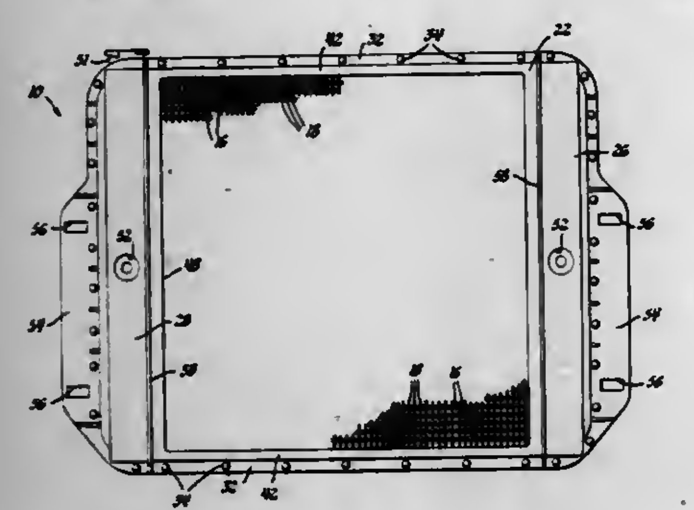

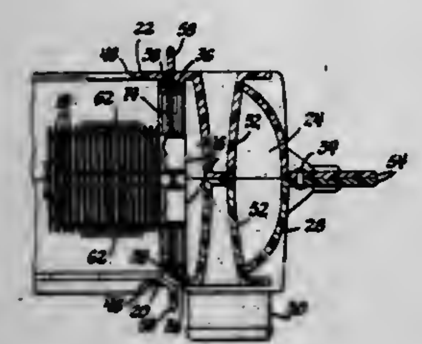

1. A heat exchanger assembly comprising; a heat exchanging core including spaced headsheets adjacent the opposite extremities thereof, two radiator components defining spaced open cavities with each component engaging the periphery of each of said headsheets for being in fluid-tight relationship with said headsheets within the opening of said cavities to close the cavities and define a pair of spaced tanks for fluid to flow between said core and said tanks, characterized by each of said components being integral with one of said components engaging a portion of the periphery of each of said headsheets and the other component engaging the remaining portion of the periphery of each of said headsheets, said components being in mating engagement with one another so that said two components and said headsheets are sealed together to define said spaced tanks.

4,300,629
CROSS-FIN TUBE TYPE HEAT EXCHANGER
Toshio Hatada; Takao Senshu; Akira Arai; Fumio Harada, all of Shimizu; Atsushi Matsuzaki, Tokyo; Hajime Futawatari, Shimizu; Yutaka Imaizumi, Yaizu, and Sumiyoshi Takeda, Shimizu, all of Japan, assignors to Hitachi, Ltd., Tokyo, Japan
Filed Jun. 20, 1979, Ser. No. 50,455
Claims priority, application Japan, Jun. 21, 1978, 53-74187
Int. Cl.^{3} F28F *1/32, 1/38*
U.S. Cl. 165—151 **25 Claims**

1. A cross-fin tube type heat exchanger comprising a large number of fins spaced in parallel with one another and each having a predetermined area, and

a plurality of heat transfer tubes extended through and fixed to said fins, thereby to permit heat exchange, across the walls of said heat transfer tubes and through said fins, between a heat exchanging medium flowing through said heat transfer tubes and another heat exchanging medium flowing along the surfaces of said fins,

said heat exchanger further comprising

a large number of upwardly convexed louver elements formed in the portions of said fins between adjacent heat transfer tubes,

said louver elements being formed by forming a number of slits in said portions of said fins in a direction perpendicular to that of flow of air flowing along the surfaces of said fins,

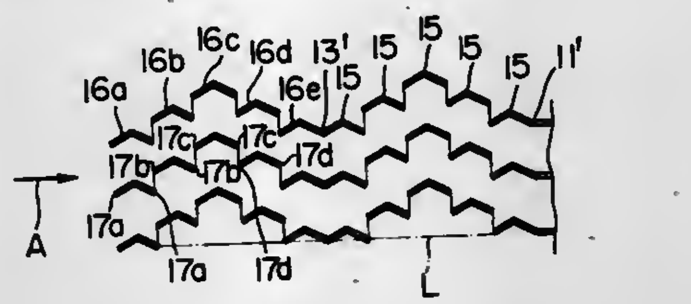

bending each elongated section defined between respective adjacent slits to have an obtuse apex angle with the edge line extending on the breadthwise bisector line of the elongated section and

raising said elongated sections in selected positions in the form of bridges such that the edges of adjacent obtuse type louver elements are staggered in the direction of their heights.

4,300,630
FINNED METAL TUBE AND METHOD FOR MAKING THE SAME
Benito L. Trojani, via Polar, 8 - Lugano-Breganzona (Svizzera), Italy
Filed Dec. 22, 1977, Ser. No. 863,486
Claims priority, application Italy, Jan. 28, 1977, 19736 A/77
Int. Cl.^{2} F28F *1/38*
U.S. Cl. 165—181 **3 Claims**

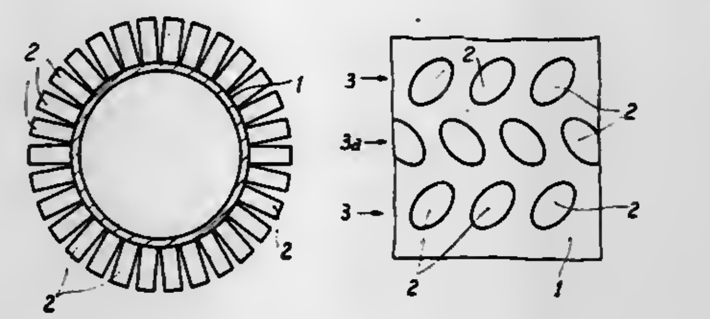

1. A heat exchanger element comprising:

(i) a metal tube having a cylindrical outer surface and a coaxial cylindrical plain inner surface,

(ii) a plurality of fins secured to and extending radially from the outer surface of the tube, said fins being of elliptical cross-section, said fins being arranged in rows which are equally spaced over the entire outer surface of the tube, the fins of each row being staggered with respect to the corresponding fins of the adjoining rows, the fins of each row having their respective major axes mutually parallel and at 45° with respect to the tube axis, the fins of each row having their respective major axes at 90° to the respective major axes of the fins of adjoining rows.

4,300,631
FLEXIBLE CONTINUOUS GROUT FILLED PACKER FOR USE WITH A WATER INFUSION SYSTEM
Albert Sainato; Joseph Cervik, and Leonard J. Prosser, Jr., all of Pittsburgh, Pa., assignors to The United States of America as represented by the Secretary of the Interior, Washington, D.C.
Filed Apr. 23, 1980, Ser. No. 142,946
Int. Cl.^{3} E21B *33/00*
U.S. Cl. 166—187 **7 Claims**

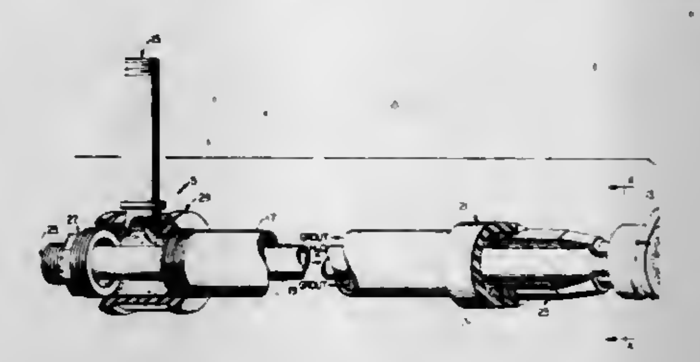

1. A water infusion packer system for use in an underground coal mining borehole comprising:

a mandrel made of a spark resistant material mounted in said borehole, said mandrel being connected to means for conveying water from the mine working area to and through the mandrel to the back section of the borehole;

an expandable packer envelope encircling the mandrel along substantially its entire length located in the borehole, said envelope being fixed to the mandrel near its front and back sections with a volume of grout fillable space being provided around the mandrel therebetween; and

means to convey a liquid grout to the fillable space to cause the envelope to expand outwardly to contact and seal the borehole along its length while not communicating with the water in the mandrel.

4,300,632
METHOD FOR INCREASING THE PRESSURE IN OIL-BEARING GEOLOGICAL STRUCTURES
Lars I. Wiberger, Skara; Peter H. Rönnow, Mölnlycke; Per F. Tengblad, Upsala, and Bert G. H. Hellman, Åkersberga, all of Sweden, assignors to Chemical Dynamics Sweden AB, Grabo, Sweden
Filed Oct. 17, 1979, Ser. No. 85,713
Claims priority, application Sweden, Oct. 26, 1978, 7811118-4
Int. Cl.^{3} E21B *43/22*
U.S. Cl. 166—246 **4 Claims**

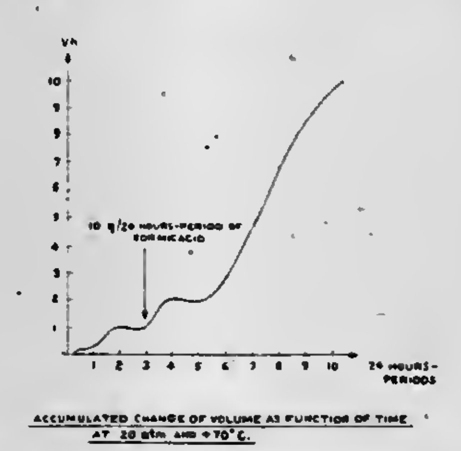

1. A method for increasing pressure in geological oil-bearing structures by gas production due to microbial activity, said method comprising adding to a geological oil-bearing structure an aneorobic micro-organism, a culture medium and formic acid such that the formic acid is converted to carbon dioxide and methane gases resulting in increased pressure in said structure, said aneorobic microorganism being Methanobacterium Termoautotroficum.

4,300,633
METHOD OF CEMENTING WELLS WITH FOAM-CONTAINING CEMENT
Robert B. Stewart, Lagos, Nigeria, assignor to Shell Oil Company, Houston, Tex.
Filed Jun. 5, 1980, Ser. No. 156,848
Claims priority, application United Kingdom, Dec. 3, 1979, 41635/79
Int. Cl.^{3} E21B *33/14, 42/00*
U.S. Cl. 166—250 **3 Claims**

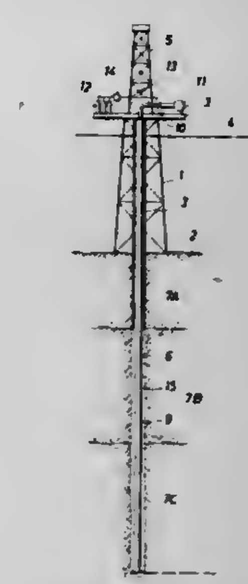

1. A process for cementing a pipe within the borehole of a well comprising:

flowing a cement slurry into the well and into a vertically extensive column within the annular space between the pipe and the wall of the borehole;

mixing a proportioned amount of gas with at least some of the inflowing cement slurry while monitoring the proportion of gas in the slurry by at least incrementally measuring the density of the inflowing gas-containing slurry;

adjusting the proportion of gas in the inflowing slurry to the extent required so that, within the annulus, (a) at least near the top of the column, the cement slurry comprises a foam, (b) the maximum proportion of gas within any portion of the slurry is insufficient to form a cement having a porosity greater than about 52%, (c) prior to the setting of the cement, the hydrostatic pressure within the column of cement slurry, exceeds the formation fluid pressure but is less than the fracturing pressure of the adjacent earth formation, and (d) after setting the cement is, at each depth, strong enough to withstand the stresses applied at that depth; and,

keeping the pipe and cement slurry substantially static at least throughout the setting of the cement.

4,300,634
FOAMABLE COMPOSITIONS AND FORMATIONS TREATMENT
Richard L. Clampitt, Bartlesville, Okla., assignor to Phillips Petroleum Company, Bartlesville, Okla.
Filed Dec. 4, 1979, Ser. No. 100,085
Int. Cl.^{3} E21B *43/24, 33/138*
U.S. Cl. 166—272 **8 Claims**

1. A process for improving the production of oil from an oil-bearing formation by pressure of steam therein which is channeling undesirably from a steam injection well into a production well owing to channeling in said formation which comprises:

(a) injecting into said channels of said formation a foamable gelled composition which will foam when contacted with

steam, said surfactant being present in sufficient quantities to form a stable self-collapsing foam when said solution is contacted with steam, said foamable gelled composition comprising
(1) water,
(2) a surfactant,
(3) a water-thickening amount of a water-dispersible polymer selected from cellulose ethers, polyacrylamides, biopolysaccharides, and polyalkylene oxides,
(4) a small, but effective amount of at least one aldehyde component, and
(5) a small, but effective amount of at least one phenolic component, which amounts of (4) and (5) are sufficient to cause gelation of an aqueous dispersion of (3) and form said gelled composition,
(b) injecting steam downwardly through the injection well and outwardly through the formation into contact with said aqueous solution in said channels thereby causing said polymeric material to be broken down by heat which then allows the steam to form a relatively stable foam having steam as the gas phase in said channels and thereby plug same and thus producing a selective blocking which forces the remaining steam to produce oil from less depleted portions of the formation, and
(c) continuing to inject steam through the formation to produce oil from the less depleted portions of the formation.

4,300,635
AQUEOUS PETROLEUM SULFONATE MIXTURE AND METHOD OF USE IN POST-PRIMARY OIL RECOVERY

Gilbert R. Glinsmann, Bartlesville, Okla., assignor to Phillips Petroleum Company, Bartlesville, Okla.

Continuation-in-part of Ser. No. 668,347, Mar. 19, 1976, abandoned. This application Feb. 19, 1980, Ser. No. 122,349

Int. Cl.³ E21B *43/22*

U.S. Cl. 166—274 **34 Claims**

1. A method of displacing oil in an oil bearing subterranean formation, said method including the steps of:
(a) removing a diluent oil from feed comprising a petroleum sulfonate containing diluent oil and active petroleum sulfonate to form a substantially deoiled petroleum sulfonate with the remaining diluent oil being present in an amount of less than about 15 percent by weight of the total weight of diluent oil and active petroleum sulfonate;
(b) forming a mixture containing the deoiled petroleum sulfonate, water soluble polymer effective for increasing the viscosity of the mixture, water, inorganic salt capable of forming an admixture with water and capable of reducing the interfacial tension between the mixture and the oil contained in said formation, and a first oil, said first oil having a distillation temperature of between about 600° F. and about 1100° F. and being effective to increase the tolerance of the mixture of the inorganic salt and provide a stable mixture, said mixture having the components mixed in relative proportions to achieve an interfacial tension of less than about 0.01 dynes per centimeter with oil contained in the formation, said first oil plus remaining diluent oil, if any, and the active petroleum sulfonate being in a weight ratio of at least about 0.5:1 of first oil and diluent oil, if any, to active petroleum sulfonate, said water soluble polymer being present in an amount sufficient to increase the viscosity of the mixture above the viscosity which the mixture would have without the water soluble polymer, said diluent oil being characterized by causing instability upon mixing said feed, said water soluble polymer, water and said inorganic salt; and
(c) injecting said mixture into an oil-bearing subterranean formation.

30. A method of displacing residual oil in an oil bearing subterranean formation with an aqueous mixture containing a first oil and petroleum sulfonate, said method including the steps of:
adjusting the first oil-to-active petroleum sulfonate weight ratio to within a range of from about 0.5:1 to about 2.0:1, said first oil having a distillation temperature in the range from about 600° F. to about 1100° F.;
forming a first mixture of water, first oil, active petroleum sulfonate, and monovalent metallic salt capable of forming an admixture with water and capable of reducing the interfacial tension between the first mixture and residual oil contained in the formation, said first oil being capable of and said monovalent metallic salt and active petroleum sulfonate being in amounts effective for producing a stable mixture having an interfacial tension of less than about 0.01 dynes per centimeter with residual oil in the formation;
forming a second mixture of water and water soluble polymer, said water soluble polymer being present in an amount sufficient to increase the viscosity of said second mixture above the viscosity of said water in the absence of said water soluble polymer; and
injecting into said oil bearing subterranean formation said first mixture immediately followed by said second mixture.

4,300,636
CONSTANT BOTTOM CONTACT TOOL

James D. Lawrence, Conroe, Tex., assignor to Dailey Oil Tools, Inc., Houston, Tex.

Division of Ser. No. 3,045, Jan. 12, 1979. This application Mar. 7, 1980, Ser. No. 127,955

Int. Cl.³ E21B *34/12, 17/07*

U.S. Cl. 166—334 **2 Claims**

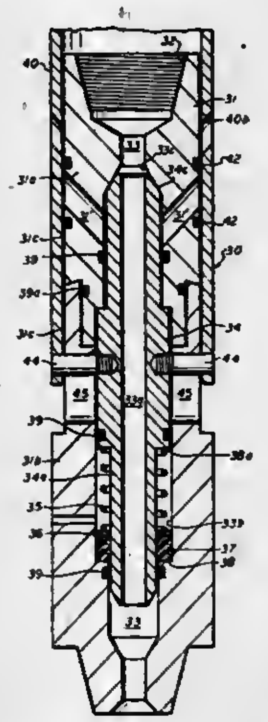

1. An arrangement for incorporating in a well string in a well bore to communicate fluids from the well string to the well bore for flushing thereof to inhibit well string sticking comprising:
a. a valve body for securing in the well string and having port means therein;
b. a valve element having a longitudinal bore therethrough;
c. spring means supported by said valve body to maintain said valve element in position to normally close off flow through the valve body port means to the well bore;
d. sleeve means surrounding said valve body and having port means therein; and
e. means connecting said sleeve means to said valve element whereby the well string may be lowered to engage said sleeve means and move it and said valve element to communicate the valve body port means and sleeve port means for conducting fluid from the valve body to the well bore.

4,300,637
TOOL FOR REMOTELY DETERMINING THE POSITION OF A DEVICE IN AN UNDERWATER WELL ASSEMBLY

William A. Valka, Spring, Tex., assignor to Armco Inc., Middletown, Ohio

Filed Feb. 11, 1980, Ser. No. 120,696

Int. Cl.³ E21B *7/12*

U.S. Cl. 166—336 **10 Claims**

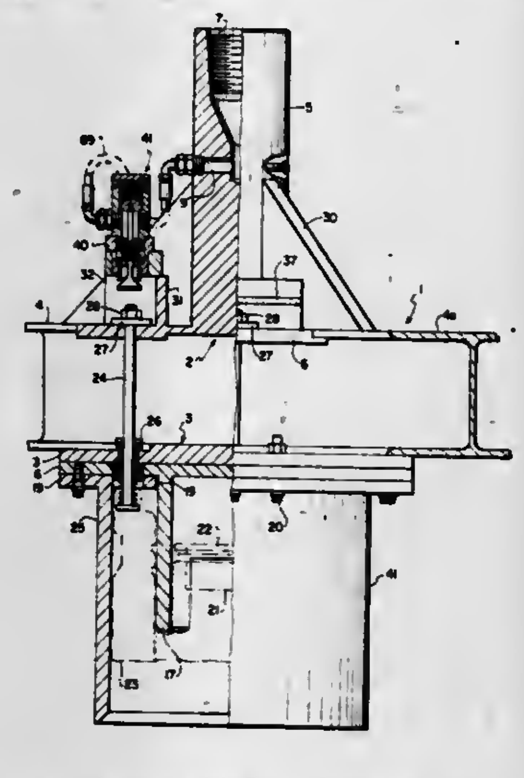

1. In a tool for determining by operations carried out from an operational base at the surface of a body of water whether, in an underwater well assembly equipped with guidance means, a device in the well assembly occupies a specific intended position, the combination of
support means connectable to a handling string;
guide means connected to the support and constructed and arranged to coact with the guidance means to maintain the support in a specific position relative to the underwater well assembly as the support approaches the well assembly;
locator means carried by the support and constructed and arranged to coact with a part of the underwater well assembly in a specific fashion only when the support and said part of the well assembly are in one predetermined positional relationship;
feeler means mounted on the support for movement from a normal position to an indicating position,
the feeler means being biased to its normal position and occupying a position on the support relative to the locator means such that the feeler means engages a part of the well assembly and is thereby positively moved to its indicating position only when the device in the wellhead occupies its specific intended position and the locator means coacts with said part of the well assembly;
an indicator valve unit mounted on the support and comprising
a body defining an internal chamber and having
an inlet port connectable to means for supplying pressure fluid to the chamber from the operational base, and
an outflow port via which pressure fluid can escape from the chamber,
a valve seat, and
a movable valve member mounted to coact with the valve seat and biased to a first position relative to the valve seat;
the valve seat and movable valve member being disposed to control fluid flow via the outflow port;
the indicator valve occupying a position on the support such that the movable valve member is engaged by the feeler means and moved to a second position relative to the valve seat when the feeler means moves to its indicating position,
movement of the movable valve member to its second position causing a pressure change in the internal chamber, which change can be observed remotely as a first indication that the device in the well assembly occupies its specific intended position; and
second means carried by the support and coacting with the feeler means to provide a second remotely observable indication that the device in the well assembly occupies its specific intended position.

4,300,638
AUTOMATIC POSITION CONTROL APPARATUS FOR GROUND WORKING VEHICLE

Yoshiyuki Katayama, Osaka; Shigekazu Hasegawa, Sakai; Shigeaki Okuyama, Kawachinagano, and Norimi Nakamura, Sakai, all of Japan, assignors to Kubota, Ltd., Japan

Filed Feb. 7, 1980, Ser. No. 119,445

Claims priority, application Japan, Feb. 15, 1979, 54/17575

Int. Cl.³ A01B *63/112*

U.S. Cl. 172—10 **4 Claims**

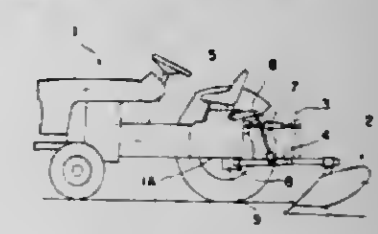

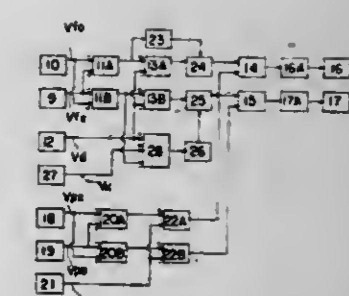

1. An automatic position control apparatus for a ground working implement attached to a working vehicle vertically oscillatable by hydraulic means, the control apparatus being adapted to automatically control position of the working implement so that deviation of an actual draft value of the ground working implement from a preset optimum draft value is maintained within a permissible range, said control apparatus comprising:
a draft setting unit for presetting said optimum draft value;
a draft detector for detecting said actual draft value;
subtracting means for calculating the deviation of said actual draft value from said optimum draft value;
a sensitivity setting unit for setting a maximum permissible value and a minimum permissible value of said permissible range;
comparing means for comparing said deviation with said maximum permissible value and minimum permissible value and for transmitting a lifting control signal to cause said hydraulic means to lift said working implement when said deviation is greater than said maximum permissible value and to transmit a lowering control signal to cause said hydraulic means to lower said working implement when said deviation is smaller than said minimum permissible value;
a detector for detecting, when said deviation is greater than said maximum permissible value, whether or not said deviation is decreasing; and
a lift preventing circuit responsive to detections by said detector for stopping said lifting control signal when said

deviation is greater than said maximum permissible value and is at least decreasing;
whereby said ground working implement is lifted only when said deviation is greater than said maximum permissible value of the permissible range and is increasing or remaining constant.

4,300,639
SOIL CULTIVATING MACHINES
Cornelis van der Lely, 7, Brüschenrain, Zug, Switzerland
Filed May 16, 1979, Ser. No. 39,690
Claims priority, application Netherlands, May 18, 1978, 7805361; May 18, 1978, 7805363; May 23, 1978, 7805545; May 23, 1978, 7805546; May 25, 1978, 7805665
Int. Cl.³ A01B *33/06*
U.S. Cl. 172—49.5 **12 Claims**

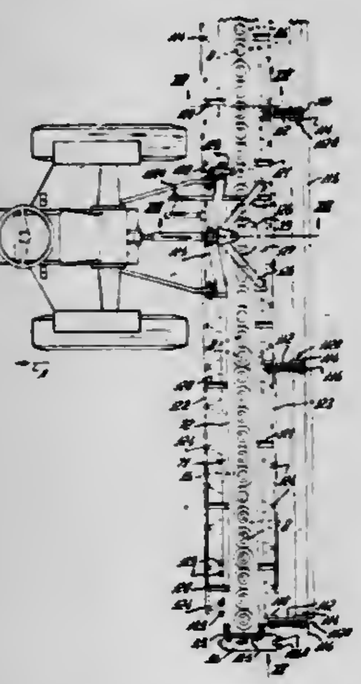

1. A soil cultivating machine comprising a frame and a plurality of rotatable soil working members mounted along the length of an elongated portion of said frame, said portion being hollow and extending transverse to the direction of travel, each of said members including an upwardly extending shaft that defines a respective axis of rotation, the lower end of said shaft comprising a carrier and a single tine fastened to said carrier, the upper end of said tine being a fastening portion and an operative portion depending from said fastening portion, said operative portion being eccentric relative to said axis of rotation, a curved portion joining the fastening and operative portions, at least the majority of said curved portion being located eccentrically of the center of said fastening portion and said curved portion also being positioned substantially eccentric relative to said rotary axis, adjacent said fastening portion, a supporting member positioned at each side of the frame portion and each supporting member comprising an upwardly displaceable, upwardly extending part that slideably co-operates with guide means, said guide means being supported on a substantially vertical side plate that closes the hollow frame portion and said guide means being resiliently movable with respect to the remainder of said frame portion.

4,300,640
AGRICULTURAL IMPLEMENT HAVING FIELD AND TRANSPORT MODES
Bobby G. Baxter, Warrenton; Jerry L. Wilbeck, Kansas City, and Wendell J. Wilbeck, St. Peters, all of Mo., assignors to The Binkley Company, Warrenton, Mo.
Filed Jul. 20, 1979, Ser. No. 59,444
Int. Cl.³ A01B *73/00*
U.S. Cl. 172—311 **20 Claims**

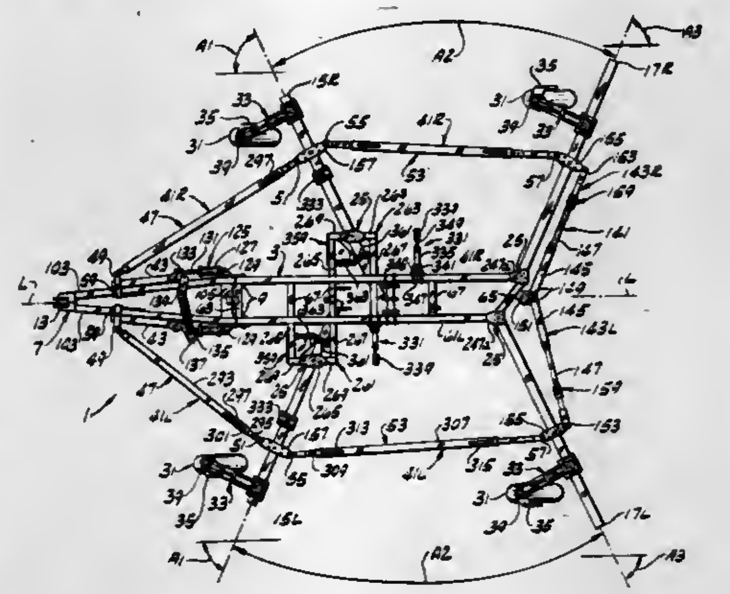

1. An agricultural implement comprising:
a frame on wheels, said frame having a longitudinal axis and left and right sides as viewed in a forward direction;
a tongue for hitching the frame to a towing vehicle, said tongue extending forward from the frame and being pivotally connected adjacent its rearward end to the frame for up and down swinging movement relative to the frame on an axis transverse to the frame;
means for raising and lowering the frame relative to its wheels;
a forward and a rearward tool-carrying beam on the left side of the frame;
a forward and a rearward tool-carrying beam on the right side of the frame;
each beam carrying a gang of tools;
each beam being pivoted on the frame on a first axis for swinging movement relative to the frame between a field position extending out from the respective side of the frame at an angle to the longitudinal axis of the frame and a transport position extending rearward from its pivot and generally parallel to the longitudinal axis of the frame;
each beam also being pivoted on the frame for up and down swinging movement relative to the frame on a second axis;
a swivel wheel for each beam;
means for raising and lowering each beam relative to its swivel wheel whereby the beam may be maintained in a generally horizontal position as the frame is raised or lowered relative to its wheels;
a linkage between the tongue and the left forward and rearward beams;
a linkage between the tongue and the right forward and rearward beams;
each linkage comprising an arm pivoted on the tongue for swinging movement between a field position extending forward from the pivot for the arm and a transport position extending out from the respective side of the tongue;
each of said arms being swingable up and down with the tongue on swinging of the tongue on said transverse axis and swingable in and out relative to the tongue between the said field and transport positions of the arm;
each linkage further comprising a first link having a connection at one end constituting its forward end to the respective arm and a connection at its other end constituting its rearward end to the respective forward beam, said connections being such as to allow up and down swinging of the tongue relative to the frame and the forward beam and to allow swinging movement of the forward beam between its field and transport positions and up and down swinging of the forward beam relative to the frame;
each linkage further comprising a second link having a connection at one end constituting its forward end to the respective forward beam and a connection at its other end constituting its rearward end to the respective rearward beam, said connections being such as to allow swinging movement of the beams between their field and transport positions and relative up and down swinging of each beam and the respective second link; and
means for latching each of said arms in field position, said links thereupon holding said beams in field position as the implement is towed forward.

4,300,641
TORQUE RESPONSIVE, DUAL SPEED ROTARY POWER DRIVER
Karl Kinkel, Frankfurt am Main, Fed. Rep. of Germany, assignor to DeMag Aktiengesellschaft, Duisburg, Fed. Rep. of Germany
Filed Feb. 21, 1979, Ser. No. 13,073
Claims priority, application Fed. Rep. of Germany, Feb. 23, 1978, 2807677
Int. Cl.³ B25B *23/145*
U.S. Cl. 173—12 **5 Claims**

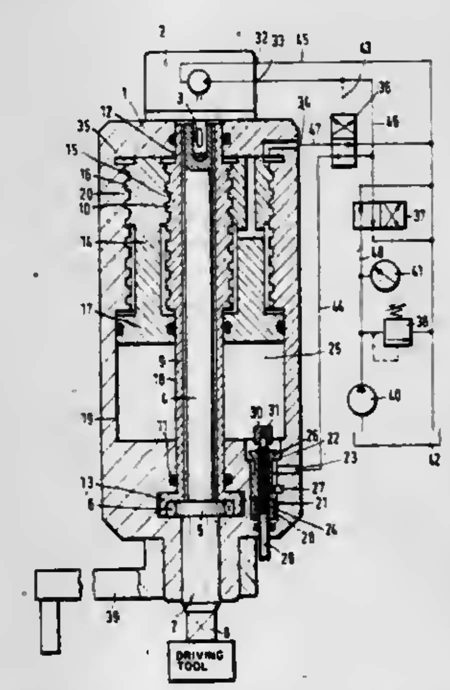

1. A pressure fluid driven rotary tool apparatus, having a predetermined tightening torque and tightening limit, comprising:
(a) a source of pressure fluid;
(b) a tool casing;
(c) a drive shaft in said casing;
(d) a drive motor connected to one end of said drive shaft for rotating said drive shaft at high speed at predetermined low tightening torque;
(e) pressure fluid flow communication means between said source and said motor;
(f) a driving tool fixed to said drive shaft at the end thereof opposite said motor;
(g) a piston in said casing coaxial with said drive shaft, said piston being axially displaceable in said casing; said apparatus characterized by
(h) a drive element in said casing, said drive element coaxially positioned between said drive shaft and said piston;
(i) means for connecting said drive shaft and said drive element in one direction of rotation upon said drive shaft reaching said predetermined tightening torque for rotating said drive shaft and driving tool at low speed at predetermined high tightening torque;
(j) said connecting means including
(i) a one-way clutch type mechanism and
(ii) means for converting the axial displacement movement of said piston into rotary movement for said drive element; and
(k) adjustable first valve means which effects said connecting means when the pressure of said pressure fluid obtains a preselected pressure.

4,300,642
DEVICE FOR REAMING AND COLLECTING DUST, FOR A DRILLING APPARATUS
Raymond Perraud, Villeurbanne, France, assignor to Société d'Etude et de Construction de Machines pour toutes Industries S.E.C.O.M.A., Meyzieu, France
Filed Mar. 11, 1980, Ser. No. 129,257
Claims priority, application France, Mar. 14, 1979, 79 07077
Int. Cl.³ E21C *7/00*
U.S. Cl. 175—173 **3 Claims**

1. In a drilling apparatus adapted to produce a drilled hole in the roof of a mine gallery to receive a bolt, said apparatus comprising a support, a drill carriage mounted on said support, a bit rotatable on said carriage and extending upwardly therefrom; and means for vertically displacing said carriage to drill a hole in the roof of said gallery, the improvement which comprises in combination:
a reamer surrounding said bit and formed with a generally conical cutting portion adapted to form a flared mouth of said hole, said reamer and said bit defining an axially extending clearance all around said bit whereby drilling dust can pass downwardly through said galleries;
a driving sleeve integral with said reamer therebelow surrounding said bit with an axially extending clearance communicating with the clearance between said bit and said reamer;
drive means connected to said sleeve for rotating said reamer independently of said bit, said clearances forming an annular passage for said dust;
a container communicating with said passage and disposed below said sleeve for receiving said dust; and
means connected to said container for evacuating collected dust therefrom.

4,300,643
DOUBLE CORE BARREL
Honore J. Lambot, Wauthier-Braine, Belgium, assignor to Diamant Boart, Brussels, Belgium
Filed Mar. 13, 1980, Ser. No. 129,948
Claims priority, application Belgium, Mar. 22, 1979, 194149
Int. Cl.³ E21B *9/20, 25/00*
U.S. Cl. 175—244 5 Claims

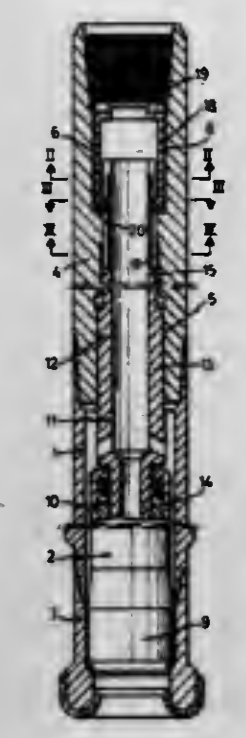

1. A double core barrel comprising:
a rotary outer tube,
a tapped body provided in the upper portion of the outer tube,
a boring bit mounted on the lower end of the outer tube,
a non-rotary inner tube,
an extractor cone arranged on the lower end of the inner tube,
a pivoting means connected with the inner tube whereby the lower non rotary portion of said pivoting means is screwed with respect to the upper end of said inner tube whilst the upper rotary portion of said pivoting means is screwed into the tapped body of the outer tube in order to rotate in conjunction with this latter, the upper end of the upper rotary portion of said pivoting means being designed to be able to cooperate with an adjustment spanner which transmits a rotation couple to the upper end about its longitudinal axis,
at least one longitudinal groove externally provided in the upper end of the upper rotary portion of the pivoting means,
at least one slot at the base of a smooth cylindrical bore provided in the tapped body of the outer tube whereby said slot is located at the level of the longitudinal groove of the upper end of the upper rotary portion of the pivoting means,
a locking cap which may be carried by the upper end of the upper rotary portion of the pivoting means, said locking cap having at least one lower catch, said locking cap being designed on the one hand, to be able to cooperate with an adjustment spanner preferably identical to the previous spanner and able to transmit a rotation couple to the catch about its longitudinal axis and, on the other hand, to be able to slide between said upper end and the smooth cylindrical bore of the tapped body in such a way that the catch may be firstly engaged in the longitudinal groove of the said upper end and then simultaneously in this same longitudinal groove and in the slot at the base of this smooth cylindrical bore in such a way that the cap then locks in an angular manner the upper rotary portion of the pivoting means and the tapped body of the outer tube in order to prevent their relative rotation about their common vertical axis.

4,300,644
APPARATUS FOR WEIGHING FOWL
Pieter Meyn, 68 Noordeinde, 1510 AA Oostzaan, Netherlands
Filed Jul. 2, 1979, Ser. No. 53,747
Claims priority, application European Pat. Off., Jul. 5, 1978, 78200082.2
Int. Cl.³ G01G *19/00, 13/00, 21/22*
U.S. Cl. 177—145 6 Claims

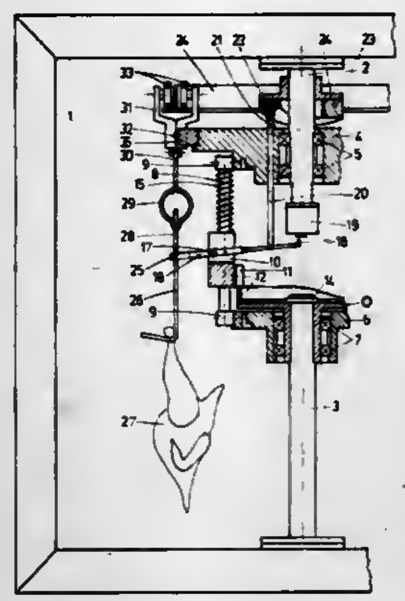

1. Method for weighing birds, which hand from shackles of known weight carried by a continuously moving overhead conveyor, comprising the steps of:
moving a pick-up member along in synchronization with said conveyor during part of its path;
additionally moving said pick-up member relative to said conveyor, so that it will lift up a said shackle and disconnect it completely from said conveyor;
transmitting, without any substantial relative movement or friction, to a load cell or other measuring device the force exerted on said pick-up means by the combined weights of said shackle and the bird it carries, for measuring said force; and
finally releasing said shackle again to reconnect it with said conveyor.

4,300,645
WEIGHING SCALE FOR SMALL LOADS
Eugene L. Sly, P.O. Box 19545, Portland, Oreg. 97219, and David C. English, 3822-59th Ave., SW., Seattle, Wash. 98116
Filed Oct. 9, 1979, Ser. No. 82,620
Int. Cl.³ G01G *3/08*
U.S. Cl. 177—211 8 Claims

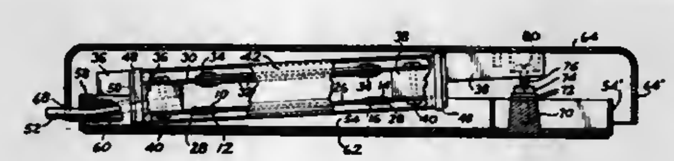

1. A load weighing scale comprising:
(a) an elongated bending beam,
(b) an elongated flexure strap,
(c) a pair of horizontally spaced apart cantilever blocks secured to the opposite ends of the bending beam and flexure strap and supporting said beam and strap in vertically spaced-apart relationship,
(d) first and second pairs of substantially matched strain sensing resistors bonded to the opposite faces of the bending beam adjacent the opposite ends of the beam and connected together electrically to form a balanced Wheatstone bridge,
(e) a scale base member,
(f) a scale load receiving member,
(g) means for securing one of the cantilever blocks to the base member with the bending beam and flexure strap extending angularly upward therefrom, and
(h) means for securing the other cantilever block to the load receiving member for supporting the latter for movement toward and away from the base member.

4,300,646
ELECTROMAGNETICALLY COMPENSATING PRECISION SCALE WITH FLEXURE FOR THERMAL EXPANSION
Franz-Josef Melcher, Hardegsen; Christoph Berg, Adelebsen, and Erich Knothe, Boveden, all of Fed. Rep. of Germany, assignors to Sartorius GmbH, Fed. Rep. of Germany
Filed Sep. 27, 1979, Ser. No. 79,529
Claims priority, application Fed. Rep. of Germany, Oct. 5, 1978, 7829724[U]
Int. Cl.³ G01G *7/00, 3/18, 3/08, 21/28*
U.S. Cl. 177—212 6 Claims

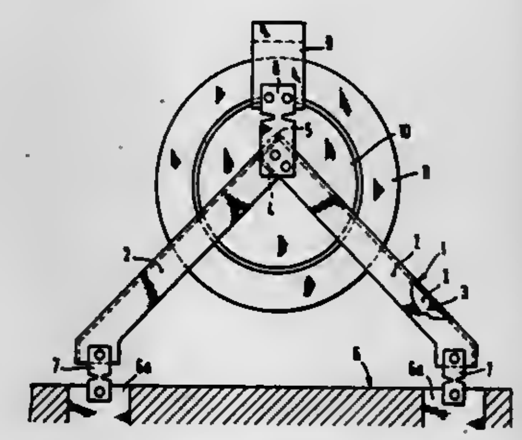

1. In an electromagnetically compensated precision scale, provided with a housing, a load support, upper and lower parallel guides interconnected with the load support for parallel guided movement of the load support, the guides each comprising a one-piece elongate member, shaped to define a triangle in plan view, with a base formed by the housing and an apex connected to the load support; the improvement residing in the apex being formed by a joint on the guide having a vertically extending flexure axis, whereby inaccuracies of the scale due to thermal effects thereon are reduced.

4,300,647
ELECTROMAGNETIC FORCE COMPENSATION SCALE WITH TEMPERATURE COMPENSATION
Erich Knothe, Bovenden; Franz-Josef Melcher; Jürgen Ober, both of Hardegsen, and Lothar Behrend, Gleichen/Diemarden, all of Fed. Rep. of Germany, assignors to Sartorius GmbH, Fed. Rep. of Germany
Filed Jul. 23, 1980, Ser. No. 171,292
Claims priority, application Fed. Rep. of Germany, Jan. 24, 1980, 3002462
Int. Cl.³ G01G *7/00, 3/14*
U.S. Cl. 177—212 13 Claims

1. A scale according to the principle of electromagnetic force compensation, comprising:
a stationary permanent magnet system having an air gap;
a position sensor for sensing position of the scale;
circuit means connected with the position sensor, and including a control amplifier;
at least one coil positioned in the air gap of the stationary permanent magnet system and acted upon, via the position sensor and the control amplifier, by a compensation direct current dependent on the load of the scale;
said circuit means including an analog/digital converter and a measuring resistor, the same compensation direct current, flowing through the measuring resistor and at both ends of which a signal dependent on the load of the scale is tapped and fed to the analog/digital converter; and
further electric circuits which permit an alternating current to flow, in addition to the compensation direct current, through the coil and the measuring resistor, and including

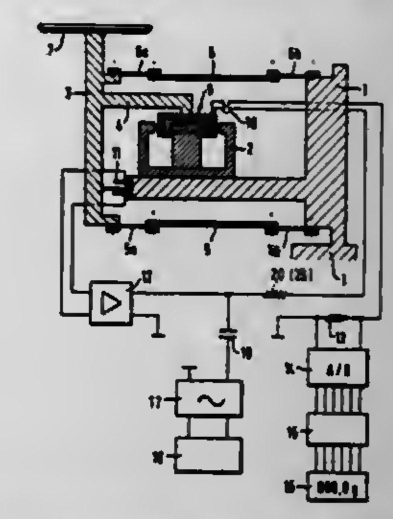

a regulating device which modifies the amplitude of the additional alternating current in such a manner that the joulean heat generated in the coil and in the measuring resistor by the compensation direct current and by the additional alternating current is at least approximately load-independent.

4,300,648
MASS AND FORCE METER
Mario Gallo, and Johannes Wirth, both of Zurich, Switzerland, assignors to Wirth, Gallo & Co., Zurich, Switzerland
Filed Aug. 21, 1979, Ser. No. 68,528
Claims priority, application European Pat. Off., Mar. 24, 1979, 79100900
Int. Cl.³ G01G *3/08*
U.S. Cl. 177—229 5 Claims

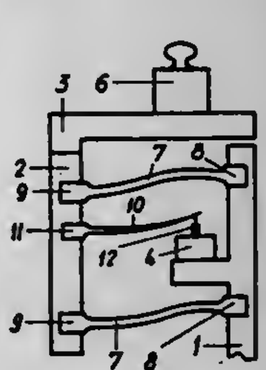

1. In a mass and force meter, a frame, a load support, means for parallel and vertical guidance of said load support and substantial load counter-acting, a rigid measuring system with a load cell, a transmission element, made from a resilient material, transmitting only the remaining part of the mass or the force to be measured not counter-acted by said means directly to said load cell, said means comprising at least two flat springs mounted each in a separate plane, said planes lying one above the other and being at least substantially parallel to each other, said flat springs having two ends, said ends being fitted in said frame and in said load support.

4,300,649

ENGINE MOUNTING STRUCTURE FOR VEHICLES

Mamoru Sakata, Oizumigakuenmachi, Japan, assignor to Honda Giken Kogyo Kabushiki Kaisha, Tokyo, Japan

Filed Jan. 26, 1979, Ser. No. 6,568

Claims priority, application Japan, Feb. 7, 1978, 53-14039[U]

Int. Cl.³ B60K *5/04*

U.S. Cl. 180—55 **7 Claims**

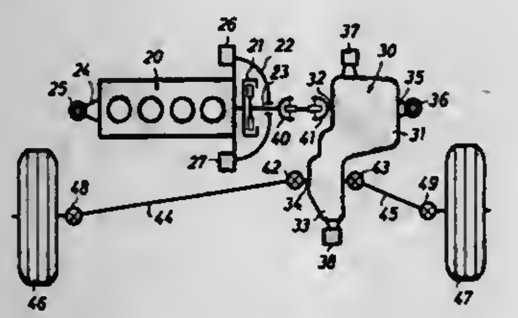

1. An engine mounting structure for a front-engine, front-drive or rear-engine, rear-drive vehicle wherein an output shaft of an engine extends substantially parallel to, and is spaced apart in the longitudinal direction of said vehicle from, an output shaft of a transmission, said output shaft of said transmission being directly connected to a pair of driving axles which are in turn respectively connected to a pair of traction wheels, comprising:

first and second rubber mount means for independently mounting said engine and said transmission, respectively, on the body of said vehicle;

said engine being disposed laterally relative to the body of said vehicle;

said transmission being disposed adjacent to said engine and separated from said engine;

said transmission being provided with an input shaft;

a universal joint interconnecting said output shaft of said engine and said input shaft of said transmission;

said first rubber mount means including at most three substantially resilient rubber mounts for supporting said engine on the body of said vehicle;

said first rubber mount means being disposed at at least front and rear ends of said engine;

said second rubber mount means including at most three substantially rigid rubber mounts for supporting said transmission on the body of said vehicle; and

said second rubber mount means being disposed at at least front and rear ends of said transmission.

4,300,650

MULTILEVEL POWER ASSISTED STEERING

Harold J. Weber, 20 Whitney Dr., Sherborn, Mass. 01770

Filed Dec. 10, 1979, Ser. No. 102,429

Int. Cl.³ B62D *5/08*

U.S. Cl. 180—142 **7 Claims**

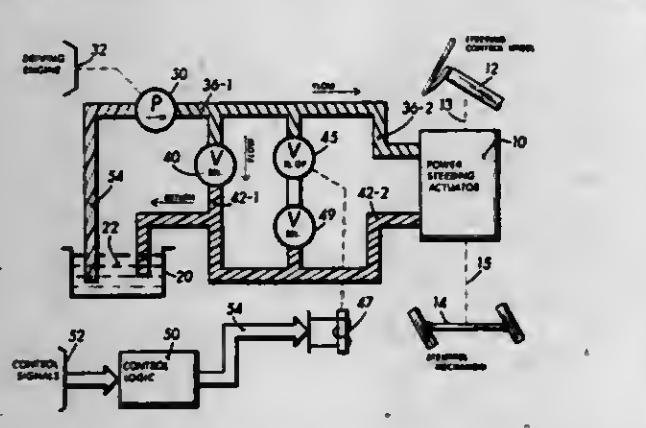

1. Multilevel power assisted steering system adapted for a vehicle which acts to provide the full mechanical advantage of such power assisted steering at low vehicle speed rates or when manuvering such vehicle in a nearly stationary situation, whilst decreasing the said power steering assist when the vehicle attains a greater speed rate value; comprising:

a. said vehicle having an engine and a steering means;

b. a pressure pump means provided with at least a pressure output, a suction input, and including a mechanical drive effectively coupled to said engine;

c. a servo actuator coupled effectively with said steering means and having an operator control, such as a steering wheel, coupled to a mechanical control input thereof, having a pressure input coupled to the pressure pump means output, and further having a pressure return output;

d. a reservoir means coupled essentially between the pressure pump means suction input and said servo actuator pressure return output and operative therewith to provide a supply of pressurizable substance;

e. a first regulating means effectively coupled between the pressure pump means pressure output and said reservoir means and operative to produce a value of first pressure as separately coupled to the pressure input of the said actuator;

said improvement provided by:

f. a second regulating means effectively coupled in parallel with the first regulating means, including an actuator valve coupled effectively in series with said second regulating means and upstream therefrom which serves to selectively enable and disable the said second regulating means effect, that being to produce a lower value of second pressure which supplants the said value of first pressure, as separately coupled to the pressure input of the said actuator; and,

g. control means having a receptible input for a certain plurality of vehicle status control signals, means for producing said status control signals including at least a signal representative of transmission gearing ratio selection, said control means producing an output signal which couples at least with the said actuator valve means and operates therewith for:

initially disabling the second regulating means whenever the gearing selection is in a less than about the highest speed transmission gear combination and the vehicle is effectively accelerating; effectively enabling the second regulating means whenever the gearing selection changes into about the highest speed transmission gear combination;

re-disabling the second regulating means whenever the gearing selection reverts into a lower speed transmission gear combination.

4,300,651

VEHICLE WHEEL MOUNTING AND DRIVING ASSEMBLY INCLUDING CONSTANT VELOCITY UNIVERSAL JOINT

Werner Krude, Neunkirchen, Fed. Rep. of Germany, assignor to Uni-Cardan AG, Siegburg, Fed. Rep. of Germany

Filed Jan. 15, 1980, Ser. No. 112,193

Claims priority, application Fed. Rep. of Germany, Jan. 29, 1979, 2903231

Int. Cl.³ B60K *17/30*

U.S. Cl. 180—256 **4 Claims**

1. A wheel mounting and driving assembly for the wheel of a motor vehicle comprising: a differential gear system through which power is delivered from drive means of said vehicle to said wheel; a first universal joint assembly adjacent said differential gear system; plug connection means connecting said first universal joint assembly with said differential gear system to be driven by said drive means of said vehicle, said plug connection means being constructed to enable said first universal joint assembly to be disconnected from said differential gear system by axially withdrawing said first universal joint assembly therefrom in the direction of said wheel; a second universal joint assembly in driven engagement with said first universal joint assembly; a bearing assembly rotatively mounting said wheel on said vehicle including an outer bearing ring supported on said vehicle and an inner bearing ring affixed with said wheel; said second universal joint assembly including an outer joint member arranged within an inner bore of said inner bearing ring and adapted to be placed in driving engagement therewith to transmit driving power to said wheel; gear teeth means extending in the axial direction of said wheel interconnecting said inner bearing ring and said outer joint member of said second universal joint assembly in direct driving engagement while permitting relative axial displacement therebe-

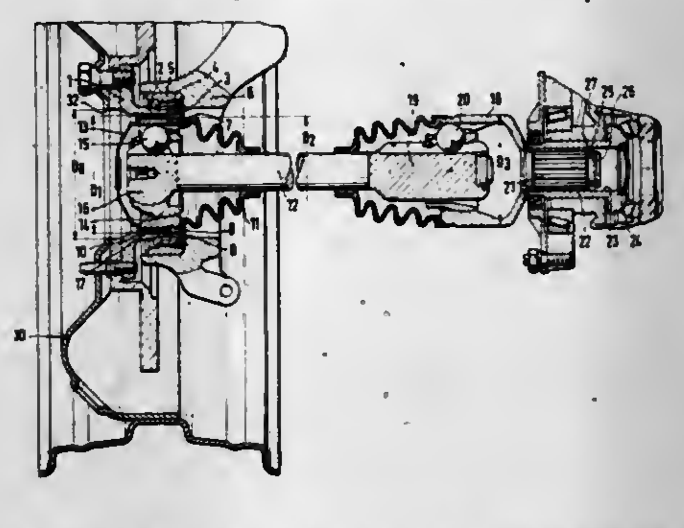

tween; and releasable locking means axially releasably locking said inner bearing ring and said outer joint member of said second universal joint assembly together; said wheel having a central bore with a diameter D_R which is larger than the outer diameter D_1 of said outer joint member of said second universal joint assembly, said inner bore of said inner bearing ring having a diameter D_2 which is larger than the outer diameter D_3 of the outer joint member of said first universal joint assembly; said mounting and driving assembly being thereby capable of disassembly from the exterior of said wheel.

4,300,652

SOFT SHIFT REVERSING CONTROL SYSTEM

Gilbert E. Redzinski, Niles; Donald N. Piane, Jr., St. Joseph, and Joseph R. Den Bleyker, Stevensville, all of Mich., assignors to Clark Equipment Company, Buchanan, Mich.

Filed Mar. 16, 1979, Ser. No. 21,052

Int. Cl.³ B60K *20/02*

U.S. Cl. 180—336 **15 Claims**

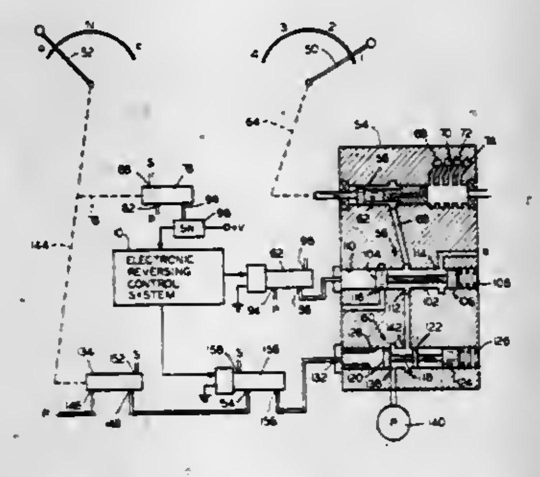

1. For use in a vehicle of the type having an engine coupled with traction wheels through a driveline including a change-speed transmission, said transmission including drive direction reversing means and direction selector means having a forward and reverse position, a drive reversing control system comprising a direction signal generator responsive to the position of said selector means for producing a direction command signal, first actuating means adapted to be connected with said reversing means and being responsive to the direction command signal, first gate means having a data input coupled with said direction signal generator, an output coupled with said first actuating means and having a clock input adapted to receive an inhibit signal, said first gate means being a storage gate means which produces on its output the state of the direction command signal applied to its data input in the absence of an inhibit signal on its clock input and which memorizes on its output the state of the direction command signal on its data input at the time an inhibit signal is applied to its clock input, a speed signal generator adapted to be connected with said driveline for producing a speed signal corresponding to the speed of the vehicle, inhibit signal means coupled with said speed signal generator for producing an inhibit signal only when said speed is above a predetermined value, said inhibit signal means being coupled with the clock input of the first gate means, whereby actuation of said reversing means is prevented when the vehicle speed is above said predetermined value.

4,300,653

SEISMIC SOURCE ARRAY FIRING CONTROLLER

Chung Van Cao, and Phillip W. Ward, both of Dallas, Tex., assignors to Texas Instruments Incorporated, Dallas, Tex.

Continuation of Ser. No. 736,967, Oct. 29, 1976, abandoned. This application Apr. 23, 1979, Ser. No. 32,596

Int. Cl.³ G01V *1/38*

U.S. Cl. 181—107 **8 Claims**

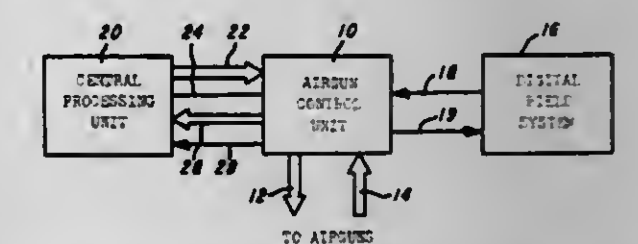

1. An automatic firing controller for an array of marine seismic sources comprising:

(a) a master counter for measuring the time delay between the triggering of the last source and the firing of the first source of said array;

(b) a phase counter for each source, for determining the time between said firing of the first source and the firing of the corresponding source, plus the time between the triggering of the corresponding source and the triggering of the last source, the contacts of the corresponding phase counter plus the contents of the master counter being a measurement of the gun delay of the corresponding source for a given shot in a sequence;

(c) means operable during the next shot in said sequence to cause said master and phase counters to begin counting, the contents of said counters at the initiation of counting being the same as at the instant the corresponding source fired on the immediately preceeding shot in the sequence; and

(d) means for triggering each source when the sum of the counts in the master counter and the corresponding phase counter have reached a preselected value.

8. A system for automatically firing the marine seismic sources of a seismic array in a predetermined sequence, the system comprising:

(a) first means for estimating the gun delays of the sources and for repeatedly updating the resultant estimate;

(b) second means responsive to the first means for selectively setting the triggering of the sources to correspond to the updated estimates, including means for determining travel time delays resulting from placement of said sources at varying depths;

(c) third means for detecting the occurrence of self-fire and no-fire conditions; and

(d) fourth means, responsive to the third means for automatically preventing a source from triggering when a self-fire condition is detected for that source.

4,300,654
UNDERSEA IMPLOSION DEVICE
Samuel O. Raymond, and Gary G. Hayward, both of Falmouth, Mass., assignors to Benthos, Inc., Falmouth, Mass.
Continuation of Ser. No. 665,234, Mar. 9, 1976, abandoned. This application May 21, 1980, Ser. No. 151,914
Int. Cl.³ G01V *1/38*
U.S. Cl. 181—120 **20 Claims**

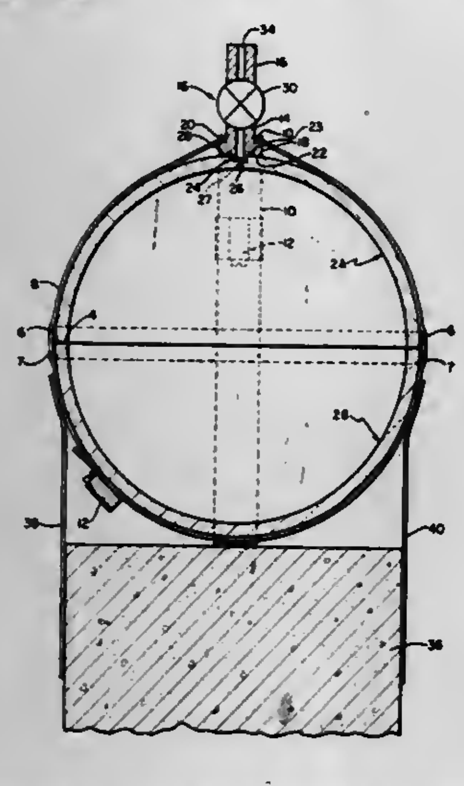

1. An implosion device for generating a pressure pulse in a deep body of water, said device comprising a hollow glass sphere, first means for causing the sphere to sink when dropped into the water, and second means including a deformation at the outer surface of said sphere for causing said sphere to implode when subjected to a hydraulic pressure which exceeds a predetermined magnitude.

4,300,655
ACOUSTIC DIAPHRAGM FOR SPEAKERS AND METHOD OF PRODUCING THE SAME
Naraji Sakamoto, Kawanishi; Shuji Saiki, Amagasaki; Kazue Sato, Kadoma; Kousaku Murata, Kobe, and Hiroshi Yamamoto, Katano, all of Japan, assignors to Matsushita Electric Industrial Co., Ltd., Osaka, Japan
Filed May 20, 1980, Ser. No. 151,649
Claims priority, application Japan, May 31, 1979, 54-68424
Int. Cl.³ H04R *7/08*
U.S. Cl. 181—167 **3 Claims**

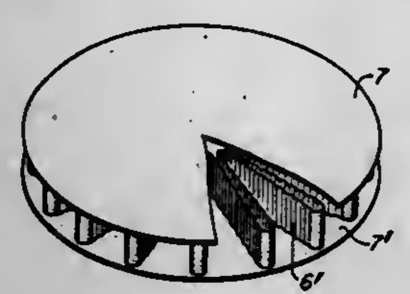

1. An acoustic diaphragm for speakers having a sandwich structure constituted by a core member made of an elongated web and surface members adhered to the upper and lower edges of said web, characterized in that said web is alternatingly and successively turned at radially inner and outer portions of said surface members to have portions projected radially outwardly.

4,300,656
MULTIPLE PURE TONE ELIMINATION STRUT ASSEMBLY
Frank W. Burcham, Lancaster, Calif., assignor to The United States of America as represented by the Administrator of the National Aeronautics and Space Administration, Washington, D.C.
Filed Sep. 11, 1980, Ser. No. 185,869
Int. Cl.³ B64D *33/02*
U.S. Cl. 181—214 **3 Claims**

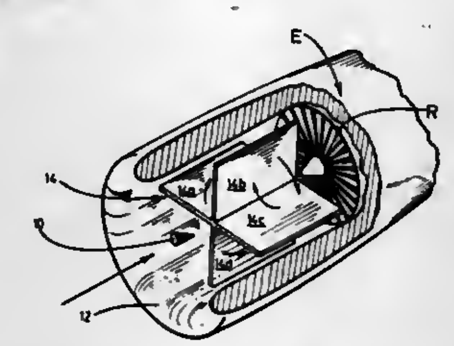

1. A pure-tone elimination assembly adapted to be mounted upstream from the air intake for a jet engine characterized by a bladed rotor having operational tip speeds in the supersonic range, whereby the engine is further characterized by a forwardly projected rotating field of multiple pure-tone noise at operational speeds, comprising:

A. a tubular cowl defining a duct for delivering an airstream axially into the air intake for said engine; and
B. a plurality of struts for disrupting the continuity of a rotating field of multiple pure-tone components of noise comprising a plurality of flat, plate-like members arranged in mutually intersecting planes and having a line of intersection coincident with the longitudinal axis of said cowl.

4,300,657
SCAFFOLD
H. Truett Thompson, 1821 Muse, Fort Worth, Tex. 76112
Filed Apr. 25, 1980, Ser. No. 143,595
Int. Cl.³ E04G *1/24, 1/28, 1/36*
U.S. Cl. 182—38 **9 Claims**

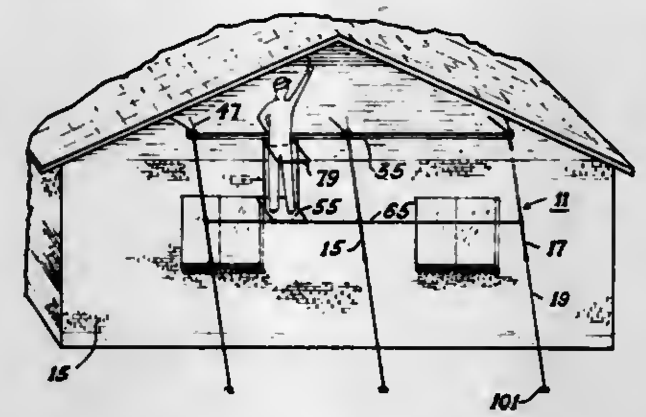

1. A scaffolding apparatus, comprising:
a pair of legs, each of the legs having telescoping means for varying its length;
a rail interconnecting the legs;
standoff means for supporting the apparatus against a building with the legs in an inclined position and with the rail spaced away from the building and in a horizontal position; and
a worker's platform carried by the rail below the rail for movement along the rail between the legs.

4,300,658
METERING VALVE FOR LUBRICATION AND SYSTEMS USING SAME
Zeo Asioli, 54, Via Fosdondo, Correggio (Reggio Emilia), Italy
Filed Jun. 5, 1979, Ser. No. 45,856
Claims priority, application Italy, Jun. 16, 1979, 40089 A/78
Int. Cl.³ F16N *25/02*
U.S. Cl. 184—7 E **9 Claims**

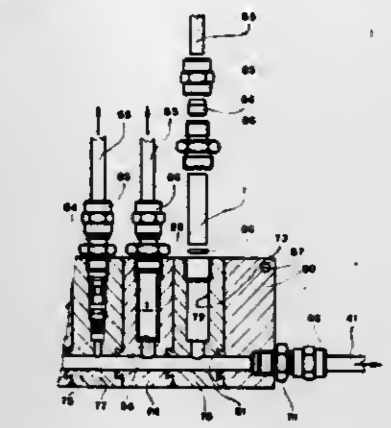

9. A distributor for passing lubricant to a plurality of lines via metering valves, said distributor comprising a plurality of side-by-side distributor elements each of said elements having a feeding bore and a derivational bore transversal to it, flat side surfaces of said elements forming flanks respectively equipped with fixed dovetail means, one with a male dovetail and the other with a female dovetail, each said element being transversed by a longitudinal feeding bore, each said male dovetail being equipped on its face around said longitudinal feeding bore with an oil ring against a respective corresponding female dovetail of that one of said distributor elements to which it is adjacent.

4,300,659
FOUR-POST HOIST
Thomas R. Silverstrand, 1310 N. 20th St., Lincoln, Nebr. 68503
Filed Mar. 17, 1980, Ser. No. 130,996
Int. Cl.³ B66F *7/00*
U.S. Cl. 187—8.59 **18 Claims**

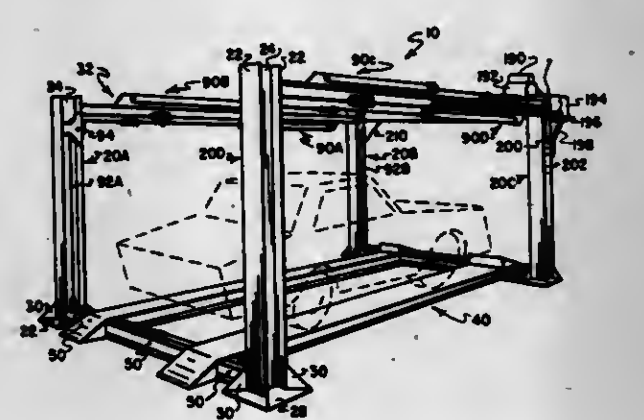

1. A hoist for lifting vehicles such as automobiles, trucks, and so forth, comprising:
at least four vertically extending posts, the posts defining a quadrilateral, one post being placed at each corner of the quadrilateral;
a lifting frame having portions positioned within the quadrilateral, the lifting frame being engageable with portions of a vehicle so as to raise and lower the vehicle, the lifting frame being vertically slidably connected to each of the posts;
a first brace extending between and connected to a given pair of posts, a second brace extending between and connected to the other pair of posts, the braces, when viewed from above, being parallel with each other and lying generally along the boundary of the quadrilateral defined by the posts, the braces being connected to the posts toward the upper end of the posts;
a plurality of drive means for raising and lowering the lifting frame, a separate drive means being provided for each corner of the lifting frame and being connected to each corner of the frame by means of a different one of first, second, third and fourth flexible connections two drive means being secured to the first brace and two driving means being secured to the second brace, and said flexible connections being movably supported by corresponding one of said vertically extending posts near the top of the corresponding post between the two ends of the flexible connection.

4,300,660
ELEVATOR DOOR MOTION REVERSAL
Charles F. Schoenmann, Somers, Conn., and J. Mark Deric, Johnson City, Tenn., assignors to Otis Elevator Company, Hartford, Conn.
Filed Dec. 27, 1979, Ser. No. 107,692
Int. Cl.³ B66B *13/08*
U.S. Cl. 187—29 R **3 Claims**

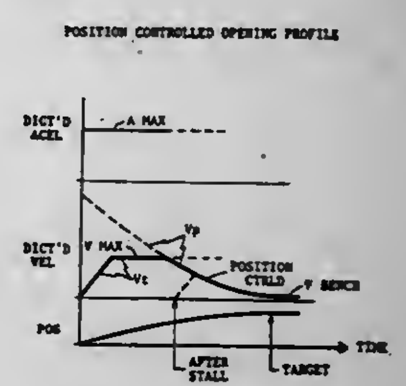

1. Elevator door apparatus, comprising:
a motor driven elevator door mechanism;
demand means for providing signals indicative of demands to open, close or reverse the direction of said elevator door when closing;
position means providing signals related to the position of said elevator door; and
control means for controlling said elevator door mechanism in response to said demand signals and said position signals; characterized by:
said position means comprising a transducer for providing signals which vary as a function of the position of said door mechanism; and
said control means comprising signal processing means responsive to said transducer for providing a signal indicative of the velocity of said door, for providing, in response to said demand means, motion command signals to said elevator door mechanism in response to the difference between said door velocity signal and a dictated door velocity signal, and for providing said dictated door velocity signal in response to a signal from said demand means indicating demand for a door reversal concurrently with a signal indicating that the commanded door motion direction is closing, as the present dictated velocity incremented by a reverse acceleration equal to the square of the initial door velocity divided by twice the distance within which it is desired for the door to stop after a reversal demand.

4,300,661
ELEVATOR DOOR STALL MODE WITH HYSTERESIS
Michael W. Hmelovsky, Warehouse Point, Conn., assignor to Otis Elevator Company, Hartford, Conn.
Filed Dec. 27, 1979, Ser. No. 107,674
Int. Cl.³ B66B *13/08*
U.S. Cl. 187—29 R **3 Claims**

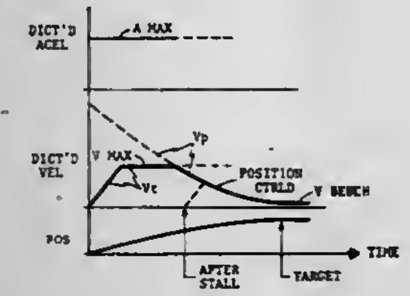

1. Elevator door apparatus, comprising:
a motor driven elevator door mechanism;
demand means for providing signals indicative of demands to open or close said elevator door;
position means providing signals related to the position of said elevator door; and
control means for controlling said door mechanism in response to said demand signals and said position signals; characterized by:
said position means comprising a transducer for providing signals which vary as a function of the position of said door mechanism; and
said control means comprising cyclically operative signal processing means for providing, in response to said transducer, signal indications of the position and velocity of said door, and, in response to said demand means and said position and velocity signal indications, for controlling said door in either a motion mode of operation or a stall mode of operation, and, when operating in said motion mode of operation, for providing a dictated door motion control signal to effect desired motion of the door in response to said position and velocity signal indications and providing driving signals to said door mechanism in response to the difference between said signal indications and said door motion control signal, and, when operating in said stall mode of operation, providing driving signals to said door mechanism to provide a desired force on said door, for comparing said velocity signal indication with a signal indicative of a predetermined stall velocity, for operating in said motion-mode of operation when the velocity of said door is greater than said predetermined stall velocity, and for operating in said stall mode of operation when said door velocity is less than said predetermined stall velocity for a predetermined hysteresis interval of time.

4,300,662
ELEVATOR DOOR MOTOR COMPENSATIONS
Michael W. Hmelovsky, Warehouse Point, Conn., assignor to Otis Elevator Company, Hartford, Conn.
Filed Dec. 27, 1979, Ser. No. 107,700
Int. Cl.³ B66B *13/08*
U.S. Cl. 187—29 R **5 Claims**

1. Apparatus for operating the door of an elevator car mounted in a hoistway and serving a plurality of landings in a building, each landing having a hoistway door which is engaged and moved by the elevator door when the car is at the corresponding landing, comprising:
a motor driven elevator door mechanism;
demand means for providing signals indicative of demands to open or close said elevator door;
position means providing signals related to the position of said elevator door; and
control means for controlling said door mechanism in response to said demand signals and said position signals; characterized by:
said position means comprising a transducer for providing signals which vary as a function of the position of said door mechanism; and
said control means comprising cyclically operative signal processing means for providing, in response to said transducer, signal indications of the position and velocity of said door, and, in response to said demand means and said position and velocity signal indications, for providing, in each of a series of cycles during door traverse, an error command signal in response to the difference between said

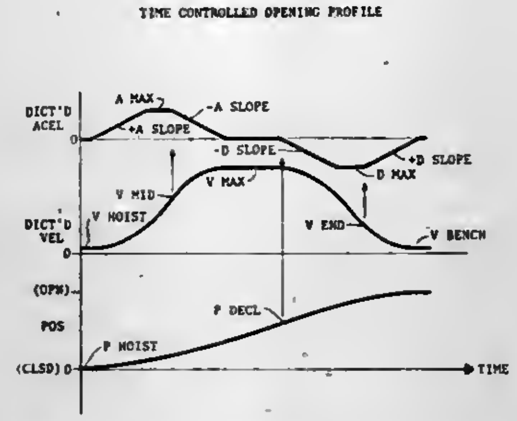

door velocity signal indication and a dictated door velocity signal provided in each cycle to equal the velocity which the door is desired to have during such cycle in accordance with a desired door traverse velocity profile, for providing a hoist position signal indicative of the position of said door at which it engages a hoistway door at a landing, for comparing said position signal indication with said hoist position signal, for providing in each of said series of cycles in which the door is in engagement with a hoistway door, a spirator compensation command signal which is substantially equal in magnitude and opposite in effect to the effect of the hoistway door spirator on the motion of said door, and for providing, in each of said cycles, a motion command signal to said elevator door mechanism in response to said error command signal and said spirator compensation command signal.

4,300,663
ELEVATOR DOOR MOTION MODE CONTROL
Michael W. Hmelovsky, Warehouse Point, and John E. Games, Granby, both of Conn., assignors to Otis Elevator Company, Hartford, Conn.
Filed Dec. 27, 1979, Ser. No. 107,804
Int. Cl.³ B66B *13/08*
U.S. Cl. 187—29 R **7 Claims**

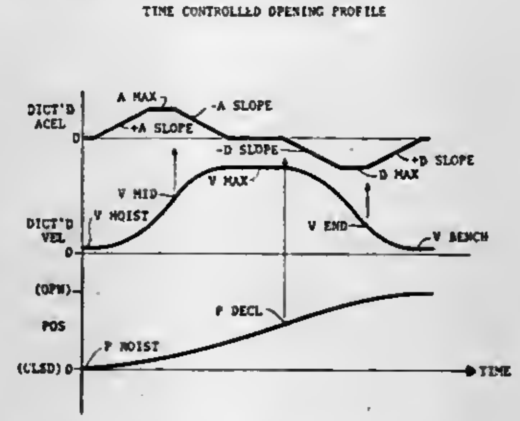

1. Elevator door apparatus, comprising:
a motor driven elevator door mechanism;

demand means for providing signals indicative of demands to open or close said elevator door;
position means providing signals related to the position of said elevator door; and
control means for controlling said door mechanism in response to said demand signals and said position signals; characterized by:
said position means comprising a transducer for providing signals which vary as a function of the position of said door mechanism; and
said control means comprising cyclically operative signal processing means for providing, in response to said transducer, signal indications of the position and velocity of said door, and, in response to said demand means and said position and velocity signal indications, for controlling said door in accordance with two different modes of operation, for controlling said door in a first one of said modes of operation by providing, in each of a series of cycles throughout a period of time equal to the desired door traverse time, a dictated door velocity signal equal to the velocity which the door is desired to have during such cycle in accordance with a desired door traverse velocity profile derived from values of desired rates of acceleration and deceleration and desired maximum velocity, acceleration and deceleration, for controlling said door in the second one of said modes of operation by providing a first velocity signal as an increase at a predetermined acceleration from a negligible door velocity to a predetermined maximum velocity, for providing a second velocity signal as a function of the difference between the present position of the door indicated by said signal indication of the position of the door, and providing said dictated velocity signal as the lower valued one of said first and second velocity signals, said signal processing means when operating in either of said modes of operation providing motion command signals to said elevator door mechanism in response to the difference between said dictated door velocity signal and said door velocity signal indication, said signal processing means operating in said first mode in response to signals from said demand means and said position means indicating that said door is to make a complete traverse, from being fully open to being fully closed, or vice versa, and otherwise operating in said second mode.

4,300,664
LOCKING DEVICE
James D. Helm, and Walter G. Gellerson, both of Yakima, Wash., assignors to Decoto Aircraft, Inc., Yakima, Wash.
Continuation of Ser. No. 963,844, Nov. 27, 1978, abandoned. This application Oct. 1, 1979, Ser. No. 80,995
Int. Cl.³ F16D *65/22, 51/12*
U.S. Cl. 188—265 **13 Claims**

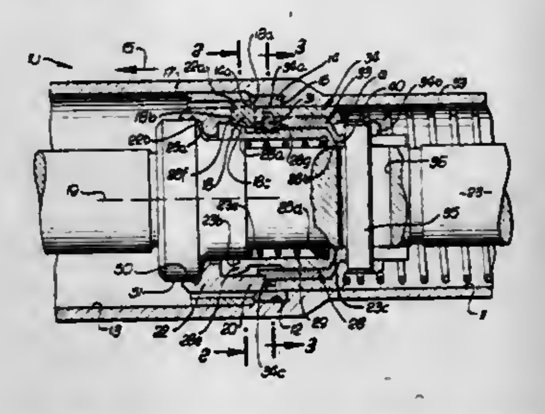

1. In a mechanical locking device having an axis, the combination comprising
(a) main lock means blocking axial travel of a load exerting component, and being generally radially movable to unblock said axial travel,
(b) holder means blocking said general radial movement of the main lock means, and being axially movable to unblock said generally radial movement of the main lock means,
(c) triggering means blocking said axial movement of the holder means, and being generally radially movable to unblock said axial movement of the holder means,
(d) release structure blocking said generally radial movement of the triggering means, and being movable to unblock said generally radial movement of the triggering means,
(e) at least one of said main lock means and said triggering means comprising multiple elements spaced about said axis for independent radial movement, said elements comprising circularly spaced segments which extend arcuately about said axis,
(f) and a retainer defining slots spaced about said axis and in which said elements are positioned for said independent radial movement thereof.

4,300,665
SWITCH DEVICE FOR SELF-RETRACTING CORD REEL
John C. Arechaga, Lansdale, Pa., assignor to Ametek, Inc., New York, N.Y.
Filed Apr. 25, 1980, Ser. No. 143,795
Int. Cl.³ H02G *11/02*
U.S. Cl. 191—12.4 **3 Claims**

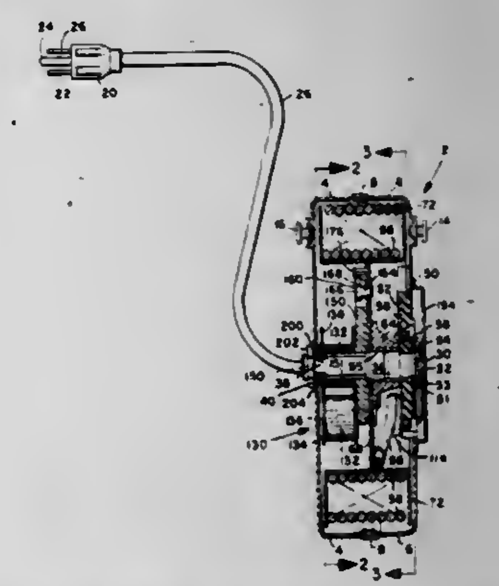

1. In a self-retracting cord reel having a rotating drum with a hub mounted for rotation on an arbor, an electrical cord having a portion thereof wound on the drum, a ratchet secured to the arbor, a pawl having a slot engaged by a pin secured to the hub, a spring urging the pawl inwardly at a point over the center of the slot for pivoting the pawl about the pin when the pawl is moved by engagement with the ratchet to shift the pin from one end of the slot to the other end of the slot and then released from the ratchet for shifting the pawl between a stop position and a rewind position and means to move the pawl to shift the pin from said other end of the slot to said one end of the slot at the commencement of unwinding the cord to cause the spring to place the pawl in the stop position to engage the ratchet when the reel starts to rewind the cord, the improvement comprising:
a switch biased to the open position in series with the cord secured to the hub,
a switch operating member adapted to be engaged by the pawl for closing the switch when the pawl is in the stop position.

4,300,666
CURRENT COLLECTING MEANS IN AN AERIAL CABLEWAY SYSTEM
Masaaki Taniguchi; Shinji Nakata, both of Yokohama, and Susumu Ueki, Tokyo, all of Japan, assignors to Nissan Motor Company, Limited, Japan
Filed Jul. 19, 1979, Ser. No. 58,772
Claims priority, application Japan, Aug. 7, 1978, 53-108130[U]
Int. Cl.³ B60M *1/34*
U.S. Cl. 191—23 A **4 Claims**

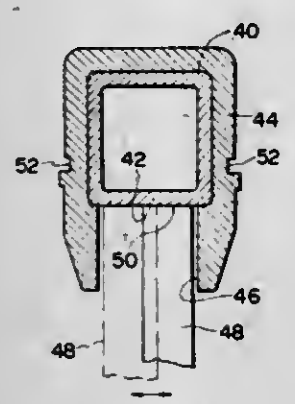

1. In an aerial cableway system of the type which includes a supporting cable; at least a pair of current-carrying cables disposed substantially parallel to one another and to the supporting cable; a bracket for supporting said current-carrying cables on opposite sides of the supporting cable, said bracket including insulators disposed between the supporting cable and the current-carrying cable; a self-propelled carriage suspended from the supporting cable which includes grooved drive wheels which ride on the supporting cable, said carriage being driven by electrical driving means; and current collecting means carried on said carriage and disposed in sliding contact with each of said current-carrying cables to supply power to said electrical driving means; an insulating holder for holding each current-carrying cable secured to the supporting cable, said insulating holder defining a bottom-opening cavity for receiving said current collecting shoe therein; said current collecting shoe having a lateral dimension less than the width of the cavity to permit the shoe to slide smoothly in contact with the current-carrying cable therein along curved portions of the current carrying cable, the improvement wherein said current carrying cable is characterized as having at least a lower planar surface, said cable being secured in an upper portion of said holder; and said current collecting shoe is characterized as having a planar upper surface in contact with said lower planar surface of said current-carrying cable.

4,300,667
AUTOMATIC LOCKING CLUTCH
Mark J. Fogelberg, Muncie, Ind., assignor to Borg-Warner Corporation, Chicago, Ill.
Continuation of Ser. No. 868,587, Jan. 11, 1978, abandoned. This application Jun. 15, 1979, Ser. No. 49,004
Int. Cl.³ F16D *11/00*; B60K *17/34*
U.S. Cl. 192—36 **13 Claims**

1. In a clutch for effecting engagement between rotatable driving and driven members in response to rotation of the driving member, said clutch incorporating first and second clutching means respectively rotatable with said driving and driven members, said first clutching means being movable relative to the driving member into and out of engagement with said second clutching means, means yieldably biasing said first clutching means away from engagement with said second clutching means, and actuating means for said clutch; the improvement wherein said actuating means comprises rotatable cam means, means responsive to rotation of the driving member for developing relatively high and low forces tending to retard rotation of said cam means, means for rotating said cam means with said first clutching means in opposition to said relatively high force, cam follower means cooperable with said cam means for moving said first clutching means toward engagement with said second clutching means in response to said rotation of said cam means in opposition to said relatively high force, said force developing means being constructed and

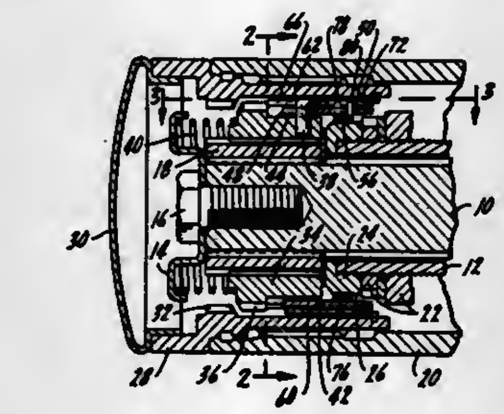

arranged to develop said relatively low force when said first and second clutching means are in engagement, and means for rotating said cam means with said first clutching means in opposition to said relatively low force when said first and second clutching means are in engagement.

4,300,668
SYNCHROMESH DEVICE FOR A TRANSMISSION OF AN INDUSTRIAL TRUCK
Koji Nozawa, Higashikurume; Norio Takegami, Hamamatsu; Yukio Mizukoshi, Yokohama, and Mitsuo Ikkatai, Ohme, all of Japan, assignors to Nissan Motor Co., Ltd., Yokohama, Japan
Filed Jul. 16, 1979, Ser. No. 57,849
Claims priority, application Japan, Jul. 20, 1978, 53/87743
Int. Cl.³ F16D *23/06*
U.S. Cl. 192—53 F **1 Claim**

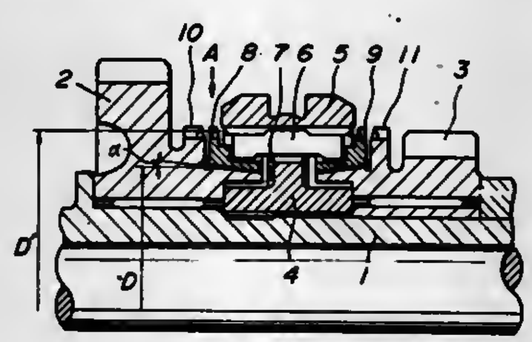

1. In a synchromesh device for a transmission of an industrial truck including conical synchronizing slide surfaces whose contact frictional force performs a synchronizing operation, the improvement comprising the conical surfaces including conical angles of more than 10° but less than 11°.

4,300,669
CUSHION FINGER DIAPHRAGM SPRING CLUTCH
Vance D. Browne, Arlington Heights, Ill., assignor to Borg-Warner Corporation, Chicago, Ill.
Filed Oct. 15, 1979, Ser. No. 84,497
Int. Cl.³ F16D *13/71*
U.S. Cl. 192—89 B **6 Claims**

1. In a vehicle clutch having a cover secured to a flywheel, a clutch disc and an axially reciprocable pressure plate within the cover, the pressure plate adapted to engage the clutch disc with the flywheel and having a generally annular fulcrum surface engageable by a diaphragm spring pivotally mounted in said cover, the improvement comprising a plurality of circumferentially equally spaced cushioning fingers integral with and located on the periphery of the diaphragm spring, the cushioning fingers adapted to extend outwardly beyond the fulcrum surface and engage the pressure plate prior to engage-

ment of the spring with the fulcrum surface to cushion the engagement of the clutch.

4,300,670
VIBRATION DAMPER FOR A FRICTION CLUTCH
Thomas P. Mathues, Miamisburg, Ohio, assignor to General Motors Corporation, Detroit, Mich.
Continuation-in-part of Ser. No. 56,775, Jul. 11, 1979, abandoned. This application Mar. 10, 1980, Ser. No. 129,123
Int. Cl.³ F16D *3/68*
U.S. Cl. 192—106.1 **6 Claims**

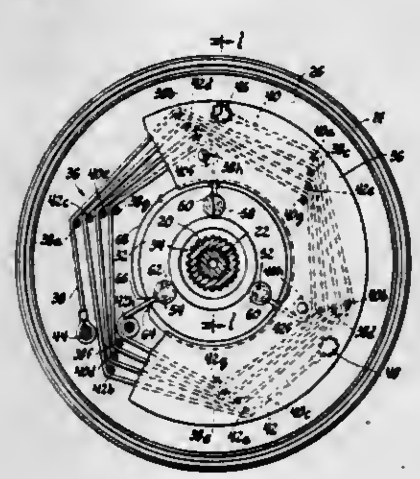

1. A vibration damper for a torque converter clutch having an input pressure plate member and an output hub, said damper comprising; a disc member axially spaced from said input pressure plate member; a plurality of equally spaced input anchor means secured between said input pressure plate member and said disc member adjacent the outer periphery of said disc member; a plurality of equally spaced output anchor means secured to said output hub; a plurality of elastomeric band members each having one end connected to respective input anchor means and another end connected to respective output anchor means; and guide means for each of said elastomeric band members disposed between said input pressure plate member and said disc member for guiding said elastomeric band members between said input anchor means and said output anchor means.

4,300,671
BAND SAW MACHINE
George N. Bliss, 1613 Emerald, Milton, Wash. 98354
Division of Ser. No. 825,703, Aug. 18, 1977, Pat. No. 4,170,912. This application May 11, 1979, Ser. No. 38,416
Int. Cl.³ B65G *47/00*; B23D *55/00*
U.S. Cl. 198—345 **7 Claims**

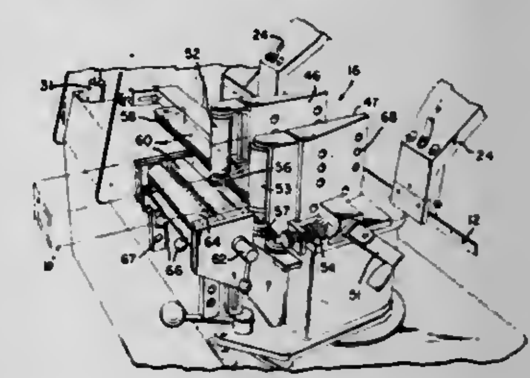

1. A workpiece clamping and feeding apparatus comprising:
a pair of opposed clamping surfaces having forward and rearward ends,
means for initially moving the clamping surfaces relative to one another for rough positioning of the clamping surfaces,
power driven feed means adjacent and coupled to the clamping surfaces for advancing and positioning the workpiece for cutting, and
final clamping surfaces moving means for moving the clamping surfaces relative to one another into final clamping engagement with the workpiece, said feed means including at least two opposed rollers, each adjacent a respective clamping surface, means rotating at least one of said rollers for advancing the workpiece, means pressing the rollers toward one another and beyond the clamping surfaces for engaging the workpiece independently of the clamping surfaces to advance the workpiece, said means pressing the rollers being retractable when said clamping surfaces engage the workpiece.

4,300,672
APPARATUS FOR FABRICATING TUBING
Barry C. Millar, Islington, and Keith W. Little, Georgetown, both of Canada, assignors to Bundy Corporation, Detroit, Mich.
Continuation of Ser. No. 816,074, Jul. 15, 1977, abandoned. This application Apr. 17, 1979, Ser. No. 30,763
Int. Cl.³ B65G *25/04*
U.S. Cl. 198—486 **11 Claims**

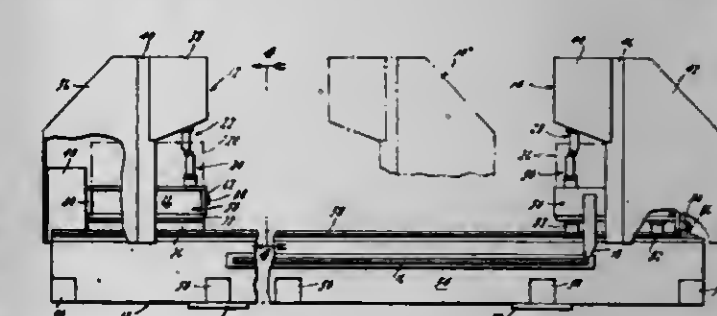

7. An apparatus for processing a plurality of pieces of tubing of a first predetermined length comprising:
a first machine module having an entrance end and an exit end;
a second machine module having an entrance end and an exit end, said second module being spaced from said first module a sufficient distance to permit one end of a piece of tubing of said first predetermined length to be disposed at said second module while the opposite end thereof is disposed at said first module, and movable with respect to

said first module to accommodate tubing of a second predetermined length;

a plurality of work stations disposed on one of said modules between said entrance and exit ends for performing work on said tubing in the vicinity of one end of said tubing; and

a transport apparatus on each of said modules for moving tubing in a direction transverse to the longitudinal axis of said tubing,

each said transport apparatus comprising means for engaging a single piece of tubing adjacent an end thereof while it is disposed in a supply of tubing in the vicinity of said entrance end and transporting said single piece of tubing to the module, and means for transporting said single piece of tubing across the module on which it is disposed sequentially into alignment with each of said work stations, and thereafter transporting said single piece of tubing to said exit end of the module, said transporting means comprising a pair of generally oscillating arms, an oscillating bridge member pivotably supported by said arms, and means carried on said bridge member for gripping said single piece of tubing adjacent an end thereof while it is being transported.

4,300,673
APPARATUS FOR TRANSFERRING MATERIAL BETWEEN CONVEYORS
Hans-Eckart Von Viebahn, and Helmut Truszczinski, both of Lünen, Fed. Rep. of Germany, assignors to Gewerkschaft Eisenhütte Westfalia, Fed. Rep. of Germany
Filed Oct. 15, 1981, Ser. No. 85,041
Claims priority, application Fed. Rep. of Germany, Nov. 9, 1978, 2848609
Int. Cl.³ B65G *37/00*
U.S. Cl. 198—611 **8 Claims**

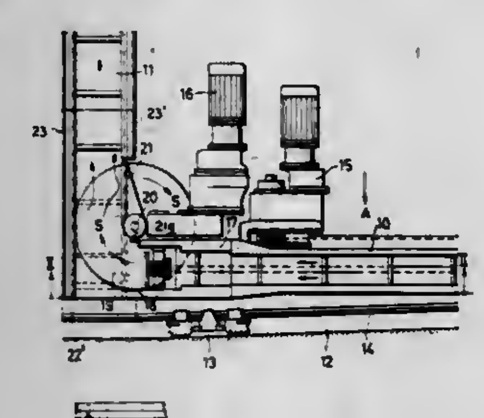

1. A mineral winning arrangement composed of a first mine face conveyor having a discharge zone, a second conveyor extending in a different direction to said first conveyor, apparatus for transferring material from the discharge zone of the first conveyor onto said second conveyor, said apparatus comprising a rotatably driven disc located beneath the discharge zone of said first conveyor and extending above said second conveyor, a drive station with drives mounted to a shiftable machine frame provided at the discharge zone of said first conveyor, a vertical bearing spindle supported by the machine frame and carrying the disc, the spindle and the disc being driven from one of said drives, a scraper extending over the upper surface of the disc to terminate at or near an inner side of the second conveyor nearest the first conveyor and a curved guard plate fitted to an outer side of the second conveyor to prevent lateral spillage of material.

4,300,674
ANTI-THEFT FINGER-RING DISPLAY DEVICE
Richard F. Davet, Beachwood, Ohio, assignor to Ringo Manufacturing Co. Inc., Cleveland, Ohio
Filed Jan. 21, 1980, Ser. No. 113,527
Int. Cl.³ B65D *1/34;* **E05B** *73/00*
U.S. Cl. 206—45.14 **4 Claims**

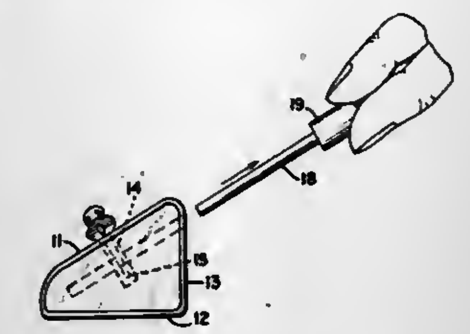

1. An anti-theft finger ring display device comprising a wedge-shaped ring support member for each ring having a base side, short side and hypotenuse side, said hypotenuse side having a transverse slot therein proximate the mid-length thereof for receiving the closed loop portion of at least one finger ring, said wedge-shaped support having a bore for each ring entering the short side and extending beyond the transverse slot, a ring retaining member of magnetically attractable material for each ring slidably receivable within said bore and extending from said short side to a point beyond said transverse slot adapted to pass through the closed loop portion of each finger ring to assure against unauthorized removal of the ring from said support, and magnetic means for attracting and axially withdrawing said ring retaining member from said support to permit authorized removal of said ring from said support.

4,300,675
BOX FOR CIGARETTES, CIGARS AND THE LIKE SMOKING UNITS
Hans-Ruedi Wagner, 25 Woodale La., Santa Barbara, Calif. 93103
Continuation-in-part of Ser. No. 140,773, Sep. 26, 1979, abandoned, which matured from PCT/CH79/00010, PCT filed Jan. 26, 1979, 102(e) date Sep. 26, 1979. This application Dec. 19, 1980, Ser. No. 218,130
Int. Cl.³ B65D *85/10, 85/12*
U.S. Cl. 206—252 **1 Claim**

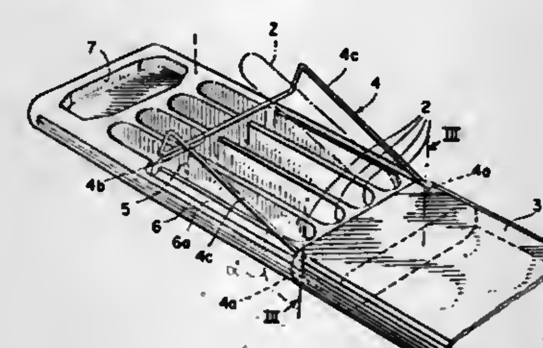

1. A box for cigarets, cigars or the like smoking units comprising an elongated body, having longitudinal grooves disposed parallel to and adjacent one another, each destined for receiving a single smoking unit therein, a slide cover displaceable in the direction of the longitudinal axis of the body, and a lifting hoop (or stirrup) of spring wire, having a transverse hoop portion and two legs being provided with bent free ends which are inserted in pivot holes in the longitudinal lateral sides of an end portion of the body, the said body further having a transverse groove across the longitudinal grooves near the ends of the latter away from the pivot holes of the body, which transverse groove is deeper than said longitudinal

grooves by at least as much depth as the wire of the said transverse hoop portion is thick, so as to receive the latter in said transverse groove in a position underneath the cigarets or the like smoking units positioned in said longitudinal grooves, when the cover is in closed position, while the free ends of the legs and the remainder of the legs are so bent relative to one another that the legs are sufficiently biassed as to lift the transverse hoop portion, and are inclined upwardly with the transverse portion of the hoop lifted above the region of the longitudinal grooves intersected by the transverse box groove and completely out of the latter, when the cover is correspondingly partially removed away from the front face of the box, exposing the region of said longitudinal grooves and said transverse groove therein.

4,300,676
PACK, MORE PARTICULARLY A CUBOID PACK, FOR CIGARETTES, SMALL CIGARS AND THE LIKE
Heinz H. Focke, and Kurt Liedtke, both of Verden, Fed. Rep. of Germany, assignors to Focke & Co., Verden, Fed. Rep. of Germany
Filed Dec. 11, 1979, Ser. No. 102,513
Claims priority, application Fed. Rep. of Germany, Dec. 16, 1978, 2854443
Int. Cl.³ B65D *85/10, 85/12*
U.S. Cl. 206—264 **21 Claims**

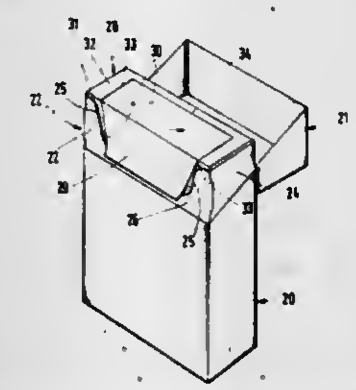

1. A cuboid pack for cigarettes, small cigars and the like, comprising a wrap (28) consisting of a thin packaging material, and an outer wrap; said outer wrap comprising a hinge-lid box including a collar (22) having a cut-out (25) formed therein; wherein a freely projecting tear-open tab (29) is formed by a material overlap, said overlap extending transversely across a front wall side (31) of said thin wrap (28) within the region of said cut-out (25), wherein a free edge portion of said tear-open tab rests upon an external portion of said collar, said tear-open tab adjoining a pull-off strip (30) extending upwardly from said cut-out.

4,300,677
ELECTRIC MOTOR SHIPPING CARTON
Arthur D. Szabo, Lima, Ohio, assignor to Westinghouse Electric Corp., Pittsburgh, Pa.
Filed May 28, 1980, Ser. No. 153,989
Int. Cl.³ B65D *81/02, 85/68*
U.S. Cl. 206—319 **6 Claims**

1. A motor and shipping carton combination comprising:

a motor having a frame and a shaft extending therefrom;

a folded carton having two side portions, a bottom portion, a top portion, and first and second end portions, all of which are folded from a unitary piece of packaging material, a first end portion comprising a first flap joined at a side edge thereof with one of said side portions, a second flap joined on part of a side edge thereof with the other of said two side portions, said second flap disposed inwardly and bonded to said first flap, and said second flap having a shoulder portion joined thereto at the lower edge thereof, said shoulder portion extending substantially parallel to said top and bottom portions and joined to a downwardly extending wall portion which in turn is joined to a support portion folded back under said shoulder portion and bonded to said bottom portion;

said motor frame being contained within and secured against substantial axial movement by said wall portion associated

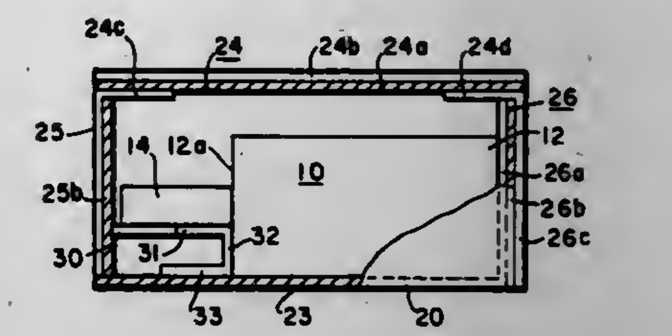

with said second flap of said first end portion and by said second end portion;

said motor shaft being disposed over said shoulder portion and kept by the restraint on said frame from contact with said second flap of said first end portion.

4,300,678
SYRINGE PACKAGE WITH EVIDENCE OF OPENING
Sandor Gyure, West Orange, and Joseph M. Szwarc, Cedar Grove, both of N.J., assignors to Becton, Dickinson and Company, Paramus, N.J.
Filed Apr. 7, 1980, Ser. No. 137,936
Int. Cl.³ B65D *83/10*
U.S. Cl. 206—364 **10 Claims**

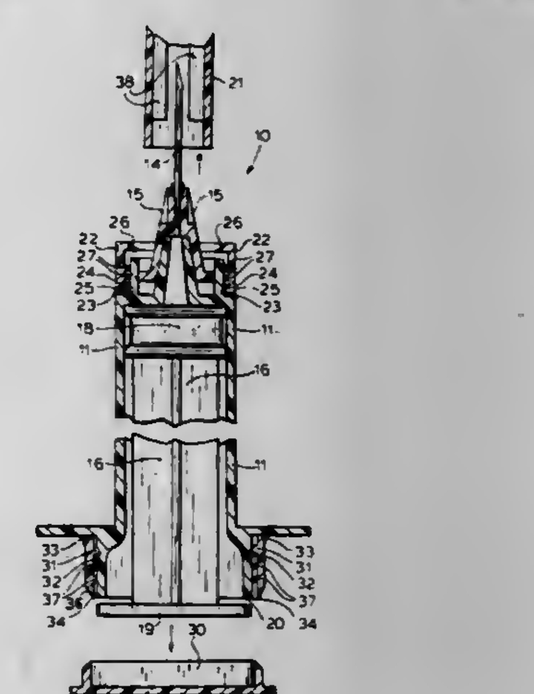

1. A syringe package comprising:

an elongated, hollow barrel;

a slidable plunger inside said barrel extending out of a proximal end of said barrel;

a needle cannula extending from a distal end of said barrel in fluid communication with the interior of said barrel;

a shield covering said cannula and connected to said barrel to provide a bacteria barrier, said shield having a frangible portion in an intermediate region thereof, whereby when the frangible portion is ruptured, a first portion of said shield is removable to expose said cannula and a second portion of said shield is adapted to remain connected to said barrel as evidence of a broken barrier; and

a cap covering the proximal end of said plunger and connected to said barrel to provide a bacteria barrier, said cap having a frangible portion in an intermediate region thereof, whereby when the frangible portion is ruptured a first portion of said cap is removable to expose said

plunger and a second portion of said cap is adapted to remain connected to said barrel as evidence of a broken barrier.

4,300,679
SELF LOCKING FOLDER
Steven J. Benzschawel, Carol Stream, and James F. Nauheimer, Chicago, both of Ill., assignors to Container Corporation of America, Chicago, Ill.
Filed Aug. 27, 1980, Ser. No. 181,862
Int. Cl.³ B65D 5/02
U.S. Cl. 206—424 2 Claims

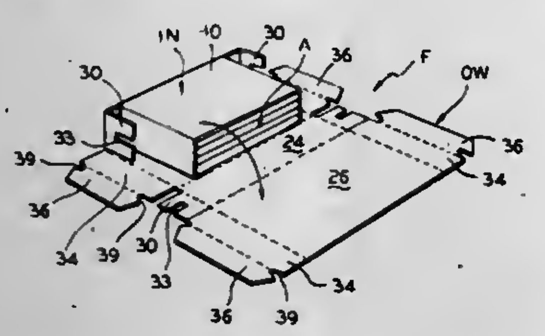

1. A self-locking, one-piece folder, for holding and transporting packaged articles such as books or the like, including integral inner and outer wrapper members, comprising:
(a) an inner wrapper member, for holding the packaged articles, comprising:
(i) a bottom panel;
(ii) a pair of end panels foldably joined to and upstanding from opposite end edges of said bottom panel;
(iii) a top panel including a pair of co-planer top panel sections foldably joined at their outer edges to upper edges of said end panels and extending inwardly therefrom in parallel relation with said bottom panel;
(b) an outer wrapper member integral with said inner wrapper member, for holding the latter, comprising:
(i) opposed pairs of minor and major side panels foldably joined to each other on parallel fold lines to form a tubular structure, open at the ends, for enclosing said inner wrapper member;
(ii) said side panels extending beyond the ends of said bottom panel with one of said minor side panels being foldably joined along one edge to an adjacent edge of said bottom panel;
(iii) each of said minor side panels having a pair of inner end flaps, foldably joined to opposite end edges thereof and having locking slots therein;
(iv) said end flaps being folded inwardly from their related minor side panels in parallel relation with but spaced from a related inner wrapper member end panel to define an air cell therewith;
(v) each of said major side panels having a pair of outer end flaps foldably joined to opposite end edges thereof;
(vi) said outer end flaps at each end of said outer wrapper member being folded toward each other in co-planer relation and each having foldably joined thereto a tuck flap folded inwardly therefrom and received within slots of related inner end flaps to provide an interlocking closure arrangement.

4,300,680
ARTICLE CARRIER
Charles L. Champlin, Rittman, Ohio, assignor to Packaging Corporation of America, Evanston, Ill.
Filed May 12, 1980, Ser. No. 149,022
Int. Cl.³ B65D 5/36, 5/46
U.S. Cl. 206—427 10 Claims

1. An article carrier convertible from a first mode for initially accommodating a plurality of articles arranged in a pair of substantially parallel rows, to a second mode for accommodating rows of articles subsequent to the articles being initially removed from the carrier when in the first mode; said carrier comprising a base panel for subtending and supportingly engaging the rows of articles; a pair of opposed upright end panels connected to first peripheral segments of said base panel for disposition adjacent corresponding end articles of the rows; a pair of opposed upright side panels connected to second peripheral segments of said base panel for disposition adjacent all of the articles of a row, said panels being in the same predetermined angular relation when said carrier is in either mode; and a hand-gripping unit spanning the distance between said upright end panels and interconnecting corresponding upper peripheral segments of said end panels, said unit including a top panel having a plurality of folding scores formed therein and defining a pair of elongated major sections connected to one another by a common folding score and arranged in side-by-side relation, and a pair of minor sections separated from one another by said major sections, each minor section having a

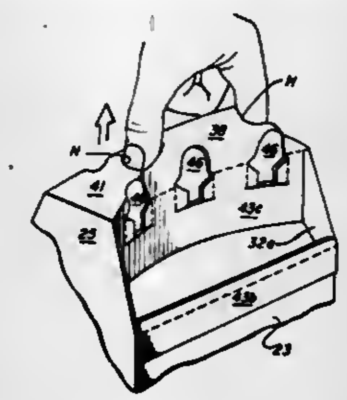

first peripheral segment foldably connected to the upper peripheral segment of an adjacent end panel, and second peripheral segments foldably connected to corresponding peripheral portions of said major sections, and a pair of opposed article-retaining flaps foldably connected to corresponding second peripheral portions of said major sections; when said carrier is in said first mode, said major and minor sections being disposed in substantially coplanar relation and said flaps extending outwardly and downwardly from said major sections and substantially overlying and concealing the article rows and having outer edge portions of said flaps secured to upper edge portions of the upright side panels; when said carrier is in said second mode, said major sections being folded relative to one another into substantially face-to-face relation and at least portions of said article-retaining flaps being separated from said side panels and disposed in substantially depending relation with the respective major sections and forming a pair of contiguous open top compartments, one for each article row when said carrier is in said second mode.

4,300,681
BOTTLE PACKAGE AND PACKAGING DEVICE
Mindaugas J. Klygis, Barrington, and Edward L. Benno, Grayslake, both of Ill., assignors to Illinois Tool Works Inc., Chicago, Ill.
Continuation of Ser. No. 47,436, Jun. 11, 1979, abandoned. This application Dec. 18, 1980, Ser. No. 217,720
Int. Cl.³ A65D 65/00
U.S. Cl. 206—428 10 Claims

1. A bottle package comprising a plurality of substantially identical bottles and a band, each of said bottles being shaped with a lower body section, a neck section and a shoulder portion extending between said body section and said neck section, said shoulder portion being generally frusto-conical of a progressively reducing circumferential dimension in an upward direction, and a cap section on the upper end of said neck section, said band comprising a tubular section of a resilient elastic plastics film material of less than approximately four mils thickness, said tubular section prior to cooperation with

said bottles comprising a flexible lay-flat tubular section of equal circumferential dimension longitudinally thereof between the open upper and lower ends thereof, said plurality of bottles arranged in a predetermined array in upstanding and side-by-side section contact, the array having predetermined circumferential dimensions in regions of the body sections, shoulder portions, neck sections and cap section of the bottles comprising the array, said equal circumferential dimension being greater than the greatest predetermined circumferential dimension of the array of bottles about any area of the cap sections and upper neck sections above said shoulder portions, said equal circumferential dimension of the tubular section in the unstretched condition further being substantially less than the smallest predetermined circumferential dimension of the array of bottles about any area of said body sections and at least the lower regions of said shoulder portions, said tubular section prior to cooperation with said bottles further having a length no greater than the vertical dimension between the bottom of one of said bottles and the upper end of said shoulder portion

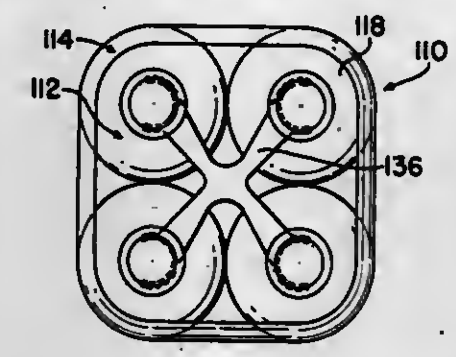

thereof and a length substantially greater than the vertical dimension between the bottom of one of said bottles and the upper end of said body section thereof, the upper edge extremity of the tubular section being located above the intersection of the shoulder portion and the cylindrical body section and said band being in highly stretched circumferential application about said array of bottles with the lower end of said band adjacent the bottom of said array and with the upper end on said shoulder portions of said bottles comprising the array, the tubular section creating an array conforming and unitizing member which is highly stretched about the cylindrical body sections as well as about the shoulder portions with the amount of stretch being less at the shoulder portions than at the body portions, said plastics material of said tubular section being bi-axially oriented with substantial molecular orientation in both the transverse and longitudinal directions of said tubular sections and in cooperation with said thickness of material producing a resiliency and elasticity causing said band to firmly and resiliently conform to the configuration of the bottle surface areas engaged by said tubular section.

4,300,682
BLISTER PACKAGE
Morris W. Kuchenbecker, Neenah, Wis., assignor to American Can Company, Greenwich, Conn.
Continuation-in-part of Ser. No. 40,100, May 18, 1979, Pat. No. 4,236,636. This application Jun. 23, 1980, Ser. No. 162,189
Int. Cl.³ B65D 83/00, 65/16, 75/58
U.S. Cl. 206—461 5 Claims

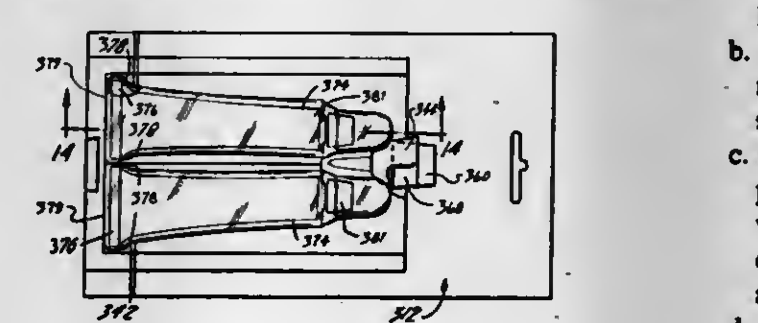

1. A blister package having an opening end defined thereon comprising: a backing board having an end disposed toward said package opening end; and a blister member, with a product-holding portion defined therein, secured to one surface of said backing board, said blister member having a peripheral flange extending thereabout, said package having contained therein a product having an enlarged portion, said blister being dimensioned and configured to interfere with said enlarged portion to inhibit movement of said product toward said opening end; said board having a hinge crease extending thereacross in a direction transverse to said package opening end in the area of said enlarged portion, and substantially between said enlarged portion and said opening end.

4,300,683
DISPLAY CARD
Harry Roccaforte, Western Springs, Ill., assignor to Champion International Corporation, Stamford, Conn.
Filed Jan. 3, 1980, Ser. No. 109,193
Int. Cl.³ B65D 5/50
U.S. Cl. 206—485 25 Claims

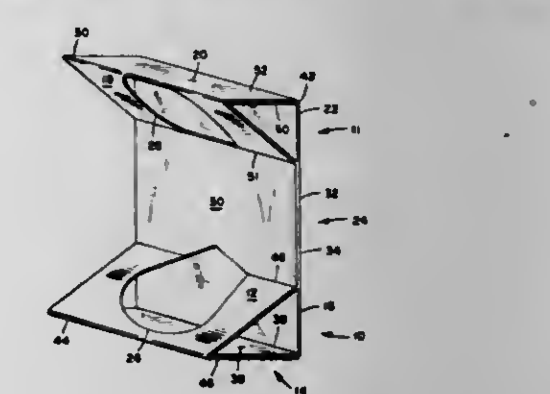

1. A display card constructed from a unitary blank comprising:
a. a base having the shape of a right triangle with a hypotenuse panel, a horizontal leg panel and a vertical leg panel, said base resting on said horizontal leg panel with said hypotenuse panel facing upwardly and outwardly,
b. a top having the shape of a right triangle with a hypotenuse panel, a horizontal leg panel and a vertical leg panel, said hypotenuse panel facing downwardly and outwardly,
c. a wall joining said top and base along said vertical leg panels, said wall including a front wall portion and a back wall portion hingedly connected along at least a portion of one side thereof, said wall portions superimposed over and attached to each other, and
d. an orifice in both the top and base hypotenuse panels in opposing relationship whereby a product may be secured in said orifices for display and protection purposes.

4,300,684
GLAZIERS POINT AND RETAINING MEANS
James D. Smith, Newington; Roger J. Salvas, Terryville, and Ralph B. Shaw, Manchester, all of Conn., assignors to The Fletcher-Terry Company, Farmington, Conn.
Filed Apr. 14, 1980, Ser. No. 140,242
Int. Cl.³ B65D *83/00;* **A47F** *7/00*
U.S. Cl. 206—493 **15 Claims**

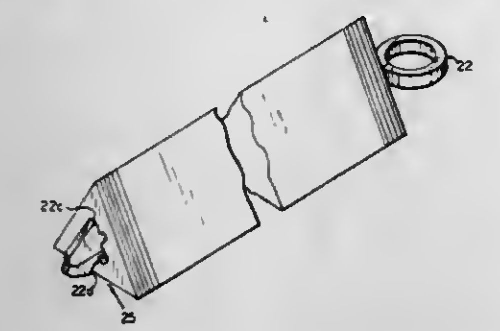

1. A glazier's point for use in wood to retain a glass pane in place for glazing, said point comprising a flat metal plate of multi-sided planform and defining an opening extending therethrough.

4,300,685
MULTIPLE PARTICLE PACKAGE AND METHOD
Walter Stern, Wilmette, Ill., assignor to Johns-Manville Corporation, Denver, Colo.
Filed Feb. 25, 1980, Ser. No. 124,177
Int. Cl.³ B65D *63/00, 63/10, 85/62*
U.S. Cl. 206—499 **9 Claims**

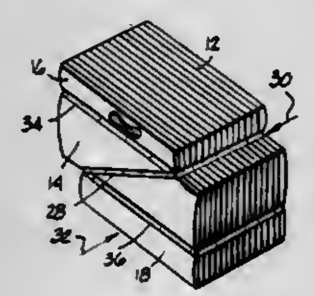

1. In a plurality of articles such as lenticular shaped folded basket beverage carriers packaged for shipment to a customer, the carriers being of the type having a central section, an upper offset handle section fixed to the central section and a lower offset bottom section fixed to the central section, the improvement comprising:
(a) a plurality of lenticular shaped articles positioned so that the upper offset handle sections are aligned together; and
(b) at least one tight band positioned around the plurality of lenticular shaped articles around the central section to form a diagonally positioned band between the upper offset handle section and the lower offset bottom section, the tight diagonally positioned band serving to form the plurality of articles in a tight lenticular shape bundle capable of carrying a predetermined amount of weight that may be applied thereto.

4,300,686
STACKABLE NESTABLE CONTAINER
Roland Leclerc, 5950 Normand St., St. Hubert, Canada Q3Y 1M3, and Owen Larkin, 188 Leeds Ave., Beaconsfield, Canada H9W 2H5
Filed Nov. 14, 1980, Ser. No. 206,853
Int. Cl.³ B65D *21/06*
U.S. Cl. 206—506 **3 Claims**

1. A container adapted to be stacked and nested with other like containers, comprising a generally planar base; a pair of opposite side walls, each upwardly and outwardly inclined rising from said base, and wherein their upper portions are vertically offset, said container being open at both ends; said base being formed of a plurality of longitudinally-extending spaced-apart and parallel rib members and a plurality of spaced-apart parallel cross-members secured to the underside of said rib member intermediate the ends thereof; further comprising on each side of said base an inner side rail turning inwardly and slightly downwardly at its opposite ends to form an inner transverse end member at each end of said base, said inner side rails and said inner transverse end members defining a continuous inner frame, said ribs being straight throughout their length and secured at their ends to the top side of each corresponding said inner end member; an outer side rail having opposite ends formed with a downwardly-opening arcuate indentation and curving upwardly and inwardly to form an

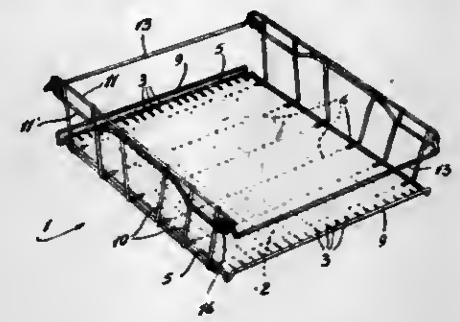

outer transverse end member disposed substantially parallel to, and at a higher level, than said inner transverse end member and at a higher level than, and outwardly spaced from the ends of said longitudinal rib member, said outer side rails and said outer transverse end members defining a continuous outer frame; said inner side rails being spaced slightly above said outer side rails by a distance equal to the thickness of one said cross-member, a pair of pivotable transverse bails movably secured at each end of said side walls adjacent the upper end portions thereof, wherein said bails can be moved from an outer inoperative position for nesting an upper-like container within said container to an inner operative position for stacking said upper container with said bails engaging the indentations of said upper container; each said side wall being provided with a central handle portion.

4,300,687
PACKAGING STRUCTURE
Jeffrey M. Gardner, Wheaton, and Bennie C. Nelson, Jr., Romeoville, both of Ill., assignors to Container Corporation of America, Chicago, Ill.
Filed May 5, 1980, Ser. No. 146,492
Int. Cl.³ B65D *85/18*
U.S. Cl. 206—279 **2 Claims**

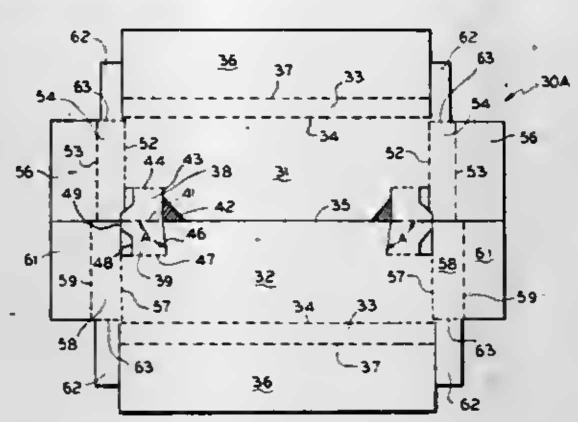

2. A container for hanger supported articles of clothing, said container being formed from a cut and scored blank of paperboard material and comprising:
(a) a bottom wall having end and side walls and a top wall;
(b) said bottom wall being formed from first and second panels separated by a cut line extending longitudinally thereof and joined at least at one end thereof by paired panel tabs;
(c) the panel tabs each being foldable with respect to an adjacent panel and each tab being joined to the other tab along a fold line;
(d) one of said panel tabs being defined by a cut line between the same and its adjacent panel and extending normal to the longitudinal cut line between the panels;
(e) the other of said panel tabs being defined by a cut line between the same and its adjacent panel and extending other than normal to the longitudinal cut line, so that the included angle at the fold line between the other panel tab at the longitudinal cut line and at said last named cut is slightly greater than 90°.
(f) said first and second panels being movable to overlapping position with said panel tabs being folded to erect position into facing relationship, the normal extending cut line of the overlapping panel having the edge thereof in frictional engagement with the edge of the other panel tab as defined by the cut line defining an angle other than 90°.

4,300,688
COMPACT MERCHANDISING PACKAGE OF A FLEXIBLE GARMENT BAG AND COLLAPSIBLE HANGER
Wallace London, 641 S. Monroe St., Baltimore, Md. 21223, and Kurt L. Meyer, Ellicott City, Md., assignors to Wallace London, Baltimore, Md.
Filed Apr. 16, 1980, Ser. No. 140,846
Int. Cl.³ B65D *85/18*
U.S. Cl. 206—286 **5 Claims**

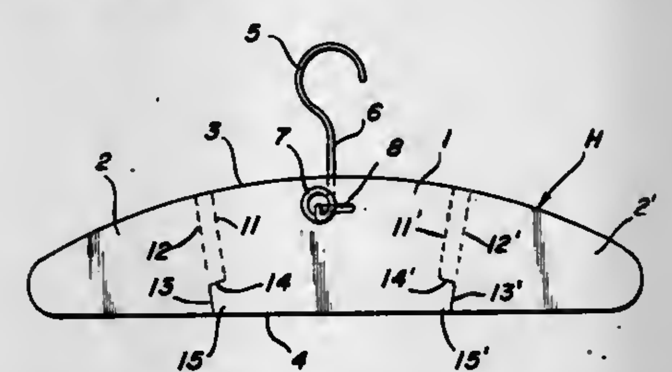

1. A foldable garment hanger for combination with a flexible garment bag to constitute a merchandising package for the latter and adapted for ready demonstration of the mode of functioning of the garment bag, said hanger being formed of a readily disposable body of cardboard with wire hook suspension means detachably connected to said body, said body comprising a central section and lateral wings extending from the opposite sides thereof with spaced score lines between said section and wings to permit the transverse folding of the lateral extremities of the garment bag in superposition with the central portion of the bag, while permitting the spreading of the wings when the garment bag is fully extended in position for support by the wire hook projecting through an opening at the upper end thereof.

4,300,689
DUAL WAVELENGTH SPECTROPHOTOMETER FOR AMPOULE LEAK DETECTION AND CONTENT INSPECTION
Michael L. Franklin, Parsippany, and Charles W. Jeunelot, Wayne, both of N.J., assignors to Hoffmann-La Roche Inc., Nutley, N.J.
Continuation of Ser. No. 91,602, Nov. 5, 1979, abandoned, which is a continuation of Ser. No. 869,554, Jan. 16, 1978, abandoned. This application Aug. 22, 1980, Ser. No. 180,249
Int. Cl.³ B07C *5/342*
U.S. Cl. 209—524 **5 Claims**

1. A dual wavelength spectrophotometer for use in connection with container content inspection and in particular container leak detection, comprising in combination:
(a) a source of radiant energy;
(b) first means arranged to receive radiant energy from said soure which has passed through the container and its contents for generating simultaneonsly identical signals constituting optical signatures of the container and its contents;
(c) a plurality of predeterminably selected unique radiant energy filter means arranged to each receive a said optical signal from said first means;

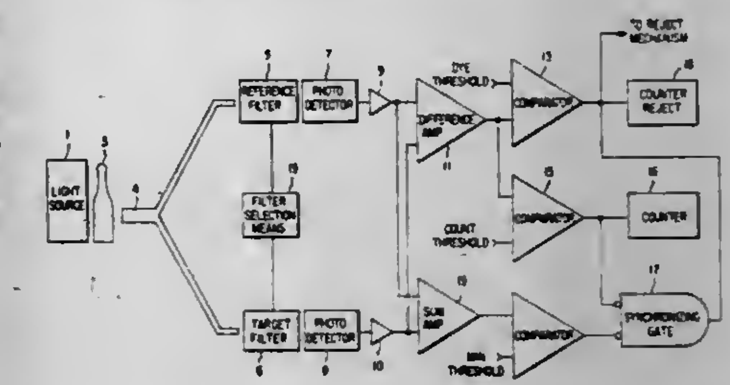

(d) a plurality of photodetector means arranged with said filter means for providing a plurality of respective output electrical signals representative of the radiant energy received from said filter means;
(e) second means for determining the difference between at least a selected first pair of said respective output electrical signals and comparing said difference with a pre-established first threshold value; and
(f) third means for determining the sum of at least a selected first pair of said respective output electrical signals and comparing said sum with a pre-established second threshold value.

4,300,690
SECURITY DISPLAY RACK
Robert E. Thomas, Santa Ana, Calif., assignor to Securax, Inc., Ft. Worth, Tex.
Division of Ser. No. 907,770, May 19, 1978. This application Feb. 13, 1980, Ser. No. 121,102
Int. Cl.³ C05B *73/00*
U.S. Cl. 211—4 **10 Claims**

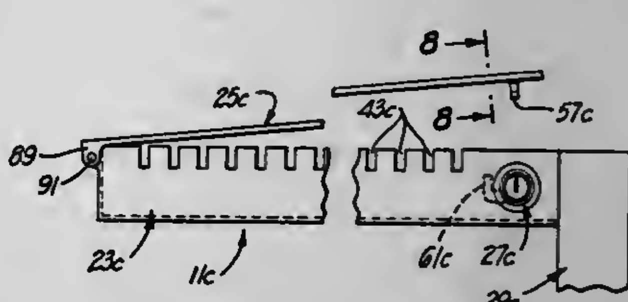

1. A security display rack for articles, said rack comprising:
an elongated support member having an elongated surface facing in a first direction and a plurality of grooves extending through the support member and opening at said elongated surface, each of said grooves being adapted to have at least a portion of one of the articles inserted therein with the grooves spacing the articles along the support member;
an elongated locking member adapted to at least partially cover the open ends of said grooves to impede removal of the articles from the grooves;
means for mounting the locking member for pivotal movement about a pivot axis between open and closed positions;
said locking member lying along the elongated surface of the

support member in said closed position to at least partially close the open ends of all of the grooves sufficiently to impede removal of the articles from the grooves;
said pivot axis extending generally transverse to the elongated support member and the locking member being movable about the pivot axis away from the grooves generally in said first direction toward said open position;
locking means for locking the locking member in said closed position;
means coupled to the support member for elevating the support member above a support surface; and
said elongated support member having a recess therein and said locking means including a first locking element carried by said elongated locking member and adapted to be received in said recess in said closed position and a second locking element in said recess and carried by said elongated support member, said pivot axis being adjacent one end of the elongated locking member and said first locking element is adjacent the other end of said elongated support member.

4,300,691
DISPLAY STAND AND METHOD OF FORMING SAME
Israel Shemtov, 1594 Carroll St., Brooklyn, N.Y. 11213
Filed Jan. 1, 1979, Ser. No. 44,561
Int. Cl.³ A47F *5/02*
U.S. Cl. 211—131 **6 Claims**

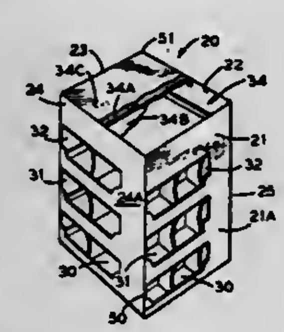

1. A display stand comprising
a plurality of rectangular disposed side walls integrally connected to one another to define a tubular body portion,
each of said side walls including a discrete reinforcing wall forming member,
each of said wall forming members having a plurality of cut out portions to define an access opening,
an outer and inner covering of sheet plastic material disposed to either side of each of said respective wall forming members,
a fused seam interconnecting said inner and onter plastic sheets extending transversely of said sheets between adjacent wall forming members,
another fused seam interconnecting said inner and outer sheets defining each of said access openings,
and a fused seam interconnecting said inner and outer plastic sheets adjacent to the upper and lower edges of said wall forming members,
said side wall each having an inturned bottom flap,
a bottom wall supported on and connected to said inturned bottom flaps,
a plurality of partitions vertically spaced above said bottom wall,
a pocket flap foldable inwardly of the tubular body about a foldline defining the upper edge of the respective access opening,
said pocket flaps defining a support for intermediate partitions,
a separator partition connected to each of said intermediate partitions,
said separator partitions having folded end portions, and
a second separator partition disposed at right angles to said first separator partition,
said first and second separator partitions defining a plurality of compartments between adjacent intermediate partitions,
said access opening in said side walls being open to said compartments defined between adjacent partitions,
a rotary base connected to said bottom wall to permit said body portion to rotate relative to said base,
and a top wall defining a closure for said body portion.

4,300,692
LATCHING HOOK STRUCTURE FOR SUPPORTING VENDIBLE ARTICLES, PARTICULARLY TRINKETS AND THE LIKE
Vitalis Moreno, Milan, Italy, assignor to Modiani & Associati, Milan, Italy
Filed Feb. 14, 1979, Ser. No. 12,201
Claims priority, application Italy, Jul. 14, 1978, 25680 A/78
Int. Cl.³ A47F *7/02*
U.S. Cl. 211—87 **10 Claims**

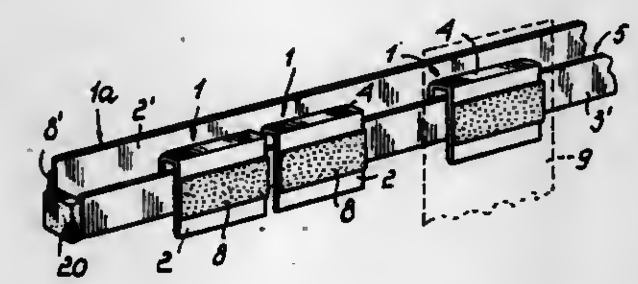

1. An interlocking hook structure for supporting vendible articles comprising
at least one hook-like member formed from a resilient material including, in cross-section,
a vertical back portion,
a vertical front portion extending parallel to said back portion,
a joining web portion uniting said front and back portions, and
a book portion extending at a slant from a point on said front portion remote from said web portion toward said back portion and said web portion to a point intermediate between said back and front portions; and
interlocking hanger means associated with said at least one hook-like member in snap engagement therewith for supporting said honk-like member and cooperating with the hook portion thereof to prevent undesired disengagement of said book-like member therefrom.

4,300,693
AUTOMATIC FEED DEVICE FOR MERCHANDISE DISPLAY
William S. Spamer, Roswell, Ga., assignor to The Mead Corporation, Dayton, Ohio
Filed Nov. 15, 1979, Ser. No. 94,635
Int. Cl.³ A47F *1/00*
U.S. Cl. 211—49 D **8 Claims**

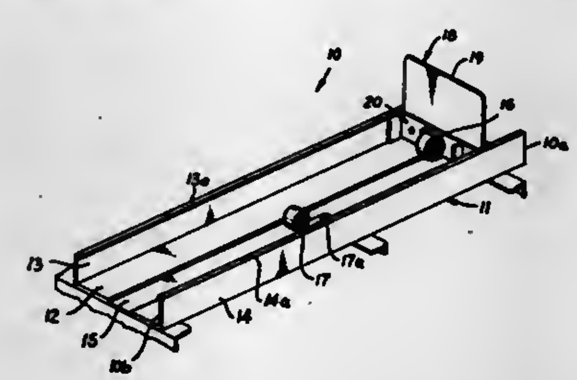

1. An automatic article feed device having a spring loaded feed assembly powered for the duration of its travel by a primary spring to move articles along a track and comprising a secondary spring to augment the spring force exerted on the feed assembly during an initial part of its travel whereafter the feed assembly is powered solely by the primary spring, said primary and secondary springs forming coiled strips when unrestrained and each spring being mounted to propel the feed assembly whilst that spring is seeking to establish its unrestrained condition, characterized in that said primary and secondary springs are mounted on the track at longitudinally spaced locations to push the feed assembly along the track.

4,300,694
HINGED PALLET BOX
Hershey L. Wait, Lake Zurich, and Edward S. Kordowski, Chicago, both of Ill., assignors to General Box Company, Toledo, Ohio
Filed Jan. 21, 1980, Ser. No. 114,117
Int. Cl.³ B65D *6/20*
U.S. Cl. 217—43 R **6 Claims**

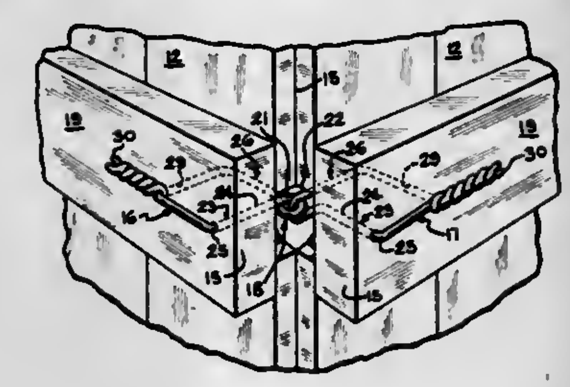

1. An improved hinged collapsible pallet box comprising, in combination, a plurality of sidewall assemblies said sidewall assemblies each including a side panel and reinforcing cleats, said side panel having an outer surface, said cleats terminating adjacent said edges of said side panel, a first and second opening defined in said side panel and reinforcing cleat, said first and second openings being positioned substantially perpendicular to said surface of said side panel, said first and second openings being substantially parallel and spaced apart, first and second hinge assemblies joined together by mating loops, said first and said second hinge assemblies each including a first leg extending from said mating loops and positioned in said first opening and extending generally perpendicularly with respect to said surface of said side panel, and a second leg having a first portion extending from said mating loop parallel to and adjacent said side panel and reinforcing cleat, said second leg having a second portion extending through said second opening in said side panel and reinforcing cleat, the distal ends of said first and second legs extending through said first and second openings being joined together to secure said first and second hinge assemblies to said sidewall assemblies.

4,300,695
FOLDING CONTAINER
Te-Chi Hsu, 3 Fl., 496-2, Fuchin St., Taipei, Taiwan
Filed Nov. 30, 1979, Ser. No. 99,213
Int. Cl.³ B65D *7/24*
U.S. Cl. 220—6 **8 Claims**

1. A folding container molded from plastic materials comprising:
four side walls having an inner face, an outer face and bottom borders, a bottom having a border and a lower face, and a lid; and
individual hing elements alternatively provided on said border of said bottom and on said bottom borders of said side walls to interlock, those of said hinge elements on said border of said bottom having no base portion so that a

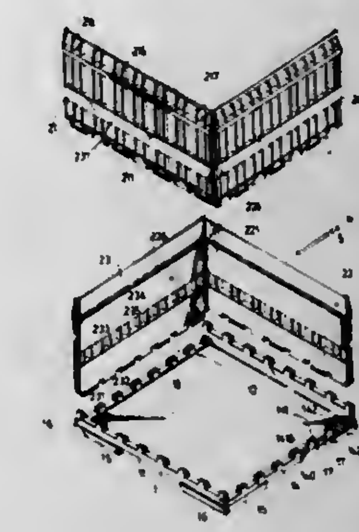

mold thereof can be removed from said lower face of said bottom.

4,300,696
LITTER BIN
Ian R. Bryce, Flat 2, 15 Rockley Rd., South Yarra, 3141, Melbourne, Australia
Filed May 19, 1980, Ser. No. 151,454
Claims priority, application Australia, May 18, 1979, PD8861
Int. Cl.³ B65D *49/02*
U.S. Cl. 220—18 **20 Claims**

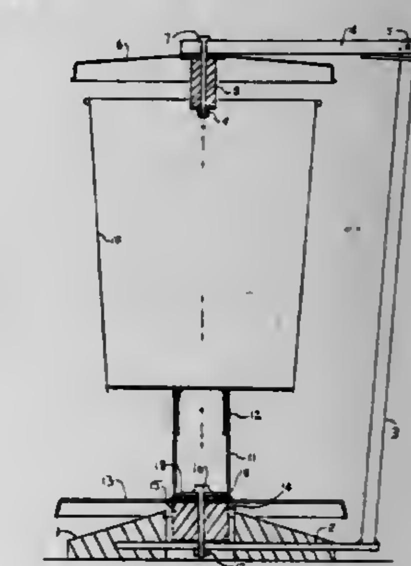

1. A litter bin comprising a base member, a litter container mounted on said base member through a universal connection means, an upwardly extending support means secured to said base member, a lid directly or indirectly carried by said support means and normally substantially covering said litter container, and activating means associated with said container whereby the container may be tilted in substantially any direction through said connection means from its position under said lid to a position in wich it is exposed for the receipt of litter or refuse.

4,300,697
WIRE CONTAINER FOR RETURNABLE BEVERAGE CANS
Robert E. Dickens, 910 Bridgestone Dr., Rochester, Mich. 48063
Filed Oct. 1, 1979, Ser. No. 80,237
Int. Cl.³ B65D *6/08, 6/40*
U.S. Cl. 220—19 **5 Claims**

1. A wire container for returnable beverage cans having an open top and a wire bottom member comprising:
a plurality of parallel, horizontal, rectangular wire frame

members having a pair of opposed spaced apart sides and a pair of opposed spaced apart ends, joined in a spaced apart manner by a plurality of upright rods abutting the frame members around the perimeter thereof;

the bottom member hinged to a lowermost frame member;

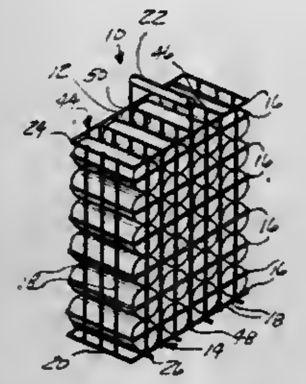

an opposed central pair of upright rods extending upward past an uppermost frame member then inward to form a handle support, said opposed pair of upright rods defining a marginal edge of a divider member.

4,300,698
MOUNTING MEMBER
James H. Williamson, Jr., 170 Linden St., Winnetka, Ill. 60093
Filed Oct. 22, 1979, Ser. No. 87,219
Int. Cl.³ B65D *25/10, 25/20*
U.S. Cl. 220—85 R 7 Claims

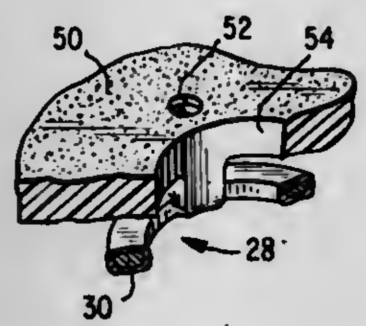

1. An integral assembly of a tank and a mounting member adapted for subsequently accommodating the attachment of a device to the mounting member on the tank wall, said assembly comprising:

a molding resin molded as a wall defining an interior volume to form the tank; and

a mounting member carried by said tank wall, said member comprising a metal alignment ring having a generally annular configuration and comprising a plurality of posts unitary with said alignment ring, each said post projecting outwardly from said alignment ring and into said wall, each said post defining a threaded bore for receiving a threaded fastener, said tank wall being molded with portions of said posts embedded in said tank wall with the distal ends of said posts communicating with the tank exterior for permitting access to said threaded bores for receiving threaded fasteners for mounting said device to said tank wall, said alignment ring being spaced away from said tank wall on the interior of said tank and defining spaces between said alignment ring and said tank wall between adjacent posts, all of the surfaces of said mounting member that project from said tank wall on the interior of said tank being encapsulated within said molding resin.

4,300,699
FUEL TANK FOR MOTOR VEHICLES
Sigmund Anhegger, Renningen, Fed. Rep. of Germany, assignor to Dr. Ing. h.c.F. Porsche AG, Stuttgart, Fed. Rep. of Germany
Filed May 8, 1980, Ser. No. 148,048
Claims priority, application Fed. Rep. of Germany, Jun. 6, 1979, 2922876
Int. Cl.³ B65B *3/04;* B65D *25/02*
U.S. Cl. 220—86 R 8 Claims

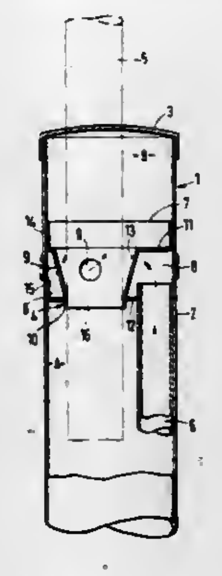

1. In a fuel tank for motor vehicles of the type having a filler neck, a fuel tank vent line and a receptacle for insertion of a pump nozzle connected therein, the improvement wherein the receptacle is constructed to at least partially surround a pump nozzle inserted into said filler neck in close proximity thereto, said receptacle comprises an insert which delimits a hollow space between sides of said insert and a wall portion of said filler neck, said hollow space being closed except for openings communicating outwardly from said hollow space in a direction away from said fuel tank and said fuel tank vent line which terminates in said hollow space, whereby air vented by said vent line is directed into said filler neck upstream of an outlet of said pump nozzle inserted into the filler neck.

4,300,700
CLOSABLE FOOD CONTAINER BODY AND UTENSIL ENCLOSING COVER ASSEMBLY
Henry M. Chang, Bronx, N.Y., assignor to Container Dynamics, Inc., Miami Beach, Fla.
Filed Jun. 26, 1980, Ser. No. 163,279
Int. Cl.³ B65D *51/20, 39/00*
U.S. Cl. 220—257 20 Claims

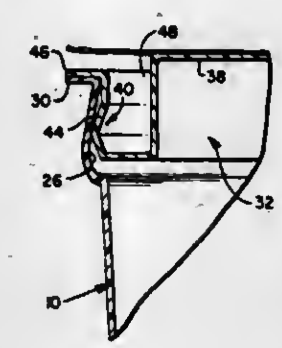

16. A generally square cover assembly for a container body having a peripheral undercut seating formation, said assembly comprising:

a cover member having a central panel and a peripheral edge formation to seal within the seating formation of a container body, said edge formation having an edge wall portion depending from an outwardly projecting cover flange and having, in vertical section, an exterior convex surface;

a re-entrant utensil recess formed in said central panel and extending diagonally of said cover assembly, said utensil recess having a floor and marginal sidewalls spaced from said edge wall portion thereby to present a portion of said central panel completely about said recess between said marginal sidewalls and said edge wall portion; and

a removable cover sheet releasably secured to said central panel and extending loosely beyond the edges of said central panel to provide a marginal grasping edge for removal of said cover sheet.

4,300,701
CLOSURE CAP
Paul Santostasi, Sarasota, Fla., assignor to Sun Coast Plastic Closures, Inc., Sarasota, Fla.
Filed Apr. 17, 1980, Ser. No. 141,173
Int. Cl.³ B65D *41/04*
U.S. Cl. 220—289 2 Claims

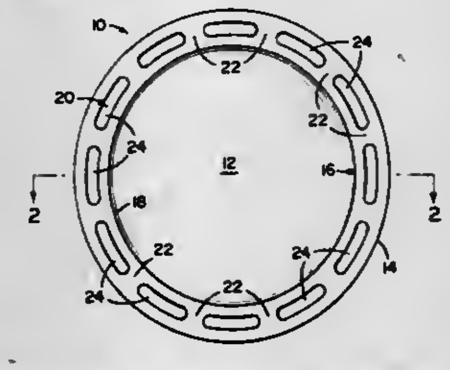

1. A closure cap for capping a container including a threaded neck, said closure cap comprising a top having substantially annular skirt depending downwardly therefrom, a resilient interference structure comprising a concentrical inner wall in parallel spaced relationship relative to said substantially annular skirt forming a chamber therebetween and a plurality of ribs formed between said substantially annular skirt and said concentric inner wall to form a plurality of interrupted chambers therebetween, such that said concentric inner wall engages the threads formed on the container to deform said concentric inner wall adjacent said interrupted chambers to form a locking seal therebetween whereby said closure cap is a press fit to the container.

4,300,702
SEALING CAP
Konrad Scharrer, 12, Ulrich-V-Hassel-Strasse, 4019 Monheim, Fed. Rep. of Germany
Filed Apr. 28, 1980, Ser. No. 144,007
Claims priority, application Fed. Rep. of Germany, Apr. 27, 1979, 2917150
Int. Cl.³ B65D *41/06, 41/36*
U.S. Cl. 220—295 4 Claims

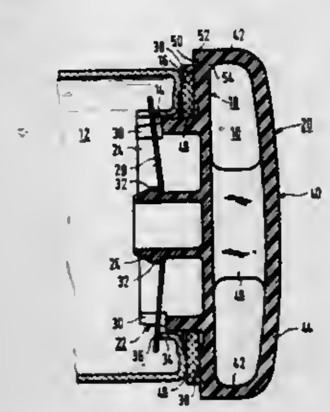

1. In a sealing cap, for a container or a pipe having means defining an opening surrounded by a circular sealing face and tightening means to cooperate with the cap, the cap including:

(a) an external cover section adapted to cover said opening and the circular sealing face and having an external diameter which is greater than the external diameter of the circular sealing face, and includng a circular sealing face facing the sealing face of the container or pipe;

(b) an internal cover section projecting from the external cover section into the opening, the internal cover section including tightening means to cooperate with the tightening means of the container or pipe;

(c) a handle molded in one piece on the external cover section and extending diametrically across the external cover section at the outer face thereof, said handle including a U-shaped stirrup having two legs by the ends of which it is connected to the external cover section, said handle further including a wall extending along a center line of the stirrup and connecting the stirrup to the external cover section; the improvement that:

(i) the external cover section and the internal cover section are made in one piece of plastic material

(ii) the legs of the solid material stirrup have an internal spacing from each other which is not less than the external diameter of the circular sealing face of the cover section

(iii) the length of the wall connecting the stirrup to the external cover section, measured in the longitudinal direction of the stirrup, is less than the internal diameter of the circular sealing face of the cover.

4,300,703
DISTRIBUTOR FOR PSEUDO-SPHERICAL OBJECTS
Noël Launay, Beauvais, France, assignor to Societe d'Assistance Technique pour Produits Nestle S.A., Lausanne, Switzerland
Filed Jan. 14, 1980, Ser. No. 111,486
Claims priority, application France, Jan. 16, 1979, 79 00939
Int. Cl.³ B65H *3/42*
U.S. Cl. 221—187 9 Claims

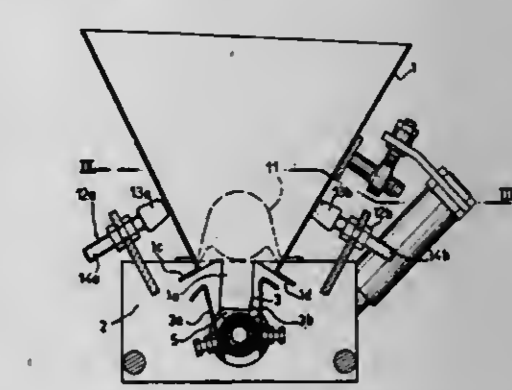

1. An apparatus for distributing quasi-spherical objects comprising:

(a) a hopper for receiving said objects, said hopper having a discharge opening at its lower end;

(b) means for imparting an oscillating movement to said hopper;

(c) a cylindrical tube disposed beneath said hopper, said tube having an open end and an intake opening confronting said discharge opening;

(d) means for rotating said tube back and forth about its axis so that said intake opening sweeps across said discharge opening;

(e) a rod slidably disposed within said tube; and

(f) means for reciprocating said rod between a retracted position in which said rod is disposed entirely on one side of said intake opening and an extended position in which said rod extends across and occludes said intake opening, said rod advancing towards said open end of said tube during movement from said retracted position towards said extended position.

4,300,704
BLOCKING DEVICE FOR USE WITH CUP RECEPTACLES
Gustaf Funke, and Bernt Hendberg, both of Karlskoga, Sweden, assignors to JiHaPlast Johnson Juls AB, Karlskoga, Sweden
Filed Feb. 8, 1980, Ser. No. 119,727
Claims priority, application Sweden, Feb. 19, 1979, 7901466
Int. Cl.³ A47F *1/08;* B65G *59/10*
U.S. Cl. 221—301 **4 Claims**

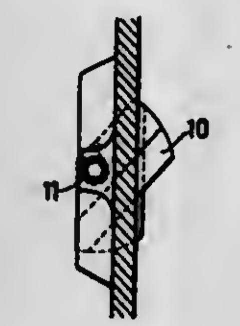

1. Blocking means for use with a receptacle for cups pilable in each other and having an external collar, bead or the like, said blocking means being positioned at the discharge opening of the receptacle and including a blocking body having two spaced apart blocking surfaces, one of said surfaces being arranged for holding in a normal position all cups in the receptacle and forming a slide surface for the collar of the outermost cup in said receptacle when said outermost cup is being discharged from said receptacle through said discharge opening, said slide surface being, during the discharge of each of the cups, displaced outwardly laterally of the discharge direction, and the second blocking surface upon the displacement of the slide surface being arranged to be displaced inwardly inside of the collar of the next adjacent cup before this next cup reaches said second blocking surface, said blocking body being provided with spring means, against the action of which the blocking surfaces are displaced and which returns the blocking body to said normal position after a cup being discharged has left the slide surface, said blocking body being mounted for rotation about an axis extending substantially parallel to the discharge direction, and said slide surface from the abutment thereof against the collar in the normal position extending at an acute angle to the discharge direction and successively changing in direction to an orientation which is more and more parallel to the discharge direction.

4,300,705
VACUUM INSULATED BOTTLE WITH MECHANISM FOR DISPENSING LIQUID BY COMPRESSION
Min C. Shy, 20, Alley 18, Lane 109, Hoping St., Yang Ho City, Taipei Hsien, Taiwan
Filed May 9, 1980, Ser. No. 148,102
Int. Cl.³ B67D *5/42*
U.S. Cl. 222—131 **4 Claims**

1. A vacuum insulated bottle including a liquid dispensing device comprising in combination:

a. an outer bottle body;

b. an inner bottle body disposed within said outer bottle body with said inner and outer bottle bodies each having an outlet at the respective upper end thereof;

c. a stopper member disposed in the outlet of said inner bottle body in sealing relationship thereat, said stopper member having formed therein a generally vertically extending central duct means with a laterally extending branch passage extending upwardly at a slight inclination to the horizontal to the periphery of said stopper member, said central duct means and said laterally extending passage each having a valve seat adjacent the respective lower ends thereof and a valve element cooperating with each of said valve seats;

d. an elastic pouch disposed above said stopper member with an opening tightly coupled with the upper end of said central duct;

e. a lid disposed adjacent the top side of said outer bottle body adapted to be selectively lifted from and lowered to closed position, said lid including a downwardly extending cylindrical case with at least one generally vertically extending bar on the inner wall thereof, said bar having an upper edge or abutment, said lid also having at least one shaft element projecting downwardly for a short distance from the under side thereof, said lid further having an opening at its top;

f. an activator member including a generally horizontally extending base in pressing contact with the upper end of said elastic pouch and a press portion extending through said opening at the top of said lid, said base having at least one slotted hole therein and a lateral flange with an outwardly opening groove;

g. a suction pipe disposed within said inner bottle and having an upper end connected to the lower end of the central duct of said stopper member; and

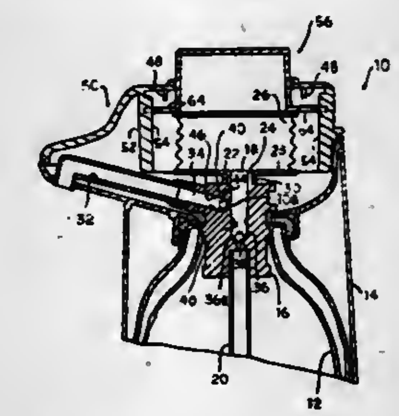

h. an outlet tube having a lower end connected with the fork or branch passage in said stopper member;

wherein said outwardly opening groove of said lateral flange is registrable with said bar so as to be guided in vertical movement when said bar is disposed therein to thereby pump liquid from said inner bottle body, up said suction pipe, through said stopper member, into said elastic pouch, out said outlet tube by compressing said elastic pouch and allowing it to expand, said lateral flange may be raised above the upper edge of said bar at which height the downwardly projecting shaft element will penetrate the slotted hole in the lateral flange and the actuator member may be rotated to the extent that at least one portion of the lateral flange on one side of the outwardly opening groove will be above the upper edge or abutment of said bar and be locked against pumping action, with said downwardly projecting shaft element being operative to limit rotation of said activator to and from registration of said groove and said bar.

4,300,706
LUGGAGE CARRIER FOR A THREE-WHEEL MOTORCYCLE
Pete Hendrick, 18301 SW. 293rd St., Homestead, Fla. 33030, and James J. Arias, 11561 SW. 186 St., Miami, Fla. 33157
Filed Jun. 25, 1980, Ser. No. 162,726
Int. Cl.³ B60R *9/00;* B02D *61/08*
U.S. Cl. 224—31 **9 Claims**

1. A carrier assembly for a motorcycle of a type having a front wheel, a pair of opposed side rear wheels, a seat including front and back female latch brackets removably attached thereto and a male attachment latch means fixed to a frame portion of the motorcycle in a position for selective manual operation thereof to engage or disengage the female latch brackets, said carrier assembly comprising a main carrier portion disposed rearwardly of the seat and above the rear wheels, a forward extension from said carrier portion, projecting generally over an area normally occupied by the seat, when the seat is unlatched and removed; generally downwardly projecting means, from said forward extension, for fixed attachment thereto of the front and back female latch brackets, when said brackets are removed from the seat, in identical spaced apart

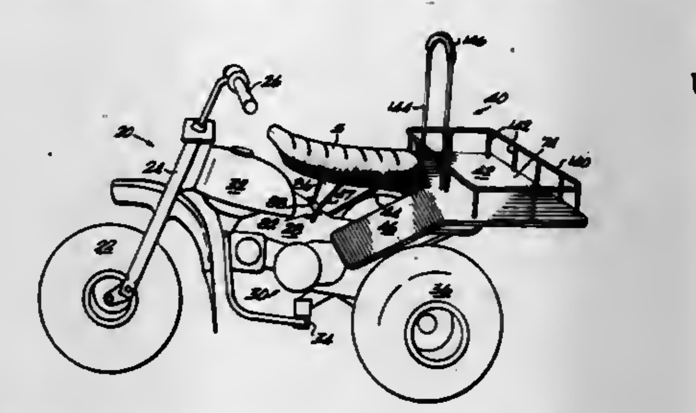

positions and locations relative to their normal positions and locations when fixed to the bottom of the seat, to permit selective manual operation of the male attachment latch means to engage or disengage the female latch brackets when fixed to said downwardly projecting means.

4,300,707
COMBINED RUCKSACK FRAME AND CHAIR
Per Kjaer, Nedre Skogvei 4B, Oslo 2, Norway
Filed Aug. 24, 1979, Ser. No. 69,304
Claims priority, application Norway, Aug. 25, 1978, 782887
Int. Cl.³ A45F *4/02*
U.S. Cl. 224—155 **7 Claims**

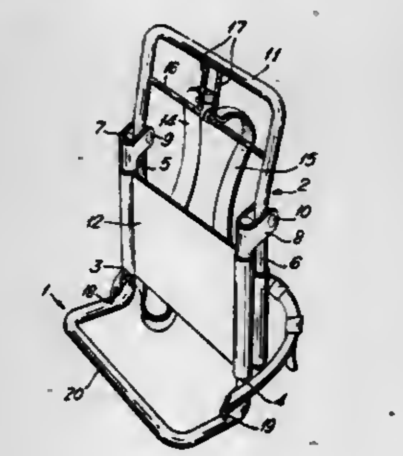

1. A device usable in a first functional position as a rucksack frame and usable in a second functional position as a chair with a backrest, the device comprising:

first and second tubular frame members, each frame member having an end support portion and parallel side parts secured to the end support portion and having respective end portions spaced from the associated end support portion;

hinge means having hinge connections for articulating said end portions of the side parts of the first frame member to respective side parts of the second frame member at locations intermediate the ends of said side parts of said second frame member, whereby the side parts of said first and said second frame members are capable of being disposed parallel to and at right angles to each other, respectively;

said end support portion of said first frame member projecting at an angle from its associated side parts by a distance essentially corresponding to the distance between said hinge connections and an outer edge of said end support portion of the second frame member; and

the frame members being provided with supporting bands stretched between the side parts of each frame member in the regions between the hinge connections and the end portions of the side parts.

4,300,708
DRYWALL TAPER'S TOOL CARRIER AND COMBINATIONS THEREWITH
Norbert C. Pattermann, 320 E. Alpine St., Altamonte Springs, Fla. 32701
Filed Mar. 17, 1980, Ser. No. 130,862
Int. Cl.³ A45C *1/04*
U.S. Cl. 224—253 **1 Claim**

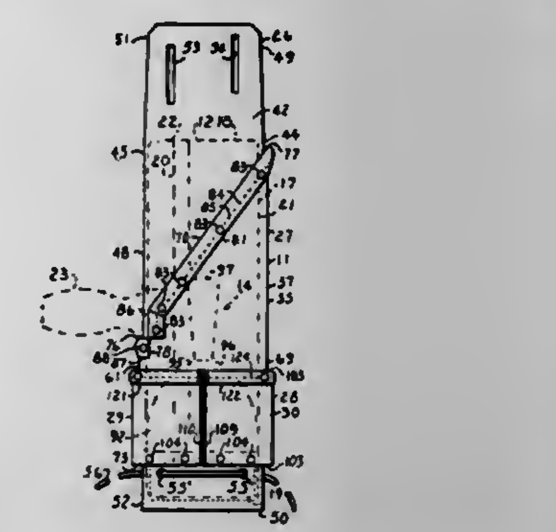

1. A body carrier for a drywall taper's broad knife which has an elongated flat blade with opposite ends, and opposite side edges that extend between said opposite ends, and an elongated handle that is fixed to the blade between said opposite ends and extends laterally thereof at one of said opposite side edges, said carrier having a narrow pocket for housing said blade which has a leading side and a trailing side and includes a back side wall that normally confronts a side of the carrier user's body, a front side wall that is normally laterally offset from the user's body side and facially confronts said back side wall therebetween, and a pair of elongated narrow side walls that are spaced apart and respectively interconnect the back and front side walls at the leading and trailing sides of said pocket, and means for suspending the pocket from the user's body, said carrier comprising an elongated and vertically oriented, flat, pliant component which forms said back side wall and has a leading side edge, a trailing side edge, a back face that extends between the leading and trailing side edges of said pliant component and normally faces the carrier user's body side, and a front face that extends between the leading and trailing side edges of said pliant component and faces the interior of the pocket, and a vertically oriented, flat, pliant member which has a pair of elongated, narrow and laterally spaced apart marginal portions that respectively form said narrow side walls and are arcuately rolled and arranged to respectively straddle the leading and trailing side edges of said flat pliant component, and an intermediate portion which extends between said marginal portions and forms said front wall, and means securing the marginal portions in facial contact with the back face of said pliant component and along the respective leading and trailing side edges straddled thereby, said pliant member having an upper edge portion which defines a top opening in the pocket for receiving the blade of the broad knife, and a lower edge portion which defines a bottom opening in the pocket, each of the top and bottom openings in said pocket extending between said spaced apart marginal portions and the leading and trailing side edges straddled thereby, and said upper edge portion having an intermediate edge portion that inclines from the marginal portion at the trailing side of said pocket, and a side edge portion which is located below said intermediate edge portion and at the upper end of the marginal portion at the trailing side of said pocket to provide an edge recess that accomodates the handle that is fixed to a broad knife blade housed in said pocket, said body carrier also having an auxiliary pocket for a shear knife, said auxiliary pocket having a rear side wall, and a front side wall, said rear side wall of the auxiliary pocket being formed by said vertically oriented flat,

pliant member, said carrier comprising a pliable component which forms the front side wall of the auxiliary pocket and has a pair of elongated, narrow and laterally spaced apart border portions that overlay and are fixed to the respective marginal portions of said pliant member at the back face of the back side wall forming pliant component, and an intermediate portion which extends between said border portions, said pliable component having an upper end portion which defines an upper opening in the auxiliary pocket, and a lower end portion, and said intermediate portion of said pliable component baving a medial portion which projects outwardly of the front side wall of the auxiliary pocket and forms a vertically extending wall strengthening rib that extends between the upper and lower end portions of said pliable component, and spaced apart means securing said pliable component along its lower end portion to said pliant member and providing bottom openings between the securing means for the withdrawal of debris from said auxiliary pocket.

4,300,709
AUTOMOBILE CONSOLE
Cornelius D. Page, Jr., Gastonia, N.C., assignor to Allied Plastics, Inc., Gastonia, N.C.
Filed May 16, 1980, Ser. No. 150,321
Int. Cl.³ B60R *7/00*
U.S. Cl. 224—275 **12 Claims**

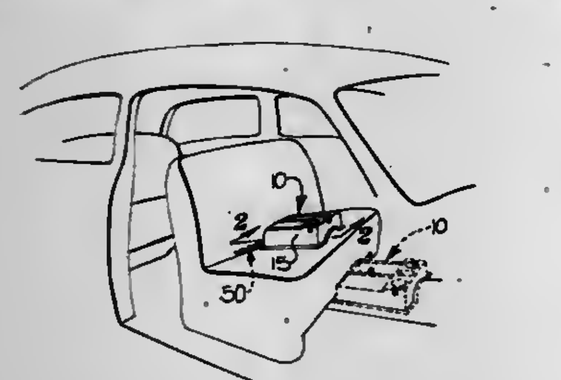

1. A molded plastic console adapted for use in an automobile to retain various articles at a convenient location adjacent the driver or passenger, and characterized by the ability to also function as an armrest or writing support while being retained upon the automobile seat, and comprising
an integral molded plastic body comprising
(a) a support skirt having a rectangular outline in plan view and composed of a pair of opposing parallel end walls and a pair of opposing parallel side walls, with said end and side walls defining a top side and a bottom side of the console, and
(b) interior wall means dividing at least a substantial portion of the area within said end and side walls into two side-by-side receptacles of like rectangular outline,
a planar lid having a rectangular outline generally conforming to that of each of said receptacles,
hinge means mounting said lid for pivotal movement about an axis disposed immediately above and aligned between said receptacles, whereby said lid may be selectively pivoted to cover either of said receptacles and is adapted to function as an armrest or a writing support in either position,
an elongate flat extension, and
means mounting said extension to said body adjacent one of said end walls, and such that the extension projects a substantial distance beyond said one end wall and is adapted to be retained between the cushions of the seat.

4,300,710
CONTINUOUS FORM FEEDER
R. Clark Du Bois, Fairfield, and John Hamma, Milford, both of Conn., assignors to Gradco-Dendoki, Inc., Newport Beach, Calif.
Filed Nov. 29, 1979, Ser. No. 98,539
Int. Cl.³ G03B *1/30;* **G03G** *15/00*
U.S. Cl. 226—74 **12 Claims**

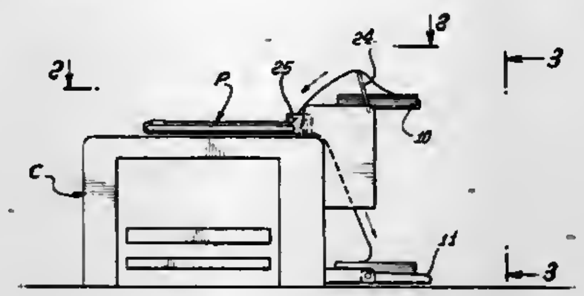

1. Fan-folded form copying apparatus comprising a copier for making successive copies of original sheets, a platen pivotally mounted on said copier; a fan-folded form receiving tray disposed horizontally above and rearwardly of said platen; a form refolding tray disposed horizontally below said platen and rearwardly of said copier; means for guiding the form from said receiving tray across said platen and beneath said platen to the rear of said copier; intermittently operable drive means for progressively feeding said form beneath said platen to the rear of said copier for gravitation to said refolding tray and means for mounting said drive means on the rear of said copier intermediate said receiving tray and said refolding tray.

4,300,711
APPARATUS FOR THE PNEUMATIC TRANSPORT OF TEXTILE BAND MATERIAL
Hans P. Sutter, and Josef Hartmann, both of Uster, Switzerland, assignors to Luwa AG, Zurich, Switzerland
Filed Mar. 13, 1980, Ser. No. 130,059
Claims priority, application Switzerland, Mar. 23, 1979, 2720/79
Int. Cl.³ B65H *17/32*
U.S. Cl. 226—97 **13 Claims**

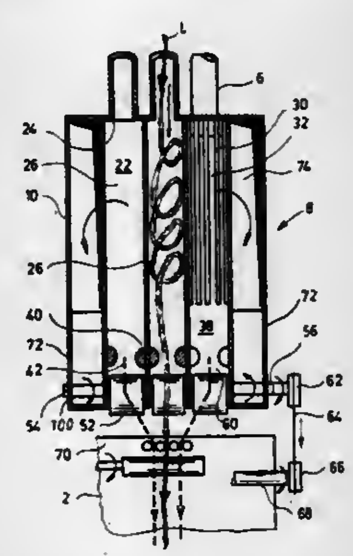

1. An apparatus for the pneumatic transport of textile band material, especially slivers, slubbings or rovings, comprising:
at least one transport tube through which there is transported the textile band in a predetermined direction of travel;
said transport tube having a delivery end;
means defining a compartment;
said delivery end of said transport tube flow communicating with said compartment;
ventilator means having a suction side operatively connected with said compartment;
said means defining said compartment being provided with a band outlet opening for the exit of the textile band therefrom;
means for supporting the textile band provided for said compartment;
said supporting means for the textile band defining at least one elongate band delay chamber which directly merges with said delivery end of the transport tube;
said band delay chamber extending in the direction of travel of the textile band;
said band delay chamber being formed by guide elements constituting at least part of said textile band-supporting means;
said guide elements being structured so as to delimit therebetween throughpass openings whose total cross-sectional area is greater than the inner cross-sectional area of the transport tube; and
revolving sealing means operatively associated with said band outlet opening.

4,300,712
PAPER FEEDER DEVICE FOR MINIATURIZED PRINTERS
Shuhei Takeuchi, Morioka, Japan, assignor to Alps Electric Co., Ltd., Tokyo, Japan
Filed May 12, 1980, Ser. No. 148,734
Claims priority, application Japan, May 11, 1979, 54-62890
Int. Cl.³ B65H *17/22*
U.S. Cl. 226—157 **4 Claims**

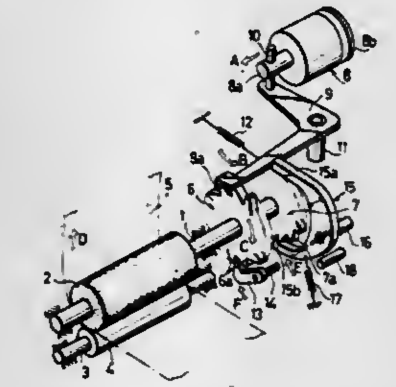

1. A paper feeder device for miniaturized printers, comprising an electromagnetic plunger adapted to be energized at the time of paper feeding, a paper feed roller fixedly mounted on a drive shaft, a first ratchet wheel mounted fixedly on and rotated together with said drive shaft, a second ratchet wheel fixedly mounted on a portion of said drive shaft adjacent to said first ratchet wheel so as to be rotated with said drive shaft, said second ratchet wheel having teeth inclined in a direction opposite to the direction in which the teeth of said first ratchet wheel are inclined, a first lever driven by said electromagnetic plunger to come into engagement with the teeth of said first ratchet wheel and thereby rotate said paper feed roller in a predetermined amount, and a second lever driven by said first lever to allow an engagement pawl of said second lever to be inserted between two adjacent teeth of said second ratchet wheel.

4,300,713
CASSETTE TAPE RECORDER
Masaaki Sato, Hachioji, Japan, assignor to Olympus Optical Co., Ltd., Tokyo, Japan
Filed Nov. 19, 1979, Ser. No. 95,325
Claims priority, application Japan, Nov. 21, 1978, 53-143927
Int. Cl.³ B65H *17/20*
U.S. Cl. 226—190 **5 Claims**

1. A cassette tape recorder comprising: a cassette chamber adapted to receive therein a tape cassette; a cover movably mounted on said recorder to open and close said cassette chamber; a capstan shaft having a pair of ends and adapted to extend through a tape cassette placed in said cassette chamber in operative engagement therewith; a pinch roller operable in cooperation with said capstan shaft to drive the tape of a tape cassette placed in said cassette chamber; first bearing means in said recorder operatively supporting said capstan shaft at one end thereof; and second bearing means mounted in said movable cover and adapted to be placed into and out of engagement with the other end of said capstan shaft as said cover is closed and opened, respectively, said second bearing means operating to support said capstan shaft at said other end thereof when said cover is closed.

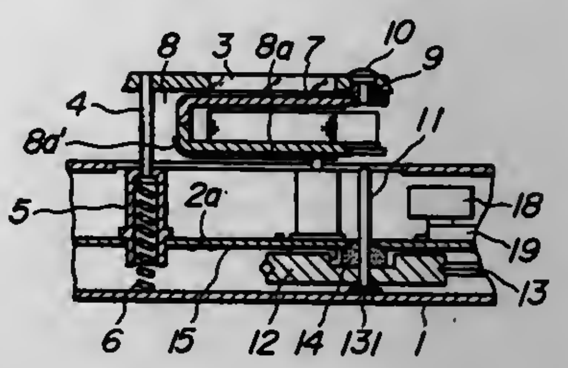

4,300,714
METHOD AND APPARATUS FOR SILENCING OF WEBS
Carl B. Dahl, Rockton, Ill.; Jere W. Crouse, and Roy A. Langdon, both of Beloit, Wis., assignors to Beloit Corporation, Beloit, Wis.
Filed Jan. 17, 1980, Ser. No. 113,235
Int. Cl.³ B65H *23/04;* **G03B** *1/48*
U.S. Cl. 226—196 **16 Claims**

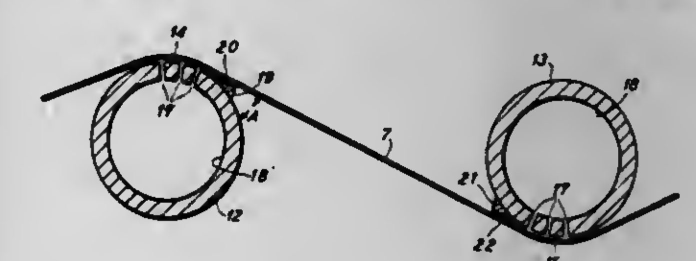

1. In a fixed guide bar of substantially circular perimeter providing an arcuate guide surface area over which a tensioned web is adapted to run at a speed such that in the off-running angle between the web and the curved perimeter of the bar, air moving in the direction of the web in such angle would tend to follow the curvature of the bar (Coanda effect) and cause splitting of the air between the web and the bar and thereby generate noise-causing vibration of the span of the web moving away from the bar, the improvement comprising:
spoiler surface means located along the effective length of said guide surface area, and said spoiler surface means lying in a plane extending substantially tangentially from the off-running side of said arcuate guide surface area for avoiding the Coanda effect and for stabilizing air moving with the web and thereby inhibiting noise-causing vibrations of said span of the running web moving away from the bar.

4,300,715
MECHANICAL PULSE REFLOW BONDING PROCESS
Alan S. Keizer, Huntingdon Valley, and Donald B. Brown, Willow Grove, both of Pa., assignors to The Jade Corporation, Huntingdon Valley, Pa.
Division of Ser. No. 930,488, Aug. 2, 1978, abandoned, which is a division of Ser. No. 829,837, Sep. 1, 1977, Pat. No. 4,166,562.
This application Jan. 18, 1980, Ser. No. 113,421
Int. Cl.³ B23K *1/12;* **H01L** *21/603*
U.S. Cl. 228—180 A **1 Claim**

1. A process for effecting a mechanical pulse reflow bond between one or more pairs of electrically conductive elements

of a microcomponent device using a reciprocable thermode for applying both heat and force at the bonding site,

said thermode comprising a clamp having a tip thereon for applying a mechanical bonding force directly to the conductive elements to be bonded at the bonding site, and a coaxial heated anvil outboard of said clamp and reciprocable relative thereto for selectively supplying heat for effecting the bond, said anvil being at a steady state temperature above that of the clamp,

effecting said bond by moving the clamp tip into engagement with the conductive elements at the bond site for directly clamping said elements to each other at the bond site, moving said heated anvil into mechanical contact

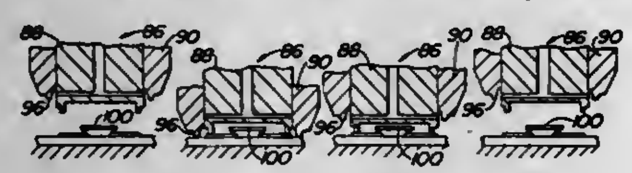

with an element to be bonded at a position remote from the bond site and thereby causing heat to flow from said anvil to said bond site, holding said anvil in contact with the conductive element for sufficient time so that heat flows along a conductive path through the element to the bond site, and then withdrawing the tip from contact with the bond site, maintaining said anvil in contact with said element for a sufficient time so that a predetermined temperature (T) versus time (t) heat pulse profile is generated to cause a reflow bond to be effected at the site, and maintaining the clamping force at the site by continued engagement of the clamp until the reflow bond has solidified, and then withdrawing the clamp tip, thereby effecting a mechanical pulse reflow bond at the bond site.

4,300,716
PAPERBOARD CARTON
Frederick R. Jennings, Cupertino, Calif., assignor to Pneumatic Scale Corporation, Quincy, Mass.
Filed Jan. 21, 1980, Ser. No. 113,487
Int. Cl.^{3} B65D *5/06;* **B31B** *49/02;* **B65D** *5/16*
U.S. Cl. 229—37 R **15 Claims**

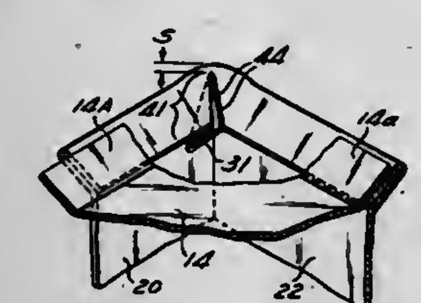

1. A one-piece carton blank fabricated of paperboard for forming a liquid-tight container comprising:
a plurality of sidewall panels contiguous and integral with one another in a side-by-side orientation;
a first end closure panel contiguous and integral with one end of one of said sidewall panels;
a second end closure panel contiguous and integral with the other end of said one of said sidewall panels; and
a pair of end sealing tabs respectively contiguous and integral with opposite ends of each of the other of said sidewall panels, each said sealing tab forming a rectangular strip extending over the combined width of said other sidewall panels; and
a plurality of diagonal score lines on each sealing tab which weaken but do not cut the paperboard in the vicinity of the juncture of each adjacent pair of said side panels.

4,300,717
ROTARY CENTRIFUGE SEAL
Allen Latham, Jr., Jamaica Plain, Mass., assignor to Haemonetics Corporation, Braintree, Mass.
Continuation of Ser. No. 26,292, Apr. 2, 1979, abandoned. This application Oct. 27, 1980, Ser. No. 201,336
Int. Cl.^{3} B04B *15/00*
U.S. Cl. 233—1 A **17 Claims**

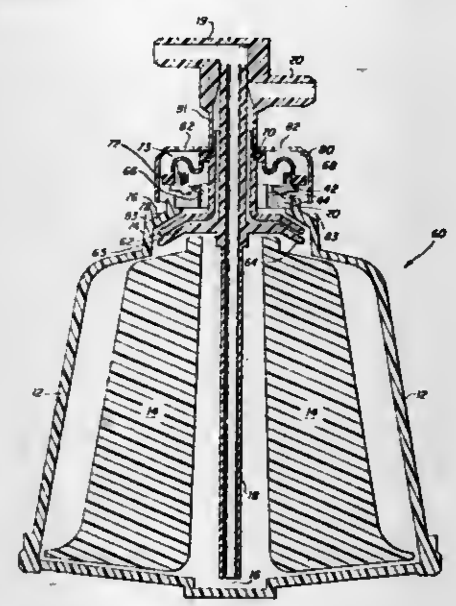

1. In a rotary centrifuge seal having a lower rotatable ring member and an upper non-rotatable ring member, each of said ring members having a sealing surface thereon to provide a dynamic seal between rotatable elements of a fluid-processing centrifuge and stationary elements of said centrifuge at an area of contact between the sealing surfaces of said ring members:
the improvement comprising providing means for entrapping solid particulate matter generated at the area of contact between said ring members and means for directing entrapped solid particulate matter back to the area of contact between said ring members for ingestion therebetween whereby solid particulate matter generated at the area of contact during operation of said centrifuge is prevented from contaminating fluids processed in the centrifuge.

4,300,718
ENGINE COOLING SYSTEM AIR VENTING ARRANGEMENT
Frederick A. Beyer, Southfield, Mich., assignor to Ford Motor Company, Dearborn, Mich.
Filed Apr. 10, 1980, Ser. No. 138,965
Int. Cl.^{3} F01P *7/02*
U.S. Cl. 236—34.5 **2 Claims**

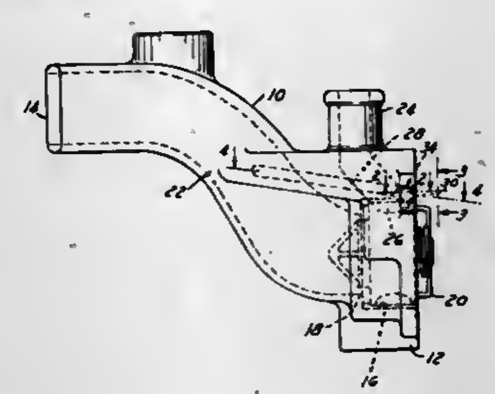

1. An air venting arrangement for the cooling system of an automotive type engine that includes a radiator coolant inlet connected by tubing hosing to the engine, the engine having a coolant outlet housing mounted to the engine in communication at one end with the engine internal coolant flow passages and the other end connected to the hosing for flow of hot coolant to the radiator, the outlet housing containing a thermo-

stat horizontally movable to open and close the outlet in response to coolant temperature changes from a predetermined level,
the housing having a horizontally oriented inlet portion sealingly receiving the thermostat therein and a horizontally oriented outlet portion connected to the hosing, and a housing connecting segment connecting the portions and extending in a diagonally upward direction from the inlet portion to the outlet portion, a bypass passage extending through the wall of the housing diagonally upwardly from an inlet point adjacent the uppermost outer diameter of the inlet portion containing the thermostat to a point within the connecting segment at a location vertically above the inlet point to the passage to assure a bleed of air through the passage from the coolant bypassing the thermostat, and check valve means in the bypass passage movable by gravity to a position opening the bypass passage in response to the presence of an air pocket in the bypass passage to vent air from the engine to the radiator and movable to a closed sealing position in repsonse to the force of coolant flow against the valve to prevent flow of coolant to the radiator through the bypass passage.

4,300,719
STEAM TRAPS
Les G. Balazs, Parma Heights, Ohio, assignor to The Clark-Reliance Corporation, Cleveland, Ohio
Filed Feb. 20, 1980, Ser. No. 122,829
Int. Cl.^{3} F16T *1/44*
U.S. Cl. 236—53 **16 Claims**

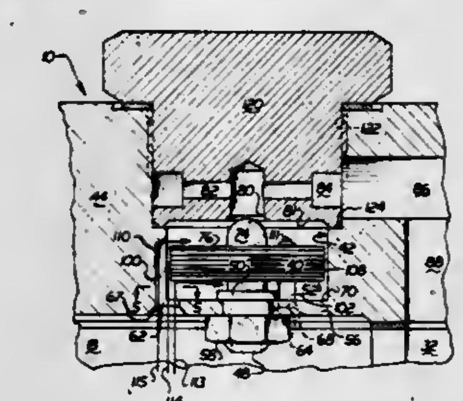

8. A stream trap comprising a valve member, a chamber, bellows means disposed in said chamber for controlling the position of said valve member in response to the temperature of fluid flowing through said steam trap, said bellows means including upper and lower end faces, surface means in said chamber for distributing fluid flowing through said chamber around said bellows means to promote rapid expansion and contraction of said bellows means with changes in temperature of the fluid flow through said chamber, said chamber having an outlet centrally located at one end thereof, said surface means including a plurality of fluid inlets at the end of said chamber opposite from said outlet, said fluid inlets being distributed about the periphery of said chamber, each of said fluid inlets conducting a flow of fluid into said chamber and each of said inlets being located so that a first portion of the fluid flowing through said inlet into said chamber is deflected by impact with said bellows means across the lower end face of said bellows means, said surface means further including a plurality of channel means, each of said channel means being associated with one of said inlets and forming a continuation thereof, each of said channel means at least partially defining a path along the edge of said bellows means for a second portion of the fluid flowing through one of said inlets, and each of said channel means having deflector means for deflecting the fluid flowing in said channel means across the upper end face of said bellows means, said deflector means including a bevelled end face of each of said channel means located below said one end of said chamber.

4,300,720
MOTOR VEHICLE
Werner Baier, Stockdorf, and Reiner Friedl, Starnberg, both of Fed. Rep. of Germany, assignors to Webasto-Werk W. Baier GmbH & Co., Munich, Fed. Rep. of Germany
Filed Aug. 9, 1979, Ser. No. 65,227
Claims priority, application Fed. Rep. of Germany, Aug. 16, 1978, 2835829
Int. Cl.^{3} B60H *1/02*
U.S. Cl. 237—12.3 A **8 Claims**

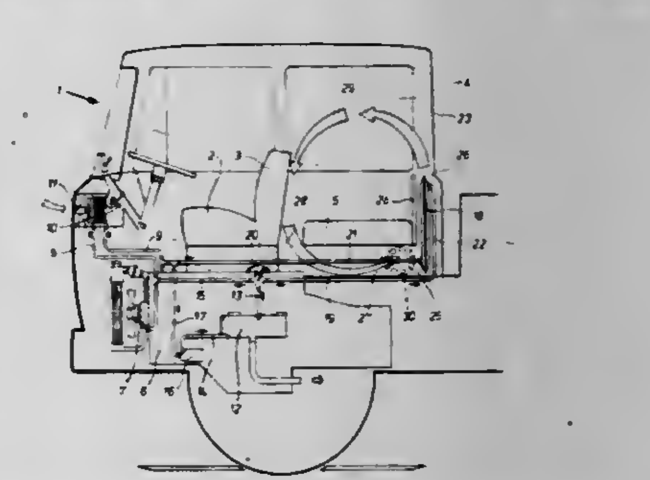

1. A motor vehicle with a passenger compartment comprising a heating system including a liquid heat conductor containing circuit, a heat exchanger with a hot air blower operable in association therewith for delivering heat to said passenger compartment, said heat exchanger being alternately connected to a portion of said liquid conductor circuit formed by a coolant circuit of an engine of the vehicle and a heater operable independent of said engine located in a first branch of said liquid conductor circuit, a heating element traversable by the liquid heat conductor located in a second branch of said liquid conductor circuit and valve means in said liquid conductor circuit between said first and second branches, said valve means (1) causing liquid heat conductor to flow from said heater to said heating element in a first position, (2) blocking flow of said liquid heat conductor from said first branch to said second branch while directing said flow to said heat exchanger in a second position, and (3) interconnecting said cooling circuit and said second branch while blocking flow from said first branch in a third position, and wherein a bunk and a partition are positioned in said compartment in a manner creating a flow path for air heated by said heating element over said partition, around said bunk and back to said heating element.

4,300,721
SYSTEM FOR COLLECTING LIQUID SPILLAGE AT RAIL FACILITIES
Brett Rich, Malad City, Id., assignor to Oneida General Corporation, Malad City, Id.
Filed May 23, 1980, Ser. No. 152,626
Int. Cl.^{3} E01B *1/00;* **E01C** *9/06*
U.S. Cl. 238—2 **10 Claims**

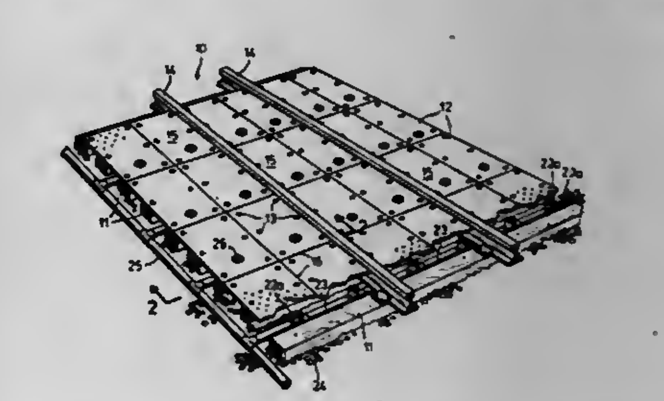

1. A system for collecting liquid spillage at rail facilities,

comprising a plurality of pan modules supported by the ties of a railroad track and secured together substantially fluid tight to provide a liquid spillage collector deck between and alongside the rails of the railroad track, each of said pan modules being molded to shape from a lightweight structural plastic material, being sufficiently small and lightweight to be easily handled by a workman, and each having provision for drainage therefrom; intersecting longitudinal and transverse reinforcing ribs extending along and depending from the bottoms of the respective pan modules as a reinforcing base therefor which rests on the said ties; and conduit means between the ties of the railroad track into which the pans drain.

4,300,722
VEHICLE TRACTION MAT
Robert Simmons, Chicago, Ill., assignor to Vision Metal Fabricators Corporation, Chicago, Ill.
Filed Jul. 11, 1980, Ser. No. 168,755
Int. Cl.³ E01B *23/00*
U.S. Cl. 238—14 **4 Claims**

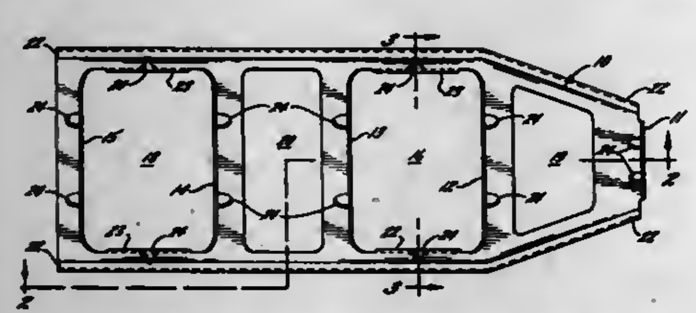

1. A traction mat to aid vehicle wheels for driving out of ice, snow, mud, sand and the like, comprising a unitary stamped, elongated metal member, said member having a plurality of spaced generally rectangular openings along its length, the forward portion of said member tapering inwardly toward a leading end, upwardly extending bent flanges transversely formed adjacent forward and rearward sides of said rectangular openings, an upwardly bent flange at the leading end of the mat member, the outer side edges of said member including trough shaped stiffening ribs, said generally rectangular openings having at least a pair of downwardly bent projecting gripping lugs formed at opposite sides thereof and said flanges and gripping lugs being formed with structural ribbing.

4,300,723
CONTROLLED OVERSPRAY SPRAY NOZZLE
Willibald P. Prasthofer, Huntsville, Ala., assignor to The United States of America as represented by the Administrator of the National Aeronautics and Space Administration, Washington, D.C.
Filed Feb. 29, 1980, Ser. No. 126,138
Int. Cl.³ B05B *1/26*
U.S. Cl. 239—499 **10 Claims**

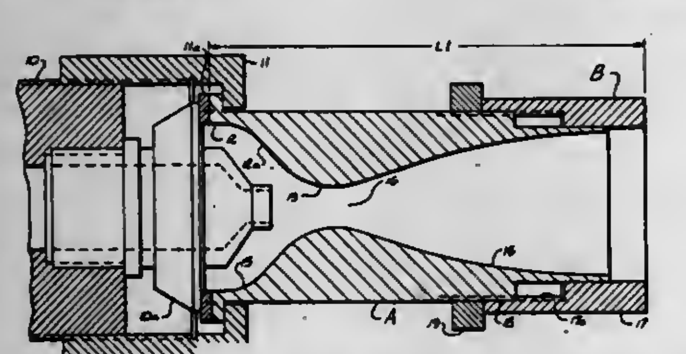

1. Overspray control apparatus for use with automatic spraying equipment for spraying a highly dense, multi-ingredient material having particles of varying density and controlling the overspray of lighter particles of said material in the spray coating; said spraying equipment being of the type which includes a spray gun having a nozzle exit for dispensing a jet spray, said overspray control apparatus comprising:
a nozzle adapted for affixation to said nozzle exit of said spray gun device;
said nozzle including a cylindrical inlet portion in which said spray gun nozzle exit is received;
a restricted throat portion spaced from said nozzle exit;
a convergent wall portion extending from said cylindrical inlet portion to said throat portion;
a juncture of said cylindrical inlet and convergent wall portions having a smoothly curved interior corner of predetermined radius of curvature affording a smooth transition between said cylindrical inlet and throat portions so as to avoid restrictions and flow interruption at said throat portions facilitating flow of said dense material therethrough;
said convergent wall portion terminating at said throat portion in a curved portion predetermined radius of curvature;
a divergent chamber extending from said throat portion outwardly to a final nozzle exit; and
said cylindrical inlet, convergent wall, restricted throat, and divergent chamber being designed as means to effectively co-mix the individual particle ingredients in said material and form a spray jet so as to substantially eliminate concentration of heavier particles on the inside of the spray and presence of lighter particles on the outside of the spray to effectively reduce overspray of the lighter particles which adversely affect the material properties of the spray coating.

4,300,724
APPARATUS FOR INTRODUCING AN ADDITIVE INTO A DRILLING MUD SYSTEM
James W. Reynolds, Houston, Tex., assignor to American International Tool Co., Inc., Houston, Tex.
Filed Sep. 24, 1979, Ser. No. 78,293
Int. Cl.³ A01C *3/06*
U.S. Cl. 239—654 **3 Claims**

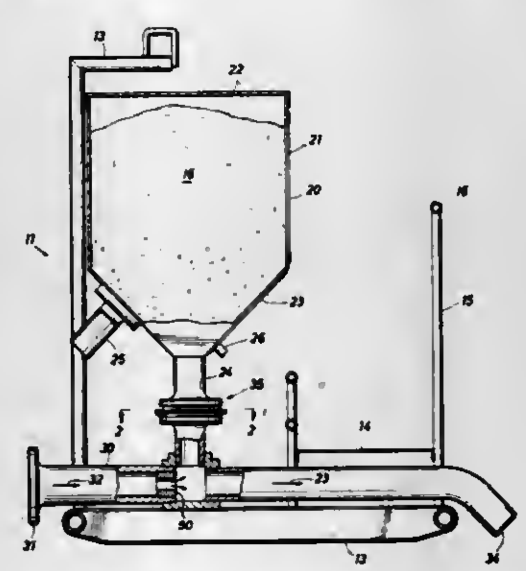

1. Apparatus for introducing an additive into a drilling mud system, which comprises:
a flow line for the flow of mud of said system therethrough;
a hopper for containing said additive said hopper being mounted above said flow line, said hopper having a funnel-shaped lower portion terminating in a neck connected to said flow line;
and a nozzle in said flow line substantially below said neck for mixing said additive with said mud;
a housing disposed in said neck;
a first orifice plate sliding mounted in said housing, said first orifice plate having a notch at one end thereof;
a second orifice plate slidingly mounted in said housing, said second orifice plate having a notch at one end thereof, wherein said notches of said first and second orifice plates overly each other to form an aperture;
a first arm substantially rigidly connected to said first orifice plate, said first arm extending outwardly through said housing;
a second arm substantially rigidly connected to said second orifice plate, said second arm extending outwardly through said housing;
a first operating linkage bar hingedly connected to said first arm; a plate mounted to said housing, said plate having a slot therein, said slot being radially aligned with the center of said aperature;
and a pin inserted through said first and second operating linkage bars and said slot.

4,300,725
APPARATUS FOR UNIFORMLY DISPENSING AND DISTRIBUTING MATERIAL
Edward F. Moherek, P.O. Box 157, Macungie, Pa. 18062
Continuation of Ser. No. 74,913, Sep. 13, 1979, abandoned. This application Oct. 14, 1980, Ser. No. 196,625
Int. Cl.³ A01C *17/00*
U.S. Cl. 239—684 **1 Claim**

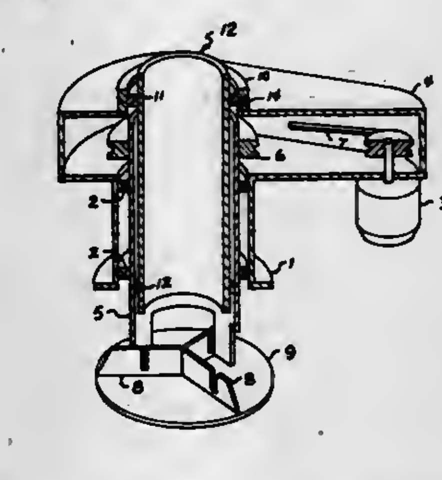

1. An apparatus for the delivery and distribution of free-flowing material by gravity and centrifugal force, which comprises: an elongated, vertical, hollow delivery tube rotatable about its vertical axis at variable, controlled speeds, said tube having in its upper portion an inlet for receiving said material and also having apertures in the walls at its base, thereby permitting the flow of said material therethrough; a distribution and deflection means, integral with said walls of the base of said delivery tube and rotating therewith which, in cooperation with said apertures, redirects the downward flow of material in said tube and impells it out through the apertures; a variable speed drive means external to said delivery tube for rotating said tube and said distribution and deflection means; a housing for enclosing and holding the upper portion of said delivery tube and said drive means, said housing comprising means for refraining the tube from vertical movement while allowing the tube to rotate about a fixed vertical axis; the lower portion of said delivery tube protrudes below said housing so that said material can flow through said apertures to the exterior thereof; wherein the drive means comprises a variable speed motor, said motor drives a first driven pulley, said first pulley is connected by a belt to a second pulley integral with the upper portion of said delivery tube to thereby rotate the delivery tube; wherein the distribution and deflection means comprises a relatively flat, circular disc integral with the walls of the delivery tube, said disc having mounted thereon vertically oriented and horizontally exteoding impeller blades for deflecting material through said apertures adjacent thereto, said blades extending from the interior of the tube through the apertures to the exterior of the tube, each of said blades having a vertical slot inside the tube; wherein the delivery tube further comprises a vertically sliding, adjustable closure tube located immediately adjacent to the interior wall of said delivery tube in annular relation therewith, said closure tube being moveable vertically; lock means integral with said housing and said closure tube for fixing the closure tube in a selected vertical position and thereby varying the sizes of the apertures in the walls of said delivery tube, the closure tube as it approaches its lower limit enters the slots in the blades to control the flow through said apertures with the flow being completely shut off when the closure tube reaches the lower limit.

4,300,726
HARVESTER SPOUT CONTROL DEVICE
Frederick W. Phillips, II, Leola, and Edward H. Priepke, Stevens, both of Pa., assignors to Sperry Corporation, New Holland, Pa.
Filed Dec. 27, 1979, Ser. No. 107,675
Int. Cl.³ B02C *18/22*
U.S. Cl. 241—101.7 **26 Claims**

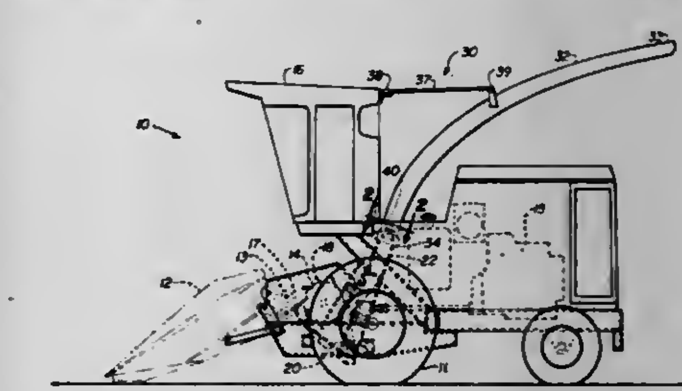

1. A forage harvester for harvesting crop material by comminution thereof comprising:
a frame adapted for movement across a field;
a crop comminution means supported by said frame for reducing crop material into relatively small particles;
a crop discharge means proximate to said crop comminution for the discharge of said reduced crop material away from said crop comminution means;
an upwardly inclined discharge deflection means cooperable with said crop discharge means for directing the flow of reduced crop material therefrom, said deflection means having a lower base member connected to said crop discharge means, a distal discharge end elevated above said lower base member and a centerline extending from said crop discharge means through said base member to said discharge end substantially corresponding to the path of travel of said discharged crop material, said centerline having a substantially linear portion extending along said crop discharge means to said base member, said substantially linear portion being disposed at an acute angle to a vertical line projecting through said base member;
a rotation means mounted on said discharge deflection means proximate to said base member for the selective rotation of said discharge deflection means about an axis corresponding to said substantially linear portion of said centerline;
a pivot means mounted on said discharge deflection means proximate to said base member to permit a vertical movement of said discharge end;
a support means pivotally interconnecting said discharge deflection means and said frame to maintain a preselected vertical position of said discharge end while allowing movement thereof in a horizontal plane, said support means including a pivotal connection with said frame being in substantially vertical alignment with said pivot means, whereby, upon rotation of said discharge deflection means by said rotation means, said discharge end is automatically rotated in a substantially horizontal plane; and
drive means for powering said crop comminution means, said crop discharge means and said rotation means.

4,300,727
MANDREL FOR A BALL WINDING MACHINE
Manfred Koch, Pfäffikon, and Ernst Bosshard, Hinwil, both of Switzerland, assignors to G & W Machinery Inc., Pfaffikon, Switzerland
Filed Jun. 28, 1979, Ser. No. 53,414
Int. Cl.³ B65H *54/64, 75/24*
U.S. Cl. 242—2 **3 Claims**

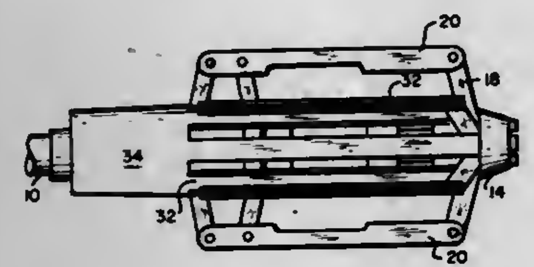

1. A mandrel for winding yarn into self-supporting balls comprising a central rod having a hub at one end, a collar freely movable axially over said rod and a plurality of sets of arms and connecting links pivotly secured between the hub and collar, and shiftable on movement of said collar relative to said rod from a first collapsed position having a small diameter to a second open position having a larger diameter, a plurality of flat blades having an arcuate exterior surface arranged concentrically about said central rod and spaced therefrom, each of said blades being respectively connected at one end to said collar extending cantilevered over said rod with the ends opposite said collar free of connection with each other and said hub and located between adjacent ones of said sets of arms and connecting links, said blades defining a radially resilient cylinder having a diameter intermediate the diameter defined by said arms and links in the first and second position open at the end opposite said collar to form a smooth surface from which yarn wound thereon can be easily doffed.

4,300,728
APPARATUS FOR PACKAGING STRAND
Gerald R. Andre, Monroeville, Pa.; David C. Wingate, Amarillo, Tex., and Thomas O. Matteson, Columbus, Ohio, assignors to Owens-Corning Fiberglas Corporation, Toledo, Ohio
Filed May 29, 1980, Ser. No. 154,250
Int. Cl.³ B65H *54/02*
U.S. Cl. 242—18 A **9 Claims**

1. In apparatus for packaging strand having:
a first driven rotatable collet having (a) a first primary collection region adapted to collect a first strand thereon, (b) a second primary collection region adapted to collect a second strand thereon, and (c) a temporary collection region;
a second driven rotatable collet having (a) a first primary collection region adapted to collect the first strand thereon, (b) a second primary collection region adapted to collect the second strand thereon, and (c) a temporary collection region;
an indexible head having said first collet and said second collet journaled therein; wherein the improvement comprises:
a first member adapted for movement along the first and second collets, said first member having a first edge and a first channel separated by a finger extending outwardly from said member;
a second member adapted for movement along the first and second collets, said second member having a base edge and a second channel;
and a third member located adjacent said first and second members, said first, second and third members being oriented such that (a) as said first and second members move along the collets the first strand being collected at the first primary collection region of the first collet and the second strand being collected at the second primary collection region of the first collet are moved to the temporary collection region of the first collet, the first and second strands being separated by said finger of said first member wherein the first strand is in contact with said first edge, said first and second strands being in contact with said base edge of said second member, (b) as said head is indexed, said second strand is captured in said first channel of said first member and in said second channel of said second member in the absence of capturing said first strand in said second channel, while the first and second strands are collected at the temporary collection region, and (c) as said first and second members are returned to the retracted position from the extended position the first strand is released to engage the first primary collection region of the second collet and the second strand is contacted by said third member to remove said second strand from said first channel and said second channel such that said second strand engages the second primary collection region of the second collet to permit continous collection of such strands.

4,300,729
TAPE CLAMP FOR MAGNETIC TAPE MAGAZINE
Kengo Oishi, and Osamu Suzuki, both of Odawara, Japan, assignors to Fuji Photo Film Co., Ltd., Minami-ashigara, Japan
Filed Mar. 10, 1980, Ser. No. 128,889
Claims priority, application Japan, Mar. 30, 1979, 54-41486[U]
Int. Cl.³ B65H *75/28*
U.S. Cl. 242—74.1 **5 Claims**

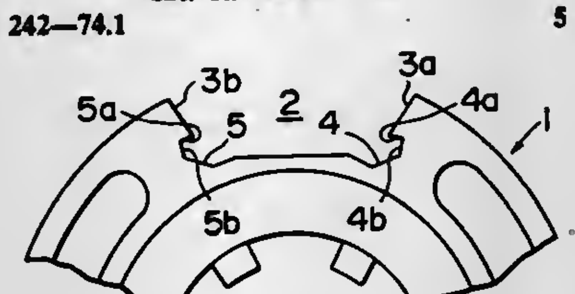

1. A tape clamp to be fitted into a recess provided in the peripheral surface of a hub in a magnetic tape magazine to fix an end of a magnetic recording tape to the hub, comprising a body portion having a curved outer surface, a pair of lugs projecting from the inner surface of the body portion one each at its opposite ends, and a pair of ribs, each rib connecting a free end of a lug and an intermediate point on the inner surface of the body portion between the ends thereof, the ribs being inwardly and resiliently deflected when the tape clamp is fitted into said recess, said curved outer surface of the body portion having an inherent curvature slightly larger than that of the peripheral surface of the hub and being further bowed to have a curvature substantially equal to that of the peripheral surface of the hub when the ribs are deflected by fitting the tape clamp into the recess of the hub.

4,300,730
DISENGAGEABLE LOCKING MECHANISM IN A FISHING REEL
Karl L. Carlsson, Asarum, and Bertil E. Tansson, Karlshamn, both of Sweden, assignors to Abu Aktiebolag, Sweden
Filed Jun. 27, 1980, Ser. No. 163,603
Claims priority, application Sweden, Jul. 2, 1979, 7905746
Int. Cl.³ A01K *89/01, 89/02*
U.S. Cl. 242—84.2 R **8 Claims**

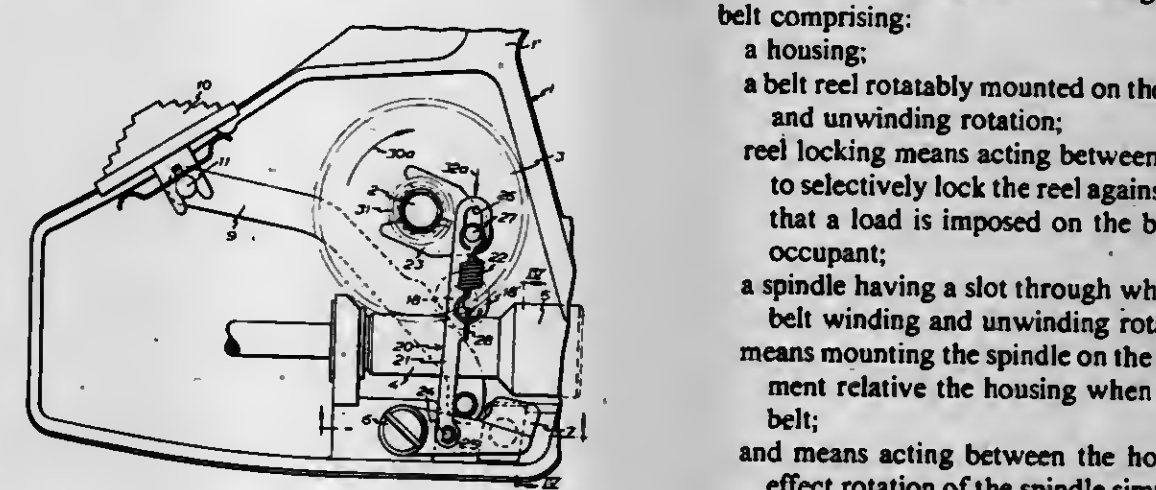

1. In a fishing reel having rotatable parts, a hand crank and transmission means comprising a plurality of rotatable members and connected to be driven by the hand crank and to rotate said parts, a device comprising a disengageable anti-reverse mechanism for a rotatable member, such as a line pick-up member in a non-rotary type reel, said rotatable member being rotatable by said hand crank via said transmission means (2, 3, 4), said anti-reverse mechanism comprising a ratchet (5) rotatable by means of the hand crank, a pawl (7) and an actuating means (20) for shifting said pawl between an operative position for cooperation with said ratchet and a free position in relation to said ratchet, said ratchet, in the operative position of the pawl (7), being rotatable in a first rotational direction but being locked by the pawl against rotation in a second opposite direction of rotation, said actuating means (20) comprising a link arm (21) connected at one end to the pawl, and a friction clutch means frictionally actuated by one of said rotatable parts of the fishing reel and connected to said link arm for pivoting the pawl out of engagement with said ratchet when driven by the hand crank; said friction clutch means comprising a clutch member connected in a sliding clutch engagement to one of said rotatable transmission members, pivot means (26, 27) connected to said link arm (21) at the other end of the latter to said clutch member (23) in a manner to permit pivotal movement and a restricted lost motion therebetween, and elastic means (22) connecting said clutch member and said link arm and yieldably acting against any lost motion between said link arm (21) and said clutch member, whereby said link arm and said pawl in said operative position of the latter in engagement with said ratchet (5) permits a restricted rotational movement back and forth of said clutch member (23) without causing any shifting of said pawl.

4,300,731
BELT ROLL-UP RETRACTOR
Joseph D. Kondziola, Troy, Mich., assignor to General Motors Corporation, Detroit, Mich.
Filed May 22, 1980, Ser. No. 152,353
Int. Cl.³ A62B *35/02;* **B65H** *75/48*
U.S. Cl. 242—107.2 **6 Claims**

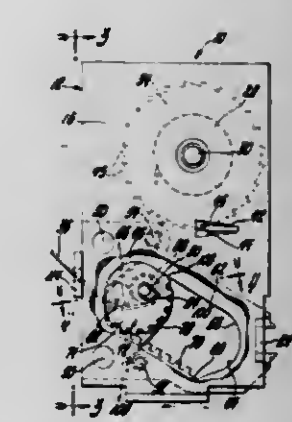

1. A seat belt retractor for winding and unwinding a restraint belt comprising:
a housing;
a belt reel rotatably mounted on the housing for belt winding and unwinding rotation;
reel locking means acting between the housing and the reel to selectively lock the reel against belt winding rotation so that a load is imposed on the belt during restraint of an occupant;
a spindle having a slot through which the belt passes during belt winding and unwinding rotation of the reel;
means mounting the spindle on the housing for bodily movement relative the housing when a load is imposed on the belt;
and means acting between the housing and the spindle to effect rotation of the spindle simultaneous with the bodily movement of the spindle whereby the belt is rolled around the spindle to cinch the belt against movement in the unwinding direction independently of the locking of the reel by the reel locking means.

4,300,732
UP-AND-DOWN PULLEY DEVICE FOR SUSPENSION LAMPS AND THE LIKE
Marco Gaeta, Monza, Italy, assignor to Aromec S.r.l., Italy
Filed Oct. 30, 1979, Ser. No. 89,673
Claims priority, application Italy, Apr. 11, 1979, 21766 A79
Int. Cl.³ B65H *75/48*
U.S. Cl. 242—107.3 **17 Claims**

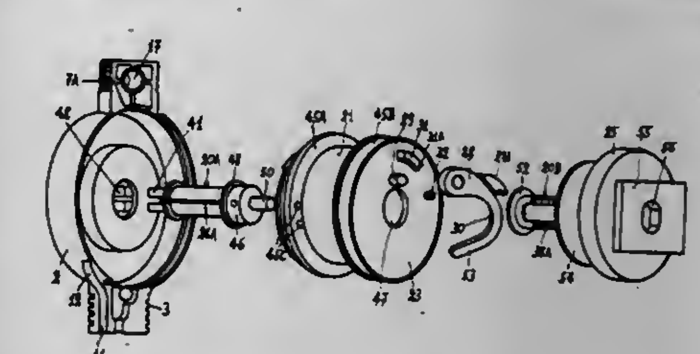

1. A device for adjustably suspending articles at various heights, having an adjustable friction system for controlling article descent, comprising:
a casing;
means defining a central stationary axis of rotation disposed in said casing;
a suspension wire winding drum freely and rotatably mounted on said axis means;

means for rotationally biasing and winding drum in the rewinding direction;
a braking wheel freely and rotatably mounted on said axis means;
a first metal member on said axis means on one side of said braking wheel;
a second metal member non-rotatably mounted on said axis means on the other side of said braking wheel, said second metal member being further disposed in a corresponding seat in said casing, said axis means including a threaded metal stem portion extending from said second metal member through said casing;
threaded means on said stem for pressably engaging said second metal member, for manually adjusting the pressure of said first metal member and second metal member on said braking wheel; said wheel, first metal member, second metal member seat, stem and manual adjusting means forming said friction system; and,
means for connecting said winding drum to said braking wheel in response to said drum rotating in the unwinding direction, said connecting means being disengaged in the opposite direction, whereby descent and positioning of said article is regulated by said friction system and rewinding said wire during ascent of said article is independent of said friction system.

4,300,733
SEAT BELT TAKE-UP DEVICE PROVIDED WITH AN EMERGENCY-LOCKING MECHANISM
Masaru Morinaga, Yamato, Japan, assignor to NSK-Warner K.K., Tokyo, Japan
Filed Dec. 19, 1979, Ser. No. 105,141
Claims priority, application Japan, Dec. 29, 1978, 53-163078
Int. Cl.³ A62B *35/02;* B65H *75/48*
U.S. Cl. 242—107.4 A **5 Claims**

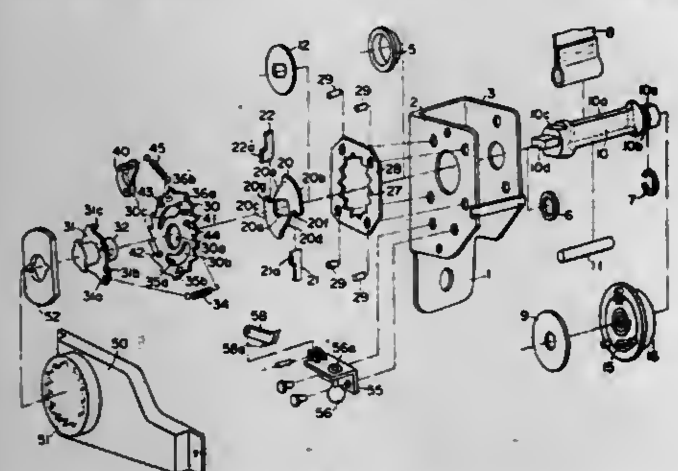

1. A seat belt retractor for use in a vehicle, the retractor including a housing, a webbing take-up shaft journalled in the housing, the shaft being biased in a webbing retracting direction, and an emergency-locking mechanism comprising:
a rotatable member supported on said shaft in a manner permitting relative rotation between said member and said shaft;
a support member non-rotatably supported on said shaft in axially adjacent relationship to said rotatable member;
a first pawl member associated with said support member for movement between a lock position and a normal non-lock position, said first pawl member being biased toward said normal non-lock position;
engaging means on said rotatable member for displacing said first pawl member from said normal non-lock position to said lock position responsive to relative rotation occurring between said rotatable member and said shaft;
first lock means associated with said housing for engaging said first pawl member when said first pawl member is displaced into said lock position, thereby restraining said first pawl member and arresting rotation of said support member and said shaft;
a second pawl member supported on said rotatable member for movement between a lock position and a normal non-lock position;
means biasing said second pawl member to its normal non-lock position;
means for providing rotation of said rotatable member with said shaft when said shaft is rotated from rest in a webbing draw-out direction;
an inertia member rotatably supported on said shaft for engagement with said second pawl member, said inertia member being displaceable relative to said shaft by inertial force from a normal first position to a second position responsive to an angular acceleration of said shaft in the webbing draw-out direction above a predetermined value, displacement of said inertia member from said first position to said second position effecting movement of said second pawl member from its normal non-lock position to its lock position; and
second lock means associated with said housing for engaging said second pawl member when said second pawl member is displaced to its lock position, so as to arrest said second pawl member and said rotatable member, thereby establishing relative rotation between said rotatable member and said shaft effective for displacing said first pawl member from its non-lock to its lock position whereby said first pawl member engages said first lock means to arrest the rotation of said shaft.

4,300,734
PACKAGED STRAND
William A. Green, Swanton, and William B. Parsons, Sylvania, both of Ohio, assignors to Owens-Corning Fiberglas Corporation, Toledo, Ohio
Filed Oct. 20, 1980, Ser. No. 198,689
Int. Cl.³ B65H *55/02*
U.S. Cl. 242—170 **6 Claims**

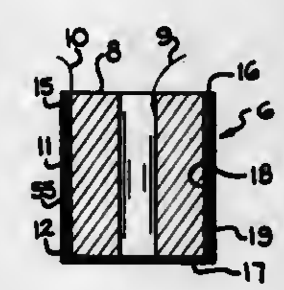

1. In a package having a wound body of strand having an outer cylindrical portion and an elastic membrane convolutely wound about the cylindrical portion in a plurality of plies, the membrane being of a sufficient thickness and being stretched sufficiently to partially collapse as the strand is withdrawn from the interior of the body, such that the membrane mechanically captures the strand of the outer cylindrical portion to retain such strand along said membrane until said strand is withdrawn from the package wherein the improvement comprises: a control layer of material having different physical characteristics than said membrane positioned between the plies of said membrane to control the collapse of said membrane to a predetermined amount.

4,300,735
TAPE RECORDER
Hiroki Ichikawa, Hachioji, Japan, assignor to Olympus Optical Co., Ltd., Tokyo, Japan
Filed Oct. 25, 1979, Ser. No. 87,962
Claims priority, application Japan, Oct. 27, 1978, 53-148081[U]
Int. Cl.³ G03B *1/04;* G11B *15/32*
U.S. Cl. 242—201 **4 Claims**

1. A tape recorder having a driving mechanism for enabling

tape rewinding at a higher speed and a lower speed comprising: a tape winding reel; a tape rewinding reel; a changeover operation member adapted to be set to effect rewinding of said tape; a fast-feed operation member adapted to effect feeding of said tape at said higher speed; a main switch adapted to set said driving mechanism for operation at said lower speed; a high-speed switch adapted to be actuated by said fast-feed operation member to set said driving mechanism for operation at said higher speed; a first rotary lever adapted to actuate said main

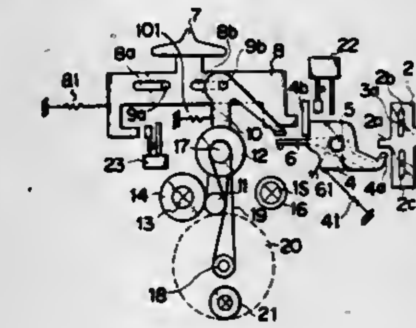

switch in response to actuation of said first rotary lever by said changeover operation member; a second rotary lever adapted to be engaged by said changeover operation member when said changeover operation member is set to effect rewinding of said tape; and a tape driving member for transmitting a tape driving force to either said tape winding reel or said tape rewinding reel, said tape driving member being actuated by said second rotary lever to transmit a tape driving force to said tape rewinding reel in response to actuation thereof by said second rotary lever.

4,300,736
FIRE CONTROL SYSTEM
Perry A. Miles, Lexington, Mass., assignor to Raytheon Company, Lexington, Mass.
Filed Aug. 17, 1979, Ser. No. 68,860
Int. Cl.³ F41G *7/00*
U.S. Cl. 244—3.13 **1 Claim**

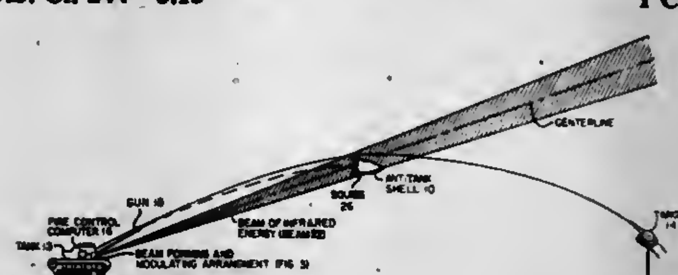

1. A fire control system for guiding a rotating artillery shell in flight from a gun to a target, such system comprising:
(a) sensor means, disposed at a point near the periphery of the base of the rotating artillery shell, for producing an electrical signal in response to infrared energy impinging upon such means;
(b) means for projecting a beam of infrared energy to impinge on the sensor means, such beam being modulated by the image of a rotating reticle whereby the resulting electrical signal out of the sensor means is indicative of the spacing and direction between the centers of such beam and projectile; and
(c) means for nulling the spacing between the centers of the beam and the rotating projectile, such means comprising a plurality of explosive squibs disposed about the rotating shell and logic circuitry, responsive to the resulting electrical signal out of the sensor means, to produce a firing signal when the spacing between the centers of the beam and the projectile exceeds a predetermined value and an unfired one of the explosive squibs is positioned to null, when fired, such spacing.

4,300,737
SATELLITE DEPLOYMENT SYSTEM WITH REMOTELY CONTROLLED RELOCKING CAPABILITY
Allan B. Byrne, Los Angeles; Richard G. Otis, Whittier, and Stephen A. Robinson, Sepulveda, all of Calif., assignors to Hughes Aircraft Company, Culver City, Calif.
Continuation of Ser. No. 910,566, May 30, 1978, abandoned. This application Apr. 21, 1980, Ser. No. 142,483
Int. Cl.³ B64G *1/00;* B64D *9/00*
U.S. Cl. 244—158 R **1 Claim**

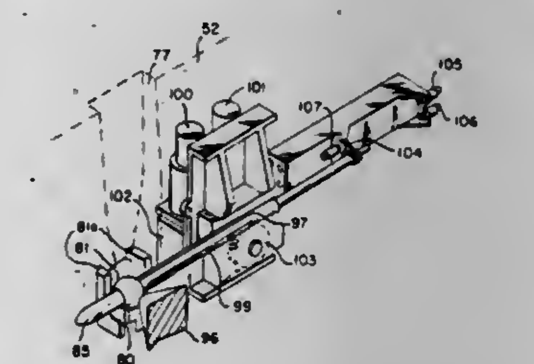

1. A locking device for use in a spacecraft deployment system wherein a cradle in a space shuttle is used for gyroscopically launching the spacecraft and wherein said spacecraft has at least one trunnion adapted for engaging at least one mating surface on the cradle and with said trunnion and said mating surface each having an opening formed therein such that when said spacecraft is mounted in the cradle said openings are in alignment, said locking device comprising:
a rack and pinion gear combination;
a bolt on one end of said rack;
a differential gear arrangement coupled to drive said pinion gear such that said bolt may be moved into and out of said opening in said mating surface and said opening in said trunnion; and
first and second reversible motors coupled to drive said differential gear arrangement;
whereby either or both motors may drive said bolt so as to either lock or unlock said trunnion and said mating surface.

4,300,738
DUCT SUPPORT STRUCTURE
Thomas B. Whinfrey, Media, Pa., assignor to The Boeing Company, Seattle, Wash.
Filed Aug. 18, 1980, Ser. No. 178,879
Int. Cl.³ E21F *17/02;* F16L *3/00*
U.S. Cl. 248—62 **3 Claims**

1. A support for a thin wall, composite duct comprising: a circular clamp ring formed in the shape of a tube having the ends of said tube disposed radially outward about the circumference of said tube, said ring having first and second members positioned so that they are opposed with respect to each other along an interface line, said interface line being at an angle

between 30 and 45 degrees with respect to the perimeter of said ring body, said first and second members each being tapered and having a pointed end, said first and second members constituting laterally resilient jaws to retain the lightweight composite duct without use of other fastening devices, said first and second members having a thickness which allows insertion of a thin walled duct by compression of the duct against said first and second members, said first and second members enclosing about said duct to provide support therefor; and a plate-like mounting bracket integrally formed with said ring, said bracket being positioned on the outer surface of said tube so that it is located opposite the midpoint of said interface line and so that the plane of said bracket is perpendicular to the axis of said tube.

4,300,739
ADJUSTABLE POLE-MOUNTED MAIL BOX SUPPORT
Lloyd P. Sande, West Star Rte., Two Harbors, Minn. 55616
Filed Apr. 14, 1980, Ser. No. 140,129
Int. Cl.³ E04G *3/00*
U.S. Cl. 248—219.4 **1 Claim**

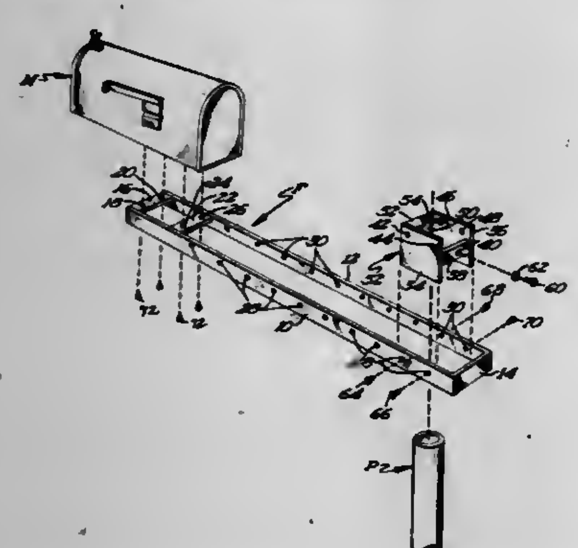

1. An adjustable pole-mounted mail box support comprising:
(a) an elongated support frame, including first and second spaced side members each having a series of spaced holes,
(b) a collar, having first and second spaced sidewalls connected to a cross bar and front wall,
(c) securing means for engagement through the holes of said side frame members and said collar for adjustably connecting said side frame members at selectable positions on said collar,
(d) means for adjustably positioning said collar on a pole to place said frame at various positions on a pole including a bolt carried by said cross bar for pressure engagement with said pole and,
(e) means for securing a mail box on said support frame.

4,300,740
EASILY MOVABLE SHELF FOR STEP LADDER
Robert M. Killian, 33 W. Blithedale #5, Mill Valley, Calif. 94941
Filed May 12, 1980, Ser. No. 148,794
Int. Cl.³ E06C *7/14*
U.S. Cl. 248—238 **4 Claims**

1. A work support platform for use with a step ladder comprising:
a flat shelf;
a bracket extending downwardly and then forwardly from one the back edge of said shelf to engage slidably over a ladder step from the back edge thereof;
a first hole through said shelf from top to bottom thereof spaced from said back edge thereof slightly more than the width of a ladder step;
a first pin freely slidable in said first hole so as to drop, when free of restraining surfaces, and depend below the under surface of said shelf and engage the front edge of the ladder step if said shelf is moved toward the back thereof;
a second hole through said shelf spaced from said back edge thereof slightly more then the width of the top ledge of a ladder;
a second pin freely slidable in said second hole so as to drop,

when free of restraining surfaces to depend below the undersurface of said shelf and engage the front edge of said top ledge if said shelf is moved toward the back thereof; and
enlargements on the ends of said first and second pins to limit movement thereof and to prevent separation thereof from said shelf.

4,300,741
SWINGABLE HANGER SUPPORT MEMBER
R. Paul Kashden, Hewlett, N.Y., assignor to Closet Systems Corp., Hewlett, N.Y.
Continuation-in-part of Ser. No. 951,977, Oct. 16, 1978, Pat. No. 4,209,156. This application Nov. 23, 1979, Ser. No. 96,995
Int. Cl.³ E04G *3/00*
U.S. Cl. 248—289.1 **4 Claims**

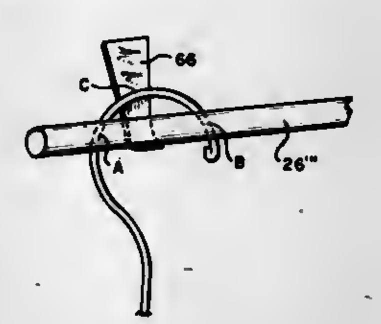

1. A longitudinal hanger support member adapted to have a conventional hanger releasably supported thereby adjacent one end thereof and mounted for pivotal movement about the other end thereof comprising
(a) a laterally extending longitudinal member mounted for pivotal movement about one end thereof,
(b) said longitudinal member being provided adjacent but slightly spaced from the other end thereof with a substantially planar formation which extends upwardly and sidewardly from at least one side thereof,
(c) said hanger support member being adapted to receive the hook of said conventional hanger between said formation and said longitudinal member whereby three spaced segments of said hook are wedged so as to suspend said hanger in a vertical plane.

4,300,742
CANE HOLDER
Douglas C. Hunn, 4000 W. 88th St., Bloomington, Minn. 55437
Filed Aug. 9, 1979, Ser. No. 65,123
Int. Cl.³ F16M *13/00*
U.S. Cl. 248—360 **16 Claims**

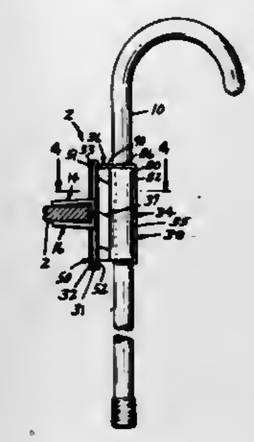

1. A holding device for removable attachment of an elongated object to a support surface, comprising:
(a) a main body member having front and rear faces and left and right sides;
(b) first and second clamp wings, having front and rear ends, each of said clamp wings having guide pin means affixed thereto for slideable engagement with said body member, said clamp wings being pivotable from a clamping position and a storage position;
(c) means formed in said body member for slideably receiving said guide pin means;
(d) means affixed to said rear face of said body member for removably holding the elongated object;
(e) a first circular clamp made of elastic material attached to said rear face of said body member;
(f) a second circular clamp made of elastic material capable of snugly receiving said object within said second clamp and said second clamp being capable of being snugly received within said first clamp; and
(g) said first clamp including means for adjusting the tension by which said second clamp is snugly received within said first clamp.

4,300,743
MUSIC STAND TRAY ACCESSORY
Earl R. Morris, San Diego, Calif., assignor to Eric Beheim, San Diego, Calif.
Filed Dec. 26, 1979, Ser. No. 106,691
Int. Cl.³ A47B *19/00, 97/04*
U.S. Cl. 248—441 R **9 Claims**

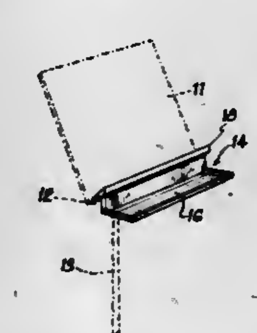

1. A musical instrument accessory tray for a sheet music stand having a generally upright rear sheet music support member with a forwardly projecting sheet music support ledge, said tray comprising:
a. a tray element;
b. clamping means mounted to said tray element and adapted to securely engage said ledge;
c. said clamping means being dimensioned and oriented relative to said tray element such that when engaged on said ledge, said tray is securely supported substantially horizontally adjacent said ledge.

4,300,744
APPARATUS FOR ENABLING MOVEMENT OF A BINDER BETWEEN STORED AND READABLE POSITIONS RELATIVE TO A SUPPORT
Robert H. Popper, Jr., 24 Raynold Rd., Mountain Lakes, N.J. 07046
Filed Nov. 14, 1978, Ser. No. 960,726
Int. Cl.³ A47B *97/04*
U.S. Cl. 248—447 **4 Claims**

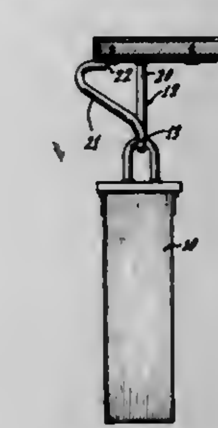

1. An apparatus adapted to interconnect a binder to a support to enable movement of the binder between stored and readable positions relative to the support, comprising:
(a) a first link, securable to the support, contoured in shape, which forms a closed link with the support, the contour of which includes a substantially J-shaped first end portion, a substantially straight intermediate portion curved at the ends thereof, extending at an angle from, and in a plane substantially perpendicular to, the plane of the J-shaped first end portion, and a substantially straight second end portion extending from, and in the plane of, the intermediate portion, generally perpendicular to the first end portion; and
(b) a second link, rigidly securable to the binder, interconnectable with the first link, contoured in shape, slidably movable along a portion of the contour of the first link such that the binder is movable in a limited constrained path therealong between stored and readable positions, which forms a closed loop with the binder.

4,300,745
DEVICE FOR HANGING A DRAPERY ROD BRACKET ON WALLBOARD
Francis C. Peterson, St. Charles, Ill., assignor to Illinois Tool Works Inc., Chicago, Ill.
Filed Sep. 26, 1979, Ser. No. 78,862
Int. Cl.³ F16M *13/00*
U.S. Cl. 248—546 **10 Claims**

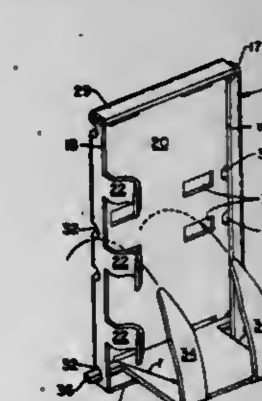

1. An assembly for securing a drapery rod to wallboard or

the like, said assembly comprising anchor means a mounting plate means, and a bracket, said mounting plate means comprising a member which is generally rectangular in plan and C-shaped in cross section, one end of the "C" being formed by one edge of the plate means being turned back upon itself forming a U-shaped portion, the edge opposite to said one edge having a plurality of bracket-retaining spring fingers, said anchor means including at least two anchor members at least one thereof having one or more arcuate projection(s) for penetrating the wallboard and maintaining said mounting bracket means in fixed position with respect thereto, said bracket being a generally L-shaped member defined by a first shorter leg and a second longer leg said shorter leg having a free end and an end which adjoins said longer leg, said free end engaging in the U-shaped portion of said mounting plate means, said longer leg having a plurality of recesses equal in spacing for bracket retaining spring fingers, said fingers engaging in the recesses to maintain the bracket assembled to said mounting plate means.

4,300,746
APPARATUS AND METHOD FOR MANUFACTURING CONCRETE STRUCTURAL MODULES
John F. Schoen, Toledo, Ohio, assignor to Schoen Investments, Inc., Toledo, Ohio
Continuation-in-part of Ser. No. 833,169, Sep. 14, 1977, abandoned. This application Apr. 25, 1979, Ser. No. 33,190
Int. Cl.^{3} B28B *7/02, 7/22*
U.S. Cl. 249—13 **6 Claims**

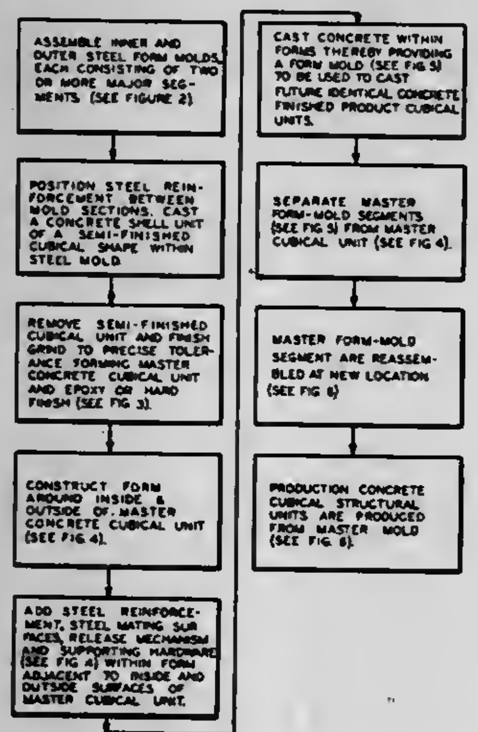

1. Apparatus for casting dimensionally uniform cementitious modules comprising, in combination, two outer mold segments separable along a diagonal parting plane, each of two said outer mold segments having two mold walls orientated substantially normal to each other, said two outer mold segments fabricated of cast, cementitious material and defining two pairs of first parallel faces, each of said pair of faces disposed parallel to and on opposite sides of said parting plane, two pairs of first metallic, parallel plates, one of each of said pairs of first plates anchored to said cementitious material and disposed on a respective one of said pairs of first faces and defining abutting outer mold segment surfaces, means for releasably securing said two outer mold segments to one another, four inner mold segments separable along four oblique parting planes each of said four inner mold segments having two mold walls orientated substantially normal to one another, said four inner mold segments fabricated of cast, cementitious material and defining four pairs of parallel second faces, disposed parallel to and on opposite sides of a respective one of said oblique parting planes, four pairs of second metallic, parallel plates one of each of said pairs of second plates anchored to said cementitious material and disposed on a respective one of said pairs of second faces and defining abutting inner mold segment surfaces, and means for releasably securing said inner mold segments.

4,300,747
FLAT SHOE FORM TIE BRACKET FOR USE WITH CONCRETE FORMS
Arthur J. Brow, 3303 S. 40th St., Phoenix, Ariz. 85040
Filed Nov. 10, 1980, Ser. No. 205,673
Int. Cl.^{3} E04G *17/06*
U.S. Cl. 249—217 **4 Claims**

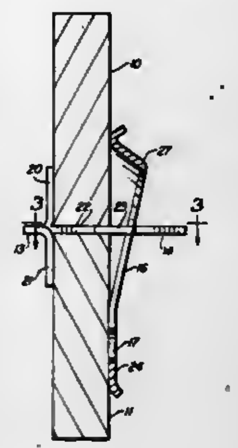

1. A snaptie shoe assembly for use in holding walls of a concrete form together comprising:
- a snaptie formed of a flat strip of metal of rectangular cross-section having wedge engaging slots at each end thereof arranged on opposite edges of said strip at a common point along its edges,
- said snaptie comprising a pair of tabs formed from said strip to extend laterally thereof inwardly of said wedge engaging slots for bearing against the inside walls of vertically positioned panels of a wall of the form,
- the periphery of the edges of at least a part of said slots being conformed to engage and bear on the outer surface of a rib of a shoe, and
- a shoe for snugly fitting over said snaptie in the zone of said slots in wedging fashion,
- said shoe defining a rib having a narrow axial slot therein and presenting a region of high offset and a region of low offset,
- said shoe being provided with a flat base with one face engaging the outer surfaces of the panels of the wall of the form and with the rib thereof extending outwardly of its other flat surface,
- said rib being interposed between the walls of the form and said part of said slots of the snaptie with the outer surface of said rib around said slot snugly engaging said part of said slots.

4,300,748
AXIAL FLOW VALVE
Bruce K. Kreeley, Bristol, Pa., assignor to The Singer Company, Stamford, Conn.
Continuation-in-part of Ser. No. 112,682, Jan. 16, 1980, abandoned. This application Nov. 17, 1980, Ser. No. 207,540
Int. Cl.^{3} F16K *31/126*
U.S. Cl. 251—5 **10 Claims**

1. A valve for regulating the flow of fluid therethrough comprising:
- a valve body having a first end, a second end, a cylindrical opening extending from said first end to said second end, said cylindrical opening defining the interior of said valve body, at least one first open channel extending from said first end to said valve body interior and at least one second open channel extending from said valve body interior to said second end;

- a flexible tubular sleeve located within said cylindrical opening;
- means for providing a fluid path from a fluid inlet to said at least one first open channel;
- means for providing a fluid path from said at least one second open channel to a fluid outlet;
- means for providing external fluid communication to the interior of said sleeve;

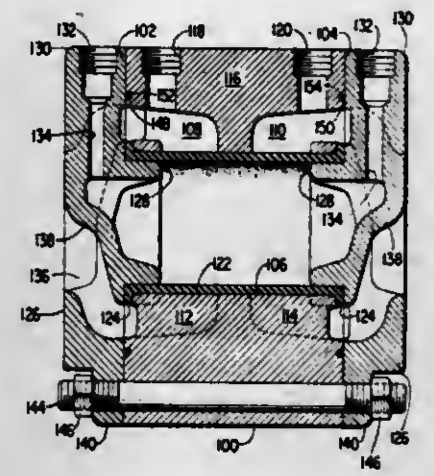

- a manifold mounted on said valve body and having a first port providing external communication to said at least one first open channel and a second port providing external communication to said at least one second open channel; and
- an end closure member adapted to cover said first end of said valve body and including both said means for providing a fluid path to said at least one first open channel and said means for providing external fluid communication to the interior of said sleeve.

4,300,749
THROTTLE VALVE
Anthony J. Ferro, York, and Holliday L. Goldman, Red Lion, both of Pa., assignors to Allis-Chalmers Corporation, Milwaukee, Wis.
Filed Dec. 13, 1979, Ser. No. 103,279
Int. Cl.^{3} F16K *1/18*
U.S. Cl. 251—124 **3 Claims**

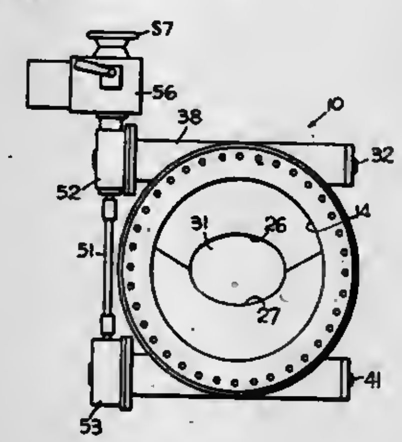

1. A flow control valve comprising a tubular valve body having a flow passage therethrough provided with an inlet and an outlet end, said tubular valve body being uniformly tapered in a converging and diverging fashion to form a venturi extending through the valve body from the inlet end to the outlet end of the flow passage;
- fluid flow regulating means comprising a plurality of individually overlapping curved vanes constructed and arranged to conform to the interior of said valve body and in the same direction, said vanes being cooperatively arranged within said valve body to form an essentially frusto-conic assembly of said vanes defining a flow regulating orifice of variable diameter at the throat of said venturi for varying the fluid flow through said valve, said vanes being adjustably supported within said valve body in position to act upon fluid flowing through the valve body to effect a regulation of the flowing fluid;
- a plurality of shafts, one for each vane, extending into the interior of said valve body transverse to the flow passage and operably connected to said vanes to effect selective simultaneous adjustment of said vane regulating means when actuated; and
- an actuator carried by said valve body externally thereof and operably connected to said shafts to drive said shafts wherein the vanes are selectively positioned simultaneously to effect a desired regulation of the flow of fluid through the valve.

4,300,750
POSITION INDICATING VALVES
William A. Valka, Spring, Tex., and Steven A. Porter, Houston, Tex., assignors to Armco Inc., Middletown, Ohio
Filed Feb. 11, 1980, Ser. No. 120,048
Int. Cl.^{3} F16K *1/36, 1/42*
U.S. Cl. 251—323 **6 Claims**

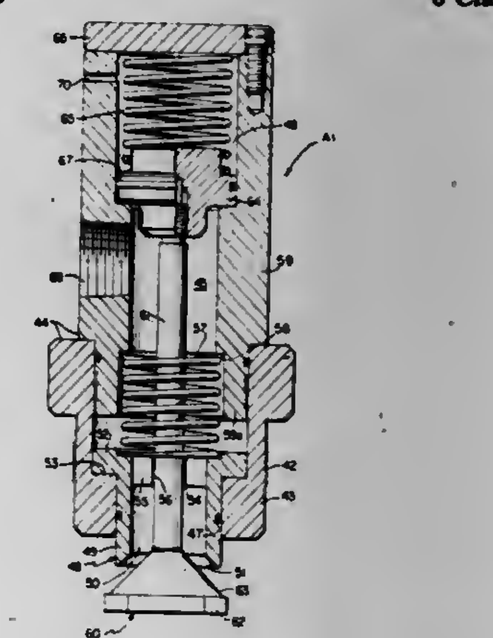

1. In a valve for providing a change in fluid pressure as a remote indication of the position of an object, the combination of
- body means defining
  - an internal chamber,
  - a cylinder,
  - a guide bore, and
  - a stop shoulder located between the cylinder and the chamber and facing away from the chamber,
  - the chamber being located between and communicating with the cylinder and the guide bore,
  - the guide bore opening outwardly of the body means and being coaxial with the cylinder,
  - there being an inlet port opening into the chamber and via which fluid under pressure can be supplied to the chamber;
- a valve seat member having
  - a generally tubular portion slidably engaged in the guide bore of the body means and having at one end a transverse annular valve seat facing outwardly away from the chamber, and
  - a transverse portion spaced inwardly from the valve seat and extending across the interior of the tubular portion of the valve seat member, the transverse portion having a central axial through bore and flow passage means via which fluid can flow from the internal chamber and through the valve seat member to discharge via the valve seat;
- a movable valve member comprising
  - a head having a valve surface of such dimensions and

configuration as to be capable of engaging the valve seat to prevent flow of fluid through the valve seat member, and

an elongated spindle secured at one end to the head and projecting away from the valve surface, the spindle and valve surface being coaxial,

the movable valve member being arranged with the spindle extending through the axial through bore of the transverse portion of the valve seat member and through the internal chamber, the head being located with its valve surface outwardly of and facing toward the valve seat;

a piston operatively disposed in the cylinder and secured to the other end of the spindle of the movable valve member;

spring means engaged between the piston and body means and biasing the piston into engagement with the stop shoulder;

stop means comprising coacting parts carried by the valve seat member and the body means and disposed to limit outward movement of the valve seat member relative to the body means; and

biasing means yieldably biasing the valve seat member outwardly to cause the stop means to be engaged,

the piston having a larger effective area exposed to pressure in the internal chamber than does the valve seat member when the valve is closed.

4,300,751
FOLDABLE AND HEIGHT ADJUSTABLE OVERHEAD LIFT
Bennie F. Delaney, Route 3, Box 129, Rusk, Tex. 75785
Filed Sep. 5, 1980, Ser. No. 184,334
Int. Cl.^{3} B60P *1/00*
U.S. Cl. 254—2 R **6 Claims**

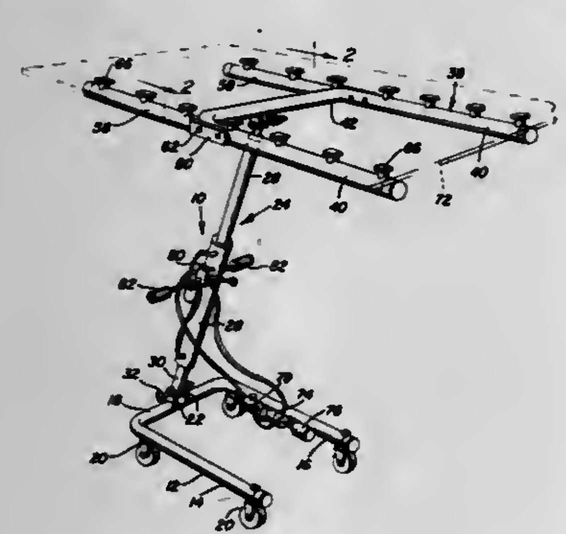

1. A foldable and height adjustable overhead lift including a horizontal lower elongated base frame, an upright longitudinally extendible boom, first pivot means supporting a first lower end of said boom from one end of said frame centrally intermediate the opposite sides thereof for selective angular adjustment of said boom relative to said frame about a first horizontal transverse axis extending transversely of said frame and boom between an upright position and a lower horizontal position closely overlying said frame and with the second of said boom projecting toward the second end of said frame, a second horizontal upper frame, second pivot means supporting said upper frame from the second end of said boom for selective angular displacement of said second frame relative to said boom about a second horizontal axis generally paralleling said first axis between a first position with said second frame disposed at generally right angles relative to said boom and a second position with said second frame generally paralleling said boom, said second frame including generally horizontally aligned, upwardly facing and horizontally spaced apart support portions supported therefrom, said first and second pivot means enabling said boom to be positioned in various inclined positions while said base and upper frames are maintained substantially horizontal, said first and second ends of said boom including mounting flange portions provided with parallel horizontal splined bores, said upper and lower frames including pairs of spaced mounting flanges having aligned horizontal splined bores formed therethrough and between which said boom flanges are received with the boom flange bores registered with the corresponding frame flange bores, and a pair of spring biased pivot fasteners each including a first splined end extending through the corresponding splined bores and a second smooth end axially shiftable into at least one of the corresponding frame flange bores and the corresponding cylinder flange bore.

4,300,752
HOG LOT GATE
Daryl A. Schultz, R. R. 2, Box 92-A, Rensselaer, Ind. 47979
Filed Feb. 13, 1980, Ser. No. 121,201
Int. Cl.^{3} E04H *17/16*
U.S. Cl. 256—73 **7 Claims**

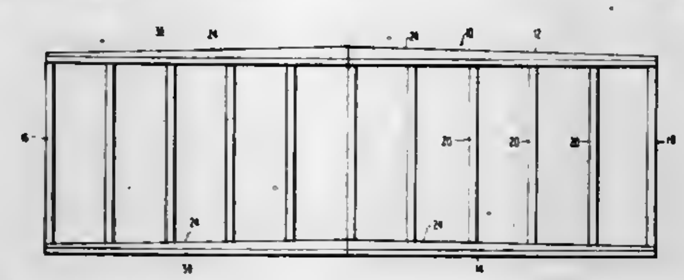

1. A hog lot gate comprising

a top rail and a bottom rail, said rails being in substantially parallel spaced apart relation and having left and right halves extending from a central portion of said rails to the ends of said rails,

an end post at each end of said rails substantially perpendicular thereto, spanning the distance between said rails, and vertical slats substantially parallel to said end posts and spaced therebetween,

wherein said rail halves are tapered from a wide extremity at said central portion to a narrow extremity at said rail end, both in height and width, and include a pair of sloping crown faces and a pair of depending side walls.

4,300,753
HOT METAL RUNNER SYSTEM WITH AIR POLLUTION CONTROLS
Micheal D. La Bate, 115 Hazen Ave., Ellwood City, Pa. 16117
Continuation-in-part of Ser. No. 123,369, Feb. 21, 1980, Pat. No. 4,262,885. This application Mar. 24, 1980, Ser. No. 133,356
Int. Cl.^{3} F27D *3/14*
U.S. Cl. 266—196 **5 Claims**

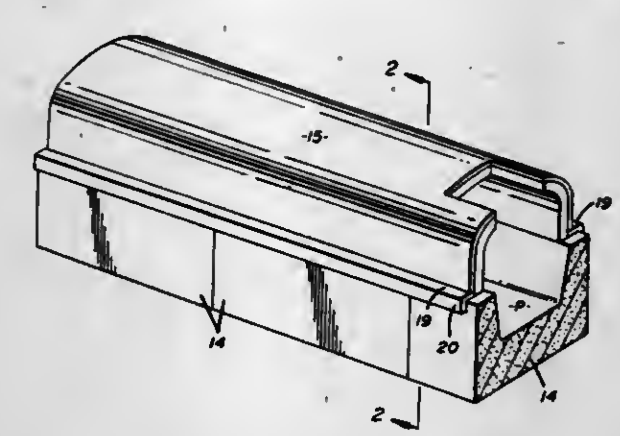

1. An improvement in a closed ferrous metal runner system for a hot metal pouring floor, said system extending from a source of molten metal to a pouring point thereof, the improvement comprising means for preventing air pollution of the pouring floor environment, said runner system comprising the combination of a plurality of elongated trough-like body members arranged in end to end relation, each of the body members having an integral base with spaced parallel upstanding side sections, said air pollution preventing means including a plurality of covers positioned in end to end relation on said plurality of trough-like body members connecting said source of molten metal and said pouring point, and means for securing said covers to said body members in an airtight manner to prevent fluid communication between said covered troughs and the environment surrounding said covered troughs, said body members and covers formed of material having a known life when subjected to molten ferrous metal flowing through said trough-like body members, said air pollution preventing means further including pollutant removal means connected to at least one of said covers.

4,300,754
WELDING CLAMP
Bernerd N. Lawrence, Box 174D, R. R. 1, Fieldon, Ill.
Filed Sep. 4, 1980, Ser. No. 184,133
Int. Cl.^{3} B25B *11/00*
U.S. Cl. 269—8 **7 Claims**

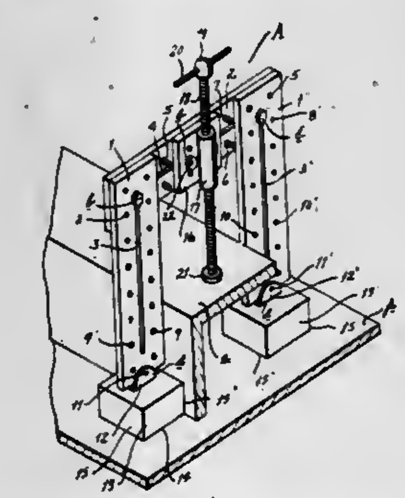

1. A work-engaging clamp comprising a pair of discrete, independently constructed, vertically presented posts, a transverse member for disposition axially normal to said posts, first and second cooperative means for detachably interconnecting said transverse member and said posts for relative adjusted positioning of said transverse member with respect to said posts, said first cooperative means comprising an elongated slot-like aperture extending longitudinally of each post and of said transverse member, and fasteners extensible through each post aperture and the aligned coordinating portion of the said aperture of the transverse member, said second cooperative means comprising pin elements fixed in said transverse member and projecting outwardly from one face thereof in axially normal relationship to the plane of said transverse member, and openings contoured and dimensioned for complementarily receiving said pin elements provided in horizontal and vertical arrangement in each post whereby through said first and second cooperative means said transverse member may be securely engaged to said posts for presentation at a preselected position vertically thereof as well as said posts being disposed in predetermined spaced-apart horizontal relationship lengthwise of said transverse member, a mounting plate, means detachably engaging said mounting plate on said transverse member for preselected disposition thereon between said posts, an elongated hold-down member carried on said plate in axially parallel relationship to said posts, there being a work-contacting element carried at the lower end of said hold-down member, and a work-engaging foot affixed to the lower end of each post.

4,300,755
MITER BOX CONSTRUCTION WITH CLAMP MEANS
Alfred M. Potvin, 5775 Boul. Marie-Victorin, Brossard, Quebec, Canada
Filed Nov. 5, 1979, Ser. No. 91,331
Int. Cl.^{3} B25B *1/00*
U.S. Cl. 269—87.2 **3 Claims**

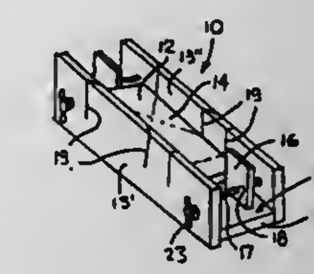

1. A mitre box comprising a rectangular bottom wall having a flat top surface, opposed vertical side walls extending from opposite longitudinal end edges of said bottom wall, and clamping means independently displaceable between said vertical side walls to apply clamping pressure on a workpiece lying on said top surface against either one of said side walls, said clamping means having a flat clamp plate having opposed clamping surfaces and extending transversely above said top surface with said clamping surfaces parallel to said side walls, a threaded bolt extending across said opposed vertical side walls and axially rotatable relative thereto, said bolt being in threaded engagement with a threaded bore in said clamp plate and being disposed below said flat top surface, and a flat plank secured on said flat top surface intermediate the ends of said rectangular bottom wall, there being a clamp plate adjacent each end edge of said plank and extending above a flat top surface thereof, said threaded bolt of each clamp plate extending above said rectangular bottom wall top surface and below said plank top surface.

4,300,756
IN-FEED PAPER BUCKLE CONTROL APPARATUS
Nicholas Danchak, Jr., Lewisville; Allan L. Saxinger, Denton; Roger M. Gray, and Barry C. Kockler, both of Lewisville, all of Tex., assignors to Xerox Corporation, Stamford, Conn.
Filed Mar. 7, 1980, Ser. No. 128,215
Int. Cl.^{3} B65H *7/02*
U.S. Cl. 271—8 R **5 Claims**

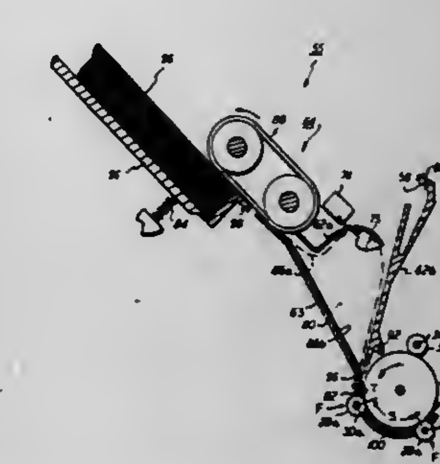

1. A cut-sheet feeding apparatus for use with an independently operable printing machine having a platen and first and second pressure feed roller means positioned in rolling contact with the periphery of said platen and separated from each other by a predetermined distance around the periphery of said platen, said cut-sheet feeding apparatus comprising:

sheet-supply means for storing a plurality of sheet members,

sheet-feeding means operatively positioned for feeding sheet

members in singular sequence from said sheet-supply means toward said platen,

sheet guide means operatively positioned to guide a leading edge of each sheet member, as it exits said sheet-feeding means, to a nip formed by the platen and the first pressure feed roller means, said sheet-guide means including buckle-guide means for forming a buckle of predetermined length and shape into each sheet member after each sheet member has registered into said nip, said predetermined length of buckle being greater than the distance measured on the periphery of the platen between the first and second pressure feed roller means,

sensing means operatively positioned with respect to the buckle-guide means to sense the presence of the buckle and operatively connected to the sheet-feeding means to stop operation thereof at a predetermined time.

4,300,757

APPARATUS FOR RECEIVING RECORDING SHEETS IN UPSET STATE FOR COPYING MACHINE

Junichi Koiso, and Hiroko Ito, both of Hachioji, Japan, assignors to Konishiroku Photo Industry Co., Ltd., Tokyo, Japan

Filed Oct. 26, 1979, Ser. No. 88,359

Claims priority, application Japan, Oct. 31, 1978, 53/149661[U]

Int. Cl.³ B65H ***31/00***

U.S. Cl. 271—207 **8 Claims**

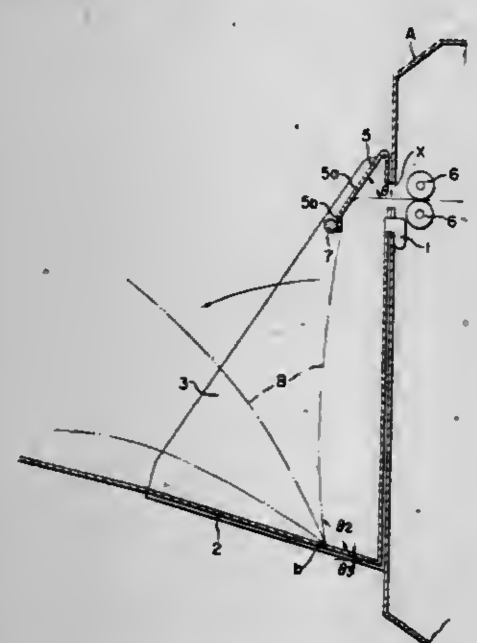

1. A sheet receiving apparatus for collecting in facially reversed orientation copy sheets discharged from a discharge port of a copying machine, said apparatus comprising:

sheet receiving means spaced below the machine discharge port for collecting the discharged copy sheets in facially reversed orientation; and

guide means proximate the discharge port for downwardly deflecting discharged copy sheets toward said sheet receiving means, said guide means comprising a unitary structure formed of a substantially planar guide portion inclined at a predetermined angle with respect to the direction of discharge of copy sheets from the machine and into which the copy sheets are deflectingly driven on discharge from the copying machine, and a deflecting portion unitarily extending from said guide portion at a predetermined angle with respect thereto so that the copy sheets deflected by said guide portion are thereafter further deflected by said deflecting portion to direct the copy sheets toward said sheet receiving means.

4,300,758

REVERSER MECHANISM FOR DUPLEX PRINTING/PAPER HANDLING APPARATUS FOR CUT SHEET PRINTING

Emmett B. Peter, III, Leesburg, Fla., assignor to Burroughs Corporation, Hollywood, Fla.

Filed Jan. 26, 1980, Ser. No. 163,395

Int. Cl.³ B65H ***5/00***

U.S. Cl. 271—225 **10 Claims**

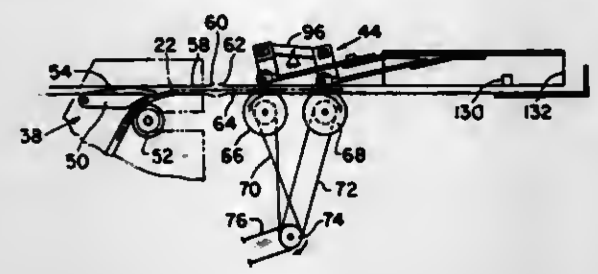

1. Apparatus for reversing the direction of movement of cut sheet items continuously moved from an input stack to an output receptacle without interruption or double feed comprising:

oppositely disposed continuously moving contrarotating means arranged in the path of movement of individual cut sheet items,

means producing a normal force on one of said contrarotating means for moving an item into said reversing apparatus,

means producing a normal force on the other of said contrarotating means for moving said item in reverse direction exiting said item from said reversing means,

signal controlled means coupling both said normal force producing means for reversing item direction in response to an applied signal, and

one-way means in the entering path of movement of said item effective to prevent backward movement of said item into the entering pathway.

4,300,759

INFLATABLE AQUATIC EXERCISER

David M. Caplan, Los Alamitos, Calif., assignor to AMF Incorporated, White Plains, N.Y.

Filed Mar. 31, 1980, Ser. No. 136,149

Int. Cl.³ A63B ***31/00***

U.S. Cl. 272—116 **3 Claims**

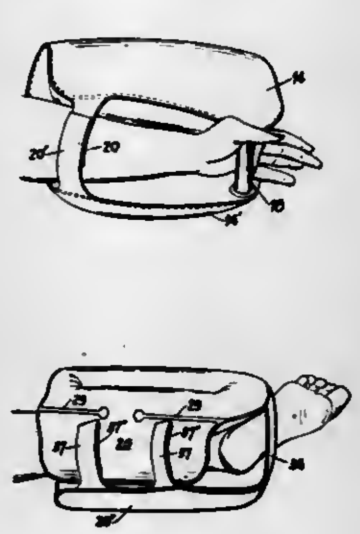

1. An inflatable limb encircling aquatic exerciser jacket for exercising a limb in water, said aquatic jacket comprising two sheets of flexible plastic sheet material which are sealed together along their outer edges into a closed compartment, seams formed between said two sheets to subdivide said compartment into a manifold and a plurality of parallel channels

which are in communication with each other and said manifold, a valved opening in one of said sheets for inflating said manifold and channels with air, said aquatic jacket when positioned on a human limb having said seams extending lengthwise thereof, fastening means on opposite sides of said aquatic jacket for retaining the same on said limb in a loose surrounding relationship, said aquatic jacket when on said limb surrounding the outer extremity thereof and progressing therefrom up said limb past the first joint thereof to just below the second joint thereof, and a narrow cross member at the lower end of said aquatic jacket, said cross member being spaced at its front edge and rear edge from the material of said jacket to permit engagement of said cross member by a hand for gripping thereof or by the central area of the underside of the wearer's foot.

4,300,760

EXERCISE DEVICE

Harry Bobroff, c/o The Perfection Manufacturing Company, 4236 Clayton Ave., St. Louis, Mo. 63110

Filed Jan. 12, 1977, Ser. No. 758,566

Int. Cl.³ A63B ***21/00***

U.S. Cl. 272—120 **1 Claim**

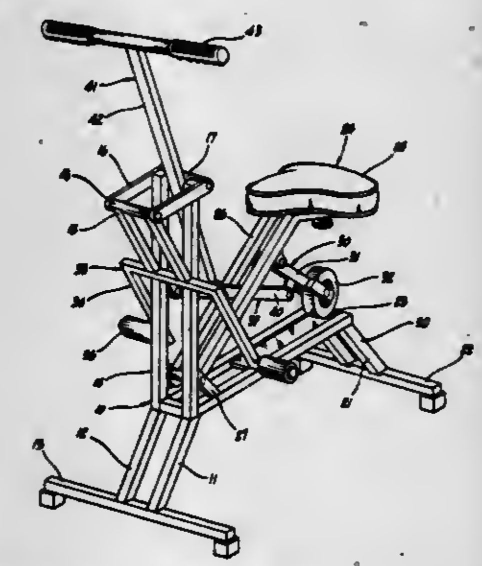

1. An exercise device, comprising:

(a) a frame means including a floor-engaging front portion, and an upper front portion having a bearing bar,

(b) a seat means including:

(1) a seat rearwardly of the upper frame portion, and

(2) a seat frame extending forwardly of the seat and pivotally connected to the frame means,

(c) a seat-support means including:

(1) an arm pivotally mounted to the seat frame, and extending downwardly and rearwardly, and

(2) a follower on the arm pivotally engaging a subjacent surface,

(d) a leg-actuated means pivotally connected to the upper front frame portion, and extending downwardly, the leg-actuated means including a pair of foot-engaging members,

(e) linkage means pivotally connected to the leg-actuated means and pivotally connected to the seat-support arm, and

(f) arm-actuated means including a handle bar pivotally connected to the linkage means between the pivotal connections of the linkage means with the leg-actuated means and the seat-support arm, and both pivotally and slidably engaging the bearing bar of the upper front frame portion for moving the handle bar upwardly and downwardly relative to the bearing bar to accommodate the movement of the linkage means,

(g) the arm-actuated means and the leg-actuated means being pulled and pushed respectively by the arms and legs of a user sitting on the seat to pivot the seat-support arm and move the follower forwardly on the subjacent surface, and thereby raise the seat means against the weight of the user, the user's weight tending to move the seat-support follower rearwardly on the subjacent surface and thereby lower the seat means.

4,300,761

SPRING TYPE EXERCISING DEVICE

William E. Howard, 289 N. Quaker La., West Hartford, Conn. 06119

Filed Oct. 6, 1980, Ser. No. 194,079

Int. Cl.³ A63B ***21/00***

U.S. Cl. 272—134 **6 Claims**

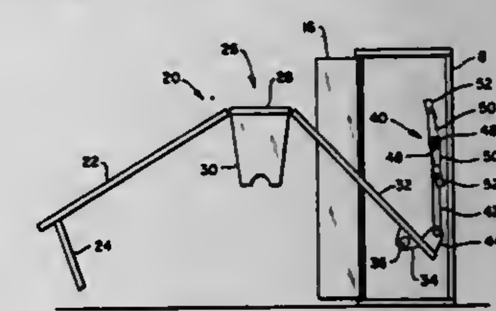

1. An exercising equipment unit comprising a generally rectangular cabinet having a front opening, an articulated body support platform comprising a first section attached at one end by a pivotal connection to the interior of the cabinet at the bottom portion thereof, a center bench section hingedly attached at one edge to the other end of the first section and having floor engaging supports, and an outer section hingedly connected at one end to the other edge of the center bench section and having a depending supporting member at its free end, the lengths of the first and the outer sections being dimensioned so that the platform may be folded within the cabinet with the first and the outer sections extending upwardly and disposing the top of the center bench section closely adjacent to the top of the cabinet and the length of the center bench section between the said side edges thereof being dimensioned to dispose the hingedly connected ends of the first and the outer sections closely adjacent to the back and front of the cabinet, respectively, the height of the pivotal connection of the first section and of the center bench section and the length of the supporting member of the outer section being dimensioned so that the platform, when extended outwardly from the cabinet, is supported in a raised horizontal flat position, the platform being of less width than the cabinet with its side edges sufficiently spaced from the side edges of the cabinet to permit the installation of exercising devices therebetween.

4,300,762
SURPRISE ACTION GAME
Adolph E. Goldfarb, 4614 Monarca Dr., Tarzana, Calif. 91356, and Howard L. Dekan, Oxnard, Calif., assignors to Adolph E. Goldfarb, Tarzana, Calif.
Filed Feb. 14, 1980, Ser. No. 121,644
Int. Cl.³ A63F *9/00*
U.S. Cl. 273—1 GC 35 Claims

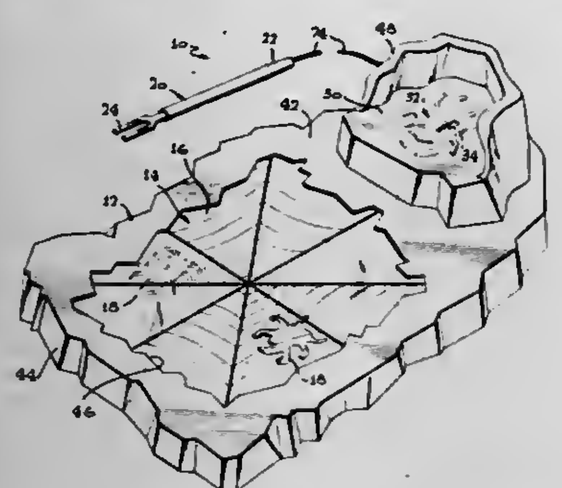

1. A surprise action game apparatus comprising;
(a) a play surface having electrically conductive contact means thereon;
(b) one or more play objects disposed upon the play surface, said object having electrically non-conductive means thereon;
(c) manually operable means for manipulating said play object, said manually operable means including an electrically conductive portion which comes into close proximity to said contact means incident to manipulation of the play object;
(d) an electrical motive means disposed adjacent to said play surface and electrically connected to said electrically conductive contact means and said electrically conductive portion so as to be energized when said two last-mentioned means contact one another;
(e) mechanical flipper means operatively connected to said motive means for being actuated when said motive means is energized; and
(f) a surprise object disposed adjacent said flipper means for being propelled onto said play surface by said flipper means when it is actuated by said motive means.

4,300,763
PSYCHOLOGICAL GAME DEVICE
Samuel J. Barr, 1855 Medical Dr., Titusville, Fla. 32780
Filed Feb. 21, 1980, Ser. No. 123,297
Int. Cl.³ A63F *9/00*
U.S. Cl. 273—1 E 4 Claims

1. A game device for two players comprising:
a housing having two opposed panels;
a pair of electric circuit completing push buttons disposed on each of said panels, one of said pair labeled to be related to a selected state of mind of a player and the other of said pair labeled to be related to the opposite state of such state of mind;
a logic circuit means connected to each of said push buttons for producing a control signal representative of the closure of one of said push buttons on each of said panels;
scoring indicator means connected to said logic circuit means responsive to said control signal for indicating the results of such closures;
counter means associated with said push buttons and said logic circuit means for providing a sequence of said control signal from said logic circuit means and in which said scoring indicator means is responsive to said sequence of control signals to indicate a plurality of results of a sequence of such closures;
timer means having a start button, said start button disposed in said housing; and

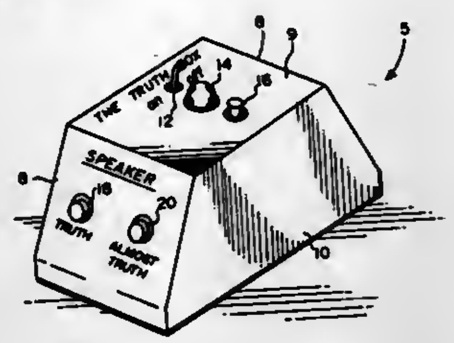

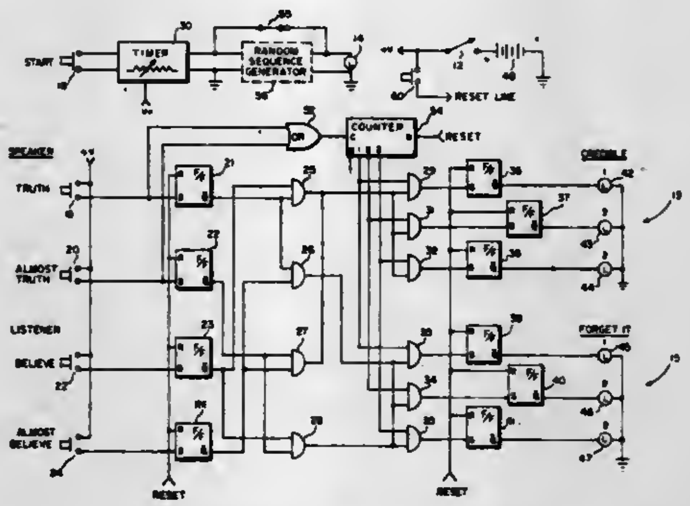

indicator means connected to said timer means and disposed in said housing so as to be visible to the players, said indicator means controlled by said timer means to be operated for a sequence of random length time periods.

4,300,764
BASKETBALL HOOP WITH SHIELD
William B. Burke, Springfield, Mass., assignor to William Burke Associates, Inc., Springfield, Mass.
Filed Dec. 27, 1979, Ser. No. 107,667
Int. Cl.³ A63B *63/08*
U.S. Cl. 273—1.5 R 6 Claims

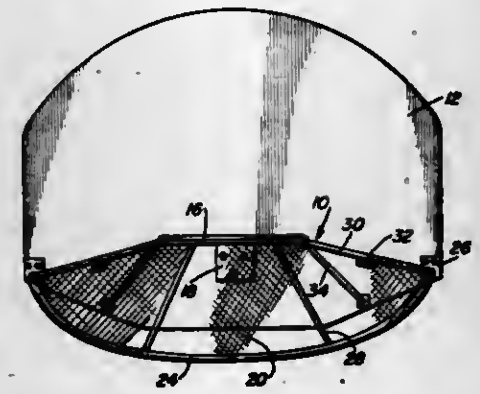

1. A basketball hoop and shield adapted to be used in combination with a backboard and comprising an annular hoop, bracket means adapted to support the hoop from the backboard in horizontal position to define a hole through which a basketball must pass in order to score points, and a downwardly and outwardly inclined shield having an inner periphery adjacent the hoop to require a player to release a ball aimed for the hoop prior to his hand or hands reaching the hoop and providing a rebound surface for engagement by balls missing the hoop, said shield being in the form of a periphery continuous panel having an inner edge adjacent the hoop, an outer rim attached to the outer edge of the panel and adapted to be supported from the backboard, the angle of the panel being greater at the front of the hoop and less at the sides of the hoop whereby rebound balls will have a high and short trajectory toward the sidelines of the basketball court and a shallow and long trajectory towards the center of the basketball court.

4,300,765
BATTING AID
Ronald L. Stringham, 158 Ashurst La., Mt. Holly, N.J. 08060
Filed Dec. 29, 1978, Ser. No. 974,242
Int. Cl.³ A63B *69/40*
U.S. Cl. 273—26 C 15 Claims

1. A batting aid comprising
a contoured self-supporting shoulder piece for positioning on a shoulder of a batter;
a contoured self-supporting jaw piece for positioning against the jaw of the batter; and
means connecting said shoulder piece and said jaw piece together in spaced adjustable relation to each other, said means being longitudinally resilient to permit pressing of said jaw piece towards said shoulder piece, said means including a stem on one of said pieces and an elastically compressible soft rubber sleeve on the other of said pieces having said stem slidably received therein.

4,300,766
HOCKEY-TYPE TABLE GAME APPARATUS
Joseph E. Haynes, 5945 Merle Dr., Toledo, Ohio 43623
Filed Nov. 28, 1979, Ser. No. 98,207
Int. Cl.³ A63F *7/06, 7/40*
U.S. Cl. 273—85 R 6 Claims

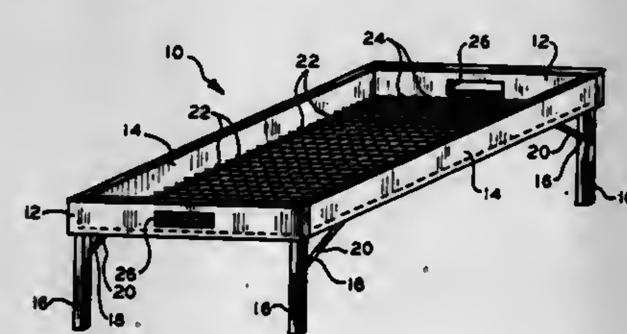

1. An apparatus for playing a game comprising: a frame having generally upstanding sides defining boundaries of a playing surface for containing a playing piece a plurality of reaches of string interwoven to define a plurality of spaced intersections, and attached to said upstanding sides and stretched taut in a generally horizontal plane to define said playing surface, a playing piece in sliding contact with said surface at said intersections, and having a generally cylindrical side wall connected to upper and lower opposed planar surfaces by a pair of chamferred surfaces, and a bat having a body for striking said playing piece and a handle attached to said body.

4,300,767
INFLATED GAME BALL HAVING LONG LASTING PRESSURE RETENTION WITH DECREASED NOISE
Thomas F. Reed, and Raymond K. Ritzert, both of Akron, Ohio, assignors to The General Tire & Rubber Company, Akron, Ohio
Continuation of Ser. No. 821,002, Aug. 1, 1977, abandoned. This application Jul. 25, 1979, Ser. No. 60,316
Int. Cl.³ A63B *41/00*
U.S. Cl. 273—61 R 5 Claims

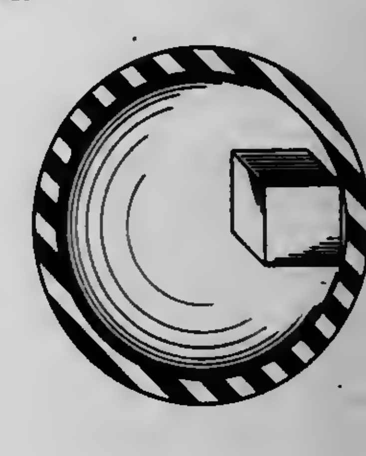

5. In a pressurized game ball including an elastomeric gas-permeable wall defining a hollow cavity containing a gas system under pressure having a molecular weight greater than 49, which ball generates a noise upon impact, the improvement which comprises the addition of a small but effective amount to reduce the noise generated by the presence of the gas system to an audible rating of 0, of a solid material and shaped to disrupt the spherical symmetry of the inside of the ball.

4,300,768
CHESS-LIKE BOARD GAMES
Allan Wechsler, 356 Somerville Ave., Somerville, Mass. 02143
Filed Oct. 31, 1980, Ser. No. 202,466
Int. Cl.³ A63F *3/02*
U.S. Cl. 273—260 3 Claims

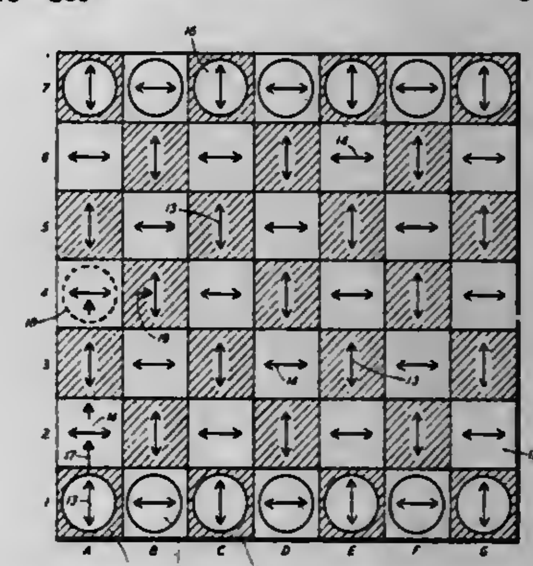

1. A chess-like board game for two players comprising:
a checkerboard with rows and columns of bilaterally colored dark and light squares,
said board having the same number of rows and columns in each direction,
the number of rows and columns being an odd number not less than five,
all of said dark colored squares bearing indicia pointing in the same direction aligned with rows or columns of the board,
all of said light colored squares bearing indicia pointing in the same direction aligned with rows or columns of the board in a direction normal to the indicia on said dark colored squares,

a set of checkers for each player, distinguishable visually in play,
each set of checkers consisting of the same number as the number of squares in a row and being initially placed on opposite sides of the board on the row closest to the respective players, and
the moves of the individual checkers being different on the dark and the light colored squares and directed by the indicia thereon.

4,300,769
KICKER APPARATUS FOR PINBALL MACHINE
Toshihiro J. Momura, Hollywood, Calif., assignor to Kabushiki Kaisha Universal, Oyama, Japan
Filed Jan. 10, 1980, Ser. No. 110,910
Int. Cl.^{3} A63F *7/00*
U.S. Cl. 273—129 V **5 Claims**

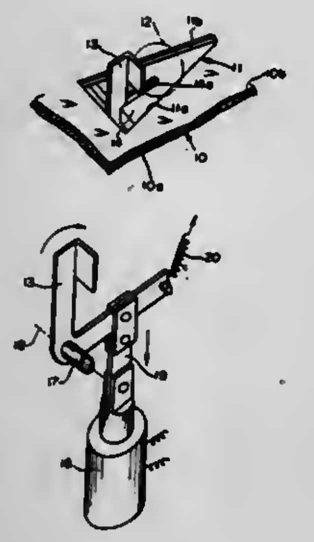

1. In kicker apparatus for pinball machines, comprising an inclined playing surface, a kicker for being contacted by a ball which rolls down said playing surface under the influence of gravity, a plate which is depressed by the weight of a ball approaching said kicker, and actuating means to actuate said kicker to impel the ball backward upon said plate being depressed; the improvement comprising an aperture in the playing surface, the aperture having opposite side edges on which the ball rolls in its movement toward and away from the kicker, said edges diverging from each other in the direction of movement of the ball toward the kicker and converging toward each other in the direction of movement of the ball away from the kicker, said plate being located in said aperture, and spring means interconnecting said kicker and plate to urge said kicker backward and said plate upward.

4,300,770
ELECTRONIC BOARD GAME
Robert C. Knetzger, Redondo Beach, Calif., assignor to Mattel, Inc., Hawthorne, Calif.
Filed Feb. 8, 1980, Ser. No. 119,713
Int. Cl.^{3} A63F *3/00*
U.S. Cl. 273—238 **9 Claims**

1. A game comprising in combination a game board having a track described on the board surface;
player pieces which are moved along the track;
detection means for automatically sensing an interval of the track along which a player has moved his player piece;
selection means for randomly designating intervals of the track, said selection means allowing the designated intervals to be changed during play of the game; and
sound generator means responsive to the selection means and the detection means to automatically create a first or a second sound as the player moves his player piece along the track, the first sound being different from the second sound, the first sound being produced only when a player piece is detected by the detection means on the designated intervals, and the second sound being produced only

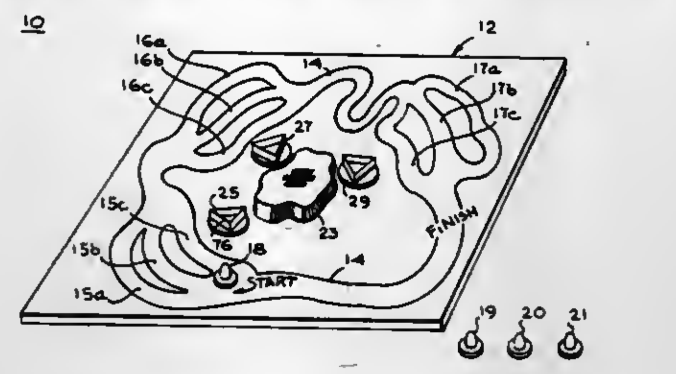

when a player piece is detected by the detection means on the non-designated intervals.

4,300,771
BALL AND STRING SKILL TOY
Richard F. Lori, 88 Hall St., Mansfield, Mass. 02048
Filed Sep. 10, 1979, Ser. No. 74,167
Int. Cl.^{3} A63B *67/22*
U.S. Cl. 273—329 **2 Claims**

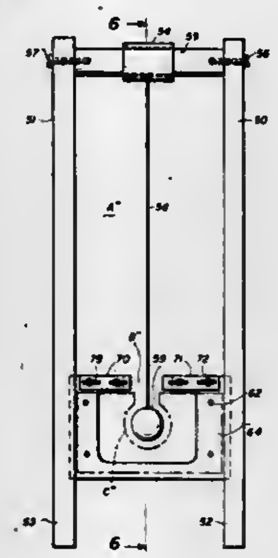

1. A toy apparatus comprising:
a structure having a pair of longitudinally coextensive vertical arms forming an elongated passage and having a portion forming a string support means at one end of said passage, said structure arranged with said elongated passage intermediate the vertical arms and the string support means, the lower portions of said arms being perpendicular to said string support means,
said string support means interconnecting said longitudinally coextensive vertical arms remote from said lower arm portions,
a sleeve coupling member rotably mounted around said string support means, a string attached at one end to the coupling member, and at the other end to a ball, the combined length of the string and ball from the edge of said coupling member being less than the length of said elongated passage,
a frame having an opening including an upper portion and a lower portion, said frame positioned between said vertical arms and connecting said vertical arms at a point along the arms such that the distance between said coupling member and the center of the lower portion of said opening of the frame is substantially equal to the length of the string,
a rigid plate having a hollow target aperture, the target aperture being of a diameter greater than the diameter of the ball, and said plate being fastened to said frame by fastening means, and
said elongated passage thereby comprised of an upper aperture defined by said string support means, said longitudinally extensive vertical arms and the upper portion of said frame opening, and an intermediate constriction defined by the upper portion of said frame aperture contiguous with and located below said upper aperture, and said target aperture contiguous with and located below the constriction aperture, said constriction aperture having a width less than the width of the upper aperture and formed by at least one constricting member attached substantially perpendicularly to each one of said longitudinally coextensive vertical arms and extending partially into the elongated passage, so that upon imparting a centrifugal force to the ball, the ball and string may rotate around the string support means and through said elongated passage with a portion of the string passing through the constriction aperture and with the ball passing through said target aperture.

4,300,772
SEALING ARRANGEMENT FOR ROTATABLY MOUNTED SHAFTS
Jürgen Nissel, Wesel, Fed. Rep. of Germany, assignor to Pintsch Bamag Antriebs-und Verkehrstechnik GmbH, Dinslaken, Fed. Rep. of Germany
Filed Sep. 21, 1979, Ser. No. 77,834
Claims priority, application Fed. Rep. of Germany, Sep. 30, 1978, 2842780
Int. Cl.^{3} F16J *15/40*
U.S. Cl. 277—3 **11 Claims**

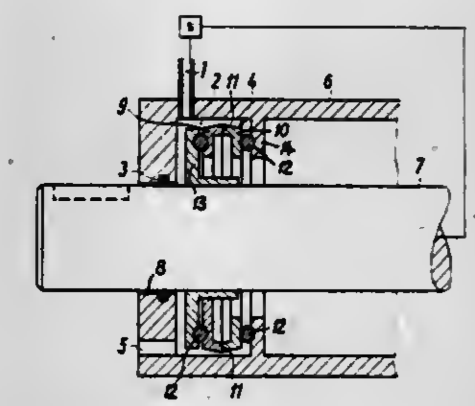

1. Sealing arrangement for a shaft rotatably mounted in a housing, and operable in abrasive media, comprising:
a main seal and an auxiliary seal fitting around the shaft and extending between respective surfaces associated with said shaft and said housing,
a chamber formed between the main and auxiliary seals by housing and shaft parts, said chamber being located at the side of the main seal closest to the auxiliary seal,
a feed opening for continuously communicating a pressurized environmentally harmless separating medium to said chamber,
an outlet opening in said chamber for the separating medium,
and pressure medium supply means for supplying said environmentally harmless separating medium to said feed opening under pressure,
said pressure medium supply means and the dimensions of the feed and outlet openings being correlated to one another to assure that a certain amount of the separating medium continuously escapes from the chamber through the auxiliary seal during operation of the shaft to prevent ingress of the surrounding abrasive media into the chamber,
and wherein said outlet opening is provided at the point in the chamber which is lowest in the operating position of the sealing arrangement whereby pollutants which are in the chamber can be flushed from the latter.

4,300,773
SEALING DEVICE
Jerry G. Jelinek, La Habra, Calif., assignor to Parker-Hannifin Corporation, Cleveland, Ohio
Continuation of Ser. No. 884,662, Mar. 8, 1978, abandoned. This application Sep. 8, 1980, Ser. No. 185,112
Int. Cl.^{3} F16J *15/06*
U.S. Cl. 277—11 **5 Claims**

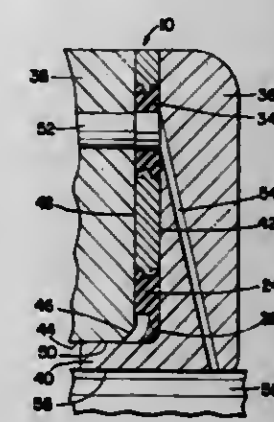

1. In combination a sealing device and a part having a generally cylindrical surface, said sealing device comprising a plate having an aperture therethrough, an elastomeric member bonded to said plate at the periphery of said aperture, said elastomeric member being generally planar and having an annular sealing portion with axially separated transverse sealing surfaces concentric with said aperture and having a flexible annular spacer portion and having an opening therethrough in which said cylindrical surface is received, said opening being initially of a smaller diameter than said cylindrical surface and increased in diameter by stretching said spacer portion over said cylindrical surface causing said spacer portion to be in tight contact with said cylindrical surface to position said transverse sealing surfaces concentrically with said cylindrical surface, said support plate having at least one further aperture therein radially outwardly of said first mentioned central aperture, said further aperture being angularly and radially spaced relative to said central aperture and being adapted for communication with a device angularly and radially positioned relative to said cylindrical surface, whereby positioning of said support plate provides an accurate radial registration of said further aperture with the radial position of said device, said support plate being rotatable about said cylindrical surface to achieve angular registration of said further aperture with said device.

4,300,774
REMOVABLE SEALING PLUG FOR SPACED APART WALL STRUCTURE
Nicholas E. Hollis, Springdale; Michael P. Swift, Milford, and Herbert Hallia, Cincinnati, all of Ohio, assignors to General Electric Company, Cincinnati, Ohio
Filed Apr. 28, 1980, Ser. No. 144,135
Int. Cl.^{3} F16J *15/06;* **B25G** *3/02*
U.S. Cl. 277—12 **12 Claims**

1. Apparatus for removably sealing at least a pair of opposing apertures in a structure of the type having at least two spaced apart walls wherein each of the walls includes at least one of the opposing apertures, which comprises:
(a) first shaft means for extending between the two spaced apart walls and having a pair of axially opposing ends, one of said ends including fastening and sealing means for removably fastening in a substantially sealed manner to the opposing aperture in one of the walls, the other of said ends including first mating means for mating with a second sealing means;
(b) rotationally torqueable second sealing means including fastening and sealing means for removably fastening in a substantially sealed manner to the opposing aperture in the

other wall and further including second mating means for mating with said first mating means; and
(c) compressible spring means coupling said first shaft means and said second sealing means for engaging said first and second mating means wherein:
(i) said first and second mating means are normally urged together by said spring means and wherein said first

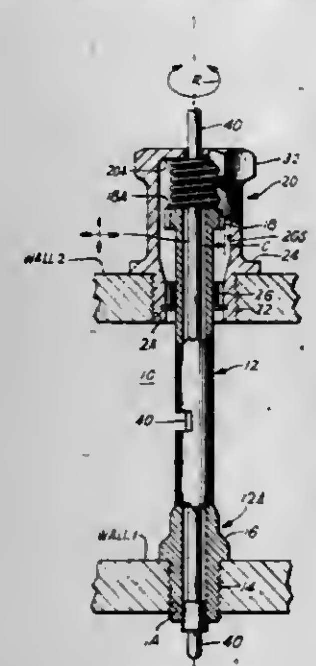

shaft means and second sealing means are rotationally engaged such that rotational torque applied to said second sealing means is transferred to said first sealing means; and
(ii) a predetermined compression of said spring means separates said first and second mating means such that said first shaft means and said second sealing means are rotationally disengaged.

4,300,775
LIQUID-FILLED RADIAL SEAL
Reginald K. Ringel, Decatur, Ill., assignor to Caterpillar Tractor Co., Peoria, Ill.
PCT No. PCT/US79/00594, § 371 Date Aug. 13, 1979, § 102(e) Date Aug. 13, 1979.
PCT Filed Aug. 13, 1979, Ser. No. 93,071
Int. Cl.³ F16J *15/46*
U.S. Cl. 277—34.3 **13 Claims**

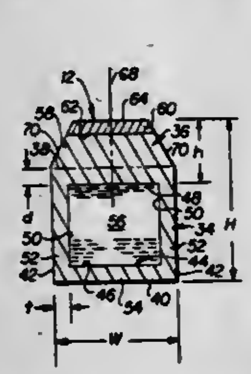

1. A liquid-filled radial seal (12) comprising:
an annular body portion (34) having a substantially cylindrical seating surface (40) and defining an internal chamber (44);
an incompressible liquid (56) substantially filling the chamber (44); and
an annular seal portion (36) having a substantially cylindrical sealing surface (64), the seal portion (36) being radially connected to the body portion (34) along a cylindrical reference boundary (38) and having a cross sectional configuration tapering divergingly and radially away from the sealing surface (64) toward the reference boundary (38), the free radial distance "h" between the chamber (44) and the sealing surface (64) being proportioned within a range of about 25 to 50% of the free radial overall height "H" of the seal (12) between the cylindrical surfaces (40,64).

4,300,776
SEALING ASSEMBLY FOR TWO RELATIVELY MOVABLE MACHINE PARTS
Peter Taubenmann, Munich, Fed. Rep. of Germany, assignor to Krauss-Maffei Aktiengesellschaft, Munich, Fed. Rep. of Germany
Filed Nov. 25, 1980, Ser. No. 210,288
Claims priority, application Fed. Rep. of Germany, Dec. 11, 1979, 2949723
Int. Cl.³ F16K *43/00;* **B67D** *5/46*
U.S. Cl. 277—124 **7 Claims**

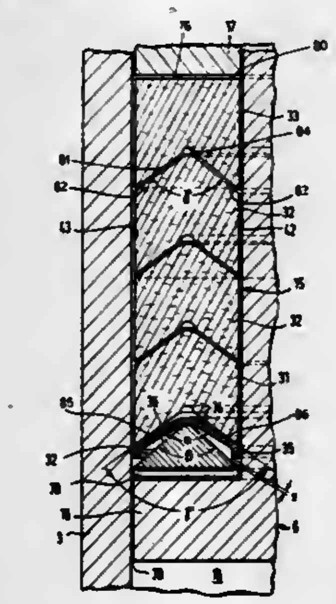

1. A packing assembly for sealing two relatively movable machine elements against one another as a first of said elements moves toward a fluid compartment under pressure in a forward direction and can be retracted in an opposite direction, said packing assembly comprising:
an abutment formed on one of said elements remote from said compartment;
a stack of packing members braced at one end against said abutment and having V-section portions turned toward said compartment and defined by flanks diverging at angle γ;
a spring element of V-shaped cross section engaging the flank of a member of said stack proximal to said compartment and having a flank angle α; and
a counter-surface supporting said spring element against said stack, said angle α being greater than the angle γ in a relaxed condition of said spring element and said counter-surface being shaped to permit deflection of flanks of said spring element to reduce the flank angle thereof to a value less than γ upon stressing of said stack.

4,300,777
FLUID SEAL
James D. Symons, Southfield, Mich., assignor to General Motors Corporation, Detroit, Mich.
Filed Jun. 16, 1980, Ser. No. 159,783
Int. Cl.³ F16J *15/32*
U.S. Cl. 277—153 **2 Claims**

1. An improvement in fluid seals for a rotating shaft, said seal having an elastomeric material molded seal portion with a substantially cylindrical surface disposed sealingly circumjacent the shaft to provide an atmospheric side and a liquid side for sealing against axial liquid flow along said shaft, said improvement comprising; a second elastomeric material molded seal portion having a cylindrical surface disposed axially adjacent and bonded with the other cylindrical surface on the liquid side and sealingly circumjacent the shaft, said second seal portion having an elastic modulus substantially lower than the other seal portion and, each cylindrical surface having at least two normally axially extending projections which deflect to a helical configuration in the direction of and during shaft

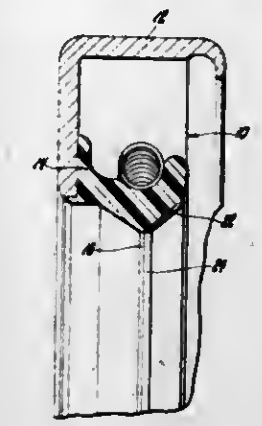

rotation, and said projections cooperating with the shaft to form a viscous shear pump with said projection on said second seal portion having greater helical configuration to increase the pumping action.

4,300,778
HIGH PRESSURE SHAFT SEAL
Roger O. Gagne, Gilford, N.H., assignor to International Packings Corporation, Bristol, N.H.
Filed Feb. 7, 1980, Ser. No. 119,631
Int. Cl.³ F16J *15/32*
U.S. Cl. 277—153 **7 Claims**

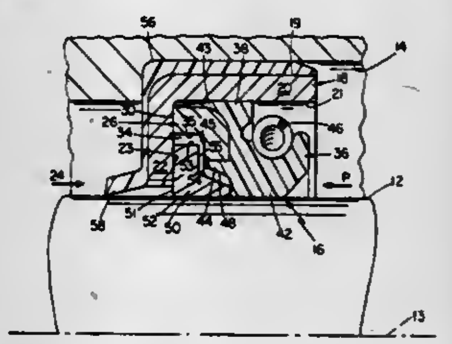

1. A high pressure shaft seal for use between a moving shaft and a surrounding stationary housing, said housing having an opening extending therethrough and receiving said shaft therein, comprising:
a rigid case adapted to be fixed relatively to said housing in a position encircling said shaft, said rigid case having a central axis generally coincident with that of said shaft and comprising an outer annular wall portion fitting within said housing and a front wall portion extending radially inwardly perpendicular to said central axis toward said shaft on the lower pressure side of said seal,
a rigid pressure member having a central axis generally coincident with that of said shaft and comprising an outer annular wall portion fitting within said housing with its front end abutting said front wall portion of said case and a rear wall portion extending radially inwardly perpendicular to said central axis toward said shaft and spaced from said front wall portion of said case to form therebetween an inwardly open annular groove having its bottom spaced radially outwardly from said shaft,
an elastomeric primary sealing member having a central axis generally coincident with that of said shaft and comprising an outer annular wall portion fitting within said outer annular wall portion of said rigid case with its front side abutting said rear wall portion of said pressure member and a radially inwardly directed sealing lip for engaging said shaft, and
an annular floating support element mounted within said groove for free radial movement therein, said support element having an inner surface for engaging said shaft and an outer surface spaced radially inwardly from the bottom of said annular groove,
whereby said floating support element is free to move radially within said groove with said shaft to accommodate any relative eccentricity between said shaft and said housing and so prevent extrusion of said primary sealing lip between said shaft and said support element.

4,300,779
WICKING-RESISTANT GASKET ASSEMBLY
Robert A. DeCore, Elk Grove Village, and Anthony J. Bucher, Chicago, both of Ill., assignors to Felt Products Mfg. Co., Skokie, Ill.
Filed Jun. 9, 1980, Ser. No. 157,425
Int. Cl.³ F16J *15/12*
U.S. Cl. 277—235 B **7 Claims**

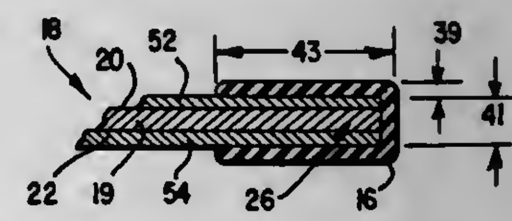

1. A wicking-resistant gasket assembly adapted to be positioned between an engine having an engine block and a closely confronting cylinder head, said engine defining at least one combustion chamber, said gasket assembly comprising:
a main body portion including a gasket base defining first and second expansive surfaces and an expansive composite porous facing layer on each of said surfaces, each of said base and said layers being relatively thin and having a peripheral edge portion defining the periphery of said main body portion, said main body portion defining at least one combustion opening and at least one fluid flow aperture;
and an elastomeric seal member encapsulating said periphery and said edge portions and extending inwardly therefrom a distance sufficient to provide an impervious barrier at the edges of said facing layers and at expansive surfaces of said facing layers adjacent said edges, thereby preventing the wicking of fluid through said composite facing layer beyond the edge portions of said facing layers when said gasket assembly is installed in said engine and fluid under pressure passes through said fluid flow aperture.

4,300,780
CENTERING AND SELF-ADJUSTING CHUCK
Robert F. Urbanic, Mentor, Ohio, assignor to PMC Industries, Inc., Wickliffe, Ohio
Filed Oct. 12, 1979, Ser. No. 84,185
Int. Cl.³ B23B *31/16, 31/30, 31/34*
U.S. Cl. 279—1 L **7 Claims**

1. A centering and self adjusting chuck selectively to clamp stock comprising:
an annular body having a central longitudinal axis therethrough;
first dependent jaw means including
first piston cylinder means axially oriented in said body,
first wedge block means in said body axially driven by said first piston cylinder means, and
dependent jaw members circumferentially spaced around and slidably radially mounted in said body, said dependent jaw members being cammed by said first wedge block means to be simultaneously radially inwardly driven equal distances by axial advancement of said first piston cylinder and wedge block means;
second independent jaw means including
second piston cylinder means axially oriented in said body in a direction opposite to said first piston cylinder means,

second wedge block means in said body axially driven by said second piston cylinder means, and
independent jaw members circumferentially spaced around and slidably radially mounted in said body to operate in substantially the same radial plane as said dependent jaws, said independent jaw members being cammed by said second wedge block means to be radially advanced equal or unequal distances by axial advancement of said second piston cylinder and wedge block means;
pressure means including
a first fluid passage system communicating with said first piston cylinder means through one end and side of said body,
a second fluid passage system communicating with said second piston cylinder means through the other end and side of said body, said second fluid passage system connecting the second piston cylinder means in parallel flow relationship to permit said independent jaws to be radially advanced equal or unequal distances;
jaw control means operative
initially to drive the dependent jaw members equally radially inwardly by supplying low pressure fluid to said first fluid passage system to actuate said first piston cylinder means, said dependent jaw members being

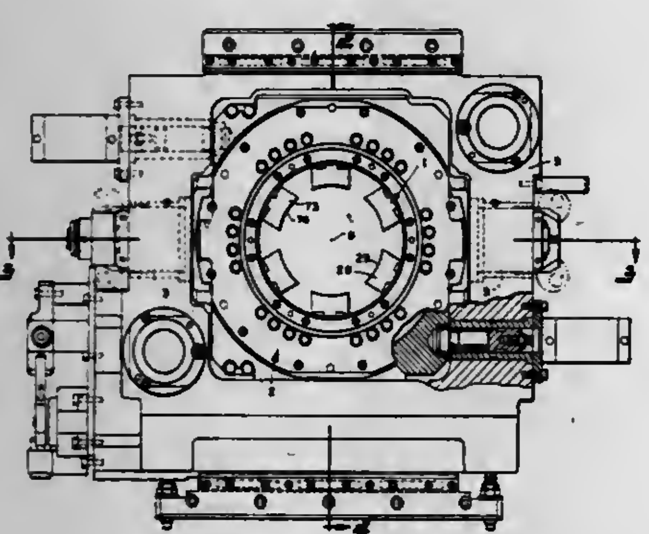

driven until all of the same contact the stock positioned therebetween to arrest their radial movement when the low pressure is overcome by said contacts, with the stock then being generally centered therebetween,
subsequently to drive the independent jaw members radially inwardly independent of one another by supplying low pressure fluid to said second fluid passage system to actuate said second piston cylinder means fluidically connected in parallel with respect to one another, said independent jaw members being radially inwardly driven until each such jaw member independently contacts the centered stock irrespective of travel magnitude, thereby to overcome the low pressure by such contacts and arrest further travel of that independent jaw in self adjusted yielding engagement with the stock and
finally operative simultaneously radially inwardly to drive the dependent and independent jaw members by supplying higher pressure fluid to both said first and second fluid passage systems to provide a positive clamp on the stock positioned therebetween, with substantially equal pressure being exerted by each such jaw member in contact with the stock to permit subsequent finishing operations; and
means to return the dependent and independent jaw means to radially retracted positions.

4,300,781
ROLLER SKATE BRAKING SYSTEM
Dennis D. Riggs, 415 Pile St., Ramona, Calif. 92065
Filed Jan. 28, 1980, Ser. No. 116,201
Int. Cl.³ A63C *17/14*
U.S. Cl. 280—11.2 **8 Claims**

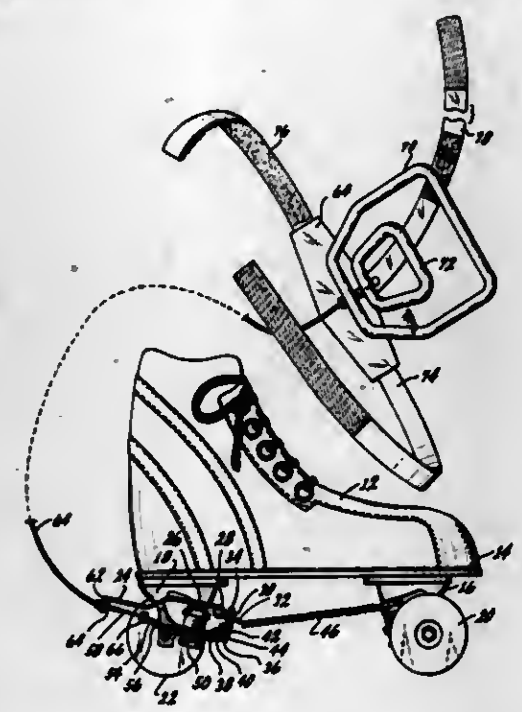

1. A roller skate braking assembly comprising:
a fixture adapted to be mounted on a roller skate adjacent to one wheel truck thereof;
a brake pad support means hingedly mounted by a hinge means on said fixture;
brake pads on said support means, said pads adapted to be moved into and out of contact with wheels on said truck;
spring means normally biasing said pads away from said wheels;
sleeve means having one end secured to said fixture;
cable means having a first end connected to said support means and extending into and through said sleeve;
actuating means for moving said cable from said support means into said sleeve to move said support means to bring said pads into friction contact with said wheels, said actuating means comprises a first outer ring means attached to said sleeve, and a second ring means attached to said cable and located within said first ring means whereby the ring portions may be manually squeezed together to pull said cable through said sleeve and bring said pads into engagement with said wheels; and
mounting means for releasably holding said actuating means to the upper outer thigh of a rider wearing said roller skate,
said mounting means comprises a panel secured to said first ring means adapted to hold sleeve and ring means in alignment substantially parallel to the rider's thigh, a first strap means attached to said panel and adapted to encircle the rider's thigh and hold said panel thereagainst, a second strap means attached to said panel and adapted to engage said rider's belt to prevent said panel from slipping downwardly along said rider's leg.

4,300,782
STRETCHER
Michael J. Pioth, 5900 Center St., Valley City, Ohio 44280
Filed Nov. 13, 1979, Ser. No. 93,921
Int. Cl.³ B62B *3/02;* **A61G** *1/02*
U.S. Cl. 280—47.11 **6 Claims**

1. In a stretcher for transporting hospital patients and the like from place to place, which stretcher has a patient-receiving bed portion and a chassis portion supporting said bed portion and means for raising and lowering said bed portion with respect to said chassis portion, said chassis portion having

a frame and and caster-wheel assemblies at each corner portion of said frame, all of said caster-wheel assemblies having a swivel frame in which the wheel is rotatably carried and being freely swivelable about a vertical axis when so desired, the improvement which comprises steering means for optionally and selectively turning the vertical plane of one wheel, said steering means being operable from the end of the stretcher opposite that carrying said wheel and including a telescopically extendable and retractable guide member having one end

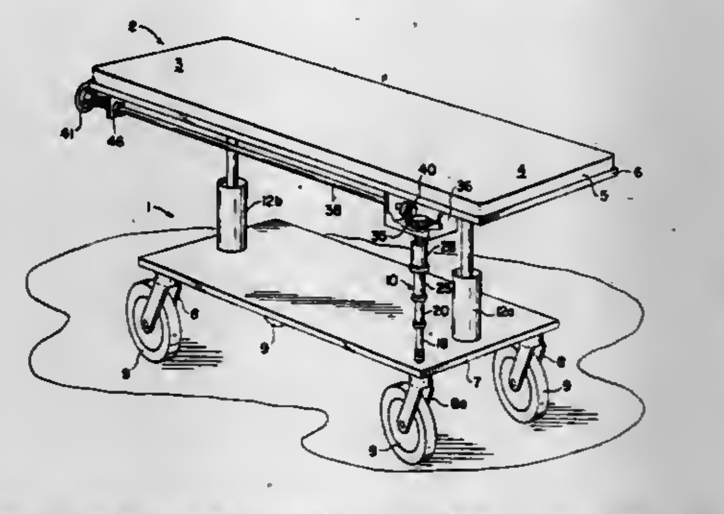

thereof suitably attached to a swivel frame of one wheel, said guide member having a plurality of rigid generally tubular sections of progressively larger cross-sectional dimensions, each of said sections save the largest being only longitudinally slidable into the next larger section, and means for preventing separation of said sections of said telescoping guide member when said guide member is extended to its maximum length, and means operable from a remote portion of the stretcher for turning the upper end of said guide member and through it the angular position of the plane of one wheel.

4,300,783
CONVERTIBLE LOAD CARRYING-RIDE-ON VEHICLE
Robert C. Fisher, East Aurora, NY, assignor to The Quaker Oats Company, Chicago, Ill.
Filed Jan. 22, 1980, Ser. No. 114,278
Int. Cl.³ B62D *15/00*
U.S. Cl. 280—87.02 R **4 Claims**

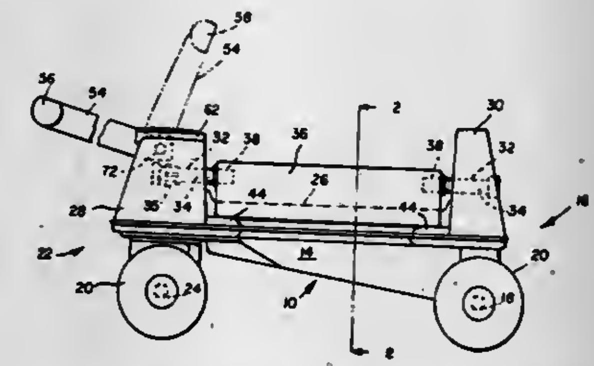

1. A toy convertible load carrying-ride on vehicle comprising in combination:
a transportable body having a center body portion and a pivotal front unit having a substantially vertically extending bore and a radially extending notch connected to said bore at the upper end of said bore;
side plates on said body movable between a box position, in which said plates cooperate with said body to form a box for converting the vehicle to a load carrying vehicle, and a seat position, in which said plates cooperate with said body to form a seat for converting the vehicle to a ride-on vehicle; and
an elongated handle member coupled to said bore and said notch of said front unit for movement between a steer position for steering a ride-on vehicle, and a pull position for pulling a load carrying vehicle, said handle member having a handle on one end portion thereof and a tongue on the opposite end portion thereof, said tongue having coupling means on its free end portion, whereby when said handle member is moved into its steer position, said free end portion of said tongue slidably enters said bore and cooperates therewith for constraining movement of said handle member to pivotal movememt about the coincident axes of said bore and said free end portion of said tongue, and when said handle member is moved into its pull position, said coupling means on said tongue is coupled to said upper end of said bore allowing pivotal movement of said tongue into said notch with said axis of said free end portion of said tongue transverse to said axis of said bore.

4,300,784
EFFICIENT, VERSATILE OSCILLATING PEDAL CYCLE
Boris Efros, Los Angeles, Calif., assignor to Energenic Propulsions, Ltd., Los Angeles, Calif.
Continuation-in-part of Ser. No. 879,220, Feb. 21, 1978. This application May 4, 1979, Ser. No. 36,150
The portion of the term of this patent subsequent to Jun. 9, 1998, has been disclaimed.
Int. Cl.³ B62M *1/04*
U.S. Cl. 280—255 **32 Claims**

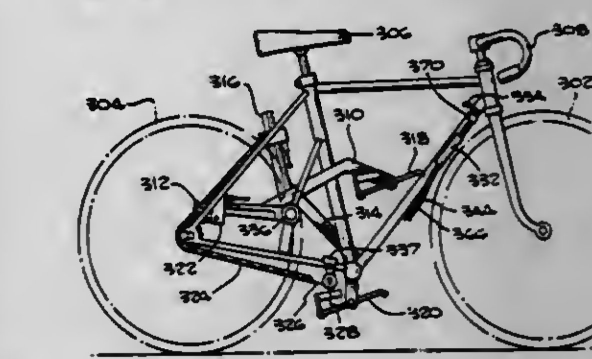

30. A versatile oscillating pedal type cycle comprising:
a cycle having a frame, front and rear wheels, and a seat;
means including a pair of pedal levers each having a predetermined range of movement for applying power to drive said cycle;
said cycle including means for mounting said pedal levers for operation wholly independent of one-another, whereby said pedals may be operated with different length strokes, or together, or alternatively, with equal length strokes, and with the pedal raising motion at a different speed than the power stroke;
pedal means secured to the front of said pedal levers for engagement by the feet for driving said bicycle; and
means for the high speed restoring of the front of said pedal levers to their upper positions, including means associated with each pedal means for engaging the foot or shoe of the rider, said restoring means having minimal opposing force less than 5 pounds, to the pedal lever during the power stroke.

4,300,785
ANTI-JACKKNIFING DEVICE
Bert J. Mettetal, Tecumseh, Mich., assignor to Truck Safety Systems, Inc., Tecumseh, Mich.
Filed Jul. 6, 1979, Ser. No. 55,243
Int. Cl.³ B62D *53/06*
U.S. Cl. 280—432 **5 Claims**

1. In an anti-jackknifing device for attaching a tractor vehicle to a trailer to be towed wherein a pair of transversely spaced support brackets are affixed to the rear of said vehicle and a fifth wheel coupling having a trailer kingpin receiving socket is pivotally mounted on said support brackets about a horizontal axis to receive the kingpin provided on the trailer, with the horizontal axis intersecting the vertical axis of the socket and kingpin, the improvement comprising an annular

disk brake concentric surface concentric with the vertical axis of said socket, the ends of said annular brake concentric surface being pivotally mounted on said support brackets for limited rotation about said horizontal axis, a hydraulically operated disk brake and disk brake housing carried by said annular disk brake and freely movable thereon when said tractor vehicle and trailer are attached and said disk brake not applied, said disk brake including a pair of brake pads located on opposite sides of said annular disk brake concentric surface, a disk brake housing receiving structure carried by said trailer for receiving said disk brake and said disk brake housing when said trailer kingpin is positioned in said trailer kingpin receiving socket of

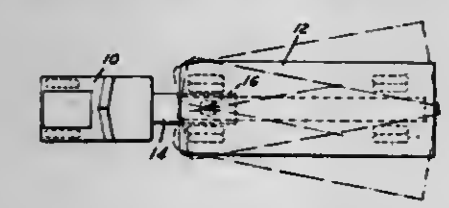

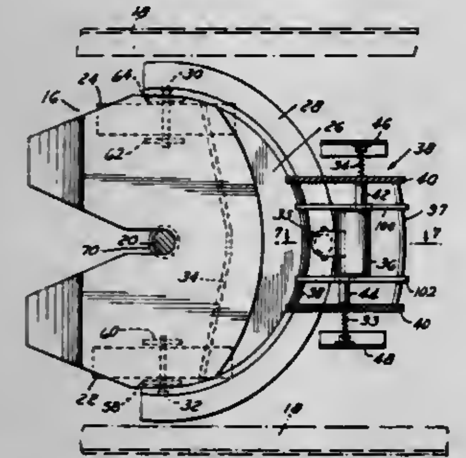

said vehicle, said tractor vehicle and said trailer with said disk brake not applied permitting relative rotation of said trailer about the vertical axis formed by said kingpin and said kingpin receiving socket, with said disk brake and said disk brake housing moving freely relative to said annular disk brake concentric surface, said brake pads upon application of the hydraulic disk brake gripping the annular disk brake concentric surface; and control means interposed between said disk brake, disk brake housing and said disk brake housing receiving structure for providing controlled articulation between said tractor vehicle and said trailer upon application of said hydraulic brakes and once said brake pads grip said annular disk brake concentric surface.

4,300,786
SNOW SKI WITH ADJUSTABLE CAMBER
F. William Alley, Stowe, Vt., assignor to Johnson Wax Associates, Racine, Wis.
Filed Dec. 19, 1979, Ser. No. 105,056
Int. Cl.³ A63C *5/07*
U.S. Cl. 280—602 6 Claims

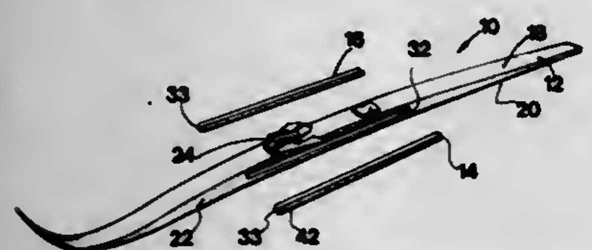

1. In a ski of the type having an elongate, substantially flat body with upper and lower surfaces, opposing side surfaces therebetween, and a foot-mounting mid-portion, the improvement comprising:

the body having a resiliently flattenable camber;

the opposing side surfaces defining insert-receiving voids extending along the body mid-portion; and

elongate, body-stiffening inserts removably secured within the voids and providing with the body a particular camber-flattening resistance, said voids and inserts being dimensioned such that each insert is flush with its corresponding ski body side surface and is held by frictional engagement.

4,300,787
LIFT AXLE SUSPENSION
Ervin K. Vandenberg, Massillon, Ohio, assignor to Turner Quick-Lift Corporation, Canton, Ohio
Filed Feb. 7, 1980, Ser. No. 119,250
Int. Cl.³ B60G *11/26*
U.S. Cl. 280—704 18 Claims

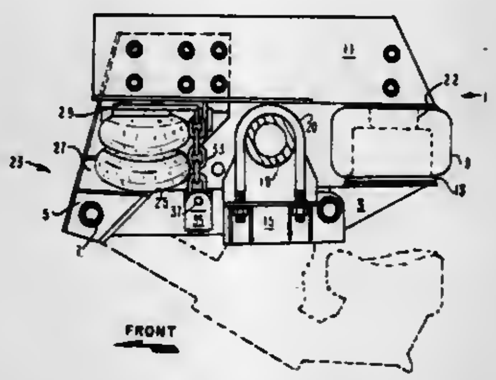

1. In a lift axle suspension for a wheeled vehicle having a longitudinally extending frame member on either side of the vehicle, the suspension comprising with respect to each of said frame members, a substantially rigid, longitudinally extending beam, a hanger bracket means for attaching the beam to a longitudinal frame member, means for attaching an end of said beam to said bracket which retains said beam in a position substantially parallel to said longitudinal frame member and allows said beam to rotate about its attached end in a plane substantially parallel to said longitudinal frame member, said hanger bracket means including a substantially vertically extending plate member, an axle-to-beam connecting member spaced from said hanger bracket along said beam, a first expandable and retractable air bellows means functionally positioned between said beam and a respective frame member at a spaced distance from said hanger bracket means, and means for raising the axle so as to lift the wheels of the vehicle above a road surface and for lowering the axle, to lower the wheels of the vehicle onto the road surface, the improvement comprising as said means for raising and lowering the axle, a pivotal connection attached to said vertically extending plate member in such a manner that the longitudinal axis of said pivotal connection is positioned substantially parallel to the longitudinal direction of said frame member, a second expandable and retractable air bellows located between a pair of plate means, one of said plate means being rigidly attached in said suspension and the other of said plate means being attached to said pivotal connection in such a manner that said plate lies in a plane which is parallel to and rotates about the longitudinal axis of said pivotal connection, a link member connected at one end to said pivotally attached plate means and at the other end to said beam such that upon expansion or retraction of said second air bellows and the opposite movement of said first air bellows, said pivotally connected plate means and link member move with respect to said rigidly attached plate means thereby causing said beam to pivot at its connection with said hanger bracket and raise or lower the axle with respect to the road surface.

4,300,788
PASSIVE RESTRAINT SYSTEM
Gustav Sperling, 812 S. Bedford St., Los Angeles, Calif. 90035
Filed Sep. 12, 1979, Ser. No. 75,040
Int. Cl.³ B60R *21/10*
U.S. Cl. 280—748 4 Claims

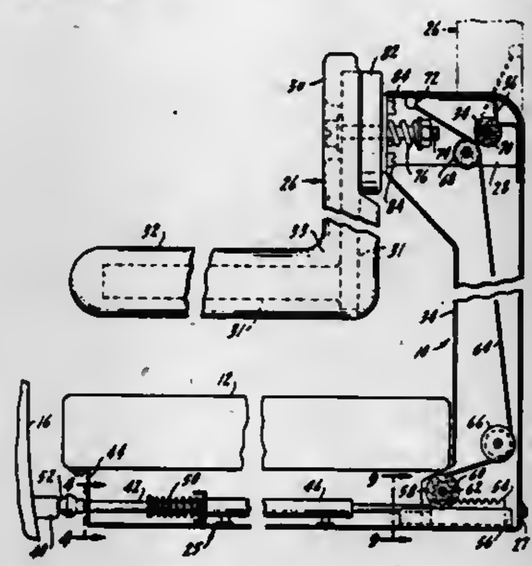

1. A passive restraint system for motor vehicles comprising:

a pedestal mounted to a seat frame, at the inside edge of a seat;

a restraining arm hinged to the top of the pedestal;

a spring attached to the pedestal urging the restraining arm to an open, vertical position; and

retractor means for swinging the restraining arm from its open, vertical position to a closed, horizontal position wherein the restraining arm extends across an occupant's lap, the retractor means including a cam attached to the vehicle door, a pushrod slidably mounted underneath the seat one end of the pushrod having a portion for engaging the cam, a rack connected to the other end of the pushrod, a takeup roller mounted for rotation on the pedestal, the take-up roller having a spur gear whose teeth engage those of the rack, and a cable connected at one end of the take-up roller and at the other end to the restraining arm, the sliding of the pushrod upon closing of the vehicle door causing the take-up roller to shorten the available cable length which in turn causes the restraining arm to swing to the closed position, while opening the door releases the retractor means, allowing the restraining arm to return under the urging of the spring to its open, vertical position.

4,300,789
EMERGENCY ESCAPE DEVICE FOR SEAT BELTS
Hideoki Matsuoka, Yokohama, and Yoshinobu Kondo, Kosai, both of Japan, assignors to Nissan Motor Co., Ltd., Yokohama and Fuji Kiko Co., Ltd., Tokyo, both of, Japan
Filed Jan. 24, 1980, Ser. No. 115,042
Claims priority, application Japan, Jan. 29, 1979, 54-9575
Int. Cl.³ B60R *21/02*
U.S. Cl. 280—801 3 Claims

1. An emergency escape device for a seat belt used with a car body, comprising:

a buckle including a latch mechanism fixed to said body;

a retractor housing having an upper and lower portion;

a tongue secured to said lower portion of the retractor housing and operative to be engaged with the disengaged from said buckle latch mechanism;

a fixed operating member secured on said upper portion of the retractor housing; and

a pair of release levers movably mounted on the housing, the lower portion of the release levers being operative to

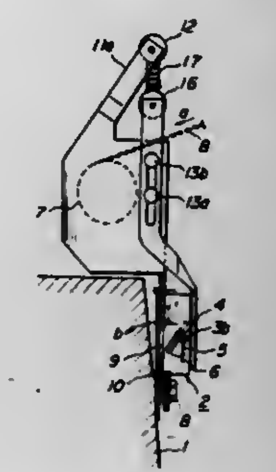

release the latch mechanism upon movement of the release levers relative to the operating member.

4,300,790
SET OF MULTIPLE INTERLEAVED FORMS WITH SEPARABLE HEADING INPUT FLAP
Daniel J. Griffin, 100 N. La Salle St., Chicago, Ill. 60602
Filed Oct. 24, 1979, Ser. No. 88,110
Int. Cl.³ B41L *1/20;* B42D *15/00;* G06K *19/00*
U.S. Cl. 282—9 R 5 Claims

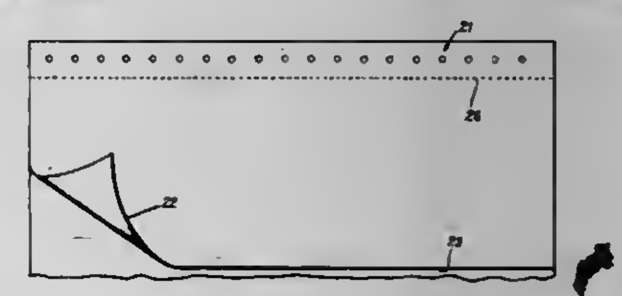

1. In a set of multiple interleaved forms, secured together at their top ends and having columnarly arranged data-receiving locations in horizontal lines numerically identified for use in a computer terminal, the improvement comprising a heading input flap having an upper edge portion secured to said forms, a free lower edge, transversely extending hinge means adjacent said upper edge portion, and input area designations on the under surface thereof, whereby lifting of said free edge and swinging the same upwardly about said hinge means will display said input area designations in precisely accurate relation to said data-receiving locations on said forms.

4,300,791
OPTICALLY SCANNABLE ANSWER SHEET BOOKLET WITH SEQUENCE BARS PRINTED THEREON AND METHOD OF PRODUCING SAME
James B. Bohrer, Owatonna, and Robert T. Collins, Chaska, both of Minn., assignors to National Computer Systems, Inc., Minneapolis, Minn.
Filed Mar. 27, 1980, Ser. No. 134,631
Int. Cl.³ B42F *21/00;* B65H *39/02*
U.S. Cl. 283—38 6 Claims

1. An optically scannable answer sheet booklet comprising a plurality of folded signatures, each signature having a sequence bar marginally printed adjacent one edge thereof which bar is displaced from those bars on other signatures to form a predetermined pattern of sequence bars when the correct number of

signatures is included and the signatures are properly oriented with respect to each other, said edges being free edges and

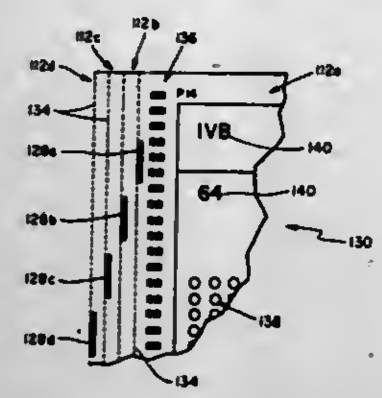

progressively inset from each other so as to expose to view at least a portion of each bar forming said predetermined pattern.

4,300,792
PIPE ASSEMBLY
Frank Donnelly, 18 Burton La., Rockaway, N.J. 07866
Filed Aug. 11, 1980, Ser. No. 176,767
Int. Cl.³ F16L *17/04*
U.S. Cl. 285—112 **8 Claims**

1. A pipe assembly comprising a plurality of confronting pipe sections fabricated from resilient plastic material each having a pair of diametrically opposed cord-like slots each formed in its outer surface with a planar land section and spaced a predetermined distance from its end; a support sleeve inserting within the end portions of each pipe section and having a circumferential groove formed therein in axial alignment with said slots; and a clamp assembly extending over the corresponding end portions of adjacent pipe sections, said clamp assembly including a cylindrical base portion, two shoulder portions extending radially inwardly from said base portion and spaced apart a distance corresponding to the distance between the respective slots of said adjacent pipe sections so that a portion of each shoulder extends in said planar land sections of a corresponding pair of said slots, and means capable of applying a radially inwardly directed force to said shoulder portions to deform said plastic material to conform with said groove such that while said clamping force is maintained said plastic material is forced into said groove and said pipe sections are clamped together.

4,300,793
HEAVY DUTY SECURITY LOCK
Alfred W. Benzel, Jr., 12409 Holsclaw Hill Rd., Brooks, Ky. 40109
Filed Apr. 14, 1980, Ser. No. 140,194
Int. Cl.³ E05C *3/04*
U.S. Cl. 292—205 **7 Claims**

1. A security lock for holding a movable closure to a fixed enclosure comprising:

a. base plate means having a perpendicular locking tongue fitted with a shortened collar that is adapted for mounting within a through hole in the closure;
b. adjustable locking means adapted for engaging the collar and fastening the base plate means to the said movable closure;
c. a transverse hole near the tip of the tongue;
d. and an eyebolt with a looped head adapted to be mounted in the said fixed enclosure with the looped head in close

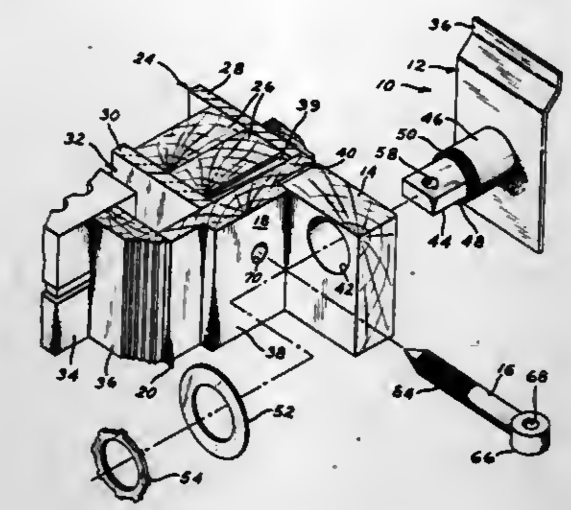

alignment with the transverse hole in the locking tongue for receiving a common locking means therethrough.

4,300,794
CLOSURE FASTENER
Forrest L. Dunsmoor, Atlanta, Ga., assignor to Peachtree Doors, Inc., Norcross, Ga.
Filed Dec. 11, 1979, Ser. No. 102,376
Int. Cl.³ E05C *5/02*
U.S. Cl. 292—247 **10 Claims**

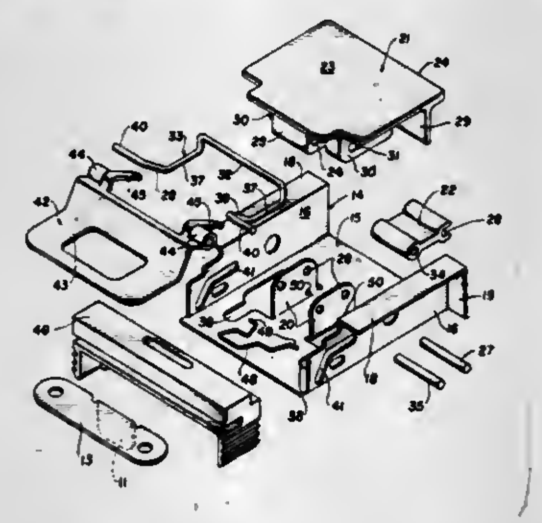

1. A closure fastener comprising a case adapted for flush mounting in a recess formed in a closure frame, said case being of channel formation including a bottom wall and side walls, anchor elements rising from said bottom wall and spaced from said side walls, said side walls having guide slots formed therein, a lock lever adapted to lie bodily within the case and being pivoted to said anchor elements and having cam slots, a latch toggle pivotally attached to said anchor elements in spaced relationship to the pivot axis of said lock lever, a toggle link having a pivotal connection with said latch toggle and being engaged with said cam slots of the lock lever, said toggle link having trunnions, said trunnions being slidably engaged with said side wall guide slots, a latch element pivotally coupled with said trunnions and adapted to be drawn by movement of the toggle link substantially inside of said case when the lock lever is pivoted to a locking position within the case and substantially parallel to said bottom wall of the case, said latch toggle assuming a past-dead-center condition relative to the pivot axis of the lock lever when the lock lever is in said locking position, and said latch element adapted for engagement with and disengagement from a keeper element on a closure with which the closure fastener is employed.

4,300,795
SLIDING GLASS WINDOW AND DOOR LOCK APPARATUS INCLUDING LOCK UNIT WITH DUAL SPRING BIASED ECCENTRICS
Robert N. Jennings, 4026 Olympic St., San Diego, Calif. 92115
Filed Sep. 10, 1979, Ser. No. 74,066
Int. Cl.³ E05C *17/54*
U.S. Cl. 292—257 **1 Claim**

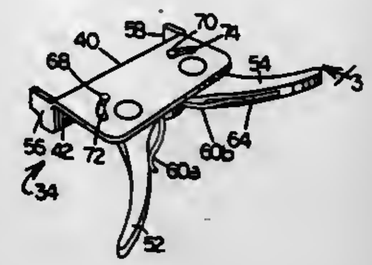

1. A removable lock unit for securely locking a sliding panel against horizontal sliding movement along upper and lower parallel tracks having at least one sidewall, comprising:

a planar base;
a planar support flange secured along one edge of the base orthogonal to the base;
a pair of planar rounded eccentrics each having an engagement surface along an edge thereof, each eccentric including a circular cam member having a serrated engagement surface and a pair of holes for tightly receiving a pair of connection flanges extending from a flat circular element;
a pair of curved operating levers each integrally formed with and extending from one of the circular elements;
means for pivotally mounting the eccentrics on the base in side by side relationship so that the levers curve away from each other and so that spreading the levers apart moves the engagement surfaces of the eccentrics into contact with the one side of the support flange;
spring means for biasing the engagement surfaces of the eccentrics toward the one side of the support flange, including a single tension spring having a pair of legs, each of the legs contacting and pushing against an inner edge of one of the levers to spread them apart so that the track sidewall can be squeezed between the support flange and the engagement surfaces of the eccentrics by the force of the spring;
means for limiting the pivotal movement of the levers so that the levers can each be swung toward each other through a predetermined equal distance to facilitate grasping of the levers between the thumb and index finger of a user and thereby ease installation of the unit on the track sidewall;
a slide stop connected to and extending substantially orthogonally from the other side of the support flange;
whereby the unit can be securely mounted with the track sidewall frictionally engaged between the engagement surfaces of the eccentrics and the support flange so that the slide stop extends into the operative area of the track to prevent sliding movement of the panel.

4,300,796
ADJUSTABLE DOOR AND WINDOW SECURITY PROP
John L. Lane, 117 Franklin St., Clarksville, Tenn. 37040
Filed Nov. 29, 1979, Ser. No. 98,476
Int. Cl.³ E05C *17/30*
U.S. Cl. 292—339 **6 Claims**

1. A door prop including first and second large and small diameter elongated relatively telescoped and rotatable tubular members, said large and small diameter tubular members including remote first ends, the first end of said large diameter tubular member including a resilient abutment surface engaging end piece supported therefrom, the first end of said inner tubular member including means defining an endwise outwardly opening notch for engaging a doorknob shank from below, said outer tubular member including first lateral opening means therein and said inner tubular member including longitudinally spaced second lateral opening means therein with which the first opening means is selectively registrable, a lock member insertable through the first opening means and the second opening means with which the first opening means is registered to thereby lock said large and small diameter tubular members against relative rotation and longitudinal shifting relative to each other, said large diameter tubular

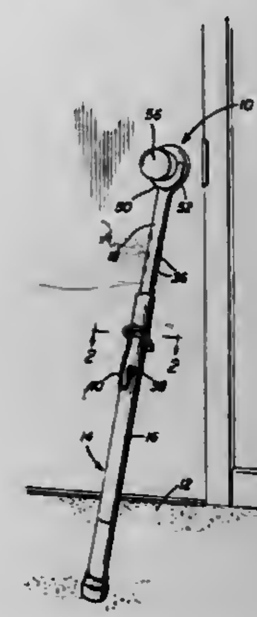

member including a tube partially telescoped and secured in the end thereof remote from the end from which said small diameter tubular member projects, an elongated tubular foot member removably telescopingly engaged over the exposed end of said tube and abutted against the adjacent end of said large diameter tubular member, the end of said tubular foot corresponding to the outer exposed end of said tube having said resilient end piece supported therefrom.

4,300,797
COMPACTLY FOLDABLE RECREATION ENCLOSURE
William N. Whitley, 19315 Shaker Blvd., and James M. Whitley, 2963 Morley, both of Shaker Heights, Ohio 44122
Continuation-in-part of Ser. No. 935,649, Aug. 21, 1978, Pat. No. 4,220,369, which is a continuation-in-part of Ser. No. 880,083, Feb. 22, 1978, Pat. No. 4,181,348. This application Dec. 31, 1979, Ser. No. 108,793
Int. Cl.³ B60P *3/32*
U.S. Cl. 296—164 **43 Claims**

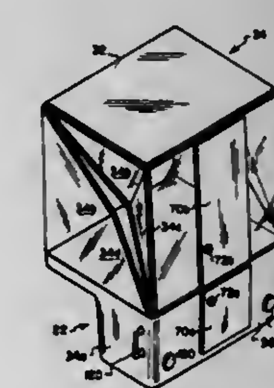

8. A recreation enclosure having first, second, top and side wall portions which are interconnected for folding movement between a substantially flat, thin, collapsed position and an extended operational position, comprising:

(a) rectangular first, second, and top wall portions which, when viewed from the side, define a quadrilateral;
(b) the side wall portions including a plurality of panels, the panels being hingedly connected to each other and to the first, second, and top wall portions; and,
(c) a releasable, diagonal connection between adjacent pan-

els, the connection extending from one corner of the quadrilateral to a diametrically opposite corner of the quadrilateral, the releasable connection, when released, permitting the panels to fold inwardly and the first, second, and top wall portions to be folded with respect to each other into a substantially flat, collapsed position.

4,300,798

FOLDABLE CHAIR WITH SUN SHADE AND TRAY

Donovon E. Musgrove, and Wilbur D. Vos, both of Sully, Iowa 50251

Filed Jan. 14, 1980, Ser. No. 111,588

Int. Cl.³ A47C *7/66*

U.S. Cl. 297—184 **3 Claims**

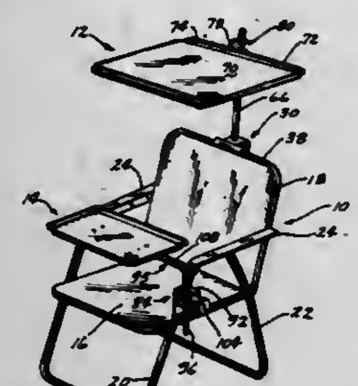

1. A sun shade for a chair or the like comprising: an upright support post, and a sun shade frame having horizontally disposed parallel rods extending towards said post from opposite sides of said frame, one of said rods terminating in a straight portion which extends through said post, the other of said rods terminating in a hinge comprising a loop element having a free end pivotally extending through said post and a portion which binds against said post below said free and when said frame is in a first operative forwardly horizontal position on one side of said post and said loop element portion passes over the top of said post to the opposite side thereof when said straight portion of said first rod is removed from said post and said frame is moved to a second vertical storage position.

4,300,799

VEHICLE OCCUPANT RESTRAINT SYSTEM

Douglas J. Cunningham, Lutterworth, England, assignor to B.S.G. International Limited, Birmingham, England

Filed Feb. 29, 1980, Ser. No. 125,907

Claims priority, application United Kingdom, Mar. 3, 1979, 07570/79

Int. Cl.³ B60R *21/00*

U.S. Cl. 297—487 **8 Claims**

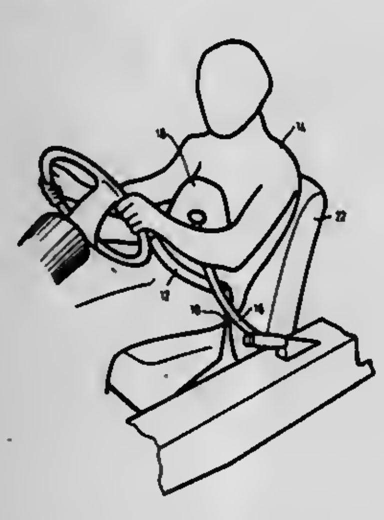

1. A system for restraining forward movement of an occupant of a motor vehicle seat comprising chest restraint means adapted to engage with the occupant's chest, lap restraining means adapted to engage with the occupant's lap and and coupling means interconnecting the chest restraint means and the lap restraint means so that, in use, forward movement of the lap restraint means causes backward movement of the chest restraint means, the coupling means including variable velocity ratio means arranged to cause a non-linear variation in the velocity ratio of the coupling means in response to forward movement of the lap restraint means to increase the extent of backward movement of the lap restraint means caused by a predetermined extent of forward movement of the chest restraint means.

4,300,800

METHOD OF RUBBLING A PILLAR

Thomas E. Ricketts, Grand Junction, Colo., assignor to Occidental Oil Shale, Inc., Grand Junction, Colo.

Filed Sep. 14, 1979, Ser. No. 75,810

Int. Cl.³ E21C *41/10*

U.S. Cl. 299—2 **40 Claims**

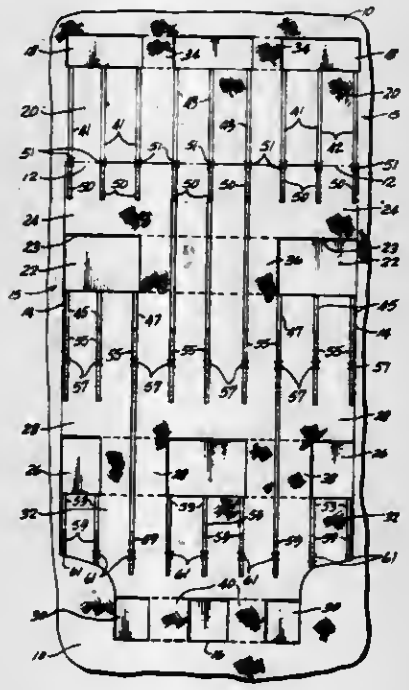

1. A method of recovering shale oil from a subterranean formation containing oil shale which comprises the steps of:

(a) excavating formation to form at least one void in the subterranean formation leaving zones of unfragmented formation above and below each void, such a zone of unfragmented formation having a substantially horizontal free face adjoining such a void, and leaving at least one support pillar of unfragmented formation in such a void, each such support pillar having free faces on opposite sides of such pillar;

(b) placing explosive in at least one of such zones of unfragmented formation for explosively expanding such a zone of unfragmented formation;

(c) preparing such a support pillar for explosive expansion by a method comprising the steps of:

(i) drilling an array of spaced apart substantially horizontal blastholes in such a support pillar, such blastholes having axes substantially perpendicular to a free face of the pillar;

(ii) placing explosive charges into the blastholes;

(d) detonating explosive in a single round comprising:

(i) detonating explosive in the support pillar by detonating explosive in a blasthole at about the center of the blasthole array of such a support pillar first and thereafter detonating explosive in blastholes progressing towards the outer portion of the blasthole array for explosively expanding the support pillar toward the void;

(ii) detonating explosive in at least one of the zones of unfragmented formation for explosively explanding such a zone of unfragmented formation toward the void to form a fragmented permeable mass of formation particles containing oil shale in an in situ oil shale retort;

(e) introducing gas into the fragmented permeable mass in the in situ oil shale retort for establishing a retorting zone in the fragmented permeable mass wherein oil shale is retorted to produce gaseous and liquid products, and for advancing the retorting zone through the fragmented mass; and

(f) withdrawing the gaseous and liquid products from the retort.

4,300,801

METHOD OF SOLUTION MINING SALTS FROM AN UNDERGROUND SALT DEPOSIT

Wiecher D. E. Steenge, Amsterdam, Netherlands, assignor to Shell Internationale Research Maatschappij B.V., Netherlands

Filed Jun. 10, 1980, Ser. No. 158,171

Claims priority, application Netherlands, Jul. 6, 1979, 7905287

Int. Cl.³ E21B *43/28*

U.S. Cl. 299—5 **4 Claims**

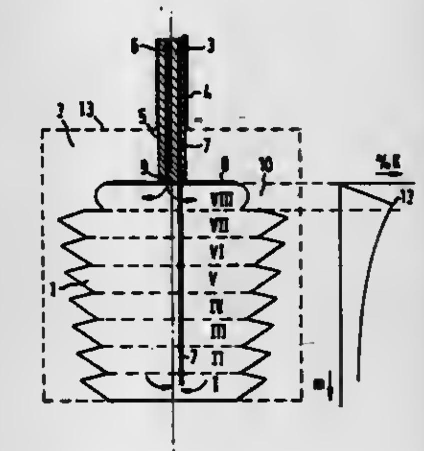

1. Method of solution mining salts from an underground salt deposit having a substantially uniform composition including salts of potassium and magnesium by continuously injecting water via a borehole into the deposit thereby dissolving salts and forming a brine-filled cavity, protecting the roof of the cavity by an inert fluid layer, and continuously recovering brine from the cavity at a level close to the bottom of the cavity, wherein the level at which water is injected into the cavity is periodically raised thereby consecutively dissolving superimposed slices of the part of the deposit around the borehole, and controlling the water injection rate and the brine recovery rate such that the vertical distribution of the potassium content of the brine in the cavity shows a maximum within the uppermost slice and the vertical distribution of the magnesium content increases from the uppermost slice to the lowermost slice, each higher slice being initially formed with a diameter which is larger than that of the adjacent lower slice, the difference in initial slice diameters being such that the continued leaching in the lower slices, during initial formation of the uppermost slice, will increase the diameter of the lower slices until each lower slice has substantially the same diameter and a substantially cylindrical cavity is formed.

4,300,802

APPARATUS FOR DRIFTING OPENINGS IN HARD ROCK

Leonid A. Mitin, Morskoi prospekt, 62, kv. 12; Petr Y. Fadeev, ulitsa Russkaya, 25, kv. 204, both of Novosibirsk; Leonid F. Ponomarev, Zyryanovsky pereulok, 12, kv. 18, Syryanovsk Vostochno-Kazakhstanskoi oblasti; Vladimir Y. Fadeev, ulitsa Tereshkovoi, 6, kv. 180, Novosibirsk; Vyacheslav F. Rybert, ulitsa Zhaksybaeva, 9; Jury V. Rentsky, ulitsa Zhksybaeva, 36, kv. 11, both of Syryanovsk Vostochno-Kazakhstanskoi oblasti; Rim A. Kulagin, ulitsa Tereshkovoi, 2, kv. 22, Novosibirsk; Anatoly A. Vorozheikin, ulitsa Tereshkovoi, 24, kv. 8, Novosibirsk; Nikolai P. Ermilov, ulitsa Rossiiskaya, 12, kv. 56, Novosibirsk; Lidia P. Dimova, ulitsa Pravdy, 5a, kv. 31, Novosibirsk; Adil G. Doskaziev, ulitsa Zhaksybaeva, 13, Syryanovsk Vostochno-Kazakhstanskoi oblasti; Vladlen V. Korobkov, ulitsa Shljuzovaya, 12, kv. 15, Novosibirsk; Sergei A. Babenko, ulitsa 9 Maya, 143b, kv. 93; Mikhail M. Akhmatov, Krasnoarmeisky prospekt 4, kv. 112, both of Tula, all of U.S.S.R.; Nabi K. Zhaksybaev, deceased, late of Alma-Ata, U.S.S.R., and by Ekaterina S. Zhaksybaeva, executrix, ulitsa Pushkina, 50, kv. 3, Alma-Ata, U.S.S.R.

Filed Nov. 7, 1979, Ser. No. 92,050

Int. Cl.³ E21C *29/28*

U.S. Cl. 299—64 **8 Claims**

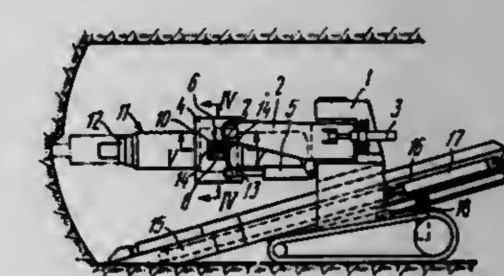

1. An apparatus for drifting openings in hard rock comprising:

a carrier capable of travelling along the floor of the opening:

a jib mounted on said carrier with provision for turning about said carrier in the horizontal plane; means for turning said jib with respect to said carrier in the horizontal plane;

a means of breaking of the percussive type with a percussion tool directly acting upon the rock so as to break same when the means of breaking is set into a given position, said means of breaking being mounted on said jib with a provision for turning about said jib in a vertical plane for setting said means of breaking into said given position, and with a provision for limited turning about said jib in two mutually-perpendicular planes running through the longitudinal axes of said means of breaking;

means for turning said means of breaking with respect to said jib in the vertical plane for setting said means of breaking into said given position; shock absorbing means mounted between said jib and said means of breaking and serving to absorb the undesirable deflections of said means of breaking when said percussion tool recoils from the rock in any direction perpendicular to its longitudinal axis and to reset said means of breaking into said given position after the loading action of rock causing said undesirable deflection stops; and

a means of loading including a mucking conveyor being arranged on said carrier under said jib.

4,300,803

ADHESIVE VEHICLE WHEEL WEIGHT AND METHOD

Jerome J. Chorosevic, Bristol, Va., assignor to Plumbium Manufacturing Corporation, Bristol, Tenn.

Filed Sep. 14, 1979, Ser. No. 75,666

Int. Cl.^{3} B60B *13/00*

U.S. Cl. 301—5 B **16 Claims**

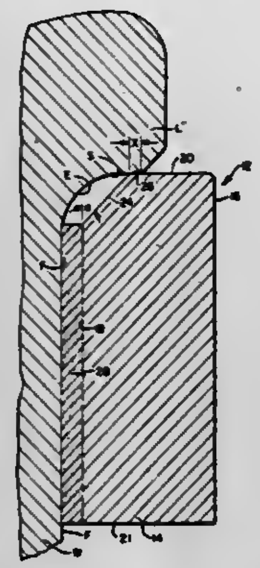

1. An adhesively secured balance weight for counter-balancing vehicle wheels positioned on an axis of rotation and having a rim flange with a protruding lip comprising,
 a mass of a heavy metal having a body for positioning on said flange,
 said body having top and rear surfaces,
 said rear surface of said body being a substantially planar surface for receiving an adhesive layer thereon,
 said top surface of said body having an abutment surface for contact with said protruding lip,
 a chamfer formed between the top and the rear surface by a removal at the arris formed from each surface,
 said top abutment surface extending from the end of the chamfer surface to form abutment direct surface to surface contact between the protruding lip and top abutment surface along a sufficient length substantially concentric with and substantially parallel to said axis of rotation,
 a layer of adhesive positioned on the rear surface for securing the weight to the rim flange to abut the protruding lip with at least a portion of the top surface whereby said weight is held in place without any movement relative to said wheel solely by both the adhesive and said abutment direct surface to surface contact of said top abutment surface with said protruding lip.

4,300,804

HUB FOR A TWO OR THREE WHEEL VEHICLE

Masayuki Hasebe, Sakai, Japan, assignor to Shimano Industrial Company, Limited, Osaka, Japan

Continuation of Ser. No. 14,102, Feb. 22, 1979, abandoned. This application Aug. 22, 1980, Ser. No. 180,479

Claims priority, application Japan, Feb. 28, 1978, 53-26850[U]; Jun. 6, 1978, 53-77576[U]; Feb. 2, 1979, 54-13317[U]

Int. Cl.^{3} B60B *27/00*

U.S. Cl. 301—105 B **2 Claims**

1. A wheel hub comprising:
 a hub shell including a respective hub flange at each axial end thereof, said hub flanges having outer and inner sides relative to said hub shell and projecting radially outwardly of said hub shell and having a plurality of substantially equal axial length spoke bores extending axially of said hub shell and arranged on a concentric circle about the axis of said hub shell, each said hub flange including a plurality of first recessed portions on an outer axial side of said hub flange formed by stepped hub flange portions, each first recessed portion containing one of a first group of spoke bores comprising alternate ones of said spoke bores, and a plurality of recessed second portions on an inner axial side of said hub flange formed by stepped hub flange portions, each second recessed portion containing one of a second group of spoke bores comprising the remaining spoke bores, each of said spoke bores of said second group being adjacent a spoke bore of said first group, the interval of a hub flange in the circumferential direction thereof between a spoke bore of said first group and a spoke bore of a second group being non-uniform, said plurality of first recessed portions being displaced

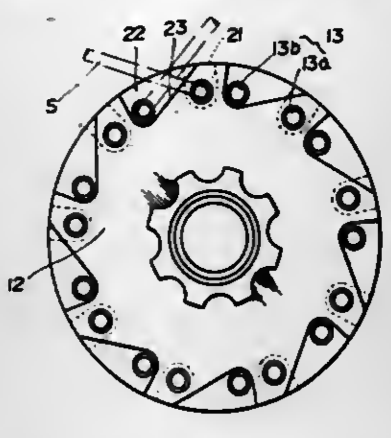

axially outward of said hub shell relative to said plurality of second recessed portions, each of said recessed portions on the outer side of a respective hub flange having guide faces directed forwardly in the rotating direction of said hub shell, when driven, for indicating the proper mounting direction for a spoke to be mounted in a spoke bore provided therein;
 a hub shaft rotatably supporting said hub shell; and
 a pair of bearing means for rotatably supporting said hub shell to said hub shaft.

4,300,805

DUAL-CIRCUIT PRESSURE MEDIUM OPERATED BRAKING SYSTEM LOAD-DEPENDINGLY CONTROLLED FOR MOTOR VEHICLES

Erich Reinecke, Burgdorf, Fed. Rep. of Germany, assignor to WABCO Fahrzeugbremsen GmbH, Hanover, Fed. Rep. of Germany

Filed Jan. 9, 1980, Ser. No. 110,586

Claims priority, application Fed. Rep. of Germany, Feb. 26, 1979, 2907426

Int. Cl.^{3} B60T *8/22*

U.S. Cl. 303—22 R **9 Claims**

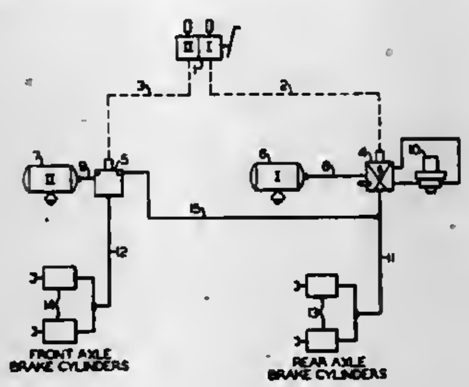

1. In a fluid pressure brake system for a wheeled vehicle having first and second axles, there is provided separate brake control circuits for said first and second axles via which fluid brake control pressure is conducted in accordance with operation of a brake valve device common to said separate brake control circuits, wherein the invention comprises:
 (a) said common brake valve device having an output via which hydraulic pressure is connected to a respective one of said separate brake control circuits;
 (b) pneumatic brake cylinders in each said separate brake control circuit;

 (c) relay valve means in each said separate brake control circuit for connecting a source of compressed air to said pneumatic brake cylinders of a respective one of said brake control circuits, each said relay valve means having a control input connected to a respective one of said outputs of said brake valve device and an output connected to a respective one of said pneumatic brake cylinders, said relay valve means in brake control circuit of said first axle being regulated in accordance with the load condition at said first axle to accordingly adjust the pneumatic pressure of said brake cylinder of said first axle; and
 (d) said relay valve means in said brake control circuit of said second axle having a further control input to which said load adjusted pneumatic brake cylinder pressure of said first axle is connected, whereby the pneumatic pressure at said brake cylinders of said second axle is adjusted according to the load condition at said first axle.

4,300,806

MULTI-STAGE SUPPORT ELEMENT FOR COMPLIANT HYDRODYNAMIC BEARINGS

Hooshang Heshmat, Schenectady, N.Y., assignor to Mechanical Technology Incorporated, Latham, N.Y.

Filed Apr. 3, 1980, Ser. No. 136,957

Int. Cl.^{3} F16C *32/06*

U.S. Cl. 308—9 **10 Claims**

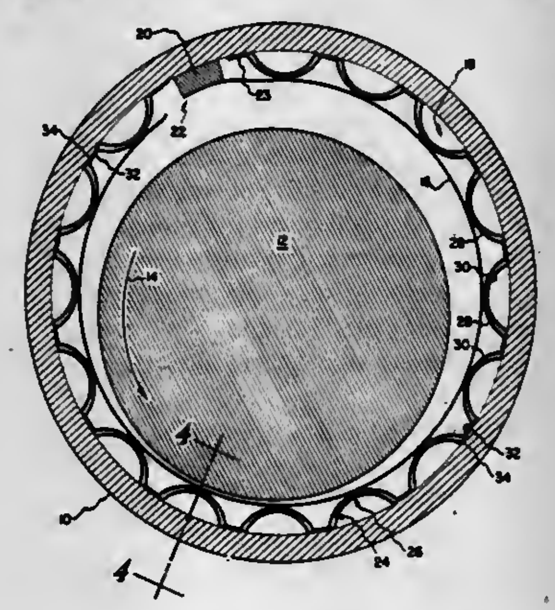

1. A compliant hydrodynamic fluid film bearing, comprising:
 first and second relatively moving members defining therebetween a gap;
 a bearing assembly disposed in said gap and attached to said first member, said second member rotating relative to said bearing assembly and generating a hydrodynamic fluid film between said bearing assembly and said second member for dynamic support of one member by the other member;
 said bearing assembly including a smooth flexible thin bearing sheet and a resilient support element underlying and supporting said bearing sheet in bearing relationship to said second member;
 said support element deflecting under the load exerted by said hydrodynamic fluid film to present an inclined bearing surface of said bearing sheet to the relatively moving surface of said second member;
 said support element being formed of at least two separate foil members, stacked one over the other;
 each of said foil members having raised resilient projections which provide the resilient, compliant support for said bearing sheet, said projections being distributed across said foil members in a similar pattern on both foil members such that said projections are aligned perpendicularly beneath the plane of the overlying bearing sheet in operation;
 said projections on said other foil member being smaller, stiffer, and stronger than said projections on said one foil member;
 whereby said projections constitute a staged parallel spring array for supporting said bearing sheet on said one foil member at low speed, low load conditions wherein greater compliance is desired, and during high-speed, high-load conditions said one foil member projections deflect to the level of said other foil member projections which are stiffer than said one foil member projections and, with said other foil member projections, support the increased load with increased stiffness and damping.

4,300,807

METHOD AND DEVICE FOR BALANCING ROTARY BODIES WITH PASSIVE RADIAL AND ACTIVE AXIAL MAGNETIC SUSPENSION AND FOR ORIENTING THEIR AXIS OF ROTATION

Pierre Poubeau, Le Pecq, France, assignor to Societe Nationale Industrielle Aerospatiale, France

Filed Jun. 8, 1979, Ser. No. 46,741

Claims priority, application France, Jun. 12, 1978, 78 17457

Int. Cl.^{3} F16C *39/06*

U.S. Cl. 308—10 **26 Claims**

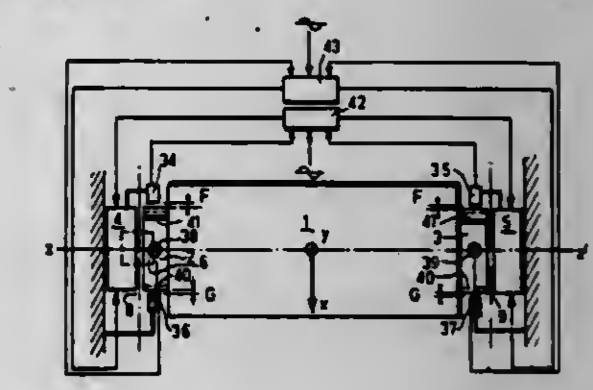

1. Method of balancing a rotary body with a stator, rotor and passive radial and active axial magnetic suspension and of orienting its axis of rotation, consisting of arranging at ends of said stator and rotor, pairs of magnetic rings facing each other with an air gap between them and with an axial field in said air gap, said magnetic rings being excentric on said rotor and concentric on said stator for placing in coincidence the axis of inertia with the rotor axis, said magnetic rings being concentric on said rotor and excentric on said stator for the orientation of the axis of rotation, the correction being obtained by variation of the induction on said magnetic rings of said stator.

4,300,808

TILTING-PAD BEARINGS

Masahiro Yoshioka, Ibaraki, Japan, assignor to Hitachi, Ltd., Tokyo, Japan

Filed Apr. 3, 1980, Ser. No. 136,491

Claims priority, application Japan, Apr. 6, 1979, 54-41082

Int. Cl.^{3} F16C *17/03*

U.S. Cl. 308—76 **4 Claims**

1. A tilting-pad bearing comprising a pad support, a plurality of bearing pads tiltably disposed in surface contact at their arcuate outer peripheral surfaces with an inner surface of the pad support, pad positioning members provided on the pad support so as to be positioned between said bearing pads for positioning circumferential ends of adjacent bearing pads, oil

supply ports provided in and longitudinally of the pad positioning members, and oil outlet grooves provided in the pad support parallel with the axis of the rotary shaft adjacent to the pad positioning members of the pad support.

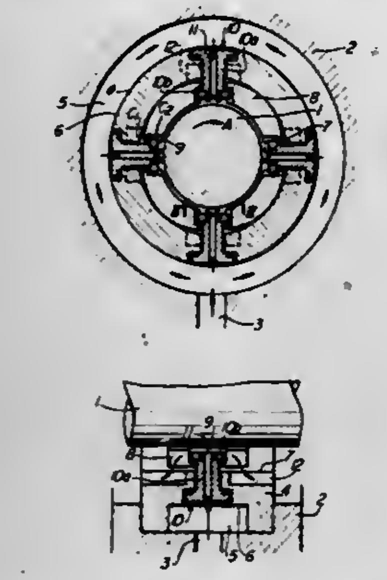

4,300,809
OPEN PILASTER FRAMES FOR ROTARY STORAGE CABINET

Sherwood S. Browalee, Waynesboro, Va., assignor to Acme Visible Records, Inc., Crozet, Va.
Continuation of Ser. No. 949,261, Oct. 6, 1978. This application Aug. 7, 1980, Ser. No. 176,049
Int. Cl.³ A47B *46/00, 49/00;* A47F *3/10*
U.S. Cl. 312—305 **4 Claims**

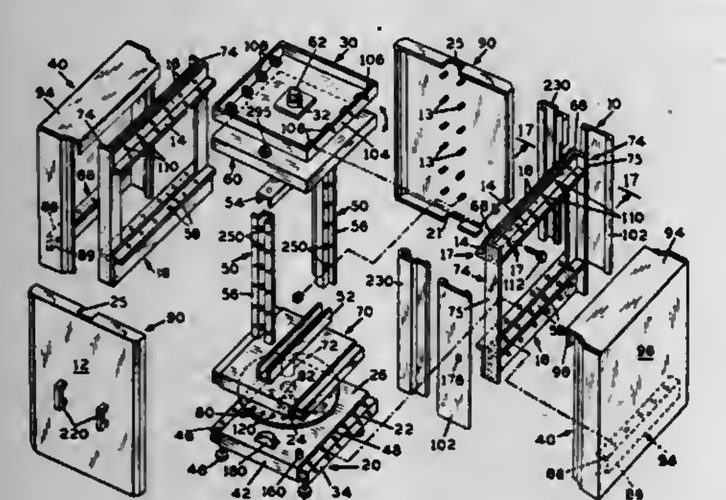

1. In a rotary storage cabinet having a stationary housing with openings in two opposite sides and a rotor mounted for rotation in said housing wherein said rotor has four corners and four sides with two opposite sides positionable to present the contents of the cabinet to the openings in said housing and said rotor also having two other opposite sides positionable to close the openings in said housing, the improvement comprising said housing having a base of rectangular shape; two upright frames; an upper rectangular frame pan; each of said frames having a pair of spaced uprights and cross members extending between and secured to said uprights adjacent the upper and lower ends of said uprights; said upper and lower cross members and uprights which define said upright frames providing an open space into which and from which the respective corners of said rotor pass as said rotor is turned; a lower cross member of each said upright being supported on two surfaces of said base and releasably secured to opposite sides of said base; said frame pan extending between said upright frames and supported by two surfaces of each upper cross member; means releasably securing two opposite sides of said frame pan to one of said surfaces of each upper cross member of said upright frames; and said base, said uprights and said frame pan comprising the basic stable, and sturdy structure of said stationary housing.

4,300,810
ZERO INSERTION FORCE CONNECTOR

James B. Brown, Naperville, and Randall W. France, Oswego, both of Ill., assignors to Bell Telephone Laboratories, Incorporated, Murray Hill, N.J.
Filed Apr. 7, 1980, Ser. No. 137,593
Int. Cl.³ H01R *13/62*
U.S. Cl. 339—74 R **11 Claims**

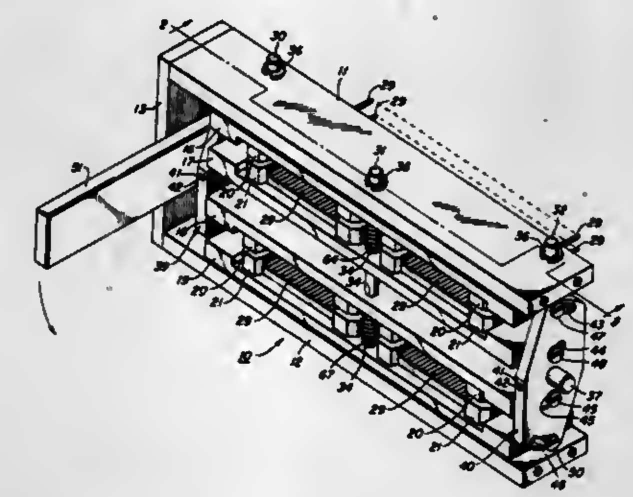

1. Connector apparatus for making contact with the electrical terminals of a printed wiring board comprising
a plate (16) carrying a plurality of terminals (29) corresponding to the terminals of said board and mounted for lateral movement with respect to said board when the terminals of said board are correspondingly positioned opposite to said terminals (29) of said plate (16), and
means for causing said lateral movement characterized in that
said last-mentioned means comprises
a shaft (37) rotatably mounted parallel to said plate (16),
pin means (47) extending from one end of said plate (16), and
a cam plate (40) fixedly mounted at one end of said shaft (37) substantially perpendicular thereto,
said cam plate (40) having a slot (43) formed therein lying at an angle to a line on said cam plate (40) intersecting the longitudinal axes of said pin means (47) and said shaft (37) dimensioned to slidably receive said pin means (47), said angle being determined to cause a predetermined lateral movement of said plate (16) in one direction as said shaft (37) is rotated in one direction.

4,300,811
III-V DIRECT-BANDGAP SEMICONDUCTOR OPTICAL FILTER

Michael Ettenberg, Freehold, and Charles J. Nuese, North Brunswick, both of N.J., assignors to RCA Corporation, New York, N.Y.
Division of Ser. No. 937,588, Aug. 28, 1978. This application Oct. 18, 1979, Ser. No. 86,244
Int. Cl.³ G02B *5/22;* H01B *1/02*
U.S. Cl. 350—1.1 **5 Claims**

1. An optical filter suitable for use in a duplex optical communication system in which wave energy of a first optical wavelength longer than a given optical wavelength is employed for communication in one direction and wave energy of a second optical wavelength shorter than said given wavelength is employed for communication in a direction opposite to said one direction, said optical filter comprising a plate of III-V direct-bandgap semiconductor having a thickness between opposed faces thereof in a range of 50–400 micrometers, said direct bandgap exhibiting an energy bandgap corresponding to said given optical wavelength, whereby said filter passes said first optical wavelength with substantially negligible attenuation and rejects said second optical wavelength with substantially complete absorption.

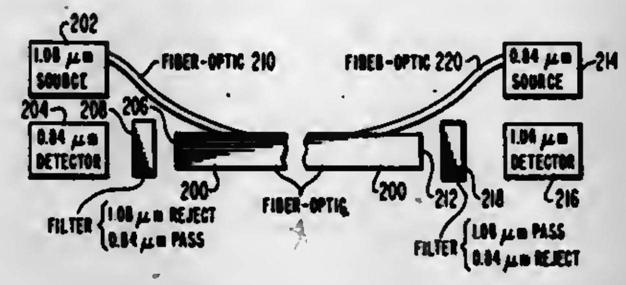

4,300,812
OPTICAL SYSTEM FOR ENDOSCOPES

Ken-Ichi Nakahashi, Hachiouji, Japan, assignor to Olympus Optical Co., Ltd., Tokyo, Japan
Filed May 8, 1979, Ser. No. 37,214
Claims priority, application Japan, May 15, 1978, 53-56518
Int. Cl.³ G02B *7/04*
U.S. Cl. 350—42 **1 Claim**

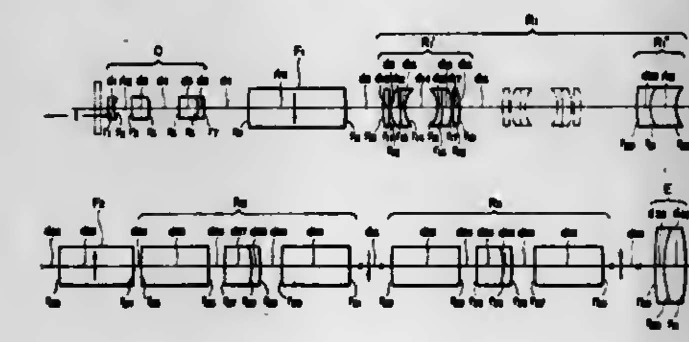

1. An optical system for endoscopes comprising an objective lens, a field lens, a variable-magnification relay lens system, another field lens, two relay lens systems, and an eyepiece arranged in the order from the object side, said optical system for endoscopes having the following numerical data:

	f = 1		
$r_1 = \infty$			
	$d_1 = 0.0321$	$n_1 = 1.7880$	$\nu_1 = 47.43$
$r_2 = 0.1048$			
	$d_2 = 0.1413$		
$r_3 = -1.8540$			
	$d_3 = 0.1284$	$n_2 = 1.6860$	$\nu_2 = 49.16$
$r_4 = -0.2063$			
	$d_4 = 0.2081$		
$r_5 = 5.0094$			
	$d_5 = 0.1359$	$n_3 = 1.62041$	$\nu_3 = 60.27$
$r_6 = -0.1536$			
	$d_6 = 0.0423$	$n_4 = 1.84666$	$\nu_4 = 23.90$
$r_7 = -0.2960$			
	$d_7 = 0.3130$		
$r_8 = 1.0901$			
	$d_8 = 0.6993$	$n_5 = 1.62004$	$\nu_5 = 36.25$
$r_9 = -1.0901$			
	$d_9 = 0.99$ (variable)		
$r_{10} = 0.919$			
	$d_{10} = 0.045$	$n_6 = 1.65830$	$\nu_6 = 57.33$
$r_{11} = 3.170$			
	$d_{11} = 0.008$		
$r_{12} = 0.247$			
	$d_{12} = 0.069$	$n_7 = 1.67790$	$\nu_7 = 55.33$
$r_{13} = 1.134$			
	$d_{13} = 0.031$	$n_8 = 1.62606$	$\nu_8 = 39.10$
$r_{14} = 0.204$			
	$d_{14} = 0.235$		
$r_{15} = -0.210$			
	$d_{15} = 0.031$	$n_9 = 1.59551$	$\nu_9 = 39.21$

-continued

$r_{16} = -1.684$			
	$d_{16} = 0.069$	$n_{10} = 1.67790$	$\nu_{10} = 55.33$
$r_{17} = -0.362$			
	$d_{17} = 0.006$		
$r_{18} = -5.860$			
	$d_{18} = 0.044$	$n_{11} = 1.65830$	$\nu_{11} = 57.33$
$r_{19} = -0.507$			
	$d_{19} = 1.88$ (variable)		
$r_{10} = 0.884$			
	$d_{20} = 0.096$	$n_{12} = 1.56883$	$\nu_{12} = 56.14$
$r_{21} = 0.224$			
	$d_{21} = 0.192$	$n_{13} = 1.61659$	$\nu_{13} = 36.63$
$r_{22} = 0.243$			
	$d_{22} = 0.6046$		
$r_{23} = 1.6829$			
	$d_{23} = 0.6426$	$n_{14} = 1.62004$	$\nu_{14} = 36.25$
$r_{24} = -1.6829$			
	$d_{24} = 0.0465$		
$r_{25} = 1.4110$			
	$d_{25} = 3.3109$	$n_{15} = 1.62004$	$\nu_{15} = 36.25$
$r_{26} = \infty$			
	$d_{26} = 0.1182$		
$r_{27} = 1.8607$			
	$d_{27} = 0.1980$	$n_{16} = 1.65160$	$\nu_{16} = 58.67$
$r_{28} = -0.4708$			
	$d_{28} = 0.0658$	$n_{17} = 1.80610$	$\nu_{17} = 40.95$
$r_{29} = -1.0354$			
	$d_{29} = 0.1696$		
$r_{30} = \infty$			
	$d_{30} = 3.3109$	$n_{18} = 1.62004$	$\nu_{18} = 36.25$
$r_{31} = -1.4110$			
	$d_{31} = 0.5190$		
$r_{32} = 1.4110$			
	$d_{32} = 3.3109$	$n_{19} = 1.62004$	$\nu_{19} = 36.25$
$r_{33} = \infty$			
	$d_{33} = 0.1182$		
$r_{34} = 1.8607$			
	$d_{34} = 0.1980$	$n_{20} = 1.65160$	$\nu_{20} = 58.67$
$r_{35} = -0.4708$			
	$d_{35} = 0.0658$	$n_{21} = 1.80610$	$\nu_{21} = 40.95$
$r_{36} = -1.0354$			
	$d_{36} = 0.1696$		
$r_{37} = \infty$			
	$d_{37} = 3.3109$	$n_{22} = 1.62004$	$\nu_{22} = 36.25$
$r_{38} = -1.4110$			
	$d_{38} = 1.4141$		
$r_{39} = 2.2095$			
	$d_{39} = 0.0642$	$n_{23} = 1.78472$	$\nu_{23} = 25.7$
$r_{40} = 0.6153$			
	$d_{40} = 0.1605$	$n_{24} = 1.67003$	$\nu_{24} = 47.3$
$r_{41} = -1.0717$			

wherein reference symbols r_1 through r_{41} respectively represent radii of curvature of respective lens surfaces, reference symbols d_1 through d_{40} respectively represent thicknesses or respective lenses and airspaces between respective lenses, reference symbols n_1 through n_{24} respectively represent refractive indices of respective lenses, and reference symbols ν_1 through ν_{24} respectively represent Abbe's numbers of respective lenses.

4,300,813
FIBER OPTIC TRANSDUCER AND METHOD OF MANUFACTURE THEREFOR

Robert L. Gravel, Stow, Mass., assignor to Sperry Corporation, New York, N.Y.
Filed Sep. 4, 1979, Ser. No. 71,893
Int. Cl.³ G02B *5/14;* G01L *9/00*
U.S. Cl. 350—96.10 **1 Claim**

1. An optical transducer comprising:
first means for mounting optical transmission lines;
a first optical transmission line having a first longitudinal axis and a first end face oriented substantially perpendicularly to said first longitudinal axis, said first optical transmission line secured to said first mounting means such that said first end face is fixedly positioned;

second means for mounting optical transmission lines;

a second optical transmission line having a second longitudinal axis and a second end face oriented substantially perpendicularly to said second longitudinal axis, said second optical transmission line secured to said second mounting means such that a section thereof extends for a predetermined distance to position said second end face longitudinally a predetermined short distance from said first end face, said second end face being displaceable from an initial position;

spring means for positioning said second mounting means; and

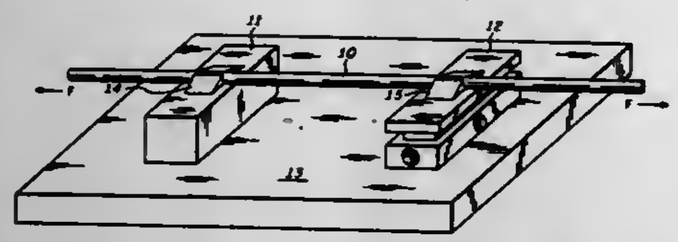

pressure sensitive means responsive to applied pressure and coupled to flex said spring means such that under a predetermined ambient pressure level said first and second longitudinal axes are transversely offset to establish an ambient optical energy coupling factor between said first and second optical transmission lines in a range between substantially 20% and 90% and such that said second end face is displaced distances corresponding to pressure differentials from said predetermined ambient pressure whereby applied pressures are transformed into displacements of said second end face thus causing a variation in said energy coupling factor between said first and second optical transmission lines that is representative of said applied pressures.

4,300,814
METHOD FOR BALANCING AN INTEGRATED OPTICAL DEVICE AND A DEVICE OBTAINED BY MEANS OF SAID METHOD
Alain Carenco, 68ter, Ave. Foch, 92260 Fontenay aux Roses, France
Filed Feb. 6, 1980, Ser. No. 118,995
Claims priority, application France, Feb. 15, 1979, 79 03848
Int. Cl.³ G02B *5/172*
U.S. Cl. 350—96.12 **7 Claims**

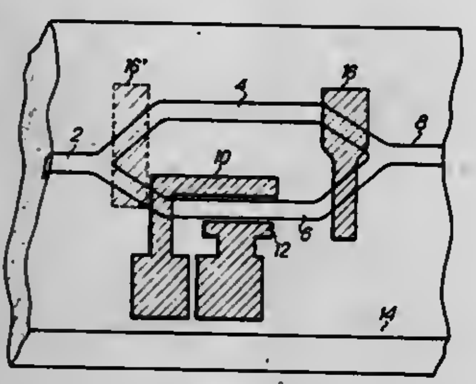

1. A method for balancing an integrated optical device comprising at least two similar arms each constituted by a light guide, wherein said method consists:

in depositing a thin metal film on at least one of the two guides,

in measuring the unbalance between the light intensities transmitted by the two arms,

in adjusting the dimensions of the thin metal film so as to reduce said unbalance to zero.

4,300,815
CONNECTOR END FITTING FOR OPTICAL MONOFIBRE
Christian Malsot; Roland Desmurs, and Jean Bouygues, all of Suresnes, France, assignors to Socapex, Suresnes, France
Filed Oct. 25, 1979, Ser. No. 88,457
Claims priority, application France, Oct. 27, 1978, 78 30606
Int. Cl.³ G02B *7/26*
U.S. Cl. 350—96.20 **4 Claims**

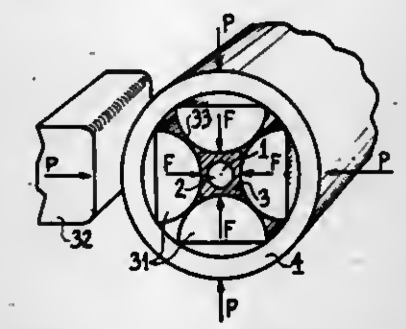

1. A connector end fitting for an optical fiber having a plastic sheath comprising:

a permanently deformable centering jacket;

an axial channel defined within said centering jacket;

at least four (4) jaws within said axial channel, said jaws defining thereamong an axial passage within said axial channel for receiving the plastic sheathed optical fiber, said jaws being positioned such that they will be in tangential contact with one another after an application of radial forces to the outer surface of the jacket at points corresponding to the jaws, the radial forces (a) causing depressions in the jacket and leaving portions thereof with its original diameter, and (b) forcing the jaws toward one another so as to restrict the axial passage defined by them to a diameter that is less than the diameter of the plastic sheath, but greater than the diameter of the optical fiber, the restriction of the passage causing a spontaneous centering of the optical fiber within its sheath and within the centering jacket.

4,300,816
WIDE BAND MULTICORE OPTICAL FIBER
Elias Snitzer, West Hartford, and Gerald Meltz, Avon, both of Conn., assignors to United Technologies Corporation, Hartford, Conn.
Filed Aug. 30, 1979, Ser. No. 71,513
Int. Cl.³ G02B *5/14*
U.S. Cl. 350—96.33 **2 Claims**

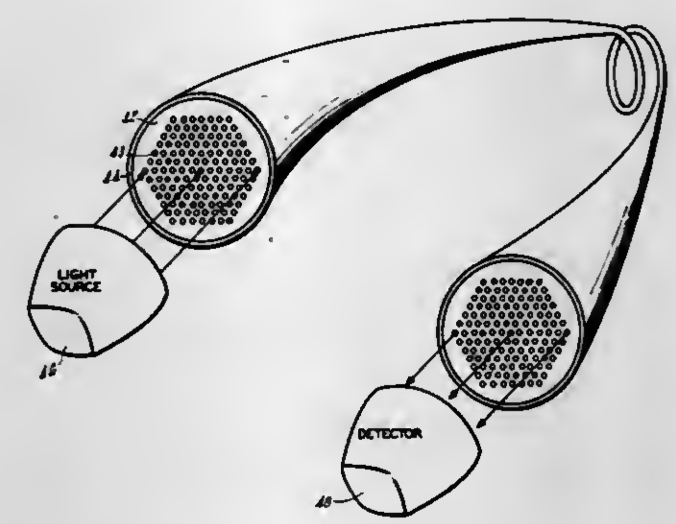

1. An optical fiber, comprising:

a plurality of cores, identical in cross section size and material, located in a common cladding, said cores being dimensioned and fabricated from such material so as to support only the lowest order modes which has the same propagation properties for the two independent states of polarization, but where each core of said array is spaced from adjacent cores at a distance just sufficient to decrease the light energy cross-talk between cores as a function of distance to satisfy a predetermined bandwidth requirement on modal dispersion, thereby providing the maximum light-carrying capacity consistent with the predetermined light information bandwidth.

4,300,817
PROJECTION LENS
Ellis I. Betensky, Tel Aviv, Israel, assignor to U.S. Precision Lens Incorporated, Cincinnati, Ohio
Continuation-in-part of Ser. No. 940,724, Sep. 8, 1978, abandoned. This application Sep. 5, 1979, Ser. No. 70,748
Int. Cl.³ G02B *3/04, 9/12, 27/18*
U.S. Cl. 350—412 **37 Claims**

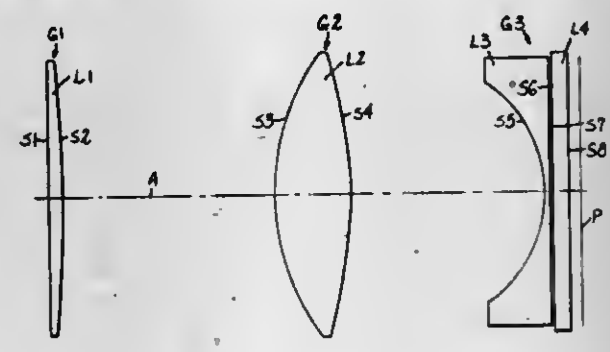

1. A projection lens for a cathode ray tube display consisting of three groups, the first group from the image end comprising an element of weak optical power and serving primarily to correct for aperture dependent aberrations, the second group consisting of a bi-convex element of positive power and providing essentially all of the positive power of the overall lens, the third group comprising a negative element having a concave image side surface and serving as a field flattener essentially correcting the Petzval curvature of the elements of said first and second groups.

4,300,818
MULTIFOCAL OPHTHALMIC LENS
Ronald A. Schachar, 213 N. Barrett, Denison, Tex. 75020
Filed Mar. 13, 1978, Ser. No. 885,942
Int. Cl.³ A61B *3/14;* **G02C** *1/00, 7/02;* **G02F** *1/13*
U.S. Cl. 351—7 **3 Claims**

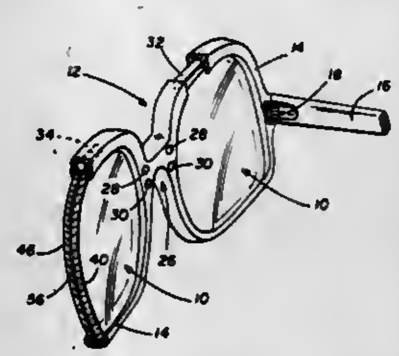

1. A pair of multifocal eyeglasses which utilizes varying focal lengths to provide accommodation for both near and far distances while allowing the user to view both near and far distances through the center of the lens or any part of the lens comprising:

a pair of first and second lens elements, said lens elements including a first liquid crystal layer disposed adjacent said first lens, a second liquid crystal layer disposed adjacent said second lens and first and second electrodes connected to each of said first and second liquid crystal layers, said first and second lenses being substantially coextensive with said first and second liquid crystal layers, respectively, said liquid crystal layers capable of changing in orientation to present a variable index of refraction under the action of an applied electric field;

a voltage supply source for applying a voltage to said electrodes to vary the index of refraction presented by said first and second liquid crystal layers, such that in response to application of said variable voltage to said electrodes, the focal length of said first and second lenses changes;

means for varying said voltage applied to said electrodes to determine the focal length of the lens elements including means for tracking the movement of the eyes of the user, such that a convergent movement of the eyes for near and distant vision and parallel lateral movement of both eyes is detected, said means for tracking the movement of the eyes including a first light source mounted adjacent said first lens element for generating a beam of light to impinge upon the sclera of the user's eye adjacent and to the side of the limbus of that eye when the user is looking straight ahead at distant objects, a second light source mounted adjacent said second lens element for generating a beam of light directed to impinge upon the cornea of the other eye of the user, adjacent and to the side of the limbus of that eye when the user is looking straight ahead at distant objects, and at least one photodiode light detector mounted adjacent each said lens element for detecting light from said first and second light sources that is reflected from each eye and for producing output signals; and

means responsive to said tracking means for generating a control signal for application to said voltage supply source including amplifier means for amplifying the signals from said photodiodes and processing means for providing the control signal based upon the relative intensity of light sensed by said photodiodes, said processing means being programmed such that no change in the control signal occurs when parallel lateral movement of both eyes is detected to prevent unwanted change of the focal length of said lens.

4,300,819
EYEGLASSES FOR AIDING COLOR BLIND VIEWERS
Donald E. Taylor, Rte. 2, Box 144, Mundelein, Ill. 60060
Filed Nov. 7, 1979, Ser. No. 91,964
Int. Cl.³ G02C *7/02;* **C02C** *7/10*
U.S. Cl. 351—41 **7 Claims**

4. In the combination of a pair of eyeglasses worn by a color blind viewer so that one lens is located in front of each eye for viewing therethrough, the improvement in said eyeglasses comprising:

one of said lenses consisting essentially of a clear lens element of a clear homogeneous material for passing light therethrough and a means for forming a mirror surface over the clear lens element; and

the other of said lenses consisting essentially of a colored lens element of a homogeneous colored material for passing light therethrough and a means for forming a mirror surface over the colored lens element.

4,300,820
WATER ABSORPTIVE COMPOSITION
Kishore R. Shah, Chelmsford, Mass., assignor to The Kendall Company, Walpole, Mass.
Continuation-in-part of Ser. No. 100,375, Dec. 5, 1979, abandoned, which is a continuation-in-part of Ser. No. 957,885, Nov. 6, 1978, abandoned. This application Oct. 27, 1980, Ser. No. 201,349
Int. Cl.³ C08L *39/04, 45/00;* **G02C** *7/04*
U.S. Cl. 351—160 H **11 Claims**

7. A composition capable of absorbing more than 45% of its weight of water without dissolution at room temperature to form an optically clear hydrogel consisting essentially of an optically clear blend of (1) 40 to 98% by weight, based on the

total weight of the blend, of a water-soluble polymer of a vinyl lactam having the structure

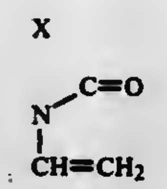

in which X represents an alkylene bridge having three to five carbon atoms, or a water-soluble copolymer thereof with 1 to 90 mole percent of copolymerizable monomer containing a polymerizable ethylenic unsaturation, said polymer or copolymer having a molecular weight from 10,000 to 1,000,000 and (2) 2 to 60% by weight of a water-insoluble copolymer consisting essentially of 50 to 90% by weight, based on the total weight of the copolymer, of a hydrophobic water-insoluble ethylenically unsaturated monomer, 2 to 12% by weight of an ethylenically unsaturated monomer containing an acid group, and from 15 to 45% by weight of a hydrophilic ethylenically unsaturated monomer free from acidic groups.

10. A soft contact lens made of the composition claimed in claim 7.

4,300,821
PHOTOCHROMIC OPHTHALMIC LENS OF ORGANIC MATERIALS
Bernard Mignen, Saint Maur, France, assignor to Essilor International Cie Generale d'Optique, Creteil, France
Filed Feb. 26, 1980, Ser. No. 124,906
Claims priority, application France, Feb. 28, 1979, 79 05234
Int. Cl.³ B29D *11/02;* **G02B** *5/23;* **G02C** *7/10*
U.S. Cl. 351—163 6 Claims

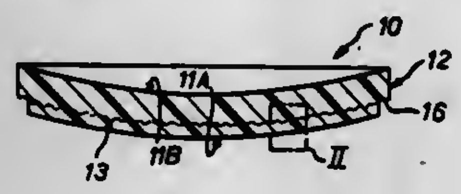

1. An ophthalmic lens made of organic material and comprising at least one layer of photochromic mineral glass within its mass, said layer of photochromic mineral glass having a fibrous structure.

4,300,822
MULTIPURPOSE FILM CASSETTE HAVING BALANCED FORCE PROCESS MODE SWITCH
Sheldon D. Powers, Stoneham, Mass., assignor to Polaroid Corporation, Cambridge, Mass.
Filed Aug. 6, 1979, Ser. No. 63,673
Int. Cl.³ G03C *11/00*
U.S. Cl. 352—130 5 Claims

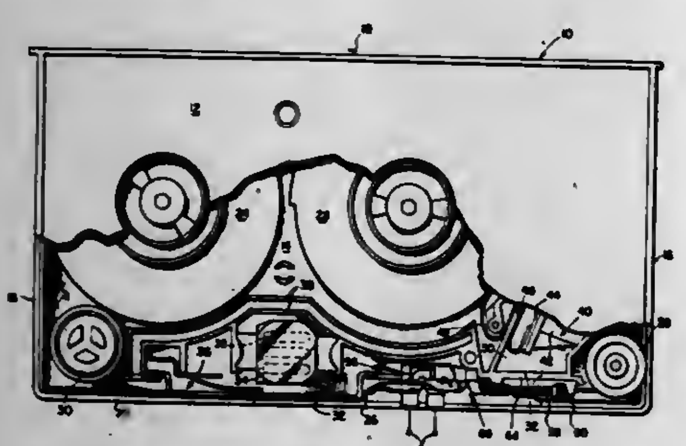

1. A photographic film cassette for use with other apparatus, said cassette configured for depositing a coating of processing fluid on a moving run of a cassette-retained photographic film strip to develop viewable images thereon, said cassette comprising:

a cassette housing;

means responsive to a drive arrangement of the other apparatus for advancing the film along a given path within said housing;

means actuatable responsive to film strip advancement in a given direction for depositing processing fluid on the advancing film strip;

means for indicating to the other apparatus the processed or unprocessed condition of the film strip, said indicating means comprising a pair of spaced apart conductive elements fixedly mounted within said cassette, each of said conductive elements having a first conductive terminal, each of said first conductive terminals being non-resilient, and being rigidly supported in spaced apart relationship with respect to the other of said first conductive terminals at a location in the interior of said cassette and in a plane which is parallel to the plane of the advancing film strip, and each of said pair of spaced apart conductive elements having a second conductive terminal positioned at a location adjacent a wall of said cassette housing; and

a contact element slidably mounted in said cassette for movement, responsive to film advancement in said given direction, from a first position wherein a conductive portion of said element is in electrical connection between said non-resilient, rigidly supported first conductive terminals and a second position wherein said conductive element is not in electrical connection between said first conductive terminals so as to alter the conductive condition across said conductive elements between a closed and an open condition in accordance with displacement of said slidably mounted contact element, thereby indicating said process condition to said other apparatus.

4,300,823
AUTO-FOCUS CAMERA HAVING A RANGEFINDER
Akira Yamanaka, and Toshinori Imura, both of Sakai, Japan, assignors to Minolta Camera Kabushiki Kaisha, Azuchi, Japan
Continuation of Ser. No. 946,423, Sep. 25, 1978, abandoned. This application Jul. 26, 1979, Ser. No. 60,864
Claims priority, application Japan, Sep. 30, 1977, 52-118317
The portion of the term of this patent subsequent to Jan. 8, 1997, has been disclaimed.
Int. Cl.³ G03B *3/10*
U.S. Cl. 354—25 11 Claims

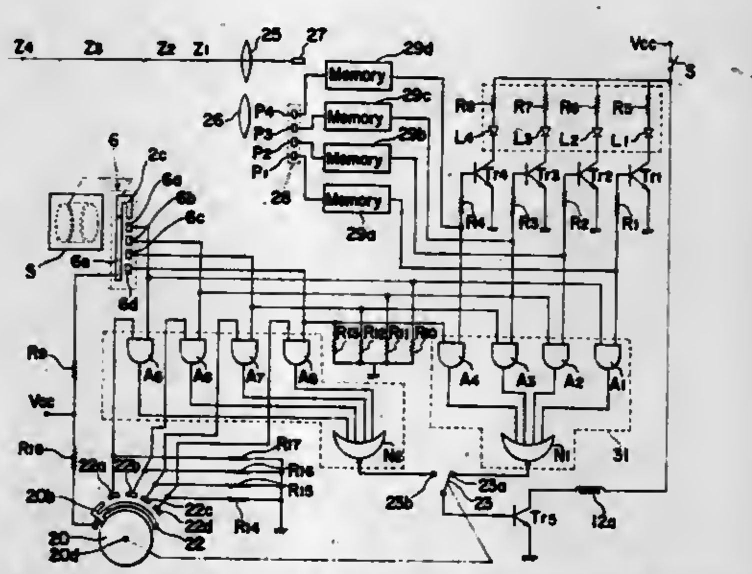

8. An auto-focus camera having an objective lens means comprising:

an auto-focus means for electrically generating an auto-focus signal with respect to an object to be focused;

a manual-focus means for manually setting an object distance;

a manual-focus signal generation means for electrically generating a manual-focus signal indicative of said object distance manually set by said manual-focus means;

an electrical control means, selectively responsible to one of said auto-focus signal and said manual-focus signal, for electrically controlling said objective lens means for focusing; and

a mode selector switch means for selecting between an auto-focus mode and a manual-focus mode, said electrical control means being electrically responsive to said auto-focus signal in said auto-focus mode, and to said manual-focus signal in said manual-focus mode.

4,300,824
SIGNAL PROCESSING CIRCUITRY FOR A DISTANCE MEASURING SYSTEM
Ryuji Tokuda, Tokyo, Japan, and Bernhard H. Andresen, Dallas, Tex., assignors to Canon Inc., Tokyo, Japan and Texas Instruments Incorporated, Dallas, Tex.
Filed Nov. 15, 1979, Ser. No. 94,418
Int. Cl.³ G03B *3/10*
U.S. Cl. 354—25 21 Claims

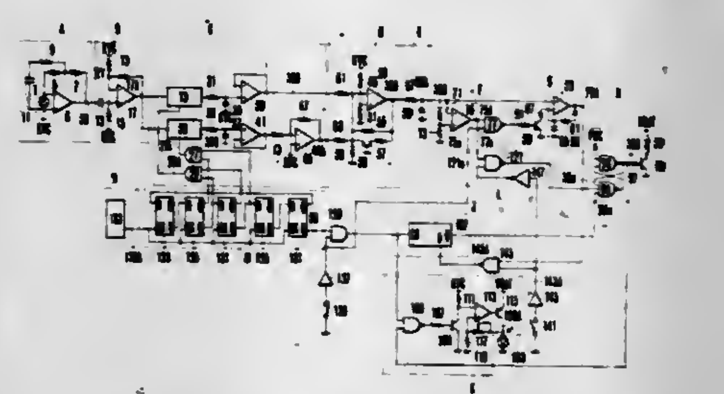

1. A signal processing circuit for a distance measuring system having a light measuring circuit for converting light from an object to be measured into an electrical signal, comprising:

(a) an output circuit for producing distance information; and

(b) quasi-compression means operatively connected between the light measuring means and the output circuit, the quasi-compression means including an amplifier having a given gain for amplifying the electrical signal from said light measuring circuit and control means connected to the amplifier for maintaining the given gain of said amplifier when the electrical signal is below a predetermined level of magnitude and for decreasing the gain of said amplifier when the electrical signal exceeds the predetermined level of magnitude.

4,300,825
CONTROL OF SHUTTER CLOSING FOR EXCESSIVE OBJECT BRIGHTNESS
Mashio Kitaura, Toadabayashi, and Nobuyuki Taniguchi, Sakai, both of Japan, assignors to Minolta Camera Kabushiki Kaisha, Japan
Filed Jan. 25, 1980, Ser. No. 115,351
Claims priority, application Japan, Jan. 30, 1979, 54-9812
Int. Cl.³ G03B *7/083*
U.S. Cl. 354—34 17 Claims

1. A camera exposure control system comprising:

a light measuring circuit for generating an output as a function of the brightness of an object to be photographed;

a shutter control circuit for establishing an exposure time commensurate with said output to initiate shutter closure upon the expiration of said exposure time;

a delay circuit for lengthening said exposure time, with respect to a given exposure time established by said shutter control circuit;

an out-of-range detecting circuit for generating a signal when said output exceeds a predetermined level; and

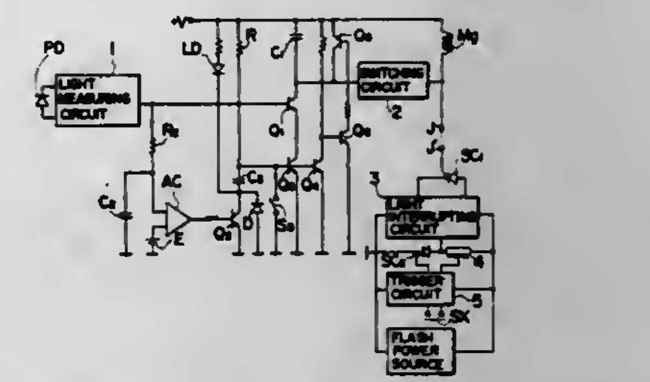

a delay control circuit for actuating said delay circuit in response to the signal from said detecting circuit.

4,300,826
FOCUS INDICATING DEVICE FOR CAMERA
Harumi Aoki, Kiyose; Katsuhiko Miyata, Ageo, and Koji Suzuki, Asaka, all of Japan, assignors to Asahi Kogaku Kogyo Kabushiki Kaisha, Tokyo, Japan
Filed Feb. 21, 1980, Ser. No. 123,313
Claims priority, application Japan, Mar. 7, 1979, 54-26500
Int. Cl.³ G03B *13/18*
U.S. Cl. 354—60 L 6 Claims

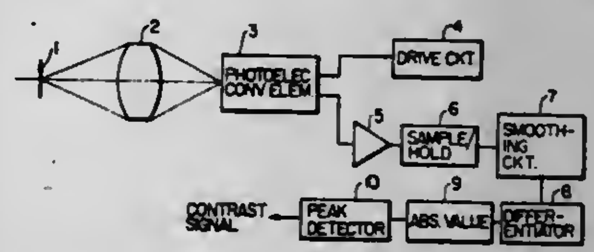

1. A focus position indicating device for a camera for determining a focus position from a contrast signal of an image of an object to be photographed comprising: an analog-to-digital converter for converting said contrast signal into a digital signal; a plurality of display elements arranged in a straight line and which are connected to be turned on and off; and a drive circuit for turning on said display elements in response to said digital signal such that said elements are turned on sequentially beginning at only one end of said straight line, and such that the number of said display elements which are turned on is a maximum at the focus position.

4,300,827
SELF-DEVELOPING PHOTOGRAPHIC APPARATUS WITH INCLINED FILM EXIT PATH
Philip G. Baker, Peabody, and Gerald L. Matthews, Raynham, both of Mass., assignors to Polaroid Corporation, Cambridge, Mass.
Filed May 23, 1980, Ser. No. 152,858
Int. Cl.³ G03D *5/02*
U.S. Cl. 354—293 7 Claims

1. Photographic apparatus configured to be supported on a substantially horizontal support surface at approximately table top height and operable for effecting distribution of a fluid processing composition over an area of a self-developing film unit in response to manually pulling the film unit out of said apparatus, said apparatus comprising:

a housing for receiving such a film unit and having a film withdrawal opening through which the film unit is pulled along a preferred exit path, exteriorly of said housing, to optimize fluid distribution; and

means for supporting said apparatus on the support surface with said housing arranged thereon so that said preferred exit path is inclined upwardly and away from the support

surface in the direction of film pull and is within a range of natural pull paths along which an operator most likely will pull the film unit and including shallow angle pull paths

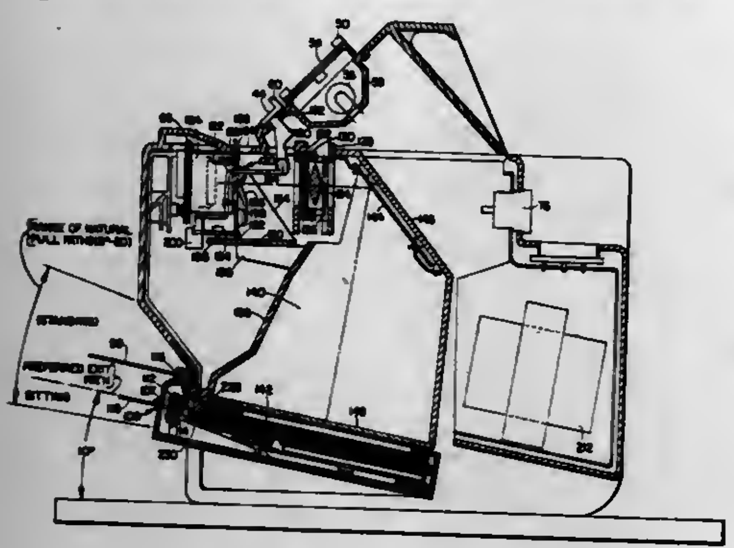

resulting from the operator being in a sitting position relative to the support surface and steeper angle pull paths resulting from the operator being in a standing position relative thereto.

4,300,828
PHOTOSENSITIVE SHEET PROCESSOR
Kenneth M. Kaufmann, Minneapolis, Minn., assignor to Pako Corporation, Minneapolis, Minn.
Filed Jul. 14, 1980, Ser. No. 168,030
Int. Cl.³ G03D *3/08*
U.S. Cl. 354—322 6 Claims

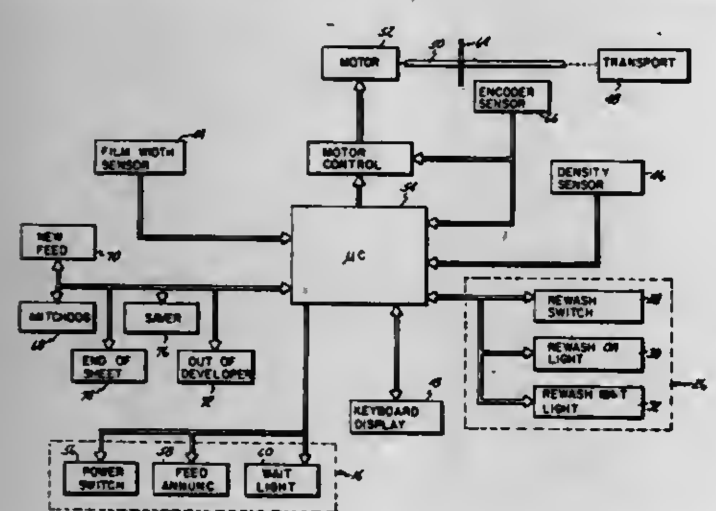

5. In a processor of sheets of photosensitive material having developer, fix, and wash tanks containing processing fluid for photoprocessing the sheets, a dryer for drying the sheets, an entrance opening through which the sheets enter the processor, an exit opening through which the sheets exit the processor, and means for transporting sheets through the processor, an improvement comprising:

first material sensing means positioned proximate the entrance opening for sensing the presence of sheets entering the processor and providing signals indicating when a leading edge and a trailing edge of each sheet enters the processor;

travel sensing means for providing signals indicative of incremental lineal travel of sheets through the processor;

second material sensing means for sensing material at a predetermined location between the wash tank and the exit opening and for providing a signal indicating presence of a sheet at the predetermined location;

means for providing a signal indicating that the leading edge of a sheet has reached the location of a second material sensing means, based upon the signals from the first material sensing means and the travel sensing means; and

means for providing an error indication if the second material sensing means has not yet sensed material when the signal indicating that the leading edge of a sheet has reached the location of the second material sensing means has been provided.

4,300,829
CASCADE ILLUMINATION AND SWITCH CONTROL CONSOLE
Charles D. Braswell, Rochester, and Robert A. Burkett, Fairport, both of N.Y., assignors to Xerox Corporation, Stamford, Conn.
Filed Oct. 30, 1979, Ser. No. 89,429
Int. Cl.³ G03G *15/00*
U.S. Cl. 355—14 R 7 Claims

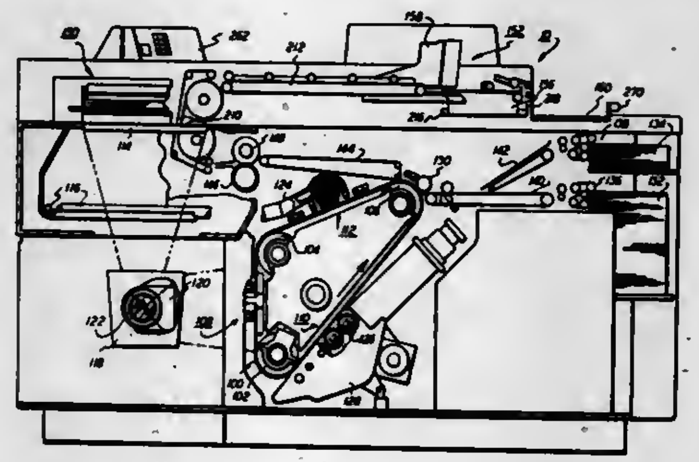

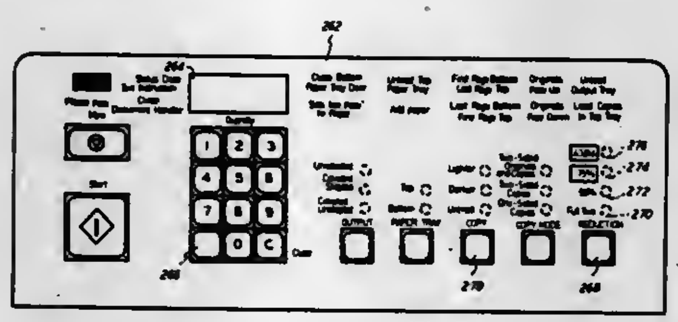

4. In a reproduction machine including an operator console having a predetermined number of machine operation selectors, the combination of

first means to activate a first machine operation,

means to provide an immediate indication of the first operation selected, said first means adapted for activating a second machine operation,

means to provide an immediate indication of the second operation selected, and

means to inhibit any machine operation for a predetermined period of time.

4,300,830
SHEET REMOVAL ASSEMBLY
Raymond G. Cormier, Nashua, N.H., and Jacques Gulguizian, Haverhill, Mass., assignors to Nashua Corporation, Nashua, N.H.
Filed Sep. 18, 1979, Ser. No. 76,576
Int. Cl.³ G03G *15/00*; B65H *29/56*
U.S. Cl. 355—3 SH 6 Claims

1. In a photocopying apparatus having

a moveable photosensitive member,

means for charging the photosensitive member,

means for scanning an original document and exposing said photosensitive member to a pattern of radiant energy, whereby said photosensitive member is selectively discharged by said radiant energy to form a latent image,

means for developing said latent image to form a developed image,

means for transferring said developed image to a transfer material brought into contact with said photosensitive member,

means for removing said transfer material from contact with said photosensitive member, and

means for cleaning said photosensitive member in preparation for a next copy cycle,

the improvement wherein said removing means comprises

a first and a second mechanical trip element which move in a timed relation to the movement of said transfer material,

a sheet removal mechanism having

a sheet removal blade,

means for moving said blade between a first position in which said blade overlays a marginal portion of said photosensitive member for engaging a corner of a leading edge of said sheet conveyed to said transfer station, preventing said corner from contacting said

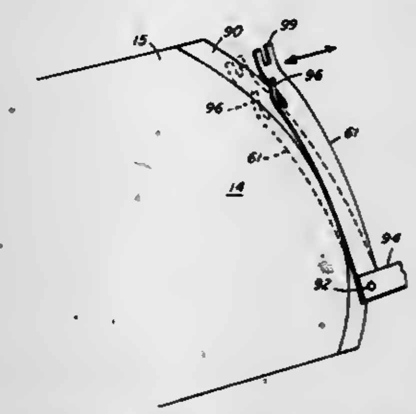

photosensitive surface, and a second position in which said blade is removed from its overlying position with respect to said photosensitive member whereby said sheet can, at said transfer station, contact said surface at said marginal portion,

said moving means being responsive to said trip elements after a copy cycle is completed for maintaining said blade member in said second position,

means for mounting said trip elements for moving said blade to and from said first position for preventing a leading edge corner of said transfer material from contacting said photosensitive member, and

said blade in said first position, guiding material away from said photosensitive member to a transport mechanism,

whereby full width transfer from the photosensitive member to the transfer material takes place over substantially all of the edge portion of the transfer material.

4,300,831
SLIT EXPOSURE TYPE ILLUMINATION APPARATUS
Kouki Isago, Kawasaki, Japan, assignor to Ricoh Company, Ltd., Tokyo, Japan
Filed Mar. 10, 1980, Ser. No. 128,495
Claims priority, application Japan, Mar. 16, 1979, 54-34183[U]; Mar. 26, 1979, 54-39070[U]
Int. Cl.³ G03B *27/54*
U.S. Cl. 355—67 10 Claims

1. A slit exposure type illumination apparatus for use in copying machines comprising:

a reflector having a quadratic reflecting surface,

a hollow member made of a material which allows visible light to pass through and reflects infrared light and which is disposed near the focal line of said reflector, and

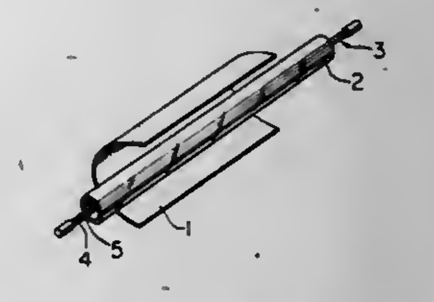

a linear light source which is disposed inside said hollow member.

4,300,832
PHOTOCOPY MACHINES
Walter A. Hudson, Fox River Grove, Ill., assignor to AM International, Inc., Los Angeles, Calif.
Filed May 19, 1980, Ser. No. 151,503
Int. Cl.³ G03B *27/30*
U.S. Cl. 355—106 10 Claims

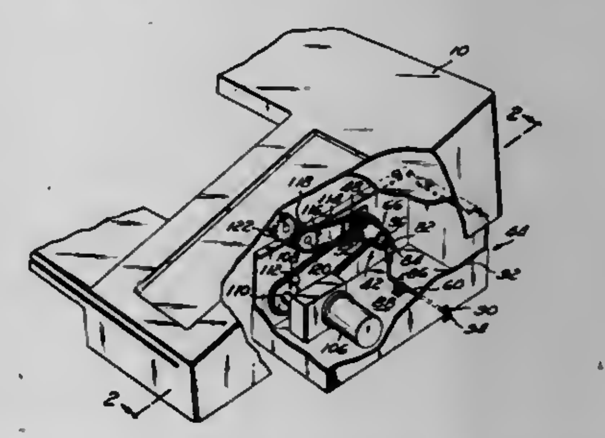

1. In a photocopy machine including roller means adapted to be positively rotated in one direction defining a first mode of operation and freely rotatable in either direction defining a second mode of operation, drive means for the roller means, comprising:

driver means including a uni-directional clutch for positively rotating the roller means;

driver means rotatably mounted on the driver means operable between an active condition in driving engagement with the driver means for operating the roller means in the first mode, and an inactive condition out of driving engagement with the driver means for operating the roller means in the second mode;

drive element means actuable between a first position for operating the driven means in the active condition and a second position for operating the driven means in the inactive condition;

hub means provided on the driver means including an axial bore for supporting the drive element means in its movement between the first and the second position;

means for selectively actuating the drive element means between the first and the second position; and

power means for rotating the driven means.

4,300,833

METHOD FOR BACKGROUND CORRECTED SIMULTANEOUS MULTIELEMENT ATOMIC ABSORPTION ANALYSIS

James M. Harnly, Rockville; Thomas C. O'Haver, Silver Spring; Wayne R. Wolf, Brookeville, all of Md., and Bruce M. Golden, Warminster, Pa., assignors to The United States of America as represented by the Secretary of Agriculture, Washington, D.C.

Filed Oct. 26, 1979, Ser. No. 88,665

Int. Cl.³ G01J *3/36;* **G01N** *21/74*

U.S. Cl. 356—307 **8 Claims**

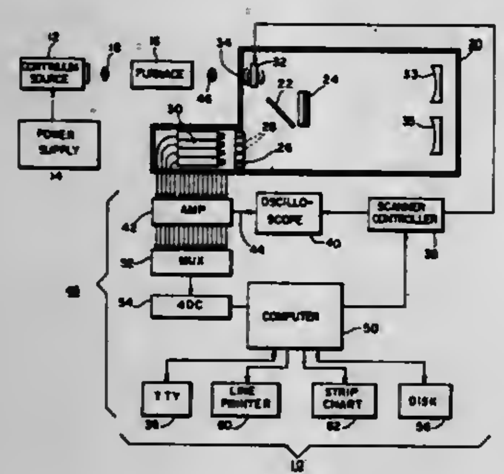

1. A method for simultaneous, multi-element, atomic absorption analysis of a plurality of known elements, comprising the steps of:

atomizing a sample for which quantities of the plurality of known elements are to be simultaneously determined;

illuminating the atomized sample with a continuum light source;

directing the resultant light through a high resolution polychromator, having an entrance aperture, while wave length modulating the light at a point behind the entrance aperture;

detecting light simultaneously, at a sampling frequency greater than ten times the modulation frequency times the number of elements to be analyzed, at a plurality of locations on the focal plane of the polychromator, each of the locations corresponding to a wavelength uniquely identifying an absorption peak for one of the elements, and converting the light into amplified electrical signals corresponding to the intensities of the light, the period of electrical signal acquisition being much smaller than the period of wavelength modulation and the period of wavelength modulation being much smaller than the duration of the shortest transient absorption signal;

coordinating the wavelength modulation and the light detection so that multiple acquisitions of data are made for each of the elements during each modulation cycle, the multiple acquisitions being made in a pattern symmetrically distributed on and about the centers of each of the wavelengths defining the absorption peaks, a ratio of the acquisitions on and off each of the absorption peak wavelengths providing a measure of absorbance for each of the elements; and,

storing at least one of:

instantaneous levels of the electrical signals from which the ratios can be determined; and, the ratios, which can be determined during the sampling and detection, whereby the analytical results demonstrate improved quality, improved stability, correction for even and sloped background interferences and a useful analytical range extended by at least five orders of magnitude.

4,300,834

INDUCTIVELY COUPLED PLASMA ATOMIC FLUORESCENCE SPECTROMETER

Donald R. Demers, Nashua, N.H., and Charley D. Allemand, Newton, Mass., assignors to Baird Corporation, Bedford, Mass.

Filed May 22, 1980, Ser. No. 152,387

Int. Cl.³ G01N *21/64, 21/73*

U.S. Cl. 356—316 **11 Claims**

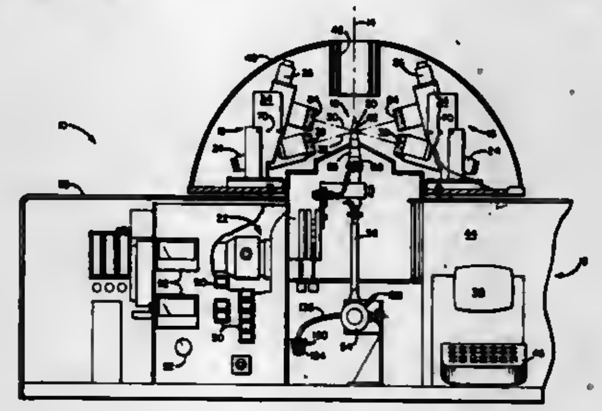

1. A fluorescence spectrometer for multielement analysis of samples comprising:

(a) a source for atomizing a dispersed sample directed along a central axis;

(b) a plurality of energizing illuminators radially mounted about said source for irradiating said atomized sample in said source;

(c) a plurality of fluorescence detectors also radially mounted about said source for detecting fluorescent emission from said irradiated atomized sample in said source;

(d) said illuminators and said detectors arranged in pairs, with each of said pairs viewing a region of said source common to one specific illuminator and one specific detector, each of said detectors including means matched to the characteristic radiation of said corresponding illuminator in said pair, with the height of said common region in said source being adjustable along the axial length of said source for each said pair of illuminators and detectors; and

(e) a readout system coupled to said plurality of detectors including a multiplexer and means for intermittent modulation of said energizing illuminators.

4,300,835

ATTENUATOR FOR STRAY LIGHT PRODUCED IN MONOCHROMATORS

Dieter Schiemann, and Wolfgang Witte, both of Uberlingen, Fed. Rep. of Germany, assignors to Bodenseewerk Perkin-Elmer & Co., GmbH, Uberlingen, Fed. Rep. of Germany

Filed May 2, 1980, Ser. No. 146,728

Claims priority, application Fed. Rep. of Germany, Jun. 15, 1979, 2924125

Int. Cl.³ G01J *3/18*

U.S. Cl. 356—334 **2 Claims**

1. Attenuating means for the virtual elimination of stray light produces within grating monochromators by the diffuse reflection of zero order radiation specularly reflected from the surface of the grating, said attenuating means including:

an absorbent-reflector positioned within the monochromator housing for intecepting the zero order radiation, said absorbent-reflector comprising a body of light beam radiation absorbent material having a highly reflective surface, said reflective surface being oriented for reflecting all

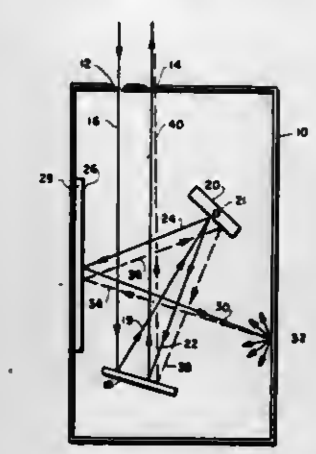

radiation not absorbed by said material to a diffuse reflector in said housing.

4,300,836

ELECTRO-OPTICAL SCANNING SYSTEM WITH SELF-ADAPTIVE SCANNING CAPABILITY

Holmes, Jones F., Portland, and Ralph L. Jacob, Aloha, both of Oreg., assignors to Oregon Graduate Center for Study and Research, Beaverton, Oreg.

Filed Oct. 22, 1979, Ser. No. 86,725

Int. Cl.³ G01B *11/24*

U.S. Cl. 356—376 **2 Claims**

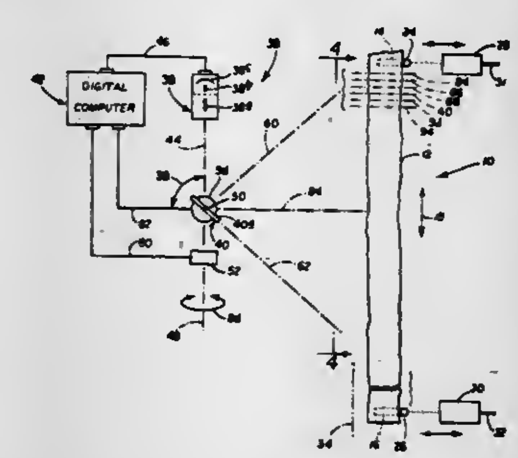

1. A three-dimensionally sensitive profiling system utilizing range data for scanning the near face of an elongate object which has an elongated feature whose lateral position may change along its long axis, said system comprising

a projection scanner having a defined projection scanning sweep capable of projecting along different angularly displaced projection axes a scanning beam which, within such a sweep, can impinge such an object at different points distributed on opposite sides of said axis,

a reception scanner having a defined reception scanning sweep, coordinated with said projection scanner for picking up along said different angularly displaced projection axes any reflection from such an object resulting from a projection scanner beam impingement with such an object, and

means operatively connected to said two scanners for controlling automatically the operations thereof, whereby successive coordinated projection and reception scanning sweeps are shifted along the length of said axis, with the successive central positions of such sweeps generally following said axis on the basis of range data developed in the sweeps.

4,300,837

DEVICE FOR THE PREPARATION OF COATED BITUMINOUS PRODUCTS FOR ROAD SURFACING

Pierre Malbrunot, Saint-Cloud, France, assignor to Creusot-Loire, Paris, France

Filed Mar. 7, 1980, Ser. No. 127,970

Int. Cl.³ B28C *5/46, 5/20*

U.S. Cl. 366—25 **5 Claims**

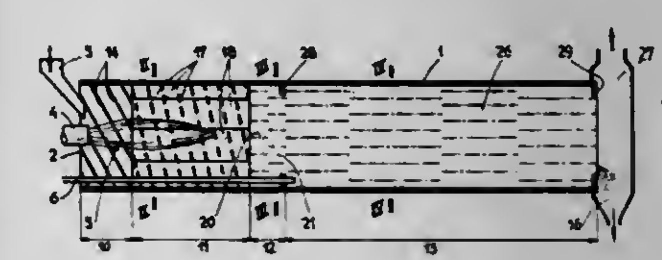

1. In a device for the preparation of coated bituminous products for road surfacing, starting from liquid bituminous binders and granular products consisting of recycled coated matter coming from worn road surfacing and of new aggregate, where the proportion of recycled coated matter with respect to the proportion of new aggregate may run from 0 to 100%, consisting of a drum of cylindrical form mounted to be able to rotate about its longitudinal axis on a platform and associated with means of driving it in rotation and with means of feeding it with granular products at one of the ends of the drum, called the products input end, and including a zone for introduction of the products brought by the feed means, following the input end, in which the drum includes spiral blades for rapid introduction of the products into the drum, a burner entering axially into the drum through the input end of the drum, a zone for mixing in a hot atmosphere, in which the drum includes lifter devices of high retention capacity for the raising of the products and their falling back across the whole cross-section of the drum, and at the entry to which a device opens out for bringing in liquid bituminous binder, and a fixed chamber for discharge of the coated products and for exhaust of the gases flowing in the drum in communication with the output end of the drum, this drum sloping from its input end down to its output end in order to ensure flow of the products, the improvement which comprises in addition between the introduction zone and the mixing zone in succession in the direction of flow of the products:

a zone for transfer and heating of the granular material, where the inner surface of the drum is fitted with sections of blades in the form of metal bands wound in spirals over the inner surface of the drum, and fixed on said inner surface along one of their two edges, the outer remote from the inner surface of the drum supporting baffle plates arranged along the direction longitudinal to the drum,

and an isolation and drying zone where the inner surface of the drum is fitted with lifter devices having a cross-section with concavity sufficient for lifting the granular material up to the upper portion of the drum during the course of its rotation and the formation by falling back of the materials of a continuous screen of material isolating the flame of the burner from the next zone of the drum.

4,300,838
MIXING AND KNEADING MACHINE
Norimoto Sato, Ogawahigashi; Minoru Miyaoka, Hachioji; Shin Yamazaki, Tokorozawa; Kimio Inoue; Akimasa Kuriyama, both of Kobe; Tsuguhi Fukui, Miki, and Toshihiro Asai, Kobe, all of Japan, assignors to Bridgestone Tire Co., Ltd., Tokyo and Kobe Steel, Ltd., Kobe, both of, Japan
Filed Jun. 22, 1979, Ser. No. 50,996
Claims priority, application Japan, Jan. 23, 1978, 53-76686; Jun. 23, 1978, 53-76688
Int. Cl.³ A21C *1/06;* **B01F** *7/04*
U.S. Cl. 366—84 **6 Claims**

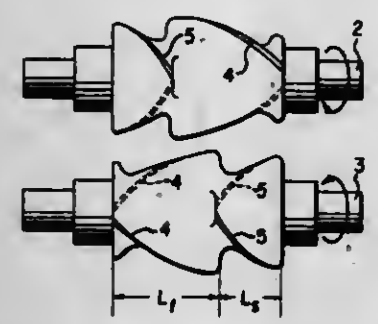

1. A mixing and kneading machine including a mixing chamber defined by a casing comprising:

a pair of parallel rotors disposed within said casing, each of said rotors having at least one long vane and at least one short vane both of which extend spirally about the center lines of each of the rotors and in the same direction of spiraling on each rotor such that flowing behavior of materials to be mixed and kneaded occur in opposing directions between each of said rotors and along the axis of each of said rotor; and

means connected to said rotors for rotating said rotors in opposite directions.

4,300,839
SELF-CLEANING TYPE EXTRUDER
Mamoru Sakagami, Ibaraki, Japan, assignor to Sekisui Kagaku Kogyo Kabushiki Kaisha, Osaka, Japan
PCT No. PCT/JP78/00028, § 371 Date Jul. 19, 1979, § 102(e) Date Jun. 28, 1979, PCT Pub. No. WO79/00305, PCT Pub. Date May 31, 1979
PCT Filed Nov. 16, 1978, Ser. No. 143,473
Claims priority, application Japan, Nov. 19, 1977, 52-139248
Int. Cl.³ B29B *1/10*
U.S. Cl. 366—85 **5 Claims**

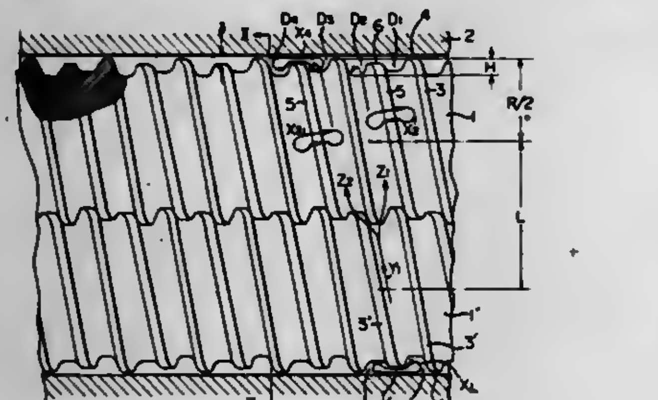

1. A self-cleaning type extruder comprising: a cylinder and at least two screws therein, the screw flights of which rotate in the same direction, said screws being in such a relation that at any position in at least a part of the screws which lies in the longitudinal direction of the extruder, the contour of one screw in a cylinder cross-section taken at right angles to the screw axes is in substantial contact at one point with the contour in the same cross-section of another screw intermeshing therewith, each of said screws having at least two screw flights, and the top of at least one of the screw flights being substantially in contact with the inner wall surface of the cylinder and the top of at least one other screw flight having the tip spaced at a predetermined constant clearance δ from the wall surface of the cylinder, said tip clearance δ being a value in the range according to the equation

$$R/100 \leq \delta \leq H/2$$

wherein R is the outside diameter of the screw determined by doubling the maximum vertical distance from the top of the screw flight to the central axis of the screw, and H is the depth of a screw channel defined by R-L in which L is the interaxial distance of the two intermeshing screws; and in the contour of one screw in the cross-section taken at right angles to the screw axes at any portion, the part of the contour formed by the top of one screw flight in substantial contact with the inner wall surface of the cylinder is an arc with the central axis of the screw as a center and a radius of R/2 and the part of the contour formed by the top of the other screw flight having the predetermined tip clearance δ with respect to the inner wall surface of the cylinder is an arc with the central axis of the screw as a center and a radius of R/2−δ; and the central axis of the screw corresponds with the axis of rotation of the screw.

4,300,840
KNEADER FOR COMPOUNDED RESIN
Yamaoka Kishihiro, 1-33-104, Nakamiyakita-machi, Hirakata-Shi, Osaka 573, Japan
PCT No. PCT/JP79/00047, § 371 Date Nov. 23, 1979, § 102(e) Date Nov. 16, 1979, PCT Pub. No. WO79/00816, PCT Pub. Date Oct. 18, 1979.
PCT Filed Feb. 27, 1979, Ser. No. 187,851
Claims priority, application Japan, Mar. 23, 1978, 53/33367
Int. Cl.³ B29B *1/06*
U.S. Cl. 366—88 **14 Claims**

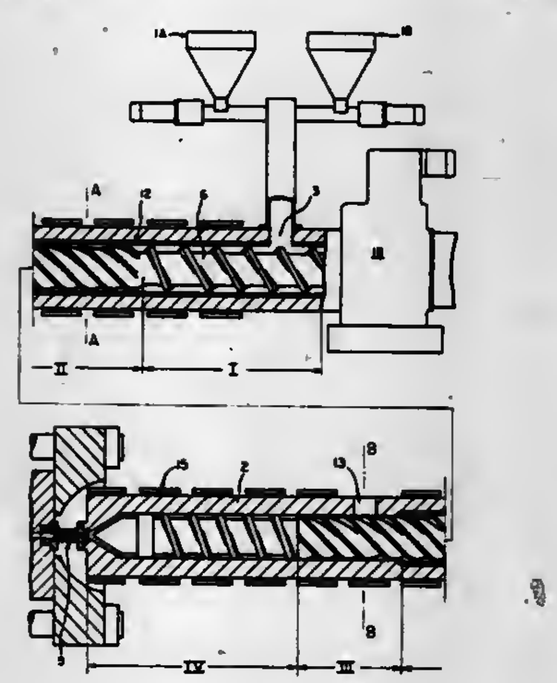

1. Apparatus for kneading compounded resinous material comprising:

a cylinder having a feed inlet communicating with one end thereof, the interior of said cylinder being subdivided sequentially from said inlet end into a preheating feed zone, a plasticizing kneading zone, a degassing zone and a measuring zone;

a screw rotatably positioned within said cylinder and extending through said zones, the portion of said screw within said plasticizing kneading zone comprising a plurality of continuous helical flights, each of said flights having a front wall facing in the direction of screw rotation substantially perpendicular thereto and a rear portion defining a groove with the next adjacent flight such that the diameter of the screw between flights progressively decreases in the direction opposite to screw rotation; and

a plurality of axially extending recesses formed along the interior surface of said cylinder and disposed parallel to the axis of said cylinder, said axially extending recesses extending at least through said preheating feed zone and plasticizing kneading zone.

4,300,841
PROCESSING OF SILICONE POLYMERS
James F. Richards, Portsmouth, N.H., assignor to Tredair Industries, Inc., Portsmouth, N.H.
Filed Apr. 4, 1980, Ser. No. 137,392
Int. Cl.³ B01F *7/02*
U.S. Cl. 366—98 **5 Claims**

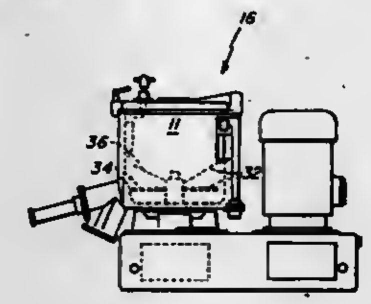

1. The method of compounding silicone polymers with fillers comprising:

introducing the filler and random pieces of unreinforced silicone polymers into a mixing chamber;

impacting the filler and silicone polymer with a high speed mixer blade at a first speed until the silicone polymer is reduced to relatively small and uniform particles;

subsequently operating the mixer blade at a higher speed in the order of twice the lower speed to drive the filler into the silicone polymer without kneading of the material.

4,300,842
SEALS FOR ROTARY PROCESSOR
Peter Hold, Milford, Conn., and Zehev Tadmor, Teaneck, N.J., assignors to USM Corporation, Farmington, Conn.
Continuation of Ser. No. 965,388, Dec. 1, 1978, abandoned. This application Jul. 31, 1980, Ser. No. 173,998
Int. Cl.³ B01F *7/10*
U.S. Cl. 366—99 **20 Claims**

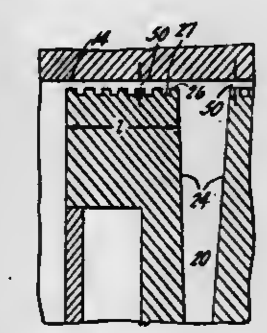

1. Apparatus for processing materials which comprises:

a rotatable element having a surface carrying at least one processing channel including opposed channel side walls;

a stationary element providing a coaxial surface spaced apart from said surface of the rotatable element by a close clearance and cooperatively arranged with the processing channel to form an enclosed annular processing passage; said stationary element also having associated with it an inlet for feeding material to the passage, an outlet spaced apart from the inlet for discharging material from the passage and a member located in the channel providing a surface for restraining movement of the main body of material in the passage so that on rotation of said rotatable element in a direction from the inlet toward the material restraining surface, the rotatable element and the restraining surface providing member coact so that material in contact with the channel side walls is dragged toward the restraining surface and pressure increases along the length of travel of the channel side walls from the inlet towards the restraining surface and,

dynamic sealing means for preventing leakage of the pressurized material past said clearance including a plurality of helical sealing channels carried by one of said surfaces, arranged so that said liquid material can penetrate said sealing channels, the width of said one surface, the number, angle and geometry of said sealing channels being selected so that the outward penetration of said clearance and said sealing channels by the pressurized liquid is opposed by the inward force applied to the liquid in the sealing channels as the surfaces are relatively rotated to resist the extent of outward penetration of pressurized liquid in any of said sealing channels.

4,300,843
STREAMING VIBRATOR WITH AN UNINTERRUPTED ROLLING AREA AND AN UNLOADED BLADE
Esref Halilovic, D. Tucovica 141, and Branko Radisic, Lole Ribara 2, both of Belgrade 11000, Yugoslavia
Continuation of Ser. No. 969,498, Dec. 14, 1978, abandoned. This application May 23, 1980, Ser. No. 152,839
Claims priority, application Yugoslavia, Dec. 15, 1977, 2976/77
Int. Cl.³ B01F *11/00*
U.S. Cl. 366—125 **4 Claims**

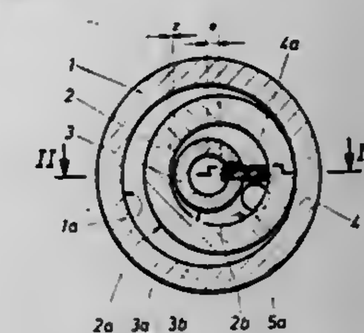

1. Streaming vibrator with an uninterrupted rolling area and an unloaded blade, comprising a housing (1) with a cylindrical cavity, end plates (5) laterally limiting the cavity, the cavity defining an uninterrupted cylindrical rolling area (*1a*), a central pipe (3) for introducing a compressed fluid into said cavity and having a periphery (*3b*) coaxial with and spaced from the rolling area of the housing (1), an unloaded blade (4) extending through an opening in the pipe into the cavity, and a free scutching member (2) formed as a hollow cylinder positioned in the space between the central pipe (3) and the rolling area (*1a*) of the housing, the scutching member having an outer surface defining a second rolling area (*2a*) supported by the rolling area (*1a*) of the housing and an inner surface defining a friction area (*2b*) facing the periphery (*3b*) of the central pipe, a radial clearance (*z*) being formed between the periphery (*3b*) of the central pipe and the friction area (*2b*) of the scutching member when the second rolling area (*2a*) is supported by rolling area (*1a*), said unloaded blade (4) having a sufficient radial length to extend into contact with the friction area (*2b*) in all positions of the scutching member (2), and at least one of said channels (*4a*) extending radially from an inner surface to an outer surface of said blade so that fluid flows from said pipe, through said at least one channel, into a region between said blade and said scutching member to thereby oppose fluid forces acting on the end of said blade positioned in said pipe to thereby unload said pipe.

4,300,844
MOVING HEAD PRINTER MECHANISM
Ronald W. Keil, Corvallis, Oreg., assignor to Hewlett-Packard Company, Palo Alto, Calif.
Filed Aug. 22, 1979, Ser. No. 68,809
Int. Cl.³ B41J *3/04;* **H05B** *1/100*
U.S. Cl. 400—120 **3 Claims**

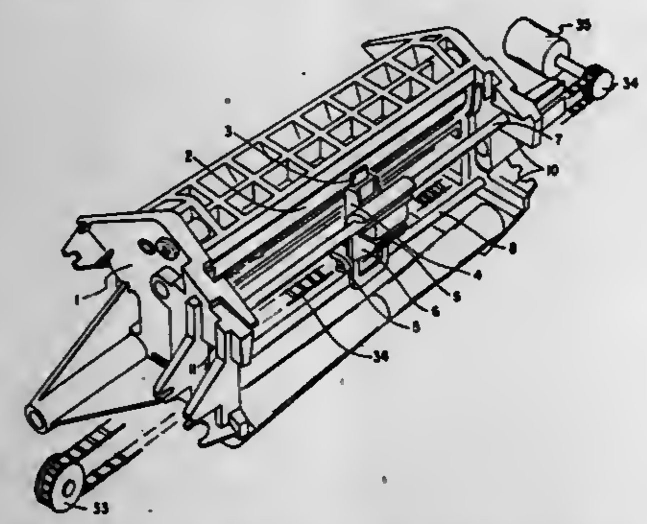

1. Apparatus for moving a recording element across a recording medium, the apparatus comprising:
a frame including a printing surface for supporting a recording medium;
a first cross slide spaced a constant distance away from the printing surface and supported by the frame;
a second cross slide parallel to the first cross slide and supported by the frame;
a carrier including first and second follower means, the first follower means for engaging the first cross slide to guide transverse carrier motion therealong when urged thereagainst, the second follower means for supporting the carrier against the second cross slide when urged thereagainst, neither of the first and second follower means enclosing their respective cross slides;
an arm pivotally connected to the carrier, pivotable against the printing surface and including a recording element for contacting the recording medium; and
biasing means mounted between the arm and the carrier for both biasing the arm against the printing surface and urging the carrier to rotate about the pivotal connection, the rotation urging the first follower means against the first cross slide and urging the second follower means against the second cross slide, whereby the bias means engages the carrier with the first and second cross slides for transverse motion therealong while also biasing the recording element against the printing surface.

4,300,845
DOT MATRIX PRINT HEAD
Donald P. Martin, Wheeling; Robert C. Hoffman, Park Ridge, and Richard H. Kruse, Deerfield, all of Ill., assignors to Qwint Systems, Inc., Northbrook, Ill.
Filed May 14, 1979, Ser. No. 38,923
Int. Cl.³ B41J *3/12*
U.S. Cl. 400—124 **25 Claims**

1. A print head for printing on a print-receiving surface a matrix of dots within a predetermined character-forming array, comprising, in combination:
a housing;
a plurality of elongated, parallel-spaced print elements aligned with respective positions in said matrix, each of said print elements being slidably mounted in said housing and longitudinally displaceable to bring one end thereof into engagement with the print receiving surface;
restoration means for biasing said print elements to retract positions clear of the print-receiving surface;
a plurality of identical substantially flat one-piece magnetically conductive end plates arranged generally perpendicular to said print elements in parallel-spaced relationship substantially one behind the other, each of said end plates including an aperture for receiving at least a portion of said print elements therethrough;
actuator means including a plurality of solenoid windings disposed between respective adjacent pairs of said end plates for selectively producing a magnetic field between said adjacent pairs of end plates;
means including a plurality of magnetic armatures mechani-

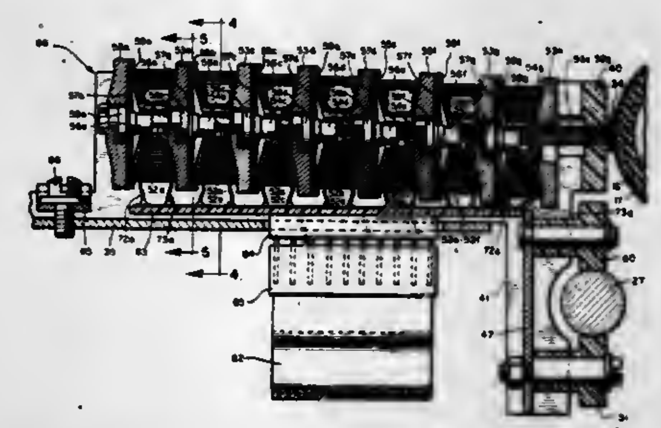

cally coupled to respective ones of said print elements between respective pairs of said end plates and responsive to the magnetic field therebetween for displacing respective ones of said print elements into engagement with the print-receiving surface; and
a plurality of non-magnetically-conductive bobbins disposed between said adjacent pairs of said end plates, each of said bobbins including a core portion for receiving said solenoid winding, and an axially extending aperture therethrough for receiving at least a portion of the associated one of said magnetic armatures therein.

4,300,846
HIGH SPEED PRINT HEAD SYSTEM AND METHOD
Stanley E. Rose, and Robert G. Fulks, both of Phoenix, Ariz., assignors to Genrad, Inc., Concord, Mass.
Filed Dec. 28, 1979, Ser. No. 108,237
Int. Cl.³ B41J *3/12*
U.S. Cl. 400—124 **19 Claims**

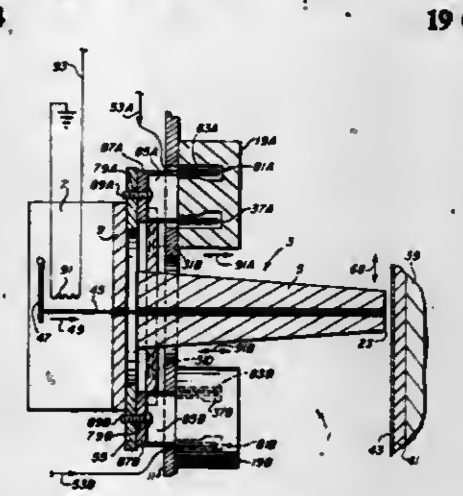

1. A printing apparatus comprising in combination:
a. a paper support means for supporting a piece of paper;
b. mark producing means movable against said paper or a mark producing ribbon for producing a mark on said paper, said mark producing means having a portion adjacent to said paper;
c. first means for moving said mark producing means against the paper or ribbon to produce a mark covering a first area of said paper;
d. a frame element;
e. resilient means for pivotally supporting and coupling said mark producing means to said frame element to allow said

portion of said mark producing means to move with 2 degrees of freedom in any direction that is substantially parallel to said first area of said paper, said resilient means including a flexible plate member having first, second and third spaced points, said first point of said flexible plate member being attached to said frame element, said second and third points of said flexible plate member being connected to said mark producing means;
f. first and second force producing means for producing first and second forces between said frame element and said resilient means, said first and second forces being applied at said first and second points of said, flexible plate member, said first and second forces and said resilient means cooperating to urge said mark producing means to move in a predetermined direction with respect to the paper, the distance and direction through which said mark producing means moves with respect to said paper being substantially continuously variable.

4,300,847
TELEPRINTER HAVING SINGLE BELT CARRIAGE AND RIBBON DRIVE SYSTEM
Robert C. Hoffman, Park Ridge; Richard H. Kruse, Deerfield, and Donald P. Martin, Wheeling, all of Ill., assignors to Qwint Systems, Inc., Northbrook, Ill.
Filed May 14, 1979, Ser. No. 38,942
Int. Cl.³ B41J *33/10*
U.S. Cl. 400—196.1 **12 Claims**

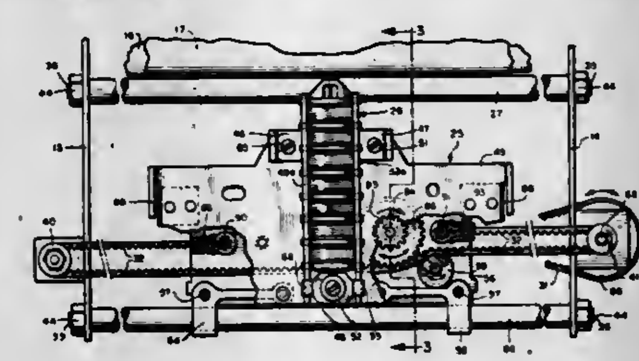

1. A teleprinter for printing data on a print-receiving surface, comprising, in combination:
a housing;
a print head;
means including a carriage slidably mounted within said housing for supporting said print head in generally perpendicular alignment to said print-receiving surface, said carriage being constrained to slide along a predetermined operating path parallel-spaced from said print receiving surface;
carriage drive means comprising first and second pulleys arranged at either end of said carriage operating path in a common plane generally parallel to said operating path;
a flexible carriage drive belt passing over said pulleys and forming therebetween a first span and a second span, said belt being fixedly engaged to said carriage along said first span thereof;
means for rotatably driving at least one of said pulleys whereby said carriage is moved along said operating path with movement of said carriage drive belt over said pulleys;
means including an ink ribbon carried on said carriage and positioned between said print head and said print-receiving surface for producing in cooperation with said print head a visible image on said print-receiving surface, said ribbon requiring periodic advancement upon operation of said print head to avoid depletion of the ink contained thereon; and
ribbon drive means carried on said carriage for mechanically engaging said second span of said carriage drive belt intermediate said first and second pulleys to advance said ink ribbon during movement of said carriage along said operating path.

4,300,848
BINDER FOR PAPER SHEETS WITH PRE-FORMED HOLES
C. Peter Waegemann, 392 Jerusalem Rd., Cohasset, Mass. 02025
Filed Jun. 25, 1979, Ser. No. 51,962
Int. Cl.³ B42F *13/02, 13/10*
U.S. Cl. 402—13 **13 Claims**

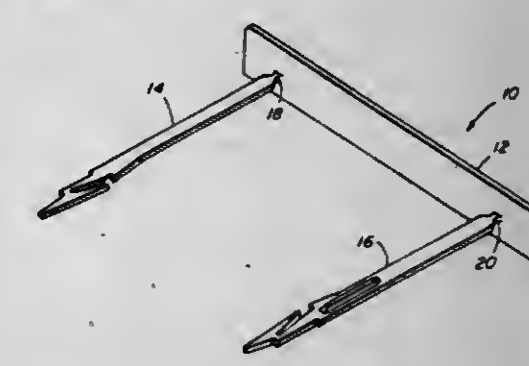

1. A device for binding a stack of paper sheets in which the stack is formed with at least two spaced holes therethrough, comprising
(a) a cross-piece,
(b) at least a pair of semi-flexible foldable stems extending from one face of said cross-piece,
(c) said stems when folded into an open position with said stems generally parallel to one another and perpendicular to said cross-piece are spaced apart from one another by a distance substantially equal to the distance between holes in a stack of paper sheets,
(d) said stems when parallel and perpendicular to said cross-piece adapted to be threaded through holes in a stack of paper sheets and each stem having a length sufficient to overlap an adjacent stem when both stems are folded into a closed position against the top of a stack of paper sheets parallel to said cross-piece,
(e) each of said stems being formed along the length thereof with cooperating locking means for locking engagement between adjacent stems when folded one against the other,
(f) each of said stems being formed also with integral retractable stop means at the distal end thereof for resulting separation of sheets from said stack.

4,300,849
BALL JOINT REPAIR PART
Roger J. Henry, Dayton, Ohio, assignor to Don Kremer Lincoln-Mercury, Inc., Dayton, Ohio
Filed May 18, 1981, Ser. No. 264,877
Int. Cl.³ B25G *3/00;* **F16D** *1/00;* **F16G** *11/00*
U.S. Cl. 403—11 **2 Claims**

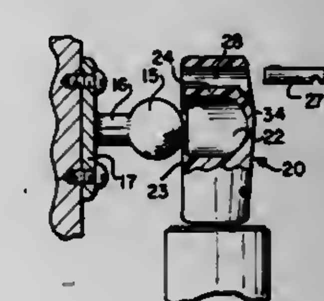

1. In combination with a ball joint having a plastic socket part, including a generally hemi-spherical socket cavity having an opening extending outward through one side of said socket part,

a ball member seated in said cavity and including a shank extending from said ball member through said opening, said shank being substantially smaller in cross-section than the largest cross-section of said ball member,
said socket part having a back and including a movable wall part defining part of said cavity and engaged with said ball member to retain said ball member in said cavity;
the improvement comprising a sleeve of rigid material open at least at one end and having a flattened section extending from said one end toward the middle of said sleeve,
means defining a slot extending lengthwise of said flattened section and terminating adjacent the middle of said sleeve, said slot opening into said one end of said sleeve,
said slot being of greater width than said shank and of less width than said ball member,
said sleeve being dimensioned to embrace substantially all of said socket part and said ball member seated in said cavity, and said shank being received in said slot to reinforce the retaining action of said socket part and to prevent release of said ball member from said cavity,
and a retainer means extending transversely inward of said sleeve toward said closed end of said slot and being adjustable toward and away from said slot to engage with said back of said socket part,
whereby said sleeve can be attached to the assembled ball joint by moving said sleeve lengthwise over said socket part, engaging said shank in said slot, and moving said retainer means against said back of said socket part to hold said sleeve on the assembled joint.

4,300,850
JOINING
Robert de la Haye, Harpenden; John A Matthews, Clifton; Malcolm J. Potton, Ampthill, and Steven P. Cook, Arlesey, all of England, assignors to Cidinge Limited, London, England
Filed Jun. 21, 1979, Ser. No. 50,948
Claims priority, application United Kingdom, Jun. 22, 1978, 27684/78
Int. Cl.³ F16B *21/02*
U.S. Cl. 403—245 **9 Claims**

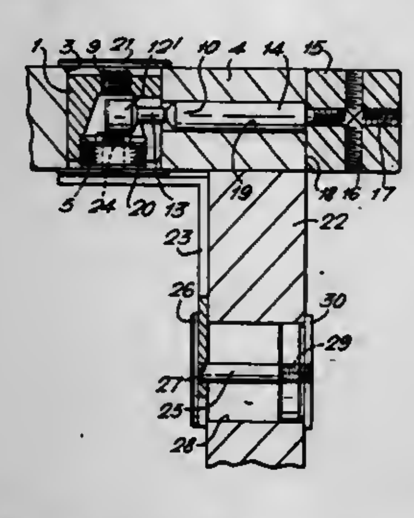

1. Coupling means, comprising:
a generally cylindrical hollow body member adapted for axial sliding reception in a corresponding cylindrical bore of a structural member, the body member having an internal surface defining an internal cavity of said body member, an axial end face in which is defined a threaded opening which communicates with and terminates at said internal cavity and a cylindrical side wall in which is formed a through bore slot communicating with said cavity, said slot extending to said axial end face and to said threaded opening;
an elongate headed member having a shank portion of diameter substantially less than the head of the headed member which shank portion is receivable in said slot with the head of said elongate headed member retained within said cavity beyond said slot;
and a threaded member receivable in said threaded opening and adapted to bear against the head of said headed member the interior of said cavity being so shaped that axial threaded tightening insertion of said threaded member in said opening is arranged to draw the shank of said headed member further through said slot into the interior of the cavity.

4,300,851
DEVICE FOR RELEASABLY CONNECTING A FURNITURE LEG WITH A PIECE OF FURNITURE, FOR EXAMPLE A TABLE
Henry Thelander, Varnamo, Sweden
Filed Jun. 20, 1979, Ser. No. 50,238
Int. Cl.³ F16M *11/16*
U.S. Cl. 403—319 **5 Claims**

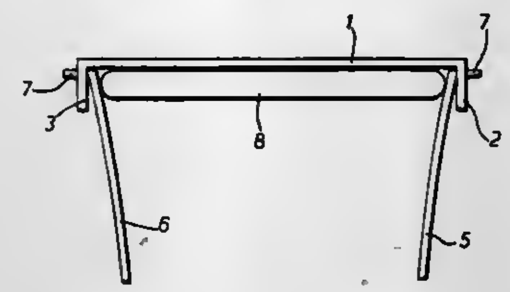

1. A device for releasably connecting a furniture leg with a piece of furniture, wherein the furniture is provided with connection means adapted for engaging complementary connection means in the leg, said furniture connection means comprising a fitting having two groups of openings provided in shanks depending from the lowest side of the piece of furniture, said openings being adapted to receive lugs which are substantially parallel with the lower side of the piece of furniture, the connection means of the leg being provided on upper displaceable shank portions of the leg, and being lugs which are substantially parallel to the lower side of the piece of furniture, and wherein said displaceable shank portions of the leg are displaceable from each other under the influence of a disk-shaped locking element which is adapted to displace said portions of the leg from a position wherein said connection means are out of engagement or incompletely in engagement with each other to a locked position wherein the connection means are in complete engagement with each other and a leg is connected with the piece of furniture, said disk-shaped locking element being adapted to be introduced between the shanks of the leg for forcing the legs from each other, and taking a locking position parallel to the lower side of the piece of furniture.

4,300,852
UNDERWATER STRUCTURAL JOINTS
Peter J. Clark, Purley, England, assignor to The Secretary of State for Energy in Her Britannic Majesty's Government of the United Kingdom of Great Britain and Northern Ireland, London, England
Filed May 22, 1979, Ser. No. 41,428
Claims priority, application United Kingdom, May 23, 1978, 21703/78
Int. Cl.³ B25G *3/36*
U.S. Cl. 403—385 **8 Claims**

1. A joint for joining first and second tubular members in a noncoaxial relation, comprising first and second connection members securable respectively to the first and second tubular members to define a central common plane through the joint and the first and second tubular members, each connection member including two spaced apart arrangements of finger-plates extending laterally of its respective tubular member, the arrangements being situated on opposite sides of and substantially parallel with the central common plane, each arrangement of one of the connection members being adapted to co-operate with a respective arrangement of the other connection member to form a respective connection between the said tubular members.

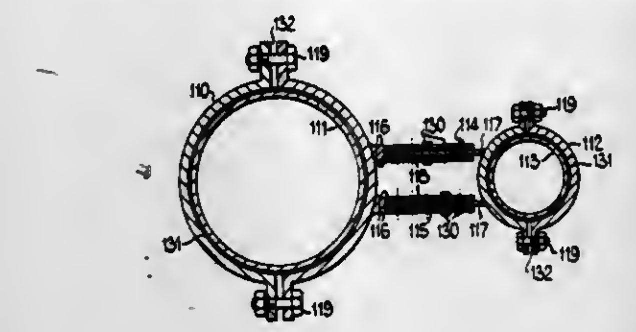

4,300,853
PLASTICIZER MIXER AND METHOD
George M. Jones, Salt Lake City, Utah, assignor to James A. Jackson, Sr., Little Rock, Ark.
Filed Mar. 17, 1977, Ser. No. 778,337
Int. Cl.³ E01C *23/12*
U.S. Cl. 404—92 **3 Claims**

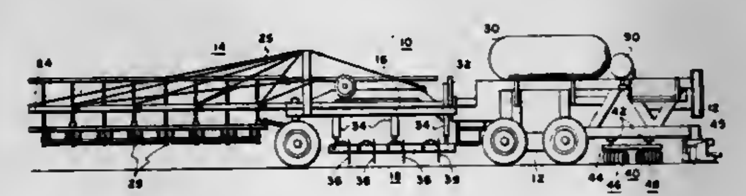

1. A road surfacing machine comprising, in combination
a chassis frame having front and rear sets of wheels;
a burner assembly suspended in front of said chassis frame at a predetermined distance above the road surface for heating a plurality of spaced strips along the surface transverse to the road whereby the surface is heated and softened to a predetermined depth while maintaining the heated surface layer below a predetermined temperature by moving the machine along the road surface;
a scarifier assembly adjustably attached beneath the chassis frame behind the burner assembly for raking the heated and softened road surface to substantially the predetermined depth;
a plurality of beams secured to the chassis frame in spaced relation and parallel to the line of travel of the frame as it is carried along the road surface;
a plurality of disc assemblies for lifting and turning portions of the scarified road surface material, each including a yoke, a shaft journalled for rotation on the yoke, and a plurality of discs secured to the shaft, each yoke being mechanically coupled to one of said beams for angular movement with respect to the longitudinal axis of the beam thereby permitting each disc assembly to rotate about its longitudinal axis and also to move angularly with respect to the axis of the beam to which it is attached in response to variations in the elevation of the road surface engaged by the disc assembly; and,
a spray nozzle suspended beneath the chassis and near each disc assembly, the nozzle being aimed to spray a liquid plasticizing agent over exposed surfaces of the scarified road surface material as it is lifted and turned by the disc assemblies, whereby the liquid plasticizing agent is coated substantially uniformly over the exposed surfaces of the scarified road surface material throughout the heated layer.

4,300,854
MOVABLE FLOAT SYSTEM FOR BOAT LAUNCHING RAMPS
Wesley W. Sluys, Bellingham, Wash., assignor to Builders Concrete, Inc., Bellingham, Wash.
Filed Apr. 1, 1980, Ser. No. 136,308
Int. Cl.³ B63C *3/00*
U.S. Cl. 405—1 **13 Claims**

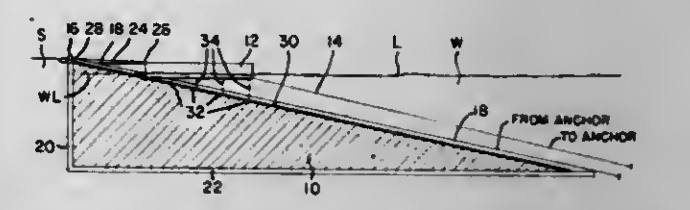

1. A movable float system for a boat launching ramp extending into a body of water, comprising:
an elongated float having its longitudinal axis extending along the incline of said ramp;
sheave means positioned adjacent a continuously underwater portion of said ramp;
powered drive means adapted for selectively driving a line in either direction responsive to a control signal;
a line extending from one end of said float to engage said sheave means, from said sheave means to engage said drive means and from said drive means to other end of said float such that actuation of said drive means moves said float along the incline of said ramp; and
water level sensing means for generating said control signal responsive to variations in water level so that said float remains on the surface of said water adjacent the water line of said ramp.

4,300,855
ROTATABLE ICE-FORMATION-PREVENTING DEVICE
Kenneth Watson, 227 Scott Dr., Annapolis, Md. 21401
Filed Mar. 13, 1980, Ser. No. 130,009
Int. Cl.³ E02B *15/02*
U.S. Cl. 405—61 **21 Claims**

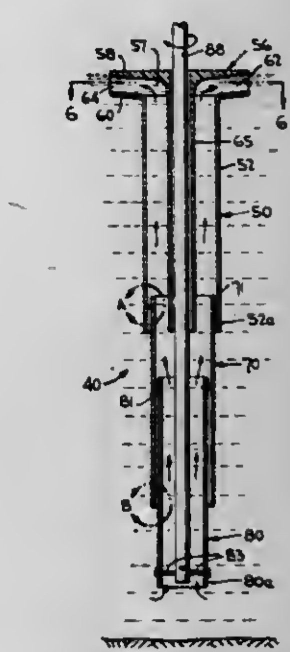

1. A rotatable ice-formation-preventing device which is positionable just below the surface of a body of water exposed to cold air thereabove, said device comprising a cylindrical member having an elongated lower portion and an enlarged head portion, said elongated lower portion being hollowed out so as to have a tubular configuration with an internal flow passageway therein, and said enlarged head portion being partially hollowed out so as to have an internal flow area therein in communication with said internal flow passage; said enlarged head portion also including a generally disk-shaped

cap member on the top side thereof so as to enclose said internal flow area, and at least two equally angularly spaced apart radially-extending channels in the outer peripheral portion thereof, said channels allowing for fluid communication between said interior flow area and the exterior of said enlarged head portion; said device when submerged just below the surface of a body of water and rotated by a shaft attached to the center of said cap member of said enlarged head portion, acting to centrifugally eject water from said interior flow area through said channels to externally of said enlarged head portion and concurrently sucking subsurface water upwardly through said interior flow passageway to said interior flow area so as to create a continuous flow of warmer subsurface water to mix with the colder water at the surface.

4,300,856

COMPACTABLE, FOLDABLE, FLOATABLE, BOOM-FENCE TO QUICKLY CONTROL THE SPREAD OF CONTAMINATES OVER WATER SURFACES

Richard E. Magoon, 1337 Regents Blvd., Apt. C, and Lester E. Magoon, 8545 27th St. West, both of Tacoma, Wash. 98466

Filed Oct. 9, 1979, Ser. No. 82,776

Int. Cl.³ E02B *15/04*

U.S. Cl. 405—66 **17 Claims**

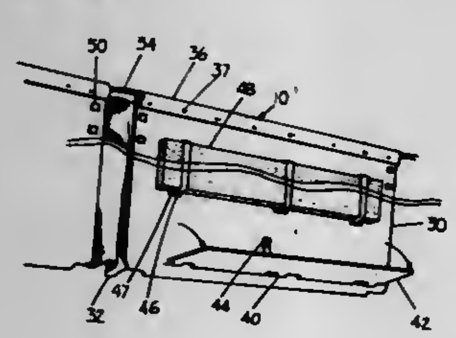

1. A compactable, foldable, floatable, continuous boom-fence quickly deployable to control the spreading of contaminates over water surfaces, comprising multiple planar fence panels; each multiple planar fence panel having a top portion formed about and attached to a continuous cable extending throughout all fence panels and between all adjacent planar fence panels, each multiple planar fence panel having a slotted bottom portion with the slots staggered horizontally to accept projections of dampening fins located on each side, each multiple planar fence panel having dampening fins with their projections inserted through the slots of the bottom portion and then their outer portions of the inserted projections are twisted to a right angle thus creating a limited hinging action, whereby the dampening fins are either folded parallel to the planar fence panel for compactness or are deployed to their approximate right angle position, and each dampening fin is notched to allow clearance for the twisted outer portions of the inserted projections of the opposite dampening fin, each multiple planar fence panel having positioners consisting of stiffleg springs, which deploy and lock into position upon the full opening of the dampening fins, keeping the dampening fins hinged at right angles on both sides of each planar fence panel, and the opening of the dampening fins is accomplished by action in the water or by gravity and thereafter the stiffleg springs maintain the fins in an open position on both sides of each planar fence panel, each multiple planar fence panel having an upper middle portion having in turn planar floats consisting of a foamed material of a density of approximately four pounds per cubic foot and of a sufficient volume to provide adequate buoyancy to support the wetted weight of the entire planar fence panel and to provide freeboard of approximately ⅓ of the height of the panel to extend above the mean water line by ⅓ of the volume of the float and be equally distributed from end to end, such additional buoyancy complements the functioning of the dampening fins; and each multiple planar fence panel having flexible couplings extending to adjacent planar fence panels consisting of woven fiberglass cloth impregnated with fortified silicone rubber.

4,300,857

MARINE BARRIER

Joseph P. Santamaria, Westwood, Mass., assignor to Oiltrol, Inc., Dedham, Mass.

Filed Apr. 24, 1980, Ser. No. 143,465

Int. Cl.³ E02B *15/04*

U.S. Cl. 405—70 **9 Claims**

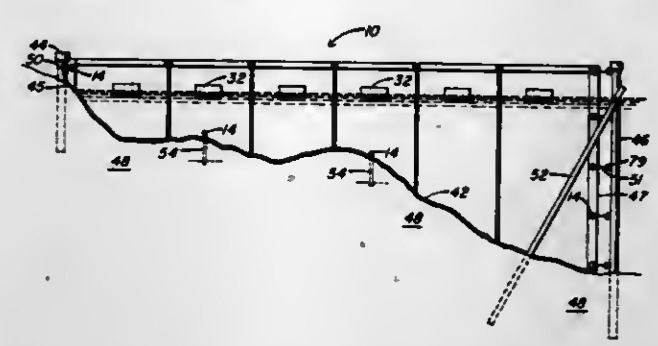

1. A system for diverting the flow of water through a water course having a flow direction therethrough and having a first bank and a second bank disposed generally transversely of the flow direction, comprising:

a plurality of parallel impermeable flexible curtain barriers disposed transversely of said flow direction, said barriers being alternately spaced from said first bank and extending to said second bank, and being spaced from said second bank and extending to said first bank to form a baffle configuration;

means for anchoring a lower edge of each of said barriers to the bottom of said water course;

means for anchoring a first end of each of said barriers to a selected one of said first bank and said second bank;

means for selectively anchoring a second end of each of said barriers to the bottom of said water course at a point spaced selectively from said first bank and said second bank; and

means for maintaining an upper longitudinal edge of each of said barriers above the water level of said water course.

4,300,858

VARIABLE DAM

Howard C. Zintz, and Walter A. Zintz, both of 260 Marshall Dr., Walnut Creek, Calif. 94598

Filed Apr. 22, 1980, Ser. No. 142,760

Int. Cl.³ E02B *7/40*

U.S. Cl. 405—100 **9 Claims**

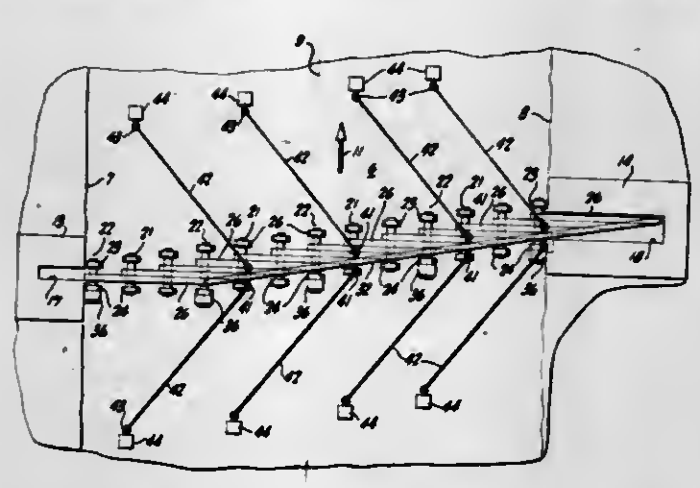

1. A variable dam for a longitudinal water channel comprising a frame including a bottom member extending approximately transversely of said channel and including upright members at the ends of said bottom member; a plurality of elongated, planar panels each having a corner; a pivot pin having a longitudinal and horizontal axis interconnecting said corner of each of said panels for rotation relative to said bottom member with said panel in a relationship having an overlap with adjacent ones of said panels; each of said pivot pins being parallel to others of said pivot pins and having a longitudinal offset relative to other pivot pins comparable to said overlap; and means for swinging said panels on said pivot pin axes between substantially horizontal and vertical positions.

4,300,859

DUAL DIAMETER BUSHING/SEAL FOR MINE ROOF BOLT

David C. Donan, Jr., Manitou, Ky., assignor to Waiamea Company, Inc., Manitou, Ky.

Filed Sep. 29, 1980, Ser. No. 192,061

Int. Cl.³ E21D *20/00, 21/00*

U.S. Cl. 405—259 **14 Claims**

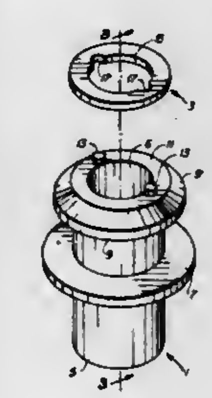

1. A bushing seal assembly for a mine roof bolt, said bushing seal assembly comprising in combination:

a. a tubular body, said tubular body having an upper end and a lower end and also having a hole extending from the upper end to the lower end for receiving the shaft of a mine roof bolt, said mine roof bolt extending through said hole;

b. seal means connected to said flexible body for producing an airtight seal between a shaft of said roof bolt and said flexible body;

c. flexible upper skirt means connected to said flexible body around the outside surface of said flexible body for sealably engaging an interior wall of a first mine roof bolt having a first diameter to prevent entry of moist mine air from a mine tunnel into a portion of the first mine roof bolt hole located on the opposite side of said bushing seal assembly from said mine tunnel;

d. flexible lower skirt means connected to said upper skirt means for sealably engaging an interior wall of a second mine roof bolt hole having a second diameter which is different than said first diameter to prevent entry of moist mine air from the mine tunnel into a portion of said second mine roof bolt hole located on the opposite side of said bushing seal assembly from said mine tunnel; and

e. rigid stabilizing means disposed around said shaft of said mine roof bolt for engaging the wall of one of said first and second mine roof bolt holes in which said bushing seal assembly is to be installed to prevent said roof bolt shaft from moving close enough to said wall to prevent said first skirt and said second skirt from sealably engaging the wall of said one of said first and said second mine roof bolt holes.

4,300,860

METHOD OF TREATING A SUBTERRANEAN FORMATION TO REMOVE AMMONIUM IONS

Tsoung-Yuan Yan, Philadelphia, Pa., assignor to Mobil Oil Corporation, New York, N.Y.

Filed Jul. 25, 1980, Ser. No. 176,471

Int. Cl.³ C09K *17/00;* E21B *43/22*

U.S. Cl. 405—263 **4 Claims**

1. In the method of treating a subterranean clay-containing formation having ammonium ions absorbed on the clay, wherein the formation is flushed with a halogenated restoration fluid having a halogen therein which reacts with the ammonium ions in the formation to decompose the ammonium ions and wherein the barren ammonia-containing restoration fluid after it passes through the formation is withdrawn, reconstituted and recycled as fresh halogenated restoration fluid into the formation,

the improvement comprising the further steps of:

(a) treating the barren fluid with an appropriate base to raise the pH to a highly alkaline level,

(b) passing the treated highly alkaline barren fluid through an airstripping tower to strip substantially all the ammonia from said fluid,

(c) adding chlorine gas to the fluid from which the ammonia has been stripped, controlling the amount of chlorine to produce a reconstituted restoration fluid of predetermined pH level, and

(d) recycling the reconstituted restoration fluid into the formation.

4,300,861

METHOD OF USING ADMIXTURE OF WATER-SOLUBLE POLYMERS IN LATEX FORM AND GYPSUM AS SEEPAGE CONTROL AGENTS

Joseph F. Vartiak, Naperville, Ill., assignor to Nalco Chemical Company, Oak Brook, Ill.

Filed Jun. 23, 1980, Ser. No. 161,961

Int. Cl.³ E02B *3/02*

U.S. Cl. 405—264 **8 Claims**

1. A method of sealing porous earthen surfaces which are in contact with ponded water comprising the addition of the following compositions:

Ingredients	% by Weight
1. Calcium sulfate	50–80
2. Water-in-Oil latex polymer containing 10–40% by weight anionic water-soluble polymer	5–20
3. Water	Balance

to water in contact with such surfaces.

4,300,862

END MILLING TOOL

Hiroshi Yada, Yamatokoriyama, Japan, assignor to Dijet Industrial Co., Ltd., Osaka, Japan

Filed Sep. 5, 1979, Ser. No. 72,757

Int. Cl.³ B26D *1/12*

U.S. Cl. 407—53 **4 Claims**

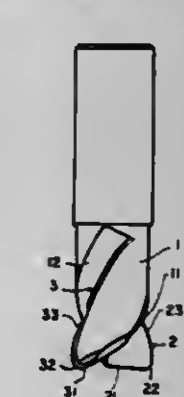

1. An end mill tool comprising:

a main body terminating in a forward end;

a main cutting end edge extending generally radially of said main body at said forward end from the outer periphery inwardly to approximately the axial center thereof;

a relatively shorter auxiliary cutting end edge extending generally radially of said main body at said forward end

from the outer periphery inwardly to a location spaced from the axial center thereof such that the outer radial portion of said main cutting end edge and the entire radial length of said auxiliary cutting end edge sweep a common overlapping outer radial path; and
outer peripheral cutting edges formed at the outer peripheral portion of said main body continuous with said main and auxiliary cutting end edges;
said main and auxiliary cutting end edges being constructed and arranged such that the entire radial length of said outer radial portion of said main cutting end edge which sweeps said common outer radial path projects axially forwardly of the entire radial length of said auxiliary cutting end edge such that said outer radial portion of said main cutting end edges cuts the workpiece to a greater depth than said auxiliary cutting end edge, whereby said auxiliary cutting end edge encounters less resistance and the likelihood of chipping or breaking of said auxiliary cutting end edge is reduced.

4,300,863
TOOL SUSPENSION SYSTEM
Joe C. Partain, 3070 Oakcliff Rd., Doraville, Ga. 30340
Continuation of Ser. No. 974,430, Dec. 29, 1978, abandoned. This application Aug. 21, 1980, Ser. No. 180,119
Int. Cl.³ B23C *1/16*
U.S. Cl. 409—109 2 Claims

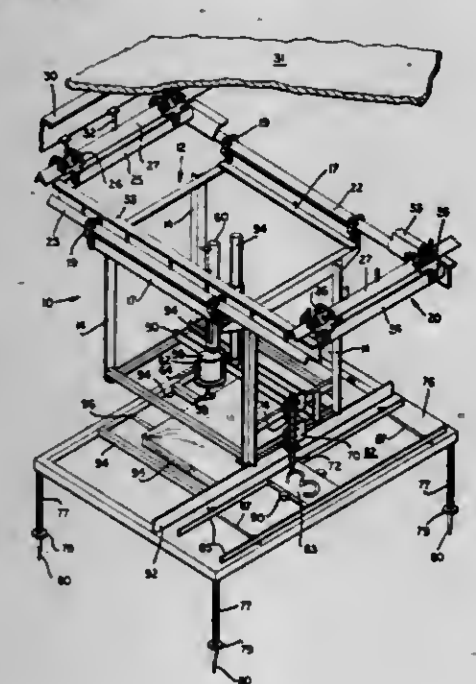

1. An apparatus for reproducing a pattern embodied in a flat template in a horizontal workpiece comprising:
a work table including means for securing said workpiece and means for securing said template in fixed relation to said workpiece;
a pair of longitudinal rails suspended from a ceiling member in spaced apart parallel relation;
a horizontally extending carriage suspension frame movably suspended below said longitudinal rails by a plurality of roller assemblies engaging said longitudinal rails;
a pair of transverse rails suspended below said carriage suspension frame in spaced apart, parallel relation at right angles to said longitudinal rails;
a carriage movably suspended below said transverse rails by a plurality of roller assemblies engaging said transverse rails, said transverse and longitudinal rails being sized to allow movement of said carriage transversely in either direction beyond said longitudinal rails and longitudinally in either direction for a distance greater than the distance between said transverse rails;
a stylus mounted adjacent to an edge of said carriage for selective vertical movement from a position above said template to a position engaging said template;
biasing means for urging said stylus toward said template;
catch means selectively engagable for holding said stylus above said template;
a tool mounted in a tool support, said tool support being mounted for sliding movement along a track extending horizontally away from said stylus and being fixedly mounted to said carriage;
means for selectively locking said tool support to said carriage to fix the distance between said tool and said stylus; and
means for selectively moving said tool with respect to said tool mount, independently of the vertical movement of said stylus, from a position above said workpiece to a position engaging said workpiece.

4,300,864
FREESTANDING HONEYCOMB LOAD SPACER
Henry L. Liebel, and Martin Krier, both of Cincinnati, Ohio, assignors to Angleboard Inc., Cincinnati, Ohio
Filed Dec. 5, 1979, Ser. No. 100,338
Int. Cl.³ B60P *7/16;* B61D *45/00;* B65G *1/14*
U.S. Cl. 410—154 10 Claims

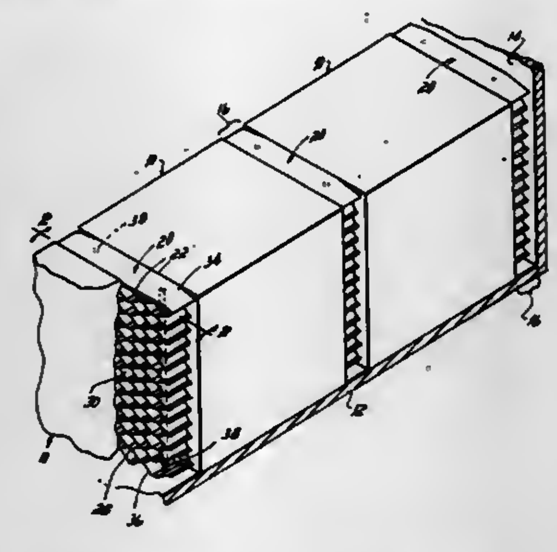

2. A load spacer adapted to be removably placed between the ends and sides of adjacent laterally spaced loads comprising:
an expandable-collapsible cellular structure including a stack of interconnected strips of rectangular sheet material defining a plurality of cells when expanded, said structure having a top strip, a bottom strip, generally planar sides and a plurality of openings in said sheet material axially aligned from top to bottom,
an elongated, substantially rigid support member extending through said openings from said top strip to said bottom strip of said structure, said rigid support member supporting said structure in a vertical direction in the expanded condition of said load spacer such that said structure is essentially freestanding between said loads.

4,300,865
BLIND CLIP FASTENER
Ronald A. Murray, Methuen, Mass., assignor to TRW Inc., Cleveland, Ohio
Filed Jul. 11, 1979, Ser. No. 56,575
Int. Cl.³ F16B *39/28;* H01R *4/56*
U.S. Cl. 411—15 6 Claims

1. A blind clip fastener comprising
A. an apertured head portion, and
B. a shank portion integral with and extending generally perpendicular to the head portion, said shank portion comprising a pair of mirror image sections extending from opposite side edges of the head portion, each shank section including
(1) a resilient leg, and
(2) a pair of wings integral with the free end of each leg and extending toward the head portion at opposite side edges of that leg, each wing having opposite side edges and a free end, the wings associated with one leg being bent about their boundaries with that leg toward the corresponding wings on the other leg so that said wings lie in a plane which is substantially perpendicular to a plane in which said associated leg lies, and the wings

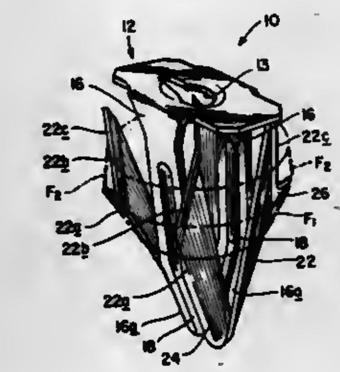

associated with each leg also being shaped so that their side edges closest to that leg are inclined upwardly-outwardly beyond the plane of the associated leg and their free ends extend from points beyond the plane of the associated leg relatively steeply upwardly-inwardly toward the head portion.

4,300,866
SELF-RETAINING SPRING WASHER
Charles K. Fisher, Belford, N.J., and Pierre E. Arias, Margency, France, assignors to TRW Inc., Cleveland, Ohio
Filed Dec. 26, 1979, Ser. No. 107,127
Int. Cl.³ F16B *37/02, 43/00*
U.S. Cl. 411—155 16 Claims

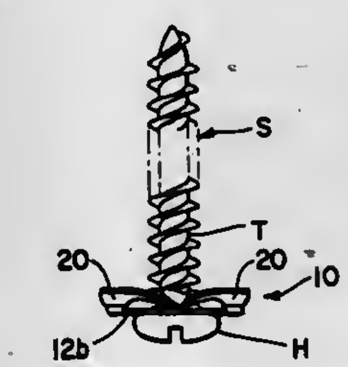

1. In combination, spring washer a and a threaded fastener of the type including a threaded shank and a head, the thread of the fastener having a crest, a groove and a predetermined sense and pitch, said washer comprising:
A. a generally flat, annular body defining a top surface, a bottom surface and a central aperture for receiving the shank of the fastener, the bottom surface of said body being adapted to bear against the head of the fastener;
B. a plurality of thread engaging teeth projecting above the top surface of said body about the central aperture for resiliently engaging the thread of the fastener and for retaining the washer on the fastener, each of said teeth including
i. a helical thread confronting edge that is oriented in a sense opposite to the sense of the fastener thread and having a pitch that is substantially steeper than the pitch of the fastener thread so as to engage and extend diagonally crosswise of the crest of the fastener thread; and
C. a plurality of spring elements also projecting above the top surface of said body in the same general direction as said teeth, said spring elements being adapted to flex downwardly toward said body when the head of the fastener is tightened against a workpiece and to resiliently bias the fastener axially away from the workpiece thereby to prevent loosening of the fastener relative to the workpiece.

4,300,867
PUSH-PULL APPARATUS FOR WALKIE FORK TRUCK
Kenneth A. Frees, St. Peters, Mo., assignor to Missouri Research Laboratories, Inc., St. Charles, Mo.
Filed Mar. 20, 1980, Ser. No. 132,266
Int. Cl.³ B60P *1/16*
U.S. Cl. 414—493 4 Claims

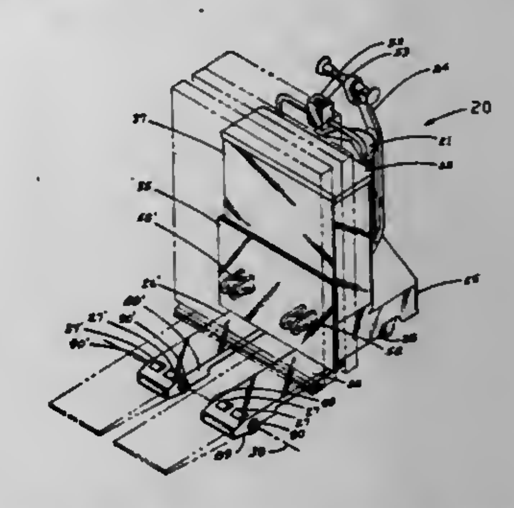

1. A modular, fully self-contained push-pull apparatus for unitary installation upon a conventional walkie type fork lift pallet truck having a power unit including at one end a tiller-operated drive wheel and at the other end a pair of liftable forks for providing conventional lifting of a pallet, said apparatus comprising a split platen including a pair of elongated platen members defining a slot between them, whereby said platen is of a forked character for engaging a conventional pallet if desired, said members being generally aligned with the respective forks and extending well beyond the ends of said forks, each of said platen members being of generally rectangular shape for including an outer edge of relatively thin character for contacting ground level upon tilting away from said platform away from said truck, each of said platen members being of flat plate-like character and each presenting a recess within the bottom surface thereof for receiving a respective one of said forks, said platen having at one end an upright frame extending upwardly from said platen proximate said power unit, a tilt control hydraulic motor interconnecting said upright frame with corresponding upright structure of said truck, means pivotally mounting said platen members to said forks for permitting tilting movement of said platen toward and away from said truck, said tilt control motor being actuable for effecting tilting movement of said platen toward and away from said truck, a push-pull mechanism including a scissors linkage, a pusher plate carried by said scissors linkage for movement across said platen upon extension and retraction of said scissors linkage relative to said upright frame, a scissors linkage actuating hydraulic motor for selective extension and retraction of said scissors linkage, gripper jaws associated with said pusher plate for gripping a loaded slip sheet for pulling a slip-sheeted load onto said platen, a gripper jaw actuating hydraulic motor for actuating said gripper jaws to grip and release said slip sheet, and a hydraulic power unit integrally carried by said push-pull apparatus for providing hydraulic fluid under pressure for operation of said tilt control motor, said scissors linkage actuating motor and said gripper jaw actuating motor.

4,300,868

NOZZLE GUIDE VANE ASSEMBLY FOR A GAS TURBINE ENGINE

Wilfred H. Wilkinson, Turnditch, and Harry Henshaw, Duffield, both of England, assignors to Rolls-Royce Limited, London, England

Filed Nov. 6, 1979, Ser. No. 92,088

Claims priority, application United Kingdom, Nov. 25, 1978, 46093/78

Int. Cl.³ F01D *25/26*

U.S. Cl. 415—137 **14 Claims**

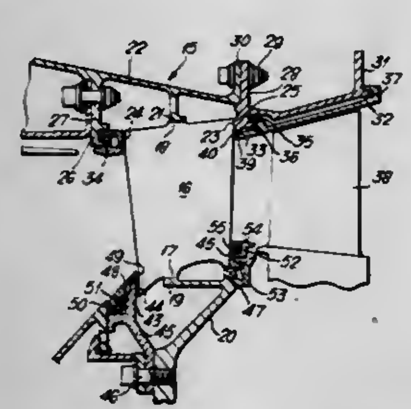

1. A nozzle guide vane assembly for a gas turbine engine comprising a circumferentially extending array of angularly spaced apart aerofoils, retaining structure for the aerofoils and projections from each aerofoil adapted to engage with the retaining structure to retain the aerofoils in their longitudinal direction, inner and outer platform members separate from the aerofoils and each comprising two skins, a thicker support skin having at least one aerofoil section aperture therein through which one said aerofoil projects and which retains the aerofoil against twisting, circumferential or axial loads and a thinner inner gas contacting skin which also has at least one aerofoil section aperture therein through which the aerofoil projects, said thinner inner gas contacting skin serving to define the respective boundary of the gas flow through the assembly, the aerofoil being free to slide through the apertures sufficiently to permit relative expansions in a direction longitudinal of the aerofoil, and sealing means associated with each said inner skin adapted to form a seal between said inner skin and said aerofoils.

4,300,869

METHOD AND APPARATUS FOR CONTROLLING CLAMPING FORCES IN FLUID FLOW CONTROL ASSEMBLIES

Judson S. Swearingen, 2235 Carmelina, Los Angeles, Calif. 90064

Filed Feb. 11, 1980, Ser. No. 120,478

Int. Cl.³ F01D *17/16*

U.S. Cl. 415—160 **16 Claims**

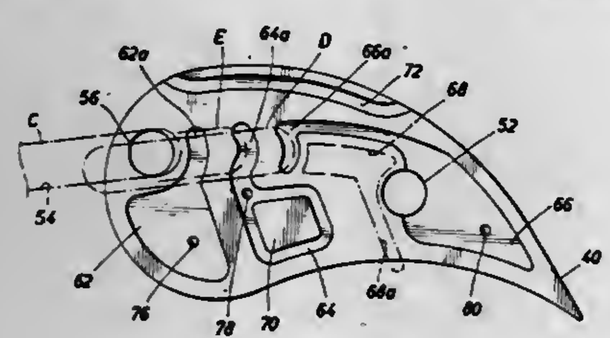

1. A method of controlling clamping forces in fluid flow control assemblies comprising a plurality of blades, constrained generally between parallel clamping surfaces and movable relative thereto, comprising the following steps:

(a) locating one slot per blade in the face of one of the clamping surfaces communicating with a pressure source; and

(b) locating at least one depression in the face of each blade adjacent the clamping surface with the slots such that, for at least one configuration of the blades relative to the clamping surfaces, a depression in each blade is in fluid communication with the corresponding slot.

4,300,870

PUMP CHAMBERS MINIMIZING FORMATION OF DEPOSITS

Charles E. Cox, Norristown, and Roger V. Eeckhout, Warminster, both of Pa., assignors to SCM Corporation, New York, N.Y.

Filed Apr. 12, 1979, Ser. No. 29,493

Int. Cl.³ F04B *19/24*

U.S. Cl. 417—53 **19 Claims**

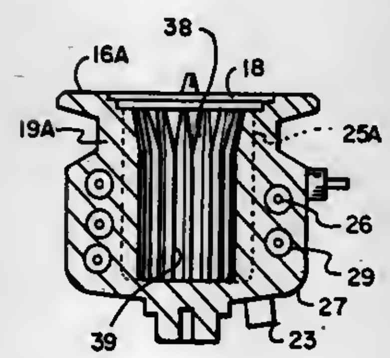

1. In a heated pump chamber for supplying hot water to a utilization device, the pump chamber receiving the water to be heated through an inlet, said chamber communicating with said utilization device through an outlet and comprising a peripheral wall including a portion having an internal surface in contact with the water, heating means associated with said wall for transfer of heat to said water through said internal surface, at least said portion of the wall intervening between said heating means and said water and said internal surface accumulating thermally-insulating mineral deposits thereon in relation to mineral content of the water received; the improvement comprising combination therewith of a plurality of discontinuities formed on said internal surface whereby accumulation of mineral deposits is reduced.

17. A method of reducing the accumulation of mineral deposits from water heated in pump chambers having a peripheral wall including an inner surface in contact with the water, heat flowing to the water through the internal surface, comprising the steps of: forming a plurality of discontinuities on the inner surface of the wall prior to the steps of admitting the water into the chamber and heating the water in the chamber, thereby inducing the cracking and flaking of minerals deposited as a result of said heating.

4,300,871

METHOD OF, AND APPARATUS FOR, EXTRACTING ENERGY FROM WAVES

Eric R. Laithwaite, and Stephen H. Salter, both of c/o United Kingdom Atomic Energy Authority, 11 Charles II St., London SW1Y 4QP, England

Filed Dec. 26, 1979, Ser. No. 107,366

Int. Cl.³ F03B *13/12*

U.S. Cl. 417—331 **8 Claims**

1. An apparatus for extracting energy from waves on a liquid by use of the angular motion of a part of the apparatus in response to the waves, wherein the improvement comprises, at least one gyroscope means arranged to be subjected to the effect of said angular motion so as to cause precession of the

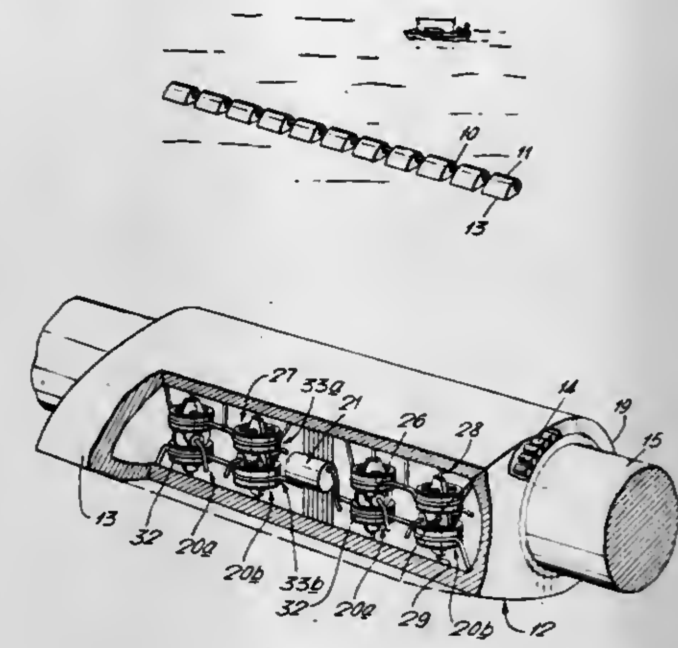

gyroscope means, and means for performing useful work from the precession of the gyroscope means.

4,300,872

OUTBOARD MOTOR WITH HYDRAULIC PUMP AND MEANS FOR ATTACHING HYDRAULIC PUMP TO SUCH A MOTOR

Peter S. Brown, R.F.D. 2, Warren, Me. 04864, and Samuel H. Tibbetts, P.O. Box 82, Rockport, Me. 04856

Continuation of Ser. No. 861,684, Dec. 19, 1977, abandoned, which is a continuation-in-part of Ser. No. 740,885, Nov. 11, 1976, abandoned. This application Jan. 21, 1980, Ser. No. 113,737

Int. Cl.³ F04B *39/14*

U.S. Cl. 417—360 **13 Claims**

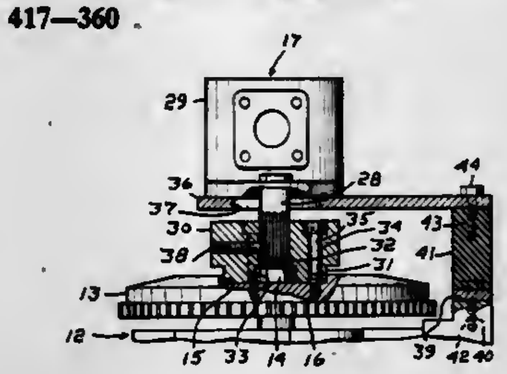

1. An attachment for securing a drive shaft of a hydraulic pump to an outboard motor having a vertical crankshaft and a fly wheel secured to the upper end thereof by a nut threaded on the crankshaft, said attachment including a coupling attachable to said fly wheel and to said drive shaft then to hold said shaft vertical with the weight of the pump transmitted to the crankshaft, and resiliently yieldable torque opposing means connected to the pump and to said motor laterally of the fly wheel, said torque means laterally yieldable to accommodate misalignment forces.

4,300,873

FUEL INJECTION SYSTEMS

Dorian F. Mowbray, Burnham, and Boaz A. Jarrett, Chiswick, both of England, assignors to Lucas Industries Limited, Birmingham, England

Filed Nov. 16, 1979, Ser. No. 94,904

Claims priority, application United Kingdom, May 12, 1979, 16562/79

Int. Cl.³ F04B *17/04*

U.S. Cl. 417—416 **5 Claims**

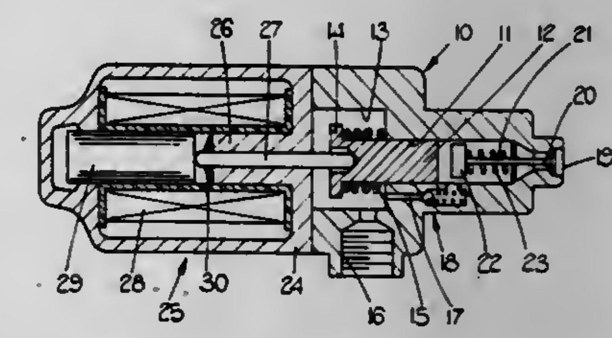

1. A fuel injection system comprising a pumping plunger slidable within a cylinder, an electromagnetic device including an armature for effecting movement of the pumping plunger in a direction to displace fuel from the cylinder, an outlet valve for controlling the flow of fuel from said cylinder, a fuel inlet to the cylinder through which fuel can flow into the cylinder during the return motion of the pumping plunger when the electromagnetic device is de-energised, an inlet valve for controlling the flow of fuel through said fuel inlet, stop means for limiting the movement of said armature when the electromagnetic device is energised, said stop means including a high rate resilient means which is compressed during the final movement of the armature towards said stop means but which is sufficiently strong to urge the armature in the opposite direction against the action of the magnetic forces produced by the electromagnetic device, by an amount sufficient to bring about a reduction in the fuel pressure in said cylinder.

4,300,874

ROTARY MACHINE WITH LENTICULAR ROTOR AND A CIRCULAR GUIDE MEMBER THEREFOR

Georgi D. Georgiev, Toronto, Canada, assignor to Capella Inc., Freeport, The Bahamas

Continuation-in-part of Ser. No. 914,952, Jun. 12, 1978, abandoned. This application Dec. 31, 1979, Ser. No. 108,675

Int. Cl.³ F01C *1/02, 21/08;* **F03C** *2/02;* **F04C** *2/02*

U.S. Cl. 418—54 **18 Claims**

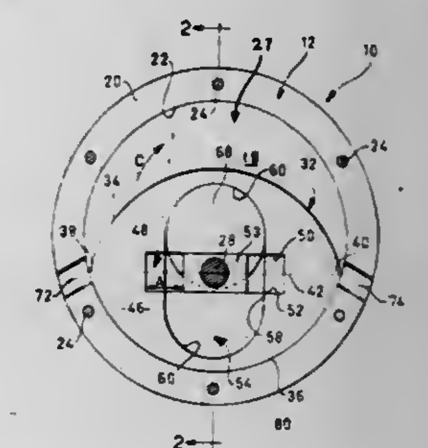

1. In a rotary machine of the type having a chamber with an annular wall having at least in part a cardioidal configuration, and a shaft extending into said chamber and having an acircular portion having mutually parallel and linear opposite edges, and mutually spaced inlet and outlet ports opening into said

chamber for the supply and discharge respectively of a fluid material, the improvement comprising;

a two-lobe lenticular rotor with symmetrically opposed apices and disposed within said chamber for eccentric rotation therein with said apices in sliding sealing contact with said annular wall, said rotor being provided with a first elongated slot having opposite sides within which said acircular portion of said shaft is slidingly disposed for driving reciprocating movement therewithin on rotation of said shaft and with a second elongated slot being further provided in an end surface thereof, having parallel opposite sides and perpendicular to said first elongated slot, and

a fixed circular guide member within said chamber extending into said second elongated slot within said rotor so that, on rotation of said rotor within said chamber, said opposite sides of said second elongated slot move tangentially around said guide member in response to relative reciprocating movement of said guide member along said second elongated slot with at least a semi-circular part of said circular guide member remaining within said second elongated slot at all times during such rotation of said rotor, said guide member having a predetermined diameter larger than said shaft, and located with its centre offset relative to the centre of said shaft, the relative diameters of said shaft and said guide members being such that said shaft lies within the circumstances of said guide member.

4,300,875

POSITIVE DISPLACEMENT MACHINE WITH ELASTIC SUSPENSION

Berthold Fischer, Lechenich; Hans-Peter Kabelitz, Cologne; Hansen Pfaff, Erftstadt, and Andreas Schmitz, Weilerswist, all of Fed. Rep. of Germany, assignors to Leybold-Heraeus GmbH, Cologne, Fed. Rep. of Germany

Filed Jul. 16, 1979, Ser. No. 57,996

Claims priority, application Fed. Rep. of Germany, Jul. 15, 1978, 2831179

Int. Cl.[3] **F01C** *1/02, 21/00;* **F04C** *25/02, 18/02*

U.S. Cl. 418—55 **3 Claims**

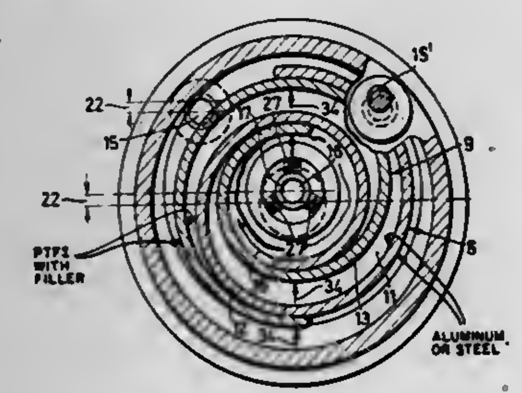

1. In a displacement machine operating according to the spiral principle and having a stationary housing, two displacement elements within said stationary housing presenting respective axially interengaging spiral-shaped walls, at least one crank drive connected to produce a relative translatory circular movement therebetween, one of said elements forming a rigid unit with said housing, the other element being connected to be driven by said crank drive, the improvement comprising means defining an elastic suspension disposed between said other displacement element and said crank drive for supporting the other element thereby permitting elastic movement between said elements in a plane perpendicular to the axis of translatory circular movement, and wherein said crank drive includes an output component connected to drive one of said displacement elements and constructed to follow a path having a radius greater than that of the relative circular movement between said displacement elements, thereby to prestress said suspension means in such a manner as to produce a bias force in a direction which passes through a contact point between said two displacement elements and which rotates together with the contact point during the relative circular movement, and wherein said displacement elements are made, at least at the mutually contacting surfaces thereof, of respectively different materials having a low coefficient of friction therebetween, to promote smooth sliding therebetween.

4,300,876

APPARATUS FOR FLUIDICALLY ATTENUATING FILAMENTS

John L. Kane, and Vikas M. Nadkarni, both of Newark, Ohio, assignors to Owens-Corning Fiberglas Corporation, Toledo, Ohio

Filed Dec. 12, 1979, Ser. No. 99,059

Int. Cl.[3] **D01D** *5/00*

U.S. Cl. 425—66 **7 Claims**

1. Apparatus for fluidically attenuating streams of molten material into filaments comprising:

a base having a first chamber and a wall having a plurality of apertures therethrough in communication with said chamber, said first chamber being adapted to receive a fluid;

a first member having a first arcuate surface and a distal end, the first member being adapted to be joined to said base such that first arcuate surface is adjacent said apertures;

a second member having a second arcuate surface, a head region, and a third arcurate surface, said head region being located intermediate and contiguous with said second and third arcuate surfaces, said second member being joined to said base such that said second arcuate surface is positioned adjacent said apertures such that said first arcuate surface, said second arcuate surface and said head region form a smoothly converging passageway having an inlet section, the head region being positioned relative to the distal end to form an outlet section of said conveying passageway through which said fluid is moved, said third arcuate surface being adapted to control the moving fluid issuing from said outlet section, wherein the contraction ratio of the cross-sectional area of the inlet section to the cross-sectional area of the outlet section of the converging passageway is within the range of values from about 150 to about 750 to 1.

4,300,877

UNDERWATER PELLETIZER

Howard W. Andersen, Houston, Tex., assignor to Sterling Extruder Corp., South Plainfield, N.J.

Filed Jan. 10, 1979, Ser. No. 2,550

Int. Cl.[3] **B29C** *17/14*

U.S. Cl. 425—67 **16 Claims**

1. In an underwater plastic pelletizer of the type comprising a die plate supporting body including an inlet, an outlet and an extrusion cavity; a die plate on said body positioned in closing relation to said outlet defining a plurality of extrusion orifices arranged annularly thereon in communication with said cavity; rotatable cutting means comprising a rotating knife hub and a plurality of rotating knives mounted for rotation therewith for cutting plastic extruded from said orifices into plastic pellets; a water-tight housing secured to said body over said die plate having water inlet means and outlet means for permitting removal of cut plastic pellets by moving water; and means for heating said die plate to maintain plastic in a flowing condition as it passes through said orifices, the improvement comprising:

(a) a diverter plate having an inlet end in communication with said water inlet means and an outlet end disposed about said knife hub, said diverter plate including a peripheral flange disposed in a plane extending parallel to and spaced uniformly from said die plate, said peripheral flange dimensioned so as to completely overlie said plurality of extrusion orifices for confining the flow of inlet water generally uniformly to the region adjacent to and across the face of the die plate and in a direction generally parallel thereto.

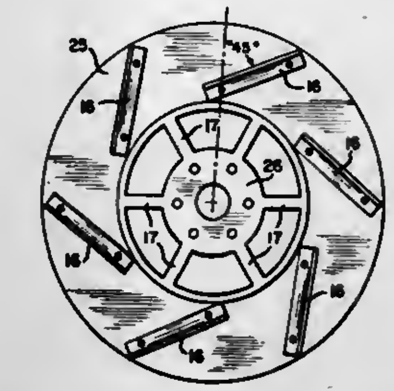

4,300,878

EXTRUSION DIE FOR FORMING COMPOSITE RUBBER-CORD STRIP

Donald G. Ible, Akron, Ohio, assignor to The Firestone Tire & Rubber Company, Akron, Ohio

Filed Aug. 27, 1980, Ser. No. 181,588

Int. Cl.[3] **B29F** *3/10*

U.S. Cl. 425—114 **8 Claims**

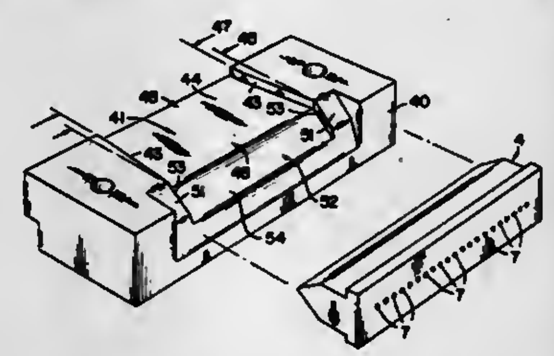

5. In an extrusion die structure having a die-throat with a composite-forming aperture having an entry for advanging parallel cords and elastomer and an exit for the composite, the improvement comprising

a first pair of opposed aperture sidewalls converging from entry to exit;

a second pair of opposed upper and lower aperture walls diverging from entry to exit;

two laterally spaced ramp-pairs converging upon the entry;

a cord guide engaging said ramp-pairs; and

recesses between the ramps of each said pair forming with a respective side of said guide a pair of converging channels for advancing elastomer;

the cross-sectional area of the aperture remaining substantially constant throughout.

4,300,879

PROCESS FOR THE HEAT-TREATMENT OF FINE-GRAINED MATERIAL

Wolf Goldmann; Dieter Michaelsen, both of Beckum; Dieter Dreyer; Dietmar Holsiepe, both of Ennigerloh; Peter Tiggesbaumker, Oelde; Klaus Bauer, Oelde; Manfred Durr, Oelde, and Heinz G. Mersmann, Beckum, all of Fed. Rep. of Germany, assignors to Krupp Polysius AG, Beckum, Fed. Rep. of Germany

Filed Nov. 2, 1979, Ser. No. 90,876

Claims priority, application Fed. Rep. of Germany, Nov. 30, 1978, 2851887

Int. Cl.[3] **F27B** *15/00;* **F27D** *7/00*

U.S. Cl. 432—14 **8 Claims**

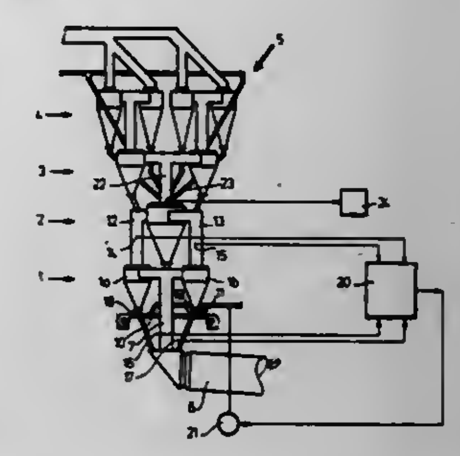

1. In a process for the heat-treatment of fine-grained material which is preheated by hot gases in a multistage preheater, subsequently deacidified to a large extent by the combustion of additional fuel in a precalcination zone, and calcined in a revolving tubular kiln, and wherein the supply of fuel to the precalcination zone automatically is regulated in normal operation in dependence upon the gas temperature of the preheater in such a way that, in the event of a reduction in said gas temperature, the supply of fuel is increased and vice versa, the improvement comprising measuring the temperature of the material as it leaves the precalcination zone, simultaneously measuring the temperature of the gases leaving the precalcination zone, measuring the difference between the material temperature and the gas temperature, and switching the regulation of the supply of fuel to said precalcination zone from automatic to manual in response to a predetermined maximum or minimum value of said temperature difference.

4,300,880

ORIENTATION-BLOW MOLDING EQUIPMENT AND JIG USED THEREFOR

Sadao Suzuki, Tokyo, Japan, assignor to Yoshino Kogyosho Co., Ltd., Tokyo, Japan

Continuation of Ser. No. 973,439, Dec. 26, 1978, Pat. No. 4,233,010. This application May 30, 1980, Ser. No. 154,761

Claims priority, application Japan, Dec. 27, 1977, 52-159155

The portion of the term of this patent subsequent to Nov. 11, 1997, has been disclaimed.

Int. Cl.[3] **F27B** *9/16*

U.S. Cl. 432—138 **3 Claims**

1. A heating chamber for use in a machine for producing biaxially oriented containers, comprising:

a rotary disk having a top face;

a cover disposed above said disk and spaced from the top face of said disk;

a core metal means located substantially on the outer circumference of the top face of said disk;

a jig means supported by said core metal means;

a plurality of sets of heating elements disposed in the vicinity of the outer circumference of the top face of said disk; and

a heat exhausting damper associated with said cover and each set of heating elements, the combinations of the sets

of heating elements and the heat exhausting dampers forming a plurality of heating zones within said heating

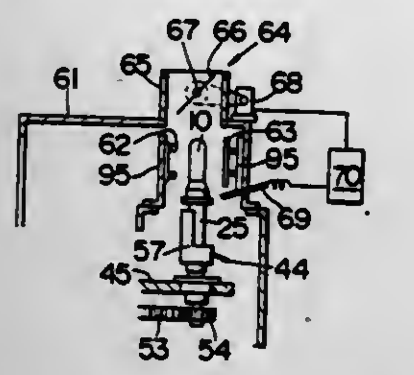

chamber, said heating zones providing incremental heating for a container piece mounted on said jig means.

4,300,881
TRUCK OR THE LIKE FOR CONVEYING CERAMIC ARTICLES THROUGH A KILN
Antonio Salviati, Vicenza, Italy, assignor to Salviata Impianti S.p.A., Vicenza, Italy
Filed Feb. 1, 1980, Ser. No. 117,509
Int. Cl.³ F27B *9/26*
U.S. Cl. 432—241 **15 Claims**

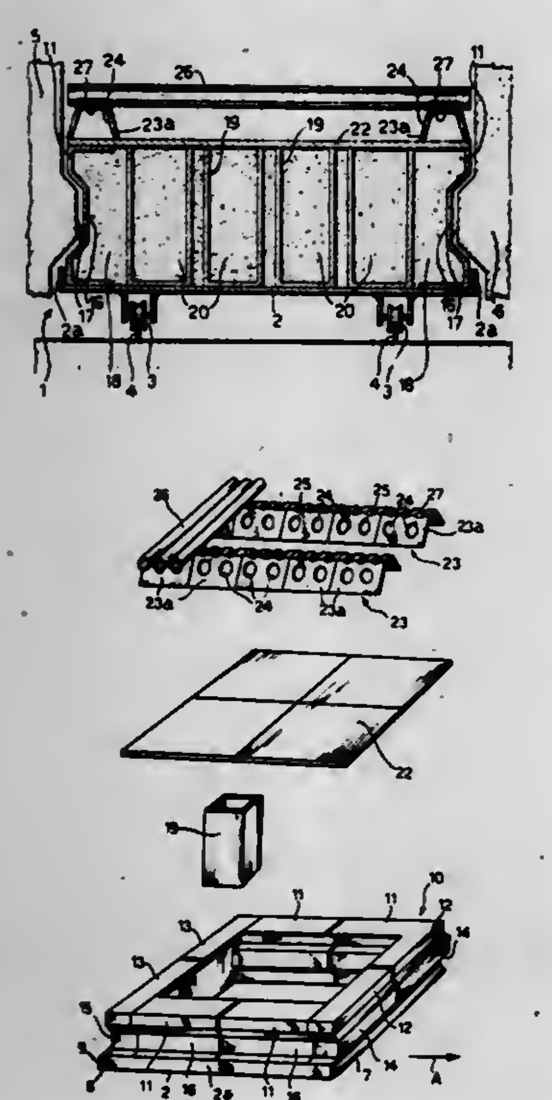

1. A truck for conveying ceramic articles through a kiln comprising
a base plate,
truck frame members disposed on said base plate, said truck frame members defining the walls of said truck;
at least two load bearing means disposed on said frame members on opposite sides thereof, and
a plurality of tubular roller means held by said bearing means, transversely with respect thereto, and in a freely rotatable manner and in spaced relationship from said frame members, said roller means serving as the bearing surface for supporting the ceramic articles to be treated.

4,300,882
INDUSTRIAL FURNACE WITH SIDE WALL CERAMIC INSULATING MODULES
Ewald R. Werych, Elm Grove, Wis., assignor to General Signal Corp., Stamford, Conn.
Division of Ser. No. 50,547, Jan. 21, 1979, Pat. No. 4,246,852. This application Jul. 21, 1980, Ser. No. 170,960
Int. Cl.³ F27D *1/00*
U.S. Cl. 432—247 **17 Claims**

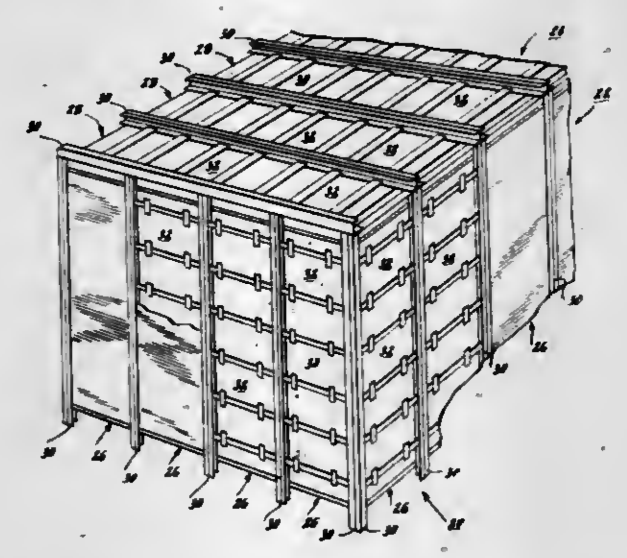

1. An industrial furnace used for material heat treatment and the like, comprising:
a plurality of sets of ceramic fiber insulating modules with each set arranged in a vertical stack and disposed to present contiguous aligned surfaces to the furnace interior;
support means comprising rigid elements supporting each of said modules vertically;
a plurality of retainer clip means for said modules;
each of said retainer clip means including at least one sharp spike inserted into the side edge surface of a corresponding module;
each of said retainer clip means further including at least one spike support arm extending horizontally from the corresponding spike to the outer surface of the module, remote from the furnace interior; and
means interengaging said spike support arms and said rigid elements to provide for holding the modules securely against horizontal movement.

4,300,883
ORTHODONIC MODEL TRIMMER AID
John A. Mier, 3166 Palm Dr. #58, Fullerton, Calif. 92632
Continuation of Ser. No. 965,837, Dec. 4, 1978, abandoned. This application Apr. 22, 1980, Ser. No. 142,774
Int. Cl.³ A61C *19/00*
U.S. Cl. 433—49 **4 Claims**

1. An angulating device for an orthodonic model trimmer comprising:
(a) A base comprising a lateral trough portion;
(b) A sliding angulating holder to which is attached an arm and said holder being positioned within said trough portion of said base;
(c) An angulating fence containing a vertical portion adapted for placement onto said sliding angulating holder;
(d) A plate attached to a flat portion of said fence; an opening within said holder for placement of said plate;

(e) Means for locking said arm and said angulating fence in a multitude of angular positions;

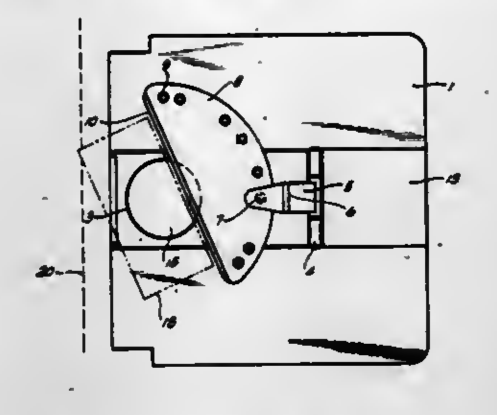

(f) Means whereby a dental cast can be placed onto said device for the trimming of said model.

4,300,884
CASTING COLLAR FOR DENTAL IMPRESSION TRAY
Hector Camacho, 9972 66th Rd., Apt. 5-B, Forest Hills, N.Y. 11374
Filed Feb. 28, 1980, Ser. No. 125,326
Int. Cl.³ A61C *19/00*
U.S. Cl. 433—74 **13 Claims**

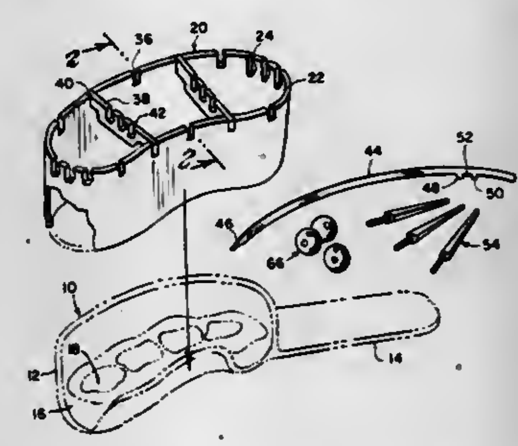

1. A collar assembly for a dental impression tray, comprising:
a preformed substantially oval member having a continuous, thin, outer wall which forms an upstanding peripheral enclosure surrounding a dental impression tray, and having an open top and bottom;
a plurality of notches formed about the upper edge of the wall and opposing ends thereof for supporting depending dowel pins positioned to engage teeth being cast in the tray;
removable coupling means for securely retaining the dowel pins in place while permitting longitudinal, lateral and axial positioning of the dowel pins comprising
at least one rod spanning across the longer dimension of the oval member and retained within opposing ones of said notches, and at least one dowel depending therefrom.

4,300,885
PERCUSSIVE DENTAL CROWN EXTRACTOR
George Khait, 516 28th Ave., #3, San Francisco, Calif. 94121
Filed Jul. 30, 1980, Ser. No. 172,860
Int. Cl.³ A61C *3/08*
U.S. Cl. 433—151 **10 Claims**

1. A percussive device comprising, in combination:
a cylinder,
a tube telescoped into said cylinder for axial movement with respect thereto,
a hammer slidably mounted for axial movement within said tube,
means urging said hammer in an axial direction to a first position in said tube,
coupling means for moving said hammer to a cocked position axially away from said position in response to movement of said tube in an axial direction with respect to said cylinder, and

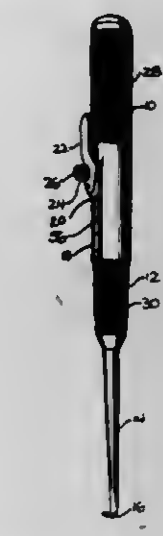

sear means for releasably holding said hammer in said cocked position, whereby actuation of said sear means when said hammer is in said cocked position will allow said hammer to fly back to said first position in said tube and thereby cause a percussive reaction within and consequent limited movement of said device.

4,300,886
SHAPED DENTAL ARTICLES
Carlhans Süling, Odenthal; Gerhard Balle; Bernd Leusner, both of Leverkusen; Hans-Hermann Schulz, Leichlingen, and Michael Walkowiak, Cologne, all of Fed. Rep. of Germany, assignors to Bayer Aktiengesellschaft, Leverkusen, Fed. Rep. of Germany
Continuation of Ser. No. 959,548, Nov. 13, 1978, abandoned. This application Jun. 9, 1980, Ser. No. 158,031
Claims priority, application Fed. Rep. of Germany, Nov. 25, 1977, 2752611
Int. Cl.³ C08L *75/00;* **A61C** *13/00, 13/22*
U.S. Cl. 433—202 **4 Claims**

1. A denture, crown, bridge or teeth prepared from an elasticized polymethacrylate obtained by bead polymerization of (A) 88 to 99.5% by weight of a polymer consisting of polymerized units of (1) at least one methacrylic acid ester with 1 to 10 C atoms in the aliphatic, saturated alcohol component, (2) of said methacrylic ester polymer containing up to 30% by weight of copolymerized units of at least one monomer from the group consisting of acrylic acid esters with 1 to 10 C atoms in the aliphatic, saturated alcohol component, hydroxyalkyl esters of acrylic acid or methacrylic acid with 2 to 4 C atoms in the alkyl group, styrene, vinyl acetate (meth)acrylamide, (meth)acrylic acid itaconic acid, and (B) 0.5 to 12% by weight of a diamine-lengthened polyurethane which has been obtained from
(1) one or more substantially linear bifunctional hydroxyl compounds having a molecular weight of from 400 to 6000 and a glass transition temperature of $\leqq -20°$ C. and selected from polyesters, polyethers, polyacetals, polycarbonates, polyesteramides and polyamides,
(2) a diisocyanate from the group consisting of (a) an aliphatic diisocyanate with a branched carbon skeleton of 7 to 36 C atoms, (b) a cycloaliphatic diisocyanate and (c) an aliphatic or cycloaliphatic diisocyanate modified with a vinyl monomer by free radical grafting copolymerization, and
(3) an aliphatic or cycloaliphatic diamine and a monofunctional chain terminator.

4,300,887
METHOD OF MANUFACTURE OF RAISED RELIEF ILLUMINATED GLOBE
Wolfgang J. Riemer, Chicago, Ill., assignor to Replogle Globes, Inc., Chicago, Ill.
Filed Mar. 31, 1980, Ser. No. 135,538
Int. Cl.³ G09B *27/08*
U.S. Cl. 434—132 **6 Claims**

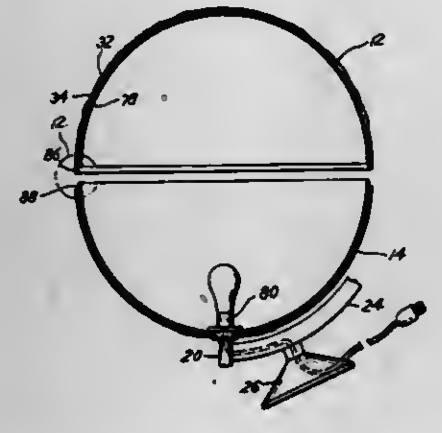

1. A hollow globe structure comprising, in combination:
a plurality of connected globe sections, each section including a flexible plastic outer sheet with printing thereon; and a rigid, thin walled, molded plastic inner wall with an outside surface adhered to said outer sheet and defining a relief pattern impressed on the outer sheet by the outside surface of the inner wall, said inner wall having a generally smooth, uniform inner surface, said inner wall having sufficient thickness to maintain and define the shape of the globe.

4,300,888
REMOTE OUTBOARD MOTOR STEERING CONTROL
Richard L. Waraing, 973 S. Quail Way, Lakewood, Colo. 80226
Filed Dec. 27, 1979, Ser. No. 107,670
Int. Cl.³ B63H *21/26*
U.S. Cl. 440—62 **8 Claims**

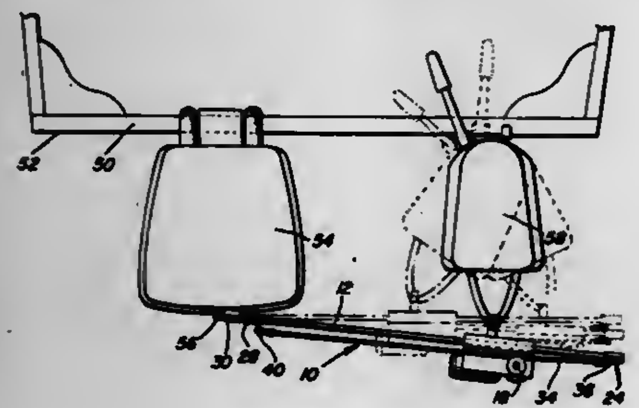

1. A remote outboard motor steering control for connection between a first stationary mounting location on a boat and a lightweight trolling motor oscillatably supported from said boat and including a second steering control mounting location, said steering control including an elongated bar, a mounting bracket mounted on said bar for guided movement therealong, a reversible electric motor driven capstan journaled from said mounting bracket, an elongated flexible tension member extending between and anchored relative to the opposite end portions of said bar and having an intermediate portion thereof looped about said capstan, and first and second connection structure carried by said bracket and one end of said bar for releasable universal connection with said mounting locations.

4,300,889
SHALLOW DRAFT PROPELLER POCKET
Robert S. Wormser, 6880 SW. 19th Ave., Ocala, Fla. 32671
Filed Apr. 1, 1980, Ser. No. 136,315
Int. Cl.³ B63H *5/06*
U.S. Cl. 440—69 **6 Claims**

1. In a propeller driven watercraft having a hull including a bow, a stern, a longitudinal axis and a keel, the improvement comprising an elongated water receiving flow control pocket defined in the hull and intersecting the stern, said pocket including an entrance edge transversely disposed to the hull axis, an upper planar surface extending from said entrance edge obliquely upward toward said stern, said upper surface having lateral edges converging in the direction of said stern, planar lateral surfaces each having a lower edge intersecting said hull and an upper edge intersecting said upper surface defining said upper surface lateral edges, said lateral surfaces each converging upwardly and of a generally triangular configuration each having an apex intersecting said entrance edge and a base intersecting said stern, the transverse dimension of said entrance edge being slightly greater than the transverse dimension between the intersection of said lateral surfaces and said hull at said stern, a planar deflector surface intersecting said upper surface, stern, and said lateral surfaces, said deflector surface being slightly obliquely related to the horizontal extending downwardly from its intersection with said upper surface toward said stern, and a planar transition surface extending obliquely forward and downward of said entrance edge intersecting said entrance edge throughout its length and intersecting said hull and keel, said transition surface having a forward edge having a transverse width less than the transverse width of said pocket entrance edge.

4,300,890
AUTOMATIC TENSION CONTROL MECHANISM FOR A DRIVE BELT
Melvin H. Hallmann, Middletown, and Burr E. Stephens, Anderson, both of Ind., assignors to General Motors Corporation, Detroit, Mich.
Filed Mar. 31, 1980, Ser. No. 135,655
Int. Cl.³ F16H *7/12*
U.S. Cl. 474—110 **4 Claims**

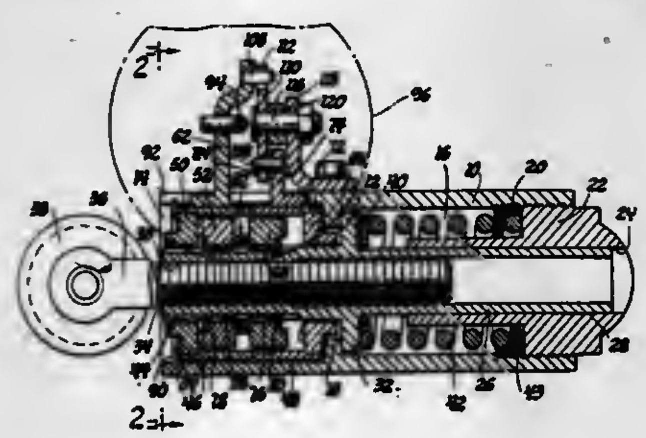

1. A belt tension controller for controlling the tension in a belt between maximum and minimum limits; said belt tension controller comprising: pulley support means for rotatably supporting a pulley adapted to direct and support a belt and being subjected to a force level proportional to the tension force in the belt; actuator means having an output member for moving said pulley support means to change the belt tension, and an input member; spring means for applying a force to and urging the input member in one direction, said input member being urged in the opposite direction by the tension force of the belt on said output member; and drive means operatively connected to said input member including unidirectional drive motor means, first and second clutch means, and linkage means for connecting said first and second clutch means to said drive motor means, said drive means being operable in response to said spring means being the higher force on the input member to connect said first clutch means to the input member to selectively move the output member in a direction to increase the belt tension force level and balance the forces on the input member and being operable in response to the belt tension being the higher force on the input member to connect said second clutch means to the input member to selectively move the output member in a direction to reduce the belt tension force level and balance the forces on the input member.

4,300,891
APPARATUS FOR DECURLING A CONTINUOUS WEB
Robert P. Bemiss, #5 Drayton Rd., Hillsborough, Calif. 94010
Filed Mar. 27, 1980, Ser. No. 134,685
Int. Cl.³ D21F *7/00*
U.S. Cl. 493—8 **11 Claims**

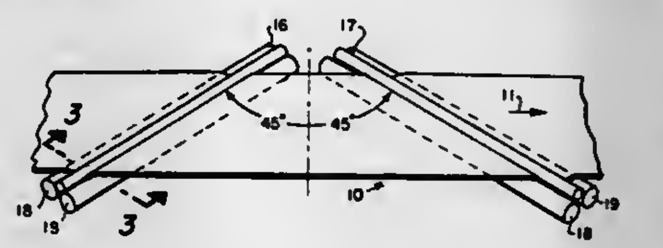

1. Apparatus for decurling a continuously advancing web of material having a longitudinal axis extending in the direction of travel, comprising:
first and second decurling apparatus each comprising elongated members spaced in close proximity to each other to bend the web passing therebetween at a sharp angle and impart a decurling effect on the material; and
means positioning said first and second decurling apparatus in the plane of the web and at a right angle to each other and at a 45° angle to the longitudinal axis of the web such that each apparatus bends the web both crosswise and lengthwise relative to the longitudinal axis to correct curl therein.

4,300,892
PLASTICS BAGS PRODUCTION
John G. Barnes, Brampton, and Charles R. Murray, Toronto, both of Canada, assignors to Imperial Chemical Industries Limited, London, England
Continuation of Ser. No. 778,926, Mar. 18, 1977, now Defensive Publication No. T966,002. This application Sep. 17, 1979, Ser. No. 76,440
Claims priority, application United Kingdom, Mar. 23, 1976, 11632/76
Int. Cl.³ B31B *1/66, 1/84*
U.S. Cl. 493—193 **7 Claims**

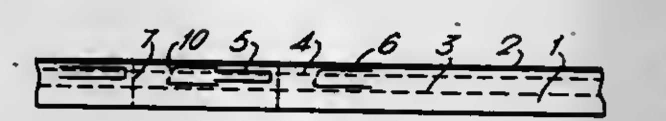

1. In a method for producing plastics bags from a web of plastics material which comprises folding in the side margins of the web to form overlapping panels, repetitively advancing the web by predetermined increments of one bag unit length, longitudinally heat-sealing the overlapping panels together for a length of at least a major portion of one bag unit, heat-sealing the web transversely and at least partially severing the web to define individual bag units;
the improvement consisting in heat-sealing together the two overlapping panels of each bag unit by forming two longitudinal seals which partially overlap to provide a forward longitudinal seal and a rear longitudinal seal with respect to the direction of travel of the web; at least one of said longitudinal seals is substantially hairpin in shape, said seal being interrupted in the hairpin bend whereby any air which may be enclosed in the bend may escape, the hairpin shape providing a transverse seal adjacent to the valve, and the rear longitudinal seal of each bag unit being formed simultaneously with the forward longitudinal seal of the adjacent following bag unit.

4,300,893
APPARATUS FOR APPLYING TRANSVERSE WELD SEAMS TO SUPERPOSED WEBS OF PLASTICS FILM, PREFERABLY IN THE PRODUCTION OF BAGS FROM WEBS OF TUBULAR OR SEMI-TUBULAR PLASTICS
Fritz Achelpohl, and Horst Schneider, both of Lengerich, Fed. Rep. of Germany, assignors to Windmoller & Holscher, Lengerich, Fed. Rep. of Germany
Filed Mar. 13, 1979, Ser. No. 20,173
Claims priority, application Fed. Rep. of Germany, Mar. 13, 1978, 2810895
Int. Cl.³ B31B *23/60*
U.S. Cl. 493—194 **15 Claims**

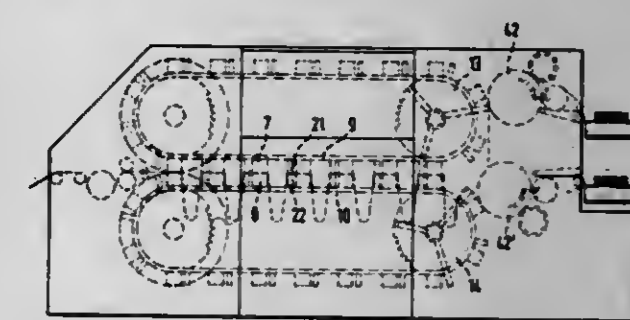

1. Apparatus for applying transverse weld seams to superposed webs of plastics film, preferably in the production of bags from webs of tubular or semi-tubular plastics, comprising a plurality of oppositely acting welding jaws which are guided in pairs along a planar processing path traversed by the webs, and at both sides of the webs, on endless chains running over sprockets at the ends of the processing path, enclose the webs between each other, are disposed transversely to the webs and each comprise two parallel welding bars between which there is on one side a cutting knife projecting beyond the bars and on the other side a groove receiving the knife, characterized in that secured to the endless chains (9, 10) behind the welding jaws (7, 8), as viewed in the conveying direction, there are holding bars (21, 22) of which the holding means, when the holding bars (21, 22) move apart in the vicinity of leading sprockets (13, 14) in the conveying direction, so hold leading ends of bags (25) severed from the webs and behind the transverse weld seams that the bags are taken along alternately by the holding bars (21, 22), and that means are provided for taking the bags off (42, 42') the holding bars (21, 22) for stacking purposes.

4,300,894

METHOD OF MAKING L-SHAPED INFLATABLE RESTRAINT CUSHION

Richard J. Cumming, Warren; John DeBano, Roseville; Vincent F. Sajewski, Sterling Heights; John F. Zens, Algonac, and William A. Gardella, Mt. Clemens, all of Mich., assignors to General Motors Corporation, Detroit, Mich.

Filed Dec. 3, 1979, Ser. No. 99,871

Int. Cl.^{3} B60R *21/08*

U.S. Cl. 493—210 **3 Claims**

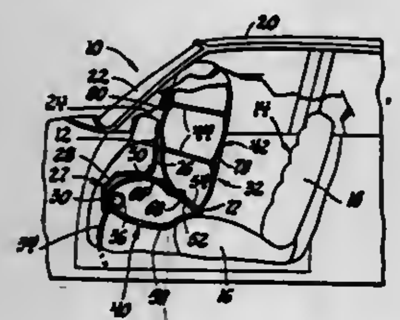

1. A method of making a restraint cushion which when inflated forms a generally horizontally orientated lower compartment having top and bottom walls connected to a vertically orientated upper compartment having front and rear walls, said method comprising the steps of:

(a) providing upper and lower sheets of flexible material which are joined together along a rear edge and the two side edges;

(b) forming a pleated section in said upper sheet along an axis extending transversely to said side edges;

(c) connecting the parts of said pleated section together, starting adjacent one side edge and ending adjacent the other side edge;

(d) joining said pleated section to said lower sheet so that said pleated section forms a wall between said lower compartment and said upper compartment;

(e) providing at least one opening between said upper and lower compartments for allowing gas to flow from said lower compartment to said upper compartment; and

(f) joining said front and rear walls of said upper compartment so as to limit the extent said front and rear walls move relative to each other when said upper compartment is inflated.

4,300,895

STRIPPER ROLLER ASSEMBLY

Raymond Meenes, Hawthorne, N.J., assignor to Mayflower Electronic Devices, Inc., Little Ferry, N.J.

Filed Nov. 15, 1979, Ser. No. 94,668

Int. Cl.^{3} B65H *45/00*

U.S. Cl. 493—416 **4 Claims**

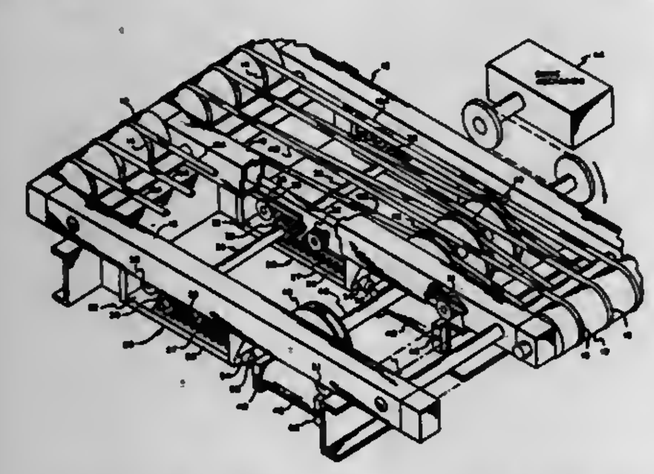

1. A stripper roller assembly for use with a folding machine having a stationary main frame, said assembly comprising:

first and second parallel spaced horizontally elongated rollers lying in a horizontal plane;

a plurality of spaced horizontally elongaged members disposed at right angles to said rollers, each member extending between and being secured to said rollers, each roller being freely rotatable about its horizontal axis in said members, each member having spaced vertical wheels on one side thereof which rotate freely about horizontal axes;

a like plurality of horizontally elongated (means) rack devices which cooperate with said members, each (means) device being disposed adjacent a corresponding member, each (means) device having a rectangular opening having top and bottom edges, each (means) device having a horizontal rack gear on the bottom edge of its opening and rails on the top and bottom edges of the opening, the wheels of each member slidably engaging the rails on the adjacent (means) device whereby each (means) device is maintained in horizontal sliding engagement with the corresponding adjacent member, each (means) device being horizontally slidable toward and away from the first roller along the corresponding member between a first position at which the horizontal separation between each (means) device and the first roller is a minimum and a second position at which this separation is a maximum;

a horizontally elongated shaft parallel to and disposed between said rollers, said shaft being supported on said frame and rotatable about its axis, said shaft extending through the rectangular openings and carrying a like plurality of pinion gears secured thereto, each pinion gear engaging a corresponding one of said rack gears; and

a like plurality of horizontal cylinders, each cylinder having a cylinder element and a horizontal piston slidable back and forth therein between a fully withdrawn position in said element and a fully extended position, one end of each piston being always disposed outside of its corresponding cylinder element and being coupled to a corresponding one of said (means) devices to cause same to slide back and forth between its first and second positions, each cylinder element being secured to said main frame whereby when the pistons are caused to move simultaneously from withdrawn to extended positions, the (means) devices slide along the corresponding members toward the first roller while the rack gear of each (means) device simultaneously engages and rotates the corresponding pinion gear, causing the members and rollers to move outward as a unit with respect to the cylinder elements until the (means) devices attain said first position and whereby when the pistons are caused to move simultaneously from extended to withdrawn positions, the members and rollers move inward as a unit with respect to the cylinder elements until the (means) devices attain said second position.

4,300,896

DEVICE FOR FOLDING MATERIALS TO BE FOLDED

Horst Priebs, Bielefeld, Fed. Rep. of Germany, assignor to HAT-Hohmann GmbH & Co. Automations-Technik, Kommanditgesellschaft, Leonberg, Fed. Rep. of Germany

Filed Nov. 14, 1979, Ser. No. 94,210

Claims priority, application Fed. Rep. of Germany, Nov. 15, 1978, 2849431

Int. Cl.^{3} B65H *45/14*

U.S. Cl. 493—419 **2 Claims**

1. Device for folding materials, comprising:

means for transporting the material along a substantially horizontal transport path including, a belt conveyor material transport assembly extending over a first, second and third transport section respectively disposed along the direction of transport of the material, said assembly including a first, second and third group of individual endless belts each having an outer surface and an upper and lower run, said outer surface of said lower run of said first group of belts being disposed above each of said three transport sections, said outer surface of said upper run of

said second and third group of belts respectively conveying the material through said second and third transport sections, and a swing-plate having an upper and lower surface, a rear edge being closest to said third transport section and a front edge opposite said rear edge, one of said surfaces of said swing-plate being disposed below the transport path;

a retractable material stop disposed between said individual belts of said third group of endless belts;

means for rotatably supporting and guiding said swing-plate about an axis adjacent said rear edge from a starting position wherein said front edge thereof is in a given position through a 180° turn about said rear edge thereof and returning said opposite front edge thereof to said given position after the turn;

a holder supported above said swing-plate which is movable through a given swing and having extensions disposed thereon, said extensions cooperating with said swing-plate to return said swing-plate to said starting position;

in a double-folding operation, said holder being contactable with said rear edge of said swing-plate, said front edge of said swing-plate forming a first crease in the material to be folded as the material is pressed against said first group of belts and said swing-plate is turned, and said rear edge forming a second crease;

guide rollers supporting said third group of endless belts at an end thereof closest to said swing-plate;

in a single-folding operation, said guide rollers being swingable between individual belts of said first group of belts for preventing said rear edge of said swing-plate from forming a crease;

simultaneously operable exit rollers disposed subsequent to said third transport section relative to the direction of transport for additionally creasing the folds in the material as it leaves the device;

sensor means disposed on said stop and being actuatable by the leading edge of the material in the transport direction for shutting off said belt conveyor assembly and for synchronizing operation of said swing-plate, holder and stop;

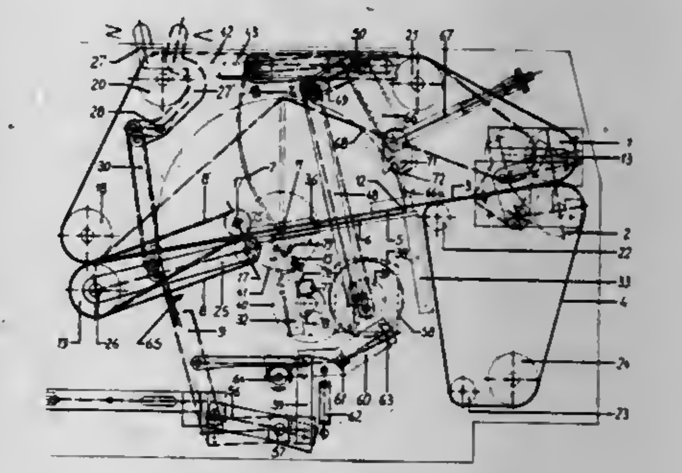

and comb means for folding the material around said front edge of said swing-plate, said comb means including a multiplicity of spaced apart fingers, each finger including an angular folder having an acute-angle notch formed therein into which said front edge of said swing-plate is insertable with the material there between.

4,300,897
METHOD FOR BLEACHING WITH PEROXYMONOSULFATE-BASED COMPOSITIONS
Frederick W. Gray, Summit, N.J., assignor to Colgate-Palmolive Company, New York, N.Y.
Division of Ser. No. 702,395, Jul. 6, 1976, Pat. No. 4,123,376, which is a continuation-in-part of Ser. No. 391,058, Aug. 24, 1973, Pat. No. 4,028,263. This application Oct. 30, 1978, Ser. No. 955,518
The portion of the term of this patent subsequent to Jun. 7, 1994, has been disclaimed.
Int. Cl.[3] C11D *7/56, 7/54, 3/395*
U.S. Cl. 8—111 — 10 Claims

1. A method of bleaching stained dyed laundry fabrics which comprises bleaching said fabrics in an aqueous medium comprising about 5 to 25 parts of a water soluble peroxymonosulfate bleach, about 3 to 20 parts of a water soluble inorganic bromide, in sufficient quantity to promote the bleaching activity of the peroxymonosulfate bleach, and about 2 to 30 parts of an aromatic sulfonamide compound selected from the group consisting of benzene sulfonamide and alkylbenzene sulfonamides wherein the alkyl is of about 1 to 12 carbon atoms, N-alkali metal salts of said sulfonamides, N-acetyl and N-benzoyl derivatives of said sulfonamides and of said salts of said sulfonamides, and mixtures of such sulfonamides, salts and derivatives, which inhibits destruction of dyes and overbleaching of dyed materials present in the aqueous medium while stains to be bleached are effectively removed from the fabrics.

4,300,898
COMPOSITIONS FOR TREATING TEXTILE FABRICS
Bernard F. North, Rock Hill, S.C., assignor to Sun Chemical Corporation, New York, N.Y.
Continuation-in-part of Ser. No. 92,630, Nov. 8, 1979. This application Sep. 16, 1980, Ser. No. 187,720
Int. Cl.[3] D06M *13/34*
U.S. Cl. 8—185 — 9 Claims

1. A composition for treating a textile fabric containing cellulosic fibers which comprises a blend of (1) a glyoxal/cyclic urea condensate or an alkylated derivative thereof and (2) dimethylol dihydroxyethylene urea or an alkylated derivative thereof.

4,300,899
TRIAZINE AND PYRIMIDINE DERIVATIVES AS RESERVING AGENTS
Hans-Rudolf Schmid, Riehen, Switzerland, assignor to Sandoz Ltd., Basel, Switzerland
Continuation of Ser. No. 921,552, Jul. 3, 1978, abandoned. This application Feb. 20, 1980, Ser. No. 123,084
Claims priority, application Switzerland, Jul. 7, 1977, 8423/77; Jul. 7, 1977, 8424/77
Int. Cl.[3] D06P *5/12*
U.S. Cl. 8—455 — 19 Claims

1. A process for reserving an anionic dyeable substrate against anionic dyes which comprises applying to the substrate a compound of formula I

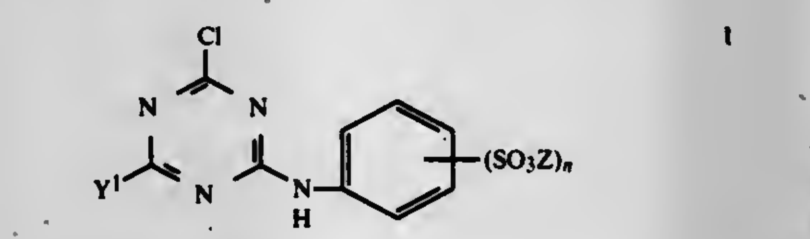

I

wherein Y is (C_{1-6})alkoxy,
Z is hydrogen, an alkali metal or ammonium,
and n is 1 or 2,
and then fixing said compound on said substrate.

4,300,900
PROCESS AND DYE PREPARATIONS FOR PAD-DYEING
Roland Putzar, Therwil, and Hans Fierz, Allschwil, both of Switzerland, assignors to Ciba-Geigy Corporation, Ardsley, N.Y.
Continuation of Ser. No. 896,108, Apr. 13, 1978, abandoned. This application Jun. 9, 1980, Ser. No. 157,607
Claims priority, application Switzerland, Apr. 19, 1977, 4809/77
Int. Cl.[3] D06P *1/647, 1/653, 1/64;* C09B *67/40*
U.S. Cl. 8—524 — 19 Claims

1. A storage-stable solid or liquid dye preparation consisting essentially of at least 10% of at least one dye, insoluble or difficultly soluble in water; an anionic or nonionic dispersing agent; at least one colorless metal complex which is stable in said preparation but unstable and capable of splitting under dyeing conditions at a pH of 3 to 6 and consisting of an alkaline earth metal or trivalent metal cation and at least one polydentate complexing agent; alone or in the presence of further biological stabilizing, humectant or thickening additives, water, organic water-miscible solvents or mixtures thereof, said colorless metal complex being present in said solid preparation in an amount of 1 to 60% by weight and in said liquid preparation in an amount of 0.1 to 20% by weight relative to the total preparation.

4,300,901
LIQUID FORM OF DYESTUFFS
Brian L. Yates, Manchester, and Malcolm C. Clark, Heald Green, both of England, assignors to Ciba-Geigy Corporation, Ardsley, N.Y.
Filed May 27, 1980, Ser. No. 153,641
Claims priority, application United Kingdom, Jun. 5, 1979, 19622/79
Int. Cl.[3] D06P *67/00*
U.S. Cl. 8—527 — 10 Claims

1. A liquid dyestuff composition comprising
(a) 5–40% by weight of a dyestuff having the formula

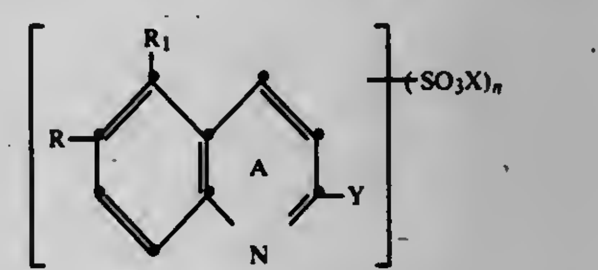

wherein X is hydrogen or an alkali metal cation, n represents 1 or 2, R_1 is a hydrogen atom and R is methyl or a dehydrothio-p-toluidine residue; or R and R_1 together are the atoms required to form a fused benzene ring, and Y is a residue having the formula

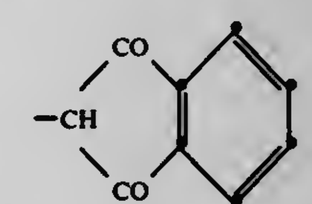

whereby ring A, the fused residue formed by R and R_1, or the residue Y can each be further substituted by one or more alkyl, alkoxy, hydroxy, carboxy or dehydrothio-p-toluidine groups or halogen atoms;
(b) 1–10% by weight of an alkali metal hydroxide;
(c) 45–75% by weight of a polyhydric alcohol or a water-soluble ether thereof; and
(d) 0–40% by weight of water.

4,300,902
COLORATION PROCESS
Herbert G. Connor, Bacup, England, assignor to Imperial Chemical Industries Limited, London, England
Filed Jun. 5, 1980, Ser. No. 156,795
Claims priority, application United Kingdom, Jan. 18, 1979, 21087/79
Int. Cl.³ D06P *3/82*
U.S. Cl. 8—529 **7 Claims**

1. A process for the colouration of cellulose or wool textile materials which comprises applying a dyestuff containing one or more s-triazinyl groups bearing a quaternary nitrogen substituent, or the precursors of such a dyestuff, in the absence of an acid-binding agent and heating the treated textile material to 150° C. or higher to fix the dyestuff to the cellulose or wool, the dyestuff being selected from the group consisting of

(a) dyestuffs of the formula:

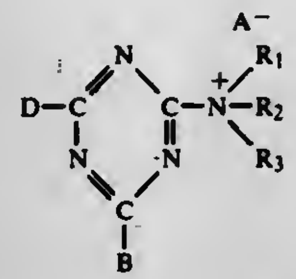

where D is a chromophoric group; A is Cl, Br or F; B is a substituent unreactive to cellulose and

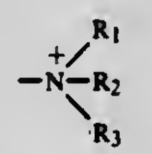

is derived from a tertiary amine selected from trimethylamine, triethylene diamine, pyridine, a methyl pyridine or a carboxy pyridine of the formula:

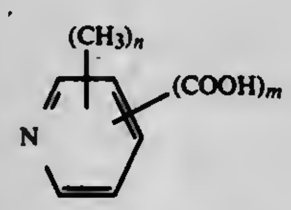

where n=0 or 1 and m=1 or 2, and

(b) dyestuffs derived from a halotriazinyl dyestuff of the formula:

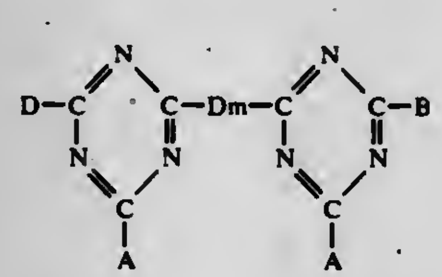

where A, B and D have the meanings given above and Dm is a diamine residue linking the triazine nuclei by its two amino groups, and from a tertiary amine as defined for dyestuff (a).

4,300,903
PADDING AUXILIARIES AND PROCESSES FOR DYEING CELLULOSE FIBERS OR MIXTURES OF CELLULOSE FIBERS AND SYNTHETIC FIBERS WITH SULPHUR DYESTUFFS, SULPHUR VAT DYESTUFFS, VAT DYESTUFFS AND REACTIVE DYESTUFFS
Friedrich Engelhardt, Frankfurt am Main; Karl-Heinz Keil, Offenbach am Main; Gerhard Weckler, Sulzbach, and Klaus Sternberger, Bad Vilbel, all of Fed. Rep. of Germany, assignors to Cassella Aktiengesellschaft, Frankfurt am Main, Fed. Rep. of Germany
Filed Jul. 23, 1980, Ser. No. 171,303
Claims priority, application Fed. Rep. of Germany, Jul. 28, 1979, 2930756
Int. Cl.³ D06P *3/60, 3/82*
U.S. Cl. 8—531 **11 Claims**

1. Padding auxiliary for dyeing cellulose or cellulose fiber/-synthetic fiber mixtures with sulphur dyestuffs, sulphur vat dyestuffs, vat dyestuffs or reactive dyestuffs, said auxiliary comprising an aqueous solution or dispersion containing

(a) 20 to 50 percent by weight of a mixture of 50 to 100 percent by weight of a compound of the following formula (Ia)

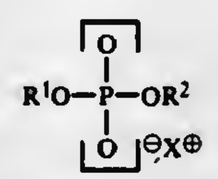

(Ia)

and 50 to 0 percent by weight of a compound of the following formula (Ib)

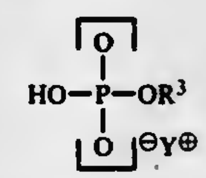

(Ib)

(b) b percent by weight of a compound of the formula

$$CH_3-(CH_2)_y-\underset{\substack{|\\ OSO_3^{\ominus}Z^{\oplus}}}{CH}-(CH_2)_z-CON\begin{matrix}R^4\\ R^5\end{matrix}$$

and

(c) c percent by weight of a compound of the formula

$$HO-(CH_2CH_2O)_m-(CH_2\underset{\substack{|\\ CH_3}}{CH}O)_n-(CH_2CH_2O)_p-H$$

wherein

b is a number from 0 to 5, c is a number from 0 to 5 and the numbers for b and c are chosen such that the sum of the numbers for b and c is a number from 1 to 10;

R^1, R^2 and R^3 are independently an aliphatic moiety with 5 to 12 carbon atoms or an araliphatic moiety with 7 to 13 carbon atoms;

$X^{\oplus}$, $Y^{\oplus}$ and $Z^{\oplus}$ is each independently an alkali metal cation, ammonium cation or a cation of an alkylamine or hydroxyalkylamine wherein the alkyl has 1-12 carbon atoms;

R^4 is an aliphatic moiety with 1 to 8 carbon atoms, phenyl, alkylphenyl with 7 to 10 carbon atoms or phenylalkyl with 7 to 10 carbon atoms;

R^5 is hydrogen or an aliphatic moiety with 1 to 8 carbon atoms, phenyl, alkylphenyl with 7 to 10 carbon atoms or phenylalkyl with 7 to 10 carbon atoms;

y and z are independently integers from 6 to 8;

n a number from 15 to 35;

m and p are the same number and their sum is a number from 2 to 120 with n and the sum of m and p being chosen such that

$$\frac{(m+p)\cdot 44}{(m+p)\cdot 44+n\cdot 58}=0.1 \text{ to } 0.8.$$

4,300,904
DYEING OF CELLULOSE-CONTAINING TEXTILES IN GLYCOL AND GLYCOL ETHER SOLVENTS
Eugene J. Blanchard, New Orleans, La., assignor to The United States of America as represented by the Secretary of Agriculture, Washington, D.C.
Filed Jul. 23, 1980, Ser. No. 171,626
Int. Cl.³ D06P *3/82*
U.S. Cl. 8—532 **8 Claims**

1. A method for dyeing cotton material in a glycol or a glycol ether solvent, said method comprising:

(a) treating the fabric with an aqueous solution containing a thiocyanate salt;

(b) dyeing the fabric with a direct or sulfur dye in a solvent selected from the group consisting of: propylene glycol, dipropylene glycol, polyethylene glycol with a molecular weight of about 400 to 600, ethylene glycol monomethyl ether, and methoxy polyethylene glycol with a molecular weight of about 120 to 550;

(c) rinsing the fabric with water to remove excess dye.

4,300,905
RAPID TEST FOR ASCORBIC ACID DETERMINATION
Manfred Bleisteiner; Walter Rittersdorf, and Hans Wielinger, all of Mannheim, Fed. Rep. of Germany, assignors to Boehringer Mannheim GmbH, Mannheim, Fed. Rep. of Germany
Filed May 15, 1980, Ser. No. 150,377
Claims priority, application Fed. Rep. of Germany, Jun. 28, 1979, 2926068
Int. Cl.³ G01N *33/82*
U.S. Cl. 23—230 B **15 Claims**

1. Rapid test device for the determination of ascorbic acid consisting of an absorbent carrier impregnated with a phosphomolybdate selected from alkali salts of 2,18-phosphomolybdic acid, an organic acid selected from aliphatic hydroxycarboxylic acids, and an alkali chlorate said device exhibiting a pH value of 2.5 to 5 when moistened with water.

4,300,906
METHOD FOR THE OPERATION OF AUTOMATED ANALYSIS APPARATUS
Kent M. Negersmith, Carmel, N.Y., assignor to Technicon Instruments Corp., Tarrytown, N.Y.
Filed Oct. 6, 1980, Ser. No. 194,320
Int. Cl.³ G01N *35/08*
U.S. Cl. 23—230 A **11 Claims**

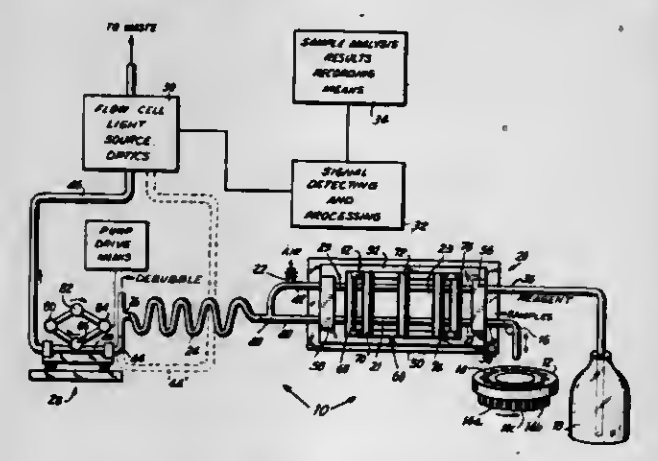

1. A method of treating a flowing stream wherein perturbations in flow and/or composition are periodically introduced, said perturbations having a fixed frequency, comprising the steps of:

(a) flowing said fluid stream along a conduit; and

(b) repeatedly treating said flowing stream in fixed relationship to the periodicity of said perturbations, so as to overcome the effects of said perturbations.

4,300,907
SERUM VITAMIN B_{12} ASSAY AND KIT THEREFOR
Lillian Mansbach, New City, and Henry McCarter, Pine Island, both of N.Y., assignors to Becton, Dickinson and Company, Paramus, N.J.
Filed Feb. 4, 1980, Ser. No. 118,583
Int. Cl.³ G01N *33/82, 33/58*
U.S. Cl. 23—230 B **32 Claims**

1. A process for the release of vitamin B_{12} from endogenous serum binders, comprising:

contacting serum containing vitamin B_{12} bound to endogenous binders therefor with a vitamin B_{12} releasing agent comprising a water miscible organic liquid solvent which does not destroy vitamin B_{12}, a reducing agent which does not destroy vitamin B_{12}, and cyanide ions, said releasing agent being employed in an amount effective to release vitamin B_{12} from endogenous binders therefor to thereby eliminate the necessity for heating the serum to heat releasing temperatures.

4,300,908
METHOD FOR THE DETERMINATION OF DOSAGE OF FREEZE CONDITIONING AGENTS ON COAL
Roger W. Kugel, Warrenville, Ill., assignor to Nalco Chemical Company, Oak Brook, Ill.
Filed Jun. 26, 1980, Ser. No. 163,022
Int. Cl.³ G01N *21/00*
U.S. Cl. 23—230 R **2 Claims**

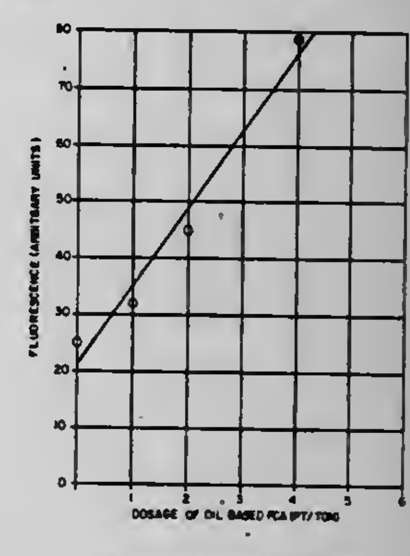

FLUORESCENCE DETECTION OF AN OIL BASED FCA IN HEPTANE EXTRACTS OF COAL

1. A method of determining the dosage of freeze-conditioning agents applied to coal which method comprises the following steps:

(a) collecting a sample of coal treated with a small amount of a freeze-conditioning agent containing a compatible fluorescent dye;

(b) extracting the treated coal with a solvent for the freeze-conditioning agent and determining the flurorescence of such extract;

(c) extracting a similar treated coal sample to which a known amount of the freeze-conditioning agent has been further added and determining the fluorescence of this extract;

(d) setting up a proportionality between the fluorescence values of extracts (b) and (c) with the corresponding dosages of freeze-conditioning agents and solving for the unknown dosage originally applied to the coal.

4,300,909
PROCESS CONTROL
Mark U. Krumhansl, 1811 Bent Twig, Tustin, Calif. 92680
Filed Aug. 22, 1980, Ser. No. 180,441
Int. Cl.³ G01N *1/14, 11/02, 33/18*
U.S. Cl. 23—230 A **23 Claims**

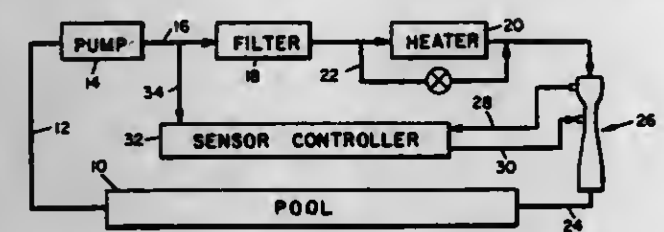

14. The method of processing fluid materials which comprises the steps of:
forcing said fluid material to flow through a differential pressure producing device which is fitted with and outlet port and a downstream inlet port;
interconnecting said ports through a flowpath such that a portion of said fluid material flows therethrough;
measuring the chemical state of the fluid flowing through said flowpath; and
subsequently introducing chemicals into said flowpath for a period bearing a selected relation to the measured chemical state of said fluid.

4,300,910
TEST VIAL CONSTRUCTION AND METHOD OF MEASURING GAS, VAPOR AND AEROSOL COMPONENTS IN AN AIR SAMPLE
Karl-Heinz Pannwitz, Lübeck, Fed. Rep. of Germany, assignor to Drägerwerk Aktiengesellschaft, Fed. Rep. of Germany
Filed Sep. 30, 1980, Ser. No. 192,552
Claims priority, application Fed. Rep. of Germany, Nov. 30, 1979, 2948218
Int. Cl.³ G01N *31/22, 21/78*
U.S. Cl. 23—232 R **4 Claims**

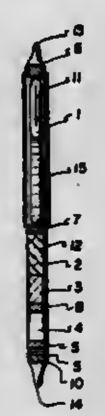

1. A method of measuring gas, vapor and aerosol components in an air or gas sample, using a gas detecting device which includes a glass tube having openable ends for the flow of gas therethrough, and through a filter therein which entrains components to be measured, and further including a reaction layer in the tube downstream of a breakable ampoule having a liquid solvent therein for dissolving the entrained substances, further including an empty chamber portion through which the solvent liquid is directed after passing through the reaction layer in the tube, and further including a liquid lock downstream of the empty chamber portion, comprising, opening the tube to pass the gas to be tested therethrough and to entrain in the filter, particles of components to be measured, breaking the ampoule in the tube to direct a solvent through the filter to dissolve the entrained particles and directing the entrained particles and solvent through the reaction layer to achieve a color indication, and retaining the material having the color indication in the empty tank chamber using the liquid lock to prevent the escape thereof.

4,300,911
METHOD FOR PREPARING CRYSTALLINE SiO_2 MODIFICATION
Laszlo Marosi, Ludwigshafen; Joachim Stabenow, Weinheim, and Matthias Schwarzmann, Limburgerhof, all of Fed. Rep. of Germany, assignors to BASF Aktiengesellschaft, Fed. Rep. of Germany
Filed Feb. 27, 1980, Ser. No. 124,988
Claims priority, application Fed. Rep. of Germany, Mar. 14, 1979, 2909930
Int. Cl.³ C01B *33/12;* B01D *9/00*
U.S. Cl. 23—300 **5 Claims**

1. A process for the preparation of a crystalline SiO_2-modification characterized by an X-ray diffraction diagram which exhibits at least the following diffraction lines:

d (A)	I
11.60	36
10.02	15
5.80	11
4.18	100
3.87	79
2.84	16

which process comprises heating a mixture of a reactive amorphous SiO_2 in an aqueous solution of hexamethylenediamine at a temperature of from 100° to 200° C. for from 0.5 to 50 days, to effect crystallization of the SiO_2 to said crystalline SiO_2-modification.

4,300,912
SYNTHETIC FUEL CONTAINING METHANOL AND BUTANOL
David J. Townsend, Wheaton, Ill., assignor to Union Carbide Corporation, New York, N.Y.
Filed Oct. 7, 1980, Ser. No. 194,774
Int. Cl.³ C10L *1/18*
U.S. Cl. 44—56 **12 Claims**

1. A synthetic fuel comprising
20 to 40 percent by volume butanol,
10 to 40 percent by volume methanol,
20 to 60 percent by volume heavy hydrocarbon, and
0.0001 to 0.001 pound of a colloid stabilizer per gallon of the remaining constituents.

4,300,913
APPARATUS AND METHOD FOR THE MANUFACTURE OF PRODUCT GAS
Klaus Egert; Wolfgang Heinrich; Klaus Lucas; Klaus-Otto Kuhlbrodt, all of Frieberg; Friedrich Berger, Brand-Erbisdorf; Peter Göhler, Freiberg; Manfred Schingnitz, Freiberg; Manfred Gross, Freiberg, all of German Democratic Rep.; Aleksander Jegorow; Vasilij Fedotov; Vladimir Gavrilin; Ernest Gudymov; Vladimir Semenov; Igol Achmatov, all of Moskwa; Nikolaj Majdurov, Moskovsk, and Evgenij Abraamov, Moskwa, all of U.S.S.R., assignors to Brennstoffinstitut Freiberg, Freiberg, German Democratic Rep. and Gosudarstwennyi Nautschno Issledowatelskij I Projektnyi Institut Asotnoj Promuschlennosti I Produktow Organitschekogo Sintesa, Moscow, U.S.S.R.
Filed Dec. 18, 1979, Ser. No. 104,892
Int. Cl.³ C10J *3/72*
U.S. Cl. 48—67 **4 Claims**

1. In a method of producing gas in a reactor by oxidation of finely divided fuel with concomitant formation of liquid slag, the steps of discharging from the reactor a stream of the product gas and a stream of liquid slag which travels within and is surrounded by the stream of product gas; passing the streams downwardly into a vessel through a straight central passage of a vertical doublewalled discharge tube having an annular clearance between its walls and also having a lower open end immersed in a water bath in the vessel; circulating a cooling liquid in counterflow to the streams through the annular clearance; admitting said cooling liquid at an upper end portion of the discharge tube from the annular clearance onto an inner

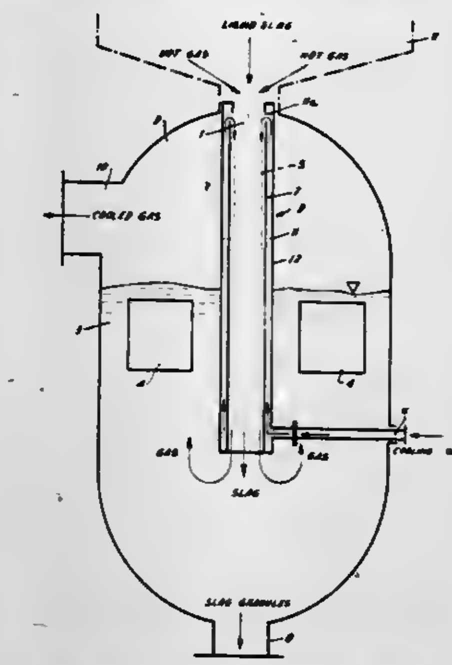

surface of the discharge tube, for gravity descent on and along the inner surface as a liquid film which prevents local overheating or destruction of the tube; discharging the slag, which becomes cooled and granulated on entry into the water bath, from a lower part of the vessel; cooling the product gas during ascent of the same through the water bath from the lower open end of the discharge tube; and discharging the cooled product gas from an upper part of the vessel.

4,300,914
METHOD AND APPARATUS FOR GASIFYING WITH A FLUIDIZED BED GASIFIER HAVING INTEGRATED PRETREATING FACILITIES
Louis F. Rice, Arcadia, Calif., assignor to The United States of America as represented by the United States Department of Energy, Washington, D.C.
Filed Mar. 20, 1980, Ser. No. 132,357
Int. Cl.³ C10J *3/68*
U.S. Cl. 48—76 **23 Claims**

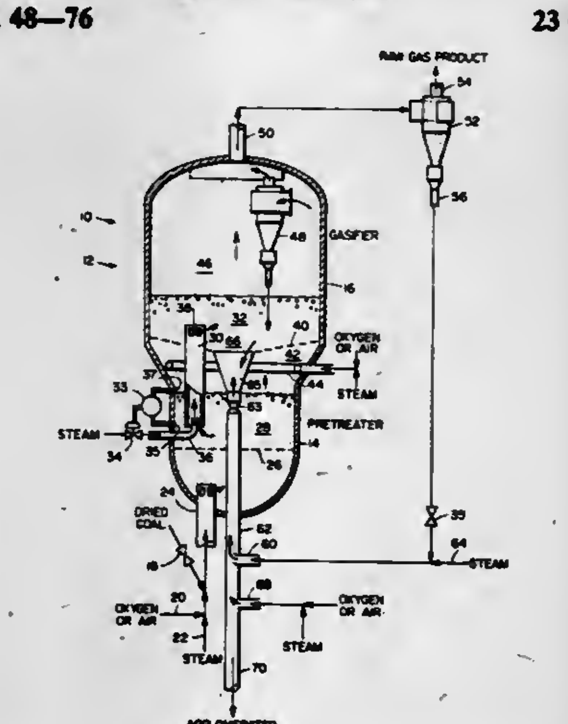

11. A method for gasifying carbon-containing solid in a single vessel comprising a pretreater section and a gasifier section arranged substantially vertically over said pretreater with a grid between said sections, said method comprising the steps of:
introducing carbon-containing solid into a pretreater section of a gasifier;
introducing an oxygen-containing gas into the pretreater section to pretreat carbon-containing solid;
introducing gases from said pretreater to said gasifier through said grid;
lifting pretreated carbon-containing solid from the pretreater section into the gasifier section through a lift pipe which is located within said single vessel and which extends from the bed of solids in the pretreater into said gasifier section; and
regulating the rate of flow of carbon-containing solid from the pretreater section into the gasifier section in order to selectively control the residence time of carbon-containing solid in the pretreater section.

4,300,915
PROCESS FOR THE PYROLYSIS OF REFUSE
Rudiger Schmidt; Franz Steininger, and Klaus Hillekamp, all of Munich, Fed. Rep. of Germany, assignors to Babcock Krauss-Maffei, Munich, Fed. Rep. of Germany
Continuation-in-part of Ser. No. 57,263, Jul. 13, 1979, abandoned, which is a continuation-in-part of Ser. No. 957,989, Nov. 16, 1978, abandoned. This application Apr. 3, 1980, Ser. No. 136,900
Claims priority, application Fed. Rep. of Germany, Nov. 15, 1977, 2751007; Jun. 9, 1978, 2825429
Int. Cl.³ C10J *3/00*
U.S. Cl. 48—197 R **8 Claims**

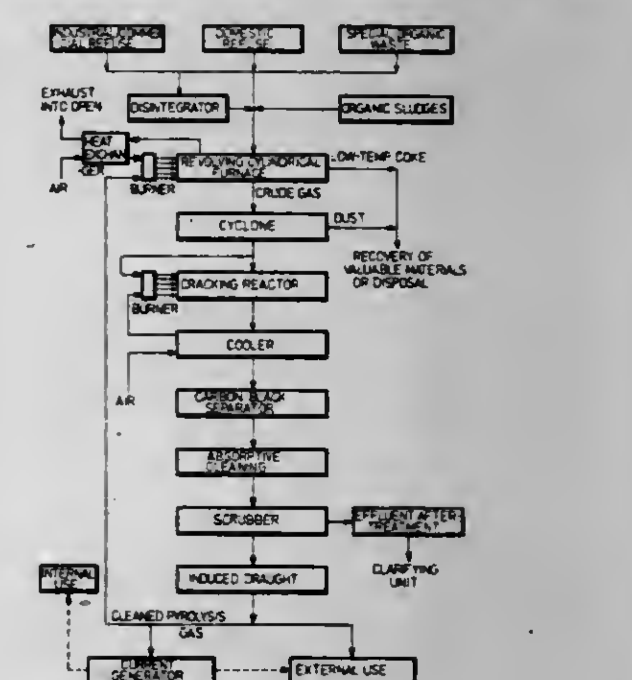

1. A process for the pyrolysis of refuse comprising:
(a) subjecting the refuse to carbonisation in a rotary kiln in the substantial absence of air to produce raw carbonisation gases at a temperature of between about 300° and 450° C. and at a calorific value of between 1000 and 3500 kcal/-standard cubic meter (moist), and solid residues;
(b) separating said raw carbonisation gases from said solid residues;
(c) dividing said raw carbonisation gases into a first part comprising between about one-fifth and one-half of the total amount and a second part comprising between about one-half and four-fifths of the total amount of said raw carbonisation gases;
(d) completely burning said first part of the raw carbonisation gases to produce hot flue gases with a solid carbon content of less than 50 mg/standard cubic meter;
(e) mixing said hot flue gases with said second part of the

raw carbonisation gases to obtain a cracking temperature of between about 900° and 1100° C.;

(f) feeding said mixture of gases through a free-flow, noncatalytic reactor at a pressure of between about 0.7 and 1.2 atm, a velocity of between about 1 and 30 meters per second, and a residence time of between about 0.5 and 3 seconds to crack the long chain organic constituents in said mixture of gases,

(g) the cracking temperature being so selected that for a predetermined residence time the content of condensable organic compounds in the cracked gases is less than 0.2 g/standard cubic meter,

(h) the division of said raw carbonisation gases being so selected that for a predetermined calorific value of said raw carbonisation gases said selected cracking temperature is obtained; and

(i) cooling said cracked gases to a temperature just above their dew point at a rate of at least 125° C. per second.

4,300,916

METHOD AND APPARATUS FOR THE GASIFICATION OF COAL

Hans Frewer, Marloffstein; Rainer Müller, and Ulrich Schiffers, both of Erlangen, all of Fed. Rep. of Germany, assignors to Kraftwerk Union Aktiengesellschaft, Mülheim, Fed. Rep. of Germany

Filed Feb. 28, 1980, Ser. No. 125,526

Claims priority, application Fed. Rep. of Germany, Mar. 6, 1979, 2908772

Int. Cl.³ C10J *3/46, 3/00*

U.S. Cl. 48—210 **6 Claims**

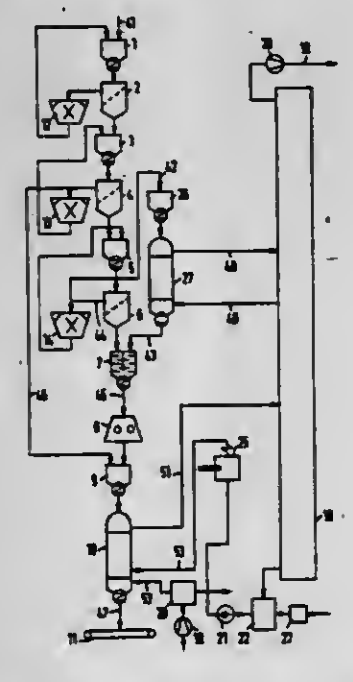

1. Method for the gasification of coal to convert volatile and readily reactive components in coal into hydrocarbons composed principally of CH_4 with lesser amounts of C_2H_6 and other hydrocarbons by the addition of hydrogen, and generating a hydrogen-containing gas by the addition of steam, comprising forming from the coal two grain fractions, a coarse fraction and a fine fraction, subjecting a portion of the fine fraction of the coal to hydrogenation in a hydrogenation zone in the presence of added hydrogen at an elevated temperature about 700° C. to produce principally gaseous constituents containing hydrocarbons and a non-vaporous residual coke component containing principally carbon and ash, releasing the gaseous constituents from the hydrogenation zone, discharging the hot residual coke component from the hydrogenation zone, mixing the hot residual coke with another portion of said fine fraction of the coal, pressing said mixture to produce briquets, subjecting said briquets together with a coarse fraction of coal to steam gasification in a steam gasification zone in the presence of added steam at an elevated temperature to generate a hydrogen-containing gas leaving as residue an ash containing principally non-combustible material, releasing the hydrogen-containing gas from the gasification zone, and discharging the ash from the gasification zone.

4,300,917

METHOD FOR PREVENTING ADHESION OR CAKING OF HYDROCARBON-CONTAINING RAW MATERIALS

Christian Koch, and Alfred Behrmann, both of Erlangen, Fed. Rep. of Germany, assignors to Kraftwerk Union Aktiengesellschaft, Mülheim, Fed. Rep. of Germany

Division of Ser. No. 18,410, Mar. 7, 1979, Pat. No. 4,233,036. This application May 6, 1980, Ser. No. 147,154

Claims priority, application Fed. Rep. of Germany, Mar. 30, 1978, 2813765

Int. Cl.³ C10G *45/00*

U.S. Cl. 48—213 **2 Claims**

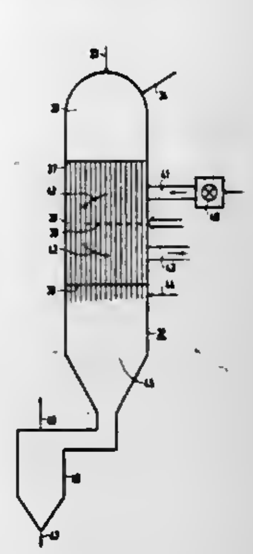

1. A method of preventing adhesion or caking of normally liquid hydrocarbon-containing raw materials including residual oil which in the presence of hydrogen are partially gasified by hydrogenation gasification in a reaction vessel through which the raw material passes while being heated to a temperature above 700° K., which comprises passing raw materials in particle form downwardly through the reaction vessel, introducing a hydrogen-containing gas at a temperature above 700° K. in admixture with the raw materials to heat the raw materials to a temperature above 700° K. and to effect hydrogenation gasification of part of the raw materials, contacting the particles of raw materials as they pass downwardly through the reaction vessel in a temperature zone of about 600° to 700° K. with a medium which is at a temperature above 1000° K. to rapidly heat the surfaces of raw material particles to above 700° K. by direct contact with the hot medium alone, in the absence of combustion of raw materials with added oxygen to cause the raw material particles to become noncaking in its downward passage through the reaction vessel at a temperature above 700° K. wherein the medium for rapidly heating the surfaces of the raw material particles is heat exchanger tubes heated by a heating gas flowing in parallel flow and in indirect heat exchange with the raw material particles and wherein at least a portion of the hydrogen-containing gas is introduced in admixture with the raw materials prior to passing in contact with the heat exchanger tubes.

4,300,918

METHOD FOR REMOVING MOISTURE PARTICLES

Boyd Cary, Fairfax, Va., assignor to Parmatic Filter Corporation, Livingston, N.J.

Continuation-in-part of Ser. No. 903,560, May 8, 1978, abandoned. This application Mar. 10, 1980, Ser. No. 128,930

Int. Cl.³ B01D *50/00, 39/12*

U.S. Cl. 55—1 **7 Claims**

1. A method of removing particles entrained in air, the air including particles of moisture, the method comprising the steps of:

passing the air at a velocity greater than 20 feet per second through an inertia separating means for inertially removing at least a portion of the larger sized particles from the air to provide partially processed air; and

passing the partially processed air at a velocity which is greater than a predetermined velocity through an impact filtering pad for removing particles entrained in said partially processed air, said impact filtering pad comprising at

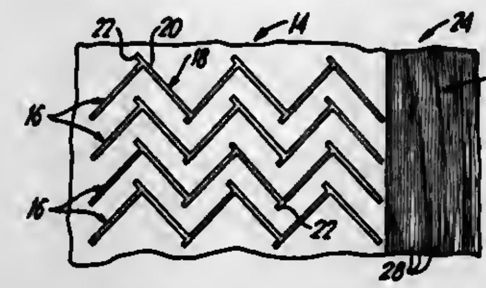

least one layer of a plurality of fibers, each of said fibers having a diameter greater than 0.001 inches and less than 0.006 inches, and the ratio of total surface area of said fibers in said pad to the volume of said pad being greater than 45 ft.$^{-1}$ and less than 1400 ft.$^{-1}$, and said predetermined velocity being greater than 20 feet per second and chosen according to the diameter of said fibers of said impact filtering pad so that there is no coalescence of moisture particles captured by said impact filtering pad.

4,300,919

APPARATUS AND METHOD FOR DESORPTION OF GAS FROM A LIQUID

Geoffrey A. Lewis, and Harry S. Bottoms, both of Solihull, England, assignors to Lucas Industries Limited, Birmingham, England

Filed Nov. 28, 1979, Ser. No. 98,048

Claims priority, application United Kingdom, Dec. 6, 1978, 47330/78

Int. Cl.³ B01D *19/00*

U.S. Cl. 55—48 **6 Claims**

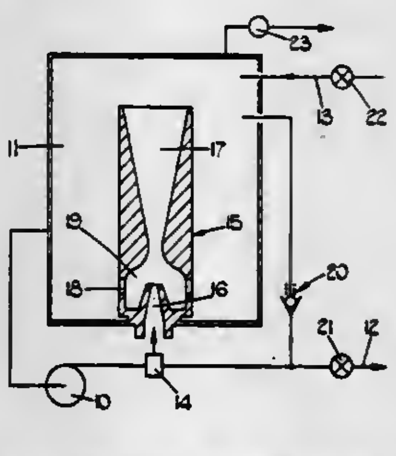

1. A method of desorbing gas from a liquid, comprising withdrawing liquid from a storage chamber by means of a pump, supplying a part of the liquid discharged by said pump to the nozzle of an aspirator whose outlet communicates with said chamber and which has an aspiration inlet communicating with said outlet by way of said chamber, supplying the remainder of said liquid discharged by said pump to an external circuit, and returning said remainder of the liquid from said external circuit to said storage.

2. An apparatus for desorption of gas from a liquid, comprising a first storage chamber for said liquid, a pump for withdrawing liquid from said chamber, an aspirator having a nozzle to which liquid can be delivered by said pump, an aspiration inlet communicating with said chamber, and an outlet, said chamber providing a flow path through which liquid can flow from said outlet to said inlet, first and second passages through which liquid can flow in parallel from said pump to said aspirator nozzle and to an external circuit, means for supplying to said chamber liquid returned from said external circuit, said means for supplying liquid to said first chamber comprising a second chamber communicating with said first chamber adjacent said aspirator inlet, and means for permitting liquid flow from said aspirator to pass from said first chamber to said second chamber.

4,300,920

STACK GAS REHEATER SYSTEM

Edward E. Grove, Tulsa, Okla., assignor to Tranter, Inc., Tulsa, Okla.

Filed Jun. 29, 1979, Ser. No. 53,318

Int. Cl.³ B01D *47/00*

U.S. Cl. 55—84 **1 Claim**

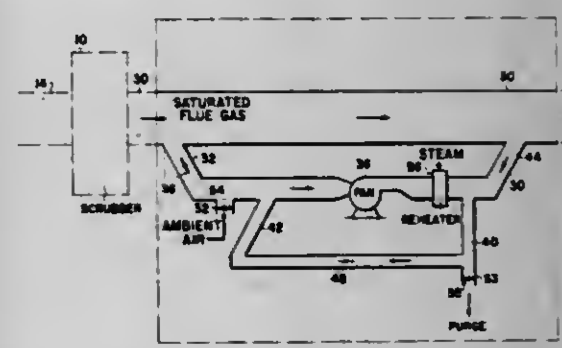

1. In the method of treating combustion or flue gas which results from the burning of coal or similar fuel in a boiler wherein the flue gas is passed through a wet scrubber and proceeds in a saturated condition as a flue gas stream to an exhaust fan and thence up a stack, and wherein a reheat heat exchanger is employed to heat the saturated flue gas subsequent to its treatment in the wet scrubber but prior to its introduction to the exhaust fan whereby the flue gas is heated to a sufficiently high temperature above its dew point that condensation is prevented in the exhaust fan and in the stack with a consequent elimination or reduction of corrosion in the fan and stack, the improvement which comprises heating at least a portion of the flue gas stream slightly above its dew point subsequent to its passage through the wet scrubber and prior to its passage through the reheat heat exchanger to prevent any condensation from the flue gas stream in the reheat heat exchanger, wherein a portion of the flue gas stream is withdrawn as a side stream from the flue gas stream at a location subsequent to the passage of the flue gas stream through the wet scrubber and prior to the passage of the flue gas stream to the exhaust fan, heating the side stream by locating the reheat heat exchanger in the side stream, inserting a separate fan in the side stream between said first location and said reheat heat exchanger to force the side stream through said reheat exchanger, by-passing a portion of the side stream immediately downstream from said reheat heat exchanger and back to the upstream side of said separate fan to add heat to the side stream whereby the side steam is maintained slightly above its dew point prior to its passage through said reheat heat exchanger, and reintroducing the side stream into the flue gas stream at a second location positioned downstream from said first location and prior to the introduction of the flue gas stream to the exhaust fan, wherein, for shut down purposes, a stream of ambient air is introduced to the side stream between said first location and said fan while simultaneously preventing the flow of flue gas into the side stream until the side stream is purged of flue gas.

4,300,921

APPARATUS AND METHOD FOR REMOVING FINELY DIVIDED SOLIDS FROM GASES

Denis G. Littrell, Anchorage, Ky., assignor to Rexnord, Inc., Milwaukee, Wis.

Filed Mar. 4, 1980, Ser. No. 127,197

Int. Cl.³ B01D *46/04*

U.S. Cl. 55—96 **38 Claims**

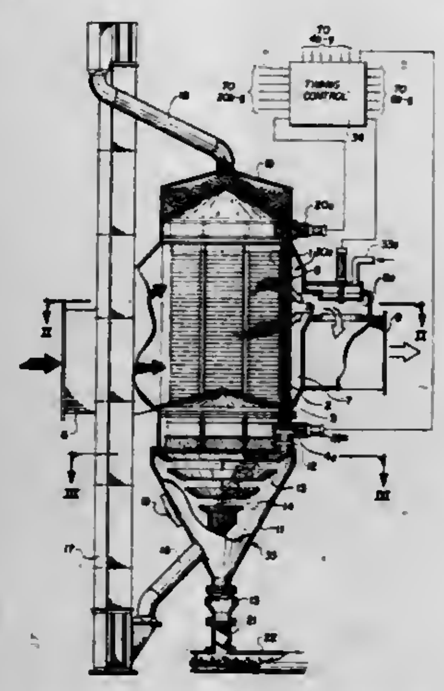

32. A process for removing particulate material entrained in a gaseous stream, comprising the steps of:
- conveying a particulate material-contaminated gas through at least a first filter bed of granular filter media, whereby the particulate material becomes trapped in the granular filter media;
- removing the granular filter media containing trapped particulate material from the filter bed;
- separating trapped particulate material from the granular filter media removed from the filter bed, said separating step comprising cascading the granular filter media down a plurality of surfaces, said surfaces being sufficiently hard that the granular filter media will bounce upon impact with said surfaces due to the force of gravity, said surfaces being inclined with respect to the vertical and being spaced from one another vertically in such a way that the surface first impacted by the granular filter media is located uppermost and each subsequent surface is located at a progressively lower position and said surfaces also being spaced from one another horizontally in such a way that granular filter media discharged thereon will cascade downwardly by bouncing from surface to surface whereas particular material accompanying the granular filter media will fall into the horizontal spaces between said surfaces;
- collecting the separated granular filter media at the bottom of the plurality of surfaces;
- returning the collected granular filter media to the filter bed; and
- collecting the particulate material separated from the granular filter media.

4,300,922

INSULATING CURRENT FEED-THROUGH

Otto Gilpner, Offenbach, Fed. Rep. of Germany, assignor to Metallgesellschaft Aktiengesellschaft, Frankfurt am Main, Fed. Rep. of Germany

Filed May 8, 1980, Ser. No. 147,576

Claims priority, application Fed. Rep. of Germany, May 10, 1979, 2918804

Int. Cl.³ B03C *3/70;* **H01B** *17/28*

U.S. Cl. 55—146 **9 Claims**

1. In a high-temperature, high-pressure electrostatic precipitator having a housing formed with an opening in a wall, the improvement which comprises an insulating current feed-through assembly capable of maintaining the pressure in said housing even upon breakage of assembly parts, said assembly comprising:
- an annular flange surrounding said opening;
- a pair of pressure-resistant cup-shaped elements opening toward one another and having rims juxtaposed with opposite sides of said flange;
- a pair of rigid, heat-resistant, pressure-resistant ceramic insulating rings having grooves opening in opposite directions and receiving the respective rims while being braced against opposite sides of said flange, each of said grooves

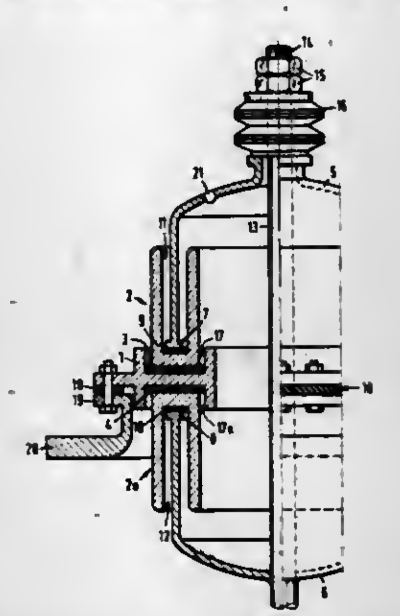

in cross section being defined by a pair of annular arms reaching away from said flange to receive the respective cup-shaped element, each ring having an inner one of said arms extending axially along the respective cup-shaped element inwardly thereof and an outer one of said arms extending axially along the exterior of the respective cup-shaped element;
- a conductor traversing said cup-shaped elements and surrounded by said rings while extending through said opening into said housing; and
- means for retaining said elements on said conductor for bracing said elements in opposite directions against said rings and said flange.

4,300,923

DEAERATOR SYSTEM HAVING POSITIVE PRESSURE INDICATING MEANS

Sigmund P. Skoli, Elmwood; Robert J. Dulian, Chicago, and David M. Kemp, Naperville, all of Ill., assignors to Mojonnier Bros. Co., Chicago, Ill.

Filed Apr. 7, 1980, Ser. No. 138,103

Int. Cl.³ B01D *19/00;* **B01F** *3/04*

U.S. Cl. 55—196 **10 Claims**

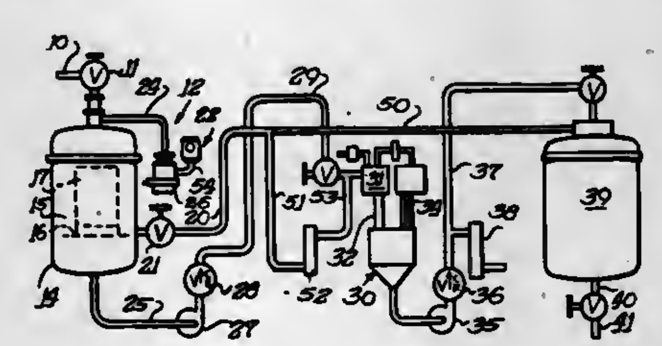

1. An improved deaerator system for purging air from water comprising: container means for containing the water, input means for establishing a positive gas pressure within the container, a first conduit leading from the container at a point above the normal level of water in the container and having a distal end extending in a substantially downward direction, a substantially downwardly extending check valve connected in fluid communication with the first conduit distal end, the check valve including an upstream sleeve, a downstream sleeve, an annular valve seat member disposed between the upstream sleeve and the downstream sleeve, valve head guide means extending from the valve seat, a valve head carried by the guide means, and biasing means for urging the valve head into seating, valve-closed engagement with the valve seat under normal conditions but permitting the valve head to open in a downstream direction away from the valve seat in response to excessive pressure experienced in the upstream sleeve, the system further including positive fluid pressure indicator means having an indicator housing, a second conduit providing fluid communication from a point located on and in the check valve upstream sleeve but spaced apart from the valve seat, to the valve housing bottom, the housing having a substantially vertically disposed through-bore communicating at its bottom with the second conduit, a seat being formed within said through-bore, the indicator means further including an indicating element disposed within said bore, said indicating means being arranged to engage the through-bore seat in the absence of positive pressure within the container means and through-bore, and to disengage said seat and rise in said through-bore in response to positive pressure within the container means and the check valve upstream sleeve, the indicating element being viewable through the housing when disengaged from the seat to provide a readily discernable indication of positive pressure within the container means, and being weighted to rise from the through-bore seat in response to a pressure which is less than that required to unseat the check valve head from its valve-closed position on the check valve seat.

4,300,924

EXHAUST GAS SCRUBBER FOR INTERNAL COMBUSTION ENGINES

Charles F. Coyle, Portland, Oreg., assignor to Paccar Inc., Bellevue, Wash.

Filed Mar. 24, 1980, Ser. No. 132,855

Int. Cl.³ B01D *47/00;* **F01N** *3/04*

U.S. Cl. 55—210 **17 Claims**

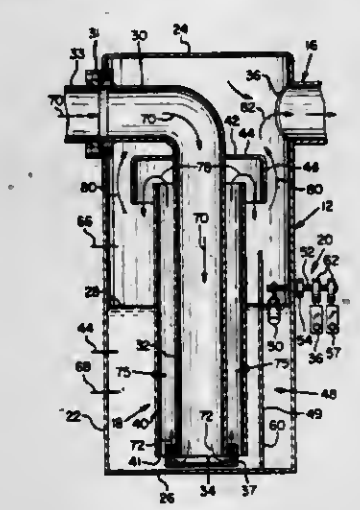

1. An exhaust gas scrubber comprising:
- a scrubber tank;
- an exhaust gas inlet tube for conducting hot, dirty exhaust gases downwardly into the tank to an outlet opening;
- a mixing tube surrounding a portion of the inlet tube to define a mixing chamber between said tubes, the mixing tube extending above and below a liquid level in said tank;
- a deflector for reversing the flow of gases emitted from said opening to deflect said flow upwardly into the mixing chamber, the deflector including wall means extending upwardly into the mixing chamber and spaced between the mixing tube and inlet tube to define aspirator means for aspirating scrubbing liquid into the mixing chamber to intermix with, cool and cleanse said gases;
- means for separating the liquid from the gases; and
- an exhaust gas outlet for exhausting cooled, cleansed gases from said tank;
- the mixing tube having a downwardly open lower end positioned near the bottom of the scrubber tank.

7. An exhaust gas scrubber comprising:
- a scrubber tank containing a pool of scrubbing liquid;
- an exhaust gas inlet tube for conducting hot, dirty exhaust gases downwardly into the tank to an outlet opening;
- a mixing tube surrounding a portion of the inlet tube to define a mixing chamber between said tubes, the mixing tube extending above and below the liquid level in said tank;
- means for directing the flow of gases from said outlet opening upwardly into the mixing chamber and means for aspirating scrubbing liquid into the mixing chamber to intermix with, cool and cleanse said upwardly flowing gases;
- means for separating the liquid from the gases; and
- an exhaust gas outlet for exhausting cooled, cleansed gases from said tank;
- said means for separating the liquid from the gases including a deflector hood surrounding the exhaust inlet tube above an open upper end of said mixing tube, said hood being constructed and arranged for reversing the upward flow of exhaust gases and scrubbing liquid from said mixing chamber to deflect said flow downwardly into the pool of scrubbing liquid to separate the liquid from the cooled, cleansed gases;
- said tank having outer side wall means spaced outwardly from the deflector hood to define a passageway therebetween so that the cooled, cleansed gases can flow freely around the deflector hood to the exhaust gas outlet;
- the cross-sectional area of the passageway being such that the velocity of gases flowing upwardly around the deflector hood is below a velocity at which the gases would carry liquid droplets upwardly to the exhaust gas outlet.

4,300,925

GAS PURIFYING FILTER

Gennady A. Nikandrov, ulitsa Firsova, 2, kv. 56; Alexandr A. Alovyainikov, ulitsa Firsova, 2, kv. 10; Ljudmila V. Varlamova, ulitsa Chkalova, 8, kv. 30; Alexandr I. Vulikh, ulitsa Firsova, 2, kv. 64; Jury P. Lopatin, ulitsa Uritskogo, 21, kv. 46; Vladimir A. Tikhomirov, Vesennaya ulitsa, 4, kv. 64; Vera A. Chebukhanova, ulitsa Velikanova, 7, korpus 1, kv. 17; Pavel S. Preobrazhensky, ulitsa Firsova 2, kv. 107; Viktor E. Spiridonov, Vysokovoltnaya ulitsa, 31, korpus 2, kv. 27; Alexandr G. Zhelonkin, ulitsa Ostrovskogo, 40, korpus 1, kv. 150, and Rudolf P. Varlamov, ulitsa Chkalova, 8, kv. 30, all of Ryazan, U.S.S.R.

Filed Jul. 11, 1980, Ser. No. 167,917

Int. Cl.³ B01D *46/04*

U.S. Cl. 55—242 **4 Claims**

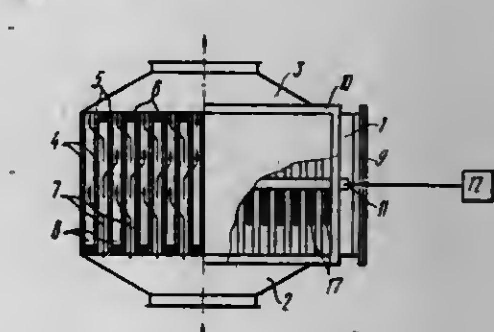

1. A gas purifying filter, comprising:
- a housing;
- a gas inlet stub arranged on a side wall of the housing;
- a gas outlet stub arranged on a side wall of the housing;

stationary filtering elements fabricated from fibrous chemisorbing material, said elements constituting rectangular plates formed of said fibrous chemisorbing material and rigidly secured inside said housing, positioned vertically and arranged in parallel with one another, each of said rectangular plates having opposed side edges and an upper section;
a first plurality of partitions connecting said side edges of alternate adjacent pairs of said rectangular plates therebetween so as to provide an opening for the passage of gas between the plates essentially opposite the partition connecting said side edges of an adjacent pair of said rectangular plates; and
liquid compartments overlying said rectangular plates, the liquid serving to regenerate said stationary filtering elements, each of said compartments defining a space communicating with said upper sections of said fibrous plates and such that the liquid directed into said compartments contacts only said upper sections of said rectangular fibrous plates.

4,300,926
SEPARATION APPARATUS
Derrick W. Brooks, 18 Ridge La., Radcliffe-on-Trent, Nottingham, NG12 1BD, England
Continuation of Ser. No. 4,041, Jan. 17, 1979. This application Mar. 31, 1980, Ser. No. 135,790
Claims priority, application United Kingdom, May 5, 1978, 4564/78
Int. Cl.³ B01D *50/00*
U.S. Cl. 55—319 **3 Claims**

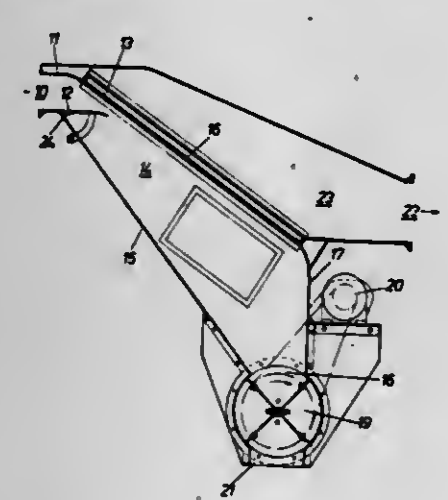

1. Apparatus for continuously separating air-borne material, comprising:
an inlet for air-borne material;
an outlet for separated product;
a duct connecting said inlet to said outlet and increasing in a cross-sectional area away from said inlet, the axis of the duct being angular with respect to the inlet;
screen means arranged to form at least one upper wall of said duct for removing air from within said duct;
a lower wall of said duct opposite said screen joining the inlet and defining a first angle with said screen to form said increasing cross-sectional area for decelerating incoming air-borne material to separate material from incoming air;
the inlet having an inlet axis intersecting said screen at a second angle;
an adjustable baffle hingedly fixed to the said lower wall and forming a portion of said inlet for directing air-borne material onto said screen at an angle effective to form an air flow boundary layer adjacent said screen which precludes said air-borne material from contacting said screen while permitting air removal through said screen.

4,300,927
POCKET FILTER ARRANGEMENT
Charles E. Day, Jeffersonville, Ind., assignor to American Air Filter Company, Inc., Louisville, Ky.
Filed Oct. 31, 1980, Ser. No. 202,568
Int. Cl.³ B01D *46/02*
U.S. Cl. 55—378 **8 Claims**

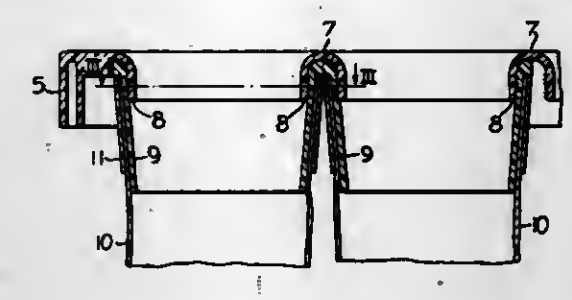

1. A pocket filter cartridge for removing particulate solids from a dirty gas stream, comprising:
a relatively flat, sheath-like filter bag open at one end;
a header plate carrying the filter bag and being adapted to be secured across the dirty gas stream, said plate including an aperture opening into the open end of the filter bag and a projecting lip forming the marginal edge of the plate aperture;
a flow-through mounting member disposed in the open end of the filter bag;
a retaining collar cooperating with the mounting member sized to surround the filter and secure it between the mounting member in press-fit clamping relation;
a shoulder on said mounting member surroundingly engaging said projecting lip to align the filter bag in flow-through communication with the plate aperture; and
fastening means comprising a first serrate edge about the exterior periphery of said projecting lip and a second serrate edge about the interior periphery of said shoulder cooperating with said first serrate edge to secure the mounting member to the header plate.

4,300,928
STRUCTURE FOR SUPPORTING AIR FILTER
Hiromichi Sugie, Nagoya; Hajime Akado, Anjo; Akira Yamashita, Kariya, and Yasuhiko Nakamura, Toyohashi, all of Japan, assignors to Nippondenso Co., Ltd., Kariya, Japan
Filed May 5, 1980, Ser. No. 146,249
Claims priority, application Japan, May 18, 1979, 54-66984
Int. Cl.³ B01D *46/00*
U.S. Cl. 55—385 R **5 Claims**

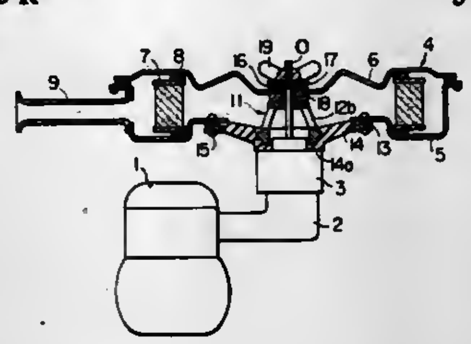

1. In a structure for supporting an air filter on a carrier member of the air intake of an internal combustion engine, said air filter having a casing accommodating an air filtration element and being provided with top and bottom openings and a detachable cap to close the top opening, said cap being adapted to be centered and fixed by a center bolt extending upwardly from said carrier member, the improvement in said support structure comprising:
a first disc-like resilient member having a central opening and closing said bottom opening of said casing, the marginal edge portion of said resilient member about said central opening thereof being adapted to intimately contact said carrier member to provide a seal between said air filter and said carrier member;
a metal ring plate attached to the periphery of said resilient member and fixed to said casing about said bottom opening thereof;
a supporting member in said casing having one end thereof fixed to said resilient member about the periphery of said central opening thereof; and
a second resilient member secured to said cap and engaging an opposite end of said supporting member.

4,300,929
METHOD FOR FORMING GLASS FIBERS
Grant F. Carruth, Granville; Michael T. Pellegrin, Newark, both of Ohio; Russell R. Felch, and Donald R. Atkinson, both of Aiken, S.C., assignors to Owens-Corning Fiberglas Corporation, Toledo, Ohio
Filed Sep. 24, 1979, Ser. No. 78,356
Int. Cl.³ C03D *37/025*
U.S. Cl. 65—2 **8 Claims**

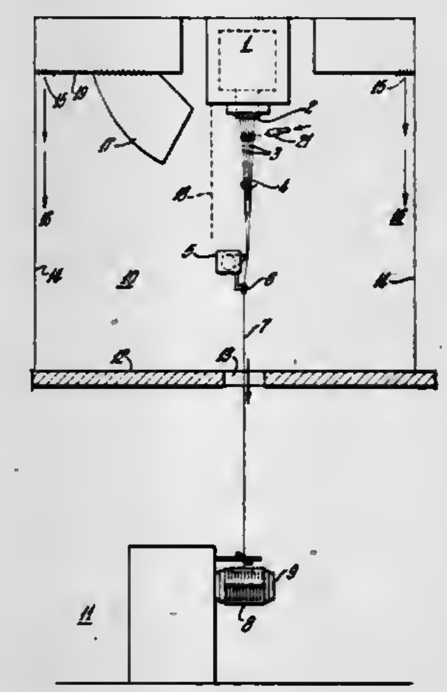

1. In the process of producing continuous glass fibers in which streams of glass are attentuated as filaments from a bushing positioned within a forming zone, the filaments are passed through pre-pad sprays and sized by a size applicator and gathered by a gathering shoe, the improvement comprising introducing from about 200 to about 600 CFM of air into contact with the filaments over the length of the filaments extending from the bottom of said bushing to said pre-pad sprays and introducing from about 100 to about 300 CFM of air into contact with the filaments over the length of the filaments extending from the pre-pad sprays to said gathering shoe, the air quantities being introduced angularly downward from the horizontal.

4,300,930
MINIMUM DISPERSION AT 1.55 μM FOR SINGLE-MODE STEP-INDEX OPTICAL FIBERS
Ching T. Chang, San Diego, Calif., assignor to The United States of America as represented by the Secretary of the Navy, Washington, D.C.
Filed Oct. 31, 1980, Ser. No. 202,848
Int. Cl.³ C03B *37/075;* **G02B** *5/14*
U.S. Cl. 65—3.11 **3 Claims**

1. A method of fabricating a step-index single-mode optical fiber that provides minimum total dispersion by achieving first order cancellation between material and waveguide dispersions at 1.55 μm comprising:
providing a core material and cladding material having a refractive index difference Δ, the core material having a refractive index that creates minimum material dispersion at other than 1.55 μm and

TABLE I λ_0 represents the optimum wavelength where the first order dispersion ($dN/d\lambda$) is zero. T and V are the second order residual dispersion and the normalized frequency evaluated at λ_0. $\delta\lambda$ is the shift in optimum wavelength due to waveguide dispersion

Step-Index Fiber	Core Diameter 2a(μm)	Relative Index Difference Δ	Material Composition	Material Dispersion λ_0 (μm)	Material Dispersion T [ps/(km nm²)]	Total Dispersion λ_0 (μm)	Total Dispersion T [ps/(km nm²)]	V	δλ (nm)
4	9.4	0.0019	quenched SiO_2	1.276	0.0124	1.31	0.0107	2.0	34
8	3.63	0.0215	quenched SiO_2	1.276	0.0124	1.55	0.0015	2.2	274

dimensioning the core to have a diameter 2a so that $dN/d\lambda=0$ in accordance with

$$\frac{dN}{d\lambda} = -\lambda\frac{d^2n_o}{d\lambda^2}\left[1+\Delta\frac{d(bV)}{dV}\right] - \pi a\left(\frac{N_o}{\lambda}\right)^2(2\Delta)^{1.5}\frac{d^2(bV)}{dV^2}$$

where: λ is wavelength; N is the group index of refraction including the sum of the material dispersion and the waveguide dispersion; n_o is the cladding phase index; b is the normalized propagation constant; N_o is the group index of refraction including material dispersion only; V is the normalized frequency $=\pi(2a/\lambda)N_o\sqrt{2\Delta}$.

4,300,931
METHOD AND APPARATUS FOR COLLECTING FIBROUS MATERIAL
John D. Phillips, Newark, Ohio, assignor to Owens-Corning Fiberglas Corporation, Toledo, Ohio
Filed Apr. 24, 1980, Ser. No. 143,224
Int. Cl.³ C03B *37/04*
U.S. Cl. 65—4.3 **10 Claims**

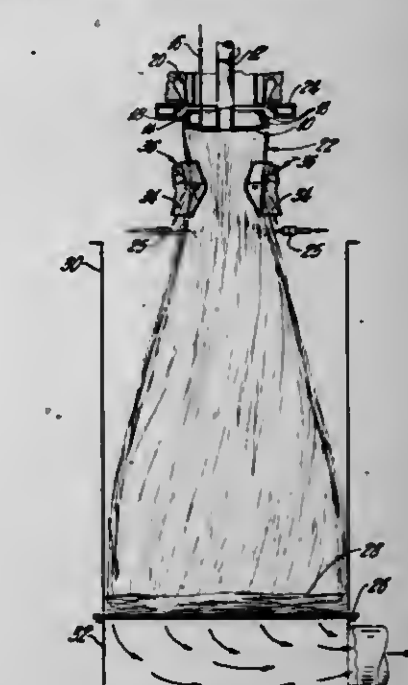

1. In a method for collecting fibrous mineral material of the type in which molten mineral material is supplied to a rotating spinner, the molten mineral material is discharged from the orificed peripheral wall of said spinner as mineral fibers, the mineral fibers are turned down into a downwardly moving veil, and the fibers are collected on a collection surface positioned beneath said spinner, the improvement comprising positioning a gas discharge nozzle beneath said spinner, said discharge nozzle comprising a downwardly converging inlet surface, a downwardly diverging outlet surface, and a gas discharge slot intermediate said inlet surface and said outlet surface, and discharging a flow of gases from said gas dis-

charge slot substantially parallel to said veil to expand said veil to the width of said collection surface.

4,300,932
APPARATUS FOR FORMING MINERAL FIBERS
John D. Phillips, Newark, Ohio, and William W. Schultz, Evanston, Ill., assignors to Owens-Corning Fiberglas Corporation, Toledo, Ohio
Filed Feb. 29, 1980, Ser. No. 126,086
Int. Cl.³ C03B *37/04, 37/07*
U.S. Cl. 65—14 **7 Claims**

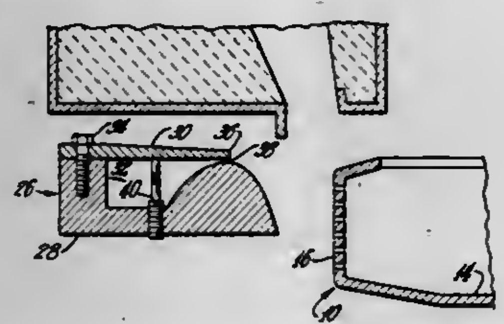

1. Apparatus for attenuating molten mineral material into mineral fibers comprising an orificed spinner for producing primary mineral fibers and a blower for further attenuating the primary mineral fibers into secondary mineral fibers, said blower comprising a body member and a lid member defining a gas supply manifold and a gas discharge slot, wherein the improvement comprises adjustment means adapted to raise and lower said lid member to control the size of said gas discharge slot.

4,300,933
METHOD OF MANUFACTURING AUTOMOTIVE WINDOWS BY COATING A SCORED SUBSTRATE
Donald D. Thomas, Crestline, Ohio, assignor to PPG Industries, Inc., Pittsburgh, Pa.
Filed May 27, 1980, Ser. No. 153,282
Int. Cl.³ C03B *27/00, 33/02;* C03C *17/22*
U.S. Cl. 65—60.1 **10 Claims**

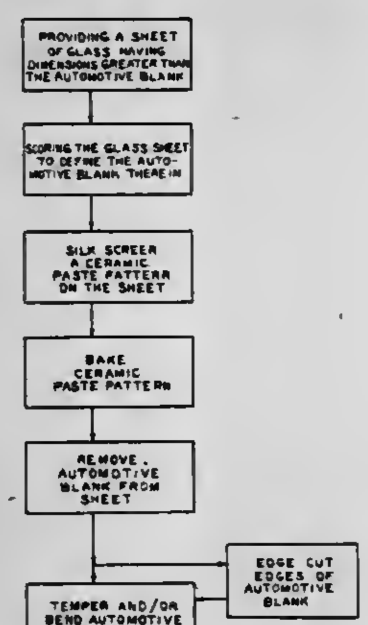

1. A method of making an automotive window for flush glazing, comprising the steps of:
scoring a sheet within its edges to define an automotive window blank having supporting sheet portions beyond the periphery of said window blank;
silk screening a pattern on the sheet;
supporting screen portions adjacent and beyond the pattern by the supporting sheet portions while practicing said silk screening step; and
removing the supporting sheet portions from the automotive window blank.

4,300,934
METHOD OF AND APPARATUS FOR SCORING A COATED SUBSTRATE
Robert P. DeTorre, Pittsburgh, Pa., assignor to PPG Industries, Inc., Pittsburgh, Pa.
Filed May 27, 1980, Ser. No. 153,387
Int. Cl.³ C03B *27/00, 33/02;* C03C *17/22*
U.S. Cl. 65—60.1 **22 Claims**

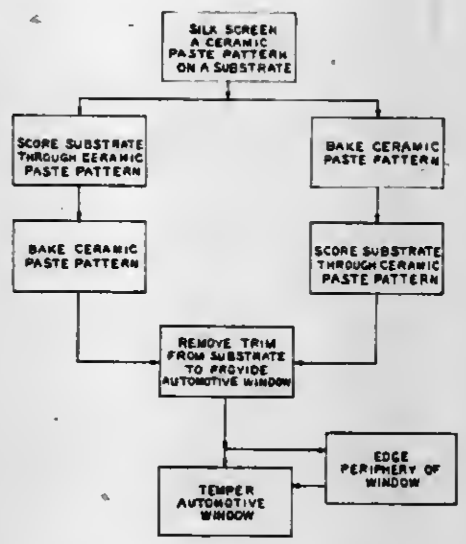

1. A method of manufacturing a sheet of refractory material having a predetermined configuration and having a pattern on a surface of the sheet with at least a portion of the pattern at the marginal edge of the sheet, comprising the steps of:
silk screening a ceramic paste pattern within edges of a piece of refractory material having peripheral dimensions greater than the peripheral dimensions of the sheet so as to support at least a screen portion which extends beyond the ceramic paste pattern by portions of the refractory piece that extend beyond the peripheral dimensions of the sheet;
scoring the refractory piece to define the sheet within the piece, said scoring step including scoring through the ceramic paste pattern to be at the marginal edges of the sheet; and
removing the sheet from the piece.

16. A method of tempering a glass sheet, comprising the steps of:
silk screening a heat absorbing ceramic paste pattern on a piece of glass to define a glass sheet to be tempered, said silk screening step being practiced while supporting screen portions extending beyond the screen pattern by trim which extends beyond the heat absorbing pattern on the glass piece;
removing the trim to provide the glass sheet to be tempered, the glass sheet having as removed peripheral and marginal edges and heat absorbing material on the marginal edge of at least one surface of the sheet; and
tempering the glass sheet having the as removed edges and heat absorbing material on the marginal edge of the sheet surface.

4,300,935
SHAPING GLASS SHEETS BY DROP FORMING WITH IMPROVED SAG CONTROL
Samuel L. Seymour, Oakmont, Pa., assignor to PPG Industries, Inc., Pittsburgh, Pa.
Continuation-in-part of Ser. No. 44,442, Jun. 1, 1979, Pat. No. 4,227,908, which is a continuation-in-part of Ser. No. 960,404, Nov. 13, 1978, abandoned. This application Mar. 7, 1980, Ser. No. 128,335
The portion of the term of this patent subsequent to Oct. 14, 1997, has been disclaimed.
Int. Cl.³ C03B *23/025*
U.S. Cl. 65—107 **7 Claims**

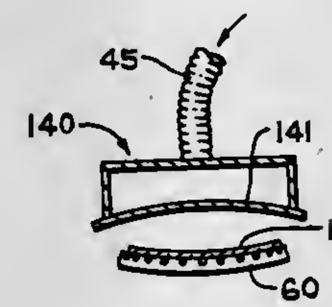

1. A method of shaping a glass sheet, comprising the steps of:
heating a glass sheet to approximately its softening point;
positioning a surface of the sheet and surface of a perforated plate into close proximity to each other, the surface of the plate having outer portions and inwardly, upwardly bowed inner portions;
drawing a vacuum through the perforated plate so as to bring outer marginal edge portions of the sheet against the outer portions of the plate and inner surface portions of the sheet against the inwardly, upwardly bowed inner portions of the plate to upwardly bow the inner surface portions of the sheet;
supporting the plate and the bowed sheet carried thereon in an essentially horizontal orientation with the bowed sheet under the plate;
vertically aligning the bowed sheet over a shaping mold, the shaping mold having a contour defining desired contour for the shaped glass sheet; and
releasing the bowed sheet from the plate so as to fall onto the shaping mold and conform to the contour defined by the shaping mold to shape the sheet.

5. An apparatus for shaping a glass sheet comprising:
furnace means for heating a glass sheet to a softened condition;
means for supporting a glass sheet adjacent to said furnace means;
means for transferring a glass sheet from said furnace means to said support means:
a platen having an enclosed interior space and a perforated sheet engaging surface having outer portions and inwardly, upwardly bowed inner portions;
means for transferring said platen into and out of close proximity to said support means so as to lift by way of vacuum, a glass sheet from said support means;
a shaping mold having upwardly facing shaping surface defining a desired curvature corresponding to the shape of a shaped glass sheet; and
shuttle means for alternatively bringing said platen and said shaping mold into and out of superimposed vertically spaced relationship to each other, wherein said shaping mold in the superimposed position is supported at an elevation below said perforated sheet engaging surface so as to receive and shape a glass sheet dropped from said platen.

4,300,936
PROCESS OF COOLING GLASS IN A FLUIDIZED BED
Jean C. Quillevere, Sainte Genevieve des Bois, and Jean Segall, Paris, both of France, assignors to BFG Glassgroup, Paris, France
Filed Jun. 27, 1979, Ser. No. 52,393
Claims priority, application Luxembourg, Jul. 21, 1978, 80019
Int. Cl.³ C03B *27/00*
U.S. Cl. 65—114 **21 Claims**

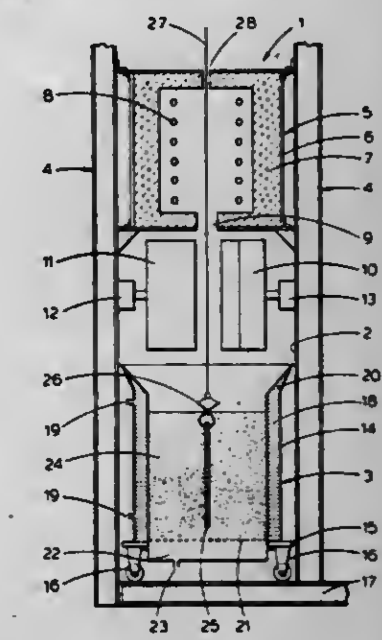

1. A process for cooling glass comprising: introducing the glass into a fluidised bed of particles under thermal conditions such that heat is transferred from the glass to the fluidised material, wherein said fluidised material comprises solid particles which can be caused to undergo endothermic change by heating said particles to a temperature lower than the temperature of the glass as it enters the fluidised bed, and wherein at least some of said solid particles are particles of trihydrated alumina, activated alumina containing adsorbed or absorbed water in an amount of 20 to 30% by weight, α-$Fe_2O_3.H_2O$, or γ-$Fe_2O_3.H_2O$.

4,300,937
QUENCH DEVICES, GLASS TEMPERING FURNACES, AND METHODS OF UTILIZING SAME
Donald E. Rhonehouse, Cecil, Ohio, assignor to TGS Systems, Inc., Antwerp, Ohio
Continuation-in-part of Ser. No. 43,357, May 29, 1979. This application Jan. 21, 1980, Ser. No. 113,828
Int. Cl.³ C03B *27/00*
U.S. Cl. 65—114 **39 Claims**

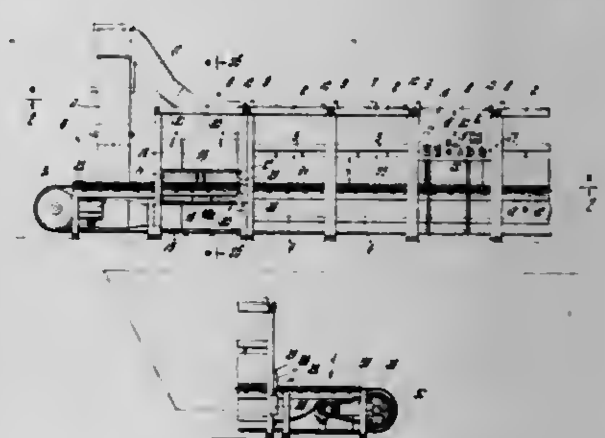

1. A glass tempering system comprising:
a furnace including an upper furnace section and a lower furnace section defining a horizontally elongated heating chamber;
a plurality of heating means disposed within said upper furnace section;
first frame means for supporting said upper furnace section;

second frame means for supporting said lower furnace section;

a plurality of adjustable first roller support means disposed upon an upper surface of said second frame means;

an endless flexible belt supported at least in part by said first roller support means;

a plurality of first elongated ceramic rollers spaced along the length of said elongated heating chamber;

said first elongated rollers being supported by said endless flexible belt, and extending into and through said heating chamber;

said first elongated rollers being provided with non-metallic cylindrical pins frictionally retained in apertures provided in either end of said elongated rollers coaxial with the axis of said rollers;

adjustable guide members provided with at least one elongated aperture therethrough for receiving one said cylindrical pin retained in one said first elongated roller;

a load section including third frame means connected to said second frame means;

a plurality of said first adjustable roller support means disposed on an upper surface of said third frame means;

said endless belt being supported upon said first adjustable roller support means;

second elongated rollers driven by said endless belt;

said second elongated rollers being provided with ends having a pin adapted to be rotatably received through an aperture of said adjustable guide member;

primary and secondary quench sections including a plurality of said adjustable roller support means for supporting a portion of said endless belt; and

said primary quench section including high flow, low suction air cooling devices;

said secondary quench section including air cooling devices;

drive means for said endless belt, including control means for causing said belt to alternately rotate said first and second elongated rollers in a first direction and then in an opposite direction for an electronically adjustable extent of rotation and for an adjustable speed of rotation, and to cause an extended unidirectional rotation of said first and second support rollers at an adjustable speed after a predetermined number of said alternate rotations, so that a sheet of glass placed upon said second elongated rollers in said load section will be conveyed into said heating chamber, adjustably oscillated at a plurality of predetermined locations within said furnace, conveyed to and oscillated within said quench sections, and conveyed to said unload section.

26. A method of heating and quenching a workpiece, comprising the steps of:

placing a workpiece upon a load conveyor;

moving said workpiece into a heating section for a predetermined period of time;

moving said workpiece from the heating section into a primary quench section;

cooling the heated workpiece in the primary quench section by subjecting the heated workpiece to the air flow produced by one or more high flow, low suction air cooling devices;

moving said workpiece into a secondary quench section for further cooling said workpiece;

moving said workpiece into an unload section;

unloading the finished workpiece; and

wherein said workpiece is reciprocated within said heating and said primary quench and said secondary quench sections for predetermined periods over distances substantially less than the length of the workpiece being treated.

4,300,938

GLASS RIBBON ATTENUATING APPARATUS

Earl L. May, Irwin, Pa., assignor to PPG Industries, Inc., Pittsburgh, Pa.

Filed Jun. 2, 1980, Ser. No. 155,872

Int. Cl.³ C03B *18/06*

U.S. Cl. 65—182.4 **29 Claims**

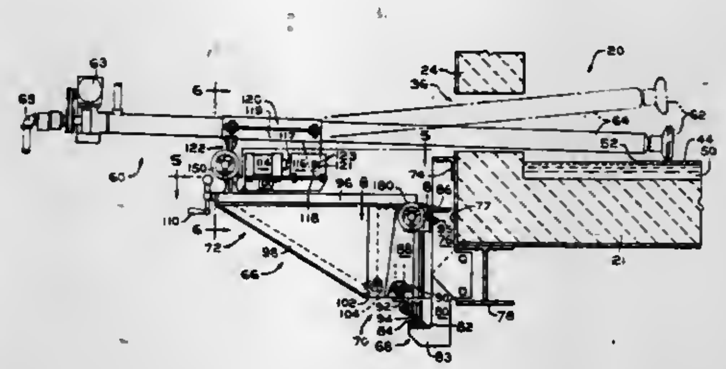

1. An apparatus for attenuating a ribbon of glass which is supported upon a pool of molten metal contained in a chamber, said chamber including refractory sidewalls and a refractory bottom encased within a casing member and supported by structural support members extending below said casing member, at least one of said sidewalls having at least one opening therein above the level of said pool of molten metal to provide access into said chamber for engagement of a marginal edge portion of said ribbon of glass, comprising:

support means structurally mounted to and supported by said casing member and at least one of said structural support members below the elevation of said at least one opening in such a manner that said support means is isolated from floor vibrations;

platform means;

means for pivotally mounting said platform means to said support means to provide substantially horizontal arcuate motion of said platform means;

an elongated member;

means mounted to said elongated member for engaging marginal edge portions of said glass ribbon; and

means for mounting said elongated member on said platform means.

15. In an apparatus for attenuating a ribbon of glass which is supported upon a pool of molten metal contained within a chamber having sidewalls with at least one opening therein, the opening providing access for engagement of a marginal edge portion of said ribbon of glass to establish and maintain a desired ribbon width and thickness, comprising support means, means for applying force to said glass ribbon, and an elongated member interconnecting said support means and said force means, said elongated member having an inner tubular member rotatably driven within an outer tubular member, the improvement comprising:

bushing means between said tubular members for supporting said inner tubular member within said outer tubular member near said force means; and

bearing means secured between said tubular members near said support means for supporting said inner tubular member in coaxial alignment with said bushing means.

4,300,939

METHOD OF PROCESSING WASTE SLUDGE FROM WET PHOSPHORIC ACID PURIFICATION ACID PURIFICATION FACILITIES

Martin Hater; Fritz Meininghaus, both of Dortmund, and Rudiger Scheel, Schwerte, all of Fed. Rep. of Germany, assignors to Uhde GmbH, Fed. Rep. of Germany

Filed Jun. 30, 1980, Ser. No. 164,698

Claims priority, application Fed. Rep. of Germany, Jun. 30, 1979, 2854433

Int. Cl.³ C05B *21/00*

U.S. Cl. 71—25 **10 Claims**

1. A method of converting waste sludge of substantially no utility from wet phosphoric acid purification, having a relatively high, water-soluble phosphatic content to a useful fertilizer, said method comprising grinding steelworks slag having a relatively low phosphatic content, contacting said sludge with said ground slag, forming a fertilizer admixture from said sludge and slag having an averaged phosphatic content depending on the relative proportions or sludge and slag used.

4,300,940

METHOD AND COMPOSITION FOR TREATING SOIL TO SUPPRESS THE NITRIFICATION OF AMMONIUM NITROGEN THEREIN

Jeffrey D. Griffith, Lafayette, Calif., assignor to The Dow Chemical Company, Midland, Mich.

Filed Jul. 19, 1979, Ser. No. 59,085

Int. Cl.³ C05G *3/08*

U.S. Cl. 71—27 **5 Claims**

1. A method for suppressing the nitrification of ammonium nitrogen in growth media which comprises treating said growth media with a compound having the formula

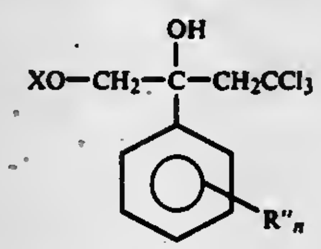

wherein X is hydrogen, or R'CO—; wherein R' is alkyl of 1 to 4 carbon atoms or phenyl and R'' is 3, 4 or 5 ring substituted chloro or alkyl of 1 to 4 carbon atoms and n is 0, 1 or 2.

4,300,941

AGENT AND METHOD FOR ACCELERATING THE MATURATION OF FIELD AND GARDEN CROPS

Kazumitsu Nakama, Yaizu, Japan, assignor to Showa Denko Kabushiki Kaisha, Tokyo, Japan

Filed Apr. 7, 1980, Ser. No. 138,189

Claims priority, application Japan, Apr. 19, 1979, 54-47376; Dec. 4, 1979, 54-157074

Int. Cl.³ A01N *59/02*

U.S. Cl. 71—65 **2 Claims**

1. A method for accelerating the maturation of field and garden crops from which fruits, seeds, roots or subterranean stems are harvested, said method comprising applying an aqueous solution, having a concentration of from 0.01 to 0.3% by weight, of at least one thiosulfate selected from the group consisting of potassium thiosulfate, soduium thiosulfate, magnesium thiosulfate and ammonium thiosulfate to the crops immediately before the change of stage in plant physiology between the nutritive growth stage and the maturation stage.

4,300,942

N-(SUBSTITUTED CARBONYL) DERIVATIVES OF N-PHOS-PHINYLMETHYLGLYCINATES AND THE HERBICIDAL USE THEREOF

Robert J. Kaufman, University City, Mo., assignor to Monsanto Company, St. Louis, Mo.

Division of Ser. No. 947,134, Sep. 29, 1978, Pat. No. 4,251,258. This application Jun. 25, 1980, Ser. No. 162,706

Int. Cl.³ A01N *57/12*; C07F *9/40*

U.S. Cl. 71—87 **12 Claims**

5. A herbicidal composition comprising an inert adjuvant and a herbicidally effective amount of a compound of the formula

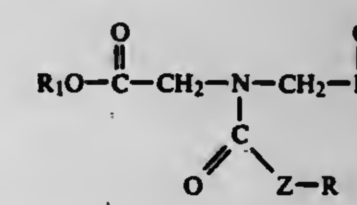

wherein R is selected from the group consisting of lower alkyl, lower alkenyl, lower alkynyl or benzyl; R_1 is selected from the group consisting of lower alkyl or lower alkoxyalkyl; Z is sulfinyl, and X is phenoxy or phenoxy substituted with up to three groups individually selected from the class consisting of lower alkyl, lower alkoxy, halogen and nitro.

4,300,943

ESTER DERIVATIVES OF N-ARYLTHIO-N-PHOSPHONOMETHYLGLYCINONITRILE

Gerard A. Dutra, Ladue, Mo., and James A. Sikorski, West Lafayette, Ind., assignors to Monsanto Company, St. Louis, Mo.

Continuation-in-part of Ser. No. 64,676, Aug. 8, 1979, Pat. No. 4,252,554. This application Jan. 2, 1981, Ser. No. 222,219

Int. Cl.³ A01N *57/14*; C07F *9/40*

U.S. Cl. 71—87 **6 Claims**

3. A herbicidal composition comprising an inert adjuvant and a herbicidally effective amount of a compound of the formula

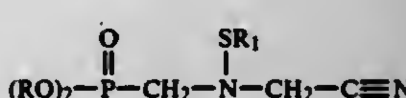

wherein R is phenyl, naphthyl or biphenylyl or phenyl, naphthyl or biphenylyl substituted with from one to three substituents independently selected from the class consisting of lower alkyl, lower alkoxy, lower alkylthio, alkoxycarbonyl, methylenedioxy, trifluoromethyl, cyano, nitro and halogen; and R_1 is naphthyl.

4,300,944

HERBICIDALLY ACTIVE UNSATURATED ESTERS OF HALOGENATED α-[4-(PYRIDYL-2'-OXY)-PHENOXY]-PROPIONIC ACIDS

Beat Böhner; Hermann Rempfler, and Rolf Schurter, all of Binningen, Switzerland, assignors to Ciba-Geigy Corporation, Ardsley, N.Y.

Filed Jan. 12, 1979, Ser. No. 2,923

Claims priority, application Switzerland, Jan. 18, 1978, 513/78

Int. Cl.³ C07D *213/02*

U.S. Cl. 71—94 **10 Claims**

1. The compound of the formula

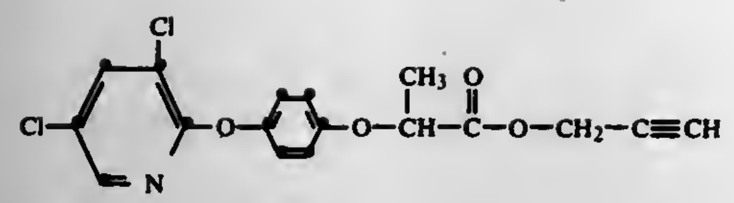

4,300,945

SYNERGISTIC HERBICIDAL COMPOSITIONS

Gerald H. Thiele, Sunnyvale; Ashley H. Freiberg, Santa Clara; Robert L. Skiles, and David L. King, both of Los Gatos, all of Calif., assignors to Stauffer Chemical Company, Westport, Conn.

Continuation-in-part of Ser. No. 27,224, Apr. 5, 1979, abandoned. This application Feb. 6, 1980, Ser. No. 118,933

Int. Cl.[3] A01N *43/36, 41/00*

U.S. Cl. 71—95 2 Claims

1. A synergistic herbicidal composition consisting essentially of an effective amount of a mixture of

(a) a pyrrolidone of the formula

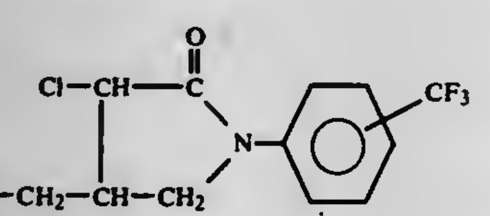

and

(b) an acetanilide of the formula

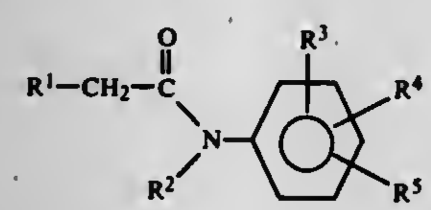

in which

R^1 is hydrogen;

R^2 is hydrogen;

R^3 is 2-methyl;

R^4 is 4-methyl; and

R^5 is 5—$NHSO_2CF_3$,

at a weight ratio of (a) to (b) of from about 0.125:1 to about 8:1.

4,300,946

GRANULATING AND ACTIVATING METAL TO FORM METAL HYDRIDE

Harold M. Simons, Orem, Utah, assignor to Billings Energy Corporation, Independence, Mo.

Continuation of Ser. No. 40,053, May 17, 1979, abandoned. This application Jul. 30, 1980, Ser. No. 173,833

Int. Cl.[3] B22F *9/00;* C01B *3/00, 6/00, 6/02*

U.S. Cl. 75—0.5 B 3 Claims

1. A method for simultaneously granulating a metal material selected from the group consisting of iron, titanium, nickel, rare earth metals, calcium, magnesium, manganese, and mixtures or alloys thereof, and conditioning or activating the metal material in a single activation step, said method comprising:

subjecting the metal material to a vacuum to outgas the surface of the material of any impurity gases;

heating the metal material to a temperature of at least about 200° F., said metal material having a particle size greater than about 1 centimeter;

treating the metal material with hydrogen to activate the metal material to a state in which it is capable of readily reacting with and absorbing hydrogen when contacted with hydrogen at a given temperature and pressure and of releasing hydrogen when either the temperature is increased above the given temperature, the pressure is reduced below the given pressure or the temperature is increased above the given temperature and the pressure is concurrently reduced below the given pressure, and

concurrently subjecting the metal material to a mechanical impact to break up the material.

4,300,947

MECHANICALLY ALLOYED POWDER PROCESS

Emil M. Habesch, Jr., Ballston Lake, and John R. Rairden, Schenectady, both of N.Y., assignors to General Electric Company, Schenectady, N.Y.

Continuation-in-part of Ser. No. 91,112, Nov. 5, 1979, abandoned. This application Sep. 26, 1980, Ser. No. 191,268

Int. Cl.[3] B22F *9/02*

U.S. Cl. 75—0.5 R 7 Claims

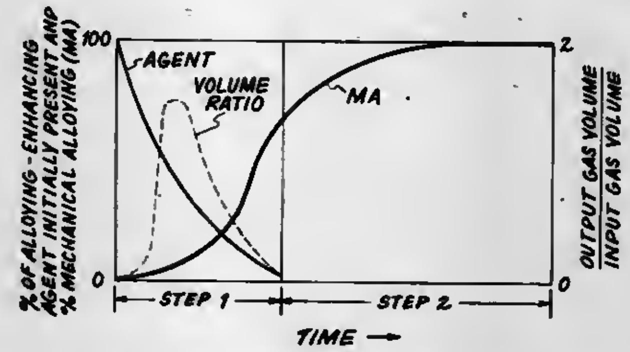

1. In the process for preparing alloy and superalloy powders from a plurality of constituents in powdered form, at least one of which is an atmospherically active element, present as a substantial proportion of the total of said constituents and in elemental form, by mechanical alloying in an attritor-type mill the improvement which comprises:

(a) mechanically alloying said constituents in a controlled continuously decreasing presence of an alloying-enhancing agent followed sequentially and without interruption of the process at the point of substantial absence of said agent by;

(b) dry mechanically alloying said constituents forming thereby an alloy in powdered form;

(c) wet mixing and stripping said alloy powder in the presence of an alloying-enhancing agent, said agent being substantially present during said mixing and stripping in a quantity sufficient to completely engulf said alloy powder; and

(d) recovering said alloy powder.

4,300,948

METHOD OF CONTINUOUS REDUCTION OF IRON OXIDES

Paul Metz, Luxembourg, Luxembourg, assignor to Arbed S.A., Luxembourg, Luxembourg

Filed Apr. 8, 1980, Ser. No. 138,422

Claims priority, application Luxembourg, Jun. 26, 1979, 81427

Int. Cl.[3] C21B *13/00*

U.S. Cl. 75—34 8 Claims

1. A method of reducing iron oxide material which comprises the steps of:

(a) coking coal in a coke oven for a predetermined length of time in a cokefication process and producing coke-oven gas during this length of time in said coke oven;

(b) continuously drawing hot coke-oven gas consisting predominantly of hydrogen and carbon monoxide from said coke oven during the second half of a time of said cokefication process;

(c) feeding iron oxide material to a reducing chamber separated from said coke oven;

(d) continuously contacting said iron oxide material in said chamber with said coke-oven gas drawn from said coke oven to reduce said material directly at substantially the

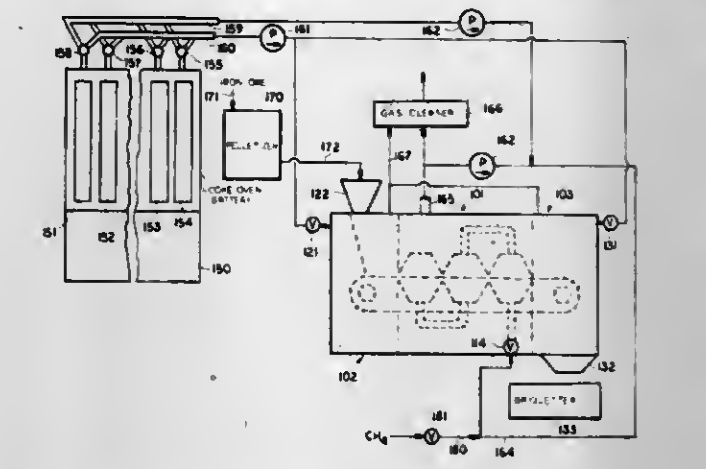

temperature at which said coke-oven gas was drawn in step (b); and

(e) discharging the reduced material.

4,300,949

METHOD FOR TREATING SULFIDE RAW MATERIALS

Konstantin I. Ushakov, Maly Demidovsky pereulok, 3, kv. 95, Moscow; Mikhail E. Khilko, ulitsa Sovetskaya, 26, kv. 4, Mednogorsk Orenburgskoi oblasti; Rina I. Felman, Yaroslavskaya ulitsa, 1/9, kv. 48, Moscow; Vasily I. Sadykov, ulitsa Tikhomirova, 7/3, kv. 143, Moscow; Evgeny I. Kalnin, ulitsa Chertanovskaya, 13, kv. 46, Moscow, and Pavel A. Kovgan, Izmailovsky bulvar, 40/14, kv. 27, Moscow, all of U.S.S.R.

Filed Mar. 7, 1980, Ser. No. 129,013

Int. Cl.[3] C22B *15/00*

U.S. Cl. 75—73 5 Claims

1. Method of treating non-ferrous sulfide raw materials in a blast furnace, which comprises autogenously smelting in a blast furnace provided with tuyeres a charge consisting of non-ferrous sulfide raw material and fluxes by blowing therein oxygen-containing gas, providing a quartz layer 0.3 to 1.5 m high immediately above the tuyeres so as to provide a sufficiently complete oxidation of iron sulfide by the oxygen contained in the oxygen-enriched blow with an oxygen consumption of 300 to 400 m^3/tonne of sulfide material, thereby producing matte, slag, elemental sulfur and sulfur-containing gases.

4,300,950

AMORPHOUS METAL ALLOYS AND RIBBONS THEREOF

Fred E. Luborsky, Schenectady, and John L. Walter, Scotia, both of N.Y., assignors to General Electric Company, Schenectady, N.Y.

Continuation of Ser. No. 898,482, Apr. 20, 1978, abandoned. This application May 4, 1979, Ser. No. 36,197

The portion of the term of this patent subsequent to Aug. 12, 1997, has been disclaimed.

Int. Cl.[3] C22C *38/02*

U.S. Cl. 75—123 B 5 Claims

1. An iron-boron-silicon amorphous metal alloy having an unique combination of physical and magnetic properties including ductility, elevated temperature stability and saturation flux density, said alloy consisting essentially of from 80 to 84 atom percent iron, from 12 to 15 atom percent boron and from one to eight atom percent silicon.

4,300,951

LIQUID PHASE SINTERED DENSE COMPOSITE BODIES AND METHOD FOR PRODUCING THE SAME

Takeji Hachisuka, Toyama, Japan, assignor to Kabushiki Kaisha Fujikoshi, Toyama, Japan

Filed Feb. 12, 1979, Ser. No. 11,669

Claims priority, application Japan, Feb. 24, 1978, 53/19610

Int. Cl.[3] C22C *29/00;* B22F *7/00*

U.S. Cl. 75—236 17 Claims

1. A liquid phase sintered dense composite body, comprising:

a first multiplicity of particles including at least one hard refractory metal carbide selected from the group consisting of TiC and WC;

a second multiplicity of particles including at least one cementing metal having a relatively fine grain size, said cementing metal cementing together said particles of hard refractory metal carbide after having been melted by liquid phase sintering and then solidified; and

a multiplicity of metallic elements having the same composition as said cementing metal integrally incorporated with said composite body, said metallic elements having a melting point which is at least 120° C. higher than the eutectic temperature of said refractory and cementing metals, said metallic elements further having a thickness which is at least twenty times the grain size of said cementing metal component.

10. A method of making a liquid phase sintered dense composite body comprising a first multiplicity of particles including at least one base refractory metal carbide selected from the group consisting of TiC and WC, a second multiplicity of particles including at least one cementing metal component which cements together said first multiplicity of particles after having been melted by liquid phase sintering and then solidified, and a multiplicity of metallic elements having the same composition as said cementing metal component integrally incorporated with said composite body, said method comprising the steps of:

preparing a powder of said hard refractory metal carbide;

preparing a powder of said at least one cementing metal component;

preparing said multiplicity of metallic elements in the form of at least one of coarse grains, strands and plates, said metallic elements having a melting point which is at least 120° C. higher than the eutectic temperature of said refractory and cementing metals and a thickness which is at least twenty times the grain size of said cementing metal component;

mixing said powders of hard refractory metal carbide and cementing metal component to form a powder mixture;

incorporating said multiplicity of metallic elements with said powder mixture at a predetermined position;

compacting said powder mixture and incorporated multiplicity of metallic elements; and

heating the thus prepared compacted powder mixture and metallic elements to a temperature in the range 1280° C.–1350° C. to form a eutectic liquid phase at which sintering takes place, said heating being carried out for a sufficient time to cement said hard refractory metal carbide with said eutectic, said incorporated multiplicity of metallic elements being maintained at said predetermined position without being destroyed.

4,300,952

CEMENTED HARD METAL

Nils A. Ingelström, Bromma, and Leif A. E. Akesson, Stockholm, both of Sweden, assignors to Sandvik Aktiebolag, Sandviken, Sweden

Filed Feb. 28, 1979, Ser. No. 15,889

Claims priority, application Sweden, Feb. 28, 1978, 7802236

Int. Cl.[3] C22C *29/00, 1/05*

U.S. Cl. 75—238 10 Claims

1. A cemented hard metal comprising one or more hard

materials in an amount of 70 to 97 percent by weight and a binder alloy of iron group metals in amounts of 3 to 30 percent by weight, the hard materials consisting of at least 20 percent by weight of a molybdenum-tungsten-carbonitride having the structure of tungsten carbide WC with the molybdenum and/or tungsten being at least partly substituted for by a metal selected from the group consisting of Cr, Nb, Ta, V, Re and mixtures thereof.

8. In a method of making a molybdenum-tungsten-carbonitride having the structure of tungsten carbide WC wherein molybdenum, tungsten, and carbon in proportions sufficient for formation of the monocarbide, are heated in a nitrogen-containing atmosphere at a temperature sufficient to form the said molybdenum-tungsten carbonitride, the improvement comprising: substituting at least one metal M selected from the group consisting of Cr, Nb, Ta, Va, Re and mixtures thereof at least partly for the molybdenum and/or tungsten so as to form a carbonitride having the composition $(M_xMo_yW_z)$ (C,N) in which

$x=>0$ and up to 0.3
$y=0.0$–0.95
$z=0.05$–0.95
and $x+y+z=1$.

4,300,953

DENSE CORDIERITE CONTAINING MANGANESE

Irwin M. Lachman, Corning, N.Y., assignor to Corning Glass Works, Corning, N.Y.

Filed Jul. 3, 1980, Ser. No. 165,611

Int. Cl.³ C04B *35/04, 35/10*

U.S. Cl. 501—112 8 Claims

1. An impervious, unglazed, sintered manganese-containing ceramic product having its major and primary crystal phase being cordierite crystal structure, having an analytical molar composition of about 1.7–2.4RO.1.9–2.4Al_2O_3.4.5–5.2 SiO_2 and made of mineral batch composition selected from:

(a) wholly raw ceramic material wherein RO comprises, as mole % of RO, about 55–95% MnO and 5–45% MgO, and
(b) at least about 50 wt. % prereacted cordierite material and the balance thereof being raw ceramic material, and wherein RO comprises, as mole % of RO, about 5–40% MnO and 60–95% MgO.

4,300,954

FLUSHING PROCESS FOR PIGMENTS

Francis de Monterey, Hopkins; Bharat J. Adhia, and David M. Johnson, both of Holland, all of Mich., assignors to BASF Wyandotte Corporation, Wyandotte, Mich.

Filed Jan. 3, 1980, Ser. No. 109,334

Int. Cl.³ C08J *3/20;* C09D *17/00*

U.S. Cl. 106—309 12 Claims

1. A method of producing a pigment-hydrophobic organic vehicle product which comprises forcing a pigment-containing aqueous pulp-hydrophobic organic vehicle mixture having proportions of pigment to vehicle up to about 3:1 through a chamber comprising a set of at least two adjoining partial cylindrical surfaces, said chamber having defined at one end thereof at least one axial opening and having at least one second opening spaced from said axial opening, said mixture being forced through said chamber and said axial opening by a set of at least two rotating helical surfaces whereby water is squeezed from said mixture and exits through said second opening and said product is forced through said axial opening.

4,300,955

PROCESS FOR REMOVING A RESINOUS COATING FROM FIBERGLASS PRODUCTS

John W. Yount, P.O. Box 7, Bullock, N.C. 27507

Filed May 9, 1980, Ser. No. 148,147

Int. Cl.³ B08B *3/08*

U.S. Cl. 134—3 6 Claims

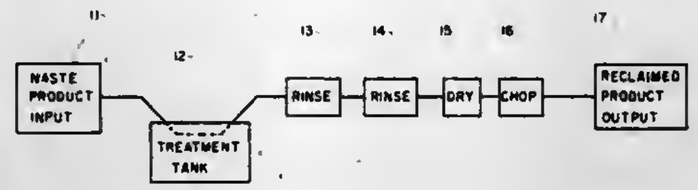

1. A reclaiming process for removing a ureaformaldehyde type resin coating from spun fiberglass products comprising: dipping said coated products into a solution of water and phosphoric acid; removing said product from said solution; rinsing said product to remove any solution and resin residues; and drying said product whereby waste resin treated fiberglass can be reclaimed and reused as a virgin fiberglass product.

4,300,956

METHOD OF PREPARING A METAL SUBSTRATE FOR USE IN A CATALYTIC CONVERTER

Gregory J. Rosenberger, Malvern, and Louis Peters, Philadelphia, both of Pa., assignors to Matthey Bishop, Inc., Malvern, Pa.

Filed Apr. 14, 1980, Ser. No. 139,667

Int. Cl.³ C23C *11/00;* B23K *20/00*

U.S. Cl. 148—6.3 7 Claims

1. A method of preparing a metal substrate for use in a catalytic converter which comprises assembling together alternating layers of corrugated and non-corrugated sheets of metal alloy including aluminum as an alloy component so as to form an assembly wherein the layers have alternating areas of contact and non-contact; and heating the assembly in an oven under a hydrogen atmosphere at a pressure of from about 0.5 to 5 micro-atmospheres and a temperature in the range of about 1000° C. to about 1200° C. until the layers are bonded together by metal-to-metal diffusion bonding at the points where the flat and corrugated sheets are in contact.

4,300,957

VAPOR TREATMENT OF METAL TIRE CORD

Karol Marencak, Bissen, Luxembourg, and Grover W. Rye, Cuyahoga Falls, Ohio, assignors to The Goodyear Tire & Rubber Company, Akron, Ohio

Division of Ser. No. 950,333, Oct. 10, 1978, Pat. No. 4,189,332, which is a continuation of Ser. No. 644,673, Dec. 29, 1975, abandoned. This application Dec. 13, 1979, Ser. No. 103,242

The portion of the term of this patent subsequent to Feb. 19, 1997, has been disclaimed.

Int. Cl.³ C23F *7/00*

U.S. Cl. 148—6.31 2 Claims

1. A process of treating a filament of steel which comprises continually passing a steel filament having a microscopically porous brass coating thereon through the vapor of benzotriazole to form primarily a monomolecular coating thereof on said filament where said filament is at a temperature lower than the temperature of said vapor so that the vapor is condensed on the surface of the wire while interacting therewith.

4,300,958

SEMI-HARD MAGNETIC MATERIAL FOR A REED SWITCH AND PROCESS FOR PRODUCING THE SAME

Yuichi Suzuki, Zushi; Masanori Okada, Yokohama, and Zenzo Henmi, Kawasaki, all of Japan, assignors to Fujitsu Limited, Kawasaki, Japan

Continuation of Ser. No. 964,515, Nov. 29, 1978, abandoned. This application Jul. 7, 1980, Ser. No. 165,990

Claims priority, application Japan, Nov. 29, 1977, 52-142147

Int. Cl.³ H01F *1/00*

U.S. Cl. 148—120 31 Claims

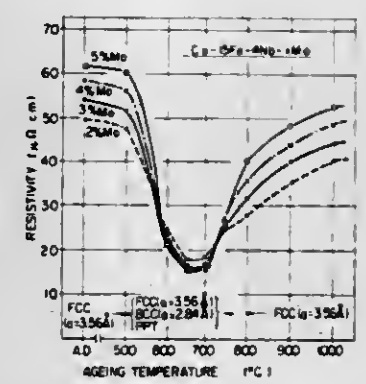

1. A semi-hard magnetic material comprising a composition in the following ranges

iron from 12 to 18% by weight,
niobium from 2 to 4%,
molybdenum from 2 to 5%,
cobalt for essentially the balance, and
said material comprising a coercive force above 35 oersteds.

4,300,959

IMPERMEABLE ELECTROFORM FOR HOT ISOSTATIC PRESSING

Peter A. Hurwitz, East Hartford, and Joseph F. Loersch, Bolton, both of Conn., assignors to United Technologies Corporation, Hartford, Conn.

Filed Aug. 22, 1979, Ser. No. 68,846

Int. Cl.³ C22D *1/08, 1/10*

U.S. Cl. 148—127 3 Claims

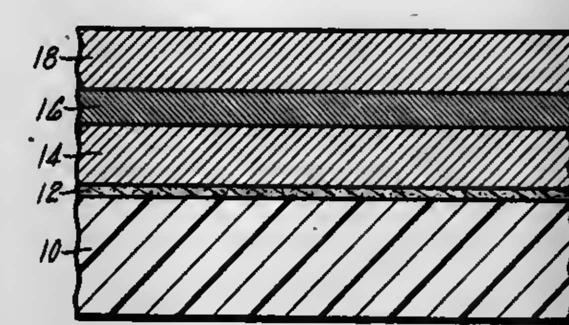

1. The method of forming an impermeable free-standing metal structure from deposited metals which comprises:

providing a pattern with a conductive surface;
depositing a first metal layer with a first melting point on the pattern surface;
depositing a second metal layer having a second melting point upon the first layer to create a two-layer metal structure, the layers having the capability of alloying;
removing the pattern from the metal structure;
heating the metal structure to a temperature of at least 1100° C. to melt at least a portion of one of the layers, the other layer remaining substantially unmelted to provide structural support for the metal structure, to maintain its shape during heating; and
cooling the structure to solidify the melted layer and thereby make the structure impermeable to gases at pressure of the order of 100 MPa.

2. The method of forming an impermeable free-standing metal structure from deposited layers which comprises

providing a pattern with a conductive surface;
depositing a first metal layer with a first melting point on the pattern surface;
depositing a second metal layer, having a second melting point upon the first layer;
depositing a third metal layer having a third melting point upon the second layer, wherein the first and third melting points are higher than the second melting point, thereby forming a three-layer metal part which is permeable to gases at pressure of the order of 100 MPa;
removing the pattern to produce a free-standing metal part consisting only of deposited layers;
heating the metal part comprised of the three layers to a temperature of at least 1100° C., sufficient to melt at least a portion of the second layer but insufficient to cause melting of at least a portion of one of the first or third layers, the melting in the second layer occurring at a temperature greater than 1100° C. and causing a degree of alloying between at least two of the adjacent layers, and the unmelted portions thereby maintaining the shape of the part; and
then cooling the part to solidify the melted portions, to make it impermeable to gases at pressures of the order of 100 MPa.

4,300,960

METHOD OF MAKING A LIGHT EMITTING DIODE

Susumu Koike, Kawachinagano, and Hitoo Iwasa, Ibaraki, both of Japan, assignors to Matsushita Electric Industrial Co., Ltd., Kadoma, Japan

Filed Mar. 18, 1980, Ser. No. 131,413

Claims priority, application Japan, Mar. 19, 1979, 54-32792

Int. Cl.³ H01L *21/208*

U.S. Cl. 148—171 8 Claims

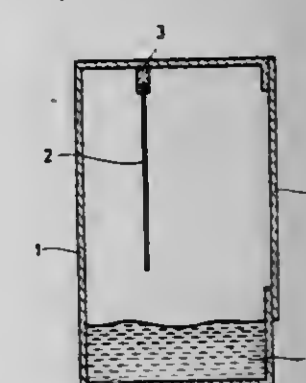

1. A method of making a light emitting diode using a liquid phase epitaxial method comprising the steps of,

(a) growing a first p-type epitaxial layer from a gallium melt containing Zn, Ga_2O_3 and GaP on an n-type GaP substrate at a cooling rate greater than 3° C. per minute, and
(b) growing a second p-type epitaxial layer from said gallium melt on said first p-type epitaxial layer at a cooling rate less than 1.5° C. per minute.

4,300,961

PROCESS FOR DETERRENT COATING OF TRIPLE BASE PROPELLANT COMPOSITIONS

Rafelix A. Williams, Radford, Va., assignor to Hercules Incorporated, Wilmington, Del.

Filed Apr. 28, 1980, Ser. No. 144,142

Int. Cl.³ G06B *45/28*

U.S. Cl. 149—10 4 Claims

1. A process for preparation of progressive burning propellant granules from strands of propellant prior to drying of said strands to remove processing solvents, the propellant composition of said strands comprising nitrocellulose, energetic nitrate ester plasticizer and nitroguanidine, said process comprising:

(a) contacting the exterior surface of the solvent-wet propellant strand with a nonaqueous mixture comprising a burn-

ing rate deterrent and a solvent, said burning rate deterrent being selected from dimethyl diphenyl urea, diethyl diphenyl urea, ethylene dimethacrylate, lead-2-ethyl hexoate and linear polyesters capable of diffusing into said propellant strand, said polyesters having a weight average molecular weight of from about 1,500 to about 30,000, a melting point not exceeding 190° F. and being substantially nonmigrating within said propellant strand at temperatures below 150° F., and continuing contact for a time

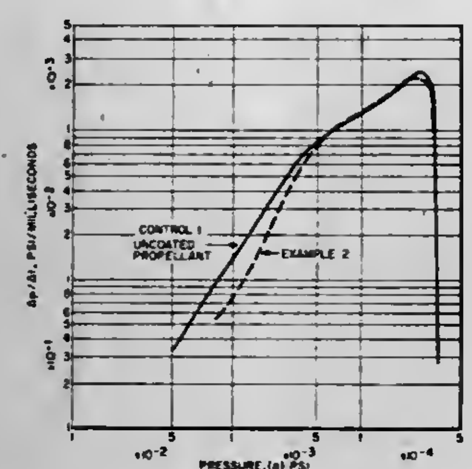

sufficient to permit the burning rate deterrent to penetrate the surface of said strand,

(b) promptly washing excess mixture of burning rate deterrent and solvent from the surface of said strand with water and cutting said strand of deterrent coated propellant into granules, the order of the steps of washing and cutting being interchangeable provided washing is conducted promptly, and

(c) drying the resulting deterrent coated granules.

4,300,962

AMMONIUM NITRATE EXPLOSIVE SYSTEMS

Mary M. Stinecipher, and Michael D. Coburn, both of Los Alamos, N. Mex., assignors to The United States of America as represented by the United States Department of Energy, Washington, D.C.

Filed Oct. 18, 1979, Ser. No. 84,026

Int. Cl.³ C06B *31/32*

U.S. Cl. 149—47 **9 Claims**

1. An explosive composition which comprises a mixture in a desired ratio of ammonium nitrate and an ammonium salt of 2-nitropyrrole, 3-nitropyrrole, 3,4-dinitropyrrole, 2,4-dinitropyrrole, 2,5-dinitropyrrole, 2-nitroimidazole, 4-nitroimidazole, 2,4-dinitroimidazole, 4,5-dinitroimidazole, 2,4,5-trinitroimidazole, 3-nitropyrazole, 4-nitropyrazole, 3,5-dinitropyrazole, 4-nitro-1,2,3-triazole, 3-nitro-1,2,4-triazole, or 3,5-dinitro-1,2,4-triazole.

4,300,963

METHOD OF MANUFACTURING CYLINDRICAL TUBES AND APPARATUS FOR CARRYING OUT THE METHOD

Rolf Berg, Djursholm, Sweden, assignor to Assi Can Aktiebolag, Djursholm, Sweden

Continuation of Ser. No. 966,998, Dec. 6, 1978, abandoned. This application Sep. 2, 1980, Ser. No. 183,492

Claims priority, application Sweden, Nov. 1, 1978, 7811314

Int. Cl.³ B29C *25/00;* B31F *81/00;* B29C *17/04;* B65D *85/66*

U.S. Cl. 156—82 **5 Claims**

1. A method of manufacturing cylindrical tubes in which a plastics-foil web (2) made of a heat-meltable plastics materials, and a first fibre web (4) are helically wound on a rotating, heated mandril (16) with the plastics-foil web in contact with the mandril, the surface of the fibre web facing the plastics-foil web being coated with a plastics layer which can be heated to a tacky state or to a molten state such as to be joined with the plastics-foil web, and in which an edge portion along one longitudinal edge of the plastics-foil web is heat-welded to an edge portion along the opposing longitudinal edge of the plastics-foil web during winding of the webs on the mandril, characterized in that there is used a plastics-foil web whose two longitudinally extending, parallel edge portions (2'', 2''') extend beyond the two longitudinally extending parallel edge portions (4', 4'') of the fibre web, and that the plastics-foil web and the fibre web are fed into the mandril at a common angle such that one free edge portion (2''') of the plastics-foil web will overlap

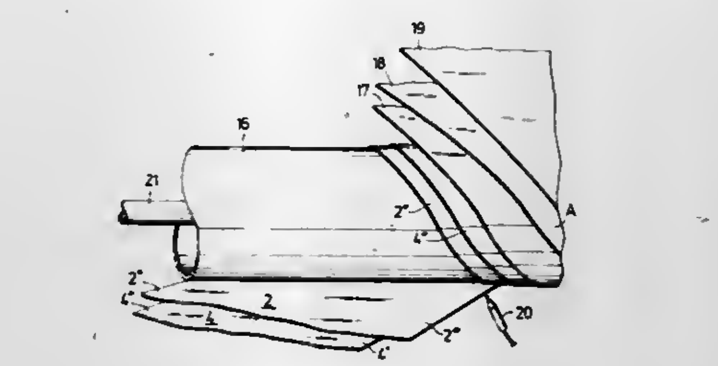

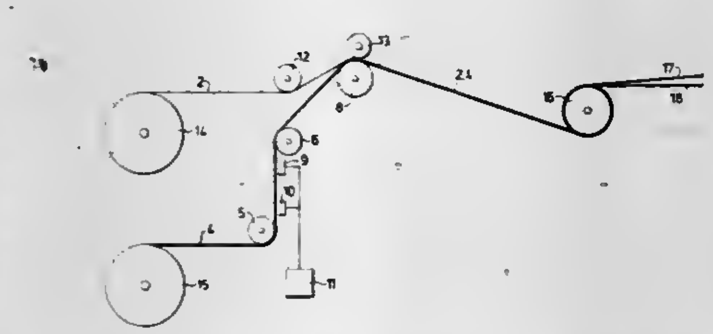

the other free edge portion (2'') outside of the adjacent edge portions (4', 4'') of the fibre web; in that heat is applied to said overlapping edge portions of the plastics-foil web; and that a further, heated fibre web (17) is wound on the helically wound plastics-foil web and the first fibre web in a manner such as to press the overlapping edge portions (2'', 2'''), against the cylindrical mandrel (16) and cause said edge portions to be welded together, so as to form a smooth, even cylindrical surface on the interior of the tube.

4,300,964

ADHESION OF TEXTILE CORDS TO RUBBER BY DIP COATING USING AN N-METHYLOL GROUP CONTAINING POLYMER

Ajit K. Chaudhuri, Piscataway, N.J., assignor to American Cyanamid Company, Stamford, Conn.

Filed Oct. 22, 1979, Ser. No. 87,199

Int. Cl.³ B29H *5/02;* C09J *3/12*

U.S. Cl. 156—110 A **11 Claims**

11. A method for promoting the adhesion of a textile material to rubber, comprising (1) coating said textile material with a composition comprising (A) a rubber latex selected from natural rubber, polybutadiene rubber and styrene-butadiene rubber containing up to 50% styrene, (B) a resorcinolformaldehyde resin, and (C) from about 3 to 15 parts based on 100 parts of dry rubber solids in said latex, of a methylolated polymer of acrylamide having a molecular weight of at least about 10,000 and being from 60–100% methylolated (2) placing said treated textile material in intimate contact with a vulcanizable rubber composition to which said textile material is to be bonded; and (3) vulcanizing the composition at a suitable temperature.

4,300,965

PROCESS FOR CEMENTING SEMICONDUCTOR DISCS TO CARRIER PLATES AND PRODUCT SO OBTAINED

Dietrich Schmidt; Bruno Meissner; Heinz-Jörg Rath; Dieter Regler, and Jürgen Voss, all of Burghausen, Fed. Rep. of Germany, assignors to Wacker-Chemitronic Gesellschaft fü Elektronik-Grundstoffe MbH, Burghausen, Fed. Rep. of Germany

Filed Feb. 7, 1977, Ser. No. 766,457

Claims priority, application Fed. Rep. of Germany, Mar. 1, 1976, 2608427

Int. Cl.³ B32B *31/00*

U.S. Cl. 156—154 **8 Claims**

1. A process for cementing a semiconductor disc to a carrier plate, which comprises the steps of:

first, applying to the carrier plate a layer of a cement solution consisting of

(a) from 60 to 95 parts by weight of a maleate resin having a melting range (determined according to Kofler) within the temperature range of from 50° to 180° C., the upper limit of the melting range being not more than 20° C. above the cementing temperature to be used, and having a melt viscosity (as determined at 20° C. above the upper limit of the melting range of the resin) within the range of from 1000 to 6000 P, and, complementally,

(b) from 5 to 40 parts by weight of an additional substance selected from the group consisting of benzil or alphanaphthol that is substantially miscible with the resin, and has a plasticizing effect on the resin at the chosen cementing temperature and that has a melting point within the range of from 0°-25° C. below the cementing temperature to be used, and

(c) from 75 to 250 parts by weight, based on the total weight of components (a) and (b) of a solvent for the resin and the plasticizer, the solvent having a boiling point that is lower than the cementing temperature to be used and such that the solvent evaporates at the cementing temperature;

secondly, heating the carrier plate and layer of cement solution to the cementing temperature which is a temperature within the range of from 50° to 160° C., until the solvent has substantially evaporated from the cement solution;

thirdly, placing the semiconductor disc onto the cement layer, at the said cementing temperature in such a manner that occlusion of air bubbles between said disc and cementing layer is avoided;

fourthly, applying pressure to the semiconductor disc to secure it to the cement layer, while the carrier plate and the cement layer are at a temperature within the range of from 30° C. below the cementing temperature to the cementing temperature; and

fifthly, cooling the cement layer in order to allow it to set.

4,300,966

BASE CUP APPLYING APPARATUS AND METHOD

Wolfgang Hoffmann, Turlock, Calif., assignor to B & H Manufacturing Company, Inc., Ceres, Calif.

Filed Oct. 15, 1979, Ser. No. 84,594

Int. Cl.³ C09J *5/00*

U.S. Cl. 156—156 **9 Claims**

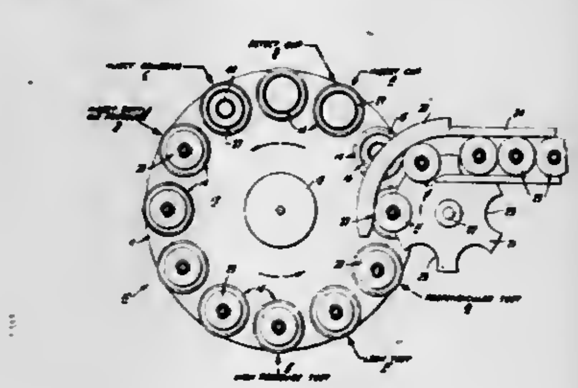

1. A machine for applying cups to the bottoms of containers which have rounded botoms such that they are unstable when placed in upright position, the cups having bottoms which are sufficiently flat to be stable in upright position, said machine comprising:

(a) a rotary transport rotatable about a vertical axis,

(b) a plurality of upwardly open cup holders mounted on the transport for rotation with the transport about such vertical axis, such holders being spaced from one another and lying on a circle which is concentric to such vertical axis, each such holder having a bottom providing bottom support and a side wall providing lateral support for a cup,

(c) means for intermittently rotating the transport about its vertical axis whereby each holder is indexed in turn from a cup receiving station to an adhesive applying station, thereafter to a container applying station and thereafter back to the cup receiving station, such means acting to cause a dwell at each such station between intervals of indexing motion,

(d) cup delivery means at the cup receiving station acting, during a dwell, to deliver a cup from a supply thereof to the holder at such station,

(e) adhesive applying means at the adhesive applying station acting, during a dwell, to apply adhesive to the interior surface of the bottom of a cup at such station,

(f) container applying means at the container applying station acting, during a dwell, to deliver a container from a supply thereof to the cup in the holder at such station, such delivery being from above the holder and cup, such container applying means acting also to apply pressure to the cup and container in an axial direction to securely bond the bottom of the container to the adhesive in the bottom of the cup, and

(g) means for extracting each cup and container from the transport after the cup and container leave the container applying station.

4,300,967

METHODS AND APPARATUS FOR ELASTICIZING DISCRETE AREAS OF CONFORMABLE GARMENTS

Wayne C. Sigl, Black Creek, Wis., assignor to Kimberly-Clark Corporation, Neenah, Wis.

Filed Nov. 15, 1979, Ser. No. 94,421

Int. Cl.³ A61F *13/16;* B32B *31/08, 31/18;* B65H *23/08*

U.S. Cl. 156—164 **32 Claims**

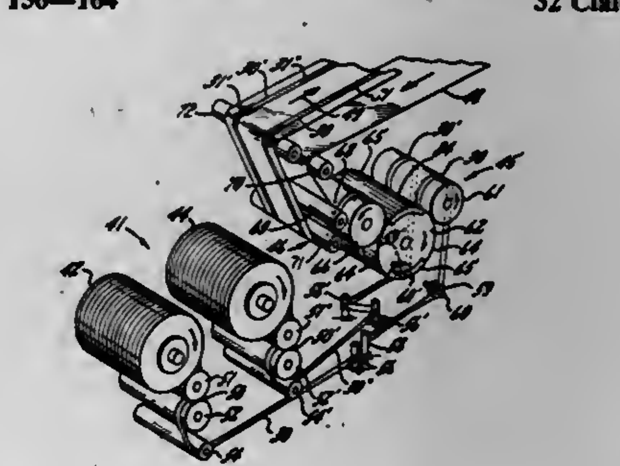

7. A method for forming a conformable garment having one or more discrete elasticized areas on a high speed production basis comprising the steps of:

(a) stretching a thermoplastic elastomeric material;

(b) immobilizing the stretched material in its extended condition;

(c) heat treating selected spaced zones of the stretched elastomeric material while in the immobilized extended condition so as to "kill" the elastic properties of the heat treated zones while leaving the elastic properties of the intermediate unheated zones unaltered;

(d) affixing the immobilized extended material to a continuous moving web defining a plurality of interconnected

conformable garment components while maintaining both the heated non-elasticized zones and the non-heated elasticized zones of the extended material immobilized with respect to both the transferring means and the continuous moving web; and,

(e) severing the web transversely thereof between adjacent ones of the plurality of interconnected conformable garment components so as to form a plurality of separate garment components each having at least one discrete elasticized area contiguous with the unheated zones of the elastic material affixed thereto.

11. Apparatus for forming a conformable garment having one or more discrete elasticized areas on a high speed production basis comprising, in combination: means for stretching a thermoplastic elastomeric material; means for immobilizing the stretched material in its extended condition; means for transferring the immobilized extended material toward a moving web; means for affixing the immobilized extended material to a continuous moving web defining a plurality of interconnected conformable garment components while maintaining the immobilized extended material in its immobilized extended condition relative to both said transferring means and the web; means for heat treating selected spaced zones of the stretched elastomeric material while in the immobilized extended condition so as to "kill" the elastic properties of the heat treated zones while leaving the elastic properties of the intermediate unheated zones unaltered; and, means for severing the web transversely thereof between adjacent ones of the plurality of interconnected conformable garment components so as to form a plurality of separate garment components each having at least one discrete elasticized area contiguous with the unheated zones of the elastic material affixed thereto.

4,300,968

METHOD FOR BONDING FIBROUS WEB MATERIALS

Walter Föttinger; Bohuslav Tecl, and Erich Fahrbach, all of Weinheim, Fed. Rep. of Germany, assignors to Firma Carl Freudenberg, Weinheim, Fed. Rep. of Germany

Filed Dec. 18, 1979, Ser. No. 104,770

Claims priority, application European Pat. Off., Dec. 21, 1978, 78101813.0

Int. Cl.³ B32B *33/00;* **D04H** *3/12*

U.S. Cl. 156—181 19 Claims

1. A method for bonding a fibrous web comprising the steps of:

(a) compressing and smoothing a fibrous web by passing said web through heated rollers, said rollers being at a temperature at least about 20° C. below the melting point of the fibers comprising said web, and wherein said fibrous web is heated by said rollers but the fibers comprising said web are not bonded together; and

(b) applying a UV hardenable solvent-free prepolymer binder composition to said fibrous web; said prepolymer having a viscosity of from about 500 to about 5000 centipoise during application; and

(c) curing said prepolymer binder by exposing said treated fibrous web to ultraviolet radiation.

4,300,969

CARDBOARD LAMINATE FOR FOODSTUFFS AND METHOD FOR PRODUCTION THEREOF

Tom Frydendal, Oslo, Norway, assignor to Ex-Cell-O Corporation, Troy, Mich.

Continuation of Ser. No. 948,009, Sep. 29, 1978, abandoned, which is a division of Ser. No. 767,782, Feb. 11, 1977, abandoned. This application Feb. 1, 1980, Ser. No. 117,741

Claims priority, application Norway, Feb. 13, 1976, 760476

Int. Cl.³ B29C *19/00;* **B32B** *27/10;* **B65D** *85/00*

U.S. Cl. 156—244.11 3 Claims

1. A method of preparing a substantially oxygen-proof cardboard laminate adapted for cartons for foodstuffs, said method comprising the following steps:

a. forming a suitably shaped cardboard layer of from 235 to 450 g/m^2;

b. extruding a layer of polyethylene of at least 10 g/m^2 on each side of said cardboard layer;

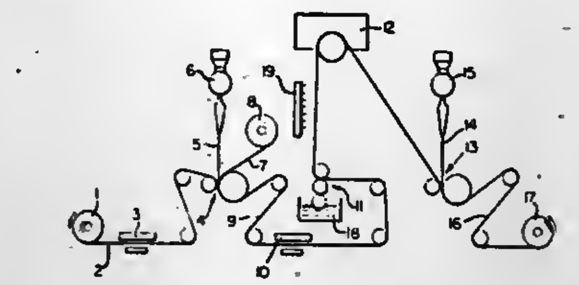

c. supplying as an emulsion a layer of polyvinylidene chloride of at least 2 g/m^2 over one of the layers of polyethylene;

d. drying the layer of polyvinylidene chloride; and

e. extruding a further layer of polyethylene of at least 10 g/m^2 on the layer of polyvinylidene chloride.

4,300,970

METHOD OF BONDING VULCANIZED RUBBER TO RESIN

Toshio Honda, Akigawa; Masao Ogawa, Kawagoe; Yukio Fukuura, Kodaira; Hikaru Ishikawa, Kokubunji; Kazuo Naito, Kodaira; Setsuo Akiyama, Higashimurayama, and Itsuo Tanuma, Tokorozawa, all of Japan, assignors to Bridgestone Tire Company Limited, Tokyo, Japan

Filed May 13, 1980, Ser. No. 149,596

Claims priority, application Japan, May 16, 1979, 54-60712; Aug. 7, 1979, 54-99846

Int. Cl.³ B29D *7/08*

U.S. Cl. 156—244.11 10 Claims

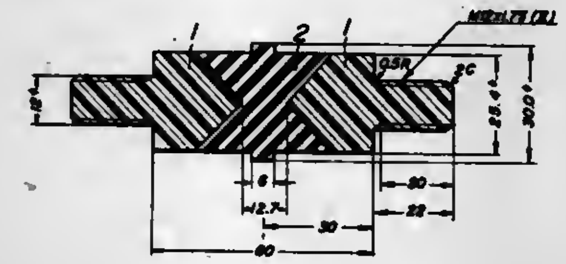

1. A method of bonding vulcanized rubber to resin, comprising treating the surface of a vulcanized rubber with at least one member selected from the group consisting of halogen, halogen generating compound, and halogenoid to form a treated rubber surface region, and bonding a heated and melted resin selected from the group consisting of polyamide resin, polyester resin, styrene series resin and acrylic resin to the above treated rubber surface region by the injection or extrusion molding.

4,300,971

METHOD FOR MANIFOLDING MULTIPLE PASSAGE SOLAR PANEL

Roy E. McAlister, 5285 Red Rock North, Phoenix, Ariz. 85018

Continuation-in-part of Ser. No. 32,635, Apr. 23, 1979. This application Jul. 25, 1980, Ser. No. 172,418

Int. Cl.³ B29D *7/02*

U.S. Cl. 156—244.11 12 Claims

1. A method of sealingly connecting a thermoplastic solar panel structure comprising a multiplicity of elongated thin wall sections defining a multiplicity of parallel passages extending longitudinally between the ends of said panel structure to a thermoplastic manifold tube, said method comprising the steps of

mounting an elongated mandrel having a multiplicity of transversely projecting elements corresponding in number and spacing to the panel passages which are to be communicated with the interior of the manifold tube longitudinally within said manifold tube,

positioning a side wall portion of said manifold tube in predetermined spaced relation with an open end of said panel structure so that the projecting elements of the mandrel are generally longitudinally aligned with the associated open ends of the passages in the panel structure to be communicated,

heating the spaced panel structure end and said manifold tube side wall portion to soften the thermoplastic material thereof,

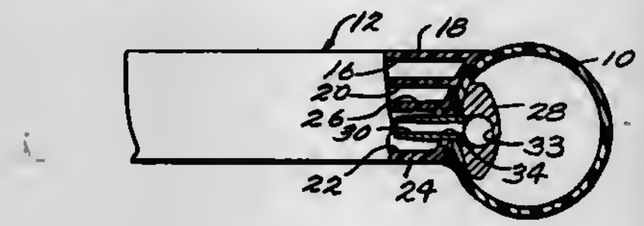

moving said mandrel within said manifold tube so as to position said projecting elements through said manifold tube side wall portion and into the open ends of said corresponding panel structure passages and said manifold tube toward said panel structure end so as to cause said manifold tube side wall portion to apply a pressure to said panel structure end sufficient to deform the thermoplastic material thereof and effect a fusing of the same into a unitary mass, and

withdrawing said mandrel in the direction of extent of said projecting elements to a position within the interior of said manifold tube and then longitudinally out of the manifold tube.

4,300,972

ADHESION OF POLYAMIDE OR POLYESTER CORDS TO RUBBER

Terry C. Neubert, Kent, Ohio, assignor to The General Tire & Rubber Company, Akron, Ohio

Division of Ser. No. 32,071, Apr. 23, 1979, Pat. No. 4,251,409. This application Oct. 16, 1980, Ser. No. 197,440

Int. Cl.³ C09J *5/02;* **B32B** *27/34;* **B29H** *5/02*

U.S. Cl. 156—307.5 8 Claims

1. A method for adhering a polyamide or polyester reinforcing element to a rubber compound which comprises treating said element with an aqueous alkaline dispersion of about 10 to 30% by weight of solids comprising on a dry weight basis 100 parts by weight of a rubbery graft low gel vinyl pyridine copolymer consisting essentially of

(a) a core of a copolymer of butadiene-1,3 and styrene in the parts by weight of ratio of butadiene-1,3 to styrene of about 40:60 to 60:40 and having a gel content of from about 0 to below 40% and

(b) a shell of a copolymer of butadiene-1,3 and a vinyl pyridine and having a gel content of from about 0 to below 70% and

(c) where in said graft copolymer the total amount of said monomers is from about 47 to 69% by weight of butadiene-1,3, from 23 to 52% by weight of styrene and from 1 to 8% by weight of the vinyl pyridine, and a water-soluble thermosetting phenolic-aldehyde resin in an amount of from about 10 to 40 parts by weight, heating said treated element at a temperature of from about 300° to 500° F. for from about 150 to 30 seconds to remove essentially all of the water from said dispersion and to provide said element with a heat set adhesive in an amount of from about 3 to 15% by weight (dry) based on the weight of said reinforcing element, combining said dried and heat set adhesive containing reinforcing element with an unvulcanized vulcanizable rubber compound and vulcanizing the same.

5. A bonded composite material comprising a polyamide or polyester reinforcing element embedded in a vulcanized rubber, said element containing from about 3 to 15% by weight dry based on the weight of said element of a heat cured adhesive composition useful for adhering said element to a rubber compound comprising on a dry weight basis 100 parts by weight of a rubbery graft low gel vinyl pyridine copolymer consisting essentially of

(a) a core of a copolymer of butadiene-1,3 and styrene in the parts by weight ratio of butadiene-1,3 to styrene of about 40:60 to 60:40 and having a gel content of from about 0 to below 40% and

(b) a shell of a copolymer of butadiene-1,3 and a vinyl pyridine and having a gel content of from about 0 to below 70% and

(c) where in said graft copolymer the total amount of said monomers is from about 47 to 69% by weight of butadiene-1,3; from 23 to 52% by weight of styrene and from 1 to 8% by weight of the vinyl pyridine, and a water-soluble thermosetting phenolic-aldehyde resin in an amount of from about 10 to 40 parts by weight.

4,300,973

METHOD OF ADHESION OF RUBBER TO REINFORCING MATERIALS

Rao S. Bezwada, Somerville, N.J., assignor to American Cyanamid Company, Stamford, Conn.

Filed Jun. 23, 1980, Ser. No. 162,336

Int. Cl.³ C09J *5/00*

U.S. Cl. 156—307.7 11 Claims

1. A method for forming a strong adhesive bond between a vulcanized natural or synthetic rubber composition and a textile fiber or metal reinforcing member imbedded therein which comprises embedding a textile fiber or metal reinforcing member in a vulcanizable rubber composition consisting essentially of

(A) natural or synthetic rubber, or a mixture thereof;

(B) a vulcanizing agent; and

(C) from about 1 to 10 parts by weight, per hundred parts by weight of rubber, of a compound selected from the group consisting of (1) compounds of the formula:

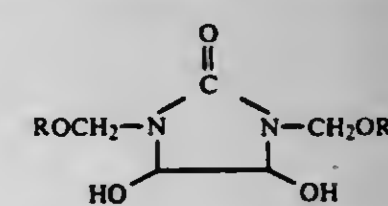

wherein R and R' are individually lower (C_1–C_4) alkyl, aryl (C_6–C_{10}) or cycloalkyl having 5 or 6 carbon atoms in the ring; (2) compounds of the formula:

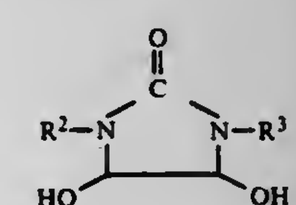

wherein R^2 and R^3 are individually alkyl (C_1–C_8), aryl (C_6–C_{10}) cycloalkyl having 5 or 6 carbon atoms in the ring, cyano, carboxy, carboalkoxy, amido or dialkylamido substituted lower (C_1–C_4) alkyl or hydroxy substituted lower (C_2–C_4) alkyl; or (3) compounds of the formula:

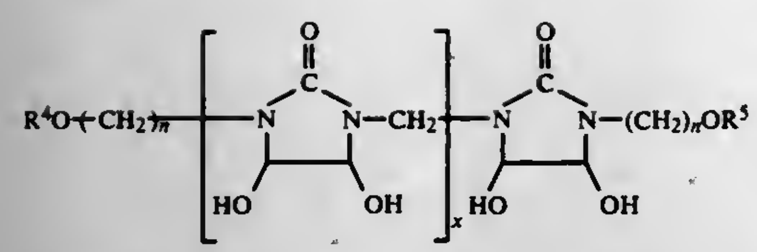

wherein R^4 and R^5 are, individually, hydrogen, lower (C_1–C_4) alkyl, or cycloalkyl having 5 or 6 carbon atoms in the ring; n is an integer from 1 to 4 inclusive, and x is 1 or 2, and vulcanizing said composition.

4,300,974
CABLE DRIVE TURRET FOR DECORATION OF ARTICLES
Fritz E. Bauer, Shrewsbury, Mass., assignor to Dennison Manufacturing Company, Framingham, Mass.
Filed Sep. 3, 1980, Ser. No. 183,704
Int. Cl.[3] B65H *25/00*; B32B *31/00*; B44C *31/00*
U.S. Cl. 156—360 9 Claims

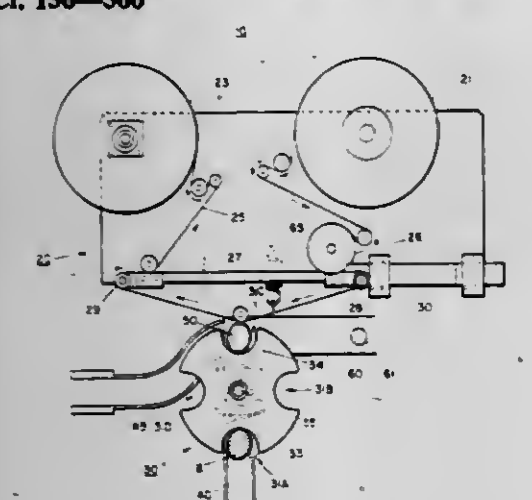

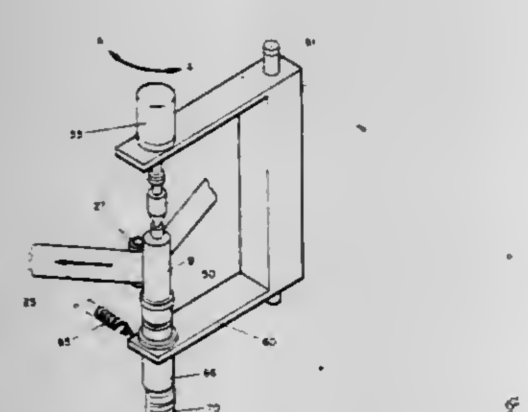

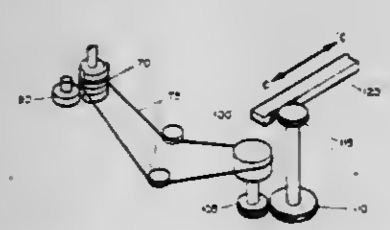

1. Improved apparatus for transferring indicia from a carrier web to articles, of the type including an indicia-bearing carrier web, means for advancing the carrier web past a labelling site, means for controlling the speed of the carrier web at the labelling site, a roll for impressing the carrier web against an article, a rotatable support for the article, means for rotating the support about an axis at a peripheral velocity matching the speed of the carrier web, and means for moving the support toward and away from the impressing roll, wherein the improvement comprises improved means for rotating the article support, comprising:
- a cam mounted coaxially with said article support so as to rotate in conjunction therewith, said cam being profiled and angularly oriented in accordance with a horizontal cross-section of the article;
- a cam roll in rotating contact with said cam;
- a flexible elongate member running between said cam and cam roll in the plane of their contact surface; and
- means for advancing said flexible elongate member at a controlled relationship to the speed of the carrier web.

4,300,975
STABILIZED LABELLING OF OBJECTS
Robert J. Scott, Framingham, Mass., assignor to Dennison Manufacturing Company, Framingham, Mass.
Continuation of Ser. No. 847,185, Oct. 31, 1977, abandoned, which is a continuation-in-part of Ser. No. 512,856, Nov. 7, 1974, abandoned. This application May 14, 1980, Ser. No. 149,873
Int. Cl.[3] B65C *9/02, 9/04*
U.S. Cl. 156—456 12 Claims

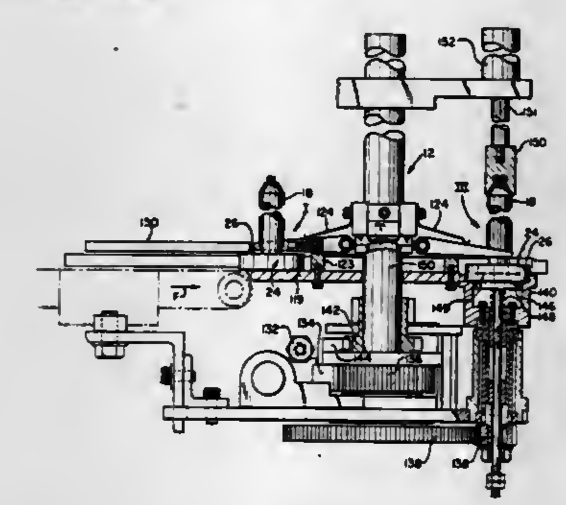

1. Apparatus for labelling an object which comprises
- a conveyor,
- a freely movable platform on said conveyor and unconnected thereto for stabilizing the object,
- means for rotatably transporting said platform about an axis displaced therefrom, with said object to apply a label thereto, and
- means for applying pressure directly to said platform for the stabilization thereof during rotation.

4,300,976
APPARATUS FOR THE WELDING OF STRIPS OF THERMOPLASTIC MATERIAL LYING ON TOP OF EACH OTHER
Hubert Wehr, Bornheim-Brenig, Fed. Rep. of Germany, assignor to Cyjkio-Gesellschaft Emil Hoffmann, Cologne, Fed. Rep. of Germany
Filed Aug. 4, 1980, Ser. No. 174,834
Claims priority, application Fed. Rep. of Germany, Aug. 17, 1979, 2933302
Int. Cl.[3] B29C *27/08*
U.S. Cl. 156—502 9 Claims

1. In a device for welding overlapping strips of thermoplastic material by pressure and frictional heat, said device having a pair of frictional jaws extending in longitudinal direction of the strips and means for compressing the jaws towards each other, said jaws each having means for holding said strips, the improvement which comprises; one jaw being stationary, the other jaw being swivelled at one end around an axis perpendicular to the plane of said strips, and means oscillating said movable jaw with one strip about said axis such that frictional heat

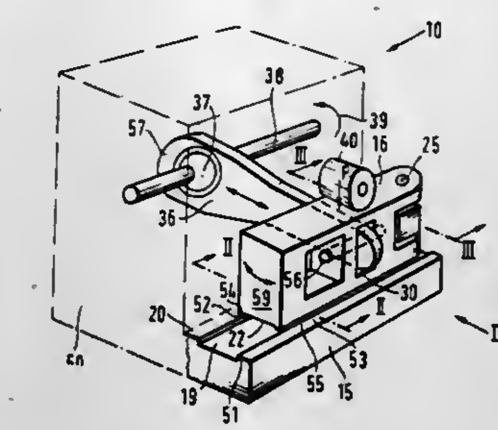

is generated decreasing over the length of said one strip toward said axis.

4,300,977
MACHINE FOR WELDING THERMOPLASTIC SHEETS
Ehrhart Schulze, Fellbach, Fed. Rep. of Germany, assignor to Karl Heinz Stiegler, Stuttgart, Fed. Rep. of Germany
Filed Oct. 5, 1979, Ser. No. 82,054
Claims priority, application Fed. Rep. of Germany, Oct. 24, 1978, 2846219; Oct. 24, 1978, 2846220
Int. Cl.[3] B32B *31/00*
U.S. Cl. 156—515 13 Claims

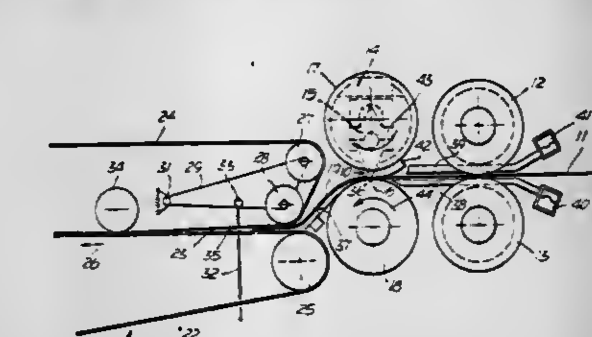

1. Apparatus for separation and welding of a thermoplastic web comprising:
- separation and welding means for separation and welding of said thermoplastic web to produce separated sheets, each having a leading edge, said separated sheets being followed by a leading edge of said web;
- said welding means including at least a welding tool and a rotatable opposing roller;
- said opposing roller having a closed cylindrical circumferential surface and an axis;
- said welding tool and said circumferential surface defining a welding gap;
- first means for conveying said thermoplastic web to said welding gap in a direction of conveyance;
- second means for conveying said separated sheets from said welding means;
- said second means for conveying including a conveying support;
- said conveying support defining a surface which intersects said opposing roller at a distance displaced from said welding gap toward said axis;
- a guide plate disposed substantially tangentially adjacent to said circumferential surface for guiding said leading edge of said web to said second means for conveying;
- means for producing a high-speed flow of air through said welding gap, said flow of air being effective to hold said leading edge closely adjacent said circumferential surface of the opposing roller for a first distance and to permit said leading edge to separate from said circumferential surface at a second distance; and
- said guide plate being disposed beyond said second distance whereby said leading edge slides over said guide plate and is guided thereby to said second means for conveying.

4,300,978
BONDING TOOL FOR VENTING HONEYCOMB NOISE ATTENUATION STRUCTURE DURING MANUFACTURE
Christopher E. Whitemore, Riverside, and Robert M. Carrillo, San Bernardino, both of Calif., assignors to Rohr Industries, Inc., Chula Vista, Calif.
Division of Ser. No. 55,681, Jul. 6, 1979. This application Jan. 16, 1980, Ser. No. 112,645
Int. Cl.[3] B32B *31/20, 3/12*
U.S. Cl. 156—581 3 Claims

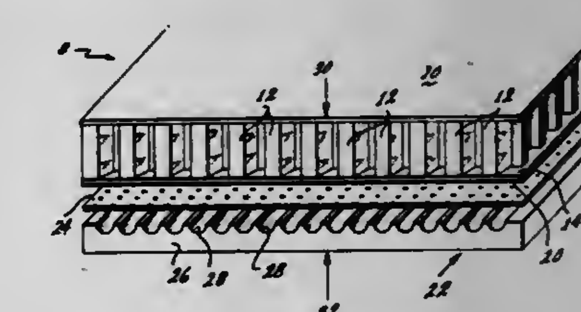

1. A bonding tool for holding together in proper positioned relationship a central cellular core sandwiched between an imperforate and a perforate sheet, said perforate sheet having an outer exposed layer of porous fibrous material bonded thereto, while being bonded together by coatings of adhesive positioned between said central cellular core and said imperforate and perforate sheets comprising;
- a bond tool at least as large as the sandwiched components, said bond tool having a grooved surface, the grooves extending along the entire length of one dimension of said bond tool, and a perforated plate positioned between said porous fibrous material and said bond tool for allowing the cells of said central cellular core to vent to the atmosphere through the perforate sheet and porous fibrous material combination while pressure is being applied toward the center of said sandwiched components through said perforated plate and said imperforate sheet during the cure of said adhesive coatings.

4,300,979
GROWTH OF $AlPO_4$ CRYSTALS
Ernest D. Kolb, New Providence, and Robert A. Laudise, Berkeley Heights, both of N.J., assignors to Bell Telephone Laboratories, Incorporated, Murray Hill, N.J.
Filed Nov. 3, 1980, Ser. No. 203,405
Int. Cl.[3] C30B *7/10*
U.S. Cl. 156—623 R 10 Claims

1. Process for growth of $AlPO_4$ crystals comprising disposing a seed in a hydrothermal medium comprising $AlPO_4$ solute in a solvent, maintaining the hydrothermal medium at a pressure and temperature sufficient to effect growth of $AlPO_4$ on

the seed, the invention characterized in that the hydrothermal medium comprises an aqueous solution of HCl.

4,300,980

OVERLAPPING DOUBLE ETCH TECHNIQUE FOR EVALUATION OF METALLIC ALLOYS TO STRESS CORROSION CRACKING

Arthur F. Steeves, Schenectady, and James C. Stewart, Loudonville, both of N.Y., assignors to The United States of America as represented by the United States Department of Energy, Washington, D.C.

Filed May 28, 1980, Ser. No. 154,172

Int. Cl.³ C23F *1/02*

U.S. Cl. 156—626 **8 Claims**

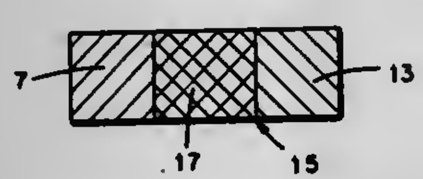

1. A method for evaluating metallic alloy substrates for resistance to stress corrosion cracking comprising:

(a) applying an etch resistant masking material to a preselected area of said substrate leaving another area of said substrate uncoated,

(b) etching said uncoated area with a material suitable to delineate the grain boundaries on said substrate,

(c) removing the etch resistant masking material thereby obtaining a substrate possessing etched and non-etched surface areas,

(d) etching the uncoated areas with a material suitable to determine the location of the carbide precipitates on said substrate thereby establishing an overlapping double etch zone and a single etch zone, and

(e) evaluating said substrate for resistance to stress corrosion cracking by examining said substrate along the line of demarcation established between the overlapping double etch zone and single etch zone formed during the second etching step.

4,300,981

LAYERED PAPER HAVING A SOFT AND SMOOTH VELUTINOUS SURFACE, AND METHOD OF MAKING SUCH PAPER

Jerry E. Carstens, Cincinnati, Ohio, assignor to The Procter & Gamble Company, Cincinnati, Ohio

Filed Nov. 13, 1979, Ser. No. 93,312

Int. Cl.³ D21H *5/00, 5/24*

U.S. Cl. 162—109 **31 Claims**

1. A tissue paper sheet having a substantially flat velutinous top surface, said sheet comprising a first layer comprising papermaking fibers and a second layer comprising substrate means for supporting said first layer and for providing said product with sufficient tensile strength for its intended purpose, said first layer comprising a primary filamentary constituent of about 60% or more by weight of relatively short papermaking fibers having average lengths of from about 0.25 mm to about 1.50 mm, said velutinous top surface being the outwardly facing surface of said first layer which surface is defined by substantially unbonded free end portions of a multiplicity of said short fibers, said sheet having an average top surface human-tactile-response texture (HTR-Texture) of about 1.0 or less, and said velutinous top surface having an average free-fiber-end index (FFE-Index) of at least about sixty (60).

4,300,982

WET PRESS FELT

Eric R. Romanski, Delmar, N.Y., assignor to Albany International Corp., Menands, N.Y.

Filed Jan. 2, 1976, Ser. No. 646,328

Int. Cl.³ D21F *3/02*

U.S. Cl. 162—358 **4 Claims**

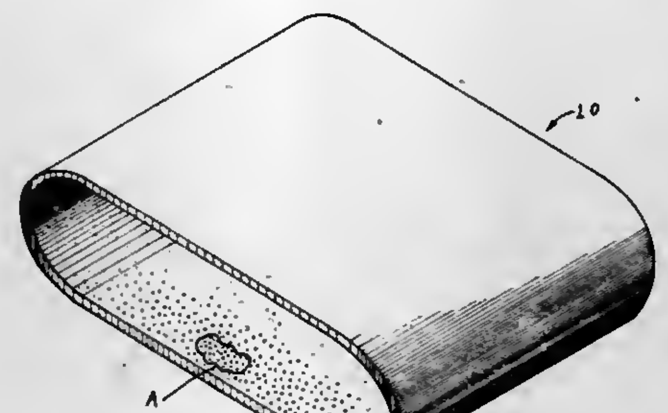

1. Press means for use in a papermaking machine including in combination a water permeable endless base fabric for transporting paper sheet, an upper surface thereof for receiving in contact therewith paper sheet to be transported, a backside thereof, press rolls for receipt of said fabric, a plurality of discrete raised relatively incompressible island members in firm engagement with said backside, said island members maintaining intersecting channels to allow for lateral and longitudinal flow of water expressed from paper sheet on said upper surface upon the entrance of said fabric into the nip of said press rolls.

4,300,983

METHOD AND ARRANGEMENT FOR REDUCING THE RADIATION EXPOSURE RISKS IN THE COURSE OF A NUCLEAR REACTOR CORE MELT DOWN ACCIDENT

Mario Dalle Donne, Blankenloch-Buchig; Stefan Dorner, Pforzheim, and Gustav Schumacher, Karlsruhe, all of Fed. Rep. of Germany, assignors to Kernforschungszentrum Karlsruhe, Karlsruhe, Fed. Rep. of Germany

Filed Oct. 13, 1977, Ser. No. 841,796

Claims priority, application Fed. Rep. of Germany, Nov. 24, 1976, 2653258

Int. Cl.³ G21C *9/00*

U.S. Cl. 376—280 **8 Claims**

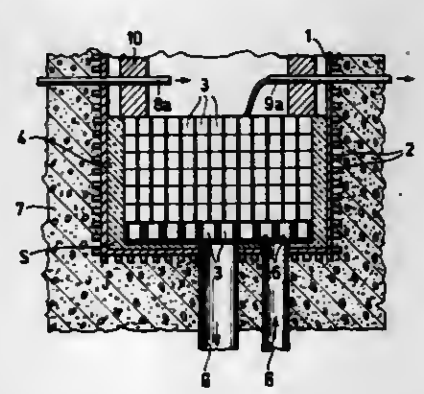

1. A core catcher arranged in a reactor containment below a nuclear reactor for containing the core melt flowing from the core of the nuclear reactor during a reactor core melt-down accident, said core catcher comprising: a container; means associated with the container for cooling the content of said container; a protective layer disposed on the inner surface of said container; a plurality of superimposed layers of blocks arranged within said container, each of said blocks comprising a wrapper consisting of a metal having a melting point below the temperature of the core melt during a core melt-down accident and enclosing a catcher material which is soluble in the oxidic part of the core melt and, in solution with the oxidic part of the core melt, forms a readily water soluble solution melt; means for admitting water into said container for leaching said water soluble solution melt upon cool-down and solidification to provide a solution; and means for discharging said solution from said container.

4,300,984

TOP REFLECTOR FOR A NUCLEAR-REACTOR VESSEL

Werner Katscher, Jülich, and Klaus Kasper, Ratingen, both of Fed. Rep. of Germany, assignors to Kernforschungsanlage Jülich GmbH, Jülich, Fed. Rep. of Germany

Filed Nov. 14, 1978, Ser. No. 960,757

Claims priority, application Fed. Rep. of Germany, Nov. 15, 1977, 2751065

Int. Cl.³ G21C *5/00*

U.S. Cl. 376—459 **9 Claims**

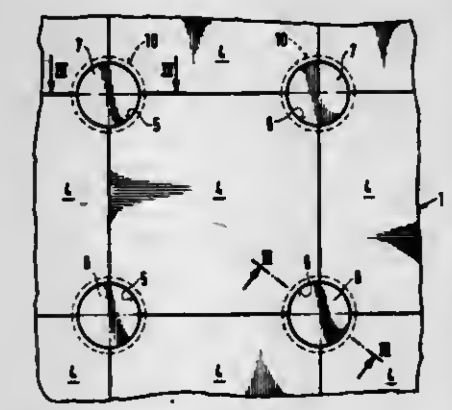

1. In a nuclear reactor having a housing enclosing a nuclear reactor core and a support for a planar top reflector, the improvement which comprises a top reflector assembled from blocks and form-fittingly interconnected with a toothed structure at adjoining lateral faces of adjacent blocks for retaining said blocks against collapse upon failure of said support, said blocks being prismatic and having vertical corners formed with cylindrical segmental recesses defining with corresponding recesses of other blocks cylindrical passages, and respective rotatable plugs received in said passages, the walls of said recesses being provided with grooves and said plugs having flights engaging said grooves, said support comprising rails spanning said core and means for mounting said blocks on said rails.

4,300,985

PROCESS OF THERMAL DECOMPOSITION OF RUBBER MATERIALS

Francis Gagnerand, Villa Montmorency, 6, Avenue des Tilleuls, 75016 Paris, France

Filed Feb. 20, 1980, Ser. No. 123,180

Claims priority, application France, Feb. 21, 1979, 79 04343

Int. Cl.³ C04B *7/14;* **C10B** *49/14, 57/00*

U.S. Cl. 201—10 **6 Claims**

1. A process of disposal of rubber-base wastes by flash thermal decomposition at high temperatures, comprising pouring molten metallurgical waste slag at a temperature above 1,250° C., which slag has been removed from a metallurgical furnace, onto the rubber-base wastes at the production site of said slag, the weight ratio of the rubber-base waste/molten slag being between 5 and 15%.

4,300,986

COKE OVEN DOOR CLEANER

Tsuzuki Akira, Yokohama, and Tobitani Hiroshi, Kurisaki, both of Japan, assignors to Koritsu Machine Industry Limited, Japan

Filed Apr. 17, 1980, Ser. No. 141,130

Int. Cl.³ C10B *43/04, 43/08*

U.S. Cl. 202—241 **3 Claims**

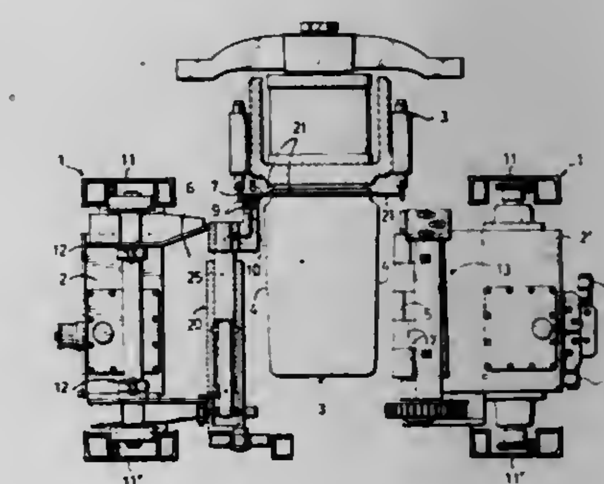

1. A cleaner for a coke oven door having a body with side walls, a sealing plate extending from the body having a recessed surface adjacent the side walls and a sealing blade connected to the sealing plate, the cleaner comprising:

a vertical support frame for receiving the coke oven door having a pair of elongated guide channels adapted to receive the coke oven door body therebetween,

a pair of carriers mounted on said vertical support frame and engaged with each of said guide channels respectively for movement along the length of said guide channels;

hydraulic drive means connected to said vertical support frame and to said carriers for propelling said carriers along said guide channels;

radial cutting means connected to said carriers, on the side of said carriers adapted to face the side walls of the coke oven door body, said radial cutting means including at least one radial cutter rotatably mounted to each of said carriers on a substantially horizontal axis, said carriers and radial cutter means adapted to engage the side walls of the coke oven door body to scrape dried and hardened material therefrom;

a scraper pivotably mounted to each of said carriers adapted to bear against and scrape the recessed surface of the sealing plate; and

a jet nozzle block connected adjacent an end of each of said scrapers adapted to be brought nearest to the recessed surface of the sealing plate, said jet nozzle blocks each having three orifices adapted to respectively face the sealing blade, the recessed surface of the sealing plate, and a portion of the side walls of the coke oven door body adjacent the recessed surface of the sealing plate; and

high-pressured fluid source means connected to said jet nozzle block for supplying high pressure fluid to said jet nozzle blocks and through said orifices to cleanse the sealing blade, the sealing plates and the portion of the side wall of viscous material deposited thereon.

4,300,987
GAS EXTRACTION
Alfred C. C. Tseang, and Sameer M. Jasem, both of London, England
PCT No. PCT/GB79/00060, § 371 Date Dec. 14, 1979, § 102(e) Date Nov. 5, 1979, PCT Pub. No. WO79/00933, PCT Pub. Date Nov. 15, 1979.
PCT Filed Apr. 11, 1979, Ser. No. 137,114
Claims priority, application United Kingdom, Apr. 14, 1978, 14752/78
Int. Cl.³ C25B *1/00, 1/06, 1/10;* **C01B** *13/00*
U.S. Cl. 204—129 **18 Claims**

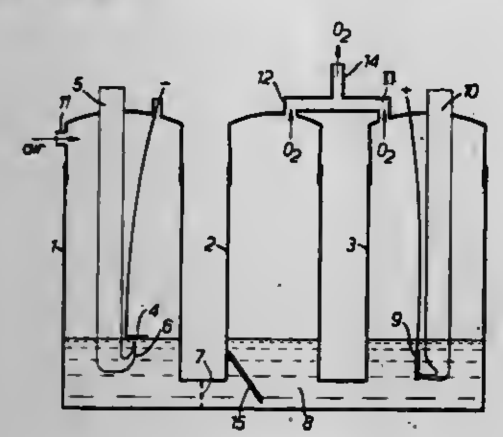

1. A method in which an electrochemical cell is used to separate a gas from a gaseous mixture by reduction of said gas at the cathode and regeneration of said gas at the anode, characterised in that one or more substances formed in the cathodic reduction and/or the anodic regeneration is chemically converted to produce said gas and in that the gas formed by both the anodic regeneration and the chemical conversion is recovered as the product.

4,300,988
POLYBUTYLENE AND CONJUGATED DIENE BUTYL POLYMER BLENDS
Anthony J. Berejka, Huntington, and Richard Bradley, Medford, both of N.Y., assignors to Radiation Dynamics, Inc., Melville, N.Y.
Filed Jul. 25, 1980, Ser. No. 172,308
Int. Cl.³ C08F *2/46;* **C08L** *9/00*
U.S. Cl. 204—159.2 **26 Claims**

24. An article consisting essentially of a blend of polybutylene and a conjugated diene butyl polymer which after curing by ionizing radiation will exhibit a modulus strength (T_{100}) greater than either the said polybutylene or conjugated diene butyl polymer used in the blend.

4,300,989
FLUORINE ENHANCED PLASMA GROWTH OF NATIVE LAYERS ON SILICON
Robert P. H. Chang, Warren, N.J., assignor to Bell Telephone Laboratories, Incorporated, Murray Hill, N.J.
Filed Oct. 3, 1979, Ser. No. 81,353
The portion of the term of this patent subsequent to Jan. 20, 1998, has been disclaimed.
Int. Cl.³ H01L *21/316;* **C01B** *33/12;* **B05D** *3/06*
U.S. Cl. 204—164 **11 Claims**

1. A method of making a semiconductor device including the step of growing a native layer at least 50 Angstroms thick on a body comprising silicon by steps comprising exposing said body to a plasma comprising a concentration of at least 10^9 electrons per cubic centimeter adjacent to the surface of said native layer, and placing said body at a positive electrical potential with respect to the source of said plasma,
characterized in that said plasma comprises fluorine which provides for the incorporation of atomic fluorine in said native layer during said growing, with the concentration of said fluorine in said plasma being less than a concentration which produces etching of said native layer, and with

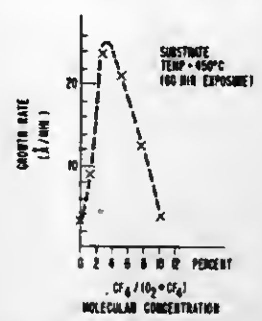

said fluorine producing an increase in the growth rate of said native layer as compared to the growth rate in the absence of said fluorine.

4,300,990
ELECTROCHEMICAL SENSOR ELEMENT CONSTRUCTION
Helmut Maurer, Schwieberdingen, Fed. Rep. of Germany, assignor to Robert Bosch GmbH, Stuttgart, Fed. Rep. of Germany
Filed Feb. 14, 1980, Ser. No. 121,599
Claims priority, application Fed. Rep. of Germany, Apr. 6, 1979, 2913866
Int. Cl.³ G01N *27/58*
U.S. Cl. 204—195 S **10 Claims**

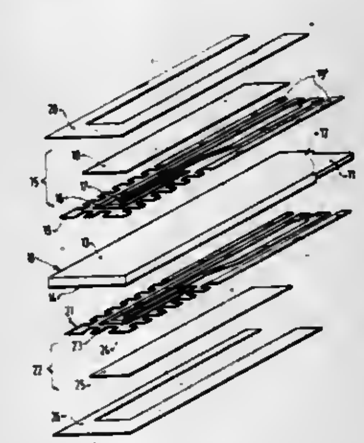

1. Electrochemical sensor construction adapted for positioning in a stream of combustion gases, having
a plane carrier plate (10, 27, 37) with two opposed sides, each defining a flat surface;
at least one planar sensor element (15, 22; 27, 29, 29'; 37, 38, 40) supported on the carrier plate, positioned against one flat surface and having a plan outline smaller than said one surface, leaving marginal portions of said one surface of the carrier plate extending beyond the sensor element;
and a planar heating element (19, 21; 32, 35, 43, 43') supported on the carrier plate;
wherein, the heating element is positioned on at least one of the sides of the plate, placed to laterally surround at least one sensor element about a major portion thereof and located closely adjacent thereto, the heating element being positioned adjacent to and at least one sensor element, and electrically insulated from the at least one sensor element; and
the sensor element occupies a portion centrally on the carrier plate with respect to the lateral dimension thereof—and the heating element is positioned at the edge side and end portions.

4,300,991
AIR-FUEL RATIO DETECTING APPARATUS
Masao Chiba, Chigasaki, and Takeshi Fujishiro, Yokosuka, both of Japan, assignors to Nissan Motor Company, Limited, Yokohama, Japan
Filed Jun. 11, 1980, Ser. No. 158,379
Claims priority, application Japan, Jun. 13, 1979, 54-73509
Int. Cl.³ G01N *27/58*
U.S. Cl. 204—195 S **15 Claims**

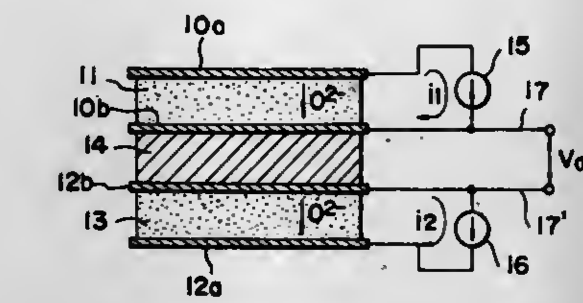

1. An air-fuel ratio detecting apparatus, comprising:
a first pair of electrodes;
a first porous solid electrolyte interposed between said first pair of electrodes;
a second pair of electrodes;
a second porous solid electrolyte interposed between said second pair of electrodes;
a dense solid electrolyte with which one of said first pair of electrodes and one of said second pair of electrodes is in contact;
means for causing constant-currents to flow through said first and second pairs of electrodes, respectively; and
means for detecting voltage developed between said electrodes contacting with said dense solid electrolyte.

4,300,992
ACTIVATED CATHODE
Hiroyuki Yoshida; Toshitada Akazawa; Tadayosi Haneda, and Kenzi Watanabe, all of Koriyama, Japan, assignors to Hodogaya Chemical Co., Ltd., Tokyo, Japan
Filed May 4, 1976, Ser. No. 683,241
Claims priority, application Japan, May 12, 1975, 50-54664; Jul. 17, 1975, 50-86712
Int. Cl.³ C25B *11/08, 11/10, 1/02*
U.S. Cl. 204—242 **12 Claims**

1. An electrolytic cell comprising an activated cathode, an anode and an aqueous solution of an electrolyte, said activated cathode comprising:
(a) a base plate selected from the group consisting of titanium, tantalum, zirconium, niobium and an alloy essentially consisting of a combination of those metals;
(b) an activated layer of at least one metal oxide selected from the group consisting of oxides of a metal element selected from the group consisting of ruthenium, rhodium, palladium, osmium, iridium and platinum, formed on the surface of the base plate (a); and
(c) a reduction inhibiting layer of at least one other oxide selected from the group consisting of oxides of an element selected from the group consisting of magnesium, calcium, strontium, barium, zinc, selenium, tellurium, chromium, molybdenum and tungsten formed on the surface of the activated layer of metal oxide (b).

9. An activated cathode for use in the aqueous solution electrolysis comprising:
(a) a base plate selected from the group consisting of titanium, tantalum, zirconium, niobium and an alloy essentially consisting of a combination of those metals;
(b) an activated layer of at least one metal oxide selected from the group consisting of oxides of a metal element selected from the group consising of ruthenium, rhodium, palladium, osmium, iridium and platinum, formed on the surface of the base plate; and
(c) a reduction inhibiting layer of at least one other oxide selected from the group consisting of oxides of an element selected from the group consisting of magnesium, calcium, strontium, barium, zinc, selenium, tellurium, chromiun, molybdenum and tungsten formed on the surface of the activated layer of metal oxide (b).

4,300,993
METHOD OF MAKING A POROUS NICKEL ELECTRODE FOR ALKALINE ELECTROLYSIS PROCESSES AND RESULTING PRODUCT
Jiri Divisek, and Jürgen Mergel, both of Jülich, Fed. Rep. of Germany, assignors to Kernforschungsanlage Jülich Gesellschaft mit Beschrankter Haftung, Jülich, Fed. Rep. of Germany
Filed Mar. 28, 1980, Ser. No. 134,756
Claims priority, application Fed. Rep. of Germany, Apr. 7, 1979, 2914094
Int. Cl.³ C25B *11/06;* **C25D** *3/56, 5/48*
U.S. Cl. 204—290 R **13 Claims**

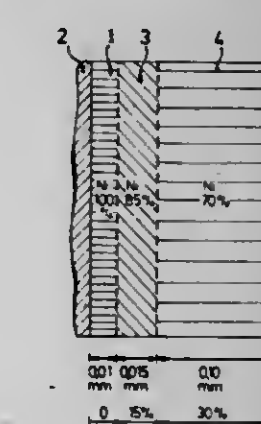

1. A method of manufacturing nickel electrode with porous surfaces for use in alkaline electrolysis, even for production of hydrogen by fusion electrolysis, comprising the steps of:
producing a porous sintered layer on a carrier body starting from a powder containing a powdered metal selected from the group consisting of nickel and alloys of nickel;
depositing a nickel/zinc alloy electrolytically on said sintered layer, and
dissolving the zinc out of the nickel/zinc alloy by dipping the carrier body and the layers thereon into a lye solution, in order to produce porosity in the electrolytically deposited material.

13. A nickel electrode with a porous surface for alkaline electrolysis processes obtained by a process according to claim 1 and comprising a carrier body (2), a nickel-containing metal powder sintered mass (1) on said carrier body produced by deposition thereon from a suspension, and an activation layer superposed on said sintered mass produced by electrolytic deposition of nickel and zinc on said sintered mass followed by dissolving out the zinc content from said activation layer as originally deposited.

4,300,994
METHOD FOR PRODUCING COKE
Ronald Liotta, Clark, N.J., assignor to Exxon Research & Engineering Co., Florham Park, N.J.
Filed Jun. 30, 1980, Ser. No. 164,170
Int. Cl.³ C10G *1/00;* **C10B** *57/04*
U.S. Cl. 208—8 LE **37 Claims**

1. A method for improving the caking properties of coal or peat, which method comprises:
(a) treating the coal with a quaternary base solution, and
(b) by pyrolysing the treated coal at a temperature from about 400° C. to about 600° C.,

wherein the quaternary base solution contains at least one quaternary base represented by the formula:

R_4MOR'

where each R is the same or different group selected from the C_1 to C_{20} alkyl, aryl, acyl, arylalkyl, alkylaryl, ether, ester, as well as, sulfide, amine, heteroatoms of silicon, selenium or a metal selected from Groups IA and IIA of the Periodic Table of the Elements, M is selected from Group VA of the Periodic Table of the Elements, and R' is hydrogen or a C_1 to C_{20} alkyl, aryl, arylalkyl or alkylaryl group.

4,300,995

OXYGEN-ALKYLATION OF CARBONOUS MATERIAL AND PRODUCTS THEREOF

Ronald Liotta, Clark, N.J., assignor to Exxon Research & Engineering Co., Florham Park, N.J.

Filed Jun. 30, 1980, Ser. No. 164,239

Int. Cl.³ C10G *1/00;* **C10B** *57/04*

U.S. Cl. 208—8 LE **24 Claims**

1. A method for improving the properties of carbonous materials and products therefrom, said materials having acidic functionalities and having a pka of less than or equal to 22, wherein the method comprises:

(a) treating the carbonous material with at least one quaternary base; and

(b) heating the treated carbonous material to a temperature of from 100° C. to about 300° C.

wherein the quaternary base is represented by the formula:

$R_3R'MOR''$

where each R is the same or different group selected from the C_1 to about C_{20} alkyl, aryl, acyl, arylalkyl, alkylaryl, ether and ester groups, sulfide, amine as well as silicon, selenium or a metal selected from Groups I and II of the Periodic Table of the Elements; R' is a C_1 to C_4 alkyl group; M is selected from Group VA of the Periodic Table of the Elements; and R'' is hydrogen, or a C_1 to about C_{20} alkyl, aryl, arylalkyl or alkylaryl group.

4,300,996

THREE-STAGE COAL LIQUEFACTION PROCESS

Christopher W. Kuehler, Larkspur, Calif., assignor to Chevron Research Company, San Francisco, Calif.

Filed Dec. 26, 1979, Ser. No. 106,580

Int. Cl.³ C10G *1/06, 1/00*

U.S. Cl. 208—10 **4 Claims**

1. A three-stage process for liquefying coal which comprises:

forming a coal-solvent slurry by mixing subdivided coal with a solvent;

passing said slurry through a dissolving stage free of external catalyst and contact particles at a temperature in the range of 400°-480° C. and at a slurry hourly space velocity in the range of 1-150 hr.$^{-1}$ to substantially dissolve said coal and produce an effluent comprising dissolved coal, solvent, insoluble solids and heptane insolubles;

passing effluent containing the dissolved coal and the insoluble solids from said dissolving stage with added hydrogen through a first catalytic reaction stage containing a catalyst having a selectivity for converting heptane insolubles to lower molecular weight compounds, at a temperature in the range of 340°-430° C., a slurry hourly space velocity in the range of 0.5 to 5 hr.$^{-1}$, and a hydrogen partial pressure in the range of 35 to 700 atmospheres;

recycling a portion of the effluent from said first catalytic reaction stage for use as solvent; and

passing the remainder of said effluent from said first catalytic reaction stage through a second catalytic reaction stage containing hydrocracking catalyst and operating under hydrocracking conditions including a hydrogen partial pressure in the range of 35-700 atmospheres and at a temperature in the range of 340°-430° C.

4,300,997

CATALYTIC CRACKING WITH REDUCED EMISSION OF NOXIOUS GAS

Garbis H. Meguerian, Olympia Fields; John M. Lorntson, Naperville, and Iacovos A. Vasalos, Downers Grove, all of Ill., assignors to Standard Oil Company (Indiana), Chicago, Ill.

Filed Oct. 12, 1979, Ser. No. 84,141

Int. Cl.³ C10G *11/18*

U.S. Cl. 208—120 **19 Claims**

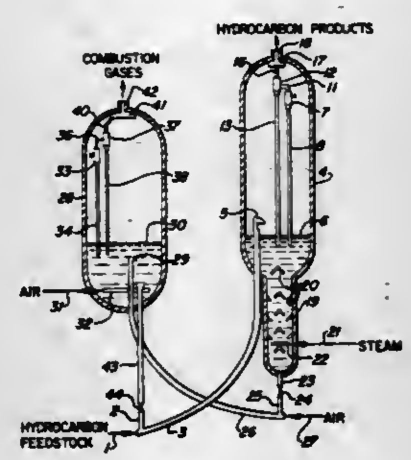

9. A process for the fluidized catalytic cracking of a hydrocarbon feedstock containing organic sulfur compounds wherein (i) said feedstock is subjected to cracking in a reaction zone through contact with a particulate cracking catalyst; (ii) cracking catalyst which is deactivated by sulfur-containing coke deposits, is separated from reaction zone hydrocarbon effluent and passes to a stripping zone wherein volatile deposits are removed from said catalyst by contact with a stripping gas comprising steam; (iii) stripped catalyst is separated from stripping zone effluent and passes to a catalyst regeneration zone and sulfur-containing coke deposits are removed from the stripped catalyst by burning with an oxygen-containing regeneration gas thereby forming carbon monoxide, carbon dioxide and sulfur oxides; and (iv) resulting regenerated catalyst is separated from regeneration zone effluent gas and recycled to the reaction zone; and wherein emissions of carbon monoxide and sulfur oxides in the regeneration zone effluent gas are reduced by the method which comprises:

(a) reacting carbon monoxide and oxygen to form carbon dioxide in said regeneration zone in contact with an oxidation promoter comprising palladium in association with ruthenium, wherein the palladium and ruthenium are in free or combined form and the ratio by weight on an elemental metal basis of palladium to ruthenium is from 0.1 to about 10;

(b) absorbing sulfur oxides in said regeneration zone with fluidizable particulate solids which comprise at least one metal oxide selected from the group consisting of the oxides of aluminum, sodium, magnesium, calcium, strontium, barium, scandium, titanium, chromium, molybdenum, manganese, cobalt, nickel, antimony, copper, zinc, cadmium and the rare earth metals, wherein said oxidation promoter is present in sufficient amount to enhance said absorption of sulfur oxides and the oxidation of carbon monoxide to carbon dioxide in the regeneration zone; and

(c) removing said absorbed sulfur oxides from the fluidizable particulate solids as a sulfur-containing gas which comprises hydrogen sulfide by contacting said particulate solids with the hydrocarbon feedstock in said reaction zone.

4,300,998

PRE-HEAT VAPORIZATION SYSTEM

Robert J. Gartside, Auburndale, Mass., assignor to Stone & Webster Engineering Corp., Boston, Mass.

Continuation-in-part of Ser. No. 81,126, Oct. 2, 1979, Pat. No. 4,264,432. This application Jul. 3, 1980, Ser. No. 165,783

Int. Cl.³ C10G *9/16, 9/18*

U.S. Cl. 208—127 **4 Claims**

1. In a TRC process wherein the temperature in the cracking zone is between 1300° and 2500° F. and wherein hydrosulfurized residual oil along with the entrained inert solids and the diluent gas are passed through a cracking zone for a residence time of 0.05 to 2 seconds, the improvement in the process for preheating the heavy oil hydrocarbon feedstock comprising the steps of:

a. heating the liquid heavy oil hydrocarbon feedstock;

b. initially flashing the heated liquid heavy oil hydrocarbon feedstock with steam;

c. separating the vapor and liquid phases of the flashed liquid heavy oil hydrocarbon feedstock-steam mixture;

d. superheating the vapor phase of the flashed liquid heavy oil hydrocarbon feedstock-steam mixture; and

e. flashing the superheated vapor and the liquid phase of the originally flashed liquid heavy oil hydrocarbon feedstock-steam mixture.

4,300,999

GAS OIL PURIFICATION

Haydn S. Davies, Solihull; James H. Garstang, Knowle, and Cyril Timmins, Solihull, all of England, assignors to British Gas Corporation, London, England

Filed Jan. 28, 1980, Ser. No. 115,661

Claims priority, application United Kingdom, Mar. 8, 1979, 08212/79

Int. Cl.³ C10G *45/08, 49/22*

U.S. Cl. 208—212 **7 Claims**

1. A process for the removal of organic sulphur compounds from hydrocarbon oils having a final boiling point within the range of 200°-550° C., which process comprises the steps of:

(i) partly vaporising the oil,

(ii) contacting the resulting mixture of partly vaporised oil and unvaporized liquid oil, and a hydrogen-containing gas with a hydrogenation catalyst at a temperature within the range of 300°-420° C., thereby to hydrogenate the organic sulphur compounds to hydrogen sulphide, and

(iii) absorbing the hydrogen sulphide thus produced by passing the vaporized oil, liquid oil, hydrogen-containing gas and hydrogen sulphide over zinc oxide, said steps (i), (ii), and (iii) being conducted under conditions which maintain part of the hydrocarbon oil in the liquid phase.

4,301,000

METHOD AND APPARATUS FOR FRACTIONATION AND RECOVERY OF LIMESTONE GRITS IN KRAFT PULPING PROCESS

John W. Rankin, 2774 Potter St., Eugene, Oreg. 97405

Filed Jul. 16, 1979, Ser. No. 58,079

Int. Cl.³ B04C *9/00*

U.S. Cl. 209—17 **21 Claims**

15. A method of fractionating particulate matter in a wet mixture, said particulate matter including particles of various sizes, comprising the steps:

directing a separatory medium flow along a path that circulates about and travels along a selected line;

introducing said wet mixture into contact with the separatory medium flow so that particles of a size smaller than a selected size are entrained by said separatory medium flow;

withdrawing along said path the particles entrained by said separatory medium flow;

withdrawing particles not entrained by said separatory medium flow;

separating particles of a size smaller than said selected size from the withdrawn particles not entrained by said separatory medium flow; and

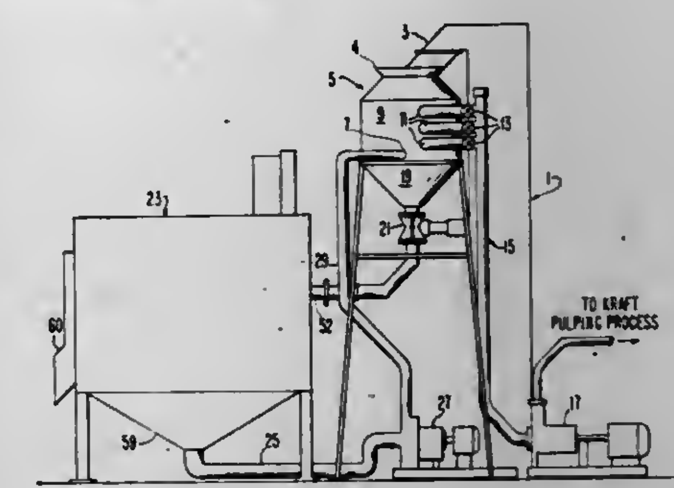

forming the separatory medium from said separated particles.

4,301,001

PROCESS FOR CONCENTRATING MICA IN A MIXTURE OF SAND AND MICA

Charles H. Lofthouse, Cornwall, England, assignor to English Clays Lovering Pochin & Company, Limited, St. Austell, England

Filed May 14, 1980, Ser. No. 149,649

Claims priority, application United Kingdom, May 21, 1979, 17600/79

Int. Cl.³ B07B *9/00*

U.S. Cl. 209—17 **7 Claims**

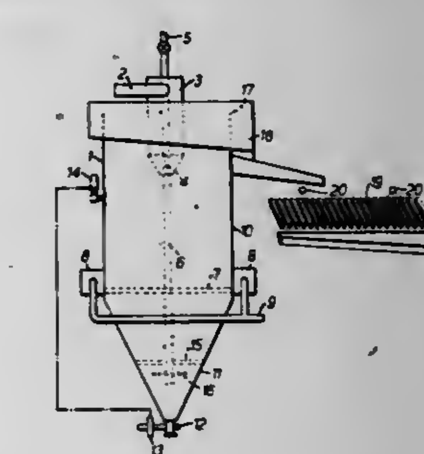

1. A process for concentrating mica in a particulate mixture of sand and mica, which process comprises introducing the feed mixture of sand and mica into an upper part of a density separating vessel in which is provided a rising current of an aqueous medium introduced at a level below that at which the feed mixture is introduced, the velocity of the rising current being uniform or substantially uniform over a horizontal cross-section of the vessel and being such that all but the least buoyant particles of the mixture are held in suspension as a quiescent bed which is gently displaced upwards in the vessel by incoming feed mixture, there being only slight horizontal movement of the particles in the bed across the vessel; and passing a slurry which overflows from the vessel over a screen having an aperture size in the range from 210 μm to 500 μm (No. 72 mesh to No. 30 mesh B.S. sieve), there being retained on the screen a mixture of sand and mica having a higher percentage content of mica, as calculated in the dry state, than the feed mixture.

4,301,002
HIGH EFFICIENCY VIRTUAL IMPACTOR
Billy W. Loo, Oakland, Calif., assignor to The United States of America as represented by the United States Department of Energy, Washington, D.C.
Filed Mar. 27, 1980, Ser. No. 134,351
Int. Cl.³ B07B *7/086*
U.S. Cl. 209—143 15 Claims

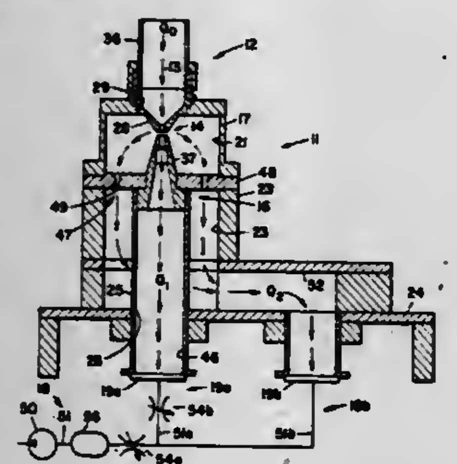

1. A virtual impactor for dividing a particle containing gas flow into a coarse particle flow component carrying particles larger than a predetermined cutpoint size and a fine particle flow component carrying particles of less than said cutpoint size, said virtual impactor having an annular inlet flow tubulation, an annular coarse particle collection probe spaced from said inlet flow tubulation to define a flow separation region therebetween, a housing enclosing said separation region and defining an annular fine particle flow chamber therearound, said inlet flow tubulation and said collection probe and flow chamber being coaxial and aligned along a single linear axis, a coarse particle collector disposed within said probe in symmetrical relationship to said axis, a fine particle collector disposed outside of said flow chamber and at a position offset from said axis, first flow producing means for drawing said coarse particle flow component from said separation region into said collection probe and to said coarse particle collector therein, flow passage means for receiving said fine particle flow from said flow chamber and for transmitting said fine particle flow outwardly away from said axis to said fine particle collector, and second flow producing means for drawing said fine particle flow component outwardly from said separation region into said flow chamber and then to said fine particle collector through said flow passage means, wherein the improvement comprises:

a flow chamber endwall disposed between said flow chamber and said flow passage means in coaxial relationship to said inlet flow tubulation and said probe, said endwall having aperture means for transmitting said fine particle flow component out of said flow chamber and into said flow passage means in a flow pattern which is symmetrical with respect to said axis, said aperture means being sized to impede flow from said chamber into said flow passage means to an extent sufficient to prevent flow pattern asymmetry in said flow passage means from causing a flow pattern asymmetry at said separation region.

4,301,003
PHOSPHATE FLOTATION WITH DIBASIC ACIDS
Shuang-shii Hsieh, Florence, Ala., assignor to Tennessee Valley Authority, Muscle Shoals, Ala.
Continuation of Ser. No. 93,354, Nov. 13, 1979, Pat. No. T100,301. This application Jul. 7, 1980, Ser. No. 165,999
Int. Cl.³ B03D *1/00*
U.S. Cl. 209—166 1 Claim

1. An ore flotation process comprising the steps of
(1) subjecting a phosphate ore containing silica and silicates to froth flotation in the presence of a collector, said collector consisting essentially of C_{36} high molecular weight dibasic acids comprising two carboxylic groups;
(2) recovering the phosphate concentrate from the overflow; and
(3) removing the separated silica and silicates in the underflow.

4,301,004
N-AMINOETHYLPIPERAZINE CONDENSATES FOR BENEFICIATION OF PHOSPHATE ORE
Robert E. Hefner, Jr., Midland, Mich., assignor to The Dow Chemical Company, Midland, Mich.
Filed May 21, 1979, Ser. No. 41,161
Int. Cl.³ B03D *1/02*
U.S. Cl. 209—166 5 Claims

1. In a process for beneficiating a siliceous phosphate ore by froth flotation with a collector system for the flotation of siliceous matter, the improvement wherein the collector system comprises an effective amount of a condensate or an acid salt of a condensate of a tall oil fatty acid or tall oil fatty acid ester with (1) a polyethylenepolyamine corresponding to the formula $H_2N—C_2H_4NH—_xC_2H_4—NH_2$, wherein x is an integer of from 4 to 11 and (2) a N-aminoethylpiperazine, said collector system comprising at least about 5 weight percent N-aminoethylpiperazine.

4,301,005
APPARATUS FOR FILTERING A LIQUID
Otmar P. Schön, Saarbrücken-Scheidt, and Manfred Klauck, Lebach, both of Fed. Rep. of Germany, assignors to Flutec Fluidtechnische Geräte GmbH, Sulzbach, Fed. Rep. of Germany
Filed Jun. 20, 1980, Ser. No. 161,293
Claims priority, application Fed. Rep. of Germany, Jun. 23, 1979, 7918117[U]
Int. Cl.³ B01D *29/02*
U.S. Cl. 210—90 7 Claims

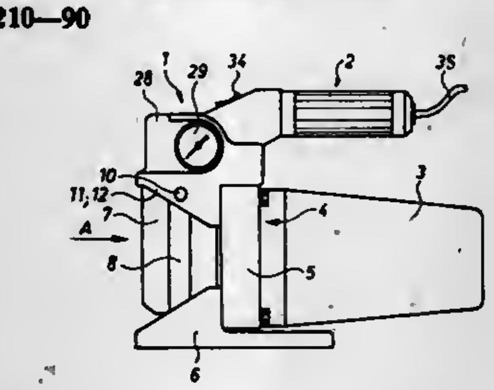

1. An apparatus for filtering a liquid including a pot-shaped filter housing (7) carrying a filter element (9) and a pump (4) driven by a motor (3), the improvement comprising:
a unitary connecting piece (1) having on its front side a suction inlet (15) and a pressure outlet (16), the filter housing (7) and the pump (4) being coupled to the bottom side of said connecting piece (1);
channel means, formed in said connecting piece (1), including a first channel (17, 18, 19) for connecting said suction inlet (15) with the suction side of the pump (4), a second channel (20, 21, 22) for connecting the pressure side of the pump with the filter housing (7) and a third channel (26, 27) for connecting the middle of the filter element with said pressure outlet (16);
said first channel (17, 18, 19) comprising two interconnecting blind bores (17, 18);
said second channel (20, 21, 22) comprising two interconnecting and intersecting blind bores (20, 21);
said third channel (26, 27) comprising two interconnecting and intersecting blind bores (26, 27);
a connecting bore (30) formed in said connecting piece between said first channel on the suction side of the pump (4) and said second channel on the pressure side of the pump (4), said connecting bore (30) having a valve (30') therein opening to the suction side of the pump (4);
means (8, 15'), pivotally coupled to said connecting piece (1), for releasably coupling the filter element (9) and the filter housing (7) to said connecting piece (1);
a carrying handle (2) coupled to the top side of said connecting piece (1), said handle (2) being coupled to an electric cable (35); and
a support leg (6) coupled below said connecting piece (1) and the filter housing (7) to the pump (4).

4. An apparatus according to claim 1, wherein
a manometer is coupled to said connecting piece and to the pressure side of the pump.

4,301,006
SHIP-BORNE OIL DISPERSANT PROCEDURE AND APPARATUS
Murray A. Davis, 2443 Brookhurst Rd., Mississauga, Ontario, Canada (L5J 1R4)
Filed Jun. 4, 1979, Ser. No. 45,333
Int. Cl.³ B01D *21/24*
U.S. Cl. 210—96.1 14 Claims

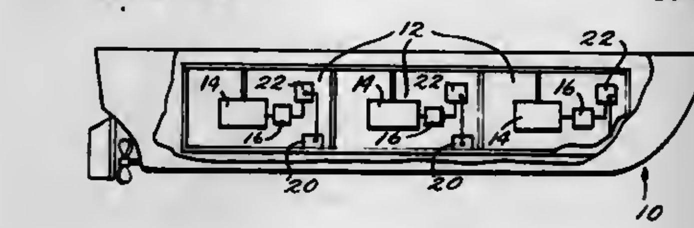

3. An oil disperser system comprising:
(a) means for automatically detecting a leak of oil from an oil tank in a ship into a body of water;
(b) means for holding an oil dispersant; and
(c) means, responsive to said detecting means, for automatically releasing said oil dispersant from said dispersant holding means into said oil so that said oil is dispersed in said body of water;
said ship supporting said holding means and said detecting means; and
said detecting means comprising means for detecting a deformation of the walls of said tank indicative of said leak.

4,301,007
TWO ZONE APPARATUS FOR BIOLOGICAL TREATMENT OF WASTE WATER
Guy Savard, Westmount; Robert G. H. Lee, Montreal, and Derek Hornsey, Roxboro, all of Canada, assignors to Canadian Liquid Air Ltd./Air Liquide Canada Ltee., Montreal, Canada
Division of Ser. No. 92,283, Nov. 8, 1979, which is a continuation-in-part of Ser. No. 905,008, May 11, 1978, Pat. No. 4,192,740, which is a continuation-in-part of Ser. No. 730,478, Oct. 7, 1976, abandoned. This application Sep. 22, 1980, Ser. No. 190,014
The portion of the term of this patent subsequent to Dec. 30, 1997, has been disclaimed.
Int. Cl.³ C02F *3/20*
U.S. Cl. 210—96.1 5 Claims

1. An apparatus for treating waste water containing biodegradeable waste to provide a clarified liquid effluent and a disposable sludge including a single treating enclosure open to the atmosphere for containing waste-degrading microorganisms and through which waste water is continuously passed, and to which oxygen is added to sustain the microorganisms and from which the clarified effluent is continuously overflowed and from which excess sludge and gases are continually removed, in which a lower part of the enclosure constitutes a biological reaction zone for containing mixed liquor containing said microorganisms and in which a biological reaction to degrade the waste is conducted, an upper part of the enclosure constitutes a clarification zone in which clarified liquid rises and overflows, and there is between the reaction and clarification zones a transition zone in which the liquid of the mixed liquor rises and the solids settle,
an oxygen-dissolving device disposed outside the reaction zone,
means for continuously withdrawing a recycle stream of mixed liquor from the reaction zone and conducting the stream through said oxygen-dissolving device,
means for continuously adding influent waste water into the recycle stream at a variable rate within a range related to the depth and surface area of the enclosure to provide a residence time within the reaction zone effective for the biodegradation of the waste and for the formation and settling of biological floc,
means including a source of oxygen for continuously adding oxygen to said recycle stream at a rate to provide an oxygen concentration within a controlled range below the saturation level of oxygen in the liquid effective to meet the oxygen demand of the organisms and to maintain it in contact with the liquid in a contact zone of said stream for a time and under a pressure such that the oxygen is dissolved in the liquid, and means for passing the thusly supplemented stream into a lower part of the reaction zone of the enclosure remote from the vicinity of withdrawal,
means for continuously controlling the overall flow rate of said recycle stream to a substantially constant rate several times that of the incoming waste water effective to provide for dissolving the oxygen which is added to the recycle stream,

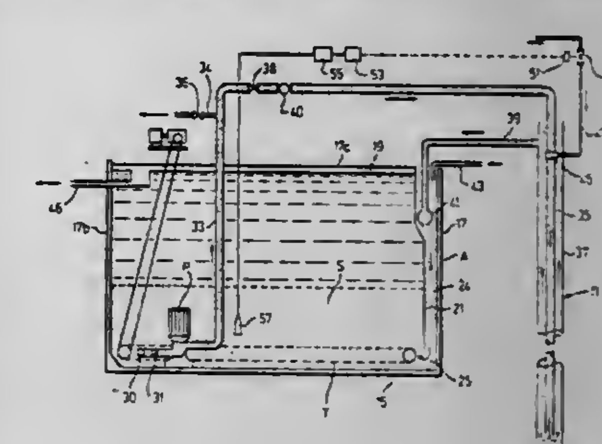

and an amount of dilution of the recycle stream entering the reaction zone effective to prevent the oxygen coming out of solution at an upper part of the reaction zone,
means for continuously distributing the flow of said recycle stream entering the reaction zone to reach a substantial area of a lower part thereof to provide a wide spread direct flow through the reaction zone, from the vicinity of injection to the vicinity of withdrawal, whereby there is controlled agitation effective to keep the solids dispersed, and good access of the organisms to the biodegradeable waste, and to provide at an intermediate level of the enclosure, an upward velocity of the mixed liquor less than the settling rate of the solids, whereby there is maintained in the enclosure separate reaction and clarification zones intervened by said transition zone,
means for continuously monitoring the concentration of dissolved oxygen in the reaction zone to determine variations thereof resulting from variations in the flow rate and concentration therein of waste including a probe located within said reaction zone,
means including a dissolved oxygen analyzer and controller responsive to the probe, for periodically adjusting the rate of addition of the oxygen to the recycle stream in response to variations in the oxygen concentration in the reaction zone to maintain said concentration within said controlled range and at a level where there is substantially avoided effervescence that would lead to gas bubbles rising into the clarification zone,

means for continuously withdrawing said effluent from the clarification zone to keep pace with the influent waste water,
means for continually removing excess sludge from the reaction zone and carbon dioxide from the mixed liquor,
and means for directing the supplemented recycle stream in the form of a horizontal shallow inflow having a width substantially greater than its depth, and means for withdrawing mixed liquor from near the bottom of the reaction zone at a vicinity remote from the inflow in an outflow having a substantially greater width than its depth thereby to provide between the inflow and the outflow a horizontally flowing undercurrent having an extensive uninterrupted interface with an overlying relatively quiescent upwardly flowing body of mixed liquor.

4,301,008
SKIMMER FOR REMOVING THE SURFACE LAYER FROM A STRETCH OF LIQUID
Alain Baffert, Grenoble; Michel Fauconnet, Saint Egreve; Christian Gales, Domene, and Claude Roig, Grenoble, all of France, assignors to Alsthom-Atlantique, Paris, France
Filed Mar. 26, 1980, Ser. No. 134,002
Claims priority, application France, Mar. 30, 1979, 79 08037
Int. Cl.³ E02B *15/04*
U.S. Cl. 210—242.3 **1 Claim**

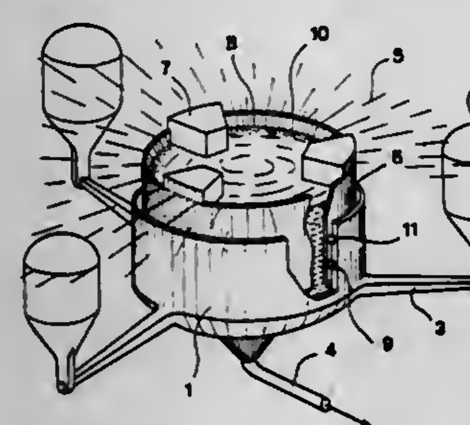

1. A skimmer for removing the surface layer from a stretch of liquid, said skimmer comprising an upwardly open cylindrical skim vat member with a surface layer open ended cylindrical spillway member floating thereabove, said spillway member and said vat member being slidably nested one within the other, at least one sliding seal (9) fast with one of said members and slidable over the surface of the other member and defining a seal between said nested members, and wherein said sliding seal comprises an O-ring seal.

4,301,009
WATER FILTER
Don E. Cook, and Dorothy M. Cook, both of 2508 Church St., Greenville, Tex. 75401
Filed Feb. 29, 1980, Ser. No. 125,984
Int. Cl.³ B01D *23/14*
U.S. Cl. 210—278 **32 Claims**

1. A water filter, comprising:
an elongate, closed housing;
a baffle plate secured transversely within said housing and separating the interior of said housing into a first smaller chamber and a second larger chamber, said baffle plate having a plurality of passages extending therethrough;
an inlet line passing through said housing into said first chamber for receiving water provided to the water filter;
a return line passing through said housing into said first chamber, through said baffle plate and extending into said second chamber;
a lateral line connected to the end of said return line within said second chamber, said lateral line having a plurality of openings for passing water therethrough;
a filtering medium substantially filling said second chamber; and

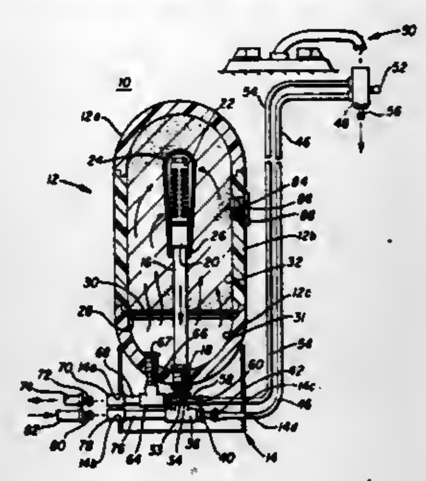

a cylindrical base connected to a lower end of said housing for supporting said housing in an upstanding position, said return line and said inlet line passing through the wall of said base and entering said housing from within said base.

4,301,010
VACUUM FILTER
Roy T. Eddleman, Beverly Hills, and Gregory F. Moran, Monrovia, both of Calif., assignors to Spectrum Medical Industries, Inc., Los Angeles, Calif.
Filed Mar. 10, 1980, Ser. No. 128,937
Int. Cl.³ B01D *29/00*
U.S. Cl. 210—406 **4 Claims**

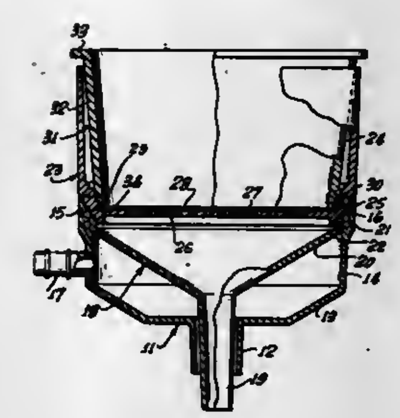

1. A vacuum filter funnel useful for separating solids from liquids, said funnel comprising:
a vacuum intake member having a bottom outlet, said bottom outlet being shaped to form an airtight seal with a filtrate container, said vacuum intake member having a bottom wall extending outwardly and upwardly from said bottom outlet to a sidewall portion which terminates in an upper rim having means to form an airtight seal with an upper funnel member, said vacuum intake member having a vacuum inlet positioned in the side thereof between the upper rim and the bottom outlet thereof;
an upper funnel member affixed at its lower end to the upper rim of the vacuum intake member in an airtight manner for holding the solids and liquid to be separated, said upper funnel member having a perforated bottom having a circular ring with an upper surface adjacent the inner wall thereof, said upper funnel member being generally frustro-conical, said upper funnel member having internal threads positioned above said circular ring;
a threaded sleeve member threadingly held within said upper funnel member by external threads which mate with the internal threads of said upper funnel member, said sleeve member also being generally frustro-conical and terminating at its lower end with a circular ring which abuts the circular ring of the perforated bottom of the upper funnel member; and

a funnel positioned below said perforated bottom of the upper funnel member and forming a liquid-tight seal therewith at the upper end of the funnel, said funnel having a lower exit portion which extends through the bottom outlet of the vacuum intake member.

4,301,011
WATER STRAINER
Johann A. Stamm, Export; James C. Sarver, Jr., Trafford, and Ronald N. Koch, Allison Park, all of Pa., assignors to Rockwell International Corporation, Pittsburgh, Pa.
Filed Jun. 20, 1980, Ser. No. 161,249
Int. Cl.³ B01D *29/00*
U.S. Cl. 210—447 **9 Claims**

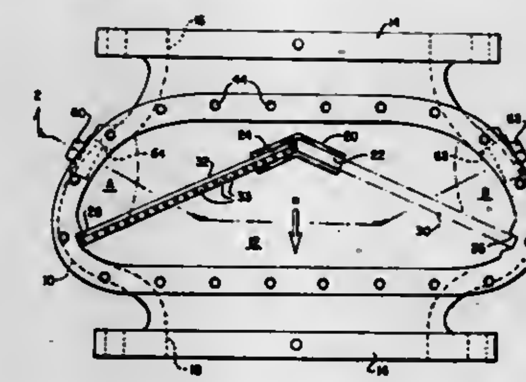

1. A strainer for removing foreign matter from fluid flowing through a pipeline comprising; a body member enclosing a chamber, said body member including a bottom wall and side walls and being open opposite said bottom wall, inlet and outlet passages communicating with said chamber, removable grid means within said chamber spanning said inlet passage comprised of two angularly disposed panels which converge to form an apex at a point proximte to said inlet, a recess formed in the bottom wall into which is received the bottom portion of said grid means proximate to said inlet, a cover removably secured to said body to close the opening opposite said bottom wall, a recess formed on the inside of said cover into which is received the upper portion of said grid which is proximate to said inlet, whereby the portion of said grid means which is proximate said inlet is supported between said bottom wall and said cover when said cover is secured on said body to close said opening.

4,301,012
WELDED STAINLESS STEEL MESH CLEANABLE FILTER
Donald M. Puckett, Thousand Oaks, Calif., assignor to Purolator Technologies, Inc., Newbury Park, Calif.
Filed Apr. 25, 1979, Ser. No. 33,031
Int. Cl.³ B01D *27/06*
U.S. Cl. 210—457 **9 Claims**

1. A filter for filtering a fluid comprising:
a center tube having an axially extending flow passage and radial ports providing communication between the flow passage and the exterior of the center tube;
a porous metal filter pack arranged in a generally tubular configuration adjacent said center tube, one of said center tube and said filter pack being within the other of said center tube and said filter pack;
means for attaching the filter pack to the center tube;
said filter pack having a plurality of pleats extending along the center tube, each of said pleats having first and second opposite ends, said ends being spaced axially;
a metal-to-metal bond for sealing said first ends and said second ends of said pleats closed; and
said first ends of said pleats being spaced from each other and said second ends of said pleats being spaced from each other with such spaces being uncovered axially of the filter pack whereby entrapment of debris in such spaces is reduced and

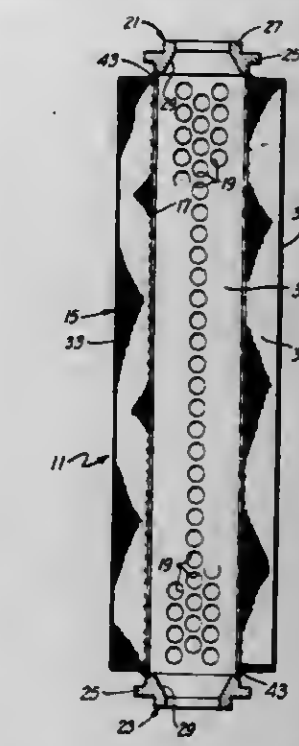

the fluid to be filtered can flow through the filter pack, the radial ports and the flow passage.

4,301,013
SPIRAL MEMBRANE MODULE WITH CONTROLLED BY-PASS SEAL
Duilio Setti, Lexington, Mass., and Peter M. Balbo, Londonderry, N.H., assignors to Abcor, Inc., Wilmington, Mass.
Filed Sep. 11, 1980, Ser. No. 186,337
Int. Cl.³ B01D *31/00, 13/00*
U.S. Cl. 210—637 **24 Claims**

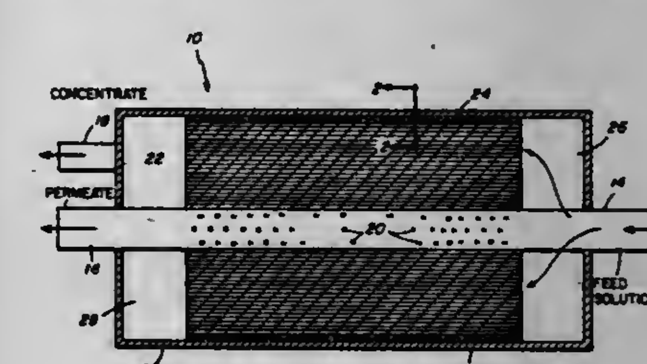

19. A method of controlling the amount of feed-stream by-pass in a spiral-membrane module, wherein the apparatus comprises:
(a) a housing adapted to contain a spiral-membrane module, the housing having an interior wall surface;
(b) a spiral-membrane module positioned within the housing, to define a generally annular clearance space between the exterior surface of the spiral-membrane module and the interior wall surface of the housing, the spiral-membrane module designed to separate a feed stream into a permeate stream and a concentrate stream;
(c) means to introduce a feed stream axially of the spiral-membrane module;
(d) means to withdraw a concentrate stream; and
(e) means to withdraw a permeate stream, the improvement which comprises; axially flowing a controlled by-pass amount of the feed stream about the exterior surface of the spiral-membrane module and through the annular clearance space in a tortuous flow path through and about an open-mesh-type material in the annular clearance space, to permit a controlled amount of feed stream by-pass to pass

through the annular clearance space and to prevent the accumulation of products from the feed stream in the annular clearance space.

4,301,014
PHOSPHORUS PENTASULFIDE WASTE WATER TREATMENT
Harry E. Buckholtz, Lewiston; Joseph J. Moritz, and Joseph S. Wisnouskas, both of Grand Island, all of N.Y., assignors to Hooker Chemicals & Plastics Corp., Niagara Falls, N.Y.
Filed Jun. 5, 1980, Ser. No. 156,539
Int. Cl.³ C02F *1/52*
U.S. Cl. 210—721 **19 Claims**

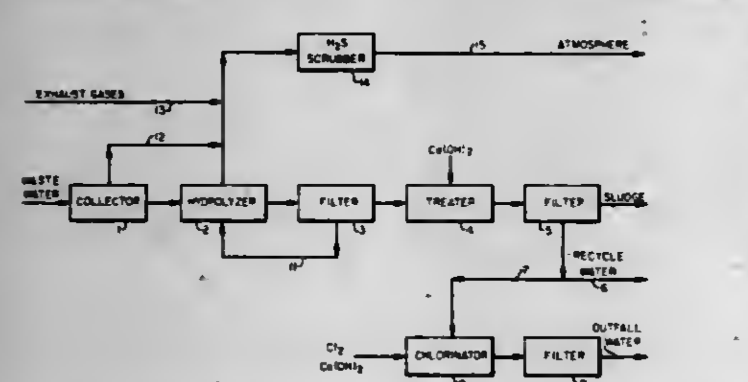

1. A process for the treatment of waste water resulting from the manufacture, use or storage of phosphorus pentasulfide comprising:
a. collecting the waste water,
b. hydrolyzing the P_4S_{10} to phosphates, sulfides, sulfites and sulfates,
c. filtering the hydrolysis mixture to remove any unreacted P_4S_{10}, returning the insolubles for further hydrolysis,
d. treating the soluble portion of the hydrolysis step with a solution of cation that will react with the soluble phosphate anion to precipitate,
e. removing the precipitate from the mixture,
f. oxidizing the filtrate, adjusting the pH, filtering to remove any solids to allow discharge to the environment.
g. passing the gaseous output of the hydrolysis step b. into a catalytic scrubber to remove the sulfur, and
h. venting the gaseous output from the scrubber to the atmosphere.

4,301,015
FILTRATION
Derek A. Parsons, Cheltenham, and James W. Clarke, Brockworth, both of England, assignors to Coal Industry (Patents) Limited, London, England
Continuation of Ser. No. 76,852, Sep. 19, 1980, abandoned. This application Dec. 15, 1980, Ser. No. 216,638
Claims priority, application United Kingdom, Oct. 3, 1978, 39100/78; Jul. 6, 1979, 23629/79
Int. Cl.³ B01D *37/02*
U.S. Cl. 210—777 **8 Claims**
1. An improved method of filtering coal extract resulting from the extraction of coal with a liquid solvent, including the use of a filter aid, wherein the improvement comprises using as the filter aid the product of high temperature processing of filter coke from the coal extraction process to yield an effective

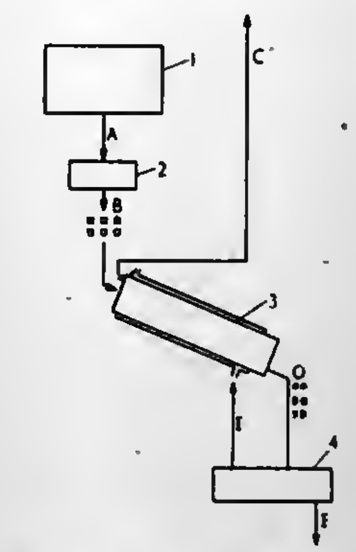

filter aid, under conditions at which the ash component of the cake does not fuse and volatiles are removed therefrom.

4,301,016
BOREHOLE DRILLING FLUID AND METHOD
David B. Carriere, Greeley, Colo., and Rodrigue V. Lauzon, Seabrook, Tex., assignors to NL Industries, Inc., New York, N.Y.
Filed Feb. 2, 1979, Ser. No. 8,758
Int. Cl.³ C09K *7/02*
U.S. Cl. 252—8.5 C **19 Claims**
1. In a method for drilling a borehole wherein a drilling fluid is circulated within said borehole while drilling, the improvement comprising circulating in said borehole an aqueous composition comprising an effective amount of an emulsion polymerized polymer in water latex consisting of (1) an interpolymer of an olefinically unsaturated carboxylic acid monomer selected from the group consisting of acrylic acid, methacrylic acid and mixtures thereof and at least one other non-carboxylated polymerizable monomer having the general formula:

$$CH_2{=}\overset{\displaystyle R_2}{\overset{|}{C}}{-}\overset{\displaystyle O}{\overset{\|}{C}}{-}O{-}R_1$$

wherein R_1 is a member of the class consisting of alkyl groups having from 1 to 30 carbon atoms and R_2 is hydrogen or a methyl group, said interpolymer having a molecular weight of from about 1,000,000 to about 4,000,000, and (2) water the API apparent viscosity of an aqueous dispersion of said latex containing 0.5 lbs. of polymer solids per barrel of said dispersion in a pH range above about 6 being at least 600% greater than the API apparent viscosity of said mixture in a pH range below about 6, the pH of said aqueous composition being above about 7, said latex serving to viscosify said drilling fluid without the addition of a clay viscosifier.

4,301,017
STABLE, LIQUID STARCH GRAFT COPOLYMER COMPOSITION
Adrian P. Kightlinger; Edwin L. Speakman, and Grant T. Van Duzee, all of Clinton, Iowa, assignors to Standard Brands Incorporated, New York, N.Y.
Filed Apr. 28, 1980, Ser. No. 144,009
Int. Cl.³ D06M *15/22*
U.S. Cl. 252—8.6 **30 Claims**
30. A sizing composition comprised of a stable, aqueous polymeric dispersion comprised of at least 25% by weight of a starch graft copolymer of at least one vinyl monomer and a

derivatized and thinned starch with a degree of substitution of at last about 0.05 and an intrinsic viscosity of not less than

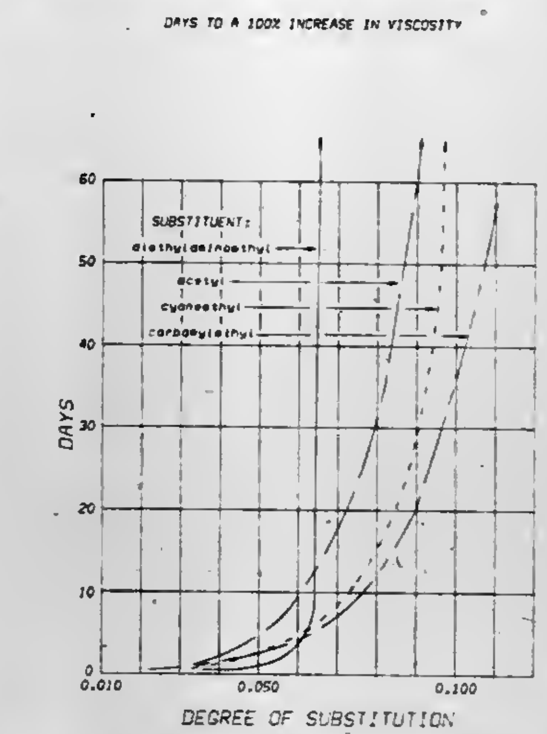

about 0.12 dl/g wherein the starch/monomer ratio of said starch graft copolymer is less than about 100/25.

4,301,018
USE OF CYCLIC CHEMICAL COMPOUNDS FOR AUGMENTING OR ENHANCING THE AROMA OF FABRIC SOFTENER ARTICLES
Mark A. Sprecker, Sea Bright; Frederick L. Schmitt, Holmdel; Manfred H. Vock, Locust; Joaquin F. Vinals, Red Bank, all of N.J., and Jacob Kiwala, Brooklyn, N.Y., assignors to International Flavors & Fragrances Inc., New York, N.Y.
Division of Ser. No. 46,361, Jun. 7, 1979, Pat. No. 4,263,139, which is a division of Ser. No. 953,128, Oct. 20, 1978, Pat. No. 4,195,099. This application Jan. 18, 1980, Ser. No. 113,348
Int. Cl.³ D06M *13/16, 13/18*
U.S. Cl. 252—8.6 **9 Claims**
1. A fabric softener article comprising a non-woven cloth substrate and a substrate coating intimately admixed with a cyclic chemical compound having the structure:

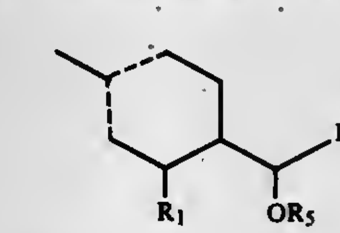

wherein R_1 is selected from the group consisting of hydrogen and methyl; R_2 is C_3–C_5 alkyl or alkenyl; and R_5 is hydrogen or C_1–C_4 acyl and wherein one of the dashed lines is a carbon-carbon single bond and the other of the dashed lines is a carbon-carbon double bond.

4,301,019
MERCAPTOTHIADIAZOLE ADDUCTS OF UNSATURATED ESTERS AND LUBRICANTS CONTAINING SAME
Andrew G. Horodysky, Cherry Hill, and Phillip S. Landis, Woodbury, both of N.J., assignors to Mobil Oil Corporation, New York, N.Y.
Filed Oct. 29, 1980, Ser. No. 201,885
Int. Cl.³ C10M *1/10*
U.S. Cl. 252—49.6 **26 Claims**
1. A product of reaction obtained by reacting at a temperature of from about 140° C. to about 200° C. a hydroxyl-containing unsaturated ester or a borated derivative thereof with a mercaptothiadiazole.
12. A lubricant composition containing a major amount of a lubricant selected from the group consisting of oils of lubricating viscosity and greases thereof and a friction reducing amount of a product of reaction obtained by reacting a hydroxyl-containing unsaturated ester or a borated derivation thereof with a mercaptothiadiazole said reaction obtained at a temperature of from about 140° C. to about 200° C.
17. The composition of claim 12 wherein said product is prepared by reacting glycerol monooleate with 2,5-dimercapto-1,3,4-thiadiazole.
18. The composition of claim 12 wherein said product is prepared by reacting borated glycerol monooleate with 2,5-dimercapto-1,3,4-thiadiazole.

4,301,020
PROCESS OF SLURRYING AND SPRAY DRYING CERAMIC OXIDES WITH POLYETHYLENEIMINE DISPERSANTS
David W. Johnson, Jr., Pluckemin, and Eva M. Vogel, Berkeley Heights, both of N.J., assignors to Bell Telephone Laboratories, Incorporated, Murray Hill, N.J.
Division of Ser. No. 929,930, Aug. 1, 1978, Pat. No. 4,267,065. This application Feb. 6, 1981, Ser. No. 232,204
Int. Cl.³ C04B *35/38*
U.S. Cl. 252—62.62 **6 Claims**
1. A method of processing ceramics which comprises forming a slurry consisting of ceramic material and a dispersant; said ceramic material forming between 65 percent and 80 percent, by weight, of said material and being a mixture of metal oxides, and spray drying said slurry;
characterized in that said dispersant consists essentially of at least one member selected from the group consisting of polyethylenimine and mixtures of polyethylenimine and ammonium citrate.

4,301,021
N,N-DIETHYL-2-ETHYLHEXANAMIDE FRAGRANCES
Claude Breant, Villeurbanne, France, assignor to Rhone-Poulenc Industries, Paris, France
Filed Apr. 2, 1980, Ser. No. 136,545
Claims priority, application France, Apr. 2, 1979, 79 08693
Int. Cl.³ A61K *7/46;* **C11B** *9/00;* **C11D** *3/32, 3/50*
U.S. Cl. 252—98 **16 Claims**
1. In a perfumed composition, the improvement which comprises, as an odorant therefor, an olfactory affecting amount of N,N-diethyl-2-ethylhexanamide (DEH).
6. The perfumed composition as defined by claim 1, comprising a detergent or soap.
11. The perfumed composition as defined by claim 6, further comprising at least one member selected from the group consisting of a surfactant, a bleaching agent, an optical bluing or whitening agent, a filler and an anti-redeposition agent.

4,301,022
PROCESS FOR AUGMENTING OR ENHANCING THE AROMA OF A DETERGENT USING 2,4,6-TRIMETHYLCYCLOHEXANEMETHANOL AND DERIVATIVES
Mark A. Sprecker, Sea Bright; Frederick L. Schmitt, Holmdel; Manfred H. Vock, Locust; Joaquin F. Vinals, Red Bank, all of N.J., and Jacob Kiwala, Brooklyn, N.Y., assignors to International Flavors & Fragrances Inc., New York, N.Y.
Division of Ser. No. 82,076, Oct. 5, 1979, which is a continuation-in-part of Ser. No. 953,128, Oct. 20, 1978, Pat. No. 4,195,099. This application Oct. 9, 1980, Ser. No. 195,530
Int. Cl.³ C11D *3/50, 9/44*
U.S. Cl. 252—174.11 **5 Claims**
1. A process for augmenting or enhancing the aroma of a

solid or liquid anionic, cationic, nonionic or zwitterionic detergent comprising the step of adding to a solid or liquid anionic, cationic, nonionic or zwitterionic detergent base from 0.01% up to 0.5% of at least one compound defined according to the structure:

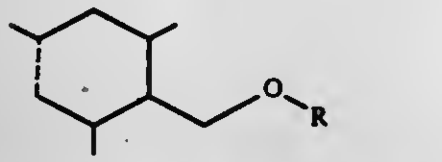

wherein the dashed line represents a carbon-carbon single bond or a carbon-carbon double bond and R is hydrogen or acetyl.

4,301,023

CHOLESTERIC COMPOSITIONS

Winfried Schuberth, West Carrollton, Ohio, and John F. Hanny, Racine, Wis., assignors to American Thermometer Co., Inc., Dayton, Ohio

Filed Jun. 23, 1980, Ser. No. 161,789

Int. Cl.[3] C09K *3/34*

U.S. Cl. 252—299.7 **1 Claim**

1. A single-color composition of shear-sensitive liquid crystal compounds consisting essentially of:

25–34% cholesteryl nonanoate,

25–34% cholesteryl chloride and

32–50% cholesteryl isostearyl carbonate

suspended in an oleaginous carrier or an aqueous emulsion, said composition producing a variety of colors when subjected to shearing on the surface of an inert substrate, while maintaining the same color over a wide temperature range.

4,301,024

USE OF CYCLIC CHEMICAL COMPOUNDS FOR AUGMENTING OR ENHANCING THE AROMA OF OPTICAL BRIGHTENER COMPOSITION

Mark A. Sprecker, Sea Bright; Frederick L. Schmitt, Holmdel; Manfred H. Vock, Locust; Joaquin F. Vinals, Red Bank, all of N.J., and Jacob Kiwala, Brooklyn, N.Y., assignors to International Flavors & Fragrances Inc., New York, N.Y.

Division of Ser. No. 46,361, Jun. 7, 1979, Pat. No. 4,263,149, which is a division of Ser. No. 953,128, Oct. 20, 1978, Pat. No. 4,195,099. This application Jan. 18, 1980, Ser. No. 113,290

Int. Cl.[3] C09K *11/00*

U.S. Cl. 252—301.31 **10 Claims**

1. A process for augmenting or enhancing the aroma of an optical brightener composition comprising the step of placing in intimate contact with an optical brightener base at least one cyclic chemical compound having the structure:

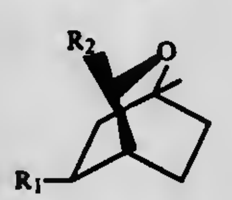

wherein R_1 is selected from the group consisting of hydrogen and methyl and R_2 is C_3–C_5 alkyl or alkenyl.

4,301,025

DERIVATIVES OF POLYPHOSPHORIC ACID PARTIAL ESTERS

Thomas P. Brady, Holliston, and Horst G. Langer, Wayland, both of Mass., assignors to The Dow Chemical Company, Midland, Mich.

Filed Feb. 6, 1980, Ser. No. 119,064

Int. Cl.[3] C23F *11/16*

U.S. Cl. 252—389 A **4 Claims**

1. A composition of matter consisting essentially a compound of the formula

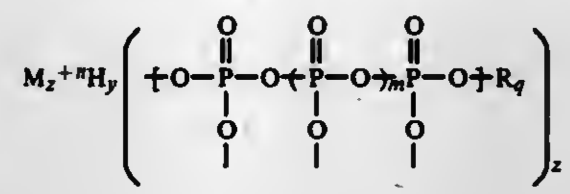

wherein

R is each occurrence a remnant formed by removal of a hydroxy from a monohydroxyl compound selected from:

(a) a (poly)glycol monoether of the formula

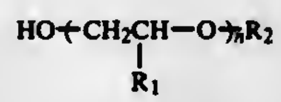

wherein R_1 is hydrogen, methyl or halomethyl; R_2 is C_{1-6} alkyl or haloalkyl, phenyl, halo-phenyl or methylphenyl; and n is an integer from 1 to 4;

(b) a phenol or halophenol; and

(c) a C_{1-20} aliphatic or halogenated

aliphatic monohydroxyl compound; provided that in at least one occurrence R is a remnant of (a);

M is independently each occurrence an ammonium or substituted ammonium ion or a metal ion having valence n;

m is an integer from zero to three; y is an integer equal to or greater than zero; and q' x and z are all integers greater than or equal to one selected such that $(z \cdot n)+y=x(m=4=q)$ and $q \leq m+3$ and no more than 10 percent by weight of monophosphate esters or partial esters.

4,301,026

ANTIOXIDANT FOR CARBONACEOUS MATERIAL AND METHOD

Teruhisa Kondo, No. 28-8, Higashitoyonaka-cho, 1-chome, Toyonaka-shi, Osaka-fu; Jiro Ishiguro, Takesato-danchi 2-4-308, No. 89, Ooeda, Ooaza, Kasukabe-shi, Saitama-ken, and Nobuatsu Watanabe, No. 136, Uguisu-dai, Nagaokakyo-shi, Kyoto-fu, all of Japan

Filed Apr. 6, 1979, Ser. No. 28,027

Int. Cl.[3] C09K *15/32*

U.S. Cl. 252—400 R **5 Claims**

1. An antioxidant for a carbonaceous material such as graphite or carbon which comprises at least one metal salt of a boric acid ester of a member selected from the group consisting of sorbitol, mannitol, sucrose, maltose, lactose and combinations thereof, said boric acid ester containing boric acid values in an amount of about 0.5 to 2.0 moles per mole of said member selected from the group consisting of sorbitol, mannitol, sucrose, maltose, lactose and combinations thereof, said metal being a member selected from the group consisting of magnesium, calcium, zinc and barium and being contained in an amount of about 1 to 3 atomic moles per mole of said boric acid ester.

4,301,027

SILICA GELS INCORPORATING INSOLUBILIZED REAGENTS

Alfred Blümcke; Peter Fischer, both of Rheinfelden, and Hans-Joachim Vahlensieck, Wehr, all of Fed. Rep. of Germany, assignors to Dynamit Nobel AG, Troisdorf, Fed. Rep. of Germany

Filed Jul. 3, 1979, Ser. No. 54,518

Claims priority, application Fed. Rep. of Germany, Jul. 3, 1978, 2829091

Int. Cl.[3] C09K *3/00;* **G01N** *21/06, 31/22, 21/08*

U.S. Cl. 252—408 **11 Claims**

1. A process for preparing a dried silica gel containing insolubilized reactive form a reagent which is normally soluble which comprises hydrolyzing a silane having from 1 to 4 alkoxy groups in homogeneous phase in the presence of a soluble reagent, recovering the resultant silica gel and drying the same.

11. A composition consisting essentially of dried silica gel containing in insolubilized form a normally soluble reagent which retains its reactivity, said reagent in said silica gel being insoluble to solvents in which it is normally soluble prepared by the process of claim 1 employing as the silane a silane having 4 alkoxy groups.

4,301,028

CONTROL REAGENT FOR HEPARIN ACTIVITY DETERMINATION

Knut Bartl, Tutzing; Joachim Ziegenhorn, Starnberg; Peter Wunderwald, Haunshofen; Klaus Beaucamp, Tutzing, and Helmut Lill, Wielenbach, all of Fed. Rep. of Germany, assignors to Boehringer Mannheim GmbH, Mannheim-Waldhof, Fed. Rep. of Germany

Filed Jan. 9, 1980, Ser. No. 110,581

Claims priority, application Fed. Rep. of Germany, Jan. 31, 1979, 2903701

Int. Cl.[3] G01N *33/16;* **C09K** *3/00*

U.S. Cl. 252—408 **4 Claims**

1. A control reagent for heparin activity determination comprising

20 to 1500 USP heparin,

2000 to 30000 IU antithrombin III,

0.15 to 1.5 to millimoles serum albumin,

0.005 to 0.05 mole ethylenediaminetetraacetic acid sodium salt,

0 to 0.4 mole saccharose,

2000 to 20000 U aprotinin, and

buffer substance, pH 6.5 to 7.5,

per liter of control reagent solution.

4,301,029

OLEFIN POLYMERIZATION CATALYST AND THE PRODUCTION AND USE THEREOF

Anthony D. Caunt, Welwyn Garden City, and Paul D. Gavens, Lower Stondon, both of England, assignors to Imperial Chemical Industries Limited, London, England

Continuation-in-part of Ser. No. 24,081, Mar. 26, 1979, abandoned. This application Jan. 10, 1980, Ser. No. 111,184

Claims priority, application United Kingdom, Jan. 10, 1979, 942/79; Nov. 5, 1979, 38176/79

Int. Cl.[3] C08F *4/64*

U.S. Cl. 252—429 B **14 Claims**

1. A process for the production of a composition suitable for use as a component of an olefine polymerisation catalyst, which process comprises treating a component I which is at least one solid inorganic oxide with a component II which is a magnesium hydrocarbyl compound, or a complex or mixture of a magnesium hydrocarbyl compound and an aluminium hydrocarbyl compound, a component III which is at least one halogenating agent, a component IV which is a Lewis Base compound and a component V which is titanium tetrachloride, wherein

(A) component I is reacted with either component II or component III;

(B) the product from stage (A) is reacted with whichever of component II or component III is not used in stage (A);

(C) the product of stage (B) is reacted with either component IV or component V; and

(D) the product of stage (C) is reacted with whichever of component IV or component V is not used in stage (C);

and stages (B) and (C) can be effected simultaneously using components III and IV.

4,301,030

BI-CONTAINING METHACROLEIN OXIDATION CATALYSTS

Wilfrid G. Shaw, Lyndhurst; James E. Rinz, Bedford, and Christos Paparizos, Willowick, all of Ohio, assignors to The Standard Oil Company, Cleveland, Ohio

Filed Aug. 5, 1980, Ser. No. 175,235

Int. Cl.[3] B01J *27/14*

U.S. Cl. 252—435 **10 Claims**

1. A catalytic composition of the empirical formula:

$$Mo_{12}P_{0.1-3}Bi_{0.1-2}M_{0.1-3}Cu_{0.1-2}V_{0.1-3}X_aY_bO_c \quad \text{(I)}$$

wherein

M is at least one of K, Rb and Cs;

X is at least one of Ba, Zn, Ga, Cd and Ti;

Y is at least one of Ca, Mg, Ta, Zr, Ce, Ni, Co, Fe and Tl when $b>0$;

a is a number greater than 0;

b is a number of 0 to about 2; and

c is a number that satisfies the valence requirements of the other elements present.

4,301,031

METHACROLEIN OXIDATION CATALYSTS

Wilfrid G. Shaw, Lyndhurst; Philip L. Kuch, Aurora, and Christos Paparizos, Willowick, all of, OH, assignors to The Standard Oil Company, Cleveland, Ohio

Filed Aug. 5, 1980, Ser. No. 175,236

Int. Cl.[3] B01J *27/14*

U.S. Cl. 252—435 **14 Claims**

1. A catalytic composition of the empirical formula:

$$Mo_{12}P_{0.1-3}M_{0.1-3}Cu_{0.1-2}V_{0.1-2}X_{0.01-2}Y_aO_b \quad \text{(I)}$$

where

M is at least one of K, Rb and Cs;

X is at least one of Ba, La, Ga, Al, Ag, Cd, Ti, Tl, Hg, Pb and Zn;

Y is at least one of Fe, Co, Ni, Sr, Mn, In, Ta, Ge, S and Be when a≥220;

a is a number of 0 to about 2; and

b is a number that satisfies the valence requirements of the other elements present

---

4,301,032

THORIUM OXIDE-CONTAINING CATALYST AND METHOD OF PREPARING SAME

Gary B. Atkinson, Reno; Larry J. Nicks, Fernley, and Donald J. Bauer, Reno, all of Nev., assignors to The United States of America as represented by the Secretary of the Interior, Washington, D.C.

Filed May 21, 1980, Ser. No. 152,211

Int. Cl.³ B01J *23/12, 23/74*

U.S. Cl. 252—443 14 Claims

1. A method of producing a thorium oxide-containing catalyst comprising:

providing an alloy of thorium metal and at least one metal from the group consisting of nickel, cobalt and iron;

oxidizing said alloy in an oxidizing atmosphere to oxidize said metals; and

treating the oxidized material in a reducing atmosphere to reduce oxides of nickel, cobalt or iron to free metal to produce a catalyst containing thorium oxide and at least one metal from the group consisting of nickel, cobalt and iron.

4,301,033

HIGH APPARENT BULK DENSITY GAMMA ALUMINA CARRIER AND METHOD OF MANUFACTURE OF SAME

Shizuo Takumi, Kamakura; Toshio Hashimoto, Isehara, and Fumio Akimoto, Hiratsuka, all of Japan, assignors to Nikki-Universal Co., Ltd., Tokyo, Japan

Filed Oct. 22, 1979, Ser. No. 87,267

Claims priority, application Japan, Nov. 6, 1978, 53-136513

Int. Cl.³ B01J *37/00, 35/08;* **C01F** *7/22, 7/02*

U.S. Cl. 252—448 4 Claims

1. A method of manufacturing a catalyst carrier consisting essentially of substantially spherical gamma alumina particles having an apparent bulk density in the range of from 0.65 g/cc to 0.71 g/cc, a total pore volume measured by the nitrogen adsorption method in the range of from 0.55 cc/g to 0.65 cc/g, a content of pores having a diameter in the range of from 60 Angstroms to 110 Angstroms of at least 75% of the total pore volume, a surface area measured by the nitrogen adsorption method in the range of from 210 m^2/g to 250 m^2/g, and an attrition loss of less than 0.5 wt.%, which comprises the steps of

(a) preparing a first alumina hydrosol having an aluminum concentration in the range of from 9.8 wt.% to 14.4 wt.% and a weight ratio of aluminum to chloride in the range of from 0.95 to 1.20,

(b) then adding hydrochloric acid to said first aluminum hydrosol in proportions effective to form a second alumina hydrosol having an aluminum concentration in the range of from 9.5 wt.% to 13.0 wt.% and a weight ratio of aluminum to chloride in the range of from 0.85 to 0.95,

(c) then commingling said second alumina hydrosol with a gelling agent which is hydrolyzable at an elevated temperature wherein the amount of said gelling agent is from 1.65 to 1.85 times the chemical equivalent necessary to neutralize the chloride contained in said second alumina hydrosol and thereby obtaining a mixture having an aluminum concentration in the range of from 6.0 wt.% to 7.0 wt.%, and

(d) then dispersing said mixture as droplets in a suspending medium under conditions effective to transform said droplets into hydrogel particles, ageing said hydrogel particles in said suspending medium and then in aqueous ammonia, then washing said hydrogel particles with water, then drying and then calcining said hydrogel particles to obtain said gamma alumina particles.

2. A method according to claim 1 wherein said first alumina hydrosol is prepared by digesting metallic aluminum in hydrochloric acid.

3. A method according to claim 1 wherein said first alumina hydrosol is prepared by reacting metallic aluminum with a basic aluminum chloride solution having an aluminum concentration in the range of from 7 wt.% to 12 wt.% and a weight ratio of aluminum chloride in the range of from 0.3 to 0.8, said basic aluminum chloride solution being obtaining by reacting gibbsite with hydrochloric acid at an elevated temperature.

4,301,034

SILICA FROM SINGLE PHASE CONTROLLED HYDROLYSIS OF SILICATE ESTER

Max P. McDaniel, Bartlesville, Okla., assignor to Phillips Petroleum Company, Bartlesville, Okla.

Filed May 21, 1980, Ser. No. 151,847

Int. Cl.³ B01J *21/08, 21/06, 23/26*

U.S. Cl. 252—452 49 Claims

1. A method comprising: combining a silicate ester and water under hydrolysis conditions in the presence of a sufficient amount of solvent such that the reaction mixture remains a single phase, after hydrolysis is essentially complete adding more water and maintaining the resulting composition at an elevated temperature to induce particle growth, thereafter adding sufficient acid neutralizing agent to form a gel, and separating water and solvent from the resulting silica.

42. A method of producing a catalyst comprising: combining a silicate ester of the formula $Si(OR)_4$ wherein R is a 3 to 4 carbon atom alkyl group, and water by slowly adding said ester and said water to a solvent-water-sulfuric acid catalyst mixture which mixture contains said solvent in an amount within the range of 0.1 to 10 volume percent based on the total volume of all of the ester ultimately to be added, said solvent being a 3 or 4 carbon atom alcohol, said water and ester being added slowly so that the water and ester are used up in said hydrolysis about as fast as they are added, alcohol progressively formed from the hydrolysis then serving as the solvent as progressively more ester and water are added and progressively more hydrolyzed ester is formed, the total amount of water being about a stoichiometric amount needed to react with the available ester groups, said hydrolysis being carried out at about reflux temperature, after said hydrolysis is complete adding an alcohol soluble titanium compound, thereafter adding additional water and holding at an elevated temperature for 1 to 5 hours to permit particle growth, adding a chromium compound soluble in the reaction mixture and thereafter introducing ammonia to bring about gelation, thereafter aging at reflux temperature for 1 to 2 hours, removing the water and solvent and drying the resulting silica.

4,301,035

CATALYST MASS FOR HETEROGENEOUS CATALYSIS

Roger P. P. Risse, Caluire, France, assignor to Societe Lyonnaise des Applications Catalytiques, Rillieux, France

Filed Apr. 17, 1979, Ser. No. 30,893

Claims priority, application France, Apr. 25, 1978, 78 12878

Int. Cl.³ B01J *21/12;* **F23D** *13/18;* **F24J** *1/04*

U.S. Cl. 252—455 R 9 Claims

1. A catalyst mass for the heterogeneous contact catalyst of reactions, especially the flameless combustion of hydrocarbons, which consists essentially of an iron-free silico-alumina fiber support with proportions of silica and alumina respectively between 40% and 60% by weight and substantially free from impurities, and an iron-free catalyzer consisting essentially of at least one element in elemental form and at least one oxide of an element selected from the groups III, VI, VIIIb, VIIIc and the rare-earth elements of the Periodic Table, the weight ratio of the element, in elemental form, to the support being substantially 0.001 to 0.02 and the weight ratio of the oxide to the support being substantially 0.01 to 0.2, said support having a density between 0.04 and 0.1, a specific surface between 0.5 and 1 m^2/g, and a thermal stability sufficient to preclude modification of the surface and texture upon prolonged exposure to temperatures up to 900° C.

4,301,036

DEHYDRATION CATALYST FOR MAKING ETHYLENIMINE

David L. Childress, Angleton, and William V. Hayes, Clute, both of Tex., assignors to The Dow Chemical Company, Midland, Mich.

Filed Jul. 18, 1980, Ser. No. 170,318

Int. Cl.³ B01J *23/30, 21/08*

U.S. Cl. 252—458 5 Claims

1. The process of preparing a tungsten catalyst suitable for dehydrating an alkanolamine in the vapor phase to produce an alkylenimine by applying a soluble salt of tungsten from a solution thereof to a low surface area support, calcining said salt to tungsten oxide and thereafter applying silica to the catalyst as a promoter thereby improving the life of said tungsten catalyst.

2. The process of claim 1 wherein the catalyst produced contains from about 5 to about 50% WO_3 and from about 1 to about 10% SiO_2.

4. The process of claim 1 wherein the calcining is accomplished by heating in air at a temperature of 500° to 900° C.

4,301,037

EXTRUDED ALUMINA CATALYST SUPPORT HAVING CONTROLLED DISTRIBUTION OF PORE SIZES

Moises G. Sanchez, Severna Park, and Jose E. Herrera, Ellicott City, both of Md., assignors to W. R. Grace & Co., New York, N.Y.

Filed Apr. 1, 1980, Ser. No. 136,222

Int. Cl.³ B01J *21/04, 23/10;* **C01F** *7/02*

U.S. Cl. 252—462 55 Claims

1. A thermally stable, bimodal extrudate consisting essentially of a pure transition alumina suitable for use as a catalyst support having a substantial first micropore volume made of relatively small pores having a pore diameter of less than 500 Angstrom units, a second macropore volume made of relatively large pores with a pore diameter in the range of 1,000 to 10,000 Angstrom units, and with very little intermediate pore volume made of pores with a pore diameter in the range of 500 to 1,000 Angstrom units, said alumina extrudate having

a first micropore volume, as measured by mercury porosimetry, having pore diameters of 500 Angstrom units or less, of about 0.60 to about 0.85 $cm.^3/g.$;

a second macropore volume, as measured by mercury porosimetry having pore diameters in the range of 1,000 to 10,000 Angstrom units, of about 0.10 to less than 0.30 $cm.^3/g.$;

an intermediate pore volume, as measured by mercury porosimetry, having pore diameters in the range of 500 to 1,000 Angstrom units, of less than about 0.05 $cm.^3/g.$;

said micropore volume having a median pore diameter of 90–210 Angstrom units and having a relatively narrow effective pore size distribution about the median pore diameter with a value of greater than 0.55 for the uniformity factor, U, given by the formula

$$U = \frac{D_{50}}{D_{95} - D_5}$$

where

D_{50} is the micropore volume median diameter,

D_{95} is the smallest pore diameter of that fraction of the largest micropores which constitutes 5 percent of the micropore volume, and

D_5 is the largest pore diameter of that fraction of the smallest micropores which constitutes 5 percent of the micropore volume;

the surface area within said micropore volume being greater than 95 percent of the total surface area measured by nitrogen adsorption;

an average crush strength given by the formula

$$ACS > kdD^2L$$

where

ACS is the average crush strength in pounds force,

d is the compacted bulk density of the extrudates in pounds per cubic foot,

D is the average extrudate diameter in inches,

L is the average extrudate length in inches, and

k is a factor with a value of at least 90; and

an attrition loss of less than 7 percent.

4,301,038

CATALYST FOR THE PRODUCTION OF UNSATURATED ALIPHATIC ACIDS

Wilfrid G. Shaw, Lyndhurst, and David B. Terrill, Bedford, both of Ohio, assignors to Standard Oil Company, Cleveland, Ohio

Division of Ser. No. 106,787, Dec. 26, 1979, Pat. No. 4,256,915. This application Jun. 30, 1980, Ser. No. 164,202

Int. Cl.³ B01J *23/02, 23/22, 23/28, 23/36*

U.S. Cl. 252—468 4 Claims

1. An oxidation catalyst having the empirical formula:

$$Mo_aV_bRe_cX_dO_e$$

wherein X is one or more of the elements selected from the group consisting of magnesium, copper and cadmium, and wherein the number of each element present is represented by a–d;

wherein

a is a number from 8–16;

b is a number from 0.5 to 5;

c is a number from 0.01 to 5;

d is a number from 0.01 to 5; and

e is a number that satisfies the valence requirements of the other elements present.

4,301,039

METHOD OF MAKING A METAL CATALYST SUPPORT

William B. Retallick, 1432 Johnny's Way, West Chester, Pa. 19380

Filed Mar. 17, 1980, Ser. No. 130,968

Int. Cl.³ B01J *35/02*

U.S. Cl. 252—477 R 12 Claims

1. A method of making a metal catalyst support, comprising the steps of:

impressing a first pattern of indentations on a moving strip of metal while winding the strip on a rotating receiving means, the indentations being of uniform height so that the spacing between layers is equal to this height, and,

intermittently impressing a second pattern of indentations on a portion of the strip which has not yet been wound on the receiving means, the indentation of the second pattern being of uniform height, whereby different patterns are wound onto successive layers of the catalyst support so that the indentations in successive layers cannot coincide and nest together.

4,301,040
ELECTRICALLY CONDUCTIVE FOAM AND METHOD OF PREPARATION AND USE
George R. Berbeco, West Newton, Mass., assignor to Charleswater Products, Inc., Needham, Mass.
Continuation-in-part of Ser. No. 918,411, Jun. 23, 1978, Pat. No. 4,231,901, which is a continuation-in-part of Ser. No. 824,051, Aug. 12, 1977, Pat. No. 4,150,418. This application Jun. 19, 1980, Ser. No. 161,138
Int. Cl.³ H01B *1/06*
U.S. Cl. 252—511 **13 Claims**

1. A static-dissipating, synthetic, surface-covering sheet material which comprises:
(a) an electrically nonconducting, synthetic sheet laminate material having a hard thermoset resin top surface suitable for use as a surface covering; and
(b) an electrically conductive layer of a polymeric, film-forming, particulate binder material secured to the bottom surface of the synthetic sheet material, the polymeric material containing uniformly dispersed therein a static-reducing amount of electrically conductive particulate material wherein the particulate material comprises from about 2 to 40% by weight of the polymeric binder material, whereby static charges, accumulating on the top surface of the synthetic sheet material, are dissipated through the electrically conductive layer.

4,301,041
METHOD AND SOLUTION FOR CONDUCTIVE COATING FOR USE IN CATHODE RAY TUBES
Ricky H. Shah, Glendale Heights, Ill., assignor to Zenith Radio Corporation, Glenview, Ill.
Filed Oct. 22, 1979, Ser. No. 86,907
Int. Cl.³ H01J *29/02*
U.S. Cl. 252—511 **12 Claims**

1. For use in the manufacture of a color cathode ray tube having a phosphor-bearing imaging faceplate overlaid successively with a lacquer film and an aluminum film, and including a shadow mask charged with a high voltage and held dependent adjacent to said faceplate by a plurality of metallic suspension members extending from said faceplate, an improved, bake-hardenable solution for providing an electrical bridge between said mask and said aluminum film by way of said suspension members to ensure that said aluminum film is charged with said high voltage, said solution comprising a mixture of substantially equal parts of glass frit particles and graphite particles, each consisting of about 14 to 21 weight percent of said solution and in the size range 0.5 to 10 microns, said particles being in suspension in an evaporable solvent consisting of about 42 to 48 weight percent for said lacquer film, said suspension including a thickening agent in an amount sufficient to produce a paintable viscosity for application by brush means, such that upon application of said solution between said suspension members and said aluminum film, said solution penetrates said lacquer film, and when said tube is baked, provides a permanent electrically conductive bridge between said mask and said aluminum film.

4,301,042
RESISTANCE MATERIAL
Alexander H. Boonstra, and Cornelis A. H. A. Mutsaers, both of Eindhoven, Netherlands, assignors to U.S. Philips Corporation, New York, N.Y.
Filed Mar. 5, 1980, Ser. No. 127,348
Claims priority, application Netherlands, Mar. 8, 1979, 7901864
Int. Cl.³ B32B *9/04*
U.S. Cl. 252—521 **9 Claims**

1. A resistance material comprising a bismuth-strontium rhodate compound having a composition defined by the formula $Bi_xSr_{1-x}Rh_{2.5}O_{5\text{-}5.5}$, wherein x is between 0 and $\frac{1}{2}$.

4,301,043
SUBLIMABLE PERFUME COMPOSITIONS
Haruhito Sato; Hiroshi Ichikawa; Hiroshi Hayashi, and Konomu Kurisaki, all of Sodegaura, Japan, assignors to Idemitsu Kosan Company Limited, Tokyo, Japan
Filed Dec. 20, 1977, Ser. No. 862,624
Claims priority, application Japan, Dec. 25, 1976, 51-155651; Dec. 25, 1976, 51-155653; May 21, 1977, 52-58220; May 24, 1977, 52-59359; Jun. 7, 1977, 52-66298; Oct. 17, 1977, 52-123460
Int. Cl.³ A61K *7/46*; C11B *9/00*
U.S. Cl. 252—522 A **2 Claims**

1. A shaped sublimable composition existing in the solid state consisting essentially of from 10 to 25% by weight of adamantane and from 90 to 75% by weight of endo-trimethylenenorbornane, and, in addition, containing at least one perfumery component.

4,301,044
BIODEGRADABLE ZWITTERIONIC SURFACTANT COMPOUNDS
George E. Wentler, Middletown; Joseph McGrady, Cincinnati; Eugene P. Gosselink, Cincinnati, and William A. Cilley, Cincinnati, all of Ohio, assignors to The Procter & Gamble Company, Cincinnati, Ohio
Filed Jan. 22, 1980, Ser. No. 114,184
Int. Cl.³ C11D *3/066, 1/18*; C07C *141/02*
U.S. Cl. 252—545 **19 Claims**

1. A compound of the formula

$$R^1-\overset{\displaystyle R^2}{\overset{|}{\underset{\underset{\displaystyle R^3}{|}}{^+N}}}-$$

wherein R^1 is selected from the group consisting of straight chain, branched chain or cyclic C_1–C_{30} alkyl, hydroxyalkyl, alkenyl and hydroxyalkenyl moieties and alkaryl moieties in which the alkyl group has 6–24 carbon atoms; R^2 and R^3 are each selected from the group consisting of straight chain, branched chain or cyclic C_1–C_{30} alkyl, hydroxyalkyl, alkenyl and hydroxyalkenyl moieties, alkaryl moieties in which the alkyl group has 6–24 carbon atoms, and C_2–C_4 alkylene oxide having from 1 to 5 alkyleneoxy units; R^4 is an alkylene, hydroxyalkylene, alkylene oxide, alkenylene, arylene, or alkarylene group, provided that A is no more than 10 atoms from M; each A is the cationic charge center

$$-O-\overset{\displaystyle O}{\overset{\|}{C}}- \text{ or } -\overset{\displaystyle O}{\overset{\|}{C}}-O-$$

m is 1 or 2, but can only be 2 when an additional R^5 group separates the A structures; R^5 is a C_1–C_{10} alkylene, hydroxyalkylene, alkenylene, arylene, or alkarylene group; each n is independently 0 or 1; R^6 is selected from the group consisting of straight chain, branched chain or cyclic C_1–C_{30} alkyl, hydroxyalkyl, alkenyl and hydroxyalkenyl moieties and alkaryl moieties in which the alkyl group has 6–24 carbon atoms; R^7 is a C_2–C_4 alkylene group or mixtures thereof; y is from 3 to 100; and X is sulfate, sulfonate or carboxylate; provided that the above groups are selected such that R^1, R^2, R^3 and R^6, together, contain from 12 to 50 carbon atoms and no peroxy linkages are present in the compound.

4,301,045
SYNTHESIS OF PEPTIDES
Emil Kaiser, Chicago, and Robert L. Colescott, Bourbonnais, both of Ill., assignors to Armour Pharmaceutical Company, Kankakee, Ill.
Filed May 2, 1977, Ser. No. 792,524
Int. Cl.³ C08L *37/00*; C07C *103/52*
U.S. Cl. 260—8 **10 Claims**

1. A resin peptide having the structure:

$$NH_2-Pro-\underset{\underset{\displaystyle Bz}{|}}{Asp}-CH_2-(R)$$

in which
(R) is a crosslinked polystyrene resin, and Bz is benzyl, p-methoxybenzyl, p-chlorobenzyl, P-nitrobenzyl or benzhydryl.

4,301,046
UNIVERSAL NAIL POLISH USING POLYESTER RESIN
Mitchell L. Schlossman, Rockaway, N.J., assignor to Tevco Inc.
Filed Jan. 10, 1980, Ser. No. 111,174
Int. Cl.³ C08L *1/10*
U.S. Cl. 260—16 **29 Claims**

1. A nail polish formed from 92% to 96% of ingredients including a film former, colorant, plasticizer, and solvent; and 4% to 8% polyester resin, P1 said polyester resin being formed from 2,2,4-trimethyl-1, 3-pentanediol, isophthalic acid-85, and trimellitic anhydride.

4,301,047
FREE-FLOWING POLYOLEFIN MOLDING COMPOSITION OF HIGH FILLER CONTENT, PROCESS FOR ITS MANUFACTURE AND ITS USE
Barry M. Jones, Frankfurt am Main, Fed. Rep. of Germany, assignor to Hoechst Aktiengesellschaft, Frankfurt am Main, Fed. Rep. of Germany
Filed Mar. 12, 1980, Ser. No. 129,719
Claims priority, application Spain, Mar. 14, 1979, 478.625
Int. Cl.³ C08L *1/00*
U.S. Cl. 260—17.4 R **5 Claims**

1. A free-flowing polyolefin molding composition having a high filler content and containing from 40 to 60% by weight of polyolefin powder and from 60 to 40% by weight of a filler mixture of from 30 to 75 parts by weight of wood flour and from 70 to 25 parts by weight of chalk or talc.

4,301,048
WATER-DISPERSED RESIN COMPOSITION
Takao Hirayama; Minoru Fujishima; Hisasi Kaneko, and Shigeyoshi Tanaka, all of Hitachi, Japan, assignors to Hitachi Chemical Company, Ltd., Tokyo, Japan
Filed Sep. 5, 1980, Ser. No. 184,378
Claims priority, application Japan, Sep. 10, 1979, 54-116447
Int. Cl.³ C08L *67/08*
U.S. Cl. 260—22 CQ **6 Claims**

1. A water-dispersed resin composition comprising
(i) water and
(ii) a neutralized resin dispersed in water prepared by neutralizing a part or whole of the carboxyl groups in an alkyd resin produced by reacting
(A) 0 to 60% by weight of one or more oils or fatty acids,
(B) 10 to 60% by weight of tris(2-hydroxyethyl)isocyanurate and/or tris(hydroxymethyl)isocyanurate as a trihydric alcohol,
(C) 0 to 50% by weight of one or more polyhydric alcohols having 2 to 6 hydroxyl groups in a molecule except for the component (B),
(D) 0 to 20% by weight of one or more monobasic acids having 6 to 18 carbon atoms in a molecule except for the component (A),
(E) 10 to 50% by weight of one or more polybasic acids having 4 to 10 carbon atoms in a molecule or acid anhydrides thereof, and
(F) 2 to 15% by weight of polyoxyethylene glycol having a molecular weight of 600 to 20,000, wherein individual components are formulated in terms of the ratio of the number of hydroxyl groups/the number of carboxyl groups in the range of 1.0/1 to 1.6/1, and said alkyd resin has an acid value of 30 or less.

4,301,049
METHOD OF PRODUCING AN AZO PIGMENT SUITABLE FOR USE IN A GRAVURE PRINTING INK AND AZO PIGMENTS PRODUCED THEREBY
Takenori Funatsu; Masuhiko Maejima; Yoichi Inuzuka, and Kosaku Tsuji, all of Fuji, Japan, assignors to Toyo Ink Mfg. Ltd., Tokyo, Japan
Filed May 1, 1980, Ser. No. 145,626
Claims priority, application Japan, May 18, 1979, 54/60519
Int. Cl.³ C09D *11/02, 11/06*
U.S. Cl. 260—23 AR **12 Claims**

1. A method of producing an azo pigment, which method comprises treating 100 parts by weight of an azo pigment with:
1–30 parts by weight of an amine;
0.1–0.5 equivalents, based on said amine, of:
(i) a fatty acid;
(ii) a rosin or rosin derivative having a molecular weight of less than 2000; or
(iii) a mixture of (i) and (ii); and
0.5–50 parts by weight of a carboxyl group-containing resin having a number average molecular weight in the range of from 2000 to 150,000 and an acid value of at least 50.

4,301,050
ROAD MARKING COMPOSITION
Shinichi Masuda, Tokyo; Tsugio Tanaka, Ageo; Naoyuki Kishi, Tokyo, and Yukio Nagasaka, Kawagoe, all of Japan, assignors to Atom Chemical Paint Co., Ltd., Tokyo, Japan
Filed Jun. 9, 1980, Ser. No. 157,739
Claims priority, applicatioo Japan, Jnn. 7, 1979, 54-70548
Int. Cl.³ C08L *91/06*; C08F *10/14*; C09D *5/00*; C09F *1/04*
U.S. Cl. 260—28 R **17 Claims**

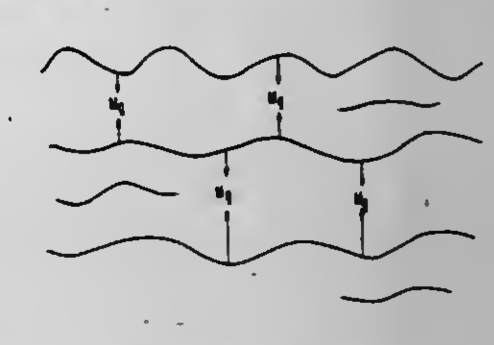

1. A road marking composition comprising a resin having a melt viscosity of from about 30 to 80 cps at 150° C. and a modifier composed of at least one metal oxide of at least one metal selected from Groups II and IV of short form of the Periodic Table.

7. A road marking composition as in claim 1, 2, 3, or 4, wherein said resin selected from the group consisting of a rosin-modified maleic resin, a hydrogenated rosin, a rosin ester, a polyamide, and a petroleum resin.

4,301,051

CHEMICALLY MODIFIED ASPHALT COMPOSITIONS

Alfred Marzocchi; Michael G. Roberts; Charles E. Bolen, and Edward R. Harrington, all of Newark, Ohio, assignors to Owens-Corning Fiberglas Corporation, Toledo, Ohio

Continuation of Ser. No. 44,875, Jun. 4, 1979, abandoned, which is a continuation of Ser. No. 881,108, Feb. 24, 1978, abandoned. This application Jul. 7, 1980, Ser. No. 166,635

Int. Cl.^{3} **C08L** *91/00*

U.S. Cl. 260—28.5 AS **14 Claims**

1. A chemically-modified asphalt prepared by first reacting an asphalt with (1) a polymerizable vinyl aromatic monomer and (2) a rubbery polymer, and then reacting the product with a cross linking agent selected from the group consisting of an organic polyisocyanate, an organic diepoxide and an organic polycarboxylic acid or anhydride.

4,301,052

SIZING COMPOSITION AND SIZED STRAND USEFUL AS REINFORCEMENT FOR REINFORCED MOLDED COMPOSITES HAVING IMPROVED PHYSICAL PROPERTIES

Gary A. Pollman, Sylvania, Ohio, assignor to PPG Industries, Inc., Pittsburgh, Pa.

Filed Sep. 4, 1979, Ser. No. 72,713

Int. Cl.^{3} **C08L** *75/08*

U.S. Cl. 260—29.2 TN **13 Claims**

1. An aqueous sizing composition for use in treating glass fibers, to produce treated glass fibers having good integrity between fibers in strands and/or between strands, and good wet-through and wet-out and where the treated glass fibers are useful in producing reinforced molded composites having improved physical properties and, comprising in weight percent of the aqueous sizing composition:

(a) about 2 to about 40 of curable polyurethane latex,

(b) about 0.05 to about 2 of cationic silane having unsaturation,

(c) about 0.05 to about 2 of polyamino silane, and

(d) water in the remaining amount.

4,301,053

POLYURETHANE RESIN COATING COMPOSITION

Austin A. Wolfrey, Peabody, Mass., assignor to General Electric Company, Schenectady, N.Y.

Filed Jan. 29, 1980, Ser. No. 116,925

Int. Cl.^{3} **C08L** *75/04*

U.S. Cl. 260—29.2 TN **11 Claims**

1. A two-package aqueous coating composition comprising as

Part A

(i) a carboxyl group-containing urethane prepolymer, said prepolymer being dispersed in

(ii) a polar liquid medium comprising predominantly water; and as

Part B

a trifunctional aziridine compound, said compound being adapted to react with said urethane prepolymer to cross-link the same; and

a minor, effective amount of N-methylpyrrolidone, sufficient to enhance the adhesion of a coating prepared from such composition to a non-polar thermoplastic substrate.

4,301,054

THERMOGRAPHIC CHOLESTERIC COATING COMPOSITIONS

William L. Buirley, West Carrollton; Donald E. Koopman, Miami Township, Montgomery County; David B. McQuain, Dayton, and William H. Reeves, Englewood, all of Ohio, assignors to Thermal Imagery, Inc., Miamisburg, Ohio

Filed Jun. 4, 1979, Ser. No. 45,276

Int. Cl.^{3} **C08L** *61/24;* **B01J** *13/02;* **C09K** *3/34*

U.S. Cl. 260—29.4 UA **15 Claims**

1. An aqueous coating composition comprising:

(a) a polymeric, film-forming binder material and

(b) microcapsules having transparent wall material, and having core material consisting essentially of about 55 to about 75% of cholesteryl pelargonate, about 14 to about 35% of oleyl cholesteryl carbonate, about 2.0 to about 6.0% of cholesteryl propionate and about 4.5 to about 7.2% of cholesteryl chloride.

4,301,055

PRINTING INKS CONTAINING NOVEL LIMED RESINATES

Rupert J. Schefbauer, Hasbrouck Heights, N.J., assignor to Inmont Corporation, Clifton, N.J.

Continuation-in-part of Ser. No. 65,651, Aug. 10, 1979, abandoned, which is a continuation-in-part of Ser. No. 932,971, Aug. 11, 1978, abandoned. This application Apr. 7, 1980, Ser. No. 137,924

Int. Cl.^{3} **C08K** *5/01;* **C08L** *93/04;* **C09D** *11/08*

U.S. Cl. 260—33.6 R **10 Claims**

1. A calcium resinate comprising the reaction product of calcium hydroxide and rosins with

(a) 1–25% by weight of a reactive hydrocarbon resin, and

(b) 3–30% by weight of a polyanhydride of α-olefin-maleic anhydride.

4,301,056

ORGANOPOLYSILOXANE ELASTOMERS

Jörg Patzke, and Karl-Heinrich Wegehaupt, both of Burghausen, Fed. Rep. of Germany, assignors to Wacker-Chemie GmbH, Munich, Fed. Rep. of Germany

Filed Mar. 13, 1980, Ser. No. 129,943

Claims priority, application Fed. Rep. of Germany, Mar. 22, 1979, 2911352

Int. Cl.^{3} **C08L** *83/04*

U.S. Cl. 260—37 SB **6 Claims**

1. An organopolysiloxane composition which is capable of being crosslinked with an organic peroxide containing at least 0.1 percent by weight based on the weight of the composition of calcium hydroxide which has been treated with an organosilicon compound to impart hydrophobic properties thereto.

4,301,057

TRIS-(3-HYDROXYALKYL) PHOSPHINE OXIDE FLAME RETARDANT COMPOSITIONS

Diza P. Braksmayer, and Syed N. Hussain, both of Plainsboro, N.J., assignors to FMC Corporation, Philadelphia, Pa.

Filed Jan. 28, 1980, Ser. No. 116,335

Int. Cl.^{3} **C08K** *5/53*

U.S. Cl. 260—37 N **21 Claims**

1. A thermoplastic glass filled polyamide polymer rendered flame retardant by having combined therewith an effective amount of a tris-(3-hyroxyalkyl) phosphine oxide having the formula:

$$(HOCH_2\overset{\overset{\textstyle R}{|}}{C}HCH_2)_3PO$$

wherein R is any radical selected from the group consisting of hydrogen and methyl radicals.

4,301,058

FLAMEPROOFING ADDITIVES FOR THERMOPLASTIC SYNTHETIC RESINS

Ernst Neukirchen, Cologne, and Utto Kerscher, Lechenich, both of Fed. Rep. of Germany, assignors to Chemische Fabrik Kalk GmbH, Cologne, Fed. Rep. of Germany

Filed Jan. 9, 1980, Ser. No. 110,572

Claims priority, application Fed. Rep. of Germany, Feb. 12, 1979, 2905253

Int. Cl.^{3} **C08L** *67/00*

U.S. Cl. 260—40 R **18 Claims**

1. A flameproofing additive for thermoplastic synthetic resin compositions, comprising 60–30 wt. % of a lower-melting, flame retardant brominated aryl-containing organic bromine compound which melts at 80°–200° C. and 40–70 wt. % of a higher-melting, flame retardant brominated aryl-containing organic bromine compound which melts at 280°–400° C., each of the flame retardant organic bromine compounds being thermally stable at the processing temperature to which the thermoplastic synthetic resin is to be exposed after being combined with the flameproofing additive.

13. A flame retardant composition comprising a pulverulent or granulated thermoplastic synthetic resin which is to be further processed by heating and an effective amount of a flameproofing additive comprising 60–30 wt. % of a lower-melting, flame retardant brominated aryl-containing organic bromine compound which melts at the temperature of the heating treatment to which the synthetic resin will be exposed and 40–70 wt. % of a higher-melting, flame retardant brominated aryl-containing organic bromine compound which remains unmelted at said temperature.

4,301,059

COMPOSITIONS OF A POLYPHENYLENE ETHER RESIN AND AN AROMATIC ALKENYL RESIN THAT IS MODIFIED BY RUBBER PARTICLES IN THE FORM OF BUNDLES OF RUBBER FIBERS OF RUBBER SHEETS

Glenn D. Cooper, and Arthur Katchman, both of Delmar, N.Y., assignors to General Electric Company, Selkirk, N.Y.

Filed Dec. 31, 1979, Ser. No. 108,375

Int. Cl.^{3} **C08K** *7/14;* **C08L** *61/04*

U.S. Cl. 260—42.18 **15 Claims**

1. A thermoplastic molding composition which comprises:

(a) a polyphenylene ether resin; and

(b) a polymeric composition of

a polymer of at least one monoalkenyl aromatic monomer having dispersed therein, an amount sufficient to toughen said polymer, of a diene rubber, said rubber being dispersed as crosslinked rubber particles and being grafted with said monomer as polymer and having occluded therein said polymer, said particles having a weight average diameter of from 0.5 to 10 microns, said rubber being structured in a morphological form comprising aggregations of rubber fibers, aggregations of rubber sheets or mixtures thereof.

9. A composition as defined in claim 1 wherein the reinforcing filler comprises from 1–40 parts by weight of fibrous glass.

4,301,060

POLYVINYL CHLORIDE CONTAINING A FILLER

William S. Underwood, Maidenhead, and Louis Bohm, London, both of England, assignors to Kestrel Chemicals Limited, Woodley, England

Continuation-in-part of Ser. No. 42,451, May 25, 1979, abandoned. This application Sep. 11, 1979, Ser. No. 74,769

Claims priority, application United Kingdom, Aug. 11, 1977, 33745/77; Dec. 12, 1977, 51601/77; May 31, 1978, 26090/78

Int. Cl.^{3} **C08K** *3/36*

U.S. Cl. 260—42.49 **20 Claims**

1. A solid resin composition suitable for forming into artifacts, characterised in that it contains a thermoplastic polyvinyl chloride resin and, as a filler, particulate amorphous silica, which silica is obtained by a process in which silica is reduced and the reduction product is oxidised in the vapour phase to form silica.

4,301,061

DIBENZODIOXAPHOSPHEPINES AND STABILIZED POLYMERS

Michael Rasberger, Riehen, Switzerland, assignor to Ciba-Geigy Corporation, Ardsley, N.Y.

Continuation-in-part of Ser. No. 39,701, May 18, 1979. This application Oct. 17, 1980, Ser. No. 198,075

Claims priority, application Switzerland, May 18, 1978, 5390/78

Int. Cl.^{3} **C07F** *9/65;* **C08K** *5/53*

U.S. Cl. 260—45.8 N **3 Claims**

1. N-(2,4,8,10-tetra-tert.butyldibenz[d,f][1,3,2]dioxaphosphepin-6-yl)-hexamethyleneimine.

2. A stabilised organic polymer containing from 0.005 to 5% by weight of a compound according to claim 1.

4,301,062

DIESTER OF 3,5,3',5'-TETRABROMO-BISPHENOL A WITH HALOGENATED AROMATIC CARBOXYLIC ACID

Izumi Yamashita; Kazuo Yoshida; Yuji Kusumi, all of Yokohama; Kunio Fukuda, Chigasaki, and Kichiya Tazaki, Yokohama, all of Japan, assignors to Asahi Dow Limited, Tokyo, Japan

Filed Oct. 11, 1979, Ser. No. 83,957

Int. Cl.^{3} **C08K** *5/10;* **C07C** *69/78*

U.S. Cl. 260—45.75 B **8 Claims**

1. A compound of the formula (I):

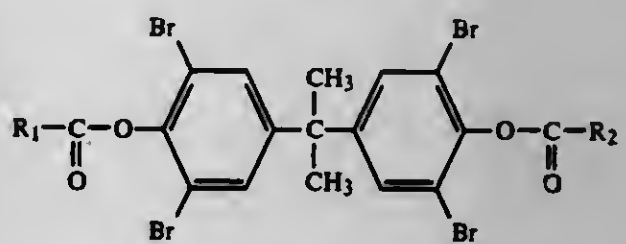

(I)

wherein R_1 and R_2, which may be identical or different, represent the groups of the formula (II):

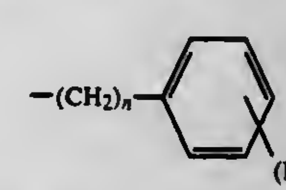

(II)

wherein n is an integer of 1 to 4; and m an integer of 1 to 5.

2. A polymeric material improved in flame-retardancy, comprising:

(a) at least one inflammable polymer selected from the group consisting of polystyrene, acrylonitrilestyrene resin, acrylonitrile-butadiene-styrene resin, polyphenylene oxide, polyester, polyamide, polyethylene, polypropylene, polyisoprene, polybutadiene, polyacrylate and polycarbonate; and

(b) at least one compound of the formula (I):

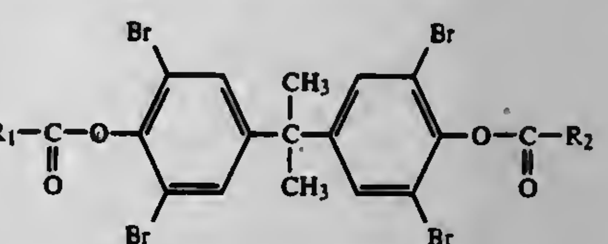

(I)

wherein R_1 and R_2, which may be identical or different, represent the groups of the formula (II):

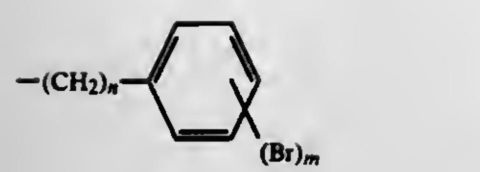

(II)

wherein n is an integer of 1 to 4; and m an integer of 1 to 5.

4,301,063

COMPOUND FOR PINHOLE-FREE ROTATIONAL CASTING

Michael W. Sowa, Milltown, N.J., assignor to Union Carbide Corporation, New York, N.Y.

Continuation-in-part of Ser. No. 158,572, Jun. 30, 1971, Pat. No. 3,974,114, which is a continuation of Ser. No. 847,431, Aug. 4, 1969, abandoned. This application Oct. 3, 1975, Ser. No. 619,314

Int. Cl.³ C08K *5/36*

U.S. Cl. 260—45.85 S **12 Claims**

1. A composition of matter formed by incorporating into a solid polymer selected from the group consisting of ethylene homopolymers, copolymers of ethylene and at least one acyclic mono-1 olefin hydrocarbon having 3 to 4 carbon atoms per molecule, and mixtures thereof, having a melt index of about 10 to 25 and a density in the range of 0.92 to 0.97,

(a) a crosslinking amount of an acetylenic diperoxy compound which is hexyne having the formula

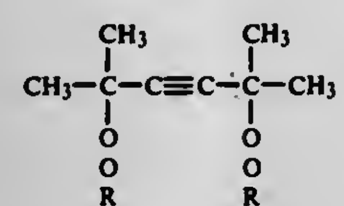

wherein R is tertiary butyl, and

(b) between 0.02 and 0.1 weight percent based on the weight of solid polymer, of at least one ester of thiodipropionic acid of the formula

R_1—OOC—CH_2—CH_2—S—CH_2—CH-
$_2$—COO—R_2

wherein R_1 and R_2 are each lauryl hydrocarbon radicals having 12 carbon atoms, and wherein at least one R has at least 10 carbon atoms per molecule.

4,301,064

UBIQUITARY TISSUE PROTEIN PP_8

Hans Bohn, Marburg an der Lahn, Fed. Rep. of Germany, assignor to Behringwerke Aktiengesellschaft, Marburg an der Lahn, Fed. Rep. of Germany

Filed Sep. 27, 1979, Ser. No. 79,589

Claims priority, application Fed. Rep. of Germany, Sep. 29, 1978, 2842467

Int. Cl.³ C07G *7/00*

U.S. Cl. 260—112 R **2 Claims**

1. An isolated, enriched tissue protein obtainable by frsctionating an aqueous organ extract, the amino-acid composition of said tissue protein being:

Amino acid	Mole %	Variation coefficient (%)
Lysine	7.08	3.21
Histidine	1.49	22.07
Arginine	3.56	3.86
Aspartic acid	10.32	6.79
Threonine	6.08	0.96
Serine	7.88	3.99

-continued

Amino acid	Mole %	Variation coefficient (%)
Glutamic acid	12.97	3.48
Proline	2.87	4.84
Glycine	6.64	2.19
Alanine	6.41	0.65
Cystine/2	2.00	17.75
Valine	5.91	3.81
Methoionine	4.67	14.45
Isoleucine	3.10	2.01
Leucine	9.29	3.58
Tryosine	1.65	14.40
Phenylalanine	6.67	7.43
Tryptophan	1.41	2.13

and said tissue protein having

(a) a protein proportion of 96±3%,

(b) a carbohydrate content of 4.1±0.95%, of which 3.15±0.5% are hexoses, 0.61±0.2% is hexoseamine, 0.11±0.05% is fucose and 0.23±0.20 is neuraminic acid;

(c) a sedimentation coefficient S_{20} $_w$ of 3.7±0.3 S;

(d) a molecular weight of 45 000±5 000, determined in the ultracentrifuge;

(e) a molecular weight of 55 000±5 000 determined in sodium dodecylsulfate (SDS)-containing polyacrylamide gel;

(f) an extinction coefficient $E_{1\ cm}$1% (280 mm) of 8.1±1.0;

(g) an electrophoretic mobility in the range of the alpha$_1$-globulins; and

(h) an isoelectric point of 4.7±0.3.

4,301,065

NOVEL POLYPEPTIDES HAVING THYMIC ACTIVITY OR AN ANTAGONISTIC ACTIVITY AND PROCESSES FOR THEIR SYNTHESIS

Jean-Francois Bach, Paris; Mireille Dardeune; Jean-Marie Pleau, both of Palaiseau; Jean Hamburger, Paris; Evanghelos Bricas, Antony; Jean Martinez, Montpellier; Didier Blanot, Bures S. Yvette, and Genevieve Anger, Limours, all of France, assignors to Agence Nationale de Valorisation de la Recherche (ANVAR), Paris, France

Filed May 24, 1978, Ser. No. 909,163

Claims priority, application France, May 25, 1977, 77 15963; Apr. 21, 1978, 78 11870

Int. Cl.³ C07C *103/52*

U.S. Cl. 260—112.5 R **4 Claims**

1. A polypeptide having thymic activity selected from the group consisting of:

Ala-Lys-Ser-Gln-Gly-Gly-Ser-Asn,

Gln-Ala-Lys-Ser-Gln-Gly-Gly-Ser-Asn,

Z-Gln-Ala-Lys-Ser-Gln-Gly-Gly-Ser-Asn,

Lys-Ser-Gln-Gly-Gly-Ser-Asn,

PyroGlu-Ala-Lys-(Ac)-Ser-Gln-Gly-Gly-Ser-Asn,

PyroGlu-Ala-D-Lys-Ser-Gln-Gly-Gly-Ser-Asn,

PyroGlu-Ala-Lys-Ser-Gln-Gly-Gly-Ser-Ala-NH_2,

PyroGlu-Ala-Lys-Ser-Gln-D-Ala-Gly-Ser-Asn, or

PyroGlu-Ala-Lys-Ser-Gln-Gly-Gly-Ser-D-Asn.

4,301,066

PREPARATION OF (D-TRP ⁶)-LH-RH VIA THE HEPTAPEPTIDE H-SER-TYR-D-TRP-LEU-ARG-PRO-GLY-NH_2

Francesco Bellini, Mount Royal, and Hans U. Immer, St. Laurent, both of Canada, assignors to American Home Products Corp., New York, N.Y.

Filed May 8, 1980, Ser. No. 147,884

Int. Cl.³ C07C *103/52*

U.S. Cl. 260—112.5 LH **4 Claims**

1. A process for preparing the decapeptide Pyr-His-Trp-Ser-Tyr-D-Trp-Leu-Arg-Pro-Gly-NH_2, which comprises (i) coupling the protected dipeptide Boc-Ser(Bu^t-)-Tyr-$NHNH_2$ and the unprotected pentapeptide H-D-Trp-Leu-Arg-Pro-Gly-NH_2 by the azide coupling method to obtain the protected heptapeptide Boc-Ser(Bu^t-)-Tyr-D-Trp-Leu-Arg-Pro-Gly-NH_2, (ii) removing the Boc and Bu^t -protecting groups from the protected heptapeptide to leave the unprotected heptapeptide H-Ser-Tyr-D-Trp-Leu-Arg-Pro-Gly-NH_2 and thereafter (iii) coupling the unprotected tripeptide Pyr-His-Trp-$NHNH_2$ and the unprotected heptapeptide H-Ser-Tyr-D-Trp-Leu-Arg-Pro-Gly-NH_2 by the azide coupling method.

4,301,067

CHITIN CONTAINING POLY-ION COMPLEX

Junichi Koshugi, Tokyo, Japan, assignor to Kureha Kagako Kogyo Kabushiki Kaisha, Tokyo, Japan

Filed May 28, 1980, Ser. No. 153,906

Claims priority, application Japan, Jun. 5, 1979, 54/70463; Jun. 5, 1979, 54/70464; Jun. 5, 1979, 54/70465; Jun. 5, 1979, 54/70466

Int. Cl.³ C07C *103/52*; C08B *37/08, 37/10*

U.S. Cl. 260—112.5 R **7 Claims**

1. A poly-ion complex, comprising: chitin or N-acylchitosan derivative having carboxymethyl; and a polyelectrolyte, the acyl group of said N-acylchitosan derivative having an alkyl group of 1 to 12 carbon atoms.

7. The poly-ion complex according to claim I, wherein the polyelectrolyte is an aqueous solution-soluble synthetic compound selected from the group consisting of polystyrenesulfonate, polyethylenesulfonate, partially sulfated polyvinyl alcohol, polyacrylate, polymethacrylate, poly-L-glutamate, poly-L-lysine, polyethyleneimine, polyvinylpyridine, polyvinylbenzyltrimethylammonium salt and polydiallyldimethylammonium salt.

4,301,068

AZO DYES FROM A 2-AMINOTHIOPHENE HAVING 1 OR 2 SULFATED HYDROXYALKOXYCARBONYL OR N-(HYDROCYALKYL) CARBAMOYL GROUPS ON ITS RING

Ralph R. Giles, and Max A. Weaver, both of Kingsport, Tenn., assignors to Eastman Kodak Company, Rochester, N.Y.

Filed Dec. 5, 1979, Ser. No. 100,628

Int. Cl.³ C09B *29/036, 29/09, 29/32, 29/36*

U.S. Cl. 260—152 **4 Claims**

1. A dye of the formula:

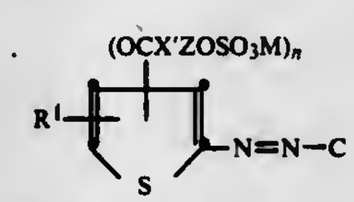

wherein the 2-thienyl ring containing the

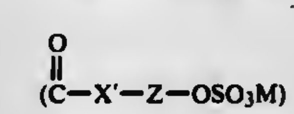

group or groups is unsubstituted or substituted with 1 or 2 R^1 substituents independently selected from hydrogen, alkyl, alkoxy, aryl, thiocyano, formyl, alkylthio, carbamoyl, alkoxycarbonyl, alkylcarbamoyl, alkanoyl, alkylsulfonyl, aroyl, arylsulfonyl, sulfamoyl, SO_2NH(alkyl), SO_2N(dialkyl), alkylsulfonamido, alkanoylamino, halogen, trifluoromethyl, SO_3(aryl), and arylazo; C is a coupler selected from

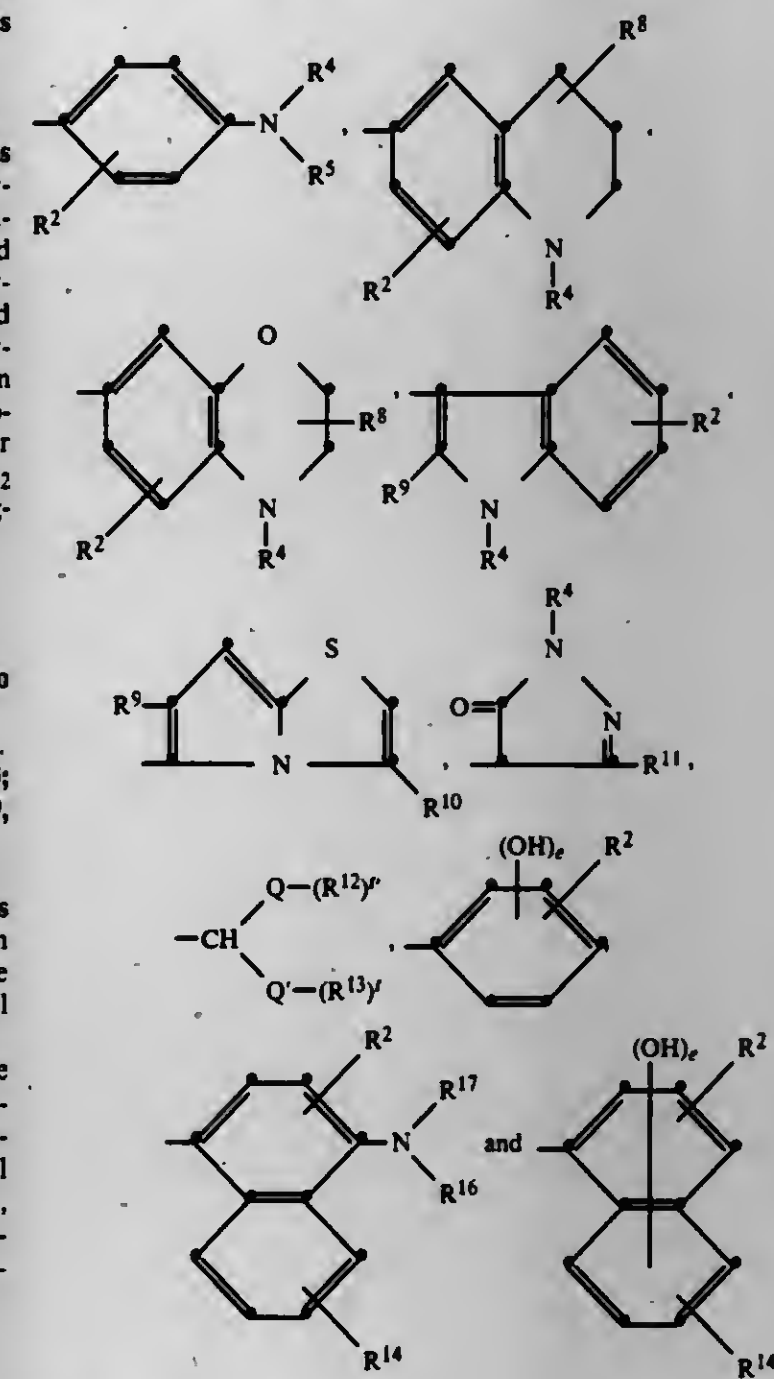

wherein

R^2 and R^{14} each represents up to three groups selected from hydrogen, fluorine, chlorine, bromine, alkyl, cycloalkyl, alkoxy, phenoxy, alkylthio, arylthio, and radicals having the formula —NH—X—R^3 in which X is —CO—, —COO—, or —SO_2— and R^3 is selected from alkyl and alkyl substituted with halogen, hydroxy, phenoxy, aryl, cyano, cycloalkyl, alkylsulfonyl, alkylthio, alkanoyloxy, and alkoxy, and when X is —CO—, R^3 also is selected from hydrogen, amino, alkylamino, dialkylamino, arylamino, aryl, and furyl;

R^4 and R^5 are each selected from hydrogen, alkyl, aryl, cycloalkyl, and alkyl substituted with halogen, CN, OH, alkoxy, aryloxy, alkoxyalkoxy, alkanoyl, alkanoyloxy, carbamoyl, alkylcarbamoyl, sulfamoyl, alkylsulfamoyl, alkoxyalkanoyloxy, and cycloalkyl, and R^4 and R^5 together represent a single, combined group —$CH_2CH_2CH_2CH_2CH_2$—, —$CH_2CH_2OCH_2CH_2$—, —CH_2CH_2—S—CH_2CH_2—, or —CH_2C-H_2—SO_2—CH_2CH_2—;

R^8 represents one or two groups each selected from hydrogen, alkyl and alkyl substituted with —CN, alkoxy, alkoxycarbonyl, alkoxycarbonyloxy, phenyl, cyclohexoxy, —OH, —Cl and Br;

R^9, R^{10} and R^{11} are each selected from hydrogen, alkyl, phenyl, or phenyl substituted with 1-3 groups selected

from Cl, Br, alkyl or alkoxy, alkylthio, benzylthio, cyclohexylthio and phenylthio;

Q and Q' are each selected from —CO—, —SO_2—, or —CN; R^{12} and R^{13} are each selected from alkyl; hydroxyalkyl, alkoxy, alkoxycarbonylamino, trifluoromethyl, phenyl or phenyl substituted with 1-3 groups selected from Cl, Br, alkyl or alkoxy, alkoxycarbonylalkyl, cyanoalkyl, amino, haloalkyl, alkylamino, alkylthio, benzylthio, cyclohexylthio and phenylthio; and R^{12} and R^{13} together comprise —$CH_2C(CH_3)_2CH_2$—, or 1,2—C_6H_4— connecting Q and Q'; R^{16} and R^{17} are selected from hydrogen, cycloalkyl, aryl, alkyl, and alkyl substituted with alkoxy, hydroxy, alkoxyalkoxy, hydroxyalkoxy, carbamoyl, sulfamoyl, alkanoylamino, or alkenylsulfonyl, and aryl substituted with hydroxyalkyl; e is 1 or 2; t and t' are each 1 or zero; X' is 0, NH, N(alkyl)—, or N(aryl)—; Z is selected from straight- or branched-chain alkylene, and such alkylene substituted with phenyl, halogen, OSO_3M, alkoxy or aryloxy groups, —$CH_2(CH_2)_m$V—$CH_2(CH_2)_p$—, where m is 1, 2 or 3, p is 0, 1, 2 or 3, and V is O, S, SO_2, —SO_2NH—, —SO_2N(alkyl)—, —SO_2N(aryl), —N(SO_2 aryl)—, —NH, —NHCO—, —NHCONH, —N(SO_2 alkyl), or —CON(alkyl); M is H, Na, K or NH_4; n is 1 or 2; and wherein each of the above alkyl and alkoxy groups contain from 0 to three of the following: hydroxy; halogen; cyano; succinimido; glutarimido; phthalimido; 2-pyrrolidono; cyclohexyl; phenyl or phenyl substituted with alkyl, alkoxy, halogen, alkanoylamino, cyano or alkoxycarbonyl; alkanoylamino; sulfamoyl; alkylsulfamoyl; vinylsulfonyl; acrylamido; phthalimidinyl; benzoylsulfonicimidyl; alkylsulfonamido; phenylsulfonamido; alkoxycarbonylamino; alkylcarbamoyloxy; alkoxycarbonyl; alkoxycarbonyloxy;

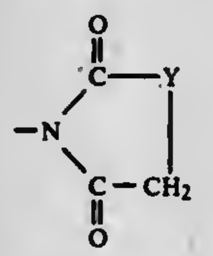

wherein Y is —NH—, —NH—alkyl—, —O—, —S—, or —CH_2O—; —S—R^6, wherein R^6 is alkyl, phenyl, phenyl substituted with halogen, alkyl, alkoxy, alkanoylamino, cyano, or alkoxycarbonyl, pyridyl, pyrimidinyl, benzoxazolyl, benzimidazolyl, benzothiazolyl, or

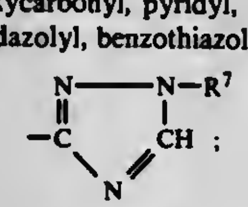

—SO_2R^3; —$COOR^3$; —OXR^3; —NH—X—R^3; —X—R^3; —$SO_2NR^7R^7$; wherein R^3 and X are as defined above and each R^7 is selected from H and R^3; alkoxy; alkoxy substituted with hydroxy, cyano, alkanoyloxy, or alkoxy; phenoxy; or phenoxy substituted with one or more of alkyl, alkoxy or halogen.

4,301,069

AZO DYES FROM FIVE MEMBERED RING HETEROCYCLIC AMINES AND ANILINE, TETRAHYDROQUINOLINE AND BENZOMORPHOLINE COUPLERS CONTAINING THIOSULFATE ALKYL GROUPS

Max A. Weaver, and Clarence A. Coates, Jr., both of Kingsport, Tenn., assignors to Eastman Kodak Company, Rochester, N.Y.

Filed Jun. 13, 1980, Ser. No. 159,092

Int. Cl.³ C09B *27/033, 29/036, 29/039, 29/042, 29/048*

U.S. Cl. 260—152 **11 Claims**

1. A compound of the formulae D-N=N-Coupler, wherein D is selected from the heterocyclic amines of the formulae

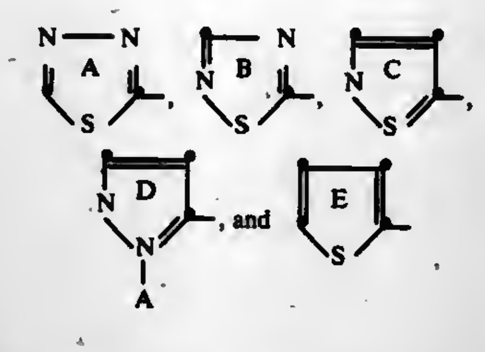

wherein

ring A is unsubstituted or substituted with a group selected from alkyl, alkoxy, halogen, alkylsulfonyl, SO_2-aryl, SO_2NH_2, SO_2NH-alkyl, SO_2N-(dialkyl), alkanoylamino, aryl, arylthio, alkenylthio, cyclohexylthio, thiocyano, cyclohexylsulfonyl, alkylthio, and cyclohexyl;

ring B is unsubstituted or substituted with a group selected from alkyl, aryl, alkylthio, cyclohexylthio and alkylsulfonyl;

ring C is unsubstituted or substituted with one or two groups selected from alkyl, halogen, cyano, carbamoyl, CONH-alkyl, alkoxycarbonyl, alkylthio, alkenylthio, arylthio, cyclohexylthio, aryloxy, and alkoxy;

ring D is unsubstituted or substituted with one or two groups selected from alkyl, alkoxycarbonyl, alkylthio, aryl, cyano, carbamoyl, alkyl carbamoyl, alkylcarbonyl and alkyl sulfonyl; and the A group on the 1-nitrogen of ring D is hydrogen, alkyl, alkoxycarbonyl, aryl, alkylsulfonyl, arylsulfonyl, or alkanoyl;

ring E is unsubstituted or substituted with one to three groups selected from alkyl, cyano, alkoxycarbonyl, alkanoyl, aroyl, alkylsulfonyl, arylsulfonyl, carbamoyl, alkyl carbamoyl, aryl, halogen, sulfamoyl, and formyl;

wherein the various alkyl or alkylene portions of the above groups are unsubstituted or substituted with one to three groups selected from hydroxy, halogen, alkoxy, aryl, aryloxy, cyclohexyl, alkylcyclohexyl, acyloxy, alkoxy carbonyl, acylamido, alkylsulfonamido, succinimido, glutarimido, phthalimido, 2-pyrrolidono, cyano, carbamoyl, alkoxyalkoxy, alkylthio, halogen, arylthio, alkylsulfonyl and arylsulfonyl;

and wherein the various above aryl groups are unsubstituted or substituted with one to three groups selected from alkyl, alkoxy, halogen, alkoxy carbonyl, alkyl sulfonyl, and alkylthio; and

the Coupler is selected from those of the formulae

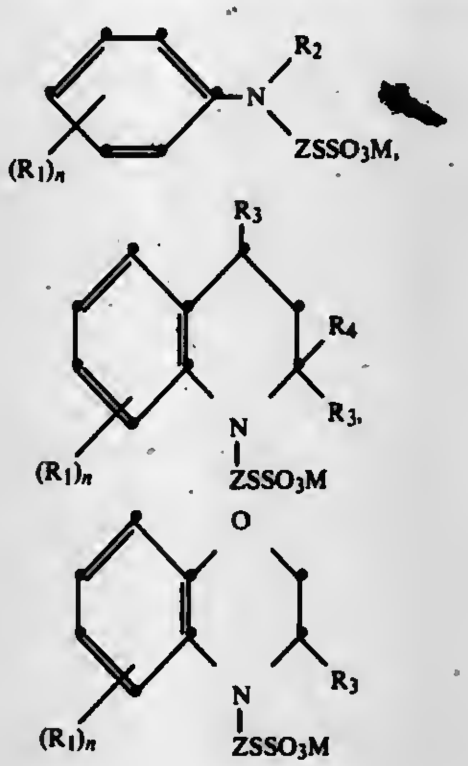

wherein R_1 is selected from hydrogen; alkyl; halogen; alkoxy; aryloxy; —NHCO—R_5; —$NHSO_2$—R_5; wherein R_5 is selected from alkyl and alkyl substituted with hydroxy, alkoxy, cyano, aryloxy, aryl, halogen, cycloalkyl, alkyl carbonyloxy, or carbamoyl; aryl; alkylamine; and 2-furyl; R_2 is selected from hydrogen; aryl; cycloalkyl; alkyl and alkyl substituted with alkoxy, alkoxyalkoxy, hydrogen, aryloxy, aryl, cycloalkyl, alkylcycloalkyl, furyl, $NHCOR_5$, $NHSO_2R_5$, aryloxy, carbamoyl, alkyl carbamoyl, cyano, alkanoyloxy, halogen, alkoxycarbonyl, succinimido, glutarimido, phthalimido, 2-pyrrolidono, sulfamoyl, alkyl substituted sulfamoyl, alkylsulfonamido, $NHSO_2$-aryl, NHCOO-alkyl, NHCONH-alkyl, formamido, alkylsulfonyl, arylsulfonyl, alkylthio, arylthio, or SO_3M; n is 0, 1 or 2; M is Na^+, K^+, NH_4^+, or H^+; R_3 and R_4 are each selected from hydrogen or alkyl; Z is selected from straight or branched chain alkylene; alkylene substituted with aryl, aryloxy, alkoxy, halogen, aryloxy or SO_3M; —$CH_2(CH_2)_m$—X—$CH_2(CH_2)_p$, where m is 1, 2, or 3, p is 0, 1, 2, or 3, and X is O, S, SO_2, —SO_2NH—,

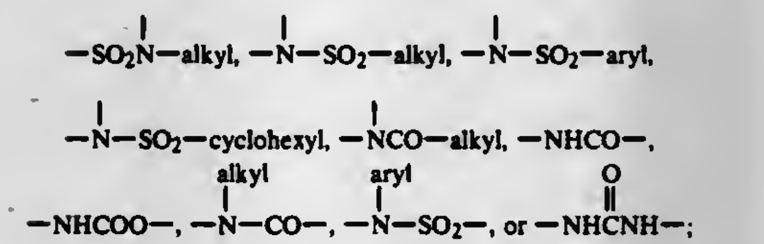

and the various aryl groups on the couplers are unsubstituted or substituted with alkyl, alkoxy, or halogen.

4,301,070

AZO DYES FROM A 5-AMINOPYRAZOLE BEARING 1 TO 2 SULFATED HYDROXYALKOXYCARBONYL OR N-(HYDROXYALKYL) CARBAMOYL GROUPS ON ITS RING

Ralph R. Giles, and Max A. Weaver, both of Kingsport, Tenn., assignors to Eastman Kodak Company, Rochester, N.Y.

Filed Dec. 5, 1979, Ser. No. 100,626

Int. Cl.³ C09B *29/036, 29/09, 29/32, 29/36*

U.S. Cl. 260—155 **4 Claims**

1. A dye of the formula:

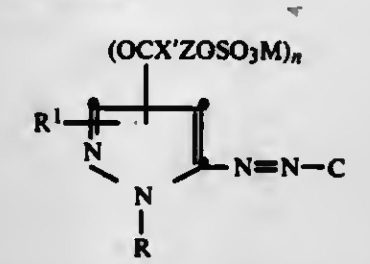

wherein R^1 is selected from hydrogen, alkyl, aryl, alkylthio, carbamoyl, alkylcarbamoyl, alkanoyl, cyanoalkyl, and halogen; R is selected from hydrogen, alkyl, aryl, alkanoyl, alkylsulfonyl, arylsulfonyl, alkyl sulfamoyl, arylsulfamoyl, alkyl substituted with alkoxy, cyano, or halogen, and aryl substituted with alkoxy, halogen or cyano; and C is selected from

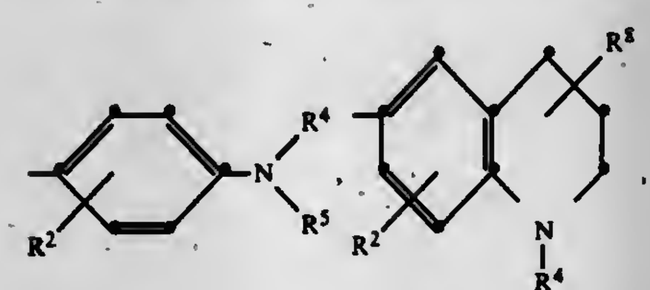

-continued

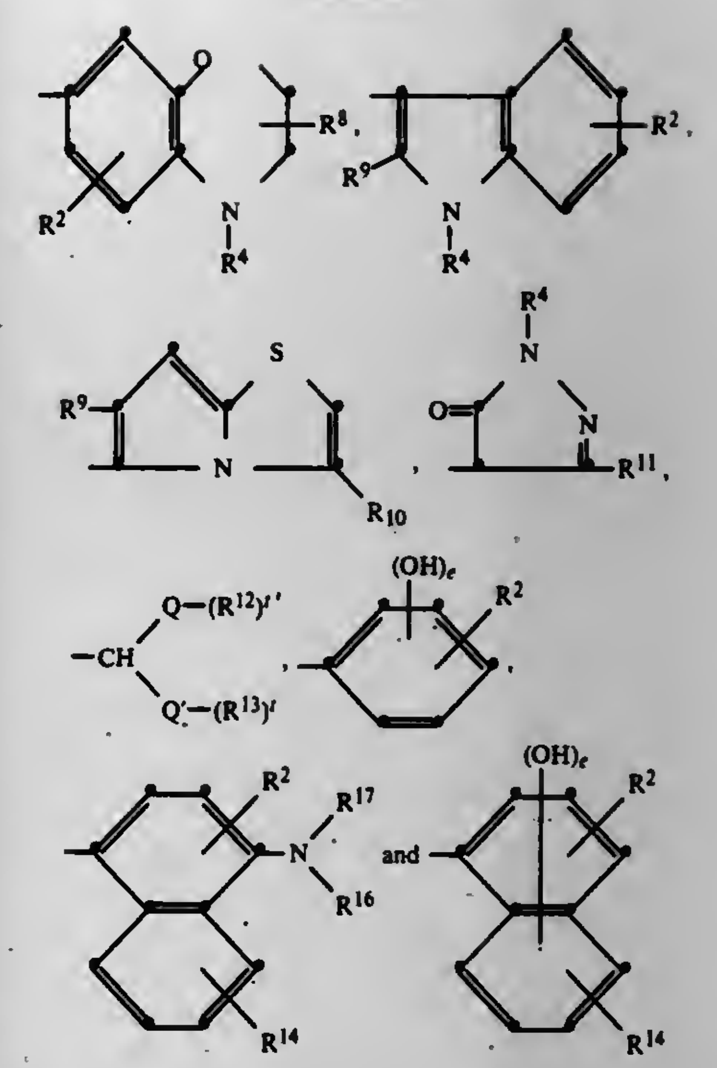

wherein

R^2 and R^{14} each represents up to three groups selected from hydrogen, fluorine, chlorine, bromine, alkyl, cycloalkyl, alkoxy, phenoxy, alkylthio, arylthio, and radicals having the formula —NH—X—R^3 in which X is —CO—, —COO—, or —SO_2— and R^3 is selected from alkyl and alkyl substituted with halogen, hydroxy, phenoxy, aryl, cyano, cycloalkyl, alkylsulfonyl, alkylthio, alkanoyloxy, and alkoxy, and when X is —CO—, R^3 also is selected from hydrogen, amino, alkylamino, dialkylamino, arylamino, aryl, and furyl;

R^4 and R^5 are each selected from hydrogen, alkyl, aryl, cycloalkyl, and alkyl substituted with halogen, CN, OH, alkoxy, aryloxy, alkoxyalkoxy, alkanoyl, alkanolyloxy, carbamoyl, alkylcarbamoyl, sulfamoyl, alkylsulfamoyl, alkoxyalkanoyloxy, and cycloalkyl, and R^4 and R^5 together represent a single, combined group —$CH_2CH_2CH_2CH_2CH_2$—, —$CH_2CH_2OCH_2CH_2$—, —CH_2CH_2—S—CH_2CH_2—, or —CH_2C-H_2—SO_2—CH_2CH_2—;

R^8 represents one or two groups each selected from hydrogen, alkyl and alkyl substituted with —CN, alkoxy, alkoxycarbonyl, alkoxycarbonyloxy, phenyl, cyclohexoxy, —OH, —Cl and Br;

R^9, R^{10} and R^{11} are each selected from hydrogen, alkyl, phenyl, or phenyl substituted with 1-3 groups selected from Cl, Br, alkyl or alkoxy, alkylthio, benzylthio, cyclohexylthio and phenylthio;

Q and Q' are each selected from —CO—, —SO_2—, or —CN; R^{12} and R^{13} are each selected from alkyl, hydroxyalkyl, alkoxy, alkoxycarbonylamino, trifluoromethyl, phenyl or phenyl substituted with 1-3 groups selected from Cl, Br, alkyl or alkoxy, alkoxycarbonylalkyl, cyanoalkyl, amino, haloalkyl, alkylamino, alkylthio, benzylthio, cyclohexylthio and phenylthio; and R^{12} and R^{13} together comprise —$CH_2C(CH_3)_2CH_2$—, or 1,2-C_6H_4— connecting Q and Q'; R^{16} and R^{17} are selected from hydrogen, cycloalkyl, aryl, alkyl, and alkyl substituted with alkoxy, hydroxy, alkoxyalkoxy, hydroxyalkoxy, carbamoyl, sulfa-

moyl, alkanoylamino, or alkenylsulfonyl, and aryl substituted with hydroxyalkyl; e is 1 or 2; t and t' are each 1 or zero; X' is O, NH, N(alkyl)—, or N(aryl)—; Z is selected from straight- or branched-chain alkylene, and such alkylene substituted with phenyl, halogen, OSO_3M, alkoxy or aryloxy groups, $—CH_2(CH_2)_mV—CH_2(CH_2)_p—$, where m is 1, 2 or 3, p is 0, 1, 2 or 3, and V is O, S, SO_2, $—SO_2NH—$, $—SO_2N(alkyl)—$, $—SO_2N(aryl)$, $—N(SO_2 aryl)—$, —NH, —NHCO—, —NHCONH, $—N(SO_2$ alkyl), or —CON(alkyl); M is H, Na, K or NH_4; n is 1 or 2; and wherein each of the above alkyl and alkoxy groups contain from 0 to three of the following: hydroxy; halogen; cyano; succinimido; glutarimido; phthalimido; 2-pyrrolidono; cyclohexyl; phenyl or phenyl substituted with alkyl, alkoxy, halogen, alkanoylamino, cyano or alkoxycarbonyl; alkanoylamino; sulfamoyl; alkyl-sulfamoyl; vinylsulfonyl; acrylamido; phthalimidinyl; benzoylsulfonicimidyl; alkylsulfonamido; phenylsulfonamido; alkoxycarbonylamino; alkylcarbamoyloxy; alkoxycarbonyl; alkoxybonyloxy;

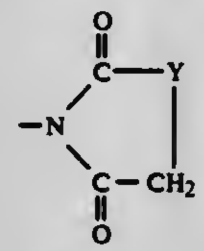

wherein Y is —NH—, —NH-alkyl—, —O—, —S—, or $—CH_2O—$; $—S—R^6$, wherein R^6 is alkyl, phenyl, phenyl substituted with halogen, alkyl, alkoxy, alkanoylamino, cyano, or alkoxycarbonyl, pyridyl, pyrimidinyl, benzoxazolyl, benzimidazolyl, benzothiazolyl, or

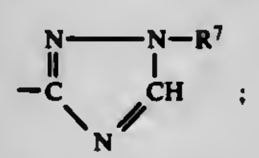

$—SO_2R^3$; $—COOR^3$; $—OXR^3$; $—NH—X—R^3$; $—X—R^3$; $—SO_2NR^7R^7$; wherein R^3 and X are as defined above and each R^7 is selected from H and R^3; alkoxy; alkoxy substituted with hydroxy, cyano, alkanoyloxy, or alkoxy; phenoxy; or phenoxy substituted with one or more of alkyl, alkoxy or halogen.

4,301,071

AZO DYES FROM ANILINE HAVING 1 OR 2 SULFATED HYDROXYALKOXYCARBONYL OR N-(HYDROXYALKYL)CARBAMOYL GROUPS ON ITS RING

Ralph R. Giles, and Max A. Weaver, both of Kingsport, Tenn., assignors to Eastman Kodak Company, Rochester, N.Y.

Filed Dec. 5, 1979, Ser. No. 100,672

Int. Cl.^{3} C09B *29/036, 29/09, 29/32, 29/36*

U.S. Cl. 260—158 **5 Claims**

1. A dye of the formula:

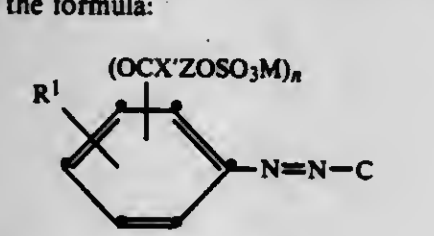

wherein the phenyl ring containing the

$$(\overset{O}{\overset{\|}{C}}—X'—Z—OSO_3M)$$

group or groups, is unsubstituted or substituted with 1-3 R^1 substituents independently selected from alkyl, alkoxy, thiocyano, alkylthio, arylazo, arylthio, aroyl, carbamoyl, alkylcarbamoyl, alkanoyl, alkylsulfonyl, arylsulfonyl, sulfamoyl, SO_2NH(alkyl), SO_2N(dialkyl), alkylsulfonamido, alkanoylamino, halogen, trifluoromethyl, and SO_3(aryl); n is 1 or 2; C is a coupler selected from

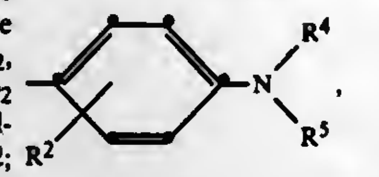

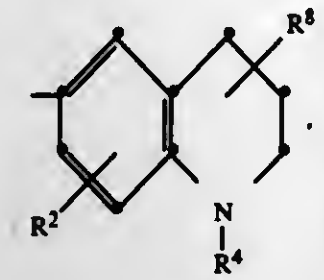

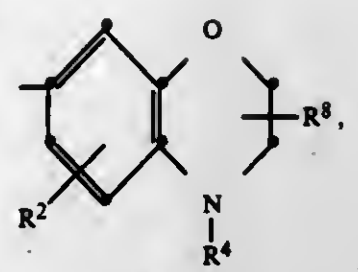

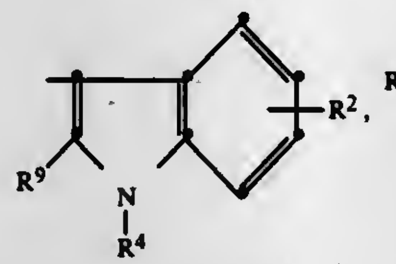

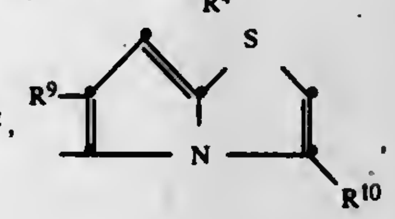

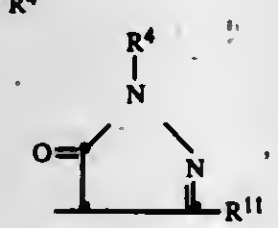

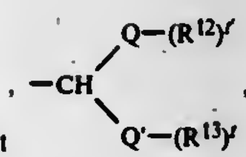

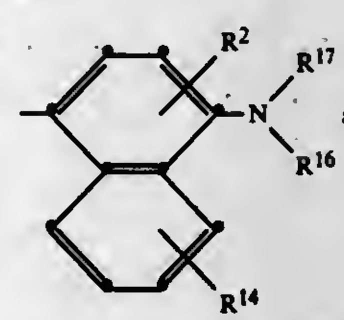

and

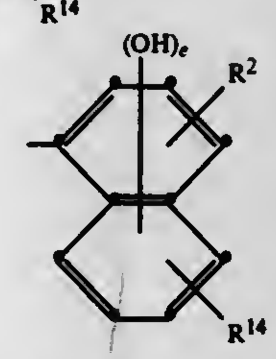

wherein

R^2 and R^{14} each represents up to three groups selected from hydrogen, fluorine, chlorine, bromine, alkyl, cycloalkyl, alkoxy, phenoxy, alkylthio, arylthio, and radicals having the formula $—NH—X—R^3$ in which X is —CO—, —COO—, or $—SO_2—$ and

R^3 is selected from alkyl and alkyl substituted with halogen, hydroxy, phenoxy, aryl, cyano, cycloalkyl, alkylsulfonyl, alkylthio, alkanoyloxy, and alkoxy, and when X is —CO—, R^3 also is selected from hydrogen, amino, alkylamino, dialkylamino, arylamino, aryl, and furyl;

R^4 and R^5 are each selected from hydrogen, alkyl, aryl, cycloalkyl, and alkyl substituted with halogen, CN, OH, alkoxy, aryloxy, alkoxyalkoxy, alkanoyl, alkanoyloxy, carbamoyl, alkylcarbamoyl, sulfamoyl, alkylsulfamoyl, alkoxyalkanoyloxy, and cycloalkyl, and R^4 and R^5 together represent a single, combined group $—CH_2CH_2CH_2CH_2CH_2—$, $—CH_2CH_2OCH_2CH_2—$, $—CH_2CH_2—S—CH_2CH_2—$, or $—CH_2CH_2—SO_2—CH_2CH_2—$;

R^8 represents one or two groups each selected from hydrogen, alkyl and alkyl substituted with —CN, alkoxy, alkoxycarbonyl, alkoxycarbonyloxy, phenyl, cyclohexoxy, —OH, —Cl and Br;

R^9, R^{10} and R^{11} are each selected from hydrogen, alkyl, phenyl, or phenyl substituted with 1-3 groups selected from Cl, Br, alkyl or alkoxy, alkylthio, benzylthio, cyclohexylthio and phenylthio;

Q and Q' are each selected from —CO—, $—SO_2—$, or —CN; R^{12} and R^{13} are each selected from alkyl, hydroxyalkyl, alkoxy, alkoxycarbonylamino, trifluoromethyl, phenyl or phenyl substituted with 1-3 groups selected from Cl, Br, alkyl, or alkoxy, alkoxycarbonylalkyl, cyanoalkyl, amino, haloalkyl, alkylamino, alkylthio, benzylthio, cyclohexylthio and phenylthio; and R^{12} and R^{13} together comprise $—CH_2C(CH_3)_2CH_2—$, or 1,2—C_6H_4— connecting Q and Q'; R^{16} and R^{17} are selected from hydrogen, cycloalkyl, aryl, alkyl, and alkyl substituted with alkoxy, hydroxy, alkoxyalkoxy, hydroxyalkoxy, carbamoyl, sulfamoyl, alkanoylamino, or alkenylsulfonyl, and aryl substituted with hydroxyalkyl; e is 1 or 2; t and t' are each 1 or zero; X' is O, NH, N(alkyl)-, or N(aryl)-; Z is selected from straight- or branched-chain alkylene, and such alkylene substituted with phenyl, halogen, OSO_3M, alkoxy or aryloxy groups, $—CH_2(CH_2)_mV—CH_2(CH_2)_p—$, where m is 1, 2 or 3, p is 0, 1, 2 or 3, and V is O, S, SO_2, $—SO_2NH—$, $—SO_2N(alkyl)-$, $—SO_2N(aryl)$, $—N(SO_2 aryl)-$, —NH, —NHCO—, —NHCONH, $—N(SO_2 alkyl)$, or —CON(alkyl); M is H, Na, K or NH_4; n is 1 or 2; and wherein each of the above alkyl and alkoxy groups contain from 0 to three of the following: hydroxy; halogen; cyano; succinimido; glutarimido; phthalimido; 2-pyrrolidono; cyclohexyl; phenyl or phenyl substituted with alkyl, alkoxy, halogen, alkanoylamino, cyano or alkoxycarbonyl; alkanoylamino; sulfamoyl; alkylsulfamoyl; vinylsulfonyl; acrylamido; phthalimidinyl; benzoylsulfonicimidyl; alkylsulfonamido; phenylsulfonamido; alkoxycarbonylamino; alkylcarbamoyloxy; alkoxycarbonyl; alkoxycarbonyloxy;

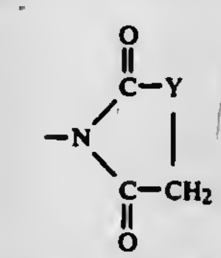

wherein Y is —NH—, —NH-alkyl-, —O—, —S—, or $—CH_2O—$; $—S—R^6$, wherein R^6 is alkyl, phenyl, phenyl substituted with halogen, alkyl, alkoxy, alkanoylamino, cyano, or alkoxycarbonyl, pyridyl, pyrimidinyl, benzoxazolyl, benzimidazolyl, benzothiazolyl, or

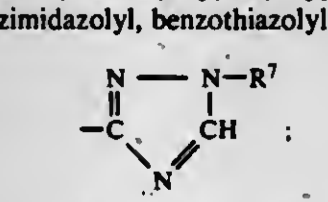

$—SO_2R^3$; $—COOR^3$; $—OXR^3$; $—NH—X—R^3$; $—X—R^3$; $—SO_2NR^7R^7$; wherein R^3 and X are as defined above and each R^7 is selected from H and R^3; alkoxy, alkoxy substituted with hydroxy, cyano, alkanoyloxy, or alkoxy; phenoxy; or phenoxy substituted with one or more of alkyl, alkoxy or halogen.

4,301,072

PROCESS FOR PREPARING AMINOPENICILLINS

Reinhold H. W. Bender, Kenoett Square, Pa., assignor to American Home Products Corporation, New York, N.Y.

Division of Ser. No. 31,890, Apr. 20, 1979, Pat. No. 4,231,954. This application Jan. 21, 1980, Ser. No. 113,925

Int. Cl.^{3} C07D *499/12;* **C07C** *102/04, 103/375*

U.S. Cl. 260—239.1 **3 Claims**

1. A process for preparing an α-amino-penicillin having the formula:

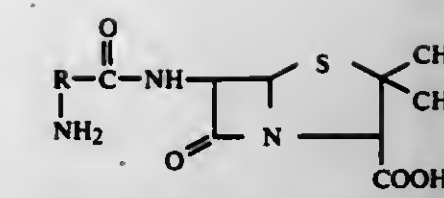

wherein R is a group having the formula:

$$R_3—\overset{R_2}{\overset{|}{C}}—$$

wherein R_2 is hydrogen and R_3 phenyl or substituted phenyl and physiologically acceptable salts thereof, which comprises reacting a silylated 6-amino-penicillanic acid, prepared by reacting 6-amino-penicillanic acid in a dry, inert water-insoluble solvent with a dihalodialkylsilane, at a temperature at or below −20° C. with at least 0.8 equivalents of a mixed anhydride prepared by reacting an amide-type Dane salt having the formula:

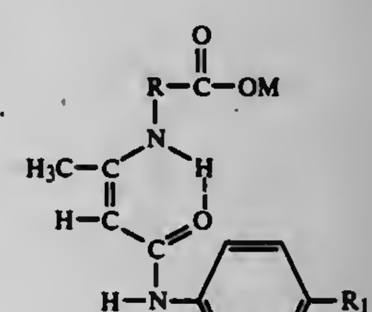

wherein R is as defined hereinbefore and R_1 is cyano or nitro and M is an alkali metal or a trioweralkylamine, with an alkylchlorocarbonate, in the presence of a catalyst, in methylene chloride containing as cosolvent at least 10% by volume of dimethylacetamide having a water content of 4–5%, to yield an N-protected aminopenicillin, hydrolyzing the N-protected aminopenicillin to yield an α-aminopenicillin and a β-ketoamide, and recovering the α-aminopenicillin and the β-ketoamide.

4,301,073

PURIFICATION OF CAPROLACTAM

Hugo Fuchs; Otto-Alfred Grosskinsky; Elmar Frömmer, all of Ludwigshafen, and Klaus Kartte, Beindersheim, all of Fed. Rep. of Germany, assignors to BASF Aktiengesellschaft, Fed. Rep. of Germany

Filed Jun. 17, 1980, Ser. No. 160,308

Claims priority, application Fed. Rep. of Germany, Jun. 29, 1979, 2926279

Int. Cl.^{3} C07D *201/16*

U.S. Cl. 260—239.3 A **4 Claims**

1. In a process for purifying caprolactam which has been obtained by a Beckmann rearrangement wherein the crude caprolactam obtained in the rearrangement is extracted with solvents, the solvents are distilled in the presence of an alkali and pure caprolactam is isolated, the improvement which comprises: treating the distillation residue by distilling off caprolactam from the alkaline residue in a first stage at a bottom temperature of 130°-160° C. and recycling the caprolactam obtained to the distillation stage, distilling the residue thus obtained in a second stage at a bottom temperature of 140°-180° C., treating the distillate with strongly acidic agents in a third stage, and recycling the treated distillate to the extraction stage.

4,301,074
6-(1'-HYDROXYETHYL)-2-SUBSTITUTED-PEN-2-EM-3-CARBOXYLIC ACID
Burton G. Christensen, Metuchen, and Frank P. DiNinno, Old Bridge, both of N.J., assignors to Merck & Co., Inc., Rahway, N.J.
Division of Ser. No. 948,711, Oct. 10, 1978, Pat. No. 4,260,618, which is a continuation-in-part of Ser. No. 852,275, Nov. 17, 1977, abandoned. This application Dec. 31, 1979, Ser. No. 108,885
Int. Cl.³ C07D *499/04*
U.S. Cl. 260—245.2 R **1 Claim**

1. A process for preparing a compound having the structure:

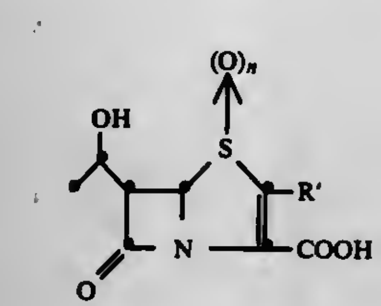

and the pharmaceutically acceptable salts thereof; wherein R' is hydrogen, —R, —OR, —SR, —NR_2; wherein R is substituted and unsubstituted: alkyl, having 1-6 carbon atoms, phenyl, phenylalkyl having 7-12 carbon atoms, heterocyclyl and heterocyclylalkyl wherein the alkyl has 1-3 carbon atoms and the heterocycle has 1-4 betero atoms selected from O, N, and S; and wherein the chain or nuclear substituent on R is selected from amino, mono-, di- and trialkylamino (each alkyl having 1-6 carbon atoms), hydroxyl, alkoxyl, having 1-6 carbon atoms, mercapto, alkylthio having 1-3 carbon atoms, phenylthio, sulfamoyl, amidino, guanidino, nitro, chloro, bromo, fluoro, cyano, and carboxyl; n is 0 or 1; when n=1, R' is not —SR; comprising the steps of
oxidizing:

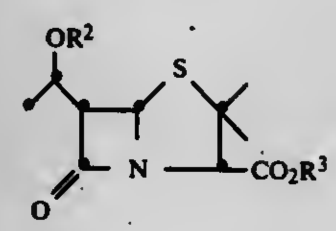

to form:

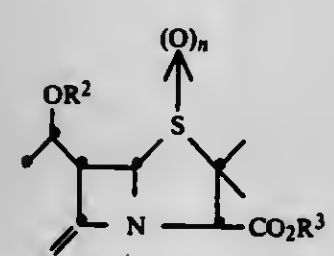

followed by treating with a phosphine in the presence of the anhydride $(R^3CO)_2O$ to form:

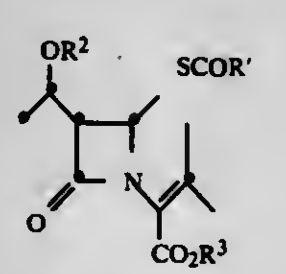

followed by oxidizing to form:

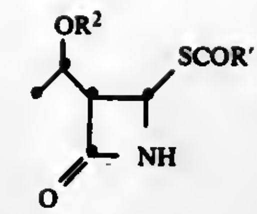

followed by treating with a glyoxalate ester to form:

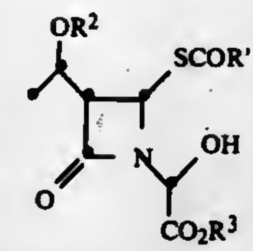

followed by halogenating to form:

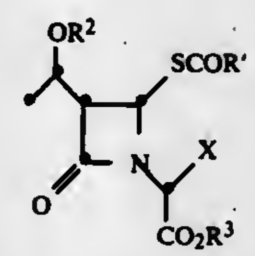

wherein X is halo; followed by treating with triphenylphosphine to form:

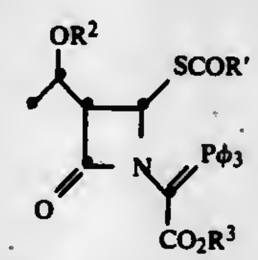

followed by cyclizing:

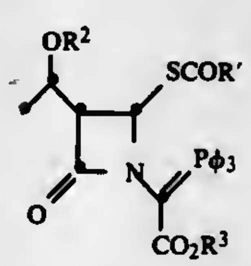

by heating, followed by deblocking; wherein R^2 is a readily removable protecting group; R^3 is a readily removable protecting group; and φ is phenyl.

4,301,075
N-SUBSTITUTED IMIDES AND BIS-IMIDES
Dieter Lohmann, Muttenz; Martin Roth, Marly, and Marcus Baumann, Basel, all of Switzerland, assignors to Ciba-Geigy Corporation, Ardsley, N.Y.
Filed Aug. 20, 1979, Ser. No. 67,863
Claims priority, application Switzerland, Aug. 30, 1978, 9153/78
Int. Cl.³ C07D *207/24*
U.S. Cl. 260—326.5 FM **5 Claims**

1. A compound of formula I

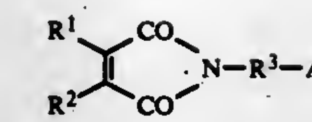

(I)

wherein A is a group —$C(R^4)$=$C(R^5)(R^6)$ or —≡C-R^5, R^1 and R^2 are each methyl, R^3 is a direct bond, straight-chain or branched-chain alkylene having 1-8 C atoms or cyclohexylene, R^4 and R^6 independently of one another are hydrogen, methyl or ethyl, and R^5 is hydrogen or alkyl having 1-9 C atoms.

4,301,076
ISOCHROMAN MUSK COMPOUNDS AND ORGANOLEPTIC USES THEREOF
Wilhelmus J. Wiegers, Red Bank; Mark A. Sprecker, Sea Bright; Hugh Watkins, Lincroft; Manfred H. Vock, Locust, and Frederick L. Schmitt, Holmdel, all of N.J., assignors to International Flavors & Fragrances Inc., New York, N.Y.
Division of Ser. No. 63,374, Aug. 3, 1979, Pat. No. 4,250,200. This application Nov. 13, 1980, Ser. No. 206,577
Int. Cl.³ C07D *311/78*
U.S. Cl. 260—345.2 **1 Claim**

1. A mixture of compounds having the structures:

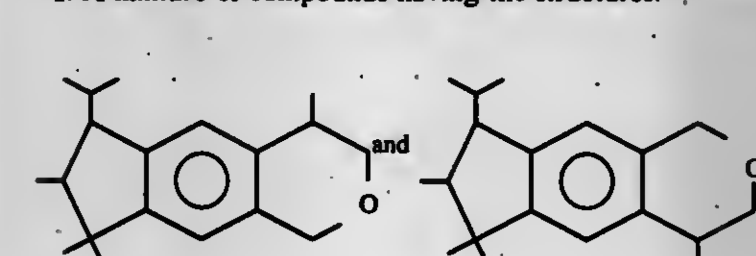

4,301,077
PROCESS FOR THE MANUFACTURE OF 1-4-BUTANEDIOL AND TETRAHYDROFURAN
Frederick A. Pesa, Aurora, and Anne M. Graham, Northfield, both of Ohio, assignors to Standard Oil Company, Cleveland, Ohio
Filed Dec. 22, 1980, Ser. No. 218,856
Int. Cl.³ C07C *27/04, 29/136;* C07D *307/08*
U.S. Cl. 260—346.11 **10 Claims**

1. A process for the manufacture of at least one of tetrahydrofuran and 1,4-butanediol from an oxygenated C_4 hydrocarbon selected from the group consisting of maleic anhydride, maleic acid, succinic anhydride, succinic acid, γ-butyrolactone and mixtures comprising at least two of these, the process comprising contacting the oxygenated C_4 hydrocarbon with hydrogen at a temperature of about 175° C. to about 275° C. and a pressure of about 750 psi to about 1500 psi in the presence of less than about 25 wt % water, based on the weight of the oxygenated hydrocarbon, and a catalyst of the formula

$$Ru_{0.01\text{-}2}M_{0.01\text{-}2}M'_{0.01\text{-}2}M''_{0.01\text{-}1}O_x$$

where
M is at least one of nickel and palladium,
M' is at least one of iron, cobalt, rhodium, osmium, iridium and platinum,
M'' is at least one of zinc and cadmium, and
x is a number sufficient to satisfy the valency requirements of the other elements present.

4,301,078
TRANS-4,5,13,14-TETRADEHYDRO-PGI₁ COMPOUNDS
Herman W. Smith, Kalamazoo Township, Kalamazoo County, Mich., assignor to The Upjohn Company, Kalamazoo, Mich.
Filed Aug. 3, 1977, Ser. No. 821,536
Int. Cl.³ C07D *307/935*
U.S. Cl. 260—346.22 **23 Claims**

1. A prostacyclin analog of the formula

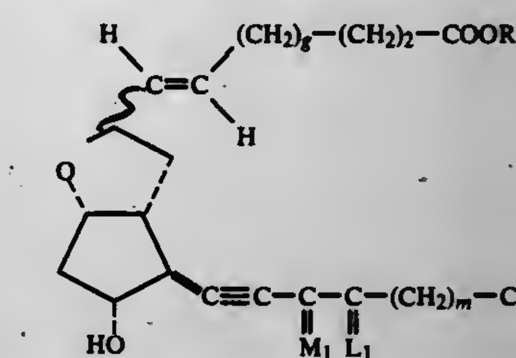

wherein g is the integer zero, one, or 2;
wherein M_1 is

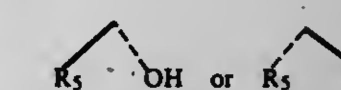

wherein R_5 is hydrogen or alkyl with one to 4 carbon atoms, inclusive,
wherein L_1 is

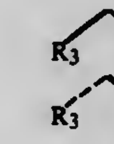

or a mixture of

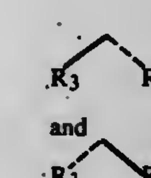

wherein R_3 and R_4 are hydrogen, methyl, or fluoro, being the same or different, with the proviso that one of R_3 and R_4 is fluoro only when the other is hydrogen or fluoro;
wherein R_1 is hydrogen; alkyl of one to 12 carbon atoms, inclusive; cycloalkyl of 3 to 10 carbon atoms, inclusive; aralkyl of 7 to 12 carbon atoms, inclusive; phenyl; phenyl substituted with one, two, or three chloro or alkyl of one to 3 carbon atoms; phenyl substituted in the para position by

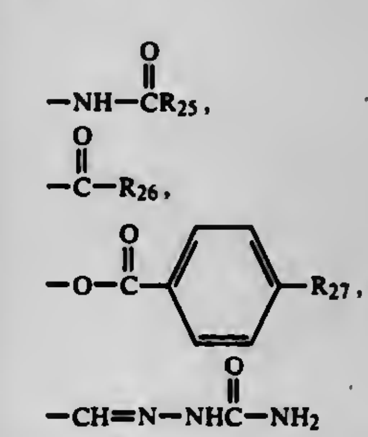

(a)
(b)
(c)
(d)

wherein R_{25} is methyl, phenyl, acetamidophenyl, benzamidophenyl, or —NH_2; R_{26} is methyl, phenyl, —NH_2, or methoxy; and R_{27} is hydrogen or acetamido; inclusive, phenacyl, i.e.,

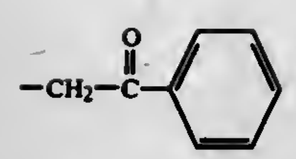

phenacyl substituted in the para position by chloro, bromo, phenyl, or benzamido; or a pharmacologically acceptable cation; and

wherein m is the integer one to 5, inclusive.

4,301,079

19-HYDROXY-19-METHYL-PGI$_1$ COMPOUNDS

John C. Sih, Kalamazoo, Mich., assignor to The Upjohn Company, Kalamazoo, Mich.

Division of Ser. No. 54,720, Jul. 5, 1979, Pat. No. 4,225,507. This application Mar. 3, 1980, Ser. No. 126,503

Int. Cl.^{3} C07D *307/935*

U.S. Cl. 260—346.22 **4 Claims**

1. A prostacyclin-type compound of the formula

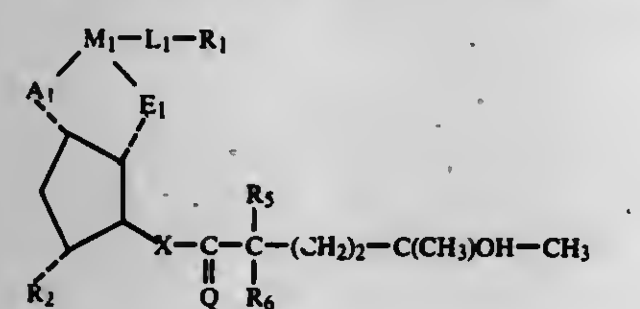

wherein A_1 is —O— (oxa) and E_1 is —CH_2

wherein L_1 is

(1) —$(CH_2)_n$—, wherein n is one to 5, inclusive;

(2) —$(CH_2)_p$—CF_2—, wherein p is 2, 3, or 4, or

(3) —CH_2—CH═CH—;

wherein M_1 is

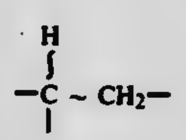

wherein Q is oxo, α-H:β-H, α-OH:β-R_4, or α-R_4:β-OH,

wherein R_4 is hydrogen or alkyl of one to 4 carbon atoms, inclusive,

wherein R_1 is

(1) —$COOR_3$,

(2) —CH_2OH,

(3) —$CH_2N(R_7)(R_8)$,

(4) —CO—$N(R_7)(R_8)$,

(5) —CO—NH—SO_2—R_{15}, or

(6) tetrazolyl,

wherein R_3 is

(a) hydrogen,

(b) alkyl of one to 12 carbon atoms, inclusive,

(c) cycloalkyl of 3 to 10 carbon atoms, inclusive,

(d) aralkyl of 7 to 12 carbon atoms, inclusive,

(e) phenyl,

(f) phenyl substituted with one, 2, or 3 chloro or alkyl groups of one to 3 carbon atoms, inclusive;

(g) —(p-Ph)—CO—CH_3,

(h) —(p-Ph)—NH—CO—(p-Ph)—NH—CO—CH_3,

(i) —(p-Ph)—NH—CO—(Ph),

(j) —(p-Ph)—NH—CO—CH_3,

(k) —(p-Ph)—NH—CO—NH_2,

(l) —(p-Ph)—CH═N—NH—CO—NH_2,

(m) β-napthyl,

(n) —CH_2—CO—R_{16},

wherein —(p-Ph)— is para-phenylene and —(Ph) is phenyl;

wherein R_{16} is phenyl, p-bromophenyl, p-biphenyl, p-nitrophenyl, p-benzamidophenyl, or 2-napthyl, or

(o) a pharmacologically acceptable cation; wherein R_7 and R_8 are hydrogen, alkyl of one to 12 carbon atoms, inclusive, benzyl, or phenyl, being the same or different, and wherein R_{15} is hydrogen, alkyl of one to 12 carbon atoms, inclusive, phenyl, phenyl-substituted with one, 2, or 3 chloro or alkyl groups of one to 3 carbon atoms, inclusive, or phenyl substituted with hydroxycarbonyl or alkoxycarbonyl of one to 4 carbon atoms, inclusive,

wherein R_2 is hydrogen, hydroxyl, or hydroxymethyl,

wherein R_5 and R_6 are hydrogen, alkyl of one to 4 carbon atoms, inclusive, or fluoro, being the same or different, with the proviso that one of R_5 and R_6 is fluoro only when the other is hydrogen or fluoro, and

wherein X is

(1) trans—CH═CH—,

(2) cis-CH═CH—,

(3) —C≡C—, or

(4) —CH_2CH_2—;

with the proviso that when L_1 is —$(CH_2)_n$— and R_1 is other than —$CH_2NR_7R_8$ or —$CONHSO_2R_{15}$, one of R_5 and R_6 is other than hydrogen.

4,301,080

6/7-HALOGENOANTHRAQUINONE COMPOUNDS, AND THE PRODUCTION AND USE THEREOF

Jean-Marie Adam, St. Louis, France, assignor to Ciba-Geigy Corporation, Ardsley, N.Y.

Continuation of Ser. No. 28,145, Apr. 9, 1979, abandoned. This application Oct. 8, 1980, Ser. No. 195,266

Claims priority, application Switzerland, Apr. 21, 1978, 4328/78

Int. Cl.^{3} C07C *143/665*

U.S. Cl. 260—371 **6 Claims**

1. A process for producing monosulfonated 6/7-halogenoanthraquinone compounds or mixtures thereof of the formula (I)

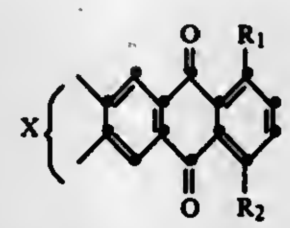

(I)

wherein X is a halogen atom which is in the 6- or 7-position of the anthraquinone molecule, R_1 is a phenylalkylamino group wherein the phenyl group thereof contains a -SO_3H group and can be further substituted, and R_2 is a -NH-phenyl group wherein the phenyl group thereof is unsubstituted or is mono- or polysubstituted by C_1–C_4 lower alkyl, C_1–C_4 lower alkoxy, acylamino or cyclohexyl, which process comprises

(a) reacting a compound or a mixture of such compounds of the formula III

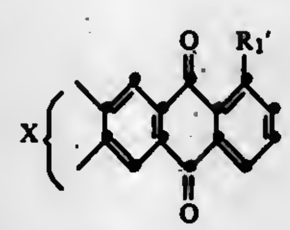

(III)

wherein R_1' corresponds to R_1 but is free from said -SO_3H group, with a halogen to yield an anthraquinone compound, or a mixture of such compounds, of the formula II

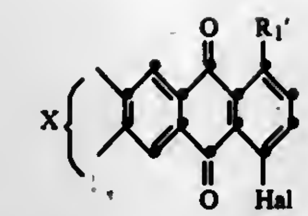

(II)

in which X and R_1' are as defined above, and "Hal" is a halogen atom,

(b) reacting this compound or mixture of compounds of the formula II by condensation with a phenylamine, thereby introducing the radical R_2, and

(c) sulfonating the resulting compound or mixtrue of compounds in the phenyl nucleus of R_1' at a temperature of 0°–30° C. with oleum containing 1–10% of free SO_3 or with 95–100% H_2SO_4 to obtain the monosulfonated compound or mixture of compounds of the formula I.

4,301,081

ALKALI METAL COMPLEX COMPOUNDS

Borislav Bogdanovic, Mülheim an der Ruhr, Fed. Rep. of Germany, assignor to Studiengesellschaft Kohle mbH, Mülheim an der Ruhr, Fed. Rep. of Germany

Division of Ser. No. 905,489, May 12, 1978, Pat. No. 4,229,354. This application Jan. 28, 1980, Ser. No. 115,595.

Claims priority, application Fed. Rep. of Germany, May 17, 1977, 2722221

Int. Cl.^{3} C07D *307/06*

U.S. Cl. 260—347.2 **10 Claims**

1. An alkali metal complex compound of general formula

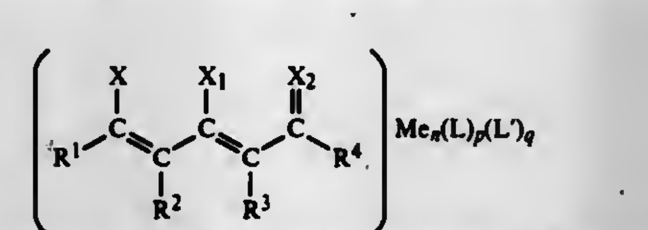

I

wherein Me represents an alkali metal, each X represents sulphur or oxygen, with the proviso that (1) all three X atoms are sulfur, (2) all three X atoms are oxygen or (3) X and X_1 are sulfur and X_2 is oxygen, n represents a whole number from 3 to 20, L and L' represents a mono- or polyfunctional ether or amine, respectively, p and q are whole numbers from 0 to 4, R^1, R^2, R^3, R^4 are each hydrogen, alkyl, cycloalkyl, aralkyl or aryl moieties and/or two or more such moieties closed to form an aliphatic or aromatic ring system.

4,301,082

ANTHRAQUINONE COMPOUNDS

Jean-Marie Adam, St. Louis, France, assignor to Ciba-Geigy Corporation, Ardsley, N.Y.

Continuation of Ser. No. 958,930, Nov. 8, 1978, abandoned. This application Feb. 20, 1980, Ser. No. 122,927

Claims priority, application Luxembourg, Nov. 14, 1977, 78509

Int. Cl.^{3} C07C *143/665*

U.S. Cl. 260—373 **13 Claims**

1. A new anthraquinone compound which, in the form of the free acid, corresponds to the formula I

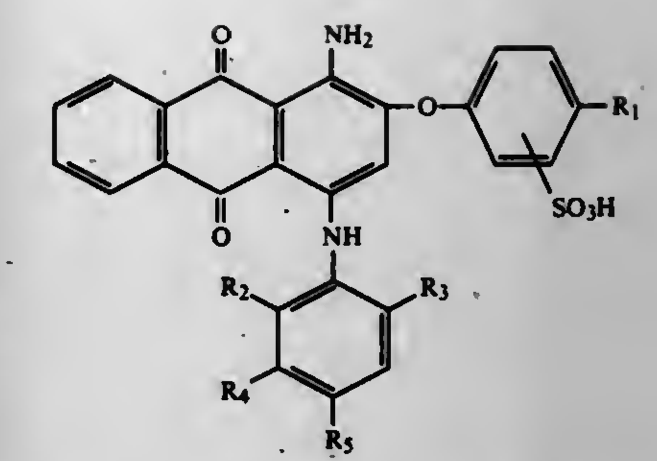

(I)

in which R_1 is a straight-chain or branched-chain alkylgroup having 4 to 8 carbon atoms, R_2 and R_3 independently of one another are each a straight-chain or branched-chain alkyl group having 1 4 carbon atoms, R_4 is hydrogen, an optionally acylated amino grup or a fiber-reactive radical bound by way of an amino group, and R_5 is hydrogen, or a straight-chain or branched-chain alkyl group having 1 to 4 carbon atoms.

4,301,083

PREPARATION OF ETHERIFIED POLYOXYALKYLENE DERIVATIVES

Noriaki Yoshimura, and Masuhiko Tamura, both of Kurashiki, Japan, assignors to Kuraray Co., Ltd., Kurashiki, Japan

Continuation of Ser. No. 867,621, Jan. 6, 1978, abandoned. This application Jan. 2, 1980, Ser. No. 109,065

Claims priority, application Japan, Apr. 4, 1977, 52-38781; Apr. 25, 1977, 52-48900

Int. Cl.^{3} C07C *41/00;* **C09F** *5/00*

U.S. Cl. 260—404 **35 Claims**

1. A process for preparing an etherified polyoxyalkylene derivative having the structural formula:

$$Q(CH_2CH_2O)_m(\overset{CH_3}{\overset{|}{C}}HCH_2O)_nCH_2R \qquad [I]$$

wherein m and n are zero or numbers greater than zero, m and n not being both zero, such that m+n≧4; Q is a member selected from the group consisting of —OCH_2R, —OR^1, —$N(CH_2R)R^2$, —$N(CH_2R)COR^2$, —NR^2R^3, —$N(R^3)COR^2$,

$$—N(R^2)[(CH_2CH_2O)_p(\overset{CH_3}{\overset{|}{C}}HCH_2O)_qCH_2R] \text{ and}$$

$$—N(COR^2)[(CH_2CH_2O)_p(\overset{CH_3}{\overset{|}{C}}HCH_2O)_qCH_2R];$$

R is hydrogen or —$CR^4R^5R^6$; R^1, R^2 and R^3 are the same or different and are each a hydrocarbon; R^4, R^5 and R^6 are each hydrogen or a hydrocarbon; and p and q are each zero or numbers greater than zero such that p+q>0, which process consists essentially of reacting in a single step a polyoxyalkylene compound having the structural formula:

$$Q'(CH_2CH_2O)_m(\overset{CH_3}{\overset{|}{C}}HCH_2O)_nH \qquad [II]$$

wherein Q' is Q as defined above or a member selected from —OH, —NHR^2, —$NHCOR^2$,

$$—N(R^2)[(CH_2CH_2O)_p(\overset{CH_3}{\overset{|}{C}}HCH_2O)_qH] \text{ and}$$

-continued

$$-N(COR^2)[(CH_2CH_2O)_p(\overset{\displaystyle CH_3}{\overset{|}{C}}HCH_2O)_qH];$$

and m, n, R^2, p and q are as previously defined, with an organic halide having the structural formula:

$$R-CH_2-X \qquad [III]$$

wherein X is chlorine or bromine atom and R is as previously defined, in the presence of an aqueous solution of sodium or potassium hydroxide having an initial alkali metal hydroxide concentration of from about 30% to about 75% by weight, and at a molar ratio of the said organic halide to hydroxyl content of the said polyoxyalkylene compound of at least 1.2 and at a molar ratio of the said alkali metal hydroxide to hydroxyl content of the said polyoxyalkylene compound of at least 1.

4,301,084

PROCESS FOR THE PREPARATION OF CARBOXYLIC ACID ESTERS OF β-FORMYL-CROTYL ALCOHOL BY AN ALLYL REARRANGEMENT

Harald Laas, Maxdorf; Axel Nissen, Leimen, and Bernd Meissner, Heidelberg, all of Fed. Rep. of Germany, assignors to BASF Aktiengesellschaft, Fed. Rep. of Germany

Filed Aug. 31, 1979, Ser. No. 71,478
Int. Cl.³ C07C *67/293, 67/297, 69/007, 69/145*
U.S. Cl. 260—405.6 **3 Claims**

1. In a process for the preparation of a carboxylic acid ester of β-formyl-crotyl alcohol by rearrangement of the corresponding carboxylic acid ester of 2-formyl-2-hydroxy-but-3-ene or of an acetal or acylate thereof in the presence of copper or a copper compound at from 50° to 250° C. followed, where relevant, by hydrolytic cleavage of the acetal or acylate, the improvement wherein

(a) the rearrangement is carried out in the presence of copper (I) chloride as the catalyst and

(b) the low-boiling by-products formed during the rearrangement are continuously removed from the reaction mixture.

4,301,085

PROCESS FOR THE PRODUCTION OF METHYL-ALKYL TIN DICHLORIDES

Wolfgang Wehner, Zwingenberg, and Hans-Günter Köstler, Heppenheim/Bergstrasse, both of Fed. Rep. of Germany, assignors to Ciba-Geigy Corporation, Ardsley, N.Y.

Filed Apr. 14, 1980, Ser. No. 140,404
Claims priority, application Switzerland, Apr. 19, 1979, 3688/79
Int. Cl.³ C07F *7/22*
U.S. Cl. 260—429.7 **12 Claims**

1. A process for the production of a compound of the formula I

$$CH_3(R)SnCl_2 \qquad (I)$$

wherein R is C_4–C_{20}alkyl, which process comprises reacting dimethyl tin dichloride and R—Cl, wherein R has the above meaning, in the presence of a catalyst of the formula II

$$R'(R'')_3M^{\oplus}X^{\ominus} \qquad (II)$$

wherein R' is C_1–C_{20}alkyl which is unsubstituted or substituted by C_1–C_4alkoxy, or is C_7–C_{20}aralkyl, the aryl moiety of which can be substituted by halogen or C_1–C_4alkoxy, R'' can be identical or different radicals selected from the group R' or is phenyl which is unsubstituted or substituted by C_1–C_4alkyl, C_1–C_4alkoxy or halogen, $M^{\oplus}$ is a cation N, P or Sb, and X is an anion selected from the group consisting of CH_3—$SnCl_4$, $(CH_3)_2SnCl_3$, $SnCl_5$ or $SbCl_4$.

4,301,086

BIMETALLIC CLUSTERS OF RUTHENIUM WITH COPPER, SILVER AND GOLD

Roy L. Pruett, New Providence, and John S. Bradley, Scotch Plains, both of N.J., assignors to Exxon Research & Engineering Co., Florham Park, N.J.

Filed Mar. 31, 1980, Ser. No. 135,998
Int. Cl.³ C07F *1/08*
U.S. Cl. 260—438.1 **7 Claims**

1. A composition of matter comprising a bimetallic cluster compound of the formula

$$L_2M_2Ru_6C(CO)_{16}$$

where L is RCN, R being C_1 to C_6 alkyl, C_6 to C_{10} aralkyl or phenyl and M is copper, silver or gold.

4,301,087

MANUFACTURE OF CARBAMATES FROM CYANOGEN

Janice L. Greene, Chagrin Falls, Ohio, assignor to Standard Oil Company, Cleveland, Ohio

Filed Aug. 18, 1980, Ser. No. 179,148
Int. Cl.³ C07C *125/04, 119/18, 119/20, 68/00*
U.S. Cl. 260—463 **11 Claims**

1. A process for the manufacture of a carbamate of the formula

$$R\text{+}O-\underset{\underset{\displaystyle O}{\|}}{C}-NH_2)_n$$

the process comprising contacting an alcohol of the formula

$$R-OH)_n \qquad (II)$$

with cyanogen and water in the presence of a dipolar, aprotic solvent and an acid catalyst, where R is an aliphatic, alicyclic or aryl radical and n is a positive integer.

2. A process for the manufacture of an imidocarbonate of the formula

$$R-O-\overset{\overset{\displaystyle NH}{\|}}{C}-O-R \qquad (III)$$

the process comprising contacting an alcohol of the formula

$$R-OH \qquad (IV)$$

with cyanogen in the presence of a dipolar, aprotic solvent and an acid catalyst, where R is an aliphatic, alicyclic or aryl radical.

11. A process for the manufacture of a carbonate of the formula

$$R-O-\overset{\overset{\displaystyle O}{\|}}{C}-O-R \qquad (V)$$

the process comprising

(A) contacting an alcohol of the formula

$$R-OH \qquad (IV)$$

with cyanogen in the presence of a dipolar, aprotic solvent and an acid catalyst to form an imidocarbonate of the formula

$$R-O-\overset{\overset{\displaystyle NH}{\|}}{C}-O-R \qquad (III)$$

and

(B) contacting the imidocarbonate of (A) with water, where R is an aliphatic, alicyclic or aryl radical.

4,301,088

METHOD OF PREPARING BENZYL ALCOHOLS BY DECARBONYLATION OF FORMIC ACID ESTERS

Günther Bernhardt, St. Augustin, Fed. Rep. of Germany, assignor to Dynamit Nobel AG, Troisdorf, Fed. Rep. of Germany

Filed Jun. 6, 1979, Ser. No. 46,081
Claims priority, application Fed. Rep. of Germany, Jun. 9, 1978, 2825362
Int. Cl.³ C07C *41/18, 29/00*
U.S. Cl. 260—465 F **32 Claims**

1. A method for preparing a benzyl alcohol or ring-substituted benzyl alcohol which comprises decarbonylating a formic acid ester of the corresponding benzyl alcohol in the presence of 0.01 to 15 mol percent of a strong base as catalyst by heating at a temperature sufficient to effect carbon monoxide evolution said formic acid ester in the presence of said strong base in a reaction mixture consisting essentially of said formic acid ester and said catalyst, the process being carried out either in the melt or in the presence of a solvent, the solvent being a tertiary alcohol or an alcohol corresponding to the formic acid ester reactant, the decarbonylation being carried out at a temperature at which the formic acid ester employed and the resulting alcohol are in fluid form.

4,301,089

PROCESS FOR THE HYDROFORMYLATION OF OLEFINICALLY UNSATURATED COMPOUNDS

Frederick A. Pesa, Aurora, and Thomas A. Haase, University Hts., both of Ohio, assignors to Standard Oil Company, Cleveland, Ohio

Division of Ser. No. 104,644, Dec. 17, 1979. This application Jul. 28, 1980, Ser. No. 172,586
Int. Cl.³ C07C *45/49, 120/00, 121/34*
U.S. Cl. 260—465.1 **6 Claims**

1. A process for the production of an aldehyde comprising contacting an olefinically unsaturated compound, carbon monoxide and hydrogen at a reaction temperature of about 50° C. to about 150° C. and pressure of about 100 psi to about 2500 psi in the presence of a catalyst comprising cobalt carbonyl and a porphyrin promoter ligand represented by the formula:

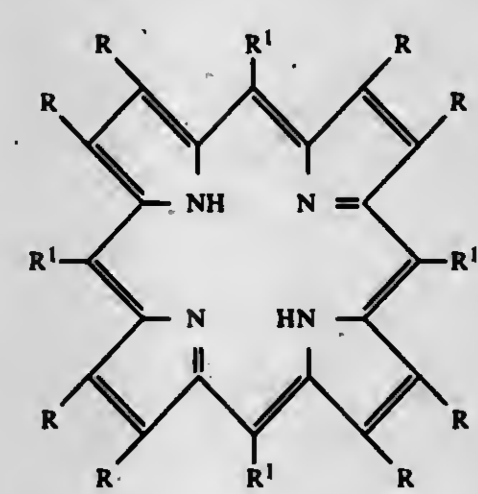

wherein each R can be independently selected from the group consisting of:

(1) H;

(2) C_{1-8} alkyl;

(3) —$(CH_2)_y$—COOT, wherein y is 1–4 and T is H or a C_{1-4} alkyl;

(4) C_{1-8} alcohol radical;

(5) C_{1-8} alkene radical;

wherein each R^1 can be independently selected from the group consisting of:

(1) H;

(2) phenyl;

(3) substituted phenyl substituted with one or more carboxy groups or C_{1-4} alkyl groups or mixtures thereof;

wherein the olefinically unsaturated compound is represented by the following formula:

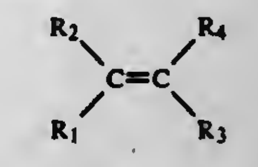

wherein R_1, R_2, R_3 and R_4 are each independently selected from the group consisting of:

(1) H;

(2) C_{1-10} alkyls;

(3—$(CH_2)_p$—CN, wherein p is 0–3; and

(4) —$(CH_2)_q$—OH, wherein q is 1–10;

wherein the molar ratio of the cobalt carbonyl to the porphyrin promoter is in the range of about 0.1:1 to about 20:1 and wherein the ratio of hydrogen to carbon monoxide is in the range of about 0.5:1 to about 10:1.

4,301,090

CARBONYLATION OF OLEFINICALLY UNSATURATED COMPOUNDS

Frederick A. Pesa, Aurora, and Thomas A. Haase, Twinsburg, both of Ohio, assignors to Standard Oil Company, Cleveland, Ohio

Division of Ser. No. 955,861, Oct. 30, 1978, Pat. No. 4,235,744. This application Aug. 13, 1979, Ser. No. 66,146
Int. Cl.³ C07C *120/00, 121/417, 121/16*
U.S. Cl. 260—465.4 **12 Claims**

1. A process for the production of predominantly branched chain esters and amides in the liquid phase comprising contacting acrylonitrile with carbon monoxide and a compound containing a replaceable hydrogen atom represented by the formula H–Y

wherein Y is selected from the group consisting of:

(1) OR_5 wherein R_5 is a C_{1-30} alkyl; and

(2)

$$\overset{\displaystyle R_6}{\overset{|}{N}}-R_7;$$

wherein R_6 and R_7 are each independently selected from C_{1-10} alkyls;

in the presence of H_2 in an amount less than 10% by volume of total H_2 and carbon monoxide present, and in the presence of a catalyst comprising a polyamine promoter ligand and at least one of cobalt carbonyl and ruthenium carbonyl, said polyamine promoter ligand being selected from the group consisting of alkyl-substituted and unsubstituted alkylenediamines, methyl-substituted and unsubstituted phenylenediamines, diazobicyclo (2.2.2) octane and polyvinylpyrrolidone, and wherein the process is conducted at a temperature of about 50° C. to 150° C. and a pressure of between about 100 and 2500 psi, and wherein the molar ratio of HY to said olefinically unsaturated compound is about 0.5–100:1.

4,301,091

FLUORESCENT DYESTUFFS

Rudolf Schleder, Huerth; Helmut Telle, Cologne; Roderich Raue, Leverkusen, and Wolfgang Brinkwerth, Bergisch-Gladbach, all of Fed. Rep. of Germany, assignors to Bayer Aktiengesellschaft, Leverkusen, Fed. Rep. of Germany

Filed Sep. 10, 1979, Ser. No. 73,773
Claims priority, application Fed. Rep. of Germany, Sep. 23, 1978, 2841519
Int. Cl.³ C07C *143/24;* **D06P** *1/38*
U.S. Cl. 260—505 R **4 Claims**

1. Fluorescent dyestuffs of the formula

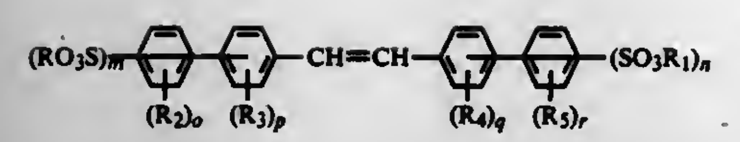

wherein

R and R_1 independently of one another represent hydrogen, a salt-forming cation, an alkyl radical with 1 to 8 carbon atoms or an aralkyl radical which is optionally substituted by non-chromophoric groups,

R_2 to R_5 independently of one another represent hydrogen, alkyl, trifluoromethyl, alkoxy, aralkoxy, alkenyloxy, halogen, the carboxyl, cyano, alkylsulphonyl, arylsulphonyl, carboxamide or sulphonamide group or a carboxylic acid ester group, m and n independently of one another denote 0, 1 or 2 and the sum of m+n must be at least 2, and o, p, q and r independently of one another represent 0, 1 or 2.

4,301,092

PREPARATION OF OXALYL CHLORIDE

Andre Acloque; Jean-Claude Lanet, both of Saint-Auban, and Yves Correia, Chateau Arnoux, all of France, assignors to Rhone-Poulenc Industries, Paris, France

Continuation of Ser. No. 22,055, Mar. 19, 1979, abandoned. This application Oct. 15, 1979, Ser. No. 85,104

Claims priority, application France, Mar. 17, 1978, 78 07740

Int. Cl.^{3} C07C *51/58*

U.S. Cl. 260—544 Y **14 Claims**

1. A process for the preparation of oxalyl chloride comprising:

(i) esterifying ethylene glycol with trichloroacetyl chloride, in the absence of any reaction solvent other than trichloroacetyl chloride, to afford ethylene glycol bis-trichloroacetate, the reaction mixture for the esterification consisting essentially of ethylene glycol, trichloroacetyl chloride and the reaction products thereof, and the hydrochloric acid produced during the esterification being removed from the reaction mixture by distillation;

(ii) photochemically chlorinating the resulting ethylene glycol bis-trichloroacetate, at a temperature of from about 50° to 200° C., to afford tetrachloroethylene glycol bis-trichloroacetate;

(iii) decomposing the resulting tetrachloroethylene glycol bis-trichloroacetate, at a temperature of from about 50° to 160° C., in the presence of trichloroacetyl chloride as the sole reaction solvent, and in the presence of a decomposition catalyst, to afford oxalyl chloride and trichloroacetyl chloride; and

(iv) separating the resulting oxalyl chloride.

4,301,093

ATOMIZER FOR LIQUID

Walter Eck, Munich, Fed. Rep. of Germany, assignor to Bosch Siemens Hausgerate GmbH, Stuttgart, Fed. Rep. of Germany

Continuation of Ser. No. 20,707, Mar. 15, 1979, abandoned. This application Jul. 25, 1980, Ser. No. 171,425

Claims priority, application Fed. Rep. of Germany, Mar. 15, 1978, 2811248

Int. Cl.^{3} B05B *17/06;* **A61M** *11/00*

U.S. Cl. 261—1 **8 Claims**

1. An atomizer for liquids comprising a vibration generator for generating vibrations, an atomizer element to which the vibrations are transmitted, said atomizer element having a surface onto which liquid is fed and from which surface atomized liquid is released, a container for holding a body of liquid below the atomizer element, a housing supporting the vibration generator, the atomizer element, and the container, a rod-shaped wick of elastically resilient material in contact with the body of liquid in the container to cause the liquid to move upwardly along the wick, means for elastically pressing the wick against said surface at a point remote from the body of liquid in the container to cause liquid from the wick to discharge directly onto said surface, said wick alone feeding liquid from the container directly to the atomizer element.

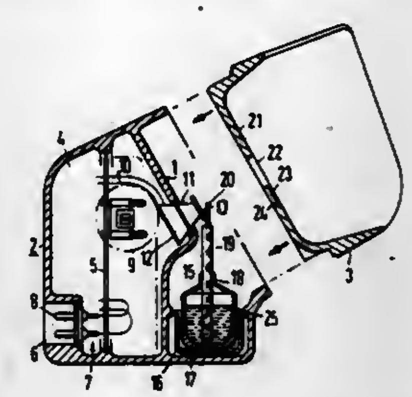

4,301,094

EVAPORATION AIR HUMIDIFIER

Heinz G. Baus, Ulmenweg 46, CH-3601 Thun, Switzerland

Filed Aug. 22, 1979, Ser. No. 68,551

Claims priority, application Fed. Rep. of Germany, Aug. 24, 1978, 2836932

Int. Cl.^{3} F24F *6/04*

U.S. Cl. 261—29 **9 Claims**

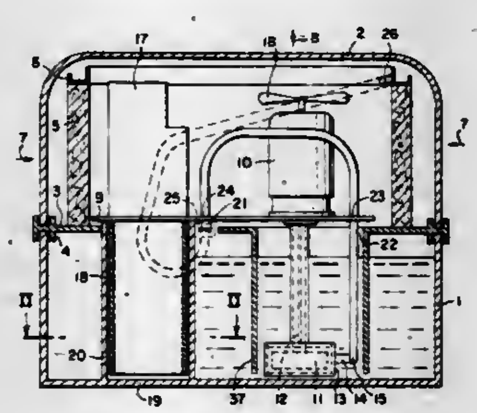

1. Evaporation air humidifier having a water supply container with a filter support plate carrying an evaporation filter, and having a removable auxiliary plate whereon electrical components are assembled including a motor and a pump driven thereby and extending into the water supply container, as well as a fan blade disposed on an upper side of the motor, and an installation housing, and further having a connecting hose interconnecting the pump and the evaporation filter and a dome with air inlet and outlet openings, the air humidifier comprising a guide member carried by the auxiliary plate at the underside thereof, a guide secured to the water supply container and engageable with said guide member, a first coupling member for the connecting hose carried by the auxiliary plate, a second coupling member held by the filter support plate, said first coupling member being automatically couplable with said second coupling member when said guide member and said guide are mutually engaged.

4,301,095

AIR FRESHENER DISPENSER

Leo L. Mettler, Roseville, and Arthur L. Johnson, Sacramento, both of Calif., assignors to Product Enterprise, Inc., Sacramento, Calif.

Filed Aug. 18, 1980, Ser. No. 179,095

Int. Cl.^{3} B01F *3/04*

U.S. Cl. 261—30 **10 Claims**

1. An air freshener unit consisting of a box-like base, a motor carried by said base, an air propeller operatively connected to said motor for propulsion thereby, battery means electrically connected to said motor, feet mounted on the underside of a floor pan of said boxlike base to space the underside thereof away from a contact surface,

said floor pan having a series of vertically disposed apertures for the intake of air,

said base further including a separator to isolate said battery from said motor,

a cover for said base, engageable therewith to control the flow of air through the unit,

said cover having a series of radially extending air directing means mounted on the underside thereof,

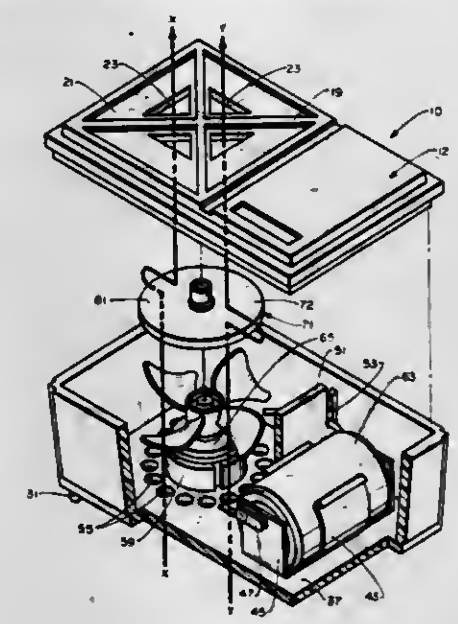

a refresher element removeably secureable to the underside of said cover, said element containing a volatilizeable liquid,

said cover including a plurality of openings therein for the egress of air whereby said motor when actuated, air is directed into said unit to impinge upon the underside of the element, around the periphery of said element over the top thereof, and to egress through said openings in said cover.

4,301,096

DEVICE FOR SUPPLYING FUEL TO AN INTERNAL COMBUSTION ENGINE

Gunther Bernecker, Montvale, N.J., assignor to G.M.C. Research, Inc., Orange, N.J.

Continuation-in-part of Ser. No. 841,872, Oct. 13, 1977, Pat. No. 4,164,525. This application Aug. 6, 1979, Ser. No. 64,298

The portion of the term of this patent subsequent to Aug. 14, 1996, has been disclaimed.

Int. Cl.^{3} F02M *29/02*

U.S. Cl. 261—41 B **3 Claims**

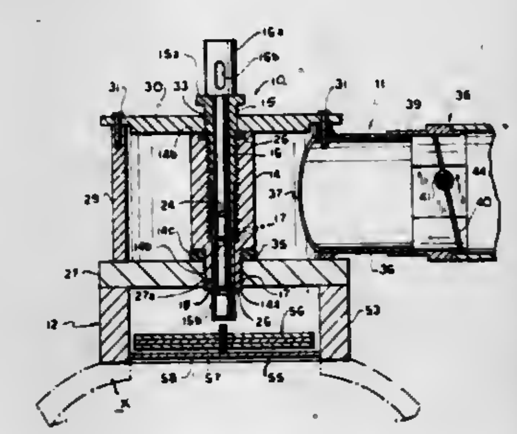

1. A carburetor for supplying a fuel/air mixture to an internal combustion engine having an intake manifold and equipped with a throttle, comprising fuel regulation means for controlling flow rate of the fuel in response to throttle movement and continuously feeding the fuel to the intake manifold, air admitting means for admitting air with the ejected fuel into the intake manifold, and fuel/air admixing means including a plurality of blades rotatable by suction resulting from operation of the engine, whereby the fuel and air passing through the fuel regulation means and the air admitting means respectively are atomizingly admixed and are fed to the engine through the intake manifold, said fuel regulation means comprising a shell, a tube received in the shell and a rod received in the tube with a sliding fit, a plurality of orifices in the tube at intervals along at least a portion of the length of the tube, the rod being insertable in the tube to an extent sufficient to block the orifices and retractable to an extent sufficient to leave the orifices unobstructed, the number of orifices left unobstructed increasing in proportion to the extent to which the rod is retracted, the rod including means for connection to a linkage from the throttle for effecting axial movement of the rod, an annular space defined between the exterior wall of the portion of the length of the tube having orifices and the portion of the length of the interior wall of the shell facing said orifices, and means defining passages for admitting liquid fuel into the annular space, whereby the fuel is ejected from the fuel regulation means solely through the annular space when the rod is inserted in the tube to an extent sufficient to block the orifices and some of the fuel also passes from the annular space through the orifices to the interior of the tube from whence the fuel is ejected when the rod is retracted to an extent sufficient to leave the orifices unobstructed, the volumetric flow rate of the fuel into and through the tube increasing as the number of orifices left unobstructed is increased by increasing the retraction of the rod.

4,301,097

METHOD FOR PROVIDING AUXILIARY COOLING AND AERATING OF LIQUIDS TO SUPPLEMENT OR REPLACE FIXED COOLING TOWERS

Harold D. Curtis, Rte. 2, Chickasha, Okla. 73018

Division of Ser. No. 66,926, Aug. 16, 1979, Pat. No. 4,267,130. This application Jun. 17, 1980, Ser. No. 160,376

Int. Cl.^{3} B01F *3/04*

U.S. Cl. 261—109 **10 Claims**

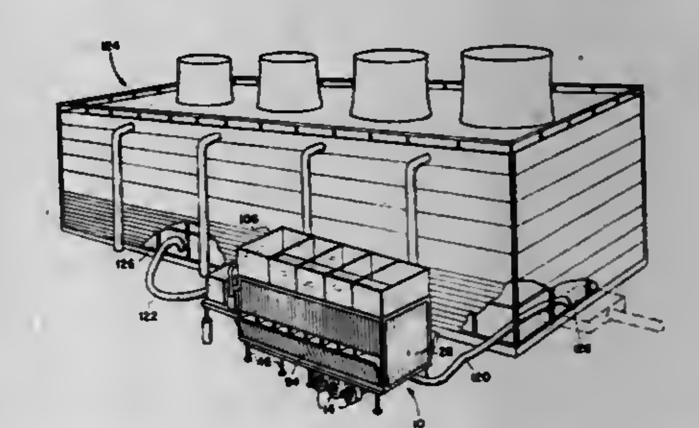

1. A method for providing high pressure auxiliary cooling and aerating of liquids to temporarily supplement or replace fixed cooling towers comprising the steps of:

(a) transporting a high pressure portable auxiliary cooling tower having framework supported by axially mounted wheels to the site of the fixed tower;

(b) positioning the auxiliary cooling tower adjacent the fixed tower;

(c) leveling the auxiliary cooling tower;

(d) connecting a liquid inlet port of the auxiliary tower to a liquid supply of the fixed tower;

(e) connecting a liquid outlet of the auxiliary tower to a cold-water sump of the fixed tower whereby said portable auxiliary cooling tower and said fixed cooling tower are connected in parallel; and

(f) pumping liquid out of the fixed tower through the auxiliary tower system and then back into the fixed tower cold-water sump while pulling outside air through a lower portion of the auxiliary cooling tower and expelling it out

of the top thereof intimately contacting said air with the liquid.

4,301,098
VAPOR LIQUID CONTACTING

Thomas W. Mix, 24 Atwood St., Wellesley, Mass.
Filed Jan. 30, 1980, Ser. No. 117,022
Int. Cl.[3] B01F *3/04*
U.S. Cl. 261—114 R 31 Claims

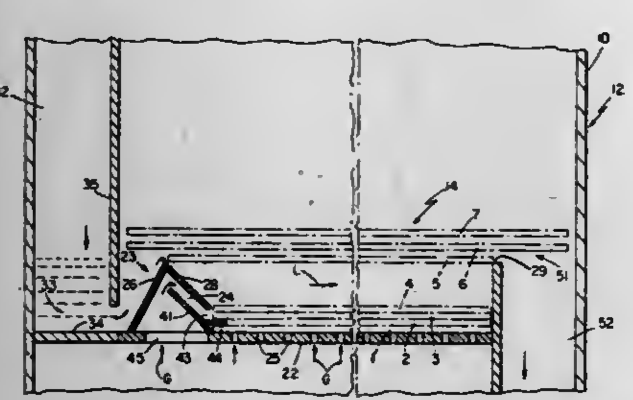

1. In vapor-liquid contact apparatus of the cross-flow type having a column bousing and at least one contact stage in said housing, said apparatus including liquid and vapor inlets to said stage, a liquid outlet from said stage, and an orificed tray mounted in said housing at said stage, means at said outlet defining a liquid retention zone on said tray, the predominant flow of vapor being along a first axis, the predominant flow of liquid through said zone being along a second axis transverse to said first axis, that improvement comprising

a porous matrix in said zone having a plurality of surfaces positioned above said tray to contact said liquid and said gas flowing through said zone,

said surfaces being spaced along and oriented obliquely to said first axis, and arranged in layers spaced along said second axis, said surfaces in successive layers being staggered relative to said first axis, said surfaces having a hydraulic mean diameter greater than one-half the diameter of said tray orifices, the projection of said surfaces on said tray having no open areas whose greatest dimension is more than three times the hydraulic mean diameter of the surfaces so that said surfaces deflect vapor and thereby dissipate vapor hole momentum and reduce vertical oscillations in the vapor-liquid dispersion on the tray.

18. In vapor-liquid contacting apparatus of the cross-flow type having a column housing and at least one contact stage in said housing, said apparatus including liquid and vapor inlets to said stage, and a liquid outlet from said stage, and an orificed tray mounted in said housing at said stage between said inlets, an improved inlet weir comprising

a liquid inlet providing momentum to said liquid in the direction of the liquid flow path,

a vapor inlet including means for mixing gas with said liquid, and giving said gas a predominant flow component in the direction of said liquid flow path, and

a deflection plate above and parallel to said tray and beneath the liquid after passage through its said inlet, so that the surface of said plate facing away from said tray deflects said liquid in a direction along said tray,

said vapor inlet means including an imperforate barrier sloping from above said tray downwardly toward said outlet, the upper surface of said barrier communicating with said liquid inlet to carry a stream of liquid downwardly toward said tray and said outlet, the undersurface of said barrier communiating with said vapor inlet, said imperforate barrier being spaced above said deflection plate to define therebetween a vapor entry zone onto said tray, said zone being the sole path of communication between said vapor inlet and said tray to thereby cause all vapor entering through said vapor inlet to impinge in a single layer on said stream of liquid from beneath and in the direction of said outlet.

28. A method for retrofitting a vapor-liquid contacting apparatus of the crossflow type having a column housing and at least one contact stage in said housing, said apparatus including liquid and vapor inlets to said stage, an outlet weir from said stage, and an orificed tray mounted in said housing at said stage, said method comprising the steps of:

replacing said outlet weir with a higher outlet weir capable of retaining increased froth height on said tray, and

providing means disposed above the tray to limit the increase in froth height to less than that increase which would otherwise accompany the increase in height of said outlet weir.

4,301,099
METHOD AND DEVICE FOR MANUFACTURING A PLASTICS RECORD CARRIER

Egbert Broeksema, and Arnoldus A. Smeets, both of Eindhoven, Netherlands, assignors to U.S. Philips Corporation, New York, N.Y.
Filed Dec. 13, 1979, Ser. No. 102,720
Claims priority, application Netherlands, Aug. 10, 1979, 7906117
Int. Cl.[3] B29D *17/00*
U.S. Cl. 264—25 3 Claims

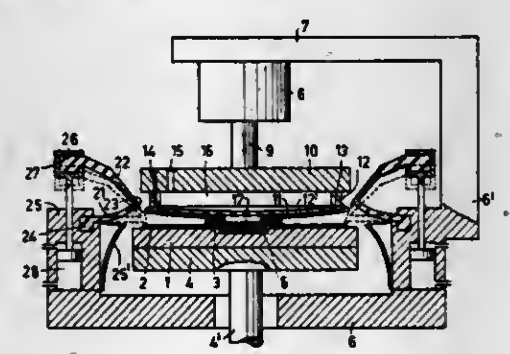

1. A method of manufacturing a record carrier having a stratified structure comprising the steps of introducing a liquid resin into a cavity formed in the centre of a mould, said mould having at least one data track formed in the surface thereof extending about said cavity, positioning a planar, flexible substrate opposite said surface of said mould, said substrate having a projection formed in the centre thereof configured to mate with said cavity, deforming said substrate into a convex form bulging toward said mould, moving said substrate toward said mould so that said projection enters said cavity and squeezes said resin in said cavity onto said surface of said mould, changing the configuration of said substrate from said convex to a planar form while pressing said substrate against said resin so that said resin is rolled out over said surface of said mould, and curing said resin so that it adheres to said substrate to form said stratified structure.

4,301,100
METHOD AND APPARATUS FOR SETTING A CLAMPING LOAD

Robert E. Farrell, Springfield, Mass., assignor to Package Machinery Company, East Longmeadow, Mass.
Division of Ser. No. 80,180, Oct. 1, 1979. This application May 23, 1980, Ser. No. 152,616
Int. Cl.[3] B29F *1/06*
U.S. Cl. 264—40.5 7 Claims

1. A method of setting the preload between two die plates that are moved between opened and closed positions by means of a clamping mechanism of given stroke comprising:

providing an adjustable linkage between the clamping mechanism of given stroke and one of the die plates opened and closed by the clamping mechanism to adjust the stress in the linkage and the corresponding preload between the

plates in the closed position at one limit of the clamping mechanism stroke;

adjusting the linkage between the clamping mechanism and said one of the die plates to a first length which separates the two die plates when the clamping mechanism is at said one limit of the stroke;

with the clamping mechanism at said one limit of the stroke, adjusting the linkage between the clamping mechanism and said one of the die plates from the first length to a second length which brings the two die plates into a known position relative to one another; and then

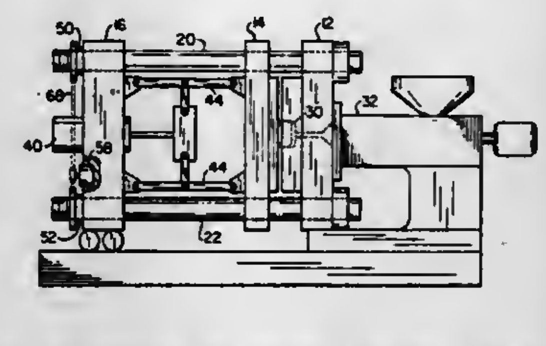

moving the clamping mechanism from said one limit of the given stroke toward the other limit to establish a separation between the die plates with the adjustable linkage at the second length; and then

changing the length of the adjustable linkage by a measured amount from the second length to a third length which preloads the die plates in the closed position by a corresponding amount when the clamping mechanism is subsequently returned to said one limit of the clamping mechanism stroke.

4,301,101
CONTINUOUS APPLICATION OF LIQUID FINISH TO A SPINNERET

Adolf Bachmann, Heimbuchenthal; Joachim Boehler, Grosswallstadt, and Heinz Linhart, Erlenbach, all of Fed. Rep. of Germany, assignors to Akzona Incorporated, Asheville, N.C.
Filed Apr. 28, 1980, Ser. No. 144,278
Claims priority, application Fed. Rep. of Germany, May 14, 1979, 2919331
Int. Cl.[3] B29H *21/04*
U.S. Cl. 264—130 8 Claims

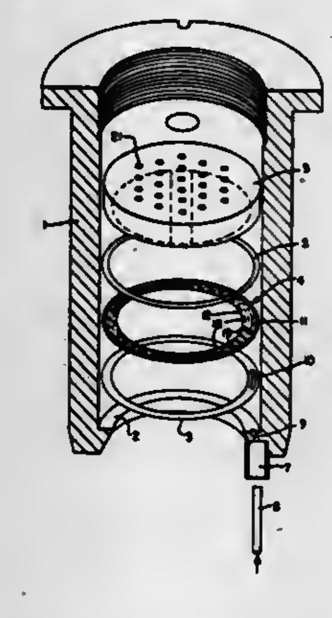

1. A process for the continuous application of liquid finish to the exit face of a spinneret for melt spinning of polymeric materials which comprises continuously metering the liquid finish via a feed opening in a fastening element to a removable and reinstallable distribution element provided with openings corresponding to the pattern spinning orifices in the spinneret and directing the flow of the liquid finish around said openings in said distribution element thereby distributing the finish over the exit face, said distribution element being pressure-fitted by the fastening element on to the exit face of the spinneret.

4,301,102
SELF-CRIMPING POLYAMIDE FIBERS

George A. Fernstrom; Harold H. Hebeler; Perry H. Lin, and Robert R. Moneymaker, all of Seaford, Del., assignors to E. I. Du Pont de Nemours and Company, Wilmington, Del.
Filed Jul. 16, 1979, Ser. No. 57,973
Int. Cl.[3] B29C *17/00;* D01D *5/22;* D02G *3/00*
U.S. Cl. 264—151 7 Claims

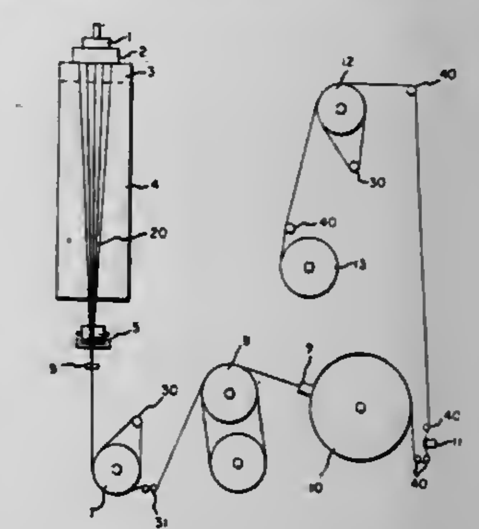

1. In a process for preparing self-crimpable monocomponent fibers, the process being of the type which comprises in sequence the steps of melt-spinning a polymer of polyhexamethylene adipamide or polycaproamide into filaments, air-quenching the filaments, contacting the filaments with water and then drawing the filaments, the improvement comprising:

quenching the filaments to an average surface temperature in the range of about 40° to 130° C. by a cross-flow of air having an average velocity of less than 3 meters per second,

applying to the filaments, while at said surface temperature, an effective amount of an aqueous liquid, and

drawing the filaments without any external heating at a draw ratio of at least 1.3:1 to provide the filaments with a tenacity of at least 1.3 grams per denier, a break elongation of no greater than 120% and an ability, when subjected to a heat relaxation treatment, to develop a substantially helical, frequently reversing crimp of at least 6 filament crimp index.

4,301,103
COMPOSITION AND PROCESS FOR DELUSTERING PLASTISOL FILMS

John W. Uphoff, Kankakee, Ill., assignor to Brunswick Corporation, Skokie, Ill.
Division of Ser. No. 25,071, Mar. 29, 1979, Pat. No. 4,238,382. This application Jul. 18, 1980, Ser. No. 169,970
Int. Cl.[3] B29D *7/00*
U.S. Cl. 264—166 13 Claims

1. A process of treating a carrier cloth for use in the production of plastisol film having a delustered surface, said process comprising the steps of:

removing the sizing from said cloth;

adjusting the ph of said cloth to about 6.0-7.5;

preparing a first mixture of a silicone polyester resin, an effective amount of a fluorotelemer dispersed in a solvent for delustering the surface of said plastisol and permitting ready release of said film from said cloth during the production of said plastisol film, an effective amount of an inert flatting agent for reducing the gloss of said plastisol surface during said production, an effective amount of an anti-settling agent to prevent settling of said flatting agent prior to curing of said resin, and an aromatic solvent;

blending said first mixture to disperse the particulate solids therein to maintain the sizes thereof no greater than about 25 microns;
preparing a delustering agent by admixing with said blended first mixture a curing agent for curing said resin upon application of an effective amount of heat, an effective amount of a catalyst solution to initiate reaction between said resin and said curing agent upon application of said heat, and an additional aromatic solvent to maintain said delustering agent in solution and to enable ready application thereof to said cloth;
coating the surfaces of said cloth with said delustering agent solution to fill the interstices therein; and
drying said coated cloth at an elevated temperature sufficient to cure said resin.

8. A process of manufacturing a plastisol resin film having a delustered surface, said process comprising the steps of:
applying to the surfaces of a continuous roll of woven cloth, which cloth has been desized and has a pH of about 6.0-7.5, a solution of a delustering agent comprising a mixture of about 25-60% by weight of a silicone polyester resin, about 1-20% by weight of a fluorotelemer dispersed in a solvent, an effective amount of a curing agent for reacting with and curing said resin upon application of an effective amount of heat, an effective amount of a catalyst solution to initiate reaction between said resin and said curing agent upon application of said heat, an effective amount of an inert flatting agent for reducing the gloss of said plastisol, an effective amount of an anti-settling agent comprising a thixotrop in solution to prevent settling of said flatting agent prior to curing of said resin and to prevent foaming of said delustering agent when applied to said carrier cloth, and an effective amount of an aromatic solvent to maintain said mixture in solution prior to application of said heat and to permit ready application of said delustering agent to said cloth;
drying the coated cloth at an elevated temperature sufficient to cure said resin;
applying a film-forming plastisol agent to one surface of said coated carrier cloth;
curing said plastisol agent to form a solid film on said cloth; and
separating said plastisol film from said carrier cloth, said separated carrier cloth being reusable without further coating or treatment.

4,301,104
PROCESS FOR SELF-CRIMPING ACRYLIC FIBER FROM A MELT OF TWO NON-COMPATIBLE POLYMERS
William E. Streetman, Gulf Breeze, and Shashikumar H. Daftary, Pensacola, both of Fla., assignors to American Cyanamid Company, Stamford, Conn.
Filed Mar. 12, 1980, Ser. No. 129,765
Int. Cl.³ D01D *5/22*
U.S. Cl. 264—168 **4 Claims**

1. A process for producing a self-crimping acrylonitrile polymer fiber which comprises preparing a fusion melt of water and (1) a first polymer comporising from about 80 to about 99 weight percent acrylonitrile and about 1 to about 20 weight percent of one or more monomers copolymerizable with acrylonitrile and (2) a second polymer incompatible with said first polymer and having thermal and/or hydrophilic properties which differ from those of said first polymer by an amount sufficient to provide self-crimping properties in said fiber, said first polymer constituting the major weight proportion of polymer and said fusion melt being free of any separate phase of water and/or unmelted polymer, dispersing the second polymer melt heterogeneously within the first polymer melt, extruding the resultant dispersion through a spinneret directly into a steam-pressurized solidification zone maintained under conditions which control the rate of release of water from the nascent extrudate, enable the extrude to solidify and maintain the solidified extrudate in plastic state and subjecting the plastic extrudate to stretching to provide desirable textile properties therein.

4,301,105
PROCESS FOR SPINNING POLY(POLYMETHYLENE TEREPHTHALAMIDE) FIBER
Denis Coleman, Stamford, Conn., and Edwin J. Siegman, Pensacola, Fla., assignors to American Cyanamid Company, Stamford, Conn.
Filed Apr. 21, 1980, Ser. No. 142,278
Int. Cl.³ D01F *6/00*
U.S. Cl. 264—205 **5 Claims**

1. A process for preparing fiber which comprises preparing a homogeneous single phase fusion melt of a poly(polymethylene terephthalamide) and water at a temperature above the boiling point of water at atmospheric pressure and at a temperature and pressure which maintain water in liquid state, the temperature being below the deterioration temperature of the polymer, extruding said melt through a spinneret to form filaments, and stretching the resulting filaments to provide molecular orientation.

4,301,106
SPINNING PROCESS FOR NYLON 4 FIBER
Denis Coleman, Stamford, Conn., and Edwin J. Siegman, Pensacola, Fla., assignors to American Cyanamid Company, Stamford, Conn.
Filed Apr. 21, 1980, Ser. No. 142,280
Int. Cl.³ D01F *6/00*
U.S. Cl. 264—205 **3 Claims**

1. A process for spinning a nylon 4 fiber which comprises preparing a homogeneous single phase fusion melt of polypyrrolidone and water at a temperature above the boiling point of water at atmospheric pressure and at a temperature and pressure which maintain water in liquid state, said temperature being below the deterioration temperature of said polypyrrolidone, extruding said melt through a spinneret to form a filament, and stretching said filament to provide molecular orientation.

4,301,107
MELT-SPINNING A PLURALITY OF ACRYLONITRILE POLYMER FIBERS
Robert P. Kreahling, and Ronald E. Pfeiffer, both of Pensacola, Fla., assignors to American Cyanamid Company, Stamford, Conn.
Continuation of Ser. No. 938,199, Aug. 30, 1978, abandoned, which is a continuation-in-part of Ser. No. 798,202, May 18, 1977, abandoned. This application Oct. 23, 1979, Ser. No. 85,078
Int. Cl.³ D01F *7/00*
U.S. Cl. 264—206 **5 Claims**

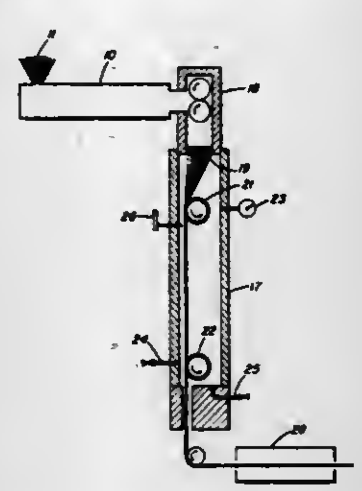

1. In a process for melt-spinning an acrylonitrile polymer which comprises extruding a single phase fusion melt of an acrylonitrile copolymer having a number average molecular weight in the range of about 16,000-45,000 and water through a spinnerette to form a plurality of filaments directly into a steam-pressurized solidification zone wherein the temperature, pressure, and saturation of steam are maintained under conditions, such that said filaments solidify, remain in a stretchable state sufficient to achieve a total stretch ratio of at least about 25, relative to the linear flow of said fusion melt through said spinnerette, and the amount of water retained in said filaments is sufficient to maintain the filaments in a plastic state and stretching said filaments while in said solidification zone at a total stretch ratio of at least about 25, relative to the linear flow of said fusion melt through said spinnerette to provide fiber, the improvement which comprises accomplishing said stretching being a stretch ratio between about 1.5 and about 3.5 and the subsequent stage being at a stretch ratio greater than that of said first stage.

4,301,108
PROCESS FOR MELT-SPINNING TRANSPARENT ACRYLONITRILE POLYMER FIBER FROM A HYDROPHOBIC POLYMER
Maurice M. Zwick, Stamford, Conn., assignor to American Cyanamid Company, Stamford, Conn.
Filed May 8, 1980, Ser. No. 147,807
Int. Cl.³ D01F *7/00*
U.S. Cl. 264—206 **4 Claims**

1. A process for preparing a substantially transparent shaped article from a hydrophobic fiber-forming acrylonitrile polymer which comprises preparing in a compacting and melting zone a fusion melt of about 70 to about 90 parts of a hydrophobic fiber-forming acrylonitrile polymer, from about 10 to about 30 parts of water, from about 3 to about 25 parts of an N-vinylamide which is water-soluble below 120° C. and uniformly distributed in said melt an effective amount of a polymerization initiator, said melt being at a temperature above the boiling point of water at atmospheric pressure, and at a pressure sufficient to maintain water in liquid state, the amounts of polymer and water in said melt being such that they form a single phase melt; converting a major portion of the monomer content to polymer while said melt remains within said compacting and melting zone; extruding the polymerized melt through a spinneret directly into a steam-pressurized solidification zone maintained under conditions of saturation, and at a pressure and temperature that control the rate of release of water from the nascent extrudate and maintain said extrudate in stretchable state; stretching said extrudate while it remains within said solidification zone to provide polymer orientation; exiting said stretched extrudate into the atmosphere; and drying the resulting extrudate at a dry-bulb temperature in the range of about 110° C. to 180° C. and at a wet-bulb temperature in the range of about 60° C. to 100° C.

4,301,109
METHOD OF MOLDING A SUSPENSION IDLER
Arthur F. Kain, 1726 Virginia Ct., Lakeland, Fla. 33803
Filed Aug. 4, 1980, Ser. No. 174,750
Int. Cl.³ B29D *3/00*
U.S. Cl. 264—219 **4 Claims**

1. A method of making a suspension idler of a molded polymer material comprising in combination:
making a vertical mold having a plurality of shaft mold portions spaced between a plurality of roller mold portions, said roller mold portions having angled sides angling from said shaft portions to the perimeter of each said roller portion, whereby vertical molding can be accomplished without entrapment of air;
attaching a shaft having an anchor on one end portion to a shaft support bracket at each end of said vertical mold and protruding through an opening in said mold, each said shaft being positioned by closing said mold to lock each shaft in a supported position to said shaft support brackets;
filling said mold with a liquid polymer from the bottom thereof; and

curing said polymer and removing said molded suspension idler having end shafts thereon from said mold.

4,301,110
RIM ELASTOMERS WITH IMPROVED HEAT DISTORTION AND TEAR PROPERTIES
Michael Cuscurida; Richard J. G. Dominguez, and Doris M. Rice, all of Austin, Tex., assignors to Texaco Inc., White Plains, N.Y.
Filed Aug. 25, 1980, Ser. No. 180,748
Int. Cl.³ C08G *18/48, 18/14, 18/82;* **B28B** *1/24*
U.S. Cl. 264—328.14 **9 Claims**

1. In a method for making a polyurethane elastomer of significantly improved heat distortion and tear properties wherein a reaction mixture comprising an aromatic polyisocyanate, a high molecular weight polyol and a chain extending agent comprising a low molecular weight active hydrogen-containing compound of at least a functionality of 2 is injected via a RIM machine into a mold cavity of the desired configuration; the improvement which comprises utilizing as said polyol a poly(oxybutyleneoxyethylene) glycol having a molecular weight range of about 2,000-6,000.

4,301,111
HORIZONTAL BLOW MOLDING
Tyler K. Olcott, Greenville, S.C., assignor to W. R. Grace & Co., Cryovac Division, Duncan, S.C.
Filed Mar. 20, 1980, Ser. No. 132,201
Int. Cl.³ B29C *17/07*
U.S. Cl. 264—515 **9 Claims**

1. A process for molding hollow objects comprising:
horizontally extruding a tubular form onto a conveying means;
introducing pressurizing fluid into an interior of said tubular form to support said tubular form and providing said tubular form with a first seal to form a horizontally aligned parison;
providing said parison with a second seal;
severing said horizontally aligned parison from said tubular form;
conveying said horizontally aligned parison so that said

conveying means and said horizontally aligned parison are located between movable mold sections;
removing said conveying means from between said movable mold sections; and
forming said parison into a predetermined configuration between said movable mold sections.

4,301,112
PROCESS FOR BIAXIALLY ORIENTED ACRYLONITRILE POLYMER BARRIER FILM

Maurice M. Zwick, Stamford, Conn., assignor to American Cyanamid Company, Stamford, Conn.

Filed May 12, 1980, Ser. No. 148,645
Int. Cl.³ B29D *7/06;* D01F *1/02*
U.S. Cl. 264—564 **10 Claims**

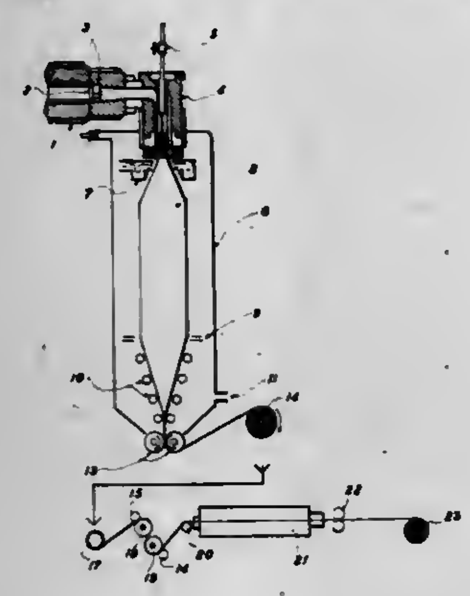

1. A process for preparing a biaxially oriented barrier film which comprises preparing a single phase fusion melt of an acrylonitrile polymer and water, said polymer being composed of repeating units derived from about 68 to 93 weight percent acrylonitrile and, correspondingly, 32 to 7 weight percent of one or more monomers copolymerizable with acrylonitrile and containing at least about 10 parts per million of residual monomer; extruding said melt through a circular die to form a tubular film, said extruding being directly into a steam-pressurized solidification zone maintained under conditions of saturation, pressure, and temperature which control the rate of release of water from the nascent film; introducing steam and air under pressure into the tubular film structure as it is formed by the die to expand and stretch the nascent film in the transverse direction while drawing the film in the longitudinal directly so as to provide biaxial orientation while the film remains within the solidification zone; flattening the stretched film for removal from the solidification zone; and removing the flattened film from the solidification zone, said film having a residual monomer content substantially less than that of the acrylonitrile polymer employed.

4,301,113
CIRCULATION SYSTEM FOR BIOCIDAL GAS

Donald E. Alguire, Downers Grove; Robert Bennett, Chicago; Norbert Kotulla, Park Ridge, and Anthony C. Yeung, Downers Grove, all of Ill., assignors to Griffith Laboratories U.S.A., Inc., Alsip, Ill.

Filed Sep. 5, 1980, Ser. No. 184,248
Int. Cl.³ A61L *2/20*
U.S. Cl. 422—2 **7 Claims**

1. In the operation of a treatment chamber containing articles to be treated to reduce the concentration of viable microorganisms and insects present in said articles as contaminants thereof and including the step of exposing said articles to a biocidal gas, said gas being further characterized by a high degree of flammability, the improvement comprising circulating said gas throughout said chamber to enhance contact between said gas and articles in said chamber while obviating possible inherent explosion and ignition hazards of said gas contained in said chamber,
said improvement further comprising circulating said gas under conditions completely to isolate said gas from contact with electrical devices and circuitry, and including the steps of
attaching to said chamber a gas circulation loop having spacially separated gas input and gas exhaust ports communicating with the interior of said chamber at remote locations therein,

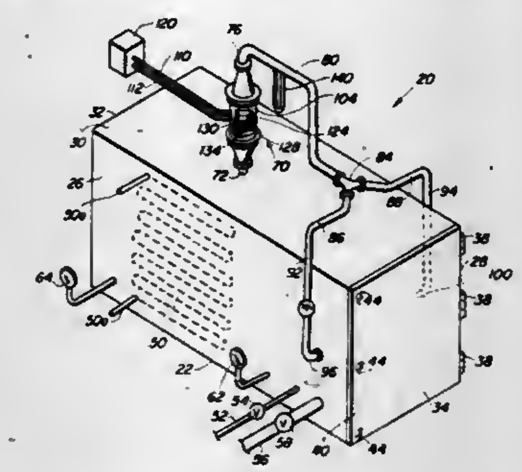

connecting fan means in said loop for circulating gas through said loop and through said chamber in fluid-flow communication therewith,
operatively coupling turbine means to said fan means for forcibly rotating said fan means to circulate said gas,
maintaining said turbine means in gas flow isolation from said fan means and from said gas circulation loop and said chamber,
developing pressurized turbine driving fluid in a fluid-confining system isolated from said chamber and from said gas circulation loop, and delivering said pressurized fluid to impel said turbine means to impart rotational gas circulating movement to said fan means.

4,301,114
MOLECULAR SIEVE TRAP FOR NITROGEN COMPOUND DETECTION

David P. Rounbehler, Concord, and John W. Reisch, Brookline, both of Mass., assignors to Thermo Electron Corporation, Waltham, Mass.

Filed Jun. 30, 1980, Ser. No. 164,476
Int. Cl.³ G01N *21/64, 31/12*
U.S. Cl. 422—52 **21 Claims**

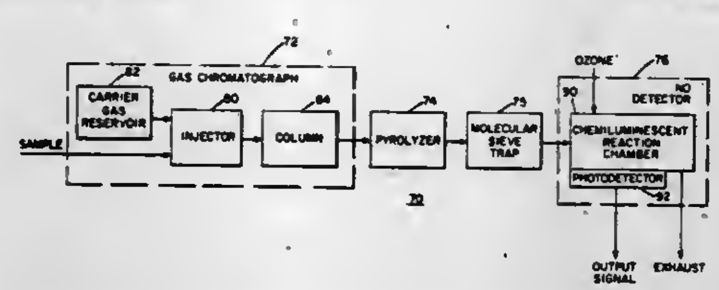

8. Apparatus for measuring in a sample the amount of predetermined nitrogen compounds comprising:
a chromatograph for receiving said sample and producing an effluent including, at separate intervals of time, a first portion containing said predetermined nitrogen compounds and a second portion without said compounds;
a reactor for selectively liberating NO gas from the nitrogen compounds of said first portion, thereby producing a reactor effluent containing NO gas;
a NO detector for measuring the amount of NO gas liberated in said reactor; and
a trap between said reactor and said detector for selectively trapping substances from said reactor effluent, said trap including a packing of a granular molecular sieve material permeable to the flow therethrough of NO gas and effective to trap and hold substances whose presence in said detector might interfere with measurement of the NO gas liberated by said reactor.

4,301,115
TEST DEVICE RESISTANT TO CROSS CONTAMINATION BETWEEN REACTANT AREAS AND PROCESS FOR MAKING IT

Myron C. Rapkin, and David L. Tabb, both of Elkhart, Ind., assignors to Miles Laboratories, Inc., Elkhart, Ind.

Filed Jun. 22, 1979, Ser. No. 51,224
Int. Cl.³ G01N *21/00, 31/22*
U.S. Cl. 422—56 **13 Claims**

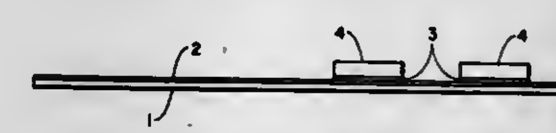

1. In a test device for analyzing a test sample for the presence of one or more constituents, the device comprising a base support member, a hydrophobic layer affixed to the support member, and two or more reagent compositions affixed to the hydrophobic layer, each respectively responsive to a particular sample constituent or concentration thereof, the improvement wherein said hydrophobic layer comprises finely divided silica particles having covalently affixed to the surfaces thereof groups having the structure

$$—O—SiR_3$$

wherein said R substituents, same or different, are hydrogen, lower alkyl, or aryl; and a suitable binder.

4,301,116
SAMPLE TRAY FEEDING APPARATUS FOR USE WITH AN AUTOMATED ANALYZER

Hideaki Ida, Musashi-murayama, and Toshihide Fujiwara, Fuchu, both of Japan, assignors to Olympus Optical Co., Ltd., Tokyo, Japan

Filed May 2, 1980, Ser. No. 146,368
Claims priority, application Japan, May 11, 1979, 54/57845
Int. Cl.³ G01N *1/10, 1/28, 35/06*
U.S. Cl. 422—65 **2 Claims**

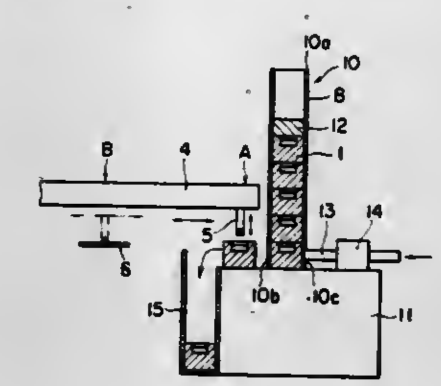

1. A sample tray feeding apparatus comprising a sample tray accommodating container having means to accommodate a large number of sample trays in a condition piled up on one another and to allow only the sample tray located at the lowermost position to be shifted in a lateral direction, each said tray having at least one cavity therein on a first surface thereof, a protective cover for placement on the uppermost one of said sample trays, a sample tray feeding mechanism for shifting said lowermost one of said sample trays to a sample adhering position, each said sample tray having a second surface opposite said first surface thereof shaped so that when said second surface of a said tray engages said first surface on a subjacent tray, said cavity of said subjacent tray will be covered and sealed so as to prevent material in said cavity from evaporating.

4,301,117
GAS-LIQUID EQUILIBRATION APPARATUS

Ronald B. Smernoff, Belmont, Calif., assignor to Analytical Products, Inc., Belmont, Calif.

Continuation of Ser. No. 7,768, Jan. 30, 1979, Pat. No. 4,253,845. This application Sep. 12, 1980, Ser. No. 186,489
Int. Cl.³ G01N *33/50, 33/96*
U.S. Cl. 422—99 **8 Claims**

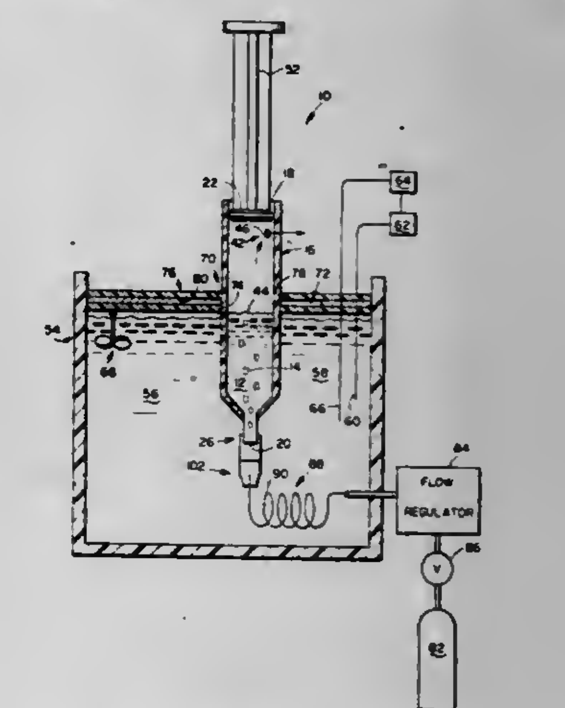

1. Apparatus for equilibrating a liquid sample with gas, comprising:
a barrel open at a first and at a second end thereof;
a piston in mating slidable relation within said barrel;
a membrane affixed in said barrel adjacent said second end thereof, said membrane being substantially impervious to flow of said liquid sample when under the influence of normal gravity and being pervious to flow of said gas; and
means for allowing gas to flow out of said barrel above a liquid level therein.

4,301,118
PROTEIN CONCENTRATOR

Roy T. Eddleman, Beverly Hills, Calif., and Gregory F. Moran, Monrovia, both of Calif., assignors to Spectrum Medical Industries, Inc., Los Angeles, Calif.

Filed Mar. 6, 1980, Ser. No. 127,899
Int. Cl.³ B01L *11/00, 3/00;* B01D *13/00*
U.S. Cl. 422—101 **11 Claims**

1. A protein concentrator, comprising:
means defining a reservoir for holding a protein solution;
a cover assembly held within said reservoir;
a semi-permeable membrane member having openings large enough to permit passage of water but having a molecule weight cut-off sufficient to prohibit the passage of at least some of the consituents of a protein solution, said membrane member being supported by said cover assembly and forming a tubular container positioned within the reservoir so that a protein solution held within the reservoir will contact the outer surface of the semi-permeable member and the inner surface of the semi-permeable member will not be exposed to the contents of the reservoir, the semi-permeable member being sealed to the container to prevent any portion of the protein solution from passing

to the interior of the container without passing through the member; and

a water soluble polymeric powder held within said membrane, said polymeric powder having a molecular size so that it will not pass through the semi-permeable membrane member, whereby when a protein solution is placed in the reservoir, the protein solution will contact the

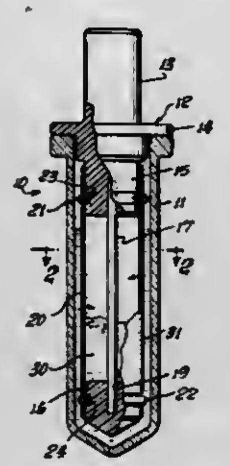

exterior surface of the semi-permeable membrane and a portion of the protein solution will pass through the membrane and dissolve a portion of the water soluble polymeric powder creating a concentration gradient across the membrane to increase the flux of the solution through the membrane and into the container thereby concentrating the protein solution in the reservoir.

4,301,119

APPARATUS AND METHOD FOR DISPENSING FOAMABLE COMPOSITIONS

Walter H. Cobbs, Jr., Amherst, and William R. Rehman, Vermilion, both of Ohio, assignors to Nordson Corporation, Amherst, Ohio

Filed Feb. 28, 1979, Ser. No. 16,207

Int. Cl.³ B01J *19/00;* **C08J** *9/30*

U.S. Cl. 422—133 **11 Claims**

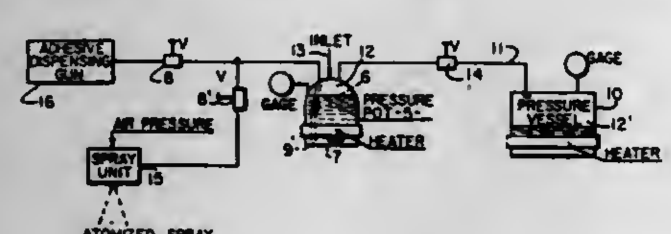

1. Apparatus for dispensing a foamable composition comprising

a vessel containing a foamable mixture of a liquid and a blowing agent under pressure, said vessel having means defining a vapor space above said liquid and a dispensing outlet, and

a pressure container holding a blowing agent under pressure and having means defining a vapor space connected to the vapor space means of said vessel, said pressure container haing means for maintaining a substantially constant composition of said blowing agent in said vapor space of said vessel under a vapor pressure at least equal to the vapor pressure of said mixture for dispensing a foam of constant foam-volume ratio, said means for maintaining including heating means.

4,301,120

CHAIN INTRODUCTION MEANS FOR A CRYSTAL GROWTH PULLING HEAD

Clifton B. Sibley, Needham, Mass., assignor to Ferrofluidics Corporation, Nashua, N.H.

Filed Sep. 2, 1980, Ser. No. 183,540

Int. Cl.³ C30B *15/30*

U.S. Cl. 422—249 **6 Claims**

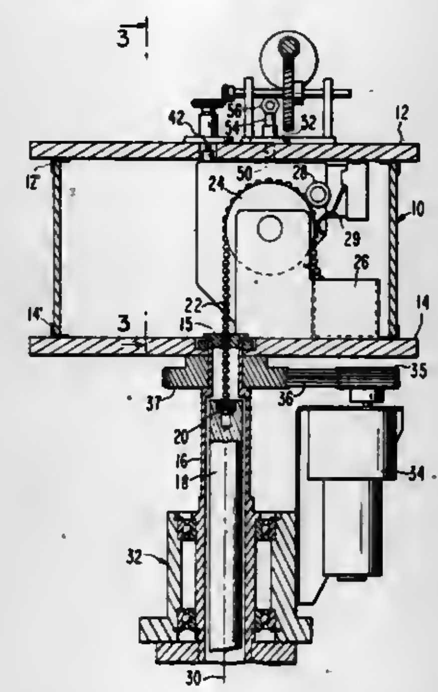

1. In an apparatus for drawing a crystal from a melt, said apparatus comprising:

(a) crucible means for holding said melt;

(b) pulling-head means for drawing a seeded crystal from said melt;

(c) means providing relative rotation between said melt and a crystal drawn therefrom along a vertical axis of rotation of said crystal; and

(d) housing means to provide a sealed, contamination-free environment for the apparatus, including the pulling head, said pulling head comprising

(i) seed-holder means for grasping a seeded crystal drawn from said melt,

(ii) chain means, having a one end for pulling said seed-holder means along a vertical axis and another free end, said chain means comprising a plurality of flexibly coupled chain links,

(iii) take-up means cooperating with said chain means, to move said seeded crystal along the vertical axis, said take-up means comprising sprocket means, including teeth spaced along the periphery thereof to engage said chain links, said sprocket means disposed to align a vertically oriented tangent from said sprocket means congruent with said vertical axis,

(iv) means for rotating said sprocket means to move said chain along the vertical axis,

(v) containment means to store the free end of untensioned chain taken up by said sprocket and chain discharged therefrom,

(vi) the housing means enclosing said pulling head and comprising a cover plate disposed above said sprocket and characterized by an aperture in said cover plate vertically aligned with the plane of said sprocket, and

(vii) sealing means to seal hermetically the aperture, whereby the chain means may be replaced without removing of the cover plate and breaking into the sealed environment of the pulling head, by directing new chain through the aperture and into engagement with the sprocket means.

4,301,121

METHOD FOR LEACHING METAL BEARING ORES

Henry Von Kohorn, 22 Perkins Rd., Greenwich, Conn. 06830

Continuation-in-part of Ser. No. 133,516, Mar. 24, 1980. This application Nov. 10, 1980, Ser. No. 205,878

The portion of the term of this patent subsequent to Jul. 21, 1998, has been disclaimed.

Int. Cl.³ C22B *3/00*

U.S. Cl. 423—1 **41 Claims**

1. A method for above-ground leaching of metal bearing ores which comprises:

(a) providing an ore body to be leached having positioned therein void-creating members, said members being positioned substantially vertical or at an angle to the horizontal plane in order that they are capable of being pulled out of said ore body in a substantially upward direction;

(b) partially performing the leaching;

(c) removing said members by pulling out in a substantially upward direction, thereby creating internal voids and causing shifting of ore in said ore body; and

(d) completing the leaching.

4,301,122

RECOVERY OF URANIUM FROM PHOSPHATE ORES

George C. Johnson, Princeton, N.J., assignor to Mobil Oil Corporation, New York, N.Y.

Filed Oct. 19, 1978, Ser. No. 953,060

Int. Cl.³ C01G *43/00*

U.S. Cl. 423—17 **5 Claims**

1. A method for recovering uranium from ammonium precipitate containing same which comprises (1) treating, at from ambient temperatures to about 150° C., the ammonium precipitate with a dilute solution of sodium carbonate and sodium bicarbonate to remove substantially the portion of the said precipitate containing ions other than uranium, the total carbonate content of said solution being from about 0.05 to about 10 parts per 10 parts of said precipitate, and (2) treating, at from ambient temperatures to about 150° C., the remaining precipitate with a concentrated solution of sodium carbonate and sodium bicarbonate to remove uranium, the total carbonate content in said solution being from about 40 to about 100 parts per 10 parts of the original precipitate.

4,301,123

METHODS OF PROCESSING URANIFEROUS ORES

Michel Gruet, Chatillon-sous-Bagneux; Paul Lafforgue, Bessines, and Pierre Michel, Bourg-la-Reine, all of France, assignors to Compagnie Generale des Matieres Nucleaires, Paris, France

Filed May 2, 1979, Ser. No. 35,431

Claims priority, application France, May 5, 1978, 78 13372

Int. Cl.³ C01G *43/00*

U.S. Cl. 423—20 **9 Claims**

1. Method of processing uranium ore, particularly refractory ores, comprising the steps of:

crushing the ore,

impregnating the ore with a concentrated aqueous solution of sulphuric acid for a period not exceeding 30 minutes, the volume of solution per unit weight of crushed ore being selected to obtain a mixture which retains a solid phase consistency and does not reach a sticky condition,

disintegrating the impregnated mixture with an aqueous solution into a thick paste or pulp,

digesting the pulp for a duration not exceeding 10 hours, and carrying out solid/liquid separation,

wherein the sulphuric acid content of the concentrated solution is selected for the residual acidity at the end of pulp digestion to be of from 10 g/l to 40 g/l.

4,301,124

COBALT SOLVENT EXTRACTION WITH DIOXIME ION EXCHANGERS

Ralph W. M. Lai, Lexington, and John K. Litchfield, Bedford, both of Mass., assignors to Kennecott Corporation, Stamford, Conn.

Continuation of Ser. No. 11,034, Feb. 9, 1979, Pat. No. 4,248,837. This application Jan. 24, 1980, Ser. No. 162,538

The portion of the term of this patent subsequent to Feb. 3, 1998, has been disclaimed.

Int. Cl.³ C01G *51/00*

U.S. Cl. 423—24 **2 Claims**

1. A process for the recovery of cobalt values from an aqueous solution containing cobalt values comprising:

1. contacting said aqueous solution with a water-immiscible organic extractant solution containing methyl hexyl dioxime or methyl octyl dioxime, wherein said aqueous solution is at a pH of at least 9.5, said dioxime being dissolved in an essentially water-immiscible organic solvent, said dioxime comprising between 1–15% by weight of the resulting solution; and,

2. separating the resulting metal-pregnant organic phase from the aqueous phase.

4,301,125

EXTRACTION OF PRE-REDUCED LATERITIC ORES WITH AQUEOUS SULPHURIC ACID IN THE PRESENCE OF PEROXIDANT

Alfred R. Burkin, Brentwood, and Andrew J. Monhemius, Twickenham, both of England, assignors to Interox Chemicals Ltd., London, England

Continuation of Ser. No. 886,436, Mar. 14, 1978, abandoned. This application Jul. 26, 1979, Ser. No. 60,762

Claims priority, application United Kingdom, Mar. 31, 1977, 13544/77; Mar. 31, 1977, 13545/77

Int. Cl.³ C22B *23/04;* **B01D** *11/02*

U.S. Cl. 423—150 **3 Claims**

1. In a process for the extraction of nickel from a prereduced lateritic ore containing after reduction nickel in the zero oxidation state and iron, at least part of which is in the zero oxidation state comprising contacting the prereduced ore with an aqueous sulphuric acid leach liquor, the improvement consisting essentially of maintaining the prereduced ore and leach liquor in contact until at least some nickel has been brought into solution, at a temperature of from 30° to 70° C., the liquor containing peroxymonosulphuric acid or the same being introduced thereinto, in a mole ratio of from 0.3 to 1.0 moles per mole of sulphuric acid, and the sulphuric peroxymonosulphuric acids concentration in total being from 15 to 25 gpl.

4,301,126
PROCESS FOR DESTROYING PHOSGENE
Gerd Duembgen, Dannstadt-Schauernheim; Erfried Voelkl, Frankenthal, and Gerhard Pforr, Ludwigshafen, all of Fed. Rep. of Germany, assignors to BASF Aktiengesellschaft, Fed. Rep. of Germany
Filed Apr. 24, 1980, Ser. No. 143,476
Claims priority, application Fed. Rep. of Germany, May 16, 1979, 2919661
Int. Cl.³ B01D *53/34;* **C01B** *17/01*
U.S. Cl. 423—240 **3 Claims**

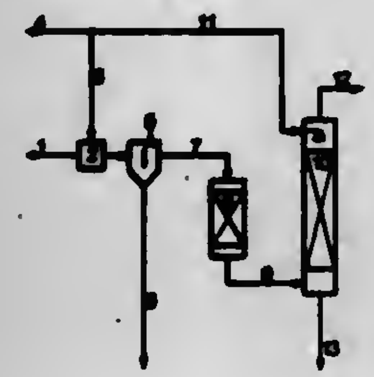

1. A process for destroying phosgene contained in gases which comprises: passing the gas containing phosgene mixed with water vapor and in the absence of liquid water through a bed of active carbon at a temperature of from 10° to 80° C.

4,301,127
FLUE GAS SCRUBBING SYSTEM
Stephen L. Goodstine, Windsor, and Philip C. Rader, Windsor Locks, both of Conn., assignors to Combustion Engineering, Inc., Windsor, Conn.
Filed Jul. 25, 1979, Ser. No. 60,553
Int. Cl.³ C01B *17/00*
U.S. Cl. 423—242 **1 Claim**

1. A method of operating a scrubbing system using a dissolved calcium compound for the removal of SO_2 from flue gas comprising: mixing a calcium compound with water; contacting the SO_2 containing flue gas and the calcium compound mixture, thereby obtaining a slurry containing calcium sulfite and calcium sulfate and undissolved calcium compound; collecting the slurry; returning the collected slurry for repeated contact with the gas; adding additional calcium compounds to the slurry; extracting a portion of the collected slurry; partially separating the extracted portion of the collected slurry into a first stream rich in calcium sulfite and a second stream rich in calcium sulfate and undissolved calcium compound, based on the rate of settling of each of the constituents; passing the calcium sulfite of said first stream to waste; separating the largest crystals of calcium sulfate which enter said second stream from said second stream; passing these large crystals to waste; and returning the calcium sulfate and undissolved calcium compound remaining in said second stream to said collected slurry in an amount to maintain the desired sulfate concentration in the slurry.

4,301,128
METHOD FOR PURIFICATION OF GASES
Niels E. Hastrup, Copenhagen, Denmark, assignor to F. L. Smidth & Co., Cresskill, N.J.
Filed Mar. 12, 1980, Ser. No. 129,586
Claims priority, application Denmark, Mar. 16, 1979, 1100/79
Int. Cl.³ B01D *47/00;* **B03C** *3/00*
U.S. Cl. 423—242 **2 Claims**

1. A method for selective purification of high temperature exhaust gas from a boiler plant comprising: (a) feeding an exhaust gas from a boiler plant containing excess oxygen, fly ash, and gaseous sulfur oxides to an electrostatic precipitator constructed and arranged to separate about 90 percent by weight of said fly ash; then, (b) first electrostatically percipitating about 90 percent by weight of said fly ash having a quality suitable for use in cement and oxidizing sulphur dioxide and sulphur trioxide by the corona discharge of the precipitator; (c) feeding the partially purified gas to another separator; then, (d) spraying the exhaust gas with an aqueous solution of calcium hydroxide absorption agent, to subsequently react with said

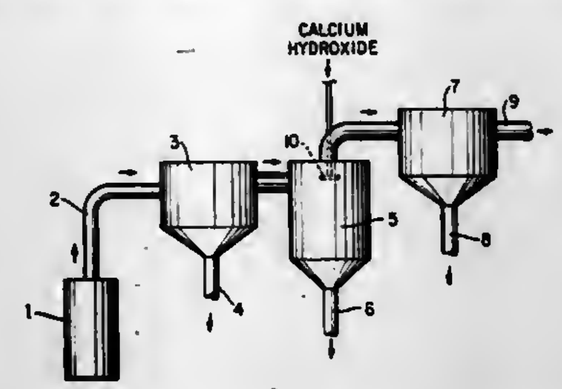

gaseous sulphur oxides, in a concentration permitting a substantially dry product to be recovered using heat from the exhaust gas; then, (e) feeding the further partially-purified gas to a bag filter; and, (f) filtering the remaining fly ash with reacted absorption agent; whereby an exhaust gas, substantially free of fly ash and gaseous sulphur oxides; and fly ash, having a quality suitable for use in cement are recovered.

4,301,129
SYNTHESIS OF $NABH_3CN$ AND RELATED COMPOUNDS
Robert C. Wade, Ipswich, and Benjamin C. Hui, Peabody, both of Mass., assignors to Thiokol Corporation, Newtown, Pa.
Continuation-in-part of Ser. No. 109,720, Jan. 4, 1980, abandoned, which is a continuation of Ser. No. 943,015, Sep. 18, 1978, abandoned. This application Nov. 12, 1980, Ser. No. 206,242
Int. Cl.³ C01B *6/15;* **C07F** *5/02*
U.S. Cl. 423—284 **6 Claims**

1. A process for the preparation of cyanoborohydrides having the formula:

RBH_3CN

wherein R is an alkali metal, a quaternary ammonium radical, or a phosphonium radical, said process comprising:
(a) reacting a cyanide compound of the formula:

RCN

wherein R is a defined above, and a BH_3 donor, and
(b) heating the reaction product of (a) under refluxing conditions until substantially all of any isocyanoborohydride produced in step (a) is converted to cyanoborohydride.

4,301,130
METHOD OF WASHING WASTE PHOSPHOGYPSUM
Jerzy Schroeder, Wroclaw; Mieczyslaw Lewandowski; Antoni Kuzko, both of Szczecin; Henryk Gorecki, Wroclaw; Krzysztof Zielinski, Szczecin; Tadeusz Pozniak, Police; Stefan Zieba, Szczecin; Helena Gorecka, Curie; Adam Pawelczyk, Wroclaw, and Andizej Wysocki, Police, all of Poland, assignors to Politechnika Wroclawska, Wroclaw, Poland
Filed Apr. 27, 1979, Ser. No. 34,075
Claims priority, application Poland, May 6, 1978, 206635
Int. Cl.³ C01B *25/16*
U.S. Cl. 423—320 **5 Claims**

1. A method of washing waste phosphogypsum, in which the calcium sulphate present is in the dihydrate form, obtained on decomposition of mineral phosphoric raw material with sulphuric acid, which comprises carrying said washing out in countercurrent on a multi-zone filter with introduction to the washing liquids in the last zone of water and a sulphuric acid solution of a concentration of sulphuric acid ranging from 20% by weight up to 98% by weight in the amount of 1 to 30% of the sulphuric acid amount used for decomposition of said phosphoric raw material, returning those filter washings having a maximum concentration of the component being washed to the decomposition stage and removing washed waste phosphogypsum, in which the calcium sulphate present is in the dihydrate form, and aqueous phosphoric acid from the washing system.

4,301,131
OXIDATION OF PHOSPHORIC ACID PLUS K COMPOUND ADDITION
Moises G. Sanchez, Severna Park, Md., assignor to W. R. Grace & Co., New York, N.Y.
Filed Nov. 28, 1980, Ser. No. 210,772
Int. Cl.³ C01B *25/16*
U.S. Cl. 423—321 R **11 Claims**

1. In the process of preparing wet process phosphoric acid with low post-precipitation characteristics, said process comprising the steps:
(a) providing a clarified phosphoric acid feed containing about 22–46% phosphoric acid as P_2O_5; 1.3–1.5% Fe as Fe_2O_3; at least 15% of the Fe being present as divalent Fe;
(b) adding aluminum silicate to the clarified acid in an aluminum silicate addition zone;
(c) concentrating the acid to a P_2O_5 content of about 45–52%;
(d) passing the concentrated acid to a crystallizing zone to provide a product stream and a stream containing most of the crystals produced in the crystallizing zone;
(e) further concentrating the product stream to a P_2O_5 content of about 57–63%;
the improvement comprising adding an oxidant to the clarified acid provided in Step (a), to oxidize most of the divalent Fe to trivalent Fe; and adding a potassium compound to the crystallizing zone in an amount effective to precipitate $(Fe,Al)_3KH_{14}(PO_4)_8.4H_2O$.

4,301,132
SILICON CARBIDE BODIES AND THEIR PRODUCTION
Peter Kennedy, Preston, England, assignor to United Kingdom Atomic Energy Authority, England
Filed Apr. 25, 1980, Ser. No. 143,757
Claims priority, application United Kingdom, May 8, 1979, 15832/79
Int. Cl.³ C01B *31/36;* **C04B** *35/52, 35/71*
U.S. Cl. 423—345 **9 Claims**

1. A reaction-sintered silicon carbide body comprising a plurality of discrete portions differing from each other in free silicon content.

6. The production of a reaction-sintered silicon carbide body comprising the steps of compacting a first mix of carbon and silicon carbide to form a first portion, compacting a second mix of carbon and silicon carbide in contact with the first portion and in proportions differing from those of the first mix, to form a second portion and a green body comprising the first and second portions, and reaction-sintering the green body in the presence of molten silicon.

4,301,133
METHOD FOR PREPARING A CALCIUM CARBIDE PRODUCT
Edward O. Hayes, Mesa, Ariz., assignor to National Research Development, Inc., Scottsdale, Ariz.
Filed Apr. 30, 1980, Ser. No. 145,306
Int. Cl.³ C01B *31/32*
U.S. Cl. 423—442 **10 Claims**

1. A method for the production of calcium carbide which comprises reacting a uniform mixture of finely divided calcium oxide and finely divided carbon with pyrophosphoric acid under pressure.

4,301,134
NOVEL DIAMOND PRODUCTS AND THE MANUFACTURE THEREOF
Herbert M. Strong, Schenectady, N.Y., assignor to General Electric Company, Columbus, Ohio
Division of Ser. No. 821,510, Aug. 3, 1977, abandoned, which is a division of Ser. No. 705,547, Jul. 15, 1976, Pat. No. 4,082,185, which is a division of Ser. No. 412,332, Nov. 2, 1973, Pat. No. 4,042,673. This application Mar. 10, 1978, Ser. No. 885,193
Int. Cl.³ C01B *31/06*
U.S. Cl. 423—446 **3 Claims**

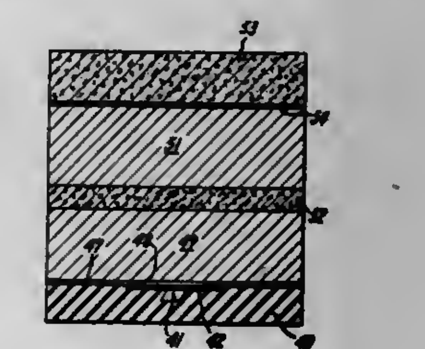

1. A synthetic gem size single crystal diamond at least 1/20th of a carat in weight which is by a temperature gradient method grown from, but separate from, a diamond seed, said crystal comprising a first growth core portion having a color selected from the group consisting of yellow, green and blue and a successively grown, second growth outer portion which envelopes said first growth core portion, said second growth outer portion having a color different from said core portion and selected from the group consisting of yellow, green and colorless, with the boundary between said portions being diffuse and without interruption.

4,301,135
PROCESS FOR SPINNING PITCH FIBER INTO A HOT GASEOUS ENVIRONMENT
Faramarz Nazem, Strongsville, and Robert C. Stroup, Bay Village, both of Ohio, assignors to Union Carbide Corporation, New York, N.Y.
Filed Dec. 26, 1979, Ser. No. 106,740
Int. Cl.³ D01F *9/12*
U.S. Cl. 423—447.4 **5 Claims**

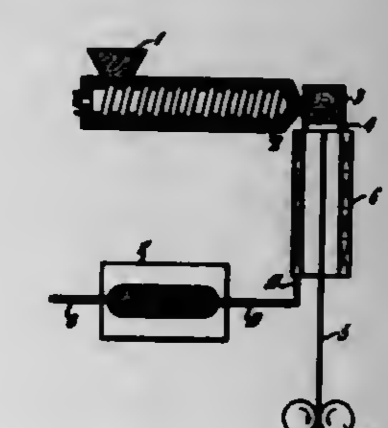

1. In a process of producing a carbon fiber from mesophase pitch having at least about 70% by weight mesophase, including the steps of spinning a pitch fiber from the mesophase pitch using a spinnerette, thermosetting the pitch fiber, and thereafter, carbonizing the pitch fiber to produce the carbon fiber, wherein the improvement comprises spinning the pitch fiber

into an inert gaseous environment having a temperature of from about 150° C. to about 400° C.

4,301,136

PROCESS FOR CONTINUOUS GRAPHITIZATION OF GRAPHITIZABLE PRECURSOR FIBERS

Ryuichi Yamamoto, and Shizuo Watanabe, both of Ehime, Japan, assignors to Toray Industries, Incorporated, Tokyo, Japan

Continuation-in-part of Ser. No. 15,000, Feb. 26, 1979, abandoned. This application May 16, 1980, Ser. No. 147,162

Claims priority, application Japan, Feb. 27, 1978, 53/20896

Int. Cl.³ D01F *9/22*

U.S. Cl. 423—447.8 **6 Claims**

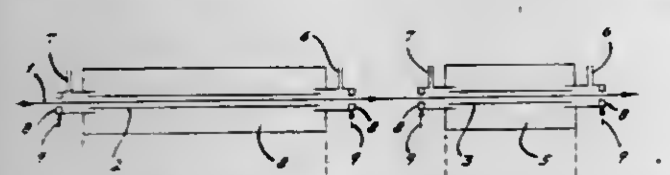

1. A process for continuously graphitizing a carbon fiber obtained from an acrylic fiber consisting essentially of at least about 95 mol % of acrylonitrile and up to about 5 mol % of one or more ethylene-type vinyl compounds which are copolymerizable with acrylonitrile which comprises passing the fiber successively through a first and a separate second heating zone, each of said zones containing an inert atmosphere and having a temperature of at least 800° C., maintaining the maximum temperature of the first heating zone at about 1700° to about 1900° C., a heating rate which is a mean heating rate of from about 1300° C. to the maximum temperature minus 100° C. at about 300° C./min to 2000° C./min, and a heating time of about 10 seconds to 10 minutes, and maintaining the maximum temperature of the second heating zone at about 2300° C. to about 2700° C.

4,301,137

REMOVAL OF CHLORINE FROM PYROLYSIS VAPORS

Kenneth A. Williams, and Hans F. Bauer, both of Diamond Bar, Calif., assignors to Occidental Research Corporation, Irvine, Calif.

Continuation of Ser. No. 862,686, Dec. 21, 1977, abandoned. This application May 7, 1979, Ser. No. 36,887

Int. Cl.³ C01B *7/00;* **C01F** *5/26, 11/20;* **B01J** *37/00*

U.S. Cl. 423—481 **7 Claims**

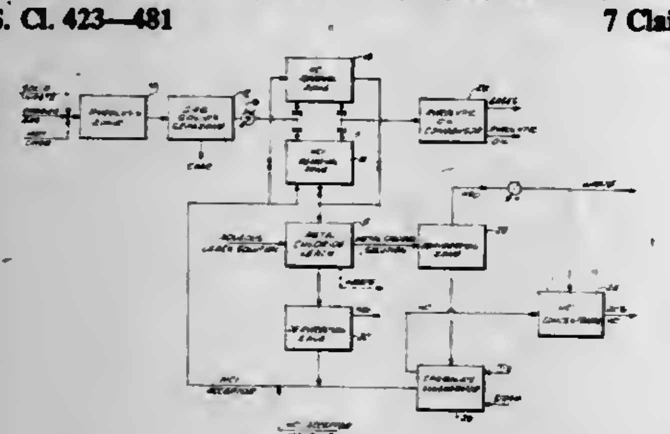

3. In a process for the pyrolysis of solid organic wastes which includes solid organic wastes which yield hydrogen chloride upon pyrolysis wherein dried, comminuted solid organic waste, a solid source of heat and a carrier gas which is nondeleteriously reactive with respect to pyrolysis products are combined and passed through a pyrolysis zone maintained at a temperature from about 600° to about 2000° F. to form pyrolysis products which comprise the solid source of heat, a carbon containing solid residue of pyrolysis, pyrolysis gases comprising a condensable pyrolytic oil and a gaseous component which includes water, hydrogen chloride, and hydrocarbons, the method of recovering a pyrolytic oil and a gaseous residue substantially free of hydrogen chloride which comprises:

(a) separating the solid source of heat and the carbon containing solid residue of pyrolysis from said pyrolysis gases;

(b) contacting the resulting solids free pyrolysis gases with a solid material containing a calcium compound selected from the group consisting of calcium oxide, calcium carbonate and mixtures thereof in a hydrogen chloride removal zone maintained at a temperature above the dew point of the pyrolysis gases to convert a portion of the calcium compound to calcium chloride and yield a pyrolysis gases residue, said calcium chloride being formed on the surface of the solid material;

(c) recovering pyrolytic oil from the pyrolysis gases residue;

(d) treating the solid material to remove calcium chloride from the surface thereof to expose unreacted calcium compound for separation of hydrogen chloride by washing the calcium chloride from the surface to form an aqueous solution of calcium chloride; and

(e) recycling said treated solid material to the hydrogen chloride removal zone.

4,301,138

SYSTEM FOR TRANSPORTING PARTICULATE SOLIDS FROM HIGH TEMPERATURE TO LOW TEMPERATURE ZONE

Kenneth W. Ryan, and Elmer H. Rogers, Jr., both of Palestine, Tex., assignors to Aluminum Company of America, Pittsburgh, Pa.

Filed Apr. 24, 1980, Ser. No. 143,172

Int. Cl.³ C01F *3/60;* **F27B** *15/08*

U.S. Cl. 423—495 **31 Claims**

1. A process of moving fluidizable particulate solids semicontinuously from a first zone of higher pressure and temperature to a second zone of lower pressure and temperature comprising the steps:

(a) introducing said particulate solids into the upper portion of a downwardly extending substantially vertical inlet leg by fluidized particle transport;

(b) moving said particulate solids downwardly within said inlet leg into the lower region of a first chamber separated from a second chamber by an overflow weir;

(c) fluidizing said particulate solids within said first chamber by the action of a fluidizing gas introduced into the bottom portions of said first chamber and moving upwardly therethrough to move said fluidized particulate solids upwardly within said first chamber and overflow said weir to enter said second chamber;

(d) fluidizing said particulate solids in said second chamber by the action of a fluidizing gas introduced into the bottom portions of said second chamber and moving upwardly therethrough, said particulate solids within said second chamber mixing with and transferring heat by direct contact heat exchange to particulate solids which previously entered said second chamber;

(e) cooling said second chamber by indirect heat transfer means;

(f) said first and second chambers being maintained at a pressure higher than that of said second zone;

(g) maintaining said fluidizing gas in said second chamber at a higher overall gas volume flow ratio of at least 5:1;

(h) moving said particulate solids from said second chamber to said second zone at said lower pressure and temperature, said particles being moved by said fluidizing gases through a flow restricting means, said movement being regulated by said flow restriction means in cooperation with said fluidizing gas flow;

(i) interrupting the flow of said particulate matter into said first chamber by interrupting the flow thereof through said flow restriction means and substantially reducing the fluidizing gas flow into said second chamber while maintaining the fluidizing gas flow within said first chamber and into said inlet leg, said fluidizing gas passing upwardly into said first zone.

4,301,139

MULTILAYER COLUMN CHROMATOGRAPHY SPECIFIC BINDING ASSAY METHOD, TEST DEVICE AND TEST KIT

Judith Feingers; Anthony J. Pick, and Daniel B. Wagner, all of Jerusalem, Israel, assignors to Ames-Yissum Ltd., Jerusalem, Israel

Filed Jun. 21, 1979, Ser. No. 50,543

Int. Cl.³ G01N *33/48;* **B01N** *23/10;* **B65D** *7/00*

U.S. Cl. 424—1 **37 Claims**

1. In a specific binding assay method for determining a ligand in, or the ligand binding capacity of, a liquid medium,

wherein for determining said ligand, said liquid medium is combined with assay reagent means comprising (i) as labeled component, said ligand or a binding analog thereof incorporated with a label and (ii) a binding agent for said ligand; or wherein for determining the ligand binding capacity of said liquid medium suspected of containing a binding agent for said ligand, said liquid medium is combined with assay reagent means comprising, as labeled component, said ligand or a binding analog thereof incorporated with a label;

thereby to form a binding reaction mixture having a bound-species as said labeled component bound to said binding agent and a free-species as said labeled component not bound to said binding agent;

wherein said bound-species and said free-species of said labeled component are separated by contacting at least a portion of said binding reaction mixture, a predetermined time after formation thereof, with a column comprising a bed of an adsorbent material which is both (a) selective for binding one of said bound-species and fre-species and (b) capillarily absorbent relative to said reaction mixture, whereby said at least a portion of said reaction mixture is drawn into said column by capillary action and said bound-species and said free-species are separated along said column; and

wherein said label is measured in one of the separated species;

the improvement wherein said column comprises at least one additional bed of material which is capillarily absorbent relative to said reaction mixture, such additional bed being disposed in said column in contact with the end of said adsorbent bed opposite that which is contacted with said reaction mixture, and said additional bed material being substantially nonadsorbent relative to the one of said bound-species and free-species which said adsorbent bed selectively binds.

4,301,140

RADIOPHARMACEUTICAL METHOD FOR MONITORING KIDNEYS

Patricia Frank, Evanston; Stephen Kraychy, Northbrook, and Ernest F. Le Von, Evanston, all of Ill., assignors to G. D. Searle & Co., Chicago, Ill.

Filed Dec. 14, 1979, Ser. No. 103,822

Int. Cl.³ A61K *49/00, 43/00;* **G01T** *1/00*

U.S. Cl. 424—1.5 **4 Claims**

1. A method of externally monitoring the kidneys comprising administering intravenously to a patient a solution of a complex of technetium-99m and a compound having the formula

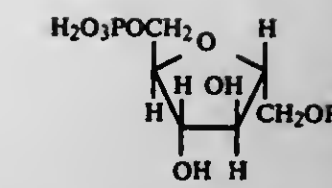

or a pharmaceutically acceptable salt thereof, wherein R is —H or $—PO_3H_2$, and monitoring radiographically the distribution of the complex in the patient and its clearance through the kidneys.

4,301,141

STRONG FOAMING TOOTHPASTE

Hans U. Scheller, Eislingen, Fed. Rep. of Germany, assignor to Wurttembergische Parfumerie-Fabrik GmbH, Eislingen, Fed. Rep. of Germany

Filed Sep. 19, 1980, Ser. No. 188,897

Claims priority, application Fed. Rep. of Germany, Mar. 26, 1980, 3011618

Int. Cl.³ A61K *7/16, 7/26*

U.S. Cl. 424—7 **10 Claims**

1. In a toothpaste with high foaming ability containing at least one surfactant, the improvement comprising including in the toothpaste about 1 to 10% by weight of a gelatin soluble in cold water, a gelatinous eggwhite product soluble in cold water, or a mixture thereof, about 1 to 2.5% by weight of surfactant, and a sufficient amount of a foam coloring agent for optical cleaning control so that at the beginning of brushing of the teeth a colored foam is produced which after at least 20 seconds of brushing shows foam decolorization by a brightness difference ΔL in the range of about 10 to 30 with the brightness L=0 for black and L=100 for white, and the foam is subsequently decolored to white or a faintly colored condition.

4,301,142

METHOD AND REAGENT FOR THE DETECTION OF INFECTIOUS MONONUCLEOSIS AND PREPARATION THEREOF

Burkhard Enders, Marburg an der Lahn, Fed. Rep. of Germany, assignor to Behringwerke Aktiengesellschaft Marburg/Lahn, Fed. Rep. of Germany

Filed Nov. 1, 1979, Ser. No. 90,258

Claims priority, application Fed. Rep. of Germany, Nov. 4, 1978, 2847877

Int. Cl.³ G01N *33/54, 33/58*

U.S. Cl. 424—8 **6 Claims**

1. A method for testing for the presence of antibodies of infectious mononucleosis in a body fluid, which method comprises combining the body fluid to be tested with horse erythrocytes which have been treated with sulfosalicylic acid in an amount sufficient such that the color of the erythrocytes turns from red to brown, and observing for agglutination indicating the presence of said antibodies.

4,301,143

DENTAL CREAM COMPOSITION

Giacinto G. Barberio, Flixton, England, assignor to Colgate-Palmolive Company, New York, N.Y.

Division of Ser. No. 104,497, Dec. 17, 1979, Pat. No. 4,264,580, which is a continuation of Ser. No. 32,077, Apr. 23, 1979, abandoned. This application Nov. 20, 1980, Ser. No. 209,231

Int. Cl.³ A61K *7/16*

U.S. Cl. 424—57 **6 Claims**

1. A dental cream consisting essentially of a vehicle of water and humectant and a gelling agent, from 20 to 75% by weight of a polishing material wherein at least about 95% by weight of said polishing material is calcium carbonate, from 0.1 to 5% by weight of a surface active material including sodium lauryl sulphate having a broad distribution of alkyl groups, the C_{10} content being about 1 to 8% by weight, the C_{12} content being

about 40 to 70% by weight, the C_{14} content being about 13 to 30% by weight, the C_{16} content being about 5 to 16% by weight and the C_{18} content being about 0 to 23% by weight, and from 0.2 to 1% by weight of an additive of an M_4 pyrophosphate wherein M is alkali metal or ammonium.

4,301,144
BLOOD SUBSTITUTE CONTAINING MODIFIED HEMOGLOBIN

Yuji Iwashita, Kawasaki, and Katsumi Ajisaka, Yokohama, both of Japan, assignors to Ajinomoto Company, Incorporated, Tokyo, Japan

Filed Jul. 10, 1980, Ser. No. 167,360
Claims priority, application Japan, Jul. 11, 1979, 54-87910
Int. Cl.³ A61K *31/74, 37/00*

U.S. Cl. 424—78 **7 Claims**

1. An oxygen carrying material which comprises hemoglobin attached by a chemical reaction to a polymer selected from the group consisting of polyethylene glycol, polypropylene glycol, a copolymer of ethylene glycol with propylene glycol, an ether of one of the above polyethylene glycols with an alcohol having a carbon number of 1 to 16, an ester of one of the above polyalkylene glycols with a carboxylic acid having a carbon number of 2 to 18, and a dehydrated prodnct of one of the above polyalkylene glycols with an amine having a carbon number of 1 to 18.

4,301,145
ANTISEPTIC SKIN CREAM

Joseph E. Cestari, 41 Causeway, Lawrence, N.Y. 11559

Filed Jul. 28, 1980, Ser. No. 172,777
Int. Cl.³ A61K *31/79, 33/18*

U.S. Cl. 424—80 **7 Claims**

1. An antiseptic dermatological cream composition comprising:

povidone iodine as an active cidal agent in an amount between about 5% and about 20% by weight of the total composition;

sodium citrate as a decolorizing agent in an amount between about 0.2% and about 2% by weight of said composition;

glycerine in an amount between about 10% and about 15% by weight of said composition;

a solvent selected from the group consisting of stearyl alcohol and cetyl alcohol in an amount between about 4% and about 12% by weight of said composition;

a perservative selected from the group consisting of propyl paraben and methyl paraben in an amount between about 0.1% and about 0.5% by weight of said composition;

sodium lauryl sulfate as an emulsifier in an amount between about 2% and about 10% by weight of said composition; and

an ointment petroleum base in an amount up to about 85% by weight of said composition.

4,301,146
STABILIZATION OF 16-OXYGENATED PROSTANOIC ACID DERIVATIVES

Dilip R. Sanvordeker, Elk Grove Village, Ill., assignor to G. D. Searle & Co., Skokie, Ill.

Filed Jul. 29, 1980, Ser. No. 173,292
Int. Cl.³ A61K *31/74, 31/215, 31/19*

U.S. Cl. 424—80 **22 Claims**

1. A stable solid dispersion of the compound ±methyl(7-[3(α)-hydroxy-2-β-(4(RS)-4-hydroxy-4-methyl-trans-1-octen-1-yl)-oxycyclopent-1α-yl]heptanoate, said solid dispersion comprising from about 50 to about 500 parts of a polymer selected from the group consisting of hydroxypropylmethyl cellulose and polyvinylpyrolidone per part of said compound.

4,301,147
DISPERSAL OF PATHOGENIC MATERIAL FOR PEST CONTROL

David A. Skadeland, Rte. 5, Planatation Rd., Fayetteville, Ga. 30214

Filed Jun. 26, 1978, Ser. No. 918,723
Int. Cl.³ A01N *25/00, 63/00*

U.S. Cl. 424—93 **2 Claims**

1. In the method of controlling Japanese beetles wherein the ground is innoculated with spore dust, said spore dust comprising an inert dust and spores for causing milky disease in the larvae of Japanese beetles, larvae of Japanese beetles ingest said spores and die from milky disease, the improvement including the steps of luring adult Japanese beetles into a container with bait, directing said adult Japanese beetles into a sufficient quantity of said spore dust that said adult Japanese beetles are substantially immersed in said spore dust, and allowing said adult Japanese beetles to escape from said quantity of spore dust and act as a carrier to distribute the spore dust that clings to said adult Japanese beetles to effect said innoculation of the ground.

4,301,148
ANTICOCCIDIAL DRUG

Kenji Shibata, Ohi, and Masami Ozima, Kawagoe, both of Japan, assignors to Nisshin Flour Milling Co., Ltd., Tokyo, Japan

Filed Sep. 22, 1980, Ser. No. 189,219
Claims priority, application Japan, Sep. 29, 1979, 54-124726
Int. Cl.³ A61K *39/012*

U.S. Cl. 424—93 **1 Claim**

1. In a method for preventing fowl coccidiosis caused by *Eimeria tenella*, the improvement which comprises inoculating newly hatched fowl through the cloaca with an anticoccidial intra-cloacally effective amount of from 500 to 10,000 sporozoites of *Eimeria tenella* suspended in a suitable buffered saline carrier.

4,301,149
PHARMACEUTICAL COMPOSITIONS

Patrick J. Crowley, Worthing, England, assignor to Beecham Group Limited, England

Continuation of Ser. No. 949,028, Oct. 6, 1978, abandoned. This application Jan. 25, 1980, Ser. No. 115,418
Claims priority, application United Kingdom, Oct. 11, 1977, 42191/77
Int. Cl.³ A61K *35/00*

U.S. Cl. 424—114 **4 Claims**

1. A process for the production of a dry unit-dosage pharmaceutical composition suitable for oral administration each dosage unit of which comprises 20 mg to 1500 mg of amoxycillin trihydrate, 20 mg to 500 mg of potassium clavulanate and a pharmaceutically acceptable carrier, which comprises mixing potassium clavulanate and amoxycillin trihydrate in a weight ratio of 1:5 to 1:2 with a pharmaceutically acceptable carrier in an atmosphere containing less than 30% relative humidity and forming the mixture into a suitable dry unit-dosage pharmaceutical composition.

4,301,150
METHOD OF TREATING THE CLINICAL MANIFESTATIONS OF VIRAL DISEASES

Emanuel Revici, New York, N.Y., assignor to The Vinoxen Company, Houston, Tex.

Continuation of Ser. No. 852,946, Nov. 18, 1977, abandoned, which is a continuation of Ser. No. 597,179, Jul. 18, 1975, abandoned. This application Dec. 11, 1979, Ser. No. 102,487
Int. Cl.³ A61K *33/42, 33/02*

U.S. Cl. 424—128 **12 Claims**

1. A method of treating or alleviating the clinical manifestations of viral diseases which exhibit local alkalosis, said manifestations including rhinorrhea, tracheal or bronchial secretions, which comprises internally administering to a patient having said viral disease a sufficient amount of a non-toxic, water soluble acidic ammonium salt of phosphoric acid or sulfuric acid to effectively neutralize the alkalosis and eliminate or alleviate said clinical manifestations.

4,301,151
LONG-LASTING AGONISTS OF ENKEPHALIN

Daniel F. Veber, Ambler, and Roger M. Freidinger, Hatfield, both of Pa., assignors to Merck & Co., Inc., Rahway, N.J.

Division of Ser. No. 97,758, Nov. 27, 1979. This application Sep. 15, 1980, Ser. No. 187,290
Int. Cl.³ A61K *37/00;* **A01N** *43/84;* **A61K** *31/44, 31/40*

U.S. Cl. 424—177 **1 Claim**

1. A method of treating pain comprising administering to a patient in need of such treatment, a therapeutically effective amount of a peptide of the formula:

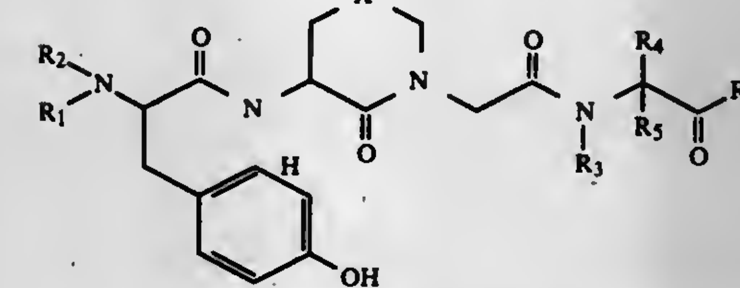

where, unless otherwise indicated, an amino acid substitutent identified below has the "S-" stereoconfiguration:

X is S or $(CH_2)_n$, where n is 0, 1 or 2;

R_1 is hydrogen; C_{1-6} alkyl; H-Arg; or H-Lys-Arg;

R_2 is hydrogen; C_{1-6} alkyl; or, when R_1 is hydrogen, may be allyl or cyclopropylmethyl;

R_3 is hydrogen or methyl;

R_4 is benzyl; benzyl substituted with halo, nitro, hydroxy, amino, C_{1-4} alkyl, or cyano; indolylmethyl; imidazolylmethyl; or isopropylmethyl;

R_5 is hydrogen or methyl;

R_4 and R_5 taken together are phenylmethylene; and

R_6 is (a) OM, where M is hydrogen, C_{1-6} alkyl, or a cation; (b) NR_7R_8, where R_7 and R_8 are independently selected from the group consisting of hydrogen; C_{1-6} alkyl, and, when either of R_7 or R_8 is hydrogen, $-CH_2CH_2N(CH_3)_2$ and

$$-CH_2CH_2\overset{\overset{O}{\uparrow}}{N}(CH_3)_2;$$

(c) Met-OH; (d) Met-NH_2; (e) Met-ol; (f) D-Met-NH_2; (g) N-methyl-Met-NH_2; (h) Met(O)-NH_2; (i) Met(O)-ol; (j) Leu-NH_2; (k) N-methyl-Leu-NH_2; (l) D-Leu-NH_2; or (m) Pro-NH_2.

4,301,152
IMMUNOLOGIC ADJUVANT

Mitree M. Ponpipom, Branchburg, N.J., assignor to Merck & Co., Inc., Rahway, N.J.

Filed Oct. 26, 1979, Ser. No. 88,692
Int. Cl.³ A61K *31/575;* **C07J** *9/00*

U.S. Cl. 424—182 **9 Claims**

6. An immunologic adjuvant compound selected from 6-(5-cholesten-3β-yloxy)hexyl 6-amino-6-deoxy-1-thio-β-D-galactopyranoside and the corresponding oleic acid amide thereof.

9. A composition comprising a compound of claim 6 in an amount effective to exert an adjuvant effect and a pharmaceutically acceptable carrier.

4,301,153
HEPARIN PREPARATION

Robert D. Rosenberg, Brookline, Mass., assignor to Riker Laboratories, Inc., St. Paul, Minn.

Division of Ser. No. 779,691, Mar. 21, 1977, abandoned. This application Mar. 30, 1978, Ser. No. 891,706
Int. Cl.³ A61K *35/14, 31/725;* **C08B** *37/10*

U.S. Cl. 424—183 **7 Claims**

1. A process for producing heparin characterized by elevated anticoagulant activity, said process comprising the steps of:

A. providing a heparin preparation of animal tissue origin which exhibits molecular heterogeneity and anticoagulant activity;

B. providing AT cofactor extracted from mammalian plasma;

C. incubating the heparin preparation with the AT cofactor to complex a portion of the heparin with the cofactor;

D. separating a complex of heparin and cofactor from the remainder of the heparin preparation; and,

E. separating the cofactor from the complex to produce heparin having improved anticoagulant activity.

5. A potentiated heparin preparation prepared from heparin of animal tissue origin which has been complexed with AT cofactor, separated from heparin uncomplexed with AT cofactor, and separated from the heparin AT cofactor complex to yield a heparin preparation having greater anticoagulant activity than heparin from the animal tissue origin.

6. A process for inhibiting coagulation of blood, said process comprising the steps of:

A. providing a heparin preparation of animal tissue origin which exhibits molecular heterogeneity and anticoagulant activity;

B. providing AT cofactor extracted from mammalian plasma;

C. incubating the heparin preparation with the AT cofactor to complex a portion of the heparin with the cofactor;

D. separating a complex of heparin and cofactor from the remainder of the heparin preparation;

E. separating the cofactor from the complex to produce heparin having improved anticoagulant activity; and,

F. mixing the potentiated heparin with blood.

4,301,154
INSECTICIDAL SYNERGISTIC MIXTURES OF 0,0-DIETHYL 0-(3,5,6-TRICHLORO-2-PYRIDINYL)PHOSPHOROTHIOATE AND 3-(2,2-DICHLOROETHENYL)-2,2-DIMETHYLCYCLOPROPANE CARBOXYLIC ACID:CYANO(6-PHENOXY-2-PYRIDINYL)METHYL ESTER

Larry L. Larson, Concord, Calif., assignor to The Dow Chemical Company, Midland, Mich.

Filed Oct. 1, 1979, Ser. No. 80,960
Int. Cl.³ A01N *43/40, 57/00, 57/26*

U.S. Cl. 424—200 **7 Claims**

1. A synergistic insecticidal composition which comprises an inert carrier and an insecticidally effective amount of an active mixture of toxicants consisting essentially of about 1 part by weight of O,O-diethyl O-(3,5,6-trichloro-2-pyridinyl)phosphorothioate and from about 1/133 to about 1 part by weight of 3-(2,2-dichloroethenyl)-2,2-dimethylcyclopropane carboxylic acid:cyano(6-phenoxy-2-pyridinyl)methyl ester.

4,301,155

INSECTICIDAL SYNERGISTIC MIXTURES OF O,O-DIETHYL O-(3,5,6-TRICHLORO-2-PYRIDINYL)PHOSPHOROTHIOATE AND 2,2,3,3-TETRAMETHYLCYCLOPROPANECARBOXYLIC ACID:CYANO(3-PHENOXYPHENYL)METHYL ESTER

Larry L. Larson, Concord, Calif., assignor to The Dow Chemical Company, Midland, Mich.

Filed Oct. 1, 1979, Ser. No. 80,961

Int. Cl.³ A01N *37/34, 57/00, 57/26*

U.S. Cl. 424—200 **7 Claims**

1. A synergistic insecticidal composition which comprises an inert carrier and an insecticidally effective amount of an active mixture of toxicants consisting essentially of about 1 part by weight of O,O-diethyl O-(3,5,6-trichloro-2-pyridinyl)phosphorothioate and from about $\frac{1}{4}$ to about 4 parts by weight of 2,2,3,3-tetramethylcyclopropanecarboxylic acid:cyano(3-phenoxyphenyl)methyl ester.

4,301,156

INSECTICIDAL SYNERGISTIC MIXTURES OF O,O-DIETHYL O-(3,5,6-TRICHLORO-2-PYRIDINYL) PHOSPHOROTHIOATE AND 4-CHLORO-α-(1-METHYLETHYL)BENZENEACETIC ACID:CYANO (6-PHENOXY-2-PYRIDINYL)METHYL ESTER

Larry L. Larson, Concord, Calif., assignor to The Dow Chemical Company, Midland, Mich.

Filed Oct. 1, 1979, Ser. No. 80,969

Int. Cl.³ A01N *43/40, 57/00, 57/26*

U.S. Cl. 424—200 **7 Claims**

1. A synergistic insecticidal composition which comprises an inert carrier and an insecticidally effective amount of an active mixture of toxicants consisting essentially of about 1 part by weight of O,O-diethyl O-(3,5,6-trichloro-2-pyridinyl)phosphorothioate and from about 1/33 to about $\frac{1}{2}$ part by weight of 4-chloro-α-(1-methylethyl)-benzeneacetic acid:cyano(6-phenoxy-2-pyridinyl)methyl ester.

4,301,157

THIOLPHOSPHORIC ACID-S-4-NITRO-2-TRICHLOROMETHYLPHENYL ESTERS AS FUNGICIDES

Helmut Hagen, Frankenthal; Ernst-Heinrich Pommer, Limburgerhof; Wolfgang Reuther, Heidelberg, and Hans Ziegler, Frankenthal, all of Fed. Rep. of Germany, assignors to BASF Aktiengesellschaft, Fed. Rep. of Germany

Filed Oct. 2, 1979, Ser. No. 81,060

Claims priority, application Fed. Rep. of Germany, Oct. 18, 1978, 2845329

Int. Cl.³ A01N *57/06;* **C07F** *9/165*

U.S. Cl. 424—218 **4 Claims**

1. A tholphosphoric acid-S-4-nitro-2-trichloromethylphenyl ester of the formula

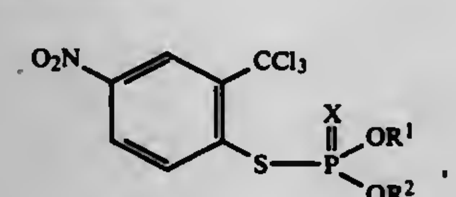

I

where X denotes oxygen or sulfur, and R^1 and R^2 are identical or different and each denotes unsubstituted alkyl groups of 1 to 18 carbon atoms, substituted alkyl groups of 1 to 18 carbon atoms containing as substituents halogen or alkoxyl of 1 to 4 carbon atoms and unsubstituted cycloalkyl radicals of 5 to 18 carbon atoms and substituted cycloalkyl radicals of 5 to 18 carbon atoms containing as substituents halogen or alkoxyl of 1 to 4 carbon atoms.

2. A fungicidal composition comprising a liquid or solid diluent and a fungicidally effective amount of at least one compound as set forth in claim 1.

4,301,158

N-(2-PROPYNYL)-2,6-DINITRO-BENZENAMINE DERIVATIVES

Homer K. Spencer, Randolph, N.J., assignor to Sandoz, Inc., East Hanover, N.J.

Filed Apr. 11, 1980, Ser. No. 139,435

Int. Cl.³ A01N *41/06, 37/34, 33/18;* **C07C** *87/00*

U.S. Cl. 424—228 **15 Claims**

1. A compound of the formula:

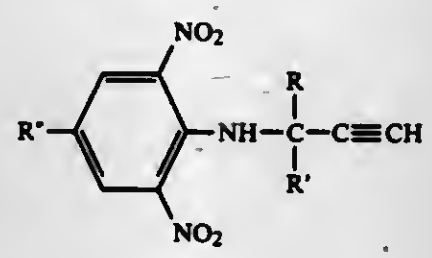

I

wherein

R and R' are each independently alkyl of 1 to 4 carbon atoms,

R* is trihalomethyl in which the halo atoms are of atomic weight of from 18 to 36, cyano or $—SO_2NR''R'''$, and

R'' and R''' are each independently hydrogen or alkyl of 1 to 4 carbon atoms, and

9. The method of combatting phytopathogenic fungus in a plant locus comprising applying to said locus a fungicidally effective amount of a compound of claim 1.

4,301,159

N-(DIETHYLAMINOETHYL)-2-ALKOXY-BENZAMIDE DERIVATIVES

Masaru Ogata, Kobe; Hiroshi Matsumoto, Ibaraki; Katsumi Hirose, Kishiwada, and Masami Eigyo, Kawanishi, all of Japan, assignors to Shionogi & Co., Ltd., Osaka, Japan

Filed Jun. 20, 1980, Ser. No. 161,492

Int. Cl.³ C07C *143/74;* **A61K** *31/25*

U.S. Cl. 424—230 **5 Claims**

1. A compound of the formula:

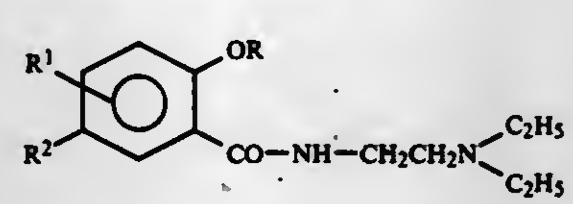

wherein

R is C_1–C_5 alkyl;

R^1 is hydrogen, halogen, C_1–C_5 alkyl or C_1–C_5 alkoxy;

R^2 is

$$R^4—\overset{|}{N}—SO_2R^3;$$

R^3 is C_1–C_5 alkyl or C_2–C_{10} dialkylamino, and

R^4 is hydrogen or C_1–C_5 alkyl

or a pharmaceutically acceptable acid addition salt thereof.

4,301,160

READY FOR USE, INJECTABLE, AQUEOUS SOLUTIONS OF ALKALI METAL SALTS OF CANRENOIC ACID AND FUROSEMIDE AND PROCESS FOR THEIR PREPARATION

Richard Leeb, Kelkheim, and Rainer J. Helbig, Frankfurt am Main, both of Fed. Rep. of Germany, assignors to Hoechst Aktiengesellschaft, Frankfurt am Main, Fed. Rep. of Germany

Filed Dec. 16, 1980, Ser. No. 216,957

Claims priority, application Fed. Rep. of Germany, Dec. 18, 1979, 2950832

Int. Cl.³ A61K *31/58*

U.S. Cl. 424—241 **5 Claims**

1. Ready for use, injectable, aqueous solution of a pH of from 10.2 to 11.2, characterized in that it contains a mixture of an alkali metal salt of canrenoic acid and furosemide without addition of a buffer.

4,301,161

CEPHALOSPORIN DERIVATIVES

Nobuhiro Oi, Hoya; Bunya Aoki, Tama; Teizo Shinozaki, Matsudo; Kanji Moro, Kuki; Isao Matsunaga, Tokyo; Takao Noto, Machida; Toshiyuki Nebashi, Kawagoe; Yusuke Harada, Tokyo; Hisao Endo, Yokohama; Takao Kimura, Higashi; Hiroshi Okazaki, Sayama; Haruki Ogawa, Chofu, and Minoru Shindo, Tokyo, all of Japan, assignors to Chugai Seiyaku Kabushiki Kaisha, Tokyo, Japan

Division of Ser. No. 47,781, Jun. 11, 1979. This application Mar. 28, 1980, Ser. No. 136,062

Claims priority, application Japan, Sep. 17, 1979, 53-74868

Int. Cl.³ C07D *501/20*

U.S. Cl. 424—246 **5 Claims**

1. A cephalosporin derivative represented by the formula

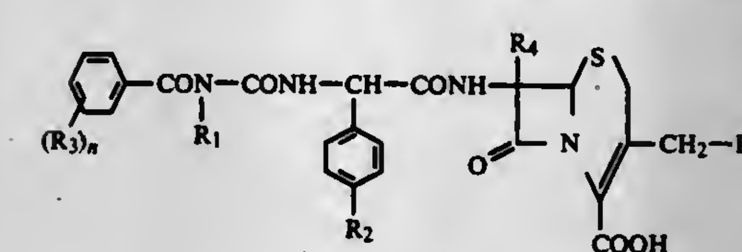

(I)

wherein R_1 is a hydrogen atom or a lower alkyl group; R_2 is a hydrogen atom or a hydroxyl group; R_3 is a hydroxyl group or a lower alkanoyloxyl group; n is 2 or 3; at least two of R_3 are bonded to adjacent carbon atoms, the position of substituent R_3 being selected from 3 to 5 position when R_1 is a lower alkyl group and R_3 is a hydroxyl group, and 2 to 6 position when R_1 and R_3 are other substituents; R_4 is a hydrogen atom; and R_5 is an acetoxyl group or a pharmaceutically acceptable salt thereof.

4,301,162

ANTIBACTERIAL AND ANTIFUNGAL COMPOSITION

Masayasu Hasegawa, Kyoto; Hideo Nishikawa, Ibaraki, and Kayoko Yoshida, Takatsuki, all of Japan, assignors to Nippon Gohsei Kagaku Kogyo Kabushiki Kaisha, Osaka, Japan

Continuation-in-part of Ser. No. 58,446, Jul. 18, 1979, Pat. No. 4,242,336. This application Jun. 26, 1980, Ser. No. 163,161

Int. Cl.³ A01N *37/06, 43/02, 43/40, 55/02*

U.S. Cl. 424—263 **2 Claims**

1. An antibacterial and antifungal composition comprising a mixture of (A) 60% to 99.5% by weight, based on the total weight of the composition, of at least one member selected from the group consisting of dehydroacetic acid and its alkali metal salts and (B) 0.5% to 40% by weight, based on the total weight of the composition, of at least one member selected from the group consisting of 2-pyridinethiol 1-oxide and its salts.

4,301,163

AMINO-ETHER OXIDES AND USE THEREOF IN THERAPY

Dieran R. Torossian, Bourg-la-Reine; Claude P. Roux, Paris, and Gilbert G. Aubard, Palaiseau, all of France, assignors to Societe Industrielle de Produits de Synthese, Avrille, France

Filed Jul. 1, 1980, Ser. No. 164,931

Claims priority, application France, Jul. 11, 1979, 79 17986

Int. Cl.³ A61K *31/44, 31/13;* **C07C** *87/28;* **C07D** *213/36*

U.S. Cl. 424—263 **9 Claims**

1. Amino-ether oxide of formula:

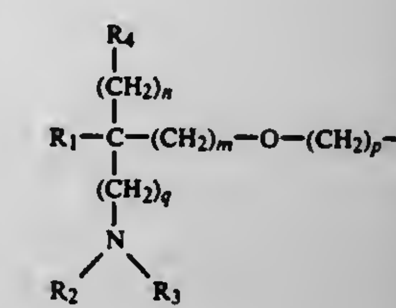

(I)

in which:

R_1 is lower alkyl,

R_2 and R_3 which are the same or different are hydrogen or lower alkyl,

R_4 is a phenyl or phenoxy nucleus optionally monosubstituted to trisubstituted by substituents which are the same or different, halogen or lower alkoxy,

R_5 is a phenyl radical optionally monosubstituted to trisubstituted by substituents which are the same or different, halogen, lower alkyl, lower alkoxy or nitro, a pyridyl radical or a lower alkyl radical,

n is equal to zero, 1 or 2,

m and q are equal to 0 or 1,

p is an integer from 0 to 9 with the proviso that n, m and p are not all equal to 0 when q is equal to 1, and its acid addition salts.

9. Pharmaceutical agent having antispasmodic, anesthetic and analgesic activities, comprising a physiologically acceptable excipient and an effective amount of an amino-ether oxide of formula:

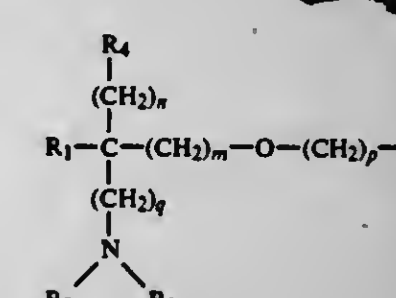

(I)

in which:

R_1 is lower alkyl,

R_2 and R_3 which are the same or different are hydrogen or lower alkyl,

R_4 is a phenyl or phenoxy nucleus optionally monosubstituted to trisubstituted by substituents which are the same or different, halogen or lower alkoxy,

R_5 is a phenyl radical optionally monosubstituted to trisubstituted by substituents which are the same or different, halogen, lower alkyl, lower alkoxy or nitro, a pyridyl radical or a lower alkyl radical,

n is equal to zero, 1 or 2,

m and q are equal to 0 or 1,

p is an integer from 0 to 9 with the proviso that n, m and p are not all equal to 0 when q is equal to 1 and its pharmaceutically acceptable acid addition salts.

4,301,164

5,6,7-TRINOR-4,8-INTER-M-PHENYLENE PGI_2 DERIVATIVES

Kiyotaka Ohno, Fujisawa; Hisao Nishiyama, Toyohashi, and Shintaro Nishio, Ebina, all of Japan, assignors to Toray Industries, Inc., Tokyo, Japan

Filed Sep. 3, 1980, Ser. No. 183,745
Claims priority, application Japan, Sep. 3, 1979, 54-111709
Int. Cl.[3] **A61K** *31/557, 31/34;* **C07D** *307/93*
U.S. Cl. 424—263 **33 Claims**

1. A compound of the formula

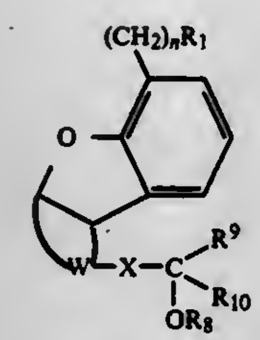

wherein R_1 is (a) carboxyl group, (b) its salt, (c) its ester, (d) its amide or (e) $—CH_2OH$, n is an integer of from 1 to 3, W is

(a) $-CH_2-CH=C\!<$,

(b) $-CH_2-CH_2-CH\!<$ or (c) $-CH_2-\underset{\substack{|\\ OR_8}}{CH}-CH\!<$

wherein R_8 is hydrogen, acyl of 1 to 12 carbon atoms, tetrahydropyranyl, tetrahydrofuranyl or 1-ethoxyethyl, X is

(a) $-CH_2CH_2-$ or (b) 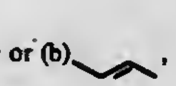

R_9 is (a) hydrogen or (b) alkyl of 1 to 4 carbon atoms, R_{10} is (a) straight alkyl of 4 to 12 carbon atoms,

(b) 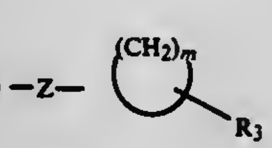

wherein Z is a valence bond or alkylene of 1 to 5 carbon atoms, m is an integer of from 5 to 12, R_3 is hydrogen or alkyl of 1 to 5 carbon atoms, or (c) $—Z—Ar_2$ wherein Z is as defined above, Ar_2 is phenyl, α-naphthyl, β-naphthyl or phenyl substituted by at least one chloro, bromo, fluoro, trifluoromethyl, alkyl of 1 to 4 carbon atoms, nitro, methoxy, phenyl or phenoxy.

31. A pharmaceutical composition for use as an anti-ulceric drug comprising a compound of claim 1 in association with a pharmaceutically acceptable carrier in sufficient amount to provide from about 0.1 to about 100 mg of said compound per dose.

4,301,165

PHARMACOLOGICALLY ACTIVE COMPOUNDS

Graham J. Durant, and Charon R. Ganellin, both of Welwyn Garden City, England, assignors to Smith Kline & French Laboratories Limited, Welwyn Garden City, England

Division of Ser. No. 941,836, Sep. 11, 1978, Pat. No. 4,197,305, which is a division of Ser. No. 836,626, Sep. 26, 1977, Pat. No. 4,137,319, which is a division of Ser. No. 678,564, Apr. 20, 1976, Pat. No. 4,070,472, which is a division of Ser. No. 542,971, Jan. 22, 1975, Pat. No. 3,968,227. This application Aug. 30, 1979, Ser. No. 70,950
Claims priority, application United Kingdom, Feb. 7, 1974, 5596/74
Int. Cl.[3] **C07D** *249/04, 249/08*
U.S. Cl. 424—269 **13 Claims**

1. A compound of the formula:

$$R_1NH-\overset{\overset{X_1}{\|}}{C}-W-(CH_2)_q-W-\overset{\overset{X_2}{\|}}{C}-NHR_2$$

wherein R_1 and R_2, which may be the same or different, each represent a grouping of the structure:

$$Het-(CH_2)_mZ-(CH_2)_n-$$

wherein Het is a nitrogen containing membered heterocyclic ring selected from imidazole, pyrazole or triazole which is optionally substituted by lower alkyl, hydroxyl, halogen or amino, except that R_1 and R_2 are not both imidazolyl containing groups; Z is sulphur or a methylene group; m is 0, 1 or 2; n is 2 or 3 and the sum of m and n is 3, 4 or when Y is other than hydrogen, methyl, or hydroxyl, 2; X_1 and X_2, which may be the same or different, are each sulphur, $CHNO_2$ or NY wherein Y is hydrogen, hydroxy, lower alkyl, cyano, $CONH_2$ or SO_2R_3; R_3 is lower alkyl, phenyl, tolyl, trifluoromethyl or amino; W is NH, and when X_1 and X_2 are NH, W may also be sulphur; and q is an integer from 2 to 8; or a pharmaceutically acceptable acid addition salt thereof.

4,301,166

HYDROXYETHYL-AZOLE COMPOUNDS, THEIR PRODUCTION AND THEIR MEDICINAL USE

Erik Regel; Karl H. Büchel; Ingo Haller, and Manfred Plempel, all of Wuppertal, Fed. Rep. of Germany, assignors to Bayer Aktiengesellschaft, Leverkusen, Fed. Rep. of Germany

Filed Nov. 9, 1979, Ser. No. 92,806
Claims priority, application Fed. Rep. of Germany, Nov. 25, 1978, 2851116
Int. Cl.[3] **A01N** *43/50, 43/82;* **C07D** *233/60, 249/08*
U.S. Cl. 424—269 **11 Claims**

1. A hydroxyethyl-azole of the formula

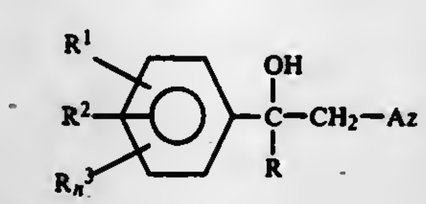

(I)

or a salt thereof
in which
- Az represents imidazol-1-yl, 1,2,4-triazol-1-yl or 1,2,4-triazol-4-yl,
- R denotes optionally substituted phenyl, naphthyl or tetrahydronaphthyl which is unsubstituted or substituted by halogen, C_1-C_4-alkyl, C_1-C_4-alkoxy or halogenoalkyl with 1 to 4 carbon atoms and up to 5 halogen atoms,
- R^1 represents phenyl which is unsubstituted or substituted by halogen or C_1-C_4-alkyl and
- R^2 represents hydrogen, or
- R^1 and R^2 together, in the o-position relative to one another, represent an optionally halogen or C_1-C_4-alkyl substituted methylene bridge with 3 to 5 methylene groups, or, together with the phenyl ring, represent naphthyl,
- R^3 represents halogen, an alkyl, or alkoxy group with in each case 1 to 4 carbon atoms or halogenoalkyl with 1 to 4 carbon atoms and up to 5 halogen atoms and
- n is 0, 1, 2 or 3.

9. A method of combating mycoses in warm-blooded animals which comprises administering to the animals an antimycotically effective amount of an active compound according to claim 1 either alone or in admixture with a diluent or in the form of a medicament.

4,301,167

2-AMINO THIAZOLINE DERIVATIVES

Andre L. Boncherle, La Tronche, and Marie-Pierre D. Viallet, Grenoble, both of France, assignors to Institut Merieux, Lyons, France

Filed Jun. 6, 1979, Ser. No. 116,304
Claims priority, application France, Oct. 24, 1977, 77 31933
Int. Cl.[3] **C07D** *277/18*
U.S. Cl. 424—270 **13 Claims**

1. 2-amino thiazoline derivative having the Formula I:

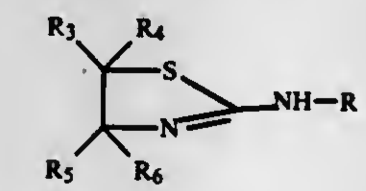

(I)

wherein:

R represents $—R_1$ or $—CO—R_2$, wherein R_1 represents benzyl monosubstituted in the ortho position by lower alkoxy or in the ortho, meta or para position by lower alkyl, trifluoromethyl or halogen, or R_1 represents cycloalkylmethyl wherein the cycloalkyl moiety has 5 or 6 chains; and R_2 represents cycloalkyl, naphthyl, styryl or substituted phenyl, the phenyl moiety being monosubstituted or disubstituted by halogen, lower alkyl, lower alkoxy, trifluoromethyl or nitro; and R_3, R_4, R_5 and R_6, each independently represent hydrogen or lower alkyl group.

4,301,168

TETRAHYDROPYRIDYL DERIVATIVES OF CLAVULANIC ACID, A PROCESS FOR THEIR PREPARATION AND THEIR USE

Ireoe Stirling, Reigate, and Brian P. Clarke, Kingswood, both of England, assignors to Beecham Group Limited, England

Filed Aug. 22, 1979, Ser. No. 68,646
Claims priority, application United Kingdom, Sep. 9, 1978, 36268/78
Int. Cl.[3] **A61K** *31/44;* **C07D** *498/04;* **A61K** *31/42*
U.S. Cl. 424—272 **75 Claims**

1. A compound of the formula (I):

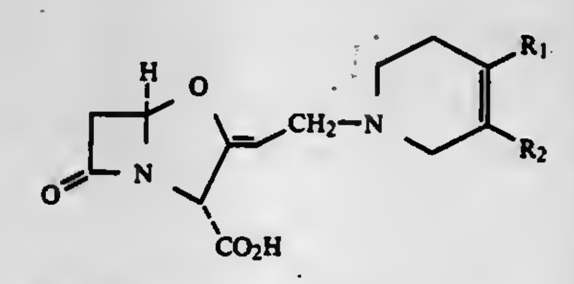

(I)

a zwitterion of the formula (II)

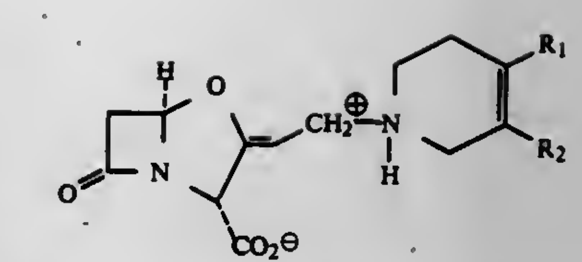

(II)

or an ester thereof, or an acid addition salt of such an ester of the formula (III) or (IV):

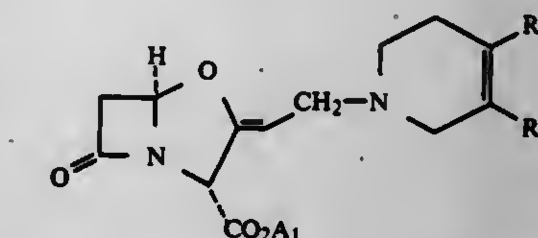

(III) or

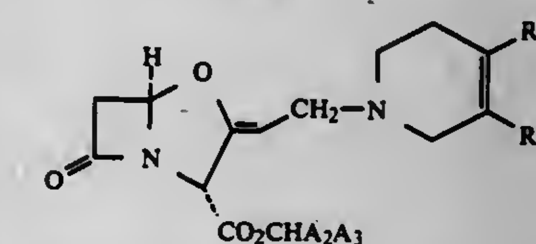

(IV)

wherein R_1 is lower alkyl or phenyl and R_2 is hydrogen or R_2 together with R_1 and the carbon atoms to which they are attached form a benzene ring, A_1 is alkyl of 1 to 6 carbon atoms unsubstituted or substituted by alkoxyl or alkanoyloxy of 1 to 7 carbon atoms, phthalidyl, tetrahydropyranyl or tetrahydrofuranyl, A_2 is alkenyl or alkynyl of up to 5 carbon atoms or phenyl unsubstituted or substituted by fluoro, chloro, bromo, nitro, alkyl of up to 4 carbon atoms or alkoxyl of up to 4 carbon atoms; and A_3 is hydrogen, alkyl of up to 4 carbon atoms, or phenyl unsubstituted or substituted by fluoro, chloro, bromo, nitro, alkyl of up to 4 carbon atoms or alkoxyl of up to 4 carbon atoms.

9. A pharmaceutical composition useful for treating bacterial infections in mammals including humans which comprises an antibacterially effective amount of an ester of the formula (III):

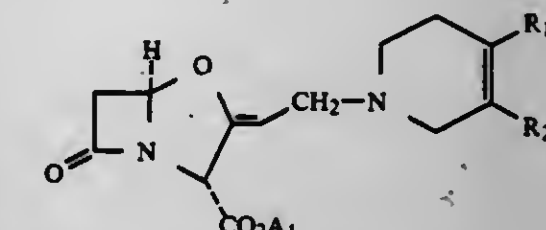

(III)

wherein R_1 is lower alkyl or phenyl, R_2 is hydrogen or R_2 together with R_1 and the carbon atoms to which they are attached form a benzene ring and A_1 is of the formula (c), (d) or (e):

$$—CHA_5—OA_6 \quad (c),$$

$$—CHA_5—COA_6 \quad (d) \text{ or}$$

$$—CHA_5—CO_2A_6 \quad (e)$$

wherein A_5 is hydrogen or methyl, A_6 is alkyl of up to 4 carbon atoms or phenyl or benzyl, said phenyl or benzyl being unsubstituted or substituted by 1 or 2 alkyl or alkoxyl moieties of up to 3 carbon atoms or by fluoro, chloro, bromo or nitro; or A_5 is joined to A_6 to form an ortho-phenylene moiety which orthophenylene ring is unsubstituted or substituted by 1 or 2

alkyl or alkoxyl moieties of up to 3 carbon atoms or by fluoro, chloro, bromo or nitro as the sole antibacterial agent, in combination with a pharmaceutically acceptable carrier.

4,301,169
NOVEL IMIDAZOLE COMPOUND AND ANTI-DEPRESSING AGENT CONTAINING THE SAME
Motosuke Yamanaka, Abiko; Isao Saito, Chofu; Kiyomi Yamatsu, Kamakura, and Takako Fujimoto, Yokohama, all of Japan, assignors to Eisai Co., Ltd., Tokyo, Japan
Filed Nov. 13, 1979, Ser. No. 93,469
Claims priority, application Japan, Nov. 14, 1978, 53-139325; Nov. 21, 1978, 53-142813
Int. Cl.^{3} A61K *31/415;* **C07D** *233/56*
U.S. Cl. 424—273 R **11 Claims**

1. A method for treating depression which comprises administering to a patient suffering from depression a pharmaceutical composition comprising a therapeutically effective amount of a compound having the formula

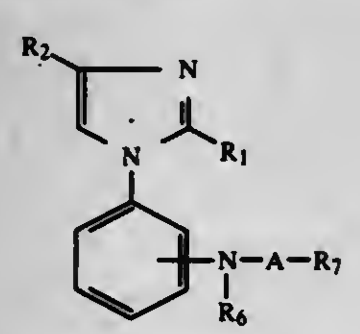

in which R_1 is lower alkyl, R_2 is hydrogen or lower alkyl, A is carbonyl or sulfonyl, R_6 is hydrogen, lower alkyl or lower alkylsulfonyl, R_7 is lower alkyl, halogenated lower alkyl, mono- or di-lower alkylamino, mono- or di-lower alkylaminoalkyl, phenyl, phenyl substituted with halogen, lower alkyl, lower alkoxy or trifluoromethyl, phenylamino, or phenylamino substituted with halogen, lower alkyl, lower alkoxy or trifluoromethyl, and pharmaceutically acceptable acid addition salts thereof, and a pharmaceutical carrier.

4,301,170
1-DIMETHYL SUBSTITUTED ALKYL-2-OR 4-SUBSTITUTED PHENYLIMIDAZOLES
William J. Houlihan, Mt. Lakes, N.J., assignor to Sandoz, Inc., East Hanover, N.J.
Continuation of Ser. No. 98,868, Nov. 30, 1979, abandoned, which is a continuation of Ser. No. 953,269, Oct. 20, 1978, abandoned, which is a continuation of Ser. No. 903,155, May 5, 1978, abandoned, which is a continuation-in-part of Ser. No. 861,993, Dec. 19, 1977, abandoned. This application Aug. 1, 1980, Ser. No. 174,718
Int. Cl.^{3} A61K *31/415;* **C07D** *233/58*
U.S. Cl. 424—273 R **9 Claims**

1. A compound of the formula

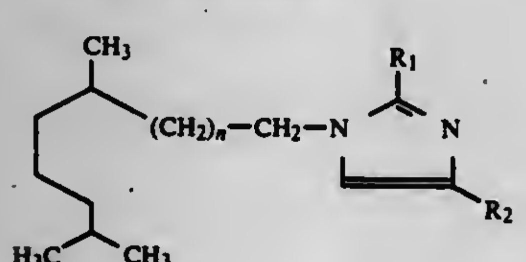

(I)

wherein

R_1 and R_2 each represent hydrogen, or

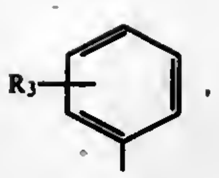

and

R_3 is hydrogen or fluoro, and

n is 1, 2 or 3, and

provided that one of R_1 and R_2 is other than hydrogen or a pharmaceutically acceptable acid addition salt thereof.

8. A method of treating obesity which comprises administering to a mammal in need of said treatment an antiobesity effective amount of a compound of claim 1.

4,301,171
2-(1,4-BENZODIOXAN-2-YLALKYL)BENZIMIDAZOLES USEFUL AS ANTI-DEPRESSANTS
Arthur F. Kluge, Los Altos; Arthur M. Strosberg, Portola Valley, both of Calif.; Roger Whiting, and George A. Christie, both of Edinburgh, Scotland, assignors to Syntex (U.S.A.) Inc., Palo Alto, Calif.
Filed Dec. 3, 1980, Ser. No. 212,287
Int. Cl.^{3} A61K *31/415;* **C07D** *491/056*
U.S. Cl. 424—273 B **12 Claims**

1. A compound of the formula

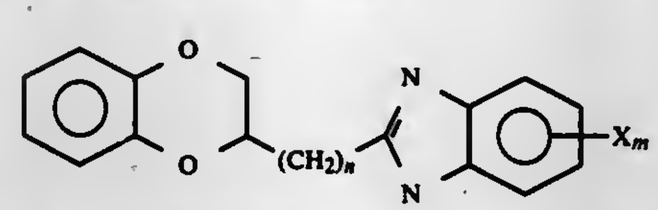

(I)

and the pharmaceutically acceptable, non-toxic salt thereof; wherein:

R is hydrogen, lower alkyl, or benzyl;

X is a substitution for hydrogen at any position in the benzene ring and is selected from the group consisting of lower alkyl, lower alkoxyl, benzyl and halo;

m is an integer from 0 to 4; and

n is an integer from 0 to 2.

12. A method for preventing, inhibiting or reducing depression in humans, which comprises administering to a subject in need of such treatment, an effective amount of, or a pharmaceutical composition containing an effective amount of, a compound of the formula

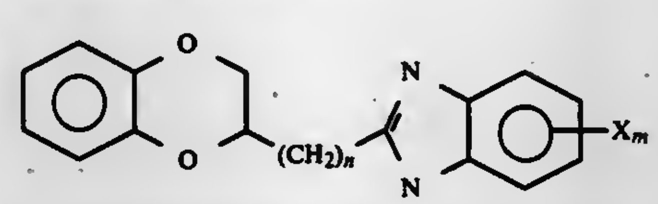

(I)

and a pharmaceutically acceptable, non-toxic salt thereof, wherein:

R is hydrogen, lower alkyl, or benzyl;

X is a substitution for hydrogen at any position in the benzene ring and is selected from the group consisting of lower alkyl, lower alkoxyl, benzyl and halo;

m is an integer from 0 to 4; and

n is an integer from 0 to 2.

4,301,172
METHOD OF INHIBITING LIPOGENESIS
George R. Haynes, Houston, Tex., assignor to Shell Oil Company, Houston, Tex.
Division of Ser. No. 115,464, Jan. 25, 1980. This application Dec. 15, 1980, Ser. No. 216,101
Int. Cl.^{3} A61K *31/38*
U.S. Cl. 424—275 **1 Claim**

1. A method of inhibiting lipogenesis in a mammal, which comprises administering, to a mammal in need of said treatment, orally or parenterally a lipogenesis inhibiting effective amount of a compound of the formula:

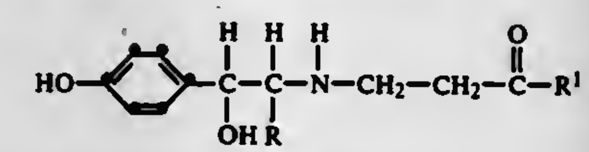

(I)

wherein R is methyl and R^1 is thienyl, benzothienyl, or dimethylthienyl, or their physiologically acceptable acid addition salts.

4,301,173
HORTICULTURAL COMPOSITION AND METHOD FOR CONTROLLING PLANT MITES
Hideyuki Imazaki, Osaka; Masazumi Fujikawa, Takatsuki, and Hiromitsu Kariya, Higashimurayama, all of Japan, assignors to Nitto Kasei Co., Ltd., Osaka and Kanesho Co., Ltd., Tokyo, both of, Japan
Filed Feb. 27, 1980, Ser. No. 125,278
Claims priority, application Japan, Mar. 2, 1979, 54-24753
Int. Cl.^{3} A01K *31/32*
U.S. Cl. 424—288 **12 Claims**

1. An horticultural composition for controlling plant mites comprising

(1) a nonphytotoxic horticulturally acceptable carrier, and

(2) as an essential active ingredient, a miticidally effective amount of a nonphytotoxic trialkyltin compound of the formula:

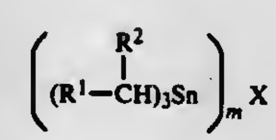

wherein R^1 represents a linear alkyl group having 6 to 11 carbon atoms, R^2 represents a hydrogen atom or a methyl group, provided that the sum of the number of carbon atoms of R^1 and R^2 is from 7 to 11, m is an integer of 1 or 2, and X is selected from the group consisting of chlorine, fluorine, hydroxyl, acetoxy, dithiocarbamate, laurylmercapto, when m is 1; and a member selected from the group consisting of oxygen, sulfur, and sulfate when m is 2, said trialkyltin tin compound being present in the composition in an amount of from about 20 to 3000 ppm.

4,301,174
FUNGICIDAL N-ACYL-S-HALOALKYL (OR S-HALOVINYL) THIOLCARBAMATES AND PROCESS FOR PREPARING SAME
Ottorino Palla, Crema; Remo Galli, Dresano; Franco Gozzo, San Donato Milanese, and Simone Lorusso, San Giuliano Milanese, all of Italy, assignors to Montedison S.p.A., Milan, Italy
Filed Aug. 15, 1980, Ser. No. 178,594
Claims priority, application Italy, Aug. 16, 1979, 25144 A/79; Oct. 9, 1979, 26341 A/79
Int. Cl.^{3} A01N *47/10;* **C07C** *155/02*
U.S. Cl. 424—300 **23 Claims**

1. Compounds of general formula:

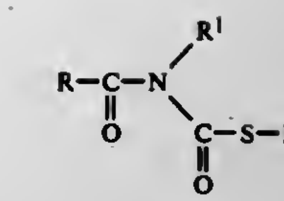

(I)

wherein:

R=phenyl, phenyl substituted by halogen atoms, benzyl, C_1-C_5 alkyl, or a C_1-C_5 alkyl substituted by halogen atoms;

R^1=C_1-C_4 alkyl, phenyl, or phenyl substituted by C_1-C_3 alkyls;

R^2=—CCl_3; —CCl_2—CCl_2X, —CCl=CClX or —CCl_2Y, in which X=H, Cl; Y=H, F.

16. A method of fighting fungi infections of useful plants by fungi of the different orders Ficomicoeti, Ascomicoeti and Basimiomicoeti, characterized in that, before the inception of the infection, an effective amount of at least one of the compounds of claim 1 is distributed, as such or in the form of an agrarian formulation, on the plants in a dose of at least 0.12%.

4,301,175
E-TYPE PROSTAGLANDIN COMPOSITIONS
Samuel H. Yalkowsky, Portage, Mich., assignor to The Upjohn Company, Kalamazoo, Mich.
Filed Dec. 29, 1980, Ser. No. 220,599
Int. Cl.^{3} A61K *31/215, 31/19*
U.S. Cl. 424—305 **16 Claims**

1. A stable, rapidly water miscible composition comprising

(a) an amount of a stabilizing rapidly water miscible vehicle consisting essentially of ethanol and triacetin in a volume to volume ratio from about 1:3 to about 3:1; and

(b) a quantity of an E-type prostaglandin which when dissolved in said amount of said vehicle is present therein in a concentration of greater than zero and less than about 100 mg/ml.

4,301,176
METHOD OF ADMINISTERING CALCIUM VALPROATE
Albert T. Grabowski, Dover, and Sadath U. Khan, Budd Lake, both of N.J., assignors to Warner-Lambert Company, Morris Plains, N.J.
Filed Aug. 18, 1980, Ser. No. 179,124
Int. Cl.^{3} A61K *31/20*
U.S. Cl. 424—318 **7 Claims**

1. A method of treating a human being suffering from convulsions, which comprises administering to said human being, a chewable anticonvulsant tablet dosage form consisting essentially of calcium valproate and a pharmaceutically acceptable carrier.

4,301,177
(3-METHYL-2-BUTENYL)PROPANEDIOIC ACID MONO (1,2-DIPHENYLHYDRAZIDE) AND SALTS THEREOF
Gianfranco Pala, Milan, and Enzo Cereda, Tortona, both of Italy, assignors to Istituto de Angeli S.p.A., Milan, Italy
Filed Mar. 31, 1980, Ser. No. 135,865
Claims priority, application Fed. Rep. of Germany, Apr. 20, 1979, 2915949
Int. Cl.^{3} C07C *109/10;* **A01N** *37/10*
U.S. Cl. 424—319 **4 Claims**

1. The compound of the formula

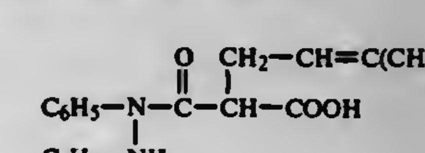

or a non-toxic, pharmacologically acceptable alkali metal or alkaline earth metal salt thereof.

4. The method of alleviating pain, reducing fever or relieving rheumatism in a warm-blooded animal in need thereof, which comprises perorally or rectally administering to said animal an effective analgesic, antipyretic, or antirheumatic amount of a compound of claim 1.

4,301,178
LIQUID-FILLED CHEWING GUM AND METHOD
Frank Witzel, Spring Valley; Wayne J. Puglia, Bellerose Village; K. Warren Clark, Brewster, and Donald A. M. Mackay, Pleasantville, all of N.Y., assignors to Life Savers, Inc., New York, N.Y.
Filed May 2, 1980, Ser. No. 145,942
Int. Cl.³ A23G *3/30*
U.S. Cl. 426—5 **23 Claims**

1. A liquid-filled chewing gum having prolonged sweetness including a water-insoluble solid phase and a liquid phase, said solid phase comprising a gum base matrix formed of a plurality of masses of gum base which are bound together by water-soluble binder, said gum base matrix including a network of voids or pockets laced throughout said masses, and said liquid phase comprising a liquid composition which is a member selected from the group consisting of a liquid sweetener solution, a flavor solution and mixtures thereof, retained in said voids or pockets, and surrounded by gum base, whereby upon chewing of said liquid-filled chewing gum, said liquid composition is released into the oral cavity.

4,301,179
BREAD PROCESS USING MILK SUBSTITUTE
Edward D. Schmidt, Bloomington, Minn., assignor to Dumas Seed Company, Moscow, Id.
Filed Jul. 27, 1979, Ser. No. 61,370
Int. Cl.³ A21D *2/36*
U.S. Cl. 426—19 **2 Claims**

1. A method of making standard white bread and characterized by short mixing and fermentation times, and comprising the steps of

forming a dough by combining bread ingredients for standard white bread including wheat flour, water, leavening agent, and a milk substitute comprising field pea flour and sweet dairy whey, with the pea flour comprising between about one half to three quarters of the milk substitute, and with the amount of the milk substitute being such that the pea flour is present in an amount between about 2% to 3% of the wheat flour by weight,
mixing the dough,
fermenting the dough, and then
baking the dough to form bread.

4,301,180
PROCESS FOR PRODUCING A FISH PRODUCT
Frank J. Simon, San Marcos; William C. Reinke, Delmar, both of Calif.; Hong-Ming Soo, Crestwood, Mo.; Christie L. Lanning, Chesterfield, Mo., and Stanley H. Richert, Webster Groves, Mo., assignors to Ralston Purina Company, St. Louis, Mo.
Filed Jun. 18, 1980, Ser. No. 160,693
Int. Cl.³ A23L *1/275, 1/277, 1/325*
U.S. Cl. 426—250 **10 Claims**

1. A process for producing a fish product resembling in color fish having light colored loin meat comprising:

comminuting red or dark meat portions of fish including trim, bellies, carcass and skin to form a minced meat mass,
adding a heat stable red dye to said minced meat in amounts such that the color of the minced meat matches the natural color of fish loin after retorting,
heat setting or cooking the minced meat with added dye, decoloring said dyed minced meat,
microcutting the decolored minced meat to a size small enough to be pumped or injected,
pumping or injecting the microcut meat into loin portions of fish to increase the weight up to about 108% to about 150% of the original weight of the loin portions and cooking the loin injected with microcut meat.

4,301,181
PROCESS FOR PRODUCING A FISH PRODUCT
Frank J. Simon, San Marcos; William C. Reinke, Delmar, both of Calif.; Hong-Ming Soo, Crestwood, Mo.; Mary Klenstra, Florissant, Md., and Stanley H. Richert, Webster Groves, Mo., assignors to Ralston Purina Company, St. Louis, Mo.
Filed Jun. 18, 1980, Ser. No. 160,694
Int. Cl.³ A23L *1/275, 1/277, 1/325*
U.S. Cl. 426—250 **16 Claims**

1. A process for producing a fish product resembling in color fish having light colored loin meat comprising:

comminuting red meat or dark portions of fish including trim, bellies, carcass and skin to form a minced meat mass,
adding an effective amount of a heat stable dye such to produce the natural color of fish loin after retorting,
forming the minced meat into a sheet providing a coherent plastic mass,
heat setting or cooking the sheet of minced meat in a coherent plastic mass and decoloring the minced meat so that it resembles in color the loin portions of fish.

4,301,182
PROCESS FOR PRODUCING A FISH PRODUCT
Frank J. Simon, San Marcos; William C. Reinke, Delmar, both of Calif., and Stanley H. Richert, Webster Groves, Mo., assignors to Ralston Purina Company, St. Louis, Mo.
Filed Jun. 18, 1980, Ser. No. 160,695
Int. Cl.³ A23L *1/275, 1/277, 1/325*
U.S. Cl. 426—250 **13 Claims**

1. A process for producing a fish product resembling in color fish having light colored loin meat comprising:

comminuting red or dark meat portions of fish including trim, bellies, carcass and skin to form a minced meat mass,
adding a heat stable red dye to said minced meats in amounts such that the color of the minced meat matches the natural color of fish loin after retorting,
mechanically working and extruding the minced meat mass through a restricted orifice at room temperature,
heat setting or cooking the extruded minced meat, and decoloring the extruded minced meat so that it resembles in color the loin portions of fish.

4,301,183
METHOD AND APPARATUS FOR DEGERMINATING A GRAIN KERNEL BY IMPELLING THE KERNELS ALONG A GUIDE VANE INTO AN IMPACT SURFACE
R. James Giguere, Kansas City, Mo., assignor to Cereal Enterprises, Inc., Kansas City, Mo.
Continuation-in-part of Ser. No. 909,974, May 26, 1978, Pat. No. 4,189,503. This application Nov. 13, 1979, Ser. No. 93,611
Int. Cl.³ B02C *9/02, 9/04*
U.S. Cl. 426—482 **12 Claims**

1. A method of degerminating a kernal of grain such as corn characterized by a germ portion surrounded by an endosperm portion and by relatively large side surfaces and relatively thin side edges, said method comprising:

providing a disc having a plurality of guide vanes extending in a curvilinear path and terminating in an end portion that is substantially parallel to a tangent of said disc;
placing said disc in a horizontal plane for rotation about a vertical axis;
providing a plurality of impact surfaces located in the same horizontal plane as said disc, each of said surfaces being substantially linear and extending transversely of the path of travel of a kernal impelled by said disc;
locating said impact surfaces away from the periphery of said disc a distance greater than the largest dimension of the kernal thereby precluding the application of crushing forces to said kernals as the latter pass between said disc and said surfaces;
feeding said kernels, at a controlled rate, from an initial overhead position onto the disc at a point near the center of the disc whereby each kernal is aligned by centrifugal forces as it moves along said guide vane to expose one of said side edges for contact with one of said impact surfaces; and
rotating said disc opposite to the direction of curvature of said guide vanes at a speed sufficient to impel said kernals outwardly along said vanes with sufficient force to crush said kernels against said impact surfaces thereby separating the germ from the endosperm in relatively whole condition.

11. In a machine for degerminating a kernel of grain such as corn having relatively large side surfaces and relatively thin edges, the improvement comprising:

a frame;
a disc member supported on said frame in a generally horizontal orientation for rotation about a substantially vertical axis;
a plurality of guide vanes on the upper surface of said disc member for guiding the kernel generally outwardly

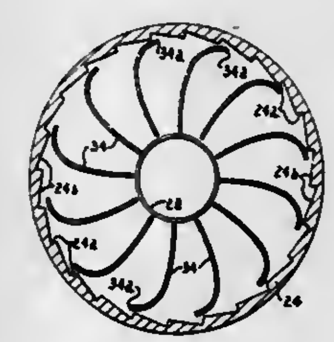

thereon, each of said vanes extending in a curvilinear path and terminating in an end portion that is substantially parallel to a tangent of said disc whereby a kernel impelled by said disc will be aligned by one of said vanes so that a side edge will be the leading edge of the kernel as it moves along said vane and is released by said disc;
means for presenting a plurality of impact surfaces in the same horizontal plane as said disc, each of said surfaces being substantially linear and extending transversely of the path of travel of a kernel impelled by said disc, said means presenting said impact surfaces being positioned away from the periphery of said disc a distance greater than the largest dimension of the kernel thereby precluding the application of crushing forces to said kernels as the latter pass between said disc and said surfaces;
means for feeding said kernals, at a controlled rate, from an initial overhead position onto the disc at a point near the center of the disc; and
means for rotating said disc member about said axis in a direction opposite to the direction of said guide vanes at a speed sufficient to centrifugally propel a kernel disposed in the disc member outwardly along one of the guide vanes and against said impact surface, whereby a compressive crushing force is applied to the kernel from said one side edge toward the center to fracture the endosperm portion away from the germ portion.

4,301,184
FLAVORING WITH 5-METHYL-3,5-OCTADIEN-2-ONE
Takao Yoshida, West Long Branch, and John B. Hall, Rumson, both of N.J., assignors to International Flavors & Fragrances Inc., New York, N.Y.
Continuation-in-part of Ser. No. 90,749, Nov. 2, 1979, abandoned, which is a division of Ser. No. 46,390, Jun. 7, 1979, Pat. No. 4,234,518, which is a division of Ser. No. 932,649, Aug. 10, 1978, Pat. No. 4,169,109. This application Aug. 28, 1980, Ser. No. 182,233
Int. Cl.³ A23L *1/226*
U.S. Cl. 426—534 **2 Claims**

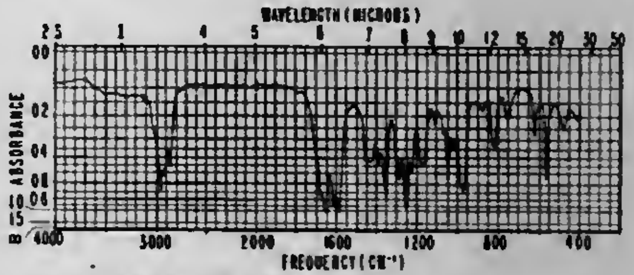

I R SPECTRUM FOR EXAMPLE IX, FRACTION 8

1. A process for augmenting or enhancing the aroma or taste of a foodstuff comprising the step of adding to said foodstuff from 0.02 parts per million up to 100 parts per million based on the total weight of said foodstuff a composition comprising 5-methyl-3,5-octadien-2-one prepared by reacting 2-methyl-2-pentenal and acetone in the presence of a zinc acetate dihydrate catalyst at a temperature in the range of 170°–180° C. for a period of 5 hours and then fractionally distilling the resulting reaction product at a temperature in the range of 91°–98° C. at 5–7 mmHg pressure.

4,301,185
STABILIZATION OF HEAT SENSITIVE ANTIOXIDANTS
Philip G. Schnell, Wheaton, Ill., assignor to Standard Oil Company (Indiana), Chicago, Ill.
Continuation-in-part of Ser. No. 967,078, Dec. 6, 1978, abandoned. This application Dec. 19, 1979, Ser. No. 105,392
Int. Cl.³ C12C *11/26;* **A23L** *3/34;* **A21D** *2/08*
U.S. Cl. 426—546 **14 Claims**

1. An improved antioxidant composition for slowing the rate of oxidation of oxidizable material in a food product comprising a heat sensitive antioxidant deposited on a heat-killed dried yeast, said heat sensitive antioxidant being unstable or volatile at temperatures in the range of from about 200° to about 400° F., antioxidant being deposited on said yeast in an amount sufficient to slow the rate of oxidation of oxidizable material in a food product when said composition is added to the food product.

4,301,186
AMMONIUM SALTS OF α-KETOCARBOXYLIC ACIDS
Wolfram Mayer; Hans Rudolph, both of Krefeld; Eckhard De Clear, Duisburg, and Manfred Schönfelder, Leverkusen, all of Fed. Rep. of Germany, assignors to Bayer Aktiengesellschaft, Leverkusen, Fed. Rep. of Germany
Filed Jun. 28, 1979, Ser. No. 53,009
Claims priority, application Fed. Rep. of Germany, Jul. 14, 1978, 2830954
Int. Cl.³ B05D *3/06*
U.S. Cl. 427—54.1 **12 Claims**

12. In a process for coating substrates with coating compositions based on polyurethane or epoxide precursors which harden in the presence of amines, the improvement wherein said compositions contain from about 0.1 to 40% by weight, based on the solids content, of ammonium salts of α-ketocarboxylic acids corresponding to the following general formula:

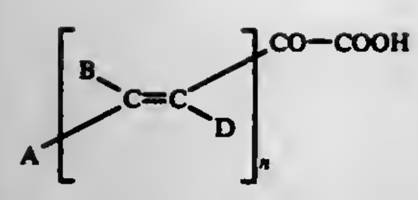

(I)

wherein

n represents an integer of from about 1 to 4,

A and B are the same or different and represent hydrogen, an optionally branched and/or halogen- or methoxy-substituted C_1-C_{10}-alkyl radical, a C_5-C_{15}-cycloalkyl radical a C_6-C_{15}-aryl radical which may optionally be substituted by —OH, —R, —OR, —SR, halogen, —NO_2, —COR, —COOH, —CN, COOR, —$CONH_2$, —OR', —SR' or —COR', a C_4-C_{10}-heterocyclic radical containing oxygen, sulphur and/or nitrogen as a hetero atom or A and B together represent a 5-membered or 6 membered cycloaliphatic ring optionally containing oxygen or nitrogen as a hetero atom, and

D represents hydrogen, halogen, —OH, —COOH, —COOR, —CH, —COOH, —OR, —COR, —COR', —CCl_3, an optionally branched C_1-C_{10}-alkyl radical, a C_4—C_{15}-cycloalkyl radical, a C_6-C_{15}-aryl radical which may optionally be substituted by —OH, —R, —OR, —SR, halogen, —NO_2, —COR, —COOH, —CN, —COOR, —$CONH_2$, —OR', —SR', or —COR' or a C_4-C_{10}-heterocyclic radical containing oxygen and/or nitrogen as a hetero atom,

wherein

R represents an optionally halogen-substituted alkyl group containing from about 1 to 6 carbon atoms and

R' represents an aryl group containing from about 6 to 12 carbon atoms

and said composition is irradiated with light having a wavelength of from about 250 to 500 nm.

4,301,187
PANEL

Jack A. Burch, Grand Forks, Canada, assignor to Jack A. Burch Ltd., Grand Forks, Canada

Filed Oct. 22, 1979, Ser. No. 87,112

Claims priority, application Canada, Sep. 26, 1979, 336368

Int. Cl.³ B05D *3/02, 5/00*

U.S. Cl. 427—45.1 6 Claims

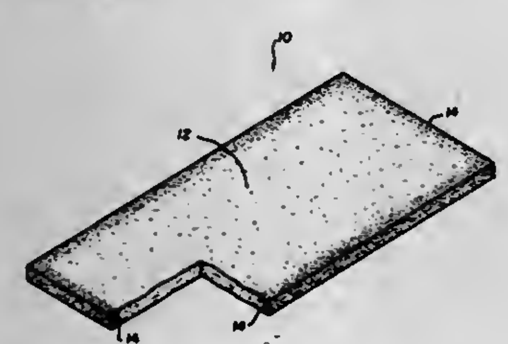

1. A method of absorbing resin into a predetermined part of a panel of particleboard to provide local strength increases in the predetermined part, the method compromising preheating the predetermined part by subjecting the part to an electric field;

immersing the panel in the resin; and

resubjecting the panel to the electric field to reheat the predetermined part to cure the resin.

4,301,188
PROCESS FOR PRODUCING CONTACT TO GaAs ACTIVE REGION

William C. Niehaus, New Providence, N.J., assignor to Bell Telephone Laboratories, Incorporated, Murray Hill, N.J.

Filed Oct. 1, 1979, Ser. No. 80,205

Int. Cl.³ H01L *21/283*

U.S. Cl. 427—88 6 Claims

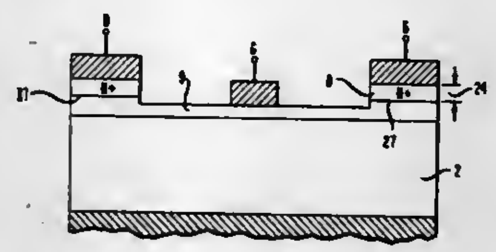

1. A process for producing an electrical contact to a GaAs active region of a transistor semiconductor device comprising the steps of depositing a metal body onto a semiconductor which is ultimately formed into a pad, said semiconductor pad being in intimate contact with said GaAs active region, and annealing said metal composition at an elevated temperature CHARACTERIZED IN THAT said pad is up to 0.5 μm thick and said temperature and the composition of said metal body is controlled to prevent formation of metallic dendrites that extend into said GaAs active region.

4,301,189
METHOD FOR APPLYING A SOLDER RESIST INK TO A PRINTED WIRING BOARD

Minoru Arai, Tokyo, and Akio Baba, Fuchu, both of Japan, assignors to Tokyo Print Co., Ltd., Tokyo, Japan

Division of Ser. No. 967,499, Dec. 7, 1978, Pat. No. 4,220,810. This application Jun. 2, 1980, Ser. No. 155,387

Claims priority, application Japan, Jun. 1, 1978, 53-66202

Int. Cl.³ H05K *3/00*

U.S. Cl. 427—96 5 Claims

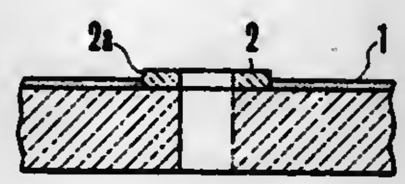

1. A method for manufacturing a printed board of the kind having an insulated base board and a land to be printed comprising the steps:

placing an ink-permeable mesh screen above the insulator base board with an anti-ink-permeable membrane piece having a thickness in the range of 40 to 100 μm and closely contacted with the land to be printed, the said mesh screen being integrally provided with the said anti-ink-permeable membrane piece having the same shape and located at the same position as that of the said land, so to form a hollow space around said land between said screen and said base,

applying solder resist ink over the said mesh screen, and

performing printing operation with the aid of a squeezing device which serves to depress the mesh screen onto the insulator base board so that said ink penetrates said mesh to form a resist layer with raised portions in said hollow space.

4,301,190
PRETREATMENT WITH COMPLEXING AGENT IN PROCESS FOR ELECTROLESS PLATING

Nathan Feldstein, 63 Hemlock Cir., Princeton, N.J. 08540

Continuation-in-part of Ser. No. 934,344, Aug. 17, 1978, Pat. No. 4,220,678, which is a division of Ser. No. 830,456, Sep. 6, 1977, abandoned, which is a division of Ser. No. 731,212, Oct. 12, 1976, Pat. No. 4,136,216, which is a division of Ser. No. 607,506, Aug. 26, 1975, Pat. No. 3,993,799, which is a continuation-in-part of Ser. No. 512,224, Oct. 4, 1974, abandoned, and a continuation-in-part of Ser. No. 672,046, Mar. 30, 1976, which is a division of Ser. No. 521,901, Nov. 8, 1974, Pat. No. 3,993,491, which is a continuation of Ser. No. 422,774, Dec. 7, 1973, abandoned, and a continuation-in-part of Ser. No. 672,045, Mar. 30, 1976, Pat. No. 4,239,538, which is a division of Ser. No. 550,435, Feb. 18, 1975, Pat. No. 3,993,848. This application Jul. 27, 1979, Ser. No. 61,484

Int. Cl.³ C23C *3/02*

U.S. Cl. 427—97 27 Claims

1. A process for the metallization of an etched non-conductor substrate by electroless or chemical plating comprising;

a. contacting said substrate with a composition comprising of an adsorption modifier said modifier being a complexing agent and wherein the retention of said adsorption modifier on said substrate provides a path for an increased catalytic site density of the colloidal catalytic product,

b. contacting said substrate with a colloidal catalytic composition, said composition comprising of non-precious metal which directly or serving as a precursor leads to the catalytic sites which are capable of electroless plating initiation and wherein said metal may be in either elemental state, an alloy, or a compound and mixtures thereof, and

c. contacting said substrate with a compatible electroless plating bath.

4,301,191
METHOD OF PROVIDING A CONDUCTOR LAYER PATTERN HAVING PARTS WHICH ARE PRESENT AT A SMALL SEPARATION IN THE MANUFACTURE OF SEMICONDUCTOR DEVICES

Hermanus L. Peek, Eindhoven, Netherlands, assignor to U.S. Philips Corporation, New York, N.Y.

Continuation of Ser. No. 962,831, Nov. 21, 1978, abandoned, which is a continuation of Ser. No. 759,714, Jan. 17, 1976, abandoned, which is a continuation of Ser. No. 618,771, Oct. 2, 1975, abandoned. This application Jan. 28, 1980, Ser. No. 115,972

Claims priority, application Netherlands, Oct. 25, 1974, 7413977

Int. Cl.³ H01L *21/285*

U.S. Cl. 427—88 13 Claims

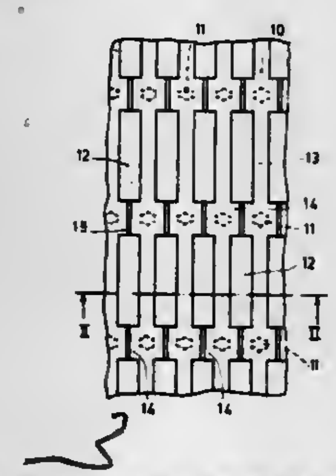

1. A method of forming on a substrate surface a conductor layer pattern having portions which are at least locally separated by small mutual distances, comprising the steps of:

(a) forming a mask over said substrate surface, said mask comprising a first layer having a plurality of juxtaposed apertures extending therethrough and being at least locally separated by narrow mask portions, and a second layer supporting said first layer above said substrate surface and having a plurality of openings between said apertures and said substrate surface, said openings being larger than said apertures, said second layer having a predetermined thickness for separating said first layer from said substrate surface, and

(b) depositing single conductive layers of a material in at least two different directions through each of said apertures onto said substrate surface, both of said different directions being angularly disposed to a normal to said substrate surface, and said deposition in each of said different directions through a given aperture contributing to formation of a single conductor layer portion on said substrate surface, said single conductor layer portions formed through each of said apertures being relatively disposed on said substrate surface at separations being smaller than widths of said narrow mask portions between apertures, said separations being smaller than 10 microns, and said separations being smaller than respective widths of said apertures.

4,301,192
METHOD FOR COATING THRU HOLES IN A PRINTED CIRCUIT SUBSTRATE

George J. Plichta, Woodbridge Township, Middlesex County, and Thomas E. Unger, Chatham, both of N.J., assignors to Western Electric Co., Inc., New York, N.Y.

Filed Jun. 2, 1980, Ser. No. 155,246

Int. Cl.³ H05K *3/42, 3/12*

U.S. Cl. 427—97 10 Claims

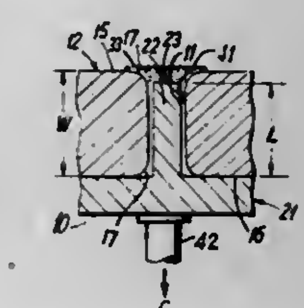

1. A method of coating the walls of a thru hole formed in a substrate with a liquid, which comprises:

(a) inserting a close-fitting, undersized pin into the hole so that a front end of the pin is positioned adjacent to a first surface of the substrate; next

(b) applying the liquid to portions of the first surface including the area about the hole and the front end of the pin; and then

(c) withdrawing the pin from the hole so that the liquid is drawn by the pin into the hole and coats the walls of the hole with a film of the liquid.

4,301,193
PROCESS FOR RESTORATION OF CLEAR PLASTIC

Paul W. Zak, 318 Schaffer Ave., Syracuse, N.Y. 13206

Filed Jul. 14, 1980, Ser. No. 168,162

Int. Cl.³ G02B *1/10;* B05D *3/12, 7/02*

U.S. Cl. 427—140 5 Claims

1. A process for removing scratches and impregnated dirt from transparent plastic articles for improving the transparency and optical quality thereof, the process including the steps of

applying a polishing formulation containing a mild abrasive to a surface to be treated,

polishing the surface with a soft material to substantially remove all scratches and dirt from said surface, applying to the polished surface a liquid silicone formulation, and

wiping the surface dry with a dry soft material to remove residual dirt and polish and leave behind a thin layer of

silicone upon the polished surface which fills the microscopic imperfections in the surface caused by polishing.

4,301,194

CHEMICAL MILLING MASKANT APPLICATION PROCESS

Arthur Borja, Anaheim, and Frans Van Otterdyk, Long Beach, both of Calif., assignors to Purex Corporation, Lakewood, Calif.

Filed May 4, 1979, Ser. No. 36,090

Int. Cl.³ B65B *33/00*

U.S. Cl. 427—154 **13 Claims**

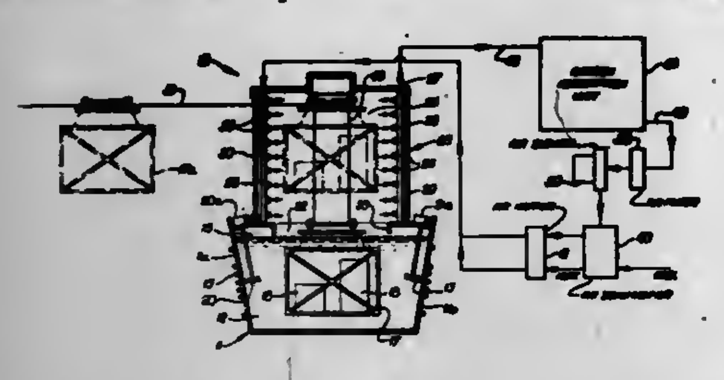

1. A process for applying a volatile liquid maskant to an article to be subjected to chemical milling, the process including the steps:

(a) providing a controlled temperature bath of said volatile maskant characterized as fast drying, providing a vapor blanket overlying the bath, and also maintaining the temperature of the vapor blanket at less than the bath temperature,

(b) placing the article into position above the level of the bath and blanket, and adjusting the temperature of the article in relation to the bath temperature, so that the temperature of the article surface is about 70° F. which is about 4° F. less than the bath temperature, prior to lowering of the article through the vapor blanket, and prior to contact of the article with the bath,

(c) lowering the article through the blanket into the bath, and withdrawing the article upwardly from the bath and through the blanket at a controlled rate between 12 and 26 inches per minute characterized in that the maskant coats the article to controlled coat thickness, and also in that the bath remains substantially free of return drainage of maskant off the withdrawn article,

(d) and, following said upward withdrawal, flowing a gas stream into contact with the maskant coat while the article remains above the level of the bath to assist in rapid drying of the maskant, the maskant coating having a thickness within the range of about 4 to 12 mils,

(e) the maskant consisting essentially of a volatile hydrocarbon solvent, and solids including elastomeric material, phenolic resin, and filler dissolved in the solvent, a major volumetric proportion of the solvent consisting of methylene chloride.

4,301,195

TRANSPARENT SHEET MATERIAL

Elizabeth A. Mercer, and John F. Eisele, both of St. Paul, Minn., assignors to Minnesota Mining and Manufacturing Company, St. Paul, Minn.

Division of Ser. No. 28,347, Apr. 9, 1979, Pat. No. 4,225,652. This application Feb. 15, 1980, Ser. No. 121,708

Int. Cl.³ B05D *1/36;* B32B *27/08*

U.S. Cl. 427—261 **10 Claims**

1. A process for forming an image on a transparent film structure which comprises the steps of

providing a sheet material that comprises

(a) a thin backing which is transparent to visible light; and

(b) a continuous ink-receptive stratum on one major surface of said backing wherein said stratum is transparent to visible light and employs (i) a first polymer that is water-soluble, rubbery, alkaline in aqueous solutions and consists essentially of the reaction product of a water-soluble secondary mono amine and an epoxidized water-insoluble, neutral, rubbery polymer selected from cis-1,4-

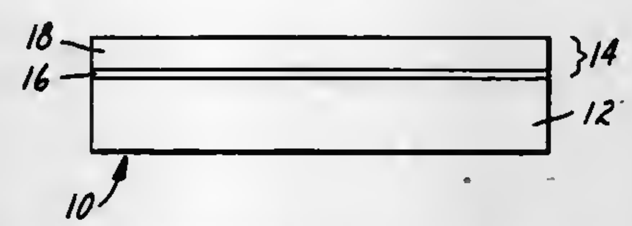

polybutadiene, butadiene:styrene copolymer, butadiene:acrylonitrile copolymer and cis-1,4-polyisoprene, and (ii) a second polymer that has a weight average molecular weight of at least about 50,000 and contains the repeating units

$$\text{+CHCH}_2\text{−)} \text{ with OH on the first carbon} \qquad (I)$$

$$\text{+CH}_2\text{CH−)} \text{ with } \text{O−C(=O)−CH}_3 \text{ on the second carbon} \qquad (II)$$

wherein the weight ratio of type I units to type II units in said second polymer is in the range of about 2:1 to 6:1; and wherein said ink-receptive stratum is selected from

(A) a single layer comprising a mixture of from about 30% to 70% by weight of said first polymer and from about 70% to 30% by weight of said second polymer and

(B) a multiple layer comprising a first continuous layer of said first polymer on said backing and a second continuous layer of said second polymer on said layer of first polymer contacting said ink-receptive stratum with an ink composition.

4,301,196

ELECTROLESS COPPER DEPOSITION PROCESS HAVING FASTER PLATING RATES

John F. McCormack, Roslyn Heights, and Francis J. Nuzzi, Freeport, both of N.Y., assignors to Kollmorgen Technologies Corp., Dallas, Tex.

Continuation of Ser. No. 941,912, Sep. 13, 1978, abandoned. This application Sep. 26, 1980, Ser. No. 191,068

Int. Cl.³ C23C *3/02*

U.S. Cl. 427—305 **22 Claims**

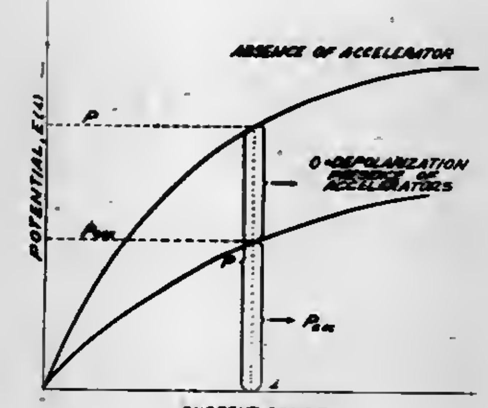

1. In a method for electrolessly depositing copper from an electroless copper deposition solution which comprises copper ions, a complexing agent for copper ions, a reducing agent and a pH adjustor and which is characterized by a plating rate which first increases and passes through a peak plating rate and then decreases as a function of pH above 10, the improvement for depositing at a rate greater than about 7 micrometers of electroless copper per hour in a bath composition operated at a temperature of about 25° C. to about 35° C. to a rate greater than 19 micrometers of electroless copper per hour in a bath composition operated at a temperature above 35° C., a coherent, structurally stable thin film of electroless copper adherent to a substratum, comprising:

(A) including within the electroless copper deposition solution an accelerating agent which contains a delocalized pi-bond and is selected from among

(a) heterocyclic aromatic nitrogen and and sulfur compounds,

(b) non-aromatic nitrogen compounds having at least one delocalized pi-bond,

(c) aromatic amines, and

(d) mixtures of any of the foregoing;

(B) contacting the electroless copper deposition solution with a substratum sensitive to the deposition of electroless copper; and

(C) while operating the electroless copper deposition solution at a pH above 10, regulating the pH thereabove and the amount of said accelerating agent therein to maintain a deposition within said rate, to thereby achieve a coherent, structurally stable thin film of electroless copper adhered to the surface of said substratum.

4,301,197

SILOXANE RELEASE SURFACES ON GLASS

Helmut Franz; James H. Hanlon, both of Pittsburgh, and Lloyd G. Shick, Natrona Heights, all of Pa., assignors to PPG Industries, Inc., Pittsburgh, Pa.

Filed Dec. 3, 1979, Ser. No. 99,775

Int. Cl.³ B05D *3/00, 3/12;* B32B *9/04;* C08G *77/12*

U.S. Cl. 427—353 **7 Claims**

1. In a method of fabricating plastic material wherein the plastic contacts a surface of a rigid glass substrate from which the plastic must be released, the improvement which comprises treating the glass surface with a composition consisting essentially of a poly alkyl hydrogen siloxane to form a durable surface which releases said plastic.

2. The method according to claim 1, wherein the poly alkyl hydrogen siloxane is in solution in acidified alcohol.

4. The method according to claim 2, wherein the glass surface is treated with the poly alkyl hydrogen siloxane by wiping the glass surface with the solution and rinsing off the excess with water.

4,301,198

BUILDING COMPONENT AND METHOD OF MAKING THE SAME

John C. Prior, 321 Cedar, Centralia, Ill. 62801

Continuation of Ser. No. 826,323, Aug. 22, 1977, abandoned. This application Aug. 1, 1979, Ser. No. 62,680

Int. Cl.³ B32B *1/06;* E04C *1/40*

U.S. Cl. 428—2 **2 Claims**

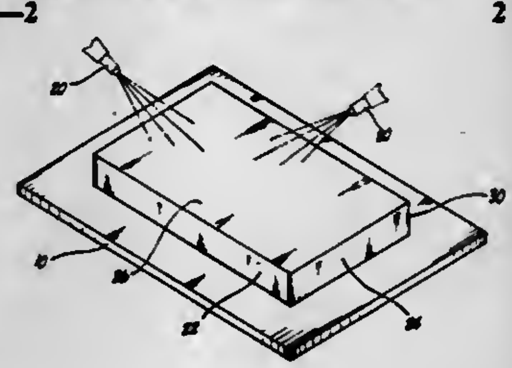

1. A building component comprising:

(a) a built-in form of fibrous material, including sidewalls and upper and lower walls providing a closed interior casing,

(b) an interior core of shredded material disposed within the form,

(c) an exterior casing of plastic binder reinforced with fiber strand particles and forming a substantially rigid and complete cover sealing the sidewall and upper and lower walls,

(d) the form being of absorbent material permitting the passage of binder therethrough,

(e) the interior core being of shredded fiberglass material, and

(f) the binder forming the exterior casing penetrating the absorbent form material to contact and adhere to the interior core material.

4,301,199

PRECUT FRAMING

John G. Pfanstiehl, Rte. 87, Andover, Conn. 06232

Continuation-in-part of Ser. No. 855,838, Nov. 30, 1977, abandoned. This application Aug. 10, 1979, Ser. No. 65,642

Int. Cl.³ A47G *1/08;* G09F *1/12*

U.S. Cl. 428—14 **21 Claims**

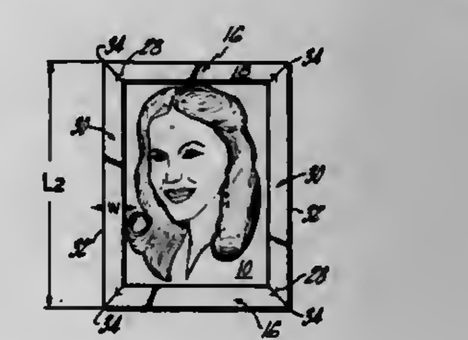

1. A precut framing for assembly as a decorative frame around a picture, poster, or the like and for attaching the picture to a wall or other support, comprising:

an elongated strip of decorative material having a top edge and bottom edge extending longitudinally of the strip, a first precut side edge angularly disposed to and connecting the top and bottom edges at one end of the strip, the first side edge being cut to form the mitered corner of a frame when the side edge is placed in abutting relationship with the side edge of another precut strip, a second precut side edge angularly disposed to and connecting the top and bottom edges at the end of the strip opposite the first side edge, the second side edge also being cut to form another mitered corner of the frame when the second side edge is placed in abutting relationship with the side edge of another precut strip, the strip having a decorative front surface which is exposed when the strip is applied in overlapping relationship to the edge of a picture and decoratively hides the edges and corners of the picture, and an opposite back surface, adhesive means carried on an outer longitudinal portion of the back surface for attaching the outer longitudinal portion of the strip in fixed position to a wall or other object, the adhesive means also being carried on an inner longitudinal portion for attaching the inner longitudinal portion of the strip to a picture, and protective sheet means releasably attached to the adhesive means on the inner and outer portions for preventing adhesion of the strip to other objects until the sheet means is removed and for independently controlling the adhesive attachment of the strip to the wall and to the picture, the protective sheet means including a first tearoff sheet extending longitudinally along the strip and overlying said outer longitudinal portion of the strip that attaches to a wall, and a second tearoff sheet also extending longitudinally along the strip in adjacent relationship with the first tearoff sheet and overlying said inner longitudinal portion of the strip that attaches to a picture whereby one

tearoff sheet may be removed from the back surface of the precut strip before the other to permit the one longitudinal portion of the precut strip to be attached to a wall and the other portion to a picture independently to enable orderly attachment of each precut strip in a manner to produce proper positioning of each precut strip relative to the picture, and to both abutting precut strips, and to the wall.

4,301,200
PLASTIC TUBE FORMED BY SPIRAL WINDING OF A SNAP LOCKING PROFILE STRIP
Michel Langenfeld, Lay Saint Christophe, and Andre Lagabe, Foug, both of France, assignors to Pont-a-Mousson S.A., Nancy, France
Filed Sep. 5, 1980, Ser. No. 184,443
Claims priority, application France, Sep. 10, 1979, 79 22550
Int. Cl.³ F16L *9/16*
U.S. Cl. 428—33 **6 Claims**

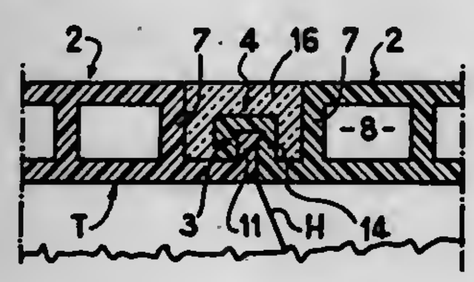

1. A tube of plastic material formed by spirally winding a profile strip comprising a rectangular cross-sectional body (2) having a recessed fastening means on each edge, one male and the other female, wherein each fastening means (3, 4) comprises an axial support flange (10, 13) which lengthens one of the exterior (5) and interior (6) surfaces of the body, said axial support flanges (10, 13) both extending from the same surface of said body, two adjacent flanges abutting one another and two fastening means when engaged defining with adjacent sides (7) of the body a U-sectioned space, and a border insert (16) having a complementary cross-section filling said space and operating to lock said fastening means together.

4,301,201
SKI POLE SHAFT
Thomas C. Stout, Concord, Mass., assignor to Trail Equipment Company, Inc., Concord, Mass.
Continuation of Ser. No. 25,405, Mar. 30, 1979, abandoned. This application Apr. 25, 1980, Ser. No. 143,889
Int. Cl.³ B32B *1/08, 5/28*
U.S. Cl. 428—36 **18 Claims**

1. A thin wall ski pole shaft comprising:
a tubular element formed of a plurality of longitudinally stressed high tensile strength continuous filaments extending end to end of the element and spaced in an annular array about the axis of the element; and
a matrix of set synthetic resin embedding said filaments, said filaments being maintained in the longitudinally stressed condition by said set resin matrix to define a longitudinally prestressed thin wall tubular shaft wall having a thickness in the range of approximately 0.05" to 0.10" and an outer diameter of approximately 10 times the thickness of the wall, said filaments comprising a major portion of the shaft wall.

4,301,202
TECHNIQUE FOR CONVERTING BALSA LOGS INTO PANELS
Jean Kohn, New York, N.Y., assignor to Baltek Corporation, Northvale, N.J.
Continuation of Ser. No. 919,284, Jun. 26, 1978, abandoned, which is a division of Ser. No. 860,617, Dec. 14, 1977, Pat. No. 4,122,878. This application Jun. 21, 1979, Ser. No. 50,699
Int. Cl.³ B32B *21/04*
U.S. Cl. 428—50 **3 Claims**

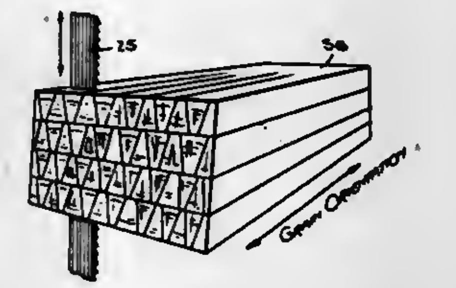

1. A laminated structure constituted by an end-grain panel formed by a layer of radially-cut sectors of balsa wood having a wedge-like formation derived from a tapered log, the apexes of the sectors all having the same angle and the faces of the sectors lying in parallel to the radii of the log, each sector being cut at its apex and its base whereby the cross-sectional geometry of each sector is that of an isosceles trapezoid having like base angles, the sectors being kiln dried and relatively free of warpage, and being interlaminated in side-by-side relation with their angled sides complementing each other, juxtaposed sectors being reversely oriented to effectively cancel out said taper, the grain of said balsa wood in said panel being perpendicular to the broad faces thereof, which faces are defined by an array of interfitting trapezoidal forms resulting from the fact that the panel is produced by cutting into panels a multi-layer integrated block, each layer of which has a grain direction that is substantially flat with respect to the broad faces of the layer, and sheets adhered to the opposite faces of the panel.

4,301,203
MANUFACTURING A THERMOPLASTIC NON-WOVEN WEB COMPRISING COHERENTLY INTERCONNECTED FILAMENTS
Herbert W. Keuchel, Tallmadge, Ohio, assignor to PNC Company, Akron, Ohio
Continuation of Ser. No. 928,612, Jul. 27, 1978, abandoned, which is a division of Ser. No. 771,643, Feb. 24, 1977, Pat. No. 4,141,713. This application Feb. 29, 1980, Ser. No. 125,935
Int. Cl.³ B32B *5/12*
U.S. Cl. 428—105 **2 Claims**

1. A thermoplastic extruded flat sheet comprising a web of coherently interconnected filaments of indeterminate length continuously produced from a common melt source, said coherently interconnected filaments having substantially parallel alignment, said alignment being at an angle to the longitudinal axis of the assembly.

4,301,204
SHEET USEFUL AS ROOFING
Joseph H. McCusker, Raynham, Mass., and Philip R. Siener, Jr., Greene, R.I., assignors to Cooley Incorporated, Pawtucket, R.I.
Filed Nov. 24, 1980, Ser. No. 209,721
Int. Cl.³ B32B *5/08, 5/10, 27/08, 27/20*
U.S. Cl. 428—110 **4 Claims**

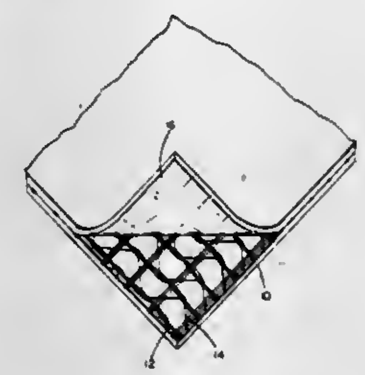

1. A sheet comprising a first layer formed from a plastic resin composition,
a second layer formed from said plastic resin composition, and a third layer sandwiched between said first layer and said second layer,
the plastic in said plastic resin composition consisting of chlorinated polyethylene,
said plastic resin composition containing titanium dioxide but no plasticizer,
said third layer comprising a foraminous, stressfree reinforcing layer.

4,301,205
DEVICE FOR FASTENING OBJECTS ON A FLAT SUPPORT MEMBER
Volker Seltenheim, Gerolzhofen; August Schubert, Geldersheim; Peter Paschakarnis, Schwebheim; Josef Vonderau, Bad Neustadt; Frank Ilzig; Walter Frosch, both of Schweinfurt, and Egon Füglein, Aachen, all of Fed. Rep. of Germany, assignors to Fichtel & Sachs A.G., Schweinfurt, Fed. Rep. of Germany
Filed Jul. 18, 1979, Ser. No. 58,668
Claims priority, application Fed. Rep. of Germany, Jul. 20, 1978, 2831895
Int. Cl.³ B32B *3/02, 7/06*
U.S. Cl. 428—127 **2 Claims**

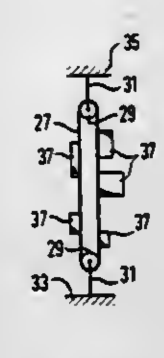

1. A device for detachably fastening objects of varying size and shape thereto so as to temporarily hold such objects comprising a member having a flat surface and having means for being attached to a support therefor, wherein the flat surface is coated with a layer of pressure sensitive adhesive having a thickness between 0.5 and 2 mm and wherein the flat surfaced member is a foil stretched between two clamping members.

4,301,206
SURGICAL WRAPPER
James S. Mills, 500 N. Green Bay Rd., Lake Forest, Ill. 60045
Filed Nov. 8, 1979, Ser. No. 92,546
Int. Cl.³ B32B *23/02*
U.S. Cl. 428—193 **1 Claim**

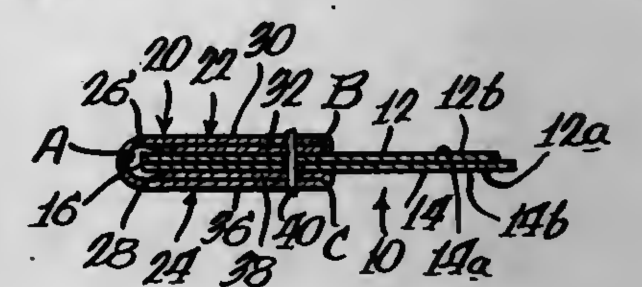

1. A surgical wrapper comprising:
two overlapping layers of woven material, wherein each layer of woven material has generally the same dimensions, each layer has an inner surface juxtaposed to the inner surface of the other layer, and an outer surface that defines an outer surface of said surgical wrapper, and each layer has an outer edge along its perimeter,
woven tape means is folded lengthwise about said outer edge of said layers along a first fold line and has a first segment overlying the outer surface of one of said layers along a marginal portion of said one layer and a second segment overlying the outer surface of the other of said layers along a marginal portion of said other layer, and said first tape segment extends between said first fold line and one longitudinal edge of said tape means and said second tape segment extends between said first fold line and the other longitudinal edge of said tape segment,
said first segment is folded inwardly upon itself lengthwise along a second fold line to define a first portion between said first and second fold lines, and a second portion between said second fold line and said one longitudinal edge of said tape segment, said second portion has a smaller transverse dimension than said first portion and is positioned between said first portion and said outer surface of said one layer,
said second segment is folded inwardly upon itself lengthwise along a third fold line to define a first part between said first and third fold lines, and a second part between said third fold line and the other longitudinal edge of said tape segment, said second part has a smaller transverse dimension than said first part and is positioned between said first part and said outer surface of said other layer,
thread means for securing said tape means to said layers, said thread means extending through said two layers, said first portion and said second portion of said first segment of said tape means, and said first part and said second part of said second segment of said tape means for securing the tape means and the two layers together along said marginal portion of said layers while covering said outer edge of said layers, said thread means being positioned closer to said second and third fold than said first fold, and said thread means being positioned closer to said second and third fold than said first fold, said tape means extends along the entire length of said marginal portion of said layers.

4,301,207
FLOOR COVERING FOR INDOOR SPORTS ARENA
Cristoph Schomerus, Marksweg 22, 4600 Dortmund, Fed. Rep. of Germany
Filed Feb. 15, 1980, Ser. No. 121,663
Claims priority, application Fed. Rep. of Germany, Feb. 19, 1979, 2906274
Int. Cl.³ B32B *5/16*
U.S. Cl. 428—241 **5 Claims**

1. A floor covering for an indoor sports arena having a

massive subflooring, comprising a support and retention open work layer applied to said subflooring, and a packed outdoor surfacing composition deposited in and on said layer, wherein said layer comprises a coconut fiber mat as an elastic material

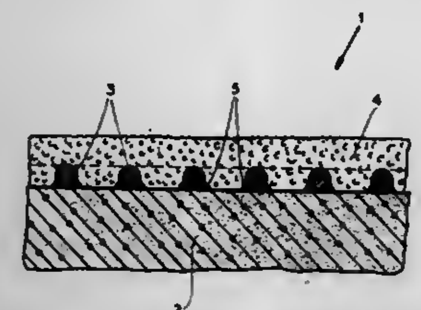

having a reticulate structure, having interstices of dimensions substantially matching the particle size of said composition, and is bonded to said subflooring and wherein said composition is selected from the group which consists of sand, red sand, cinders and dirt.

4,301,208
METHOD FOR REDUCING THE ADHESION OF ICE TO THE WALLS OF NAVIGATION LOCKS
Hans H. G. Jellinek, Potsdam, N.Y.; Guenther E. Frankenstein, Lebanon, and Ben Hanamoto, North Sutton, both of N.H., assignors to The United States of America as represented by the Secretary of the Army, Washington, D.C.
Filed Sep. 4, 1980, Ser. No. 183,878
Int. Cl.^{3} B32B *27/36, 9/04*
U.S. Cl. 428—334 **11 Claims**

1. A method of reducing the adhesion of ice to a surface exposed to icing conditions comprising coating said surface with a block co-polymer of polycarbonate and dialkylsiloxane.

3. The method of claim 1 wherein the coating is from about 0.10 to about 0.13 mm thick.

4,301,209
RADIATION CURABLE COATING COMPOSITION COMPRISING AN OLIGOMER, AND AN ULTRA-VIOLET ABSORBER
Donald H. Lorenz, Basking Ridge; Shu T. Tu, E. Brunswick, and Donald P. Wyman, Wayne, all of N.J., assignors to GAF Corporation, New York, N.Y.
Filed Oct. 1, 1979, Ser. No. 80,289
The portion of the term of this patent subsequent to Jan. 16, 1996, has been disclaimed.
Int. Cl.^{3} B32B *27/30*
U.S. Cl. 428—339 **18 Claims**

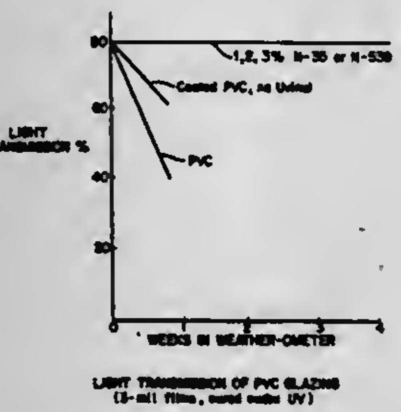

1. A radiation curable coating composition comprising an acryl urethane oligomer and a benzylidene acid ester ultra-violet light absorber of Formula IV:

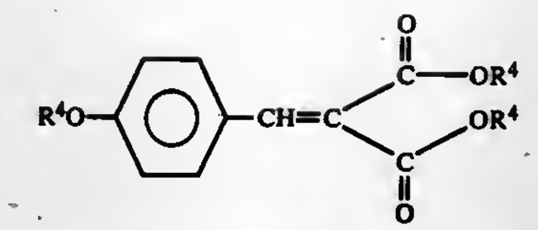

(IV)

wherein R^4 is independently alkyl or hydroxy alkylene.

4,301,210
METHOD FOR MANUFACTURING CAST-COATED PAPER
Nobu Yasuda; Masafumi Masuda, and Tomoichi Morita, all of Tokyo, Japan, assignors to Mitsubishi Paper Mills, Ltd., Tokyo, Japan
Continuation of Ser. No. 40,154, May 17, 1979, Pat. No. 4,265,969. This application Jul. 17, 1980, Ser. No. 169,741
The portion of the term of this patent subsequent to May 5, 1998 has been disclaimed.
Claims priority, application Japan, May 19, 1978, 53-59594; May 26, 1978, 53-62989
Int. Cl.^{3} B05D *3/02, 3/06, 3/12;* B32B *23/08*
U.S. Cl. 428—342 **11 Claims**

1. A method for manufacturing cast-coated paper, which comprises applying at least one undercoating of an aqueous coating composition containing coating pigments and a binder to at least one side of the base paper to form at least one undercoating layer, at least one of the undercoatings being applied by means of a blade coater and the application rate of the undercoating being 5 to 25 g/m^2 on dry basis per side; then applying onto the undercoating layer an overcoating of an aqueous coating composition containing coating pigments and a polymer latex having a glass transition temperature of 38° C. or higher; drying the overcoating at a temperature below the glass transition temperature of the polymer latex; and subjecting it to a mirror finishing treatment at a temperature higher than said glass transition temperature to obtain a cast-coated paper having a specular gloss greater than 15% at an incident angle of 20°.

10. A cast-coated paper manufactured by the method according to claim 1.

4,301,211
BRAZING ROD COMPRISING AN ALLOY CORE COATED WITH A LAYER OF ELASTOMER CONTAINING A FLUX
Mieczyslaw H. Sloboda, Pinner, England, assignor to Johnson, Matthey & Co., Limited, London, England
Filed Jul. 31, 1979, Ser. No. 62,555
Claims priority, application United Kingdom, Aug. 1, 1978, 31791/78
Int. Cl.^{3} B23K *35/34, 35/365;* B32B *15/06*
U.S. Cl. 428—385 **6 Claims**

1. In a brazing rod comprising a brazing alloy coated with a brazing flux, the improvement which comprises including in said coating polyisobutylene elastomer having a molecular weight of up to 125,000, said elastomer functioning to reduce the tendency of the flux coating to be brittle and consequently crack in transit or handling.

4. A method of manufacturing a brazing rod according to claim 1 which comprises coating a rod of brazing alloy with a paste comprising the brazing flux in powder form and an organic carrier containing the elastomer and then baking the coated rod.

4,301,212
SCRATCH-RESISTANT AND WEATHER-RESISTANT LAMINATES BASED ON POLYCARBONATE
Wolfgang Cohnen, Leverkusen; Frank Kleiner, Cologne, and Gerhard Kranz, Moers, all of Fed. Rep. of Germany, assignors to Bayer Aktiengesellschaft, Bayerwerk, Fed. Rep. of Germany
Filed Jun. 2, 1978, Ser. No. 911,740
Claims priority, application Fed. Rep. of Germany, Jun. 4, 1977, 2725317
Int. Cl.^{3} B32B *27/36*
U.S. Cl. 428—412 **19 Claims**

1. A laminate comprising a polycarbonate layer which carries, on at least one of its surfaces, an uncrosslinked polyacrylate layer having a coating of a hydroxylated fluoropolymer crosslinked with methylmelamine, polysilicic acid or both on its outer surface.

4,301,213
STEEL BACKING BEARING BLANK WITH BONDED CERAMIC LAYER, COATING OF POLYARYLENE SULPHIDE THEREON AND METHOD OF MAKING
Glyndwr J. Davies, Southall, England, assignor to The Glacier Metal Co., Ltd., Middlesex, England
PCT No. PCT/GB79/00025, § 371 Date Nov. 6, 1979, § 102(e) Date Nov. 6, 1979, PCT Pub. No. WO79/00716, PCT Pub. Date Oct. 4, 1979.
PCT Filed Feb. 8, 1979, Ser. No. 165,123
Claims priority, application United Kingdom, Mar. 6, 1978, 8824/78
Int. Cl.^{3} B32B *27/28, 15/18, 27/08*
U.S. Cl. 428—419 **16 Claims**

1. A steel backing having a coating of polyarylene sulphide wherein the coating is bonded to a ceramic bonding layer, comprising silicon oxide, boron oxide and sodium oxide, which is bonded to the backing.

8. A method of coating a steel backing comprising: bonding a ceramic bonding layer comprising silicon oxide, boron oxide and sodium oxide to the backing, and bonding a coating of polyarylene sulphide to the bonding layer.

4,301,214
LOW THERMAL EXPANSION CERAMIC AND PROCESS
William B. Crandall, Alfred Station, N.Y., assignor to Alfred University Research Foundation, Alfred, N.Y.
Filed Dec. 15, 1980, Ser. No. 216,196
Int. Cl.^{3} C04B *33/00, 33/04, 33/24*
U.S. Cl. 428—446 **9 Claims**

9. A ceramic product consisting essentially of:
(a) a body having an expansion coefficient from about 1.0×10^{-6}° C. to about 2.5×10^{-6}° C. which consists essentially of a sintered mixture of from about 40% by weight to about 60% by weight spodumene and from about 40% by weight to about 60% by weight clay said mixture also including iron oxide in an amount from about 1.0% to about 7.0% by weight of the total sintered mixture, said body having an x-ray diffraction which shows a composition of B-spodumene solid solution and mullite, wherein the mullite content is less than 10% by volume of the composition;
(b) a glaze composition coated on the body consisting essentially of from about 70% by weight to about 90% by weight of spodumene and from about 10% by weight to about 30% by weight of talc and 2% by weight to about 10% by weight of whiting, said glaze composition also including from about 1.0% by weight to about 7.0% by weight of iron oxide in the glaze composition; and
(c) a terra sigillata composition applied to the base of the body consisting essentially of from about 10% to about 35% by weight of spodumene and from about 65% to about 90% by weight of clay, said terra sigillata composition also including from about 1.0% by weight to about 7.0% by weight of iron oxide in the terra sigillata composition.

4,301,215
PROCESS FOR THE PREPARATION OF IMPREGNATED WOOD
Bernward Deubzer, Burghausen; Erich Brunner, Gmunden; Herman Wilhelm, Braunau, and Konrad Sallersbeck, Burghausen, all of Fed. Rep. of Germany, assignors to Wacker-Chemie GmbH, Munich, Fed. Rep. of Germany
Filed Jan. 28, 1980, Ser. No. 116,125
Claims priority, application Fed. Rep. of Germany, Jan. 30, 1979, 2903376
Int. Cl.^{3} B32B *9/04*
U.S. Cl. 428—447 **7 Claims**

1. A process for preparing plastic wood which consisting essentially of impregnating wood with a mixture containing (1) an organopolysiloxane having a ratio of SiC-bonded organic radicals per silicon atom of from 1.9 to 2 when the average molecular weight of the organopolysiloxane is at least 20,000 and when the average molecular weight of the organopolysiloxane is at least 500, the ratio of SiC-bonded organic radicals per silicon atom is from 0.5 to 1.89, said organopolysiloxane containing reactive groups selected from the class consisting of condensable groups, SiC-bonded alkenyl groups and mixtures thereof, and (2) an organic silicon compound with a maximum of 10 silicon atoms per molecule and having at least 3 reactive group selected from the class consisting of condensable groups, condensable atoms and mixtures thereof at pressures higher or lower than the surrounding atmosphere, and thereafter crosslinking the organopolysiloxane (1) which is present in the wood.

4,301,216
NYLON/SAN LAMINATES
Thomas S. Grant, Vienna, W. Va., assignor to Borg-Warner Chemicals, Inc., Parkersburg, W. Va.
Filed Aug. 27, 1979, Ser. No. 70,090
Int. Cl.^{3} B32B *27/34*
U.S. Cl. 428—476.3 **3 Claims**

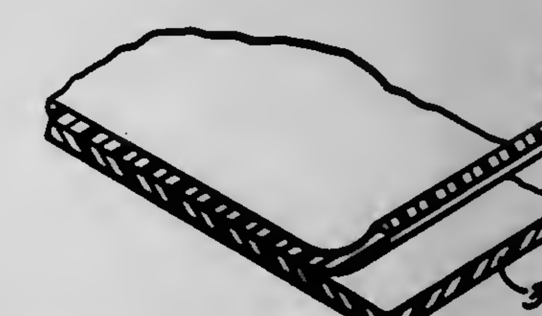

1. A composite structure comprising a layer of polyamide adjacent to and bonded to a layer of SAN copolymer resin, said SAN copolymer resin being copolymerized with from about 0.5 to about 5 wt. % of a compound selected from the group consisting of itaconic acid, citraconic acid, acrylic acid, maleic acid, maleic anhydride and acrylamide.

4,301,217

METHOD OF FLAMEPROOFING WOOD WITH INORGANIC AMMONIUM SALTS AND DICYANDIAMIDE/FORMALDEHYDE REACTION PRODUCTS

Peter Rohringer, Schönenbuch, and Hans Wegmüller, Riehen, both of Switzerland, assignors to Ciba-Geigy Corporation, Ardsley, N.Y.

Filed Oct. 17, 1979, Ser. No. 85,562

Claims priority, application Switzerland, Oct. 26, 1978, 11079/78

Int. Cl.³ B05D *3/06, 3/02, 3/12, 1/18*

U.S. Cl. 428—528 **9 Claims**

1. A process for flameproofing wood, which comprises impregnating wood with aqueous preparations containing
(a) 50 to 300 g/l of a water-soluble ammonium salt of a non-volatile inorganic acid, and
(b) 3 to 300 g/l of a water-soluble cationic reaction product of
(b_1) dicyandiamine;
(b_2) formaldehyde or formaldehyde donor; and at least one of
(b_3) an ammonium salt, or
(b_4) an alkylenepolyamine containing at most 18 carbon atoms, or the acid salts thereof,
and subsequently drying the wood.

8. The wood provided with a flameproof finish by the method of claim 1.

4,301,218

BI-POROUS RANEY-NICKEL ELECTRODE

Gabor Benczur-Ürmössy, Stuttgart, Fed. Rep. of Germany, assignor to Deutsche Automobilgesellschaft mbH, Hannover, Fed. Rep. of Germany

Filed Jul. 30, 1979, Ser. No. 62,119

Claims priority, application Fed. Rep. of Germany, Aug. 12, 1978, 2835506

Int. Cl.³ H01M *4/98, 4/96, 4/88;* **C25B** *11/06*

U.S. Cl. 429—42 **28 Claims**

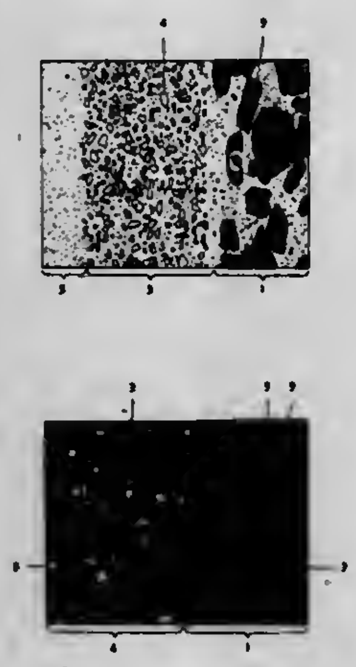

1. A bi-porous electrode, including at least one conducting first layer having relatively large pores and at least one conducting second layer having relatively small pores to face a counter electrode in a cell, and containing Raney-nickel and wherein, said electrode includes a preformed substrate body made of metallized fibrous material in which Raney-nickel particles or a starting alloy therefor are so placed that a space is formed in said substrate which is substantially free from Raney-nickel and constitutes said first layer having relatively large porosity.

9. A method for producing a bi-porous electrode including at least one conducting first layer having relatively large pores and at least one conducting layer having relatively small pores and containing Raney-nickel, said method including the steps of providing a preformed fibrous substrate consisting of metallized fibers, introducing into said substrate Raney-nickel powder; whereby a space is formed in said substrate which is substantially free from Raney-nickel.

28. In an electro-chemical cell having a counter-electrode and a bi-porous hydrogen electrode comprising at least one conducting first layer having relatively large pores and at least one conducting second layer having relatively small pores and facing said counter-electrode, said second layer containing Raney-nickel, the improvememnt wherein

said bi-porous hydrogen electrode comprises a preformed substrate body formed of metallized organic or carbon fibers or open pore foam impregnated with Raney-nickel particles over a portion of the thickness of said preformed substrate body, said Raney-nickel impregnated portion of said preformed substrate body constituting said cell layer having relatively small pores, and the unimpregnated portion of said preformed substrate body constituting the layer having relatively large pores, the metal coating of said preformed substrate consisting of 0.3-0.7 g of metal per cm^3, the porosity of said layer having relatively large pores being between 82 and 97% and the porosity of said layer having relatively small pores being between 50 and 75%.

4,301,219

ELECTRIC STORAGE CELL OR BATTERY

Jiro Kosuga, 1-9-9-106, Sendagaya, Shibuya-Ku, Tokyo-To, Japan

Continuation of Ser. No. 905,365, May 11, 1978, abandoned. This application Aug. 28, 1979, Ser. No. 70,693

Claims priority, application Japan, May 13, 1977, 52-54840

Int. Cl.³ H01M *10/06*

U.S. Cl. 429—57 **1 Claim**

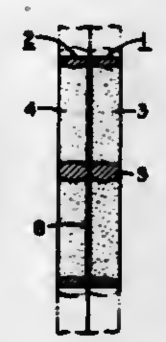

1. A lead storage battery of a large type which comprises a storage jar, an electrolyte consisting of dilute sulfuric acid and contained in said storage jar, and negative and positive electrodes immersed within said electrolyte, said negative electrode comprising a negative electrode metal or a negative electrode active material and said positive electrode comprising a positive electrode active material, and said negative electrode metal or negative electrode active material being placed in direct contact with said positive electrode active material, said contact portion comprising a chemical insulating layer formed at said contact portion by subjecting to reduction and oxidation by discharging and charging through said contact portion whereby short-circuiting caused by direct contact is avoided and wherein a large-meshed woven or non-woven fabric having resistance to the electrolyte is inserted between the negative and positive electrodes.

4,301,220

NONAQUEOUS CELL WITH CATHODE COMPRISING THE REACTION PRODUCT OF BISMUTH TRIOXIDE AND MOLYBDENUM TRIOXIDE

William P. Evans, Rocky River, and Violeta Z. Leger, North Olmsted, both of Ohio, assignors to Union Carbide Corporation, New York, N.Y.

Filed Jun. 24, 1980, Ser. No. 162,589

Int. Cl.³ H01M *6/14*

U.S. Cl. 429—197 **7 Claims**

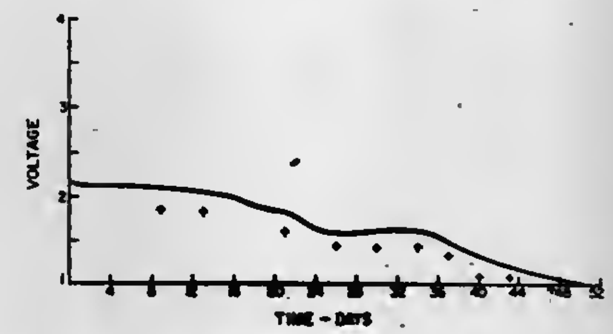

1. A nonaqueous cell comprising an active metal anode, an organic electrolyte solution comprising an organic solvent with an inorganic salt dissolved therein and a solid cathode material comprising the thermal reaction product of bismuth trioxide and molybdenum trioxide having a mole ratio of bismuth trioxide to molybdenum trioxide of between about 1:2 and about 3:1.

4,301,221

CHALCOGENIDE ELECTROCHEMICAL CELL

Samarnath Basu, Philadelphia, and Wayne L. Worrell, Narberth, both of Pa., assignors to University Patents, Inc., Norwalk, Conn.

Continuation of Ser. No. 943,107, Sep. 18, 1978, Pat. No. 4,206,276. This application Dec. 7, 1979, Ser. No. 101,134

Int. Cl.³ H01M *4/58*

U.S. Cl. 429—218 **15 Claims**

1. A cathode of an electrochemical cell in the discharged state, comprising a mixed Group IIA metal intercalated dichalocogenie of the formula $A'_zA_yMZ_x$ wherein:
A and A' are each Group IIA metals with A being more electropositive and larger than A';
M is at least one transition metal from Group IV or V;
Z is sulfur, selenium or tellurium;
x is a numerical vaue from about 1.8 to about 2.1;
y is a numerical value from about 0.01 to 1; and
z is a numerical value in the range $0<z\leqq3.25$.

8. A composition of the formula $A_yA'_zM.Z_x$ wherein
A and A' are each Group IIA metals with A being more electropositive and larger than A';
M is at least one transition metal from Group IV or V;
Z is sulfur, selenium or tellurium;
x is a numerical value from about 1.8 to about 2.1;
y is a numerical value from about 0.01 to 1; and
z is a numerical value in the range $0<z\leqq3.25$.

15. A battery is the discharged state wherein the cathode comprises a mixed Group IIA metal intercalated dichalcogenide of the formula $A'_zA_yMZ_x$ wherein
A and A' are each Group IIA metals with A being more electropositive and larger than A';
M is at least one transition metal from Group IV or V;
Z is sulfur, selenium or tellurium;
x is a numerical value from about 1.8 to about 2.1;
y is a numerical value from about 0.01 to 1; and
z is a numerical value in the range 0 z 3.25; said battery further including an electrolyte comprising a salt of A' so that a battery charging A' forms as the anode-active material.

4,301,222

SEPARATOR PLATE FOR ELECTROCHEMICAL CELLS

Roger C. Emanuelson, Glastonbury; Warren L. Luoma, Manchester, and William A. Taylor, Glastonbury, all of Conn., assignors to United Technologies Corporation, Hartford, Conn.

Filed Aug. 25, 1980, Ser. No. 181,439

Int. Cl.³ H01M *2/16*

U.S. Cl. 429—251 **11 Claims**

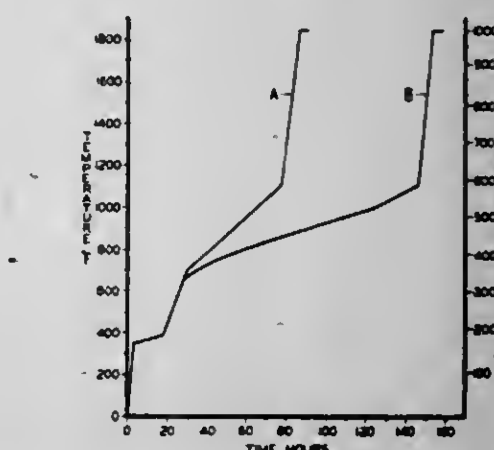

1. An electrochemical cell separator plate having a thickness no greater than 0.150 inch and having been made by molding and then heat treating a mixture comprising high purity graphite powder and a carbonizable thermosetting phenolic resin in a proportion 45-65 parts by weight graphite and 55-35 parts by weight resin, said graphite powder consisting of substantially 100% fully graphitic particles having a density of at least 2.0 gm/cc, an average aspect ratio of less than about 0.40, and a distribution of particle sizes up to a maximum of about 230 microns, with between 31 to 62 weight percent of the particles having a size less than 45 microns, said resin having a carbon yield of at least 50 percent, said finished plate having been graphitized to at least 2100° C. and having an initial threshold corrosion potential at 400° F. of at least 1,000 millivolts, a maximum initial thru-plane electrical resistivity of 0.011 ohm-cm, an initial flexural strength at 400° F. of at least 4000 psi and an electrolyte takeup no greater than 5.0 percent.

4,301,223

METHOD OF STABILIZING ORGANIC SUBSTRATE MATERIALS TO LIGHT

Kotaro Nakamura; Yoshiaki Suzuki; Hiroshi Hara; Satoru Sawada, and Shigeru Ohno, all of Minami-ashigara, Japan, assignors to Fuji Photo Film Co., Ltd., Minami-ashigara, Japan

Filed May 19, 1980, Ser. No. 151,081

Claims priority, application Japan, May 17, 1979, 54-60728

Int. Cl.³ G03C *7/00*

U.S. Cl. 430—17 **8 Claims**

7. A color photographic material comprising at least one exposed and developed silver halide emulsion which contains a photographic dye image, wherein at least one layer containing a photographic dye image or an adjacent layer contains a complex of the formula (I) in an amount effective to stabilize the photographic dye image:

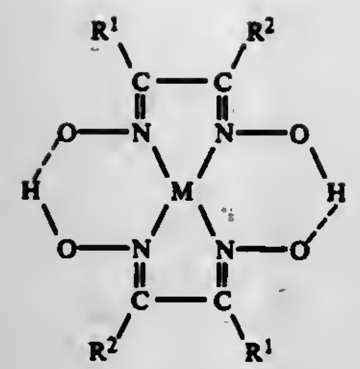

(I)

wherein M represents copper, cobalt, nickel, palladium or platinum, and R^1 and R^2 independently represent a hydrogen atom, an alkyl group, an aryl group, an acyl group, an N-alkylcarbamoyl group, an N-arylcarbamoyl group, or an N-alkylsulfamoyl group, an N-arylsulfamoyl group, an alkoxycarbonyl group or an aryloxycarbonyl group.

4,301,224

ELECTROPHOTOGRAPHIC ELEMENT WITH A COMBINATION OF BINDER RESINS

Akio Kozima, Hiratsuka, and Eiichi Akutsu, Ichikawa, both of Japan, assignors to Ricoh Co., Ltd., Tokyo, Japan

Filed Jul. 10, 1980, Ser. No. 168,215

Claims priority, application Japan, Jul. 13, 1979, 53-89071

Int. Cl.³ G03G *5/05, 5/06, 5/14*

U.S. Cl. 430—58 **11 Claims**

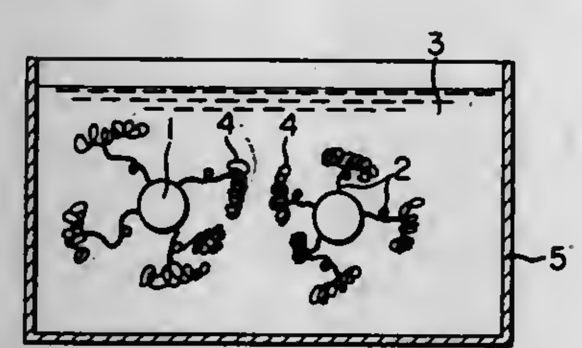

1. In an electrophotographic element comprising an electrically conductive substrate having a charge generation layer and a charge transport layer thereon, the improvement which comprises: said charge generation layer consists essentially of particles of photoconductive organic pigment dispersed in a binder consisting essentially of two different resins R_1 and R_2; said charge generation layer having been prepared by forming a dispersion of said particles of photoconductive organic pigment in a solution of resin R_1 dissolved in a solvent S for resin R_1, then adding to said dispersion a solution of resin R_2 dissolved in a further quantity of said solvent S and mixing same to form a coating mixture, then forming said charge generation layer from said coating mixture and then evaporating said solvent S; the difference between the solubility parameters of said resin R_1 and said solvent S being less than about 1.0, the difference between the solubility parameters of said resin R_1 and said resin R_2 being in the range of from 0.2 to 2.2, and the difference between the solubility parameters of said resin R_1 and said solvent S being less than the difference between the solubility parameters of said resin R_2 and said solvent S.

4,301,225

ALCOHOL SOLUBLE, ORGANIC PHOTOCONDUCTOR CONTAINING POLYMERIC PROTECTIVE LAYER ON ELECTROPHOTOGRAPHIC MATERIAL

Heinz Herrmann, and Detlef Winkelmann, both of Wiesbaden, Fed. Rep. of Germany, assignors to Hoechst Aktiengesellschaft, Fed. Rep. of Germany

Continuation of Ser. No. 628,498, Nov. 3, 1975, abandoned. This application Nov. 26, 1979, Ser. No. 97,456

Claims priority, application Fed. Rep. of Germany, Nov. 6, 1974, 2452623

Int. Cl.³ G03G *5/06, 5/14*

U.S. Cl. 430—66 **2 Claims**

1. An electrophotographic material consisting essentially of an electrically conductive support, a photoconductive layer containing at least one organic photoconductive substance on said conductive support,

and a protective layer covering said photoconductive layer and being composed of at least one polymeric substance selected from the group consisting of polyvinyl acetate, polyvinyl butyral and nitrocellulose, said polymeric substance being soluble in a lower alcohol selected from the group consisting of methanol, ethanol, propanol, butanol, and mixtures thereof, said protective layer containing at least one photoconductive organic compound being soluble in said lower alcohol in a total quantity of about 1 to 20 percent by weight based on the weight of the polymeric substance and having a thickness of 1 to 5 μm.

2. An electrophotographic material according to claim 1 in which the polymeric substance of the protective layer is nitrocellulose soluble in a lower alcohol selected from the group consisting of methanol, ethanol, propanol, butanol, and mixtures thereof.

4,301,226

CRYSTALLIZATION INHIBITING MIXTURES OF ARYLMETHANE PHOTOCONDUCTORS

Lawrence E. Contois, Webster, and Norman G. Rule, Rochester, both of N.Y., assignors to Eastman Kodak Company, Rochester, N.Y.

Continuation-in-part of Ser. No. 962,433, Nov. 20, 1978, abandoned. This application Nov. 15, 1979, Ser. No. 94,524

Int. Cl.³ G03G *5/06*

U.S. Cl. 430—72 **11 Claims**

1. An electrophotographic element comprising a conductive support and an organic photoconductive layer containing a crystallization inhibiting mixture of at least two different organic photoconductors selected from the class of organic photoconductors represented by the formula

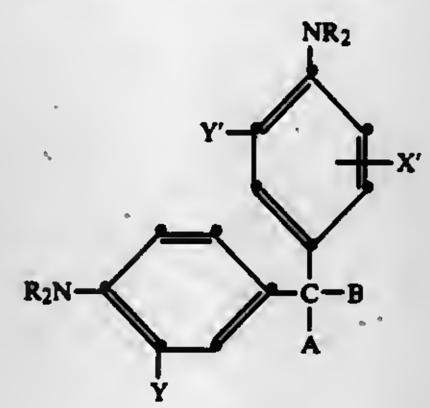

wherein

R is selected from the group consisting of alkyl, aralkyl and substituted and unsubstituted aryl;

X and X', which may be the same or different, are selected from the group consisting of hydrogen, alkyl, alkoxy, hydroxy, NO_2 and halogen;

Y and Y', which may be the same or different, are selected from the group consisting of hydrogen, alkyl, alkoxy, hydroxyl, halogen and NO_2;

A and B, when taken alone may be the same or different, are

selected from the group consisting of hydrogen, alkoxy, hydroxyl, halogen, substituted or unsubstituted aryl, alkyl, cycloalkyl having four to ten carbon atoms, and cycloalkenyl having four to eight carbon atoms; or

A and B, when taken together, represents sufficient atoms to form together with the carbon to which they are attached a substituted or unsubstituted carbocyclic ring having from 4 to 10 carbon atoms;

wherein each organic photoconductor may be present in said layer up to the limit of its solubility in the binder; and

wherein A and/or B in at least one of said photoconductors is substituted or unsubstituted aryl.

4,301,227

ELECTROPHOTOGRAPHIC LIQUID DEVELOPER

Seiji Hotta, Hirakata; Hitoshi Kawahara, Tokyo; Minoru Hatori, Takarazuka, and Fumio Koseki, Ibaraki, all of Japan, assignors to Sumitomo Chemical Company, Limited, Osaka, Japan

Continuation of Ser. No. 415,929, Nov. 15, 1973, abandoned. This application Jun. 24, 1976, Ser. No. 699,373

Claims priority, application Japan, Mar. 29, 1973, 48-36472

Int. Cl.³ G03G *9/12, 9/10*

U.S. Cl. 430—106 **6 Claims**

1. An electrophotographic liquid developer holding positive charges in a stable state, which consists essentially of (1) a carrier which is a high electrical resistivity liquid having above 10^{10}Ωcm of volume resistivity, (2) a resinous, waxy or varnish compound selected from the group consisting of oil-modified alkyd resins, rosin-modified phenol-formaldehyde resins, polyhydric alcohol esters of hydrogenated rosin, polyacryl ester resins, polymethacryl ester resins, polyvinyl acetate and polystyrene, and (3) as a color component, a phosphotungstomolybdic acid lake of a mixture of an indolenine dye selected from the group consisting of:

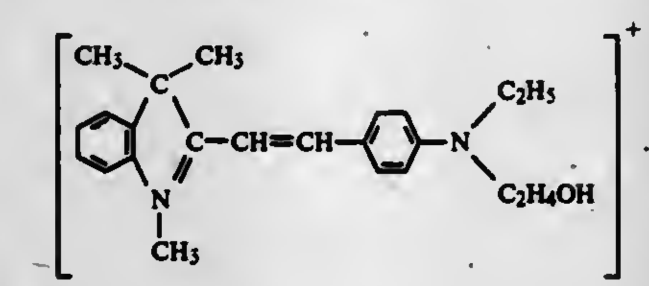

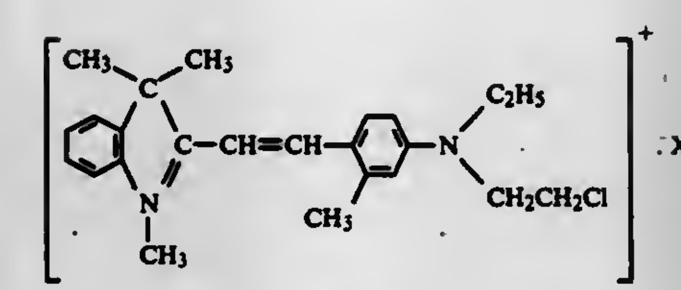

and

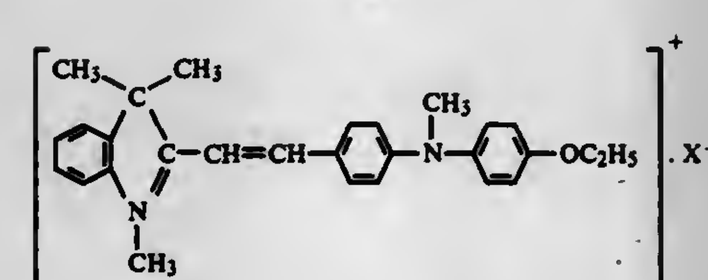

wherein X^- is a colorless anion, with a xanthene dye of the formula:

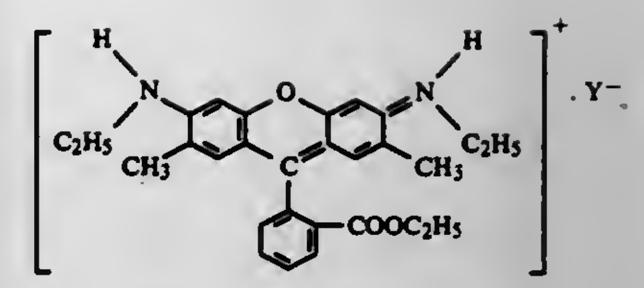

or

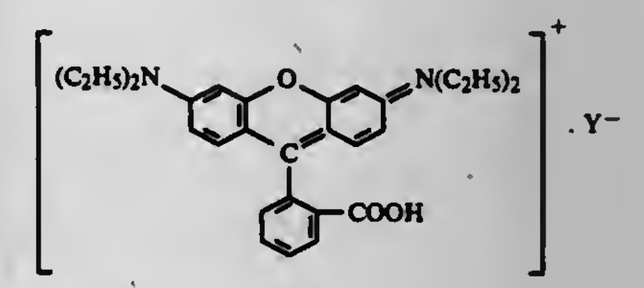

wherein Y^- is a colorless anion,

4,301,228

ELECTROGRAPHIC DEVELOPING MATERIAL AND DEVELOPING METHOD EMPLOYING SAID DEVELOPING MATERIAL

Toshitaro Kori, Tondabayashi, and Tateki Oka, Sakai, both of Japan, assignors to Minolta Camera Kabushiki Kaisha, Japan

Filed Mar. 26, 1980, Ser. No. 134,131

Claims priority, application Japan, Dec. 26, 1979, 54/171081

Int. Cl.³ G03G *9/14*

U.S. Cl. 430—122 **7 Claims**

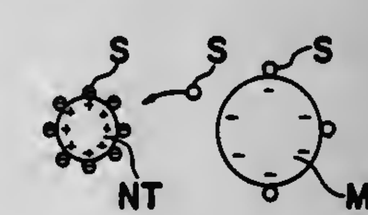

1. A developing method for use in repetitive electrophotography which comprises the steps of:

(1) stirring a developing material which comprises:

(a) electrically insulative toner particles comprising colorant and resin and having a volume resistance of above 10^{14}Ω.cm, an average particle diameter of 2 to 30 μm,

(b) carrier particles comprising magnetizable particles of average particle diameter of less than 3 μm and a bonding material, said carrier particles having a volume resistance higher than 10^{12}Ω.cm and an average particle diameter of 5 to 40 μm, and

(c) electrically insulative fine particles composed of metallic oxide and having an average particle diameter of less than 0.1 μm,

whereby components (a), (b) and (c) contact each other and whereby said carrier particles are triboelectrically charged to a polarity opposite that of said electrically insulative toner particles through frictional contact therewith, said electrically insulative fine particles are triboelectrically charged to a polarity opposite that of the electrically insulative toner particles through frictional contact therewith and wherein said fine particles are not triboelectrically charged upon frictional contact with said carrier particles,

to thereby produce a triboelectrically charged developing material in which said carrier particles and said electrically insulative fine particles are charged to the same polarity, which polarity is opposite that of said electrically insulative toner particles,

(2) developing electrostatic latent images into visible images

with said electrically insulative toner particles and said electrically insulative fine particles contained in said developing material by:

(a) forming a magnetic brush with said developing material,

(b) bringing said magnetic brush into sliding contact with said electrostatic latent images, and

(3) repeating said developing step while replenishing said developing material which has been consumed, with a replenishing developing material composed of said electrically insulative toner particles and said electrically insulative fine particles.

4,301,229

ELECTROLYTICALLY GRAINED ALUMINUM SUPPORT FOR MAKING A LITHOGRAPHIC PLATE AND PRESENSITIZED LITHOGRAPHIC PRINTING PLATE

Hirokazu Sakaki; Akira Shirai, and Azusa Ohashi, all of Shizuoka, Japan, assignors to Fuji Photo Film Co., Ltd., Minami-ashigara and Nippon Light Metal Co., Ltd., Tokyo, both of, Japan

Filed Mar. 27, 1979, Ser. No. 24,497

Claims priority, application Japan, Mar. 27, 1978, 53/35788

Int. Cl.[3] G03C *1/94;* **C25D** *9/02, 11/10, 11/12*

U.S. Cl. 430—158 **16 Claims**

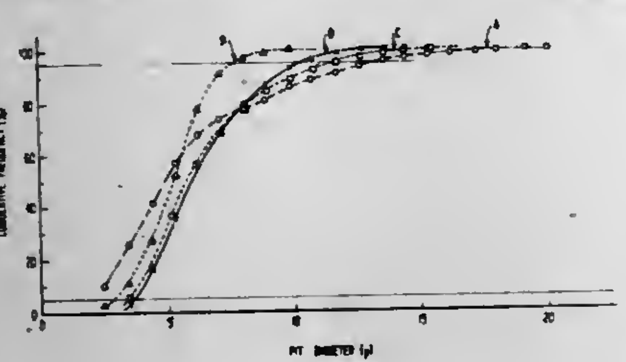

1. A support for a lithographic plate comprising an aluminum plate or an aluminum-alloy plate the surface of which has been grained such that the grain structure comprises pits and:

(i) the distribution of pit diameter is such that the pits corresponding to 5% and 95% on a cumulative frequency curve for pit diameter are 3μ or more and $10\pm1\mu$ in diameter, respectively; and

(ii) the center line average roughness (Ra) of said surface is in the range from 0.6 to 1.0μ.

6. In a light-sensitive material for the preparation of a lithographic printing plate comprising an aluminum or aluminum-alloy support having provided thereon a photosensitive layer, the improvement which comprises: said support having a grain structure comprising pits wherein:

(i) the distribution of pit diameter is such that the pits corresponding to 5% and 95% on a cumulative frequency curve for pit diameter is about 3 microns or more and about 10 ± 1 micron in diameter, respectively; and

(ii) The center line average roughness (Ra) of said surface is in the range of from about 0.6 to 1.0 micron.

8. The light-sensitive material of claim 6, wherein said photosensitive layer comprises a diazo compound.

4,301,230

ORIENTED POLYSTYRENE SUPPORT FOR PHOTOPOLYMERIZABLE ELEMENT

Tadashi Taguchi, Kawasaki; Noboru Fujikawa, Tokyo; Mitsuo Kohno, Yokohama; Katsumi Yoshitake, Yokosuka, and Kunio Satake, Yokohama, all of Japan, assignors to Asahi Kasei Kogyo Kabushiki Kaisha, Kitaku-Osaka, Japan

Division of Ser. No. 923,763, Jul. 11, 1978, Pat. No. 4,211,560. This application Dec. 18, 1979, Ser. No. 104,944

Claims priority, application Japan, Jul. 12, 1977, 52/82573; Dec. 26, 1977, 52/157091

Int. Cl.[3] G03C *1/76, 3/00, 1/78*

U.S. Cl. 430—273 **14 Claims**

1. A photosensitive element comprising a photopolymerizable composition layer and a transparent oriented film support laminated onto one surface of the photopolymerizable composition layer which support is soluble or dispersible in a liquid developer for the photopolymerizable composition layer and capable of transmitting actinic rays and which support is a styrene homopolymer or copolymer.

4,301,231

NEGATIVE RESIST FOR HIGH ENERGY RADIATION

Yuji Atarashi, and Mutsuo Kataoka, both of Kamakura, Japan, assignors to Toray Industries, Incorporated, Tokyo, Japan

Filed Feb. 15, 1980, Ser. No. 121,914

Int. Cl.[3] G03C *1/68*

U.S. Cl. 430—287 **5 Claims**

1. A resist material capable of forming a negative image by application of radiation, said material comprising an organic polymer with branches at least some of which contain vinyl silyl groups and are represented by the formula

$$\begin{array}{l} | \\ R^1 \\ | \\ Si-R^2_{3-n}(CH-CH_2)n \end{array}$$

wherein R^1 is a divalent organic bonding, R^2 is a monovalent organic group other than vinyl group and n is an integer of 1 to 3.

4,301,232

METHOD OF PRODUCING CONTINUOUS TONE GRADATION PRINTS

Allan S. Kullen, 7723 Groton Rd., Bethesda, Md. 20034, and Phillip Ratner, 10008 Hall Rd., Potomac, Md. 20854

Continuation-in-part of Ser. No. 94,786, Nov. 16, 1979, abandoned. This application Jun. 20, 1980, Ser. No. 161,594

Int. Cl.[3] G03C *5/00*

U.S. Cl. 430—300 **52 Claims**

1. A method of producing prints having continuous tone gradations comprising:

(a) selectively placing solvent on a semi-opaque substrate having a surface wherein the surface of the substrate is altered such that the substrate is able to hold a colorant;

(b) placing colorant on the areas of the substrate treated in step (a) prior to the solvent evaporating, thereby producing continuous tone gradations;

(c) transferring an image of the continuous tone gradation substrate of step (b) without interposition of a screen onto a print plate; and

(d) printing prints from the print plate.

4,301,233

BEAM LEAD SCHOTTKY BARRIER DIODE FOR OPERATION AT MILLIMETER AND SUBMILLIMETER WAVE FREQUENCIES

Joseph A. Calviello, Kings Park, N.Y., assignor to Eaton Corporation, Cleveland, Ohio

Continuation-in-part of Ser. No. 154,244, May 29, 1980. This application Jun. 3, 1980, Ser. No. 156,223

Int. Cl.[3] H01L *29/48*

U.S. Cl. 430—314 **3 Claims**

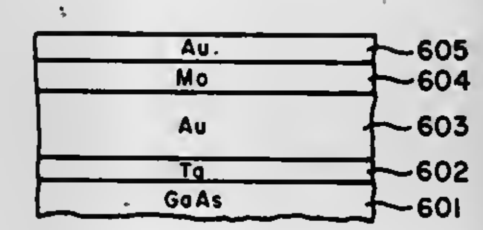

1. A process for producing a Schottky barrier junction device comprising the following steps:

(a) supplying a substrate with an N+layer covered with an N layer,

(b) depositing a first layer of tantalum on the N layer to form a Schottky barrier junction,

(c) depositing a first layer of gold over the tantalum layer,

(d) depositing a layer of molybdenum over the first gold layer,

(e) depositing a second layer of gold over the molybdenum,

(f) depositing a layer of photoresist over the second layer of gold,

(g) exposing and developing the photoresist to define the junction area by exposing the second layer of gold in the junction area,

(h) depositing a layer of chromium over the photoresist and the exposed junction area of the second gold layer,

(i) removing the photoresist to provide a chromium mask over the junction area,

(j) etching the second gold layer away except where it is protected by the chromium mask in the junction area,

(k) etching the molybdenum layer away except in the junction area,

(l) etching through a portion of the first gold layer away from the junction area,

(m) etching the molybdenum layer to produce an undercut about its periphery within the junction area,

(n) etching through the remainder of the first gold layer in the area away from the junction area,

(o) etching away the first tantalum layer except in the junction area,

(p) etching into the N layer except in the junction area to produce a mesa in the N layer in the junction area,

(q) depositing a layer of passivation over the device except on the under-cut molybdenum layer which is shielded from this deposition by the gold and chromium layers above the molybdenum layers,

(r) etching through the molybdenum layer left unprotected by the absence of the passivation layer, and

(s) removing the second layer of gold and the chromium layers after etching through the molybdenum layer.

4,301,234

PROCESS FOR THE PREPARATION OF RELIEF-TYPE RECORDINGS USING DIAZONIUM CONDENSATION PRODUCT AND AMINE RESIN AS LIGHT-SENSITIVE RECORDING LAYER AND INCOHERENT RADIATION SOURCE FOR RECORDING IMAGE

Fritz Uhlig, Wiesbaden, Fed. Rep. of Germany, assignor to Hoechst Aktiengesellschaft, Fed. Rep. of Germany

Continuation of Ser. No. 41,812, May 23, 1979, abandoned. This application Aug. 29, 1980, Ser. No. 182,388

Claims priority, application Fed. Rep. of Germany, May 26, 1978, 2822887

Int. Cl.[3] G03C *5/08;* **G03F** *7/08*

U.S. Cl. 430—325 **5 Claims**

1. In the process for the preparation of relief-type recordings which comprises exposing, under a master, a light-sensitive layer of a recording material comprising a support and a light-sensitive layer thereon to an incoherent actinic light source which emits sufficiently intensively within the near ultraviolet and/or short-wave visible range of the spectrum, and removing the unexposed areas of the light-sensitive layer by washing with a developer, said light-sensitive layer consisting of a diazonium salt polycondensation product composed of recurrent units of the general types

$(A-N_2X)$ and (B)

which are connected with each other by bivalent intermediate members derived from a condensable carbonyl compound and wherein:

A is the radical of a diazonium salt which comprises at least two isocyclic or heterocyclic aromatic rings and which in at least one position of its molecule is capable of condensation with formaldehyde in an acid medium,

B is the radical of a compound free of diazonium groups which in at least one position of its molecule is capable of condensation with formaldehyde in an acid medium, and

X is the anion of the diazonium salt

the improvement that the light-sensitive layer additionally contains about 7 to 15 parts by weight of amine resin per part by weight of the polycondensation product, said amine resin being a condensation product of formaldehyde with urea, a urethane, aniline, or melamine, and

about 0 to 20 percent by weight of the total quantity of resin present, of at least one resin selected from the group consisting of phenol resins, unmodified epoxy resins, oil-modified alkyl resins, polyamides, polyurethanes, polyvinyl resins, acrylic acid resins, polyvinyl acetates, polyvinyl chloride, polyesters, nitrocellulose and polyvinyl acetals,

and exposing said light-sensitive layer to said incoherent actinic light source for a few seconds for 1 μm of layer thickness.

4,301,235

PROCESS AND MATERIAL FOR FORMING COLOR PHOTOGRAPHIC IMAGE

Seiji Ichijima, and Nobuo Furutachi, both of Minami-ashigara, Japan, assignors to Fuji Photo Film Co., Ltd., Minami-ashigara, Japan

Filed Sep. 5, 1980, Ser. No. 184,454

Claims priority, application Japan, Sep. 5, 1979, 54/114004

Int. Cl.[3] G03C *7/00*

U.S. Cl. 430—387 **26 Claims**

1. A process for forming a color photographic image comprising processing a silver halide color photographic light-sensitive material in the presence of a 5-pyrazolone magenta coupler represented by the formula (I):

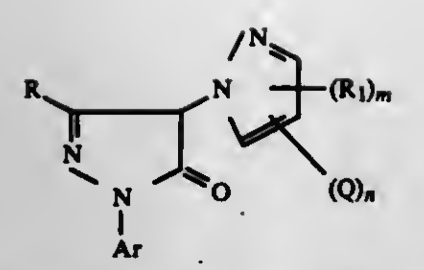

(I)

wherein R represents an acylamino group, an anilino group or a ureido group; R_1 represents a nitro group, a nitroso group, an amino group, an acylamino group represented by the formula (II)

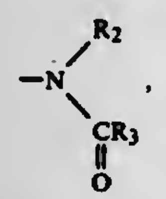

(II)

a sulfonamido group represented by the formula (III)

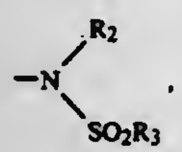

(III)

a urethane group, a diacylamino group represented by the formula (V)

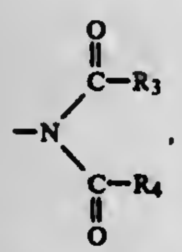

(V)

or a ureido group, wherein R_2 in the formula (II) and (III) represents a hydrogen atom, a straight chain or branched chain alkyl group, an alkenyl group, a cycloalkyl group, an aralkyl group, an aryl group or a heterocyclic group, and R_3 in the formula (II) and (III) represents a straight chain or branched chain alkyl group, an alkenyl group, a cycloalkyl group, an aralkyl group, an aryl group or a heterocyclic group; or R_2 and R_3 in the formula (II) and (III) together form a 5-membered, 6-membered, or 7-membered nitrogen-containing heterocyclic ring, and R_3 and R_4 in the formula (V) each represents a straight chain or branched chain alkyl group, an alkenyl group, a cycloalkyl group, an aralkyl group, an aryl group or a heterocyclic group, or R_3 and R_4 in the formula (V) together form a 5-membered, 6-membered, or 7-membered nitrogen-containing heterocyclic ring; Q represents a hydrogen atom, a halogen atom, a substituted or unsubstituted alkyl group, an alkenyl group, a cycloalkyl group, an aralkyl group, an alkoxy group, an aryloxy group, a carboxy group, a substituted or unsubstituted aryl group, a substituted or unsubstituted heterocyclic group, a thiourethane group, a thioureido group, an acylhydrazino group, an alkylamino group, a dialkylamino group, an anilino group, an alkylthio group, a mercapto group, an arylthio group, an alkylsulfinyl group, an alkylsulfonyl group, an arylsulfinyl group, an arylsulfonyl group, a sulfamoyl group, a sulfo group, a thiocyano group, a hydroxy group, an aminocarbonyloxy group, an acyloxy group, a sulfonyloxy group, an alkylcarbonyl group, an arylcarbonyl group, an alkoxycarbonyl group, an aryloxycarbonyl group, a carbamoyl group, an aralkyloxycarbonyl group, or a cyano group; Ar represents a phenyl group which may be substituted with one or more halogen atoms, alkyl groups, alkoxy groups and cyano groups; m represents an integer; n represents 0, 1 or 2; and m and n must satisfy the following relation $1 \leqq m+n \leqq 3$.

4,301,236

PHOTOGRAPHIC BLEACH SOLUTIONS

Yoshio Idota, and Minoru Yamada, both of Minami-ashigara, Japan, assignors to Fuji Photo Film Co., Ltd., Kanagawa, Japan

Filed Jan. 23, 1980, Ser. No. 114,456

Claims priority, application Japan, Jan. 23, 1979, 54-6645

Int. Cl.^{3} G03C *5/32*

U.S. Cl. 430—393 **23 Claims**

9. In a process for developing a color photographic material including a bleaching step, the improvement which comprises bleaching said material in a solution containing hydrogen peroxide and/or a compound capable of releasing hydrogen peroxide, an organic metal complex salt which is a chelate of an aminopolycarboxylic acid, an organic phosphonic acid, or a polybasic organic acid and a high valent metal ion, and at least one aromatic sulfonic acid or salt thereof, said aromatic sulfonic acid or salt thereof being present in a concentration of 10^{-3} to 0.1 mole per liter of bleaching solution.

4,301,237

METHOD FOR EXPOSING SUBSTRATES TO X-RAYS

John A. Burns, New Hope, Pa., assignor to Western Electric Co., Inc., New York, N.Y.

Division of Ser. No. 57,065, Jul. 12, 1979, Pat. No. 4,260,670. This application Sep. 29, 1980, Ser. No. 191,627

Int. Cl.^{3} G03C *5/04, 5/06*

U.S. Cl. 430—394 **1 Claim**

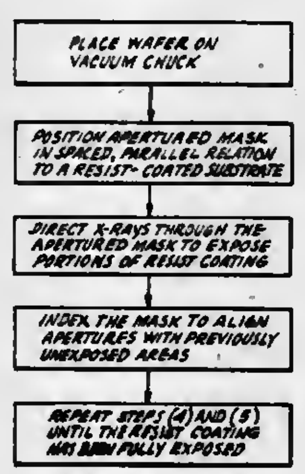

1. A method for selectively exposing a resist-coated substrate to X-ray radiation, comprising the steps of:

directing the X-ray radiation through a mark comprising a checkerboard array of apertures having metallized X-ray opaque patterns aligned therewith to selectively expose approximately one-half of the coated substrate;

indexing the substrate relative to the mask to align the mask apertures with the remaining unexposed portions of the substrate; and

directing X-ray radiation through the patterned apertures in the mask to selectively expose the remaining one-half of the coated substrate.

4,301,238

METHOD FOR THE MANUFACTURE OF SILVER HALIDE PHOTOGRAPHIC MATERIAL

Sadayuki Miyazawa; Takashi Kadowaki, and Isao Yamamoto, all of Odawara, Japan, assignors to Konishiroku Photo Industry Co., Ltd., Tokyo, Japan

Filed Jul. 21, 1980, Ser. No. 170,942

Claims priority, application Japan, Jul. 23, 1979, 54-93536

Int. Cl.^{3} G03C *1/76*

U.S. Cl. 430—495 **4 Claims**

1. In a method for the manufacturing of a silver halide photographic material having a layer containing gelatin coated on a support, the improvement which comprises drying the coated layer so that the surface temperature of the layer during the falling rate drying period is more than 5° C. above the melting point of the layer during drying and the jelly strength of said gelatin being at least 200 g according to the PAGI method.

4,301,239

ANTISTATIC BACKING LAYER FOR UNSUBBED POLYESTER FILM

Conrad E. Miller, Hendersonville, N.C., assignor to E. I. Du Pont de Nemours and Company, Wilmington, Del.

Filed Dec. 5, 1979, Ser. No. 100,520

Int. Cl.^{3} G03C *1/78*

U.S. Cl. 430—510 **9 Claims**

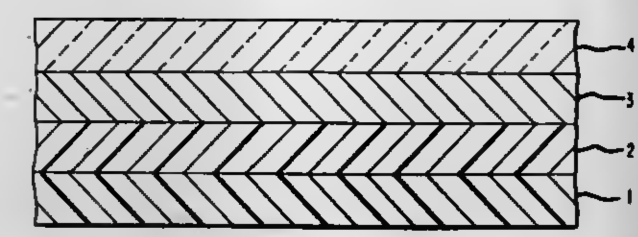

1. An article of manufacture consisting of a dimensionally stable energy-treated film base coated on one side with an opaque antistatic backing layer, characterized in that the backing layer is applied from an aqueous dispersion of a carbon-filled film-forming polyacrylate containing free carboxyl groups, in admixture with a polyfunctional aziridine cross-linking agent, followed by drying and thermal curing and a silver halide emulsion layer coated on the opposite side of the film base.

4,301,240

PHOTOGRAPHIC SILVER HALIDE MATERIAL WITH CROSS-LINKED PARTICULATE ACRYLIC OR METHACRYLIC POLYMER

Rolf Brück, and Erich Wolff, both of Leverkusen, Fed. Rep. of Germany, assignors to Agfa-Gevaert Aktiengesellschaft, Leverkusen, Fed. Rep. of Germany

Filed Dec. 28, 1978, Ser. No. 973,900

Claims priority, application Fed. Rep. of Germany, Jan. 5, 1978, 2800466

Int. Cl.^{3} G03C *1/32, 1/37*

U.S. Cl. 430—537 **7 Claims**

1. A photographic light sensitive material having at least one silver halide emulsion layer, characterized in that at least one of the layers other than a layer containing silver halide, contains an additive insoluble in photographic processing consisting of a cross-linked polymer of acrylic acid or methacrylic acid which has a particle size in the dry state of from 0.01 to 5μ and a swelling factor in water limited to from 4 to 40, which polymer was prepared by crosslinking in covalent bonds either:

(a) by inverse emulsion polymerization (water-in-oil) of 75% to 95% by weight acrylic or methacrylic acid monomers in the presence of water-soluble polyfunctional cross-linking monomers and an emulsifier, breaking down of the emulsion and redispersion of the polymer particles in water; or

(b) by emulsion polymerization of short chained aliphatic esters or acrylic or methacrylic acid in water in the presence of unsaponifiable and substantially water insoluble polyfunctonal cross-linking monomers and an emulsifier, followed by saponification of the polymer, said particles being resistant to diffusion.

2. A material according to claim 1, characterized in that polymer particles measuring from 1 to 3μ and having a swelling factor of from 8 to 40, are contained in an outer gelatine-containing layer in a quantity of from 5 to 30% by weight, based on the dry weight of the layer.

4,301,241

PROCESS FOR FORMING LIGHT-SENSITIVE SILVER HALIDE CRYSTALS

Mitsuo Saito, Minami-ashigara, Japan, assignor to Fuji Photo Film Co., Ltd., Minami-ashigara, Japan

Filed May 31, 1979, Ser. No. 44,133

Claims priority, application Japan, Apr. 23, 1979, 54-50704

Int. Cl.^{3} G03C *1/02*

U.S. Cl. 430—569 **5 Claims**

1. A process for forming light-sensitive silver halide crystals by adding silver ion in the form of a silver salt aqueous solution and halide ion in the form of a halide salt aqueous solution to a solution containing bromide ion in the presence of a protective colloid, which comprises producing seed crystals containing multiple twin crystal grains during a crystal nuclei-forming period, maintaining the pBr of the system at about 4.8 to 2.0 during at least the first third of a subsequent crystal-growing period, and increasing the rates of silver ion and halide ion addition to levels at which the crystal growth becomes about 30 to 100% of the critical crystal growth rate, including gradually increasing the concentration of said silver salt aqueous solution and said halide salt aqueous solution during said crystal-growing period.

4,301,242

EMULSION MIXTURE FOR COLOR REVERSAL (REFLECTION VIEWING) MATERIAL

Walter Pätzold, and Karl Czernik, both of Leverkusen, Fed. Rep. of Germany, assignors to Agfa-Gevaert Aktiengesellschaft, Leverkusen, Fed. Rep. of Germany

Continuation of Ser. No. 879,264, Feb. 21, 1978, abandoned. This application Oct. 10, 1979, Ser. No. 83,229

Claims priority, application Fed. Rep. of Germany, Feb. 26, 1977, 2708466

Int. Cl.^{3} G03C *1/36*

U.S. Cl. 430—569 **2 Claims**

1. A process for the preparation of a silver halide emulsion layer for reversal photographic materials comprised of at least two individual emulsions, by

(a) precipitation of the silver halide in a protective colloid,

(b) physical and chemical ripening including precipitating and ripening separate and individual emulsions under conditions providing particle size distributions of a narrow particle size distribution, and resulting in substantially identical particle sizes and identical size distribution

(c) during said preparation process and prior to completion of ripening adding to only one emulsion at least one compound in a desensitizing amount and selected from the group consisting of rhodium, copper and lead compounds,

thereby providing in said emulsion a differential in desensitizing

and then mixing of the individual emulsions,

applying the mixture in the photographic material to a support in a layer,

in which material the individual emulsions are desensitized to differing extents by the addition of at least one desensitizing compound to said one emulsion, of said desensitizing compounds

whereby the individual emulsions in the applied layer prior to exposure to light contain different desensitization values than the layer has when subjected to variations in development or developer a minimal displacement of contrast gradation curves at the region of relatively high intensity of exposure.

4,301,243
PHOTOGRAPHIC RECORDING MATERIAL

Walter Puschel; Heinrich Odenwalder, and Erwin Ranz, all of Leverkusen, Fed. Rep. of Germany, assignors to AGFA-Gevaert Aktiengesellschaft, Leverkusen, Fed. Rep. of Germany

Filed Dec. 12, 1979, Ser. No. 103,000
Claims priority, application Fed. Rep. of Germany, Dec. 23, 1978, 2855997
Int. Cl.[3] G03C *1/40, 1/48, 1/10, 1/06*

U.S. Cl. 430—613 4 Claims

1. A photographic recording material comprising at least one light-sensitive silver halide emulsion layer and containing in at least one layer a nondiffusible compound which is capable of releasing a diffusible development inhibitor under the conditions of alkaline development of silver halide,

wherein the improvement comprises said non-diffusible compound containing layer contains a non-diffusible development inhibitor releasing compound which releases mercapto development inhibitors and contains a scavenging compound which is capable of binding free mercapto development inhibitor at pH values below 7 but is capable of scavenging free mercapto development inhibitor to a much less extent at pH values from 9 to 13 and

wherein the scavenging compound corresponds to the following formula

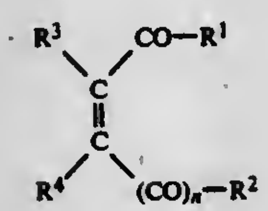

in which

R^1 and R^2 represent each individually hydrogen or a substituent selected from the group consisting of alkyl groups, aryl groups, hydroxy, alkoxy groups, —NR-alkyl and —NR-aryl groups, wherein R represents hydrogen or alkyl; or both R^1 and R^2 together complete a 5-or 6-membered carbocyclic or heterocyclic ring;

R^3 and R^4 represent each individually hydrogen or a substituent selected from the group consisting of alkyl groups, alkoxy groups, aryl groups, halogen atoms, alkoxy carbonyl groups and cyano;

n=0 or 1.

4,301,244
QUANTITATIVE ANALYSIS OF FREE FATTY ACID AND REAGENT COMPOSITION THEREFOR

Toshiro Kikuchi, and Makoto Ando, both of Tsuruga, Japan, assignors to Toyo Boseki Kabushiki Kaisha, Japan

Filed Feb. 13, 1980, Ser. No. 121,166
Claims priority, application Japan, Feb. 13, 1979, 54-15696
Int. Cl.[3] C12Q *1/00, 1/26*

U.S. Cl. 435—4 8 Claims

1. A method for the quantitative analysis of a free fatty acid which comprises (1) the first step of treating a sample containing the free fatty acid with acyl-coenzyme A synthetase in the presence of adenosine triphosphate and coenzyme A to form acyl-coenzyme A, (2) the second step of oxidizing said acyl-coenzyme A, in the presence of oxygen, with acyl-coenzyme A oxidase produced by a microorganism of the genus Candida to form enoyl-coenzyme A and hydrogen peroxide, and (3) the third step of (a) measuring the amount of the formed enoyl-coenzyme A or hydrogen peroxide or (b) measuring the

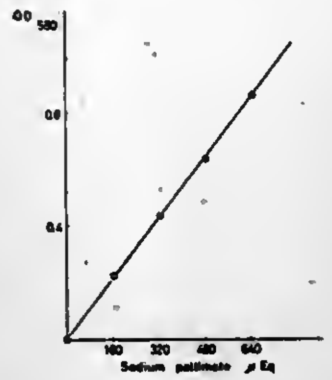

amount of oxygen consumed in said oxidation reaction, to thereby determine the amount of free fatty acid in said sample.

4,301,245
CHROMOGENIC METHOD OF DETECTING ENDOTOXINS IN BLOOD

Gene Lindsay, Middletown, and Andrew J. O'Beirne, Walkersville, both of Md., assignors to Dynasciences Corporation, Los Angeles, Calif.

Filed May 29, 1980, Ser. No. 154,360
Int. Cl.[3] C12Q *1/44*

U.S. Cl. 435—4 11 Claims

1. An improved chromogenic method of detecting endotoxins in blood, which method comprises:

a. reacting an untreated blood fraction sample which comprises serum and/or plasma with king crab amebocyte lysate and a selected substrate containing a selected colorimetric indicator capable of being split from said substrate by an enzyme, said reaction being carried out for a time sufficient to cause any endotoxin present in the blood fraction to effect the generation in the lysate of enzyme capable of splitting off said colorimetric indicator from said substrate and to cause said splitting to occur; and,

b. thereafter determining said endotoxin concentration colorimetrically, said endotoxin concentration being proportional to the concentration of said color indicator split from said substrate.

4,301,246
PROCESS FOR CHENODEOXYCHOLIC ACID PRODUCTION

Carl Despreaux, Cedar Grove; Thomas A. Narwid, Pompton Plains; Norberto J. Palleroni, North Caldwell, and Milan R. Uskokovic, Upper Montclair, all of N.J., assignors to Hoffmann-La Roche Inc., Nutley, N.J.

Division of Ser. No. 29,420, Apr. 12, 1979, Pat. No. 4,230,625. This application Jan. 18, 1980, Ser. No. 113,019
Int. Cl.[3] C12P *33/06*

U.S. Cl. 435—58 5 Claims

1. A process for the preparation of 7-alpha-hydroxy-3-keto-bisnorcholenol which process comprises 7-alpha-hydroxylating 3-keto-bisnorcholenol by contacting said 3-keto-bisnorcholenol with a microorganism selected from the group consisting of *Botryodiplodia theobromae* IFO 6469, DSM 62-678, DSM 62-679; *Lasiodiplodia theobromae* ATCC 28570; *Botryosphaeria ribis* ATCC 22802, *B. berengeriana* ATCC 12557, *B. rhodina* CBS 374.54, CBS 287.47 and CBS 306.58, said microorganism being in the form of a culture broth, mycelia or an enzyme extract thereof.

4,301,247
METHOD FOR IMPROVING XANTHAN YIELD

William P. Weisrock, Tulsa, Okla., assignor to Standard Oil Company (Indiana), Chicago, Ill.

Filed Dec. 8, 1980, Ser. No. 214,398
Int. Cl.[3] C12P *19/06*

U.S. Cl. 435—104 11 Claims

1. A process for the production of heteropolysaccharide comprising culturing a microorganism of the genus Xanthomonas in a nutrient medium, said nutrient medium containing a sufficient amount of an additive compound selected from a group consisting of deoxycholic acid, cholic acid, salts thereof and mixtures thereof.

4,301,248
FERMENTATION PROCESS FOR MAKING RACHELMYCIN

Donald E. Nettleton, Jr., Jordon; James A. Bush, Fayetteville, and William T. Bradner, Manlius, all of N.Y., assignors to Bristol-Myers Company, New York, N.Y.

Continuation-in-part of Ser. No. 106,225, Dec. 21, 1979, abandoned, which is a continuation of Ser. No. 15,976, Feb. 28, 1979, abandoned. This application Oct. 6, 1980, Ser. No. 194,202
Int. Cl.[3] C12P *17/18*

U.S. Cl. 435—119 4 Claims

1. A process for producing rachelmycin which comprises cultivating a rachelmycin-producing strain of Streptomyces sp. having the identifying characteristics of ATCC 31128 or *Streptomyces anandii* subsp. *arraffinosus* having the identifying characteristics of ATCC 31431, or a mutant thereof, in an aqueous nutrient medium under submerged aerobic conditions until a substantial amount of rachelmycin is produced by said organism in said culture medium.

4,301,249
HIGH TITER PRODUCTION OF HEPATITIS A VIRUS

Henry Z. Markus, Wyncote, and William J. McAleer, Ambler, both of Pa., assignors to Merck & Co., Inc., Rahway, N.J.

Filed Jul. 23, 1980, Ser. No. 171,621
Int. Cl.[3] C12N *7/00*

U.S. Cl. 435—235 9 Claims

1. A method for enhancing the yield of HAV in in vitro cell culture which comprises growing the virus in a susceptible cell culture planted on a hollow fiber capillary unit under conditions which permit viral replication.

3. A method according to claim 1 wherein the cell culture is grown in two different elevated temperature stages with a first growth stage at an elevated temperature and with a second growth stage at a lower but still elevated temperature which is above room temperature with a purine optionally being present during the second growth stage in an amount effective to improve the yield of hepatitis A virus.

4,301,250
METHOD OF PRODUCING HEPATITIS B SURFACE ANTIGEN

William J. McAleer, Ambler, and Henry Z. Markus, Wyncote, both of Pa., assignors to Merck & Co., Inc., Rahway, N.J.

Filed Nov. 2, 1979, Ser. No. 90,169
Int. Cl.[3] C12N *5/02;* C12P *21/00;* C12M *3/04*

U.S. Cl. 435—241 9 Claims

1. A method for preparing hepatitis B surface antigen which comprises growing cells which shed hepatitis B surface antigen in the presence of a nutrient medium in a first growth stage at a temperature of about 37° C. and a second growth stage at a temperature of from about 30° to 34° C.

4,301,251
PROCESS FOR PRODUCING ROSE OIL

Galina N. Ramyantseva, Ryazansky prospekt, 78/1, kv. 208; Renata N. Grebeshova, ulitsa akademika Pavlova, 40, kv. 31; Kalust A. Kalenyants, mikroraion Kapotnya, kvartal 4, dom 3, kv. 34; Irina V. Artemieva, Nagatinskaya naberezhnaya, 22, korpus 2, kv. 192, all of Moscow, and Raisa D. Lomakina, ulitsa Zheleznodorozhnaya, 3, kv. 66, Simferopol, all of U.S.S.R.

Filed Feb. 6, 1980, Ser. No. 119,120
Claims priority, application U.S.S.R., Feb. 7, 1979, 2724414
Int. Cl.[3] C07G *17/00*

U.S. Cl. 435—267 6 Claims

1. A process for producing rose oil from vegetable feed stock selected from fresh rose flowers and waste rose flowers which have been subjected to a previous extraction, comprising:

subjecting said vegetable stock to an preliminary enzymatic treatment by contacting said vegetable stock with an enzymatic preparation in an amount of about 0.1 to 0.5% by weight based on the weight of said feedstock, said enzymatic preparation comprising products of biosynthesis of microorganisms from at least one genus selected from the group consisting of Trichoderma and Geotrichum and containing active beta-glucoside-hydrolases specific with respect to rose glycosides and enzymes which hydrolyze structural polysaccharides of said vegetable stock, said preliminary treatment being carried out in an aqueous medium containing about 1 part by wieght of said vegetable feedstock per 1.5 to 3.0 parts by weight of water, at a temperature of about 40° to 45° C., at the initial pH of the mixture of feedstock and water, for about 2 to 4 hours,

hydrodistilling the thus treated vegetable feedstock and recovering rose oil from the resulting hydrodistillate.

4,301,252
CONTROLLED ENVIRONMENT INCUBATOR FOR LIGHT MICROSCOPY

Fraser L. Baker, 6227 Orange St., Los Angeles, Calif. 90048, and John H. Baumann, 836 Wartman Ave., Kingston, Ontario, K7M4M5, Canada

Filed Apr. 4, 1980, Ser. No. 137,274
Int. Cl.[3] C12M *1/38*

U.S. Cl. 435—290 8 Claims

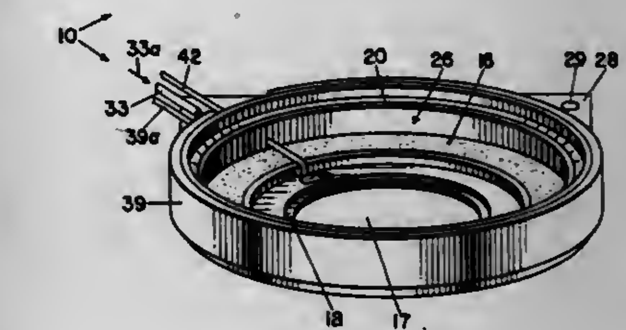

1. A miniature incubator for light microscopes for use in conjunction with a culture dish, comprising a base platform, an outer peripheral wall extending upward from said base platform, said outer peripheral wall having an upper portion, said platform and said outer pheripheral wall providing an incubating chamber having an open end at said upper portion of said wall, cover means for closing said open end, means for nesting and retaining said cover means in said upper portion of said outer peripheral wall, comprising a peripheral recess formed in said upper portion, cover seal means located in said recess between said upper portion and said cover, thermal means for heating said miniature incubator, temperature sensor means for controlling the temperature of said incubator, said temperature sensor means being located within said incubating chamber on said base platform and in intimate contact with said base plat-

form, means for locating said culture dish within said incubator on said base platform, means in said base platform for providing viewing access through the bottom surface of said culture dish, means in said cover for providing viewing access to the top surface of said culture dish, hollow fiber tube purging means in said incubator for conducting purging gases from outside said incubator into said incubator chamber, humidifying means in said incubator chamber for humidifying said gases and said incubator chamber, said hollow fiber purging tube means being in intimate contact with said humidifying means, walls of said hollow fiber purging tube means being suitably porous to permit transmission of humidity from said humidifying means to inside walls of said hollow fiber purging tube means thereby to humidify said gases passing therethrough, and means for attaching said miniature incubator to the stage motion controls of a microscope stage.

4,301,253

PROCESS FOR THE SELECTIVE PRODUCTION OF ETHANOL AND METHANOL DIRECTLY FROM SYNTHESIS GAS

Barbara K. Warren, Charleston, W. Va., assignor to Union Carbide Corporation, New York, N.Y.

Filed Sep. 25, 1980, Ser. No. 190,905

Int. Cl.³ C07C *27/06, 31/08*

U.S. Cl. 518—700 **8 Claims**

1. A process for the selective, direct production of ethanol or mixtures thereof with other alkanols containing up to three carbon atoms, which method comprises the reaction of carbon monoxide and hydrogen in contact with a homogeneous ruthenium catalyst, a halogen or halide promoter and an organic phosphine oxide compound, wherein said process is carried out at:

(a) a total pressure of from 500 to 20,000 psi,
(b) a temperature of from 100° C. to 350° C.,
(c) the carbon monoxide to hydrogen ratio of the gas mixture charged is from 0.1:1 to 10:1,
(d) the ruthenium compound charged is capable of generating a soluble ruthenium complex under the reaction conditions and it is charged at a concentration of from 0.01 to 30 weight percent based on the total weight of the reaction mixture,
(e) said promoter is (i) elemental iodine or bromine or a compound thereof which is or is capable of generating hydrogen iodide or hydrogen bromide during the reaction and is charged at an amount sufficient to generate a hydrogen halide to ruthenium atom mole ratio of from 0.001:1 to 5:1 in the reaction mixture, or (ii) an alkali metal halide at a ratio to ruthenium atom as high as 20:1, or (iii) a mixture thereof
(f) said organic phosphine oxide is charged at a concentration of from 1 to 100 weight percent of total solvent charged to the reactor.

4,301,254

PROCESS FOR THE PRODUCTION OF POLY(ALDEHYDE AMINOSILICON ACID) RESINOUS PRODUCTS AND FOAMS

David H. Blount, 5450 Lea St., San Diego, Calif. 92105

Division of Ser. No. 130,576, Mar. 14, 1980, Pat. No. 4,252,934, which is a continuation-in-part of Ser. No. 908,106, May 22, 1978, which is a continuation-in-part of Ser. No. 845,464, Oct. 25, 1977, Pat. No. 4,120,937. This application Feb. 17, 1981, Ser. No. 235,041

Int. Cl.³ C08J *9/14;* **C08G** *2/00*

U.S. Cl. 521—154 **22 Claims**

1. The process for the production of poly(aldehyde aminosilicon acid) foam by mixing and reacting 1 to 2 parts by weight of an amino compound with about 1 part by weight of halosilicon acids to produce an aminosilicon acid compound, than adding an aldehyde compound in an amount of 1 to 5 parts by weight to 1 to 2 parts by weight of the aminosilicon acid, up to 50% by weight, percentage based on weight of the reactants, of a blowing agent composed of an inert liquid, boiling at temperatures from −25° C. to +80° C., and an acid catalyst in an aqueous solution wherein the pH is 4 to 6, then reacted, thereby producing a poly(aldehyde aminosilicon acid) foam.

4,301,255

NOVEL ALLOY COMPOSITIONS AND PRODUCTS

Ralf Korpman, Bridgewater, N.J., assignor to Permacel, New Brunswick, N.J.

Continuation-in-part of Ser. No. 54,540, Jul. 5, 1979, abandoned. This application May 5, 1980, Ser. No. 142,692

Int. Cl.³ C08L *53/00*

U.S. Cl. 525—92 **13 Claims**

1. A film and sheet forming alloy composition comprising
(a) from about 5 to about 95 parts by weight of a thermoplastic-elastomeric block copolymer component, wherein the block copolymer is an A—B—A or A—B block copolymer or a mixture thereof in which A represents an alkenylarene polymer block and b represents a polymer block of a conjugated lower aliphatic diene and
(b) correspondingly from about 95 to 5 parts by weight of a copolyester component, wherein the copolyester is a polymeric ester of at least two different ester units, each ester unit being a condensation product of a dicarboxylic acid and an aliphatic diol, said ester units being represented by the formulas

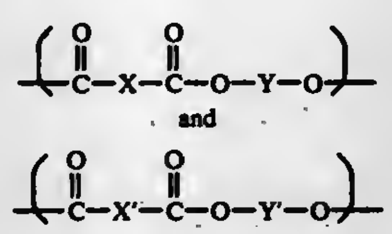

wherein X and X′ are nuclei of dicarboxylic acids and Y and Y′ are nuclei of aliphatic diols, and wherein each ester unit is characterized by having a thermal softening temperature below about 225° C.

4,301,256

CRYSTALLINE OLEFIN BLOCK POLYMERS AND THEIR PREPARATION

James L. Jezl, Swarthmore, Pa., assignor to Standard Oil Company (Indiana), Chicago, Ill.

Division of Ser. No. 728,039, May 9, 1968, Pat. No. 3,873,642, which is a continuation-in-part of Ser. No. 424,819, Jan. 11, 1965, abandoned, which is a continuation-in-part of Ser. No. 90,173, Feb. 20, 1961, abandoned, and Ser. No. 816,714, May 29, 1959, abandoned, said Ser. No. 90,173, is a continuation-in-part of Ser. No. 816,714, , abandoned. This application Mar. 18, 1975, Ser. No. 559,481

Int. Cl.³ C08F *297/08*

U.S. Cl. 525—247 **5 Claims**

1. A method of producing an ethylene-modified polypropylene product containing as an essential component thereof molecules in which a portion of irregular ethylene-propylene copolymer is attached to one end of an isotactic polypropylene polymer chain, the total amount of ethylene units in said product being in the range from 1 to 20% by weight and the proportion of ethylene units in said ethylene-propylene copolmer being between 20 and 90% by weight, which comprises first homopolymerizing propylene by contact with a highly stereospecific Ziegler type olefin polymerization catalyst consisting of a reaction product of titanium trichloride and diethylaluminum chloride, until the concentration of solid polymer particles in the reaction slurry is at least about 80% of the desired final concentration, thereafter continuing polymerization in the presence of a mixture of propylene with ethylene wherein the concentration of propylene is in excess of ethylene, stopping the polymerization reaction when the amount of polymer has reached the desired final concentration, and recovering said ethylene-modified polypropylene product.

4,301,257

POLYFUNCTIONAL ISOCYANATES FREE OF ALKALI AND UREA GROUPS

Hans Zengel, Kleinwallstadt; Rainer Zielke, and Manfred Bergfeld, both of Erlenbach, all of Fed. Rep. of Germany, assignors to Akzona Incorporated, Asheville, N.C.

Continuation-in-part of Ser. No. 40,374, May 18, 1979, abandoned. This application Mar. 13, 1980, Ser. No. 129,878

Int. Cl.³ C08F *8/00, 8/22, 8/30, 18/72*

U.S. Cl. 525—329 **15 Claims**

1. A polyfunctional isocyanate which is an acrylamide or metharylamide homopolymer or interpolymer having 20 to 100% of its secondary α and tertiary α carbon atom amide groups converted to isocyanate groups, said polyfunctional isocyanate being free of alkali and urea groups.

5. A process for the preparation of polyfunctional isocyanates which comprises reacting an N-chloramide group containing derivative of an acrylamide or methacrylamide homopolymer or interpolymer with a tertiary amine having a pK_a value of more than 7, in the presence of an inert solvent, at a temperature of from about 20° C. to about 180° C.

4,301,258

CYCLIC ORGANO CARBONATE AND SULFITE COUPLING AGENTS FOR LIVING POLYMERS OF CONJUGATED DIENES

Joginder Lal, Akron, and Michael L. Senyek, Tallmadge, both of Ohio, assignors to The Goodyear Tire & Rubber Company, Akron, Ohio

Filed May 27, 1980, Ser. No. 153,121

Int. Cl.³ C08F *112/00, 132/00, 136/00*

U.S. Cl. 525—334 **9 Claims**

1. A process for the preparation of conjugated diene polymers of broadened molecular weight distribution and negligible cold flow comprising:
(a) polymerizing at least one conjugated diene in the presence of an initiator selected from organoalkali metal or organomagnesium initiators until the consumption of monomer is substantially complete,
(b) reacting the resulting polymer from said step (a) by ring-opening coupling with a compound of the general formula:

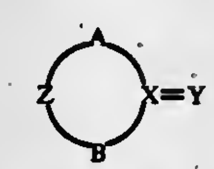

wherein, Z is a 1,2-phenylene, 1,2-cyclohexylene, or

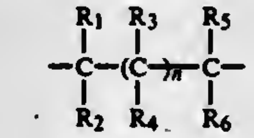

grouping wherein n=0 or 1 and R_1, R_2, R_3, R_4, R_5 and R_6 are the same or different and are selected from hydrogen or a hydrocarbyl group containing from 1 to 12 carbon atoms and A, B and Y are oxygen or sulfur and X is carbon or sulfur, with the stipulation that when X is sulfur, Y must be oxygen, in an amount of from 0.2 to 3 moles of the coupling compound per mole of said organoalkali metal or organomagnesium initiator.

4,301,259

LINEAR ORGANO CARBONATE COUPLING AGENTS FOR LIVING POLYMERS OF CONJUGATED DIENES

Joginder Lal, Akron, and Michael L. Senyek, Tallmadge, both of Ohio, assignors to The Goodyear Tire & Rubber Company, Akron, Ohio

Filed May 27, 1980, Ser. No. 153,122

Int. Cl.³ C08F *8/34, 36/04*

U.S. Cl. 525—334 **10 Claims**

1. A process for the preparation of conjugated diene polymers of broadened molecular weight distribution and negligible cold flow comprising:
(a) polymerizing at least one diene in the presence of an initiator selected from organoalkali metal or organomagnesium initiators until the consumption of monomer is substantially complete,
(b) reacting the resulting polymer from said step (a) with a coupling agent of the general formula

$$R_1-A-\overset{\overset{\displaystyle Y}{\|}}{X}-B-R_2 \quad \text{wherein,}$$

wherein,
R_1 and R_2 are the same or different and are selected from a hydrocarbyl group containing from 1 to 12 carbon atoms A, B and Y are oxygen or sulfur, X is carbon or sulfur, with the stipulation that when X is sulfur, Y must by oxygen, in an amount of from 0.2 to 3 moles of coupling agent per mole of said organoalkali metal or organomagnesium initiator.

4,301,260

VULCANIZABLE RUBBER COMPOSITIONS SCORCH INHIBITED BY 2-(THIOAMINO)-4,6-DIAMINO-1,3,5-TRIAZINES

Gene R. Wilder, Medina, Ohio, assignor to Monsanto Company, St. Louis, Mo.

Filed May 12, 1980, Ser. No. 148,061

Int. Cl.³ C08C *19/20, 19/22*

U.S. Cl. 525—348 **9 Claims**

1. A composition comprising sulfur-vulcanizable diene rubber, sulfur-vulcanizing agent, organic vulcanization accelerating agent, and, in an amount effective to inhibit premature vulcanization, a compound of the formula

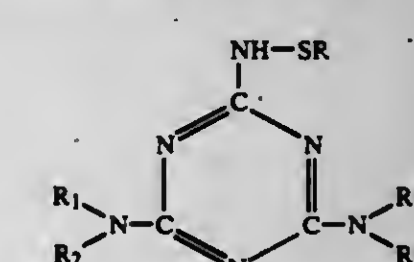

in which R, R_1 and R_2 independently are C_1–C_{12} alkyl, C_5–C_{12} cycloalkyl, C_7–C_{10} aralkyl, phenyl, or mono- or di-substituted phenyl wherein the substituents are C_1–C_6 alkyl, C_1–C_6 alkoxy, or C_1–C_6 alkylthio, or R_1 is hydrogen.

4,301,261

PROCESS FOR STABILIZING POLYESTER COMPOSITIONS

Roy J. Jackson, Houston, Tex., assignor to Shell Oil Company, Houston, Tex.

Filed Jun. 27, 1980, Ser. No. 163,465

Int. Cl.³ C08G *59/16*

U.S. Cl. 525—507 **13 Claims**

1. A process for reducing the premature gelation of unsaturated polyesters prepared by esterifying an epoxy compound containing tertiary, allylic or benzylic hydrogens with an ethylenically unsaturated monocarboxylic acid which com-

prises pre-reacting the epoxy compound with a trialkylphosphite prior to the esterification step.

4,301,262

PROCESS FOR THE PRODUCTION OF AMINOPLAST DISPERSIONS

Kuno Wagner, Leverkusen; Jürgen Ick, and Gerhard Balle, both of Cologne, all of Fed. Rep. of Germany, assignors to Bayer Aktiengesellschaft, Leverkusen, Fed. Rep. of Germany

Division of Ser. No. 664,324, Mar. 5, 1976, Pat. No. 4,246,160. This application Jun. 25, 1980, Ser. No. 162,843

Claims priority, application Fed. Rep. of Germany, Mar. 21, 1975, 2512385

Int. Cl.^{3} C08F *283/00*

U.S. Cl. 525—509 **1 Claim**

1. A process for the production of polyurethane, comprising reacting an isocyanate with a dispersion of aminoplast condensates in an organic polyhydroxyl compound prepared by the oligo-condensation or polycondensation of substances capable of aminoplast formation, in said organic polyhydroxyl compounds, wherein said dispersions are reacted at from about $-5°$ C. to about 180° C. with an amine compound selected from the group consisting of:

(a) aliphatic or cycloaliphatic mono- or polyamine containing at least one primary or secondary amine group, and which are gaseous or liquid at room temperature, and

(b) alkyl hydrazines containing at least one primary or secondary amine group and which are gaseous or liquid at room temperature.

4,301,263

PRE-COPOLYMER COMPRISING DIALLYL PHTHALATE AND TRIALLYL ISOCYANURATE

Akinori Kameyama; Hiroyasu Saito, and Jibei Inomata, all of Iwaki, Japan, assignors to Nippon Kasei Chemical Co., Ltd., Fukushima, Japan

Filed Nov. 8, 1979, Ser. No. 92,588

Claims priority, application Japan, Nov. 18, 1978, 53-142702

Int. Cl.^{3} C08F *218/18*

U.S. Cl. 526—68 **6 Claims**

1. A pre-copolymer comprising either diallyl orthophthalate units or diallyl isophthalate units and triallyl isocyanurate units, and having a melting point of 50° to 200° C. and a number average molecular weight of 5,000 to 15,000, the molar ratio of diallyl orthophthalate units to triallyl isocyanurate units in said pre-copolymer being in the range of from 95:5 to 40:60, or the molar ratio of diallyl isophthalate units to triallyl isocyanurate unites in said pre-copolymer being in the range of from 95:5 to 30:70.

4,301,264

EMULSION POLYMERIZATION PROCESS

John D. Moore, Hythe, and Alan A. J. Feast, Chandlers Ford, both of England, assignors to I.S.R. Holding, S.a.r.l., Luxembourg, Luxembourg

Continuation of Ser. No. 971,094, Dec. 19, 1978, abandoned. This application May 14, 1980, Ser. No. 149,940

Claims priority, application United Kingdom, Mar. 3, 1978, 8546/78

Int. Cl.^{3} C08F *2/22*

U.S. Cl. 526—86 **12 Claims**

1. A process for reducing the residual styrene monomer level of a polymer latex prepared by the emulsion polymerisation of styrene monomer alone, or of a monomeric mixture containing styrene monomer which polymerisation has been taken to a conversion of at least 90%, which comprises exposing the latex, in a separate vessel from that in which the main polymerisation has been carried out to conditions under which free radicals are produced by a secondary redox catalyst, said catalyst having two components, one of which is oil soluble, and at least one component of which is water soluble and is added to the latex, the only monomers in said separate vessel being those left over from said conversion and wherein the residual styrene is reduced to a level not exceeding 0.1% based on the latex volume.

4,301,265

TRANSITION METAL COMPOSITION AND PROCESS

Ashley D. Bye, The Hague, Netherlands, assignor to Imperial Chemical Industries Limited, London, England

Division of Ser. No. 936,897, Aug. 25, 1978, Pat. No. 4,213,878. This application Jan. 4, 1980, Ser. No. 109,514

Claims priority, application United Kingdom, Aug. 31, 1977, 36342/77

Int. Cl.^{3} C08F *4/66, 10/06*

U.S. Cl. 526—140 **12 Claims**

1. A process for the production of a polymer or copolymer of an olefine monomer wherein at least one olefine monomer, or a mixture of at least one olefine monomer and ethylene, is polymerised by contacting the at least one olefine, or mixture thereof with ethylene, under polymerisation conditions with an olefine polymerisation catalyst comprising

(1) a titanium trichloride-containing material; and

(2) at least one organo-metallic compound of aluminium, or of a non-transition metal of Group IIA of the Periodic Table, or a complex of an organo-metallic compound of a non-transition metal of Group IA or Group IIA of the Periodic Table with an organo-aluminium compound,

wherein the titanium trichloride-containing material which is component (1) of the catalyst is the product obtained by

(1) reducing titanium tetrachloride by reacting the titanium tetrachloride with a reducing agent under conditions to give a solid titanium trichloride product which includes an associated aluminium compound containing aluminium and chlorine atoms, wherein the titanium trichloride is formed predominantly in the beta-form;

(2) contacting a suspension of the solid reduction product of step (1) with both compound E and compound L, compound L being added after the addition of compound E so that both compound E and compound L are present together, at least part of the contacting being effected while maintaining the suspension at a temperature of at least 60° C. in the presence of at least compound E; and

(3) washing the solid product obtained with an inert hydrocarbon or inert halohydrocarbon liquid;

wherein

E is an ether or a thioether;

L is an organic sulphur-containing compound of one of the formulae (1), (2) or (3);

formula (1) is

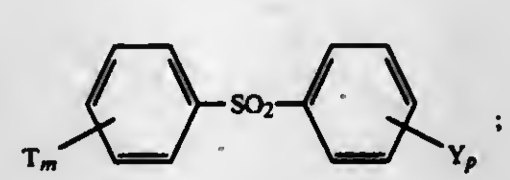

formula (2) is

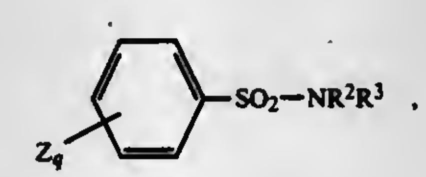

and formula (3) is

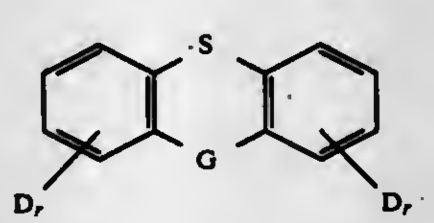

where

T, or each T is, independently, a halogen atom, an alkyl, aryl, alkoxy, aryloxy, alkylthio, or arylthio group, or a group $-NR^1R^2$, or two groups T can together form a saturated or unsaturated hydrocarbon ring;

Y, or each Y is, independently, a halogen atom, an alkyl, aryl, alkoxy, aryloxy, alkylthio, or arylthio group, or a group $-NR^1R^2$, or two groups Y can together form a saturated or unsaturated hydrocarbon ring; or a group T and a group Y may be replaced by a link between the two phenyl groups attached to the $-SO_2-$ group, the linkage being either direct or through a group —O—, $-CH_2-$, $-NR^1-$, —S— or —CO—;

Z, or each Z is, independently, a halogen atom, an alkyl, aryl, alkoxy, aryloxy, alkylthio, or arylthio group, or a group $-NR^1R^2$, or two groups Z can together form a saturated or unsaturated hydrocarbon ring;

D, or each D is, independently, a halogen atom, an alkyl, aryl, alkoxy, aryloxy, alkylthio, or arylthio group, or a group $-NR^1R^2$;

G is —S—, —O—, $-NR^2-$ or —CO—;

R^1 is a hydrogen atom or a hydrocarbyl group;

R^2 is a hydrocarbyl group;

R^3 is a hydrocarbyl group or can be a group

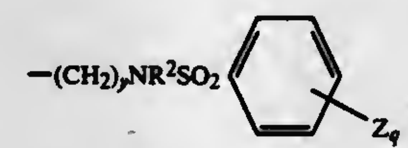

m, p, q and r are each, independently, an integer from 0 up to 5; and

y is a positive integer.

4,301,266

MANUFACTURE OF POLYMERS OF ACRYLIC ACID OR METHACRYLIC ACID

Alfred Muenster, Ludwigshafen, and Michael Rohmann, Bad Durkheim, both of Fed. Rep. of Germany, assignors to BASF Aktiengesellschaft, Fed. Rep. of Germany

Filed Dec. 1, 1978, Ser. No. 965,264

Claims priority, application Fed. Rep. of Germany, Dec. 22, 1977, 2757329

Int. Cl.^{3} C08F *2/06, 2/10, 2/38, 20/06*

U.S. Cl. 526—212 **5 Claims**

1. In the process for the production of low molecular weight water soluble polymers of acrylic or methacrylic acid by polymerizing acrylic acid or methacrylic acid with up to 10% by weight of a comonomer selected from the group consisting of esters of acrylic acid or of methacrylic acid, fumaric acid, maleic acid, monoesters or diesters of fumaric acid, monoesters or diesters of maleic acid, acrylonitrile, methacrylonitrile, acrylamide and methacrylamide, in a solvent selected from the group consisting of isopropanol and mixtures of isopropanol and water containing at least 40% by weight of isopropanol, in the presence of polymerization initiators, the improvement comprising carrying out the polymerization at a temperature of from 120° to 200° C. under a pressure of at least about 2 bars.

4,301,267

ULTRAVIOLET LIGHT STABLE COPOLYMER COMPOSITIONS COMPRISING MONOMERS WHICH ARE α,β-UNSATURATED DICARBOXYLIC ACID HALF-ESTERS OF 2-HYDROXY, ALKOXY, METHYLOLBENZOPHENONES AND STYRENE-BUTADIENE COMONOMERS

Eugene S. Barabas, Watchung; Prakash Mallya, Bloomingdale, and Stanley J. Gromelski, Jr., West Caldwell, all of N.J., assignors to GAF Corporation, New York, N.Y.

Filed Aug. 26, 1980, Ser. No. 181,336

Int. Cl.^{3} C08F *20/20*

U.S. Cl. 526—313 **10 Claims**

1. An ultraviolet light stable copolymer composition comprising:

(a) a monomer which is an α,β-unsaturated dicarboxylic acid half-ester of a 2-hydroxy, alkoxy, methylolbenzophenone, having the formula:

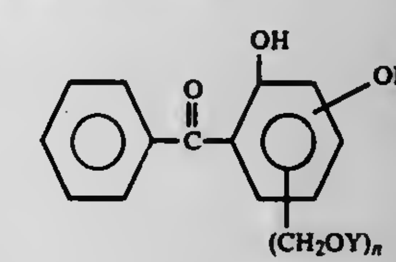

where

R is alkyl C_1–C_8,

n is 1 or 2, and

Y is a half-acyl radical derived from maleic or itaconic anhydrides, and,

(b) a comonomer selected from styrene and styrene-butadiene.

4,301,268

PROCESS FOR THE PREPARATION OF ORGANOPOLYSILOXANES MODIFIED WITH METHACRYLIC ESTERS

Vaclav Kropac, Essen, Fed. Rep. of Germany, assignor to TH. Goldschmidt AG, Essen, Fed. Rep. of Germany

Filed Jan. 11, 1978, Ser. No. 868,545

Claims priority, application United Kingdom, Jan. 12, 1977, 1227/77

Int. Cl.^{3} C08G *77/14;* **C08L** *83/06*

U.S. Cl. 528—26 **12 Claims**

1. In a process for the preparation of organopolysiloxanes which are modified with methacrylic esters wherein —COH-group containing methacrylic esters are reacted with organopolysiloxanes which contain —SiX groups wherein X is alkoxyl, hydroxyl or chloro, the improvement which comprises said organopolysiloxanes being reacted with from 0.05 to equimolar amounts, based on —COH and —SiX groups, of pentaerythritol trimethacrylate, the organpolysiloxanes having the formula

$$R_a^1-\underset{\underset{O_{\frac{4-(a+b)}{2}}}{|}}{Si}-X_b$$

in which

R^1 is an alkyl group with 1 to 4 carbon atoms or an aryl group;

X is a chloro group or methoxy;

a has a value from 1.0 to 2.0;

b has a value from 0.02 to 1.6;

$a+b\leq 2.66$; and

the siloxane molecule has from 3 to 100 Si atoms.

4,301,269

ROOM TEMPERATURE CURING POLYSILOXANE COMPOSITIONS

Mitsuyoshi Hashimoto, Ojimamchi; Kiyoshi Hosokawa, Ota, and Tsuneo Motegi, Ouramachi, all of Japan, assignors to Toshiba Silicone Co., Ltd., Tokyo, Japan

Filed Jan. 7, 1980, Ser. No. 110,060

Claims priority, application Japan, Jan. 12, 1979, 54-2517

Int. Cl.³ C08G *77/04*

U.S. Cl. 528—34 **21 Claims**

1. A room-temperature-curable polysiloxane composition consisting essentially of:

(A) polydiorganosiloxane having silanol terminal radicals, said polydiorganosiloxane having a viscosity of 500 to 200,000 cSt at 25° C.,

(B) from zero to 24.625 parts by weight, per 100 parts by weight of component (A), of acyloxy radical-containing organosilicon component selected from the group consisting of first compounds having the formula:

$$R^1Si(\overset{O}{\overset{\|}{C}}R^2)_3 \quad \text{i.e. } R^1Si(OCR^2)_3 \text{ with } C{=}O$$

wherein R^1 and R^2, which can be the same or different, each is a monovalent, substituted or unsubstituted hydrocarbon radical,

partial hydrolyzates of said first compounds and mixtures thereof, and

(C) from 0.0075 to 25 parts by weight, per 100 parts by weight of component (A), of organosilane component selected from the group consisting of second compounds having the formula:

$$R_a^3Si[(OQ)_nR^4]_b(O\overset{O}{\overset{\|}{C}}R^5)_{4-a-b}$$

wherein R^3 is a monovalent, substituted or unsubstituted hydrocarbon radical, n is 1 or 2, Q is alkylene or alkylidene and when n is 2, Q can be the same or different, R^4 is an ester bond-containing radical having the formula:

$$-O\overset{O}{\overset{\|}{C}}R^6 \text{ or } -\overset{O}{\overset{\|}{C}}OR^7,$$

wherein R^6 and R^7 are monovalent, substituted or unsubstituted hydrocarbon radicals, R^5 is a monovalent radical selected from the group consisting of hydrogen and monovalent, substituted or unsubstituted hydrocarbon radicals, a is 0 or 1 and b is an integer of 1, 2, 3 or 4, partial hydrolyzates of said second compounds and mixtures thereof, the sum of components (B) and (C) being 0.5 to 25 parts by weight per 100 parts by weight of component (A), the amount of component (B) being from zero to 98.5 wt. % based on the sum of components (B) and (C), and the amount of component (C) being at least 1.5 wt. % based on the sum of components (B) and (C).

4,301,270

CURATIVE FOR CASTABLE POLYURETHANES

Eugene Y. C. Chang, Bridgewater, N.J., assignor to American Cyanamid Company, Stamford, Conn.

Filed Dec. 5, 1980, Ser. No. 213,534

Int. Cl.³ C08G *18/32*

U.S. Cl. 528—64 **6 Claims**

1. A castable polyurethane curative system consisting essentially of (A) from about 65% to about 99%, by weight, of B-di(hydroxyethoxy)benzene and (B) from about 1% to about 35%, by weight, based on the total weight of the system, of 1,2-bis(2-aminophenylthio)ethane.

4,301,271

POLYURETHANE-BASED BINDER, AS WELL AS THE PRODUCTION THEREOF

Marek Torbus, Düsseldorf, and Aleksandar Vujevic, Ratingen, both of Fed. Rep. of Germany, assignors to Hüttenes-Albertus Chemische Werke GmbH, Düsseldorf, Fed. Rep. of Germany

Filed Jan. 16, 1980, Ser. No. 159,769

Claims priority, application Fed. Rep. of Germany, Jan. 23, 1979, 2925733

Int. Cl.³ C08G *18/32*

U.S. Cl. 528—85 **5 Claims**

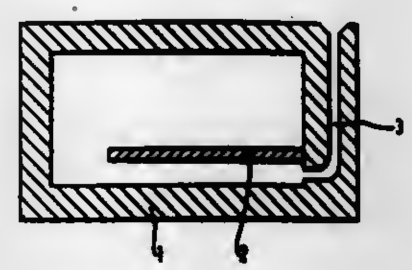

1. Cold-setting moulding material binder with a polyurethane base for moulding material mixtures for producing moulds and cores, comprising a polyisocyanate with at least two NCO groups in the molecule and an amino polyol containing at least two OH groups, as well as a tertiary amino group acting as the accelerator in the molecule, characterized in that the amino polyol contains phenolic OH groups.

4,301,272

ADDITION POLYMERS OF DIMORPHOLONE COMPOUNDS AND DIAMINES

Hans-Juergen Degen, Lorsch, and Herbert Naarmann, Wattenheim, both of Fed. Rep. of Germany, assignors to BASF Aktiengesellschaft, Fed. Rep. of Germany

Filed Mar. 3, 1980, Ser. No. 126,289

Claims priority, application Fed. Rep. of Germany, Mar. 22, 1979, 2911263

Int. Cl.³ C08G *69/00*

U.S. Cl. 528—183 **2 Claims**

1. A polymer with a K value using a 1% strength of weight solution in dimethylformamide at 25° C. of from 20 to 65, which contains structural units of the general formula (I)

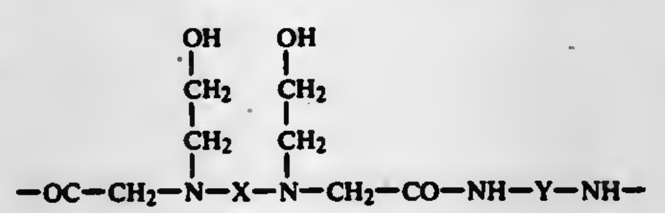

I

where X and Y are identical or different and are $—(CH_2—CH_2)_n—$, where n is from 1 to 6, or are

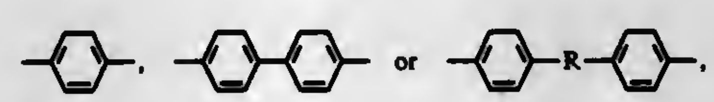

where R is O, S, SO_2, $C(CH_3)_2$ or CH_2, or are

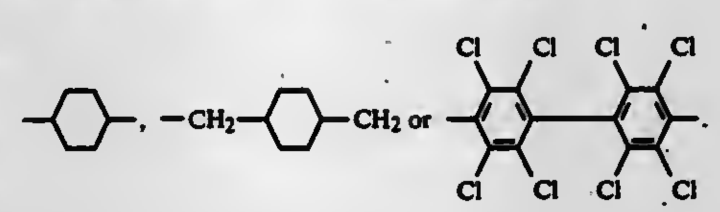

4,301,273

PROCESS FOR STABILIZING OXYMETHYLENE COPOLYMERS

Akitoshi Sugio, Ohmiya; Akira Amemiya, Tokyo; Tadashi Kunii, Yokkaichi; Tomotaka Furusawa; Mutsuhiko Takeda, both of Matsudo; Katsumasa Tanaka, Yokkaichi, and Toshikazu Umemura, Tokyo, all of Japan, assignors to Mitsubishi Gas Chemical Company, Inc., Tokyo, Japan

Filed May 27, 1980, Ser. No. 153,674

Claims priority, application Japan, May 28, 1979, 54-65750

Int. Cl.³ C08G *2/28*

U.S. Cl. 528—230 **5 Claims**

1. In a process for producing a stabilized oxymethylene copolymer which comprises heat-melting an oxymethylene copolymer having unstable, unblocked terminals obtained by the copolymerization of trioxane with a cyclic acetal and/or a cyclic ether to heat decompose it in the presence of available heat stabilizers; the improvement which comprises heating said oxymethylene copolymer having an unblocked terminals in a mixer at a temperature between the melting point of said oxymethylene copolymer and a point 100° C. higher than said melting point under a pressure of 0.1 mmHg to atmospheric pressure for a mean residence time of 5 to 60 minutes, said mixer comprising a casing, a jacket for a heating medium fitted over its external wall, and at least two stirring shafts equipped with a plurality of scraping blades disposed in said casing, said stirring shafts being capable of rotating in the same or different directions, wherein (a) the scraping blades of one stirring shaft and those of another stirring shaft are deviated from each other in the direction of the stirring shafts so as to avoid collision and the tips of the scraping blades of one stirring shaft are capable of rotating while keeping a slight clearance from the inside surface of the casing and the surface of the other stirring shaft, or (b) the scraping blades of one stirring shaft and those of another stirring shaft are located in matched positions in the direction of the stirring shafts and the tips of the scraping blades of one stirring shaft can rotate while keeping a slight clearance from the inside surface of the casing and the stirring blades of the other stirring shaft; and in the meantime, rotating said stirring shafts of said mixer to heat decompose said oxymethylene copolymer while renewing the surface of the molten oxymethylene copolymer.

4,301,274

AROMATIC SULFIDE/SULFONE POLYMER PRODUCTION

Robert W. Campbell, Bartlesville, Okla., assignor to Phillips Petroleum Company, Bartlesville, Okla.

Filed Jan. 29, 1980, Ser. No. 116,434

Int. Cl.³ C08G *75/16, 75/20*

U.S. Cl. 528—388 **15 Claims**

1. In a process for the production of an aromatic sulfide/sulfone polymer comprising contacting a dihaloaromatic sulfone, an alkali metal sulfide, and an organic amide under polymerization conditions sufficient to cause the reactants to react and form said polymer, the improvement for increasing melt flow stability of the polymer produced by said contacting which comprises end-capping the polymer by introducing a small, but effective, amount sufficient to impart increased melt flow stability of additional dihaloaromatic sulfone into the crude reaction mixture at or near completion of the polymerization reaction.

4,301,275

PROCESS AND DEVICE FOR CONTINUOUSLY TREATING WITH GASES AQUEOUS DISPERSIONS OF POLYVINYL CHLORIDE

Christoph Heinze, Burghausen; Franz Bötsch, Burgkirchen-Holzen, and Horst Wolff, Neuötting, all of Fed. Rep. of Germany, assignors to Hoechst Aktiengesellschaft, Fed. Rep. of Germany

Continuation of Ser. No. 902,866, May 4, 1978, abandoned, which is a continuation of Ser. No. 683,471, May 4, 1976, abandoned. This application May 19, 1980, Ser. No. 151,404

Claims priority, application Fed. Rep. of Germany, May 9, 1975, 2520591

Int. Cl.³ C08F *6/24, 6/16*

U.S. Cl. 528—500 **8 Claims**

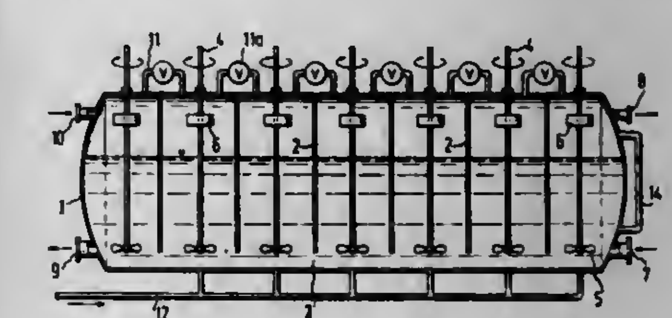

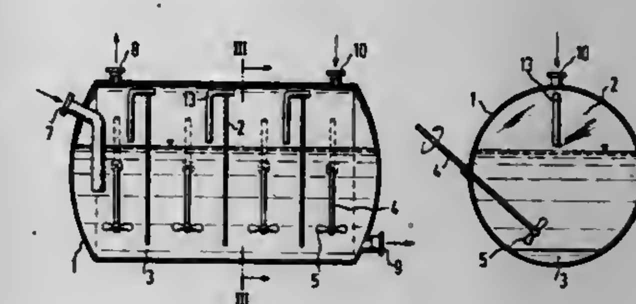

1. A process for continuously removing vinyl chloride monomer from an aqueous polymer dispersion whose polymer portion contains at least 50% by weight of polymerized vinyl chloride so as to obtain a residual vinyl chloride monomer content of 10 ppm or less, said process comprising the steps of passing the dispersion in one direction through the lower regions of at least two serially arranged chambers, passing a gas which does not react with the dispersion through the upper regions of said serially arranged chambers in a direction opposite to the passage of polymer dispersion so as to contact the upper surface of the dispersion in each chamber with said gas without passing said gas through said dispersion, and maintaining the upper surface of the dispersion in said chambers in motion in the direction of the boundry surface between the dispersion and the gas, said motion being radial relative to a point on the surface of said dispersion and having a speed of 0.3 to 10 m/sec.

4,301,276

SYNTHESIS OF DAUNOSAMINE HYDROCHLORIDE AND INTERMEDIATES USED IN ITS PREPARATION

Roy L. Whistler, West Lafayette, Ind., assignor to Purdue University, West Lafayette, Ind.

Filed Mar. 7, 1980, Ser. No. 128,299

Int. Cl.³ C07H *15/04*

U.S. Cl. 536—4 **20 Claims**

16. A compound having the formula

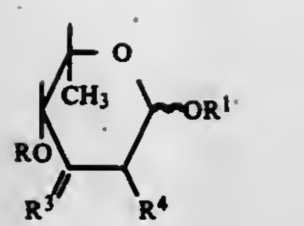

wherein

R^1 is C_1–C_6 alkyl

R is

$$CH_3\overset{O}{\overset{\|}{C}}- \text{ or } C_6H_5\overset{O}{\overset{\|}{C}}-$$

R^3 is O=, HON=,

$$CH_3\overset{O}{\overset{\|}{C}}-ON= \text{ or } C_6H_5\overset{O}{\overset{\|}{C}}-ON=$$

R^4 is HgCl or H

provided that when R^4 is HgCl, R^3 must be O= or HON=; when R^4 is H, R^3 cannot be O=.

4,301,277

3-DEAMINO-3-(4-MORPHOLINYL) DERIVATIVES OF DAUNORUBICIN AND DOXORUBICIN

Edward M. Acton, Menlo Park, and Carol W. Mosher, Stanford, both of Calif., assignors to SRI International, Menlo Park, Calif.

Filed Oct. 20, 1980, Ser. No. 199,082

Int. Cl.^{3} C07H *15/24*

U.S. Cl. 536—17 A **7 Claims**

1. Compounds of the formula

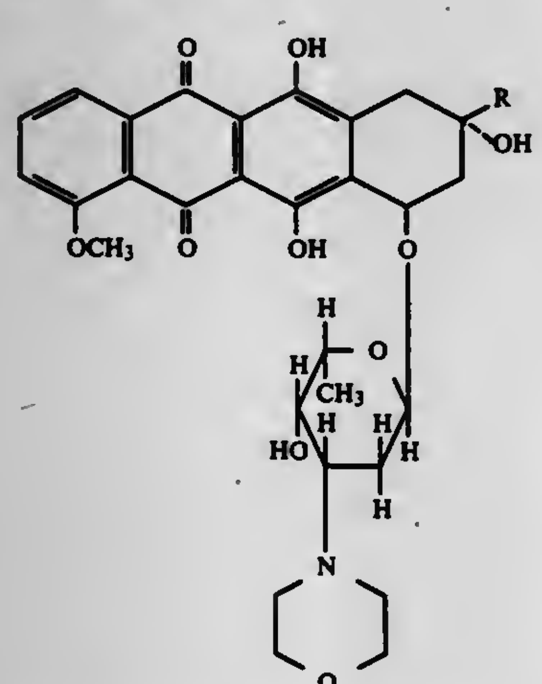

wherein R is selected from the group consisting of $—COCH_3$, $—CHOHCH_3$, $—COCH_2OH$ and $—CHOHCH_2OH$ and the pharmaceutically acceptable acid addition salts of said compounds.

4,301,278

PROCESS FOR THE MANUFACTURE OF ENOL DERIVATIVES

Robert B. Woodward, Cambridge, Mass., and Hans Bickel, Binningen, Switzerland, assignors to Ciba-Geigy Corporation, Ardsley, N.Y.

Division of Ser. No. 962,425, Nov. 20, 1978, Pat. No. 4,255,328, which is a division of Ser. No. 746,927, Dec. 2, 1976, Pat. No. 4,147,864, which is a continuation of Ser. No. 551,483, Feb. 20, 1975, abandoned. This application Mar. 26, 1979, Ser. No. 23,971

Int. Cl.^{3} C07D *501/20*

U.S. Cl. 544—016 **10 Claims**

1. Process for the manufacture of a 7β-amino-3-cephem-3-ol-4-carboxylic acid compound of the formula

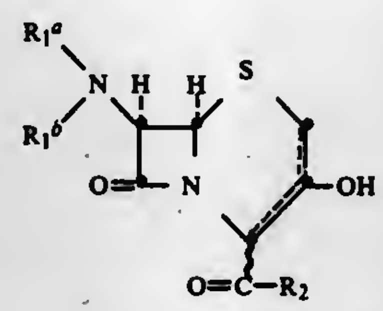

(IA)

wherein R_1^a represents an acyl group of the formula

$$R^I-\overset{O}{\overset{\|}{C}}-, \qquad (A_1)$$

wherein R^I represents hydrogen or cycloalkyl with 5–7 ring carbon atoms which is substituted in the 1-position, by amino, protected amino, sulphoamino or sulphoamino in the form of a salt, or R^I represents phenyl, naphthyl or tetrahydronaphthyl, or phenyl, naphthyl or tetrahydronaphthyl substituted by hydroxyl, protected hydroxyl, and/or by halogen, a 4-isoxazolyl group or a 4-isoxazolyl group substituted by lower alkyl, and/or phenyl, which can in turn carry halogen, or R^I represents an amino group which is N-substituted by lower alkyl or halogen-substituted lower alkyl, or R_1 represents an acyl group of the formula

$$R^I-CH_2-\overset{O}{\overset{\|}{C}}- \qquad (A_2)$$

wherein R^I represents lower alkyl, halogeno-lower alkyl, phenyloxy-lower alkyl, hydroxyphenyloxy-lower alkyl, protected hydroxyphenyloxy-lower alkyl, halogeno-phenyloxy-lower alkyl, or lower alkyl substituted by amino and/or carboxyl, wherein amino is free or protected and carboxyl is free or protected, or R^I represents lower alkenyl, phenyl, hydroxyphenyl, protected hydroxyphenyl, halogenophenyl, hydroxy-halogeno-phenyl, protected hydroxy-halogenophenyl, amino-lower alkyl-phenyl, protected amino-lower alkyl-phenyl, phenyloxyphenyl, or R^I represents pyridyl, pyridinium, thienyl, furyl, imidazolyl or tetrazolyl, or these heterocyclic groups substituted by lower alkyl, amino, protected amino, aminomethyl or protected aminomethyl, or R^I represents lower alkoxy, phenyloxy, hydroxyphenyloxy, protected hydroxyphenyloxy, halogenophenyloxy, lower alkylthio, lower alkenylthio, phenylthio, pyridylthio, 2-imidazolylthio, 1,2,4-triazol-3-ylthio, 1,3,4-triazol-2-ylthio, 1,2,4-thiadiazol-3-ylthio, 1,3,4-thiadiazol-2-ylthio, or 5-tetrazolythio, and these heterocyclylthio groups, substituted by lower alkyl, or R^I represents halogeno, lower alkoxycarbonyl, cyano, carbamoyl, N-lower alkyl-carbamoyl, N-phenylcarbamoyl, lower alkanoyl, benzoyl, or azido, or R_1^a represents an acyl group of the formula

$$R^I-\overset{R^{II}}{\overset{|}{C}H}-\overset{O}{\overset{\|}{C}}-, \qquad (A_3)$$

wherein R^I represents lower alkyl, phenyl, hydroxyphenyl, protected hydroxyphenyl, halogenophenyl, hydroxy-halogenophenyl, protected hydroxy-halogeno-phenyl, furyl, thienyl, or isothiazolyl, and also represents 1,4-cyclohexadienyl, and R^{II} represents amino, protected amino, guanidinocarbonylamino, sulphoamino, sulphoamino in salt-form, azido, carboxyl, carboxyl in salt-form, protected carboxyl, cyano, sulpho, hydroxyl, protected hydroxyl, O-lower alkyl-phosphono, O,O'-di-lower alkyl-phosphono or halogeno or R_1^a represents a group of the formula

$$R^I-\overset{R^{II}}{\overset{|}{C}H}-\overset{O}{\overset{\|}{C}}-, \qquad (A_4)$$

wherein R^I and R^{II} each represent halogen, or lower alkoxycarbonyl, or R_1^a represents a group of the formula

$$R^I-\overset{R^{II}}{\overset{|}{C}H}-\overset{O}{\overset{\|}{C}}-, \qquad (A_5)$$

wherein R^I represents phenyl, hydroxyphenyl, protected hydroxyphenyl, hydroxy-halogeno-phenyl, protected hydrohalogenophenyl, furyl, thienyl, isothiazolyl, or 1,4-cyclohexadienyl, and R^{II} represents aminomethyl or protected aminomethyl or R_1^a represents a group of the formula

$$R^I-\underset{R^{III}}{\overset{R^{II}}{C}}-\overset{O}{\overset{\|}{C}}-, \qquad (A_6)$$

wherein each of the groups R^I, R^{II} and R^{III} represents lower alkyl, and R_1^b represents hydrogen, or R_1^a and R_1^b together represents 1-oxo-3-aza-1,4-butylen, such group substituted in the 2-position by a group R^I as defined under formula (A_3) and such group substituted in the 4-position by lower alkyl, R_2 represents a group R_2^A which together with the carbonyl grouping —C(=O)— forms a protected carboxyl group, a 1-oxide thereof or a metal or an ammonium salt of such a compound having a sulpho or a carboxy group or an acid addition salt of such a compound having a basic amino group, characterised in that in a compound of the formula

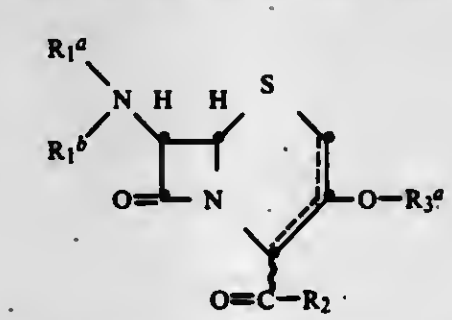

(I)

wherein the dotted line indicates a double bond in the 2,3- or in the 3,4-position, R_1^a, R_1^b and R_2 have the above mentioned meanings, and R_3^a is a 2-oxa-aliphatic, 2-oxa-cycloaliphatic, 2-thialiphatic, or 2-thia-cycloaliphatic hydrocarbon radical, a silyl or stannyl group substituted by lower alkyl, halogeno lower alkyl, cycloalkyl, phenyl, phenyl-lower alkyl, lower alkoxy or halogen, or an alpha-phenyl-lower alkyl group having one or two phenyl groups, wherein phenyl may be substituted by halogen or lower alkoxy, or in a 1-oxide thereof or a metal or an ammonium salt of such a compound having a sulpho or a carboxy group or an acid addition salt of such a compound having a basic amino group, the group R_3^a is split off and replaced by hydrogen by treatment with hydrogen in the presence of a catalyst, with water, an alcohol, or an organic or inorganic acid.

4,301,279

PROCESS FOR THE PRODUCTION OF 3-HYDROXY COMPOUNDS

Riccardo Scartazzini, Basel, Switzerland, assignor to Ciba-Geigy Corporation, Ardsley, N.Y.

Filed Feb. 13, 1980, Ser. No. 121,085

Claims priority, application Switzerland, Feb. 23, 1979, 1844/79

Int. Cl.^{3} C07D *501/20*

U.S. Cl. 544—016 **13 Claims**

1. Process for the production of 7β-substituted 3-hydroxy-cepham-4-carboxyic acid compounds of the formula

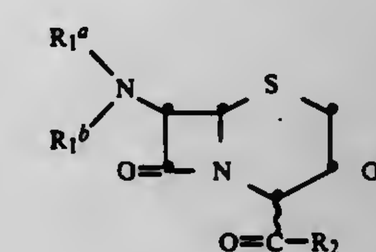

(I)

in which

R_1^a represents hydrogen or an amino-protecting group R_1^A, and

R_1^b represents hydrogen or an acyl radical Ac having up to 18 carbon atoms or in which

R_1^a and R_1^b together from a bivalent acyl radical of an organic dicarboxylic acid having up to 18 carbon atoms, and

R_2 represents a radical that, together with the carbonyl grouping —C(=O)—, forms a protected carboxyl group,

and 1-oxides thereof as well as salts of such compounds with salt-forming groups, from a 7β-substituted 3-hydroxy-3-cephem-4-carboxylic acid compound of the formula

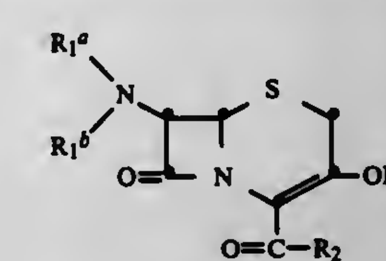

(II)

from a 1-oxide or a salt thereof, and a complex borohydride selected from the group consisting of an alkali metal borohydride, zinc borohydride, or such borohydride wherein from one to three hydrogen atoms are replaced by cyano, alkanoyloxy, halogenated alkanoyloxy, benzoyloxy, or lower alkoxy, characterized in that the reduction is carried out in the presence of an organic acid selected from the group consisting of an aliphatic, cycloaliphatic or aromatic carboxylic acid having up to 18 carbon atoms, which may be substituted by halogen, lower alkoxy, phenyl, or nitro.

4,301,280

PREPARATION OF 3-SUBSTITUTED CEPHALOSPORINS

John R. Corfield, Runcorn; Derek Johnson, and Clifford G. Taylor, both of Warrington, all of England, assignors to Lilly Industries Limited, London, England

Filed May 1, 1980, Ser. No. 145,531

Claims priority, application United Kingdom, May 8, 1979, 15929/79

Int. Cl.^{3} C07D *501/20, 277/60*

U.S. Cl. 544—016 **8 Claims**

1. A process for preparing an enamine of formula (IX):

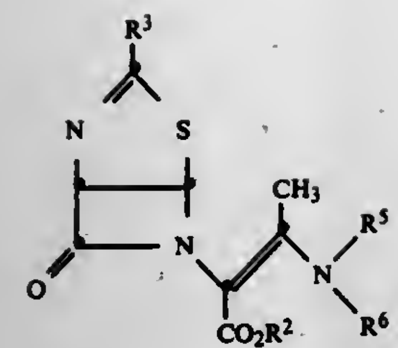

(IX)

where R^2 is a carboxylic acid protecting group and R^3 is the residue of a carboxylic acid derived acyl group and where R^5 and R^6 are the same or different C_{1-4} alkyl or C_{7-10} aralkyl groups; or taken together with the ajacent nitrogen atom form a heterocyclic ring containing from 4 to 8 carbon atoms and optionally a further heteroatom selected from oxygen and nitrogen; by reacting an enol of formula (XI):

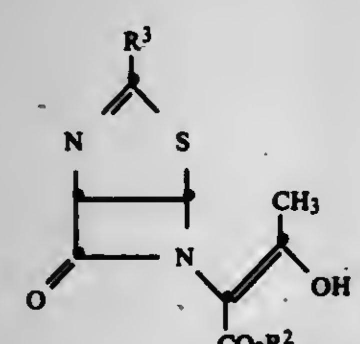

(XI)

with a phosphorus reagent of formula (VII):

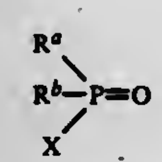

(VII)

where R^a and R^b are the same or different and can each represent phenyl or phenoxy optionally substituted by one to three groups selected from C_{1-4} alkyl, C_{1-4} alkoxy, halogen and nitro; or is C_{1-4} alkyl, C_{1-4} alkoxy, C_{3-8} cycloalkyl, C_{3-8} cycloalkoxy, chlorine or bromine;

X is chlorine, bromine, nitrile or azide; provided that:

(i) R^a and R^b cannot both be halogen; and

(ii) when X is nitrile or azide, R^a and R^b are the same or different phenoxy; C_{3-8} cycloalkoxy or C_{1-4} alkoxy groups, to form a product of formula (XII):

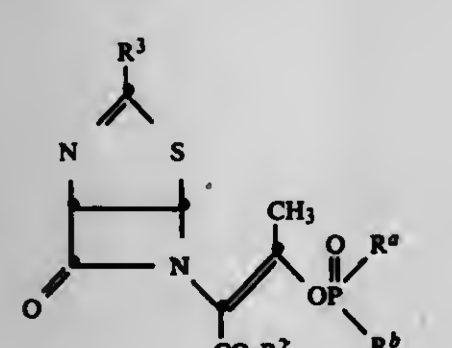

(XII)

followed by reaction of this product with an amine of formula HNR^5R^6 to form the enamine of formula (IX).

4,301,281

7,8-DIHYDRO-2,5,8-TRISUBSTITUTED-7-OXO-PYRIDO[2,3-D]-PYRIMIDINE-6-CARBOXYLIC ACID AMIDES

Anthony C. Scotese, King of Prussia; Robert L. Morris, Devon, and Arthur A. Santilli, Havertown, all of Pa., assignors to American Home Products Corporation, New York, N.Y.

Continuation-in-part of Ser. No. 31,256, Apr. 18, 1979, Pat. No. 4,215,216. This application Feb. 28, 1980, Ser. No. 125,620

Int. Cl.^{3} C07D *487/04*

U.S. Cl. 544—80 **4 Claims**

1. A compound of the formula:

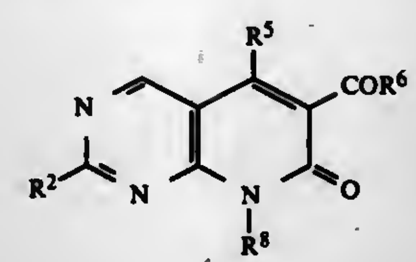

in which

R^2 is hydrogen, hydroxy, alkyl of 1 to 6 carbon atoms, alkylthio of 1 to 6 carbon atoms, phenyl, 4-methoxyphenyl, 4-chlorophenyl, 1-pyrrolidinyl or methylphenylamino;

R^5 is hydroxy, alkylamino of 1 to 6 carbon atoms, 2-hydroxyethylamino, 2-alkoxyethylamino of 3 to 8 carbon atoms, dialkylamino wherein each alkyl group contains from 1 to 6 carbon atoms, 4-methyl-1-piperazinyl, 4-morpholinyl or 1-pyrrolidinyl when R^2 is other than alkylthio and R^8 is other than alkyl, or amino when R^8 is other than alkyl;

R^6 is amino, alkylamino of 1 to 6 carbon atoms or dialkylamino where each alkyl group contains from 1 to 6 carbon atoms and

R^8 is hydrogen, alkyl of 1 to 6 carbon atoms, 2-alkoxyethyl of 3 to 6 carbon atoms, allyl, propargyl, phenyl, 4-methoxyphenyl, 4-chlorophenyl, benzyl, 4-methoxybenzyl, 4-chlorobenzyl, 4-(4-morpholinyl)phenyl or piperonyl.

4,301,282

1-OXA-β-LACTAM ANTIBIOTICS

Allen S. Katner, Indianapolis, Ind., assignor to Eli Lilly and Company, Indianapolis, Ind.

Filed Sep. 17, 1980, Ser. No. 187,862

Int. Cl.^{3} C07D *413/14*

U.S. Cl. 544—90 **10 Claims**

1. A compound of the formula

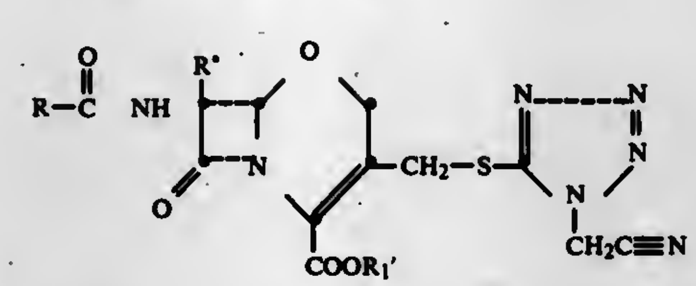

wherein R is an α-carboxysubstituted arylmethyl group of the formula

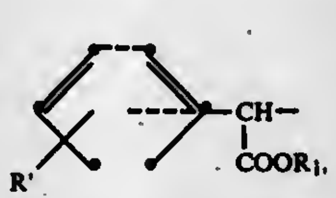

wherein R' is hydrogen, hydroxy, protected hydroxy, acetoxy, C_1–C_3 alkyl, or halogen;

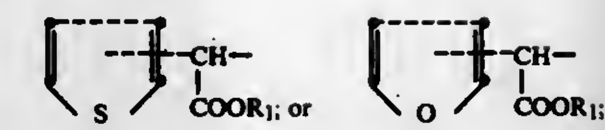

R° is hydrogen or methoxy;

R_1 and R_1' are hydrogen or a carboxy protecting group; and when R_1 and R_1' are hydrogen, the pharmaceutically acceptable non-toxic salts thereof.

4,301,283

PROCESS FOR PREPARING 2-OXO-DIHYDROBENZO(D)(1,3)-OXAZINES

John G. Thorpe, and Peter G. Urben, both of Gosforth, England, assignors to Sterling Drug Inc., New York, N.Y.

Filed Sep. 10, 1980, Ser. No. 185,990

Claims priority, application United Kingdom, Sep. 27, 1979, 33442/79

Int. Cl.^{3} C07D *265/18*

U.S. Cl. 544—92 **31 Claims**

1. A process for preparing a 2-oxo-dihydrobenzo[d][1,3]oxazine of the formula:

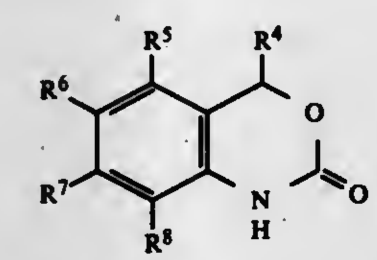

I

wherein R^4 represents hydrogen or a substituent selected from the group consisting of alkyl of 1 to 6 carbon atoms, phenyl and phenyl substituted by a substituent selected from the group consisting of alkyl of 1 to 4 carbon atoms, alkoxy of 1 to 4 carbon atoms, halo and nitro; R^5 and R^8, which can be the same or different, each represents hydrogen or a substituent selected from the group consisting of alkyl of 1 to 3 carbon atoms, alkoxy of 1 to 3 carbon atoms and halo; and R^6 and R^7, which can be the same or different, each represents hydrogen or a substituent selected from the group consisting of alkyl of 1 to 3 carbon atoms, alkoxy of 1 to 3 carbon atoms, halo and nitro; with the proviso that at least two of R^5, R^6, R^7 and R^8 are hydrogen, which comprises suspending or dissolving in a substantially water-immiscible organic medium a 2-carbamoylbenzyl alcohol of the formula:

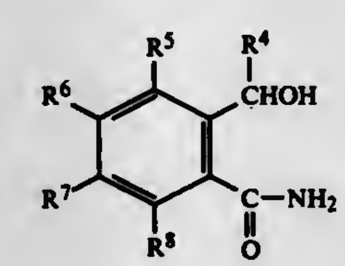

II

wherein R^4, R^5, R^6, R^7 and R^8 are as defined above and treating the formed solution or suspension with an aqueous alkaline solution of a hypochlorite and/or hypobromite having a pH of at least 11 in the presence of a phase transfer catalyst to obtain the compound of formula I.

4,301,284

N-(3-TERTBUTYL-CHLOROPHENYL-2-METHYL-1-PROPYL)-2,6-DIMETHYL MORPHOLINES

Ernst Buschmann; Bernd Zeeh, both of Ludwigshafen; Ernst-Heinrich Pommer, Limburgerhof, and Norbert Goetz, Worms, all of Fed. Rep. of Germany, assignors to BASF Aktiengesellschaft, Fed. Rep. of Germany

Filed May 18, 1979, Ser. No. 40,222

Claims priority, application Fed. Rep. of Germany, Jul. 8, 1978, 2830127

Int. Cl.^{3} C07D *265/30*

U.S. Cl. 544—106 **2 Claims**

1. N-arylpropyl-substituted cyclic amines of the formula

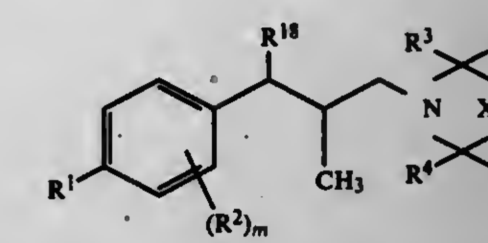

where R^1 is tertiary butyl, R^2 is chlorine, m denotes the integer 1, R^3 and R^4 are hydrogen, X denotes

$$-\underset{R^{14}}{\underset{|}{CH}}-O-\underset{R^{15}}{\underset{|}{CH}}-,$$

R^{14} and R^{15} being methyl, and R^{18} denotes hydrogen, and salts thereof.

4,301,285

SYDNONIMINE CNS STIMULANTS

Reinhardt P. Stein, Audubon, Pa., assignor to American Home Products Corporation, New York, N.Y.

Filed Oct. 2, 1980, Ser. No. 193,041

Int. Cl.^{3} C07D *413/12, 271/04*

U.S. Cl. 544—138 **9 Claims**

1. A hydroxyl protected 3-[1-(hydroxymethyl)-2-phenylethyl)]-N-[(phenylamino)carbonyl]sydnone imine derivative of the formula:

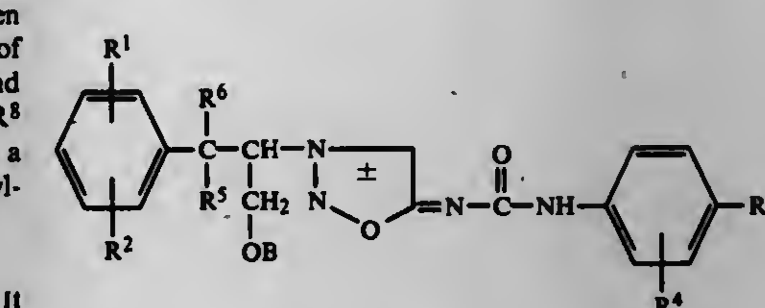

in which

R^1 and R^2 are, independently, hydrogen, alkyl of 1 to 6 carbon atoms, alkoxy of 1 to 6 carbon atoms, halo, perfluoroalkyl of 1 to 3 carbon atoms, nitro, alkanoyl of 2 to 4 carbon atoms, or alkoxycarbonyl of 2 to 4 carbon atoms;

R^3 is hydrogen, halo, nitro or alkanoyl of 2 to 4 carbon atoms;

R^4 is hydrogen, halo, nitro or perfluoroalkyl of 1 to 3 carbon atoms;

R^5 and R^6 are, independently, hydrogen, methyl or ethyl and B is a hydroxy protecting group.

4,301,286

HERBICIDAL O-ALKYL SULFONYLISOUREAS

Gregory W. Schwing, Lincoln University, Pa., and Thomas S. Woods, Wilmington, Del., assignors to E. I. Du Pont de Nemours and Company, Wilmington, Del.

Filed Aug. 20, 1979, Ser. No. 67,787
Int. Cl.[3] C07D *251/42, 251/46, 401/12, 413/12*
U.S. Cl. 544—211 7 Claims

1. A compound selected from compounds having the formula:

$$RSO_2N{=}\overset{\displaystyle W}{\overset{|}{C}}{-}NHR_1$$

wherein

R is 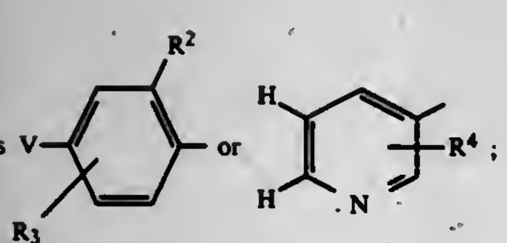;

R[1] is 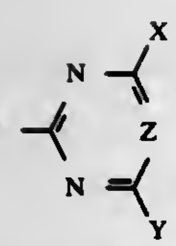

R^2 is CH_3, OCH_3, F, Cl, Br, NO_2, CF_3, $S(O)_mR^{10}$, where m is 0, 1 or 2, COR^5, or $SO_2NR^{10}R^{11}$;
R^3 is H, F, Cl, Br, C_1–C_4 alkyl, or CH_3O;
R^4 is Cl, Br, CH_3, C_1–C_4 alkoxy, NO_2, CO_2R_6, or SCH_3;
R^5 is C_1–C_{10} alkoxy, C_3–C_6 alkenyloxy, C_2–C_6 alkoxy substituted with 1–3 halogens selected from F, Cl, or Br; C_5–C_6 cycloalkoxy, $OCH_2CH_2OR^7$, $O(CH_2)_3OR^7$, C_1–C_4 alkylthio, NR^8R^9 or $N(OCH_3)CH_3$;
R^6 is C_1–C_6 alkyl;
R^7 is CH_3 or C_2H_5;
R^8 and R^9 are independently C_1–C_4 alkyl, or R^8R^9 can be taken together to be $(CH_2)_5$, $(CH_2)_5$, or $O(CH_2CH_2—)_2$;
R^{10} and R^{11} are independently C_1–C_6 alkyl, C_3–C_4 alkenyl, or R^{10} and R^{11} can be taken together to be $(CH_2)_4$, $(CH_2)_5$, or $O(CH_2CH_2—)_2$;
V is H or F;
W is Cl, Br or OR^{12};
R^{12} is C_1–C_{12} alkyl, C_3–C_4 alkenyl, $CH_2CH_2OCH_3$, $CH_2CH_2OCH_2CH_2$, $(CH_2)_3OCH_3$, benzyl, $CHR^{13}CO_2R^{14}$, where R^{13} is H or CH_3 and R^{14} is C_1–C_4 alkyl;
X is CH_3 or OCH_3;
Y is CH_3, C_1–C_4 alkoxy, $O(CH_2)_nOR^{15}$, where n is 1–3 and R^{15} is C_1–C_3 alkyl; $OCHR^{16}CO_2R^{15}$, where R^{16} is H or CH_3; CF_3CH_2O or CCl_3CH_2O;
Z is N;
Q is CH_2 or O; and
A is CH_3 or CH_3O
and their agriculturally acceptable salts.

4,301,287

HETEROCYCLIC COMPOUNDS

Povl Krogsgaard-Larsen, Blovstrod, Denmark, assignor to H. Lundbeck & Co. A/S, Copenhagen-Valby, Denmark

Division of Ser. No. 917,118, Jun. 19, 1978. This application Dec. 17, 1979, Ser. No. 104,080
Claims priority, application United Kingdom, Jun. 20, 1977, 25740/77
Int. Cl.[3] C07D *491/113*
U.S. Cl. 546—19 8 Claims

1. A compound of the formula

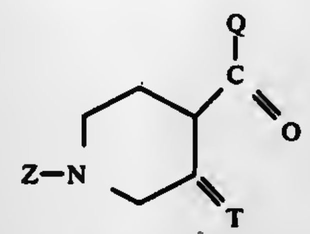

wherein Z is acetyl; a group of the formula

$$R_5{-}O{-}\overset{\displaystyle O}{\overset{\|}{C}}{-},$$

in which R_5 is $C_{1\text{-}8}$ alkyl, phenyl, phenyl substituted in the 4-position with halogen, lower-alkoxy, or lower-alkyl, or phenyl-lower-alkyl in which the phenyl group may be substituted in the 4-position with halogen, lower-alkoxy, or lower-alkyl; trityl; or formyl; T is ethylenedioxy, and Q is halogen lower-alkoxy; lower-alkyl or lower-alkoxy in any of the foregoing containing one through four carbon atoms.

4,301,288

PROCESS FOR 6,7-DIHYDRO-9-FLUORO-5-METHYL-1-OXO-1H,5H-BENZO(IJ)QUINOLIZINE-2-CARBOXYLIC ACID

Charles M. Leir; Kirk G. Hedberg, and Joel R. Jacobson, all of Saint Paul, Minn., assignors to Minnesota Mining and Manufacturing Company, St. Paul, Minn.

Filed Feb. 19, 1980, Ser. No. 122,599
Int. Cl.[3] C07D *455/04, 215/22, 215/18*
U.S. Cl. 546—94 4 Claims

1. A process for the preparation of flumequine comprising:

a. reacting 4-fluoroaniline with a reactant selected from the group consisting of crotonaldehyde, a precursor for crotonaldehyde which generates crotonaldehyde under acidic conditions, and an alcoholic solution of crotonaldehyde or said precursor for crotonaldehyde in the presence of dilute aqueous acid between about 50° and 60° C. to provide a compound of the formula

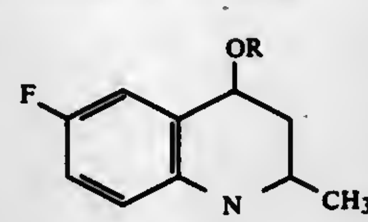

wherein R is hydrogen or alkyl having one, two or three carbon atoms;

b. heating and removing water from the product of step (a) by slowly adding the product to a refluxing solvent which forms a binary azeotrope with water and has a boiling point between 90° and 120° C. to provide a mixture of 6-fluoroquinaldine and 6-fluorotetrahydroquinaldine as acid salts;

c. treating said acid salts with base in the presence of weak acid followed by reducing the mixture to provide 6-fluorotetrahydroquinaldine;

d. condensing said 6-fluorotetrahydroquinaldine with a dialkyl alkoxymethylenemalonate to provide a compound of the formula

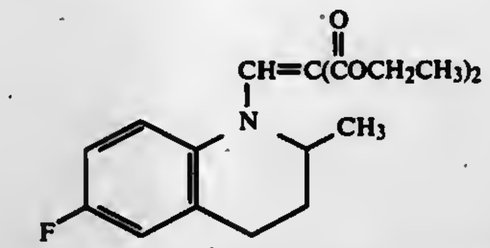

e. cyclizing the product of step (d) by heating in the presence of polyphosphoric acid followed by saponifying to provide flumequine.

3. A process for the preparation of 6-fluorotetrahydroquinaldine comprising:

a. reacting 4-fluoroaniline with a reactant selected from the group consisting of crotonaldehyde, a precursor for crotonaldehyde which generates crotonaldehyde under acidic conditions, and an alcoholic solution of crotonaldehyde or said precursor for crotonaldehyde in the presence of dilute aqueous acid between about 50° and 60° C. to provide a compound of the formula

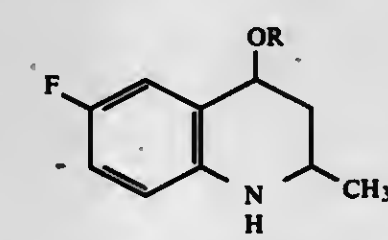

wherein R is hydrogen or alkyl having one, two or three carbon atoms;

b. heating and removing water from the product of step (a) by slowly adding the product to a refluxing solvent which forms a binary azeotrope with water and has a boiling point between 90° and 120° C. to provide a mixture of 6-fluoroquinaldine and 6-fluorotetrahydroquinaldine as acid salts;

c. treating said acid salts with base in the presence of weak acid followed by reducing the mixture to form 6-fluorotetrahydroquinaldine.

4,301,289

PROCESS FOR 6,7-DIHYDRO-9-FLUORO-5-METHYL-1-OXO-1H,5H-BENZO(IJ)QUINOLIZINE-2-CARBOXYLIC ACID

Charles M. Leir, New Richmond, Wis., and Kirk G. Hedberg, Minneapolis, Minn., assignors to Minnesota Mining and Manufacturing Company, St. Paul, Minn.

Filed Feb. 19, 1980, Ser. No. 122,657
Int. Cl.[3] C07D *455/04, 215/22*
U.S. Cl. 546—94 6 Claims

1. A process for the preparation of flumequine comprising:

a. reacting 4-fluoroaniline with a reactant selected from the group consisting of crotonaldehyde, a precursor for crotonaldehyde which generates crotonaldehyde under acidic conditions, and an alcoholic solution of crotonaldehyde or said precursor for crotonaldehyde in the presence of dilute aqueous acid between about 50° and 60° C. to provide a compound of the formula

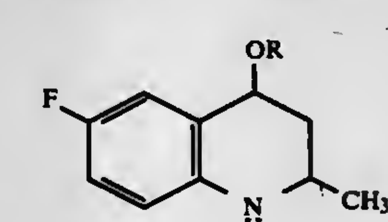

wherein R is hydrogen or alkyl having one, two or three carbon atoms;

b. heating the product of step (a) to provide a mixture of 6-fluoroquinaldine and 6-fluorotetrahydroquinaldine as acid salts;

c. treating said acid salts with base in the presence of weak acid followed by reducing the mixture to provide 6-fluorotetrahydroquinaldine;

d. condensing said 6-fluorotetrahydroquinaldine with a dialkyl alkoxymethylenemalonate to provide a compound of the formula

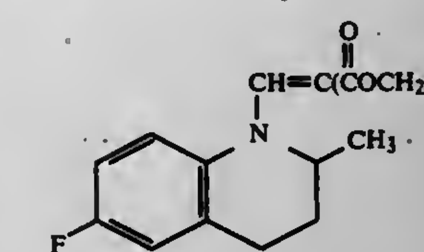

e. cyclizing the product of step (d) by heating in the presence of polyphosphoric acid followed by saponifying to provide flumequine.

6. A process for the preparation of 6-fluorotetrahydroquinaldine comprising:

a. reacting 4-fluoroaniline with a reactant selected from the group consisting of crotonaldehyde, a precursor for crotonaldehyde which generates crotonaldehyde under acidic conditions, and an alcoholic solution of crotonaldehyde or said precursor for crotonaldehyde in the presence of dilute aqueous acid between about 50° and 60° C. to provide a compound of the formula

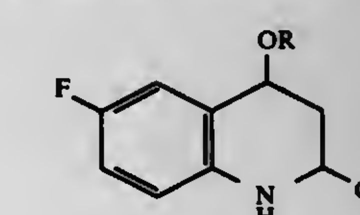

wherein R is hydrogen or alkyl having one, two or three carbon atoms;

b. heating the product of step (a) in dilute acid to provide a mixture of 6-fluoroquinaldine and 6-fluorotetrahydroquinaldine as acid salts;

c. treating said acid salts with base in the presence of weak acid followed by reducing the mixture to form 6-fluorotetrahydroquinaldine.

4,301,290

ORGANIC COMPOUNDS

Paul Pfäffli, Oberwil, and Hartmut Hauth, Riehen, both of Switzerland, assignors to Sandoz Ltd., Basel, Switzerland

Continuation-in-part of Ser. No. 944,487, Sep. 21, 1978, abandoned, which is a continuation-in-part of Ser. No. 914,707, Jun. 12, 1978, abandoned, which is a continuation-in-part of Ser. No. 749,349, Dec. 10, 1976, abandoned. This application Mar. 7, 1979, Ser. No. 18,439
Claims priority, application Switzerland, Dec. 16, 1975, 16283/75; Dec. 16, 1975, 16284/75; Sep. 22, 1977, 11599/77; Mar. 10, 1978, 2643/78; May 12, 1978, 5205/78; Jun. 8, 1978, 6283/78
Int. Cl.[3] C07D *217/14, 217/16;* A61K *31/47*
U.S. Cl. 546—143 24 Claims

1. A compound of the formula

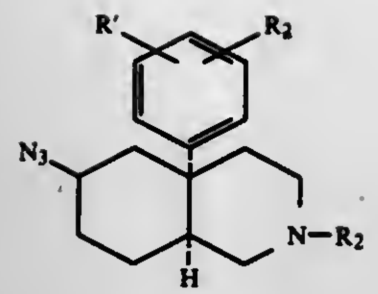

where

R' represents OR_1 wherein

R_1 is hydrogen, alkyl of 1 to 4 carbon atoms or alkanoyl of 1 to 4 carbon atoms, and

R'' is hydrogen, and

R_2 is alkyl of 1 to 6 carbon atoms, a radical of formula II

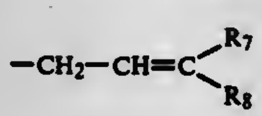

(II)

wherein

R_7 and R_8 independently represent hydrogen or alkyl of 1 to 4 carbon atoms,

a radical of formula III

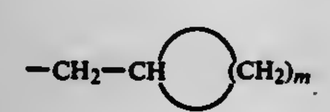

(III)

where m is a whole number from 2 to 4, a radical of formula IV

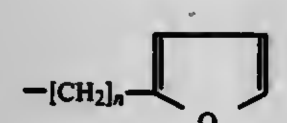

IV

where n is 1 or 2, or a radical of formula V

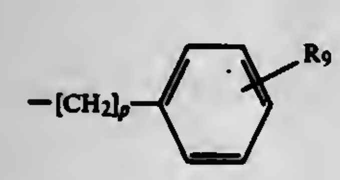

V

where

P is 1 or 2, and

R_9 is hydrogen, halogen, trifluoromethyl, lower alkoxy, lower alkyl, amino or di(lower alkyl) amino,

in free base form or in pharmaceutically acceptable acid addition salt form,

---

4,301,291

INTERMEDIATES FOR 6,7-DIHYDRO-9-FLUORO-5-METHYL-1-OXO-1H,5H-BENZO(IJ)QUINOLIZINE-2-CARBOXYLIC ACID

Charles M. Leir, New Richmond, Wis., assignor to Minnesota Mining and Manufacturing Company, St. Paul, Minn.

Filed Feb. 19, 1980, Ser. No. 122,470

Int. Cl.³ C07D ***215/22, 455/04***

U.S. Cl. 546—153 **5 Claims**

1. A compound of the formula

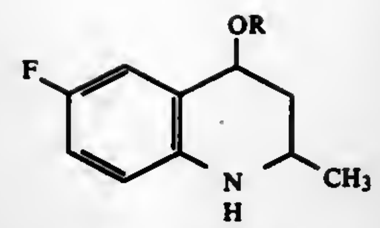

wherein R is hydrogen or alkyl having one, two or three carbon atoms and acid addition salts thereof.

4,301,292

1-[2-(4,5-DIHYDRO-4,4-DIALKYL-2-OXAZOLYL)-PHENYL]-4-(DIALKYLAMINO)CYCLOHEXANOL

Lawrence L. Martin, Lebanon, N.J., and Manfred Worm, Wiesbaden-Naurod, Fed. Rep. of Germany, assignors to Hoechst-Roussel Pharmaceuticals, Incorporated, Somerville, N.J.

Division of Ser. No. 73,055, Sep. 6, 1979. This application Nov. 28, 1980, Ser. No. 211,150

Int. Cl.³ C07D ***263/08***

U.S. Cl. 548—239 **2 Claims**

1. A compound of the formula

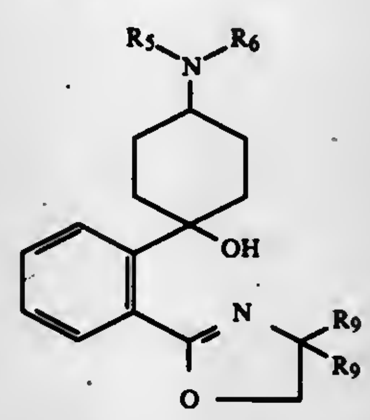

wherein R_5, R_6 and R_9 are loweralkyl; and the geometrical isomers and optical antipodes thereof.

4,301,293

HERBICIDAL COMPOSITIONS AND PYRAZOLE DERIVATIVES

Takuo Konotsune, Hiromachi, and Katsuhiko Kawakubo, Yasumachi, both of Japan, assignors to Sankyo Company Ltd., Tokyo, Japan

Division of Ser. No. 953,357, Oct. 23, 1978, abandoned, which is a continuation of Ser. No. 838,083, Sep. 30, 1977, Pat. No. 4,146,726, which is a division of Ser. No. 558,682, Mar. 17, 1975, Pat. No. 4,063,925. This application Mar. 20, 1980, Ser. No. 132,110

Claims priority, application Japan, Mar. 28, 1974, 49-34939

The portion of the term of this patent subsequent to Mar. 27, 1996, has been disclaimed.

Int. Cl.³ C07D ***231/20***

U.S. Cl. 548—377 **5 Claims**

1. A sulfonic ester of a compound having the formula

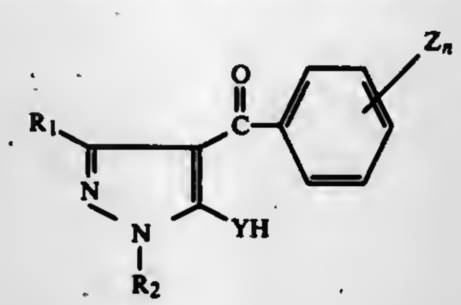

wherein

R_1 represents a hydrogen atom or an alkyl group having from 1 to 3 carbon atoms,

R_2 is an alkyl group having from 1 to 3 carbon atoms or an alkenyl group having 3 or 4 carbon atoms,

Z's are the same or different and each represents a halogen atom, an alkyl group having from 1 to 4 carbon atoms or a nitro group, and

n is an integer of 2 or 3,

and a sulfonic acid having the formula

R_6-SO_2-OH

wherein

R_6 is an alkyl group having 1 to 4 carbon atoms, a halogenoalkyl group having 1 to 3 carbon atoms, and 1 to 3 halogen atoms, or a phenyl group optionally having a substituent selected from the group consisting of C_{1-12} alkyl and a halogen.

4,301,294

16-PHENOXY PGE₂ COMPOUNDS

Norman A. Nelson, Galesburg, Mich., assignor to The Upjohn Company, Kalamazoo, Mich.

Division of Ser. No. 426,058, Dec. 19, 1973, which is a division of Ser. No. 252,030, May 10, 1972. This application Dec. 19, 1980, Ser. No. 218,140

Int. Cl.³ C07C ***117/00***

U.S. Cl. 560—53 **8 Claims**

1. An optically active compound of the formula

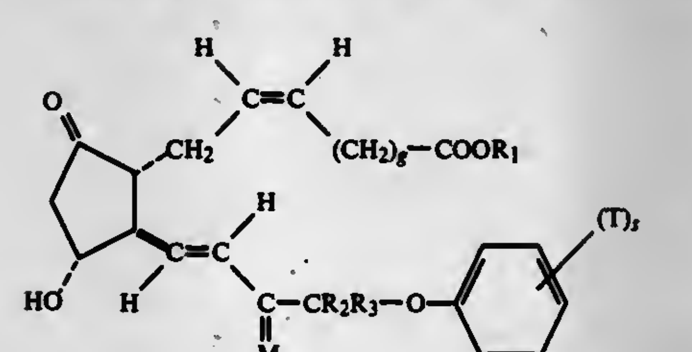

or a racemic compound of that formula and the mirror immage thereof,

wherein g is an integer from 2 to 5, inclusive;

wherein M is α-OH:β-H or β-OH:α-H;

wherein R_1 is hydrogen or alkyl of one to 12 carbon atoms, inclusive, cycloalkyl of 3 to 10 carbon atoms, inclusive, aralkyl of 7 to 12 carbon atoms, inclusive, phenyl, or phenyl substituted with one, 2, or 3 chloro or alkyl of one to 4 carbon atoms, inclusive;

wherein R_2 and R_3 are hydrogen, methyl, or ethyl;

wherein T is alkyl of one to 3 carbon atoms, inclusive, fluoro, chloro, trifluoromethyl, or —OR_4, wherein R_4 is alkyl of one to 3 carbon atoms, inclusive, and

wherein s is zero, one, 2, or 3, with the proviso that not more than two T's are other than alkyl, including the lower alkanoates thereof, and the pharmacologically acceptable salts thereof when R_1 is hydrogen.

4,301,295

4-PHENOXY-PHENOXY-ALKANE-CARBOXYLIC ACID DERIVATIVES AND PROCESS FOR THEIR MANUFACTURE

Helmut Nahm, and Ernold Granzer, both of Kelkheim, Fed. Rep. of Germany, assignors to Hoechst Aktiengesellschaft, Frankfurt am Main, Fed. Rep. of Germany

Continuation-in-part of Ser. No. 905,049, May 11, 1978, Pat. No. 4,238,626, which is a continuation-in-part of Ser. No. 542,061, Jan. 17, 1965, abandoned, which is a continuation of Ser. No. 273,770, Jul. 21, 1972, abandoned. This application Aug. 20, 1980, Ser. No. 179,889

The portion of the term of this patent subsequent to Dec. 9, 1997, has been disclaimed.

Int. Cl.³ C07C ***69/736, 59/68***

U.S. Cl. 560—62 **7 Claims**

1. An ester of the formula

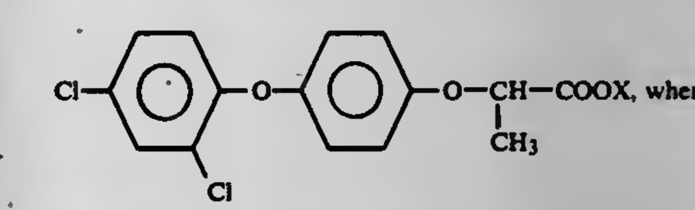

X is alkyl having 1 to 4 carbon atoms.

4,301,296

ANTIOXIDANT COMBINATION OF ESTERS AND AMINES

Joseph A. Kuczkowski, Cuyahoga Falls, Ohio, assignor to The Goodyear Tire & Rubber Company, Akron, Ohio

Continuation of Ser. No. 909,746, May 26, 1978, Pat. No. 4,241,217, which is a division of Ser. No. 668,567, Mar. 19, 1976, Pat. No. 4,125,515. This application Sep. 29, 1980, Ser. No. 191,793

Int. Cl.³ C07C ***149/20***

U.S. Cl. 560—152 **3 Claims**

1. A compound having the structure

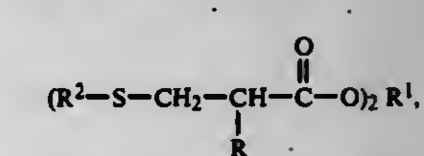

wherein R is hydrogen or methyl and wherein R^1 is a polyalkyl glycol ether radical having the following structure:

$$-(CH_2-CH_2-O)_{n^1}CH_2-CH_2-$$

wherein n^1 is 1-7 and R^2 is a primary alkyl radical having from 1-24 carbon atoms.

4,301,297

PROCESS FOR PREPARING DIMETHYLAMINOETHYL METHACRYLATE

Yoshiya Kametani, and Yasuo Iino, both of Yokohama, Japan, assignors to Nitto Chemical Industry Co., Ltd., Tokyo, Japan

Filed Nov. 4, 1977, Ser. No. 848,523

Claims priority, application Japan, Nov. 26, 1976, 51-141306

Int. Cl.³ C07C ***67/03***

U.S. Cl. 560—217 **7 Claims**

1. A process for preparing dimethylaminoethyl methacrylate which comprises subjecting methyl methacrylate and dimethlaminoethanol to transesterification, characterized by using di-n-octyltin oxide as a catalyst, there being present about 0.1 to about 0.5% by weight of moisture based on the dimethylaminoethanol.

4,301,298
LIGHT ENDS RECOVERY IN ETHYL ACRYLATE PROCESS

Theodore Horlenko, Corpus Christi; James L. Paul, and James W. Gordon, both of Houston, all of Tex., assignors to Celanese Corporation, New York, N.Y.

Filed May 23, 1980, Ser. No. 152,885
Int. Cl.³ C07C *67/48;* B01D *3/10*
U.S. Cl. 560—218 13 Claims

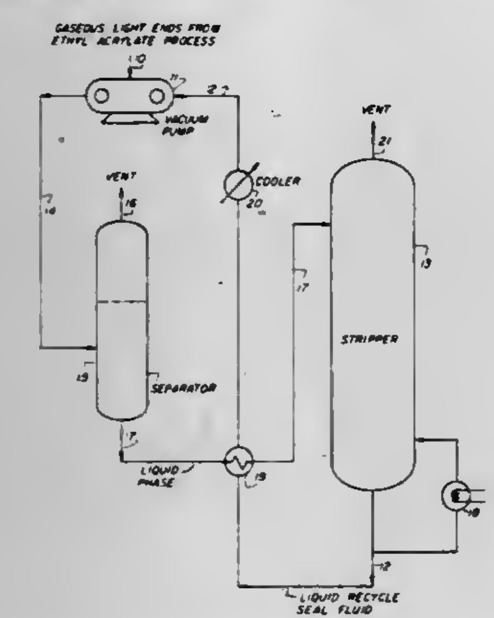

1. In a process for the production of ethyl acrylate by the reaction of ethylene with acrylic acid in the presence of a sulfuric acid catalyst wherein the reaction products are distilled in a vacuum distillation system at a reduced pressure less than atmospheric to obtain a liquid ethyl acrylate product and also resulting in a first gaseous light ends stream from said vacuum distillation system containing sulfur dioxide and also containing ethylene, ethyl acrylate and other organic light ends by-products, which said first gaseous light ends stream passes through a vacuum pump providing the reduced pressure for said vacuum distillation system, which said vacuum pump utilizes a liquid seal fluid to provide a liquid seal therein and in which said vacuum pump said first gaseous light ends stream mixes with and is partially absorbed in said liquid seal fluid to result in a gas-liquid mixture which is discharged from said vacuum pump, and which said gas-liquid mixture so discharged is fractionated to recover a liquid recycle stream comprising liquid seal fluid and which said liquid recycle stream is recycled to said vacuum pump, the improvements which comprise (a) utilizing as said liquid seal fluid a normally liquid hydrocarbon which has a minimum boiling point of 425° F. and 90% by weight of which boils within the range of about 425° F. to 800° F., and (b) fractionating said gas-liquid mixture so discharged as to recover a said liquid recycle stream comprising said liquid seal fluid which is substantially free of sulfur dioxide and does not contain in excess of about 40% by weight of ethyl acrylate.

4,301,299
SYNTHESIS OF UREA

Shigeru Inoue, Kamakura, and Hiroshi Ono, Fujisawa, both of Japan, assignors to Toyo Engineering Corporation, Tokyo, Japan

Filed Nov. 3, 1980, Ser. No. 203,595
Claims priority, application Japan, Oct. 8, 1979, 54/128860
Int. Cl.³ C07C *126/02, 126/08*
U.S. Cl. 564—67 13 Claims

1. A process for synthesizing urea which comprises reacting carbon dioxide and ammonia in a urea synthesis zone at urea synthesis pressures and temperatures, separating unreacted carbon dioxide and ammonia from the resultant urea synthesis effluent as a gaseous mixture under pressures substantially equal to said urea synthesis pressures, recycling a sufficient amount of said gaseous mixture to maintain said urea synthesis temperatures at a predetermined level to said urea synthesis zone in the gaseous state, and subjecting the balance to conden-

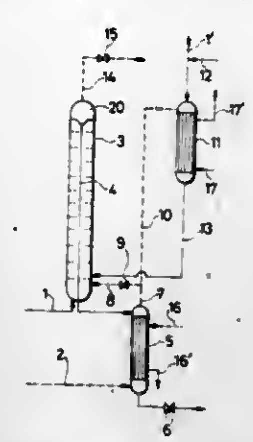

sation under pressures substantially equal to said urea synthesis pressures for recycle in the liquid state to said urea synthesis zone.

4,301,300
SULFONAMIDE INTERMEDIATES FOR ADRENERGIC BLOCKING AGENTS

Kenneth E. Fahrenholtz, Bloomfield; Robert W. Guthrie, Saddle Brook; Richard W. Kierstead, and Jefferson W. Tilley, both of North Caldwell, all of N.J., assignors to Hoffmann-La Roche Inc., Nutley, N.J.

Division of Ser. No. 73,051, Sep. 6, 1979, Pat. No. 4,247,710, which is a division of Ser. No. 875,966, Feb. 8, 1978, Pat. No. 4,202,978. This application Aug. 22, 1980, Ser. No. 180,258
Int. Cl.³ C07C *143/75, 143/79*
U.S. Cl. 564—92 2 Claims

1. The compound of the formula

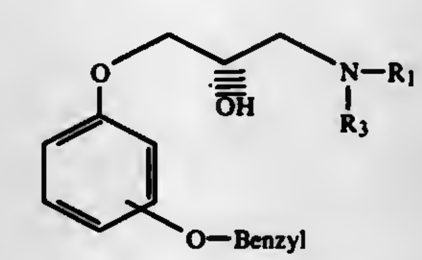

wherein R_1 is lower alkyl and R_3 is selected from the group consisting of mesyl, tosyl, brosyl and benzenesulfonyl.

2. The compound of the formula

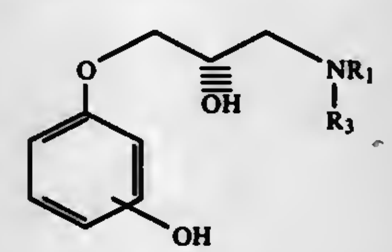

wherein R_1 is lower alkyl and R_3 is selected from the group consisting of mesyl, brosyl, tosyl and benzenesulfonyl.

4,301,301
METHOD FOR PRODUCING TRIPHENYLPHOSPHINE

Kiyoshi Fukui, and Noboru Kakeya, both of Ichihara, Japan, assignors to UBE Industries, Ltd., Chiba, Japan

Filed Apr. 30, 1980, Ser. No. 145,327
Claims priority, application Japan, May 11, 1979, 54-57009
Int. Cl.³ C07F *9/50*
U.S. Cl. 568—17 8 Claims

1. A method for producing triphenylphosphine comprising reacting, a triphenylphosphine dihalide with pressurized hydrogen in a solvent consisting of at least one member selected from the group consisting of monochlorobenzene and dichlorobenzenes.

4,301,302
TETRAALKYL SUBSTITUTED TRICYCLIC KETONE

Mark A. Sprecker, Sea Bright; James M. Sanders, Eatontown; William L. Schreiber, Jackson; Hugh Watkins, Lincroft; Joaquin F. Vinals, Red Bank, all of N.J.; Edward J. Shuster, Brooklyn, N.Y.; Thomas J. O'Rourke, Red Bank, N.J.; Myrna L. Hagedorn, Highland Park, N.J., and Philip Kiemarczyk, Old Bridge, N.J., assignors to International Flavors & Fragrances Inc., New York, N.Y.

Continuation-in-part of Ser. No. 95,149, Nov. 16, 1979, Pat. No. 4,250,338. This application Nov. 13, 1980, Ser. No. 206,617
The portion of the term of this patent subsequent to Feb. 10, 1998, has been disclaimed.
Int. Cl.³ C07C *49/453*
U.S. Cl. 568—373 1 Claim

1. The tricyclic ketone having the structure:

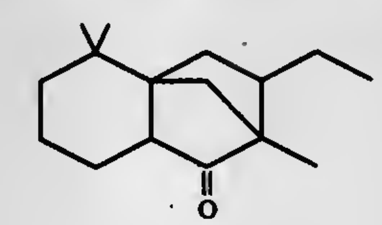

4,301,303
MUSK-LIKE SCENTS AND THEIR MANUFACTURE

Werner Hoffmann, Neuhofen; Karl von Fraunberg, Bobenheim, and Manfred Baumann, Mannheim, all of Fed. Rep. of Germany, assignors to BASF Aktiengesellschaft, Fed. Rep. of Germany

Filed Jul. 1, 1977, Ser. No. 812,153
Int. Cl.³ C07C *49/547, 49/307*
U.S. Cl. 568—375 4 Claims

1. Cyclododecanes and cyclododecenes of the formula I

(I)

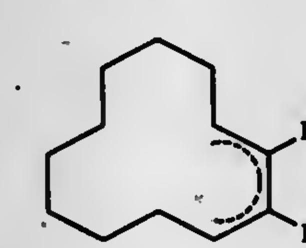

where R^1 is H, $—CH_3$ or $—C_2H_5$, R^2 is $—CO-R^3$, where R^3 is alkyl of 1 to 3 carbon atoms, and in each molecule one or none of the bonds shown in broken lines is an additional bond.

4,301,304
3-PHENOXY-α-(1′,2′-DIBROMOVINYL)-BENZYL ALCOHOL

Jozef Drabek, Oberwil; Peter Ackermann, Reinach; Saleem Farooq, Ettingen; Laurenz Gsell, Basel, and Odd Kristiansen, Möhlin, all of Switzerland, assignors to Ciba-Geigy Corporation, Ardsley, N.Y.

Division of Ser. No. 51,081, Jun. 22, 1979, Pat. No. 4,238,504, which is a continuation-in-part of Ser. No. 955,667, Oct. 27, 1978, abandoned. This application Apr. 18, 1980, Ser. No. 142,496
Claims priority, application Switzerland, Nov. 1, 1977, 13287/77; Sep. 25, 1978, 9991/78
Int. Cl.³ C07C *43/275*
U.S. Cl. 568—637 1 Claim

1. The compound of the formula

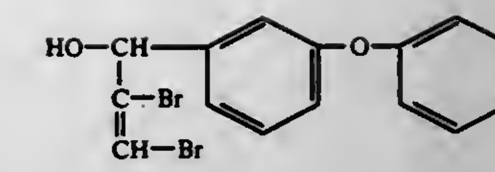

4,301,305
CONTINUOUS PROCESS FOR PREPARATION OF DIAN

Maciej Kiedik, Gliwice; Jozef Kolt, Zabrze; Jerzy Czyz, Kedzierzyn-kozle; Edward Grzywa, Warsaw; Anna Niezgoda, and Kazimierz Terelak, both of Kedzierzyn-Kozle, all of Poland, assignors to Instytut Ciezkiej Syntezy Organicznej "Blachownia", Kedzierzyn-Kozle, Poland

Filed Dec. 28, 1979, Ser. No. 108,403
Claims priority, application Poland, Dec. 30, 1978, 212470
Int. Cl.³ C07C *39/12*
U.S. Cl. 568—727 4 Claims

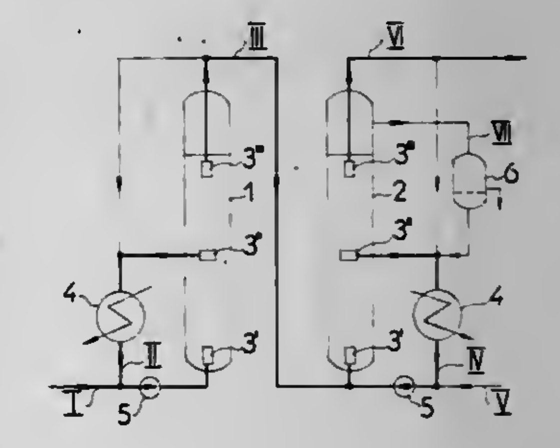

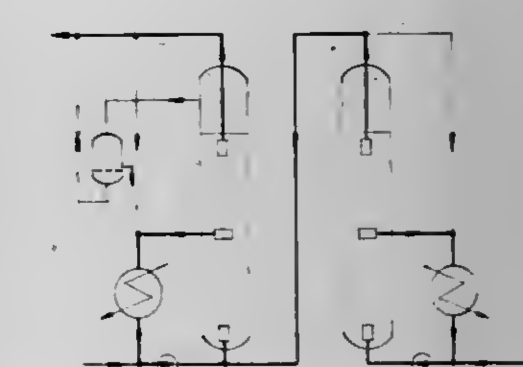

1. A method of preparing dian by condensation of phenol with acetone in the presence of acid ion-exchange catalyst of sulfonated copolymer of styrene and divinylbenzene, with multiple circulation of the reaction mixture through a catalyst bed, wherein said process is conducted in three stages, characterized in that said three stages of the process are performed in two reactors in two stationary catalyst beds, each of the beds having a height of 5-20 m, each of said beds being divided into an upper and bottom zone; wherein said reaction mixture is circulated in particular stages of the process with a different linear velocity, said first stage of the process being conducted in the bed of the first reactor in turn in said bottom and then upper zone of the catalytic bed at a temperature of 80°-85° C., said second stage being carried out in the bottom zone of the catalytic bed of the second reactor at a temperature of 65° C. to 90° C., and the third stage of the process being conducted in the upper zone of the second reactor at a temperature of 70° to 95° C., wherein said linear velocity of flow of the reaction mixture through the bottom zones of the catalytic bed in both of the reactors is not greater than 10 m/h, and the linear velocity of flow of the reaction mixture through the upper zones of the catalyst bed in both of the reactors is not greater than 4 m/h.

4,301,306
NORBORNENYL PHENOLIC COMPOUNDS
Robert W. Layer, Cuyahoga Falls, Ohio, assignor to The B. F. Goodrich Company, Akron, Ohio
Filed Mar. 27, 1980, Ser. No. 134,380
Int. Cl.³ C07C *39/23*
U.S. Cl. 568—734 **5 Claims**

1. Novel compounds defined by the following structural formula:

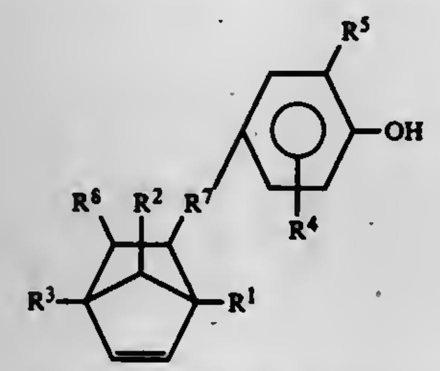

where R^1, R^2, and R^3 are individually selected from hydrogen and alkyl groups of 1 to 3 carbon atoms; R^4 is selected from hydrogen, alkyl groups containing 1 to 12 carbon atoms, and substituted and unsubstituted alicyclic groups of 4 to 8 carbon atoms; R^5 is selected from alkyl groups containing 1 to 6 carbon atoms, and substituted and unsubstituted alicyclic groups of 4 to 8 carbon atoms; R^7 is selected from alkylene and alkenylene groups containing 1 to 8 carbon atoms; and R^6 is selected from hydrogen and alkyl and alkenyl groups containing 1 to 8 carbon atoms.

4,301,307
PROCESS FOR THE HYDROXYLATION OF AROMATIC COMPOUNDS
Michel Jouffret, Francheville le Bas, France, assignor to Rhone-Poulenc Industries, Paris, France
Division of Ser. No. 889,352, Mar. 23, 1978. This application Dec. 20, 1979, Ser. No. 105,776
Claims priority, application France, Jul. 25, 1975, 75 23313
Int. Cl.³ C07C *37/60, 41/26*
U.S. Cl. 568—771 **17 Claims**

1. A process for the hydroxylation of an aromatic compound having the structural formula:

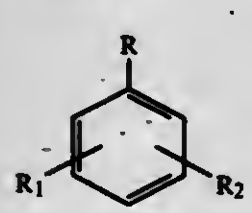

wherein R is selected from the group consisting of hydrogen, lower alkyl having from 1 to 3 carbon atoms, and lower alkoxy having from 1 to 3 carbon atoms, R_1 and R_2 are independently selected from the group consisting of hydrogen, lower alkyl having from 1 to 3 carbon atoms and hydroxy, with the proviso that, when either R_1 or R_2 is hydroxy, then R is lower alkoxy, which process comprises reacting such organic compound with hydrogen peroxide at a reaction temperature between about −40° and 10° C., in a reaction medium comprising trifluoromethanesulfonic acid, wherein the volume ratio between the trifluoromethanesulfonic acid and the aromatic compound is at least about 0.25, the molar ratio of hydrogen perioxide/aromatic compound is between about 0.025 and 0.3, and the weight of the trifluoromethanesulfonic acid is between about 1 and 30%, to thereby form the hydroxylated aromatic compound reaction product of the following formulae:

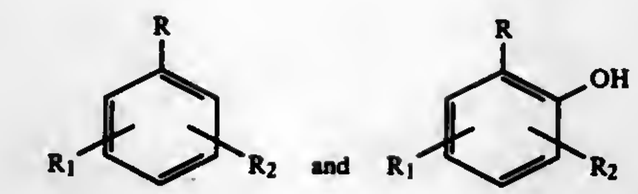

wherein R, R_1, and R_2 are as defined before.

4,301,308
PROCESS FOR THE PREPARATION OF O-CRESOL AND 2,6-XYLENOL
Roberto Canavesi, Bollate; Ferdinando Ligorati, Usmate, and Giancarlo Aglietti, Milan, all of Italy, assignors to Societe Italiana Resine S.I.R. S.p.A., Turin, Italy
Continuation of Ser. No. 772,722, Feb. 28, 1977, which is a continuation of Ser. No. 633,702, Nov. 20, 1975, abandoned. This application Jul. 21, 1978, Ser. No. 927,134
Int. Cl.³ C07C *37/01, 37/16*
U.S. Cl. 568—804 **7 Claims**

1. A method for preparing o-cresol and 2,6-xylenol, which comprises flowing a gaseous stream containing methanol and phenol in a molar ratio of said phenol to said methanol from 1:1 to 1:2, through a fluidized bed of alumina particles from 20 to 100 microns in size, operating at a temperature of from 200° C. to 400° C. the alumina being in the eta (η) crystallographic form, having a surface area of from 100 to 500 m^2/g and an overall pore volume of from 0.3 to 0.6 ml/g, said alumina having been pre-treated with a stream of air or inert gas at a temperature of from 450° to 550° C. for a period of at least 2 hours.

4,301,309
CYCLOHEXENEMETHANOLS AND LOWER ALKYL ESTERS THEREOF
Mark A. Sprecker, Sea Bright; Frederick L. Schmitt, Holmdel; Manfred H. Vock, Locust; Joaquin F. Vinals, Red Bank, all of N.J., and Jacob Kiwala, Brooklyn, N.Y., assignors to International Flavors & Fragrances Inc., New York, N.Y.
Division of Ser. No. 46,936, Jun. 7, 1979, Pat. No. 4,231,940, which is a division of Ser. No. 953,128, Oct. 20, 1978, Pat. No. 4,195,099. This application Nov. 16, 1979, Ser. No. 95,086
Int. Cl.³ C07C *35/18, 69/07, 69/145, 69/24*
U.S. Cl. 568—826 **9 Claims**

1. A cyclic chemical compound defined according to the structure:

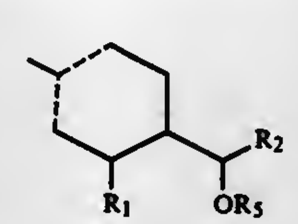

wherein R_1 is selected from the group consisting of hydrogen and methyl; R_2 is C_3–C_5 alkyl or alkenyl; and R_5 is hydrogen or C_1–C_4 acyl and wherein one of the dashed lines is a carbon-carbon single bond and the other of the dashed lines is a carbon-carbon double bond.

4,301,310
PROCESS FOR THE PREPARATION OF LOW MOLECULAR WEIGHT POLYHYDROXYL COMPOUNDS
Kuno Wagner, Leverkusen, Fed. Rep. of Germany, assignor to Bayer Aktiengesellschaft, Leverkusen, Fed. Rep. of Germany
Division of Ser. No. 829,173, Aug. 30, 1977, Pat. No. 4,219,508. This application Feb. 20, 1980, Ser. No. 122,931
Claims priority, application Fed. Rep. of Germany, May 11, 1977, 2721186
Int. Cl.³ C07C *29/14*
U.S. Cl. 568—863 **3 Claims**

1. The process for the preparation of a mixture of low molecular weight polyhydric alcohols comprising condensing formaldehyde in an aqueous reaction medium in the presence of metal compounds as catalysts and of compounds capable of enediol formation as cocatalysts stopping the condensation of formaldehyde with itself by cooling and/or by inactivation of the catalyst with acids when the reaction mixture has a residual formaldehyde content of from 0 to 10% by weight, and removing the catalyst, wherein synthesis gases containing formaldehyde are continuously or discontinuously introduced at temperatures of between 10° and 150° C. into an absorption liquid comprising

(a) 5 to 99% by weight of water,
(b) 0.1 to 90% by weight of compounds capable of enediol formation as cocatalysts,
(c) 0 to 20% by weight of soluble or insoluble metal compounds as catalyst optionally bound to high molecular weight carriers, and
(d) 0 to 60% by weight of one or more monohydric or higher hydric organic compounds having a molecular weight of from 32 to 10,000,

and having a pH of 3 to 10, with the formaldehyde being condensed at the same time or, if the absorption solution contains no catalyst, the formaldehyde is condensed subsequently by addition of catalyst and wherein the carbonyl groups in the formaldehyde condensation products are reduced to hydroxyl groups by post-treatment with an inorganic base and optionally excess formaldehyde for a period of 30 minutes to 12 hours at 10° to 100° C. and at a pH of from 9 to 13.

4,301,311
PROCESS FOR THE PREPARATION OF DICYCLOPENTYLENE [2,2'-BIS(4-ALKYL-6-T-BUTYLPHENOLS)]
Rolf Müller, Polling; Werner Hartmann, and Zdenek Kuca, both of Waldkraiburg, all of Fed. Rep. of Germany, assignors to Chemische Werke Lowi GmbH, Waldkraiburg, Fed. Rep. of Germany
Filed Jul. 20, 1979, Ser. No. 59,253
Claims priority, application Fed. Rep. of Germany, Aug. 9, 1978, 2834944; Oct. 4, 1978, 2843323; Jul. 2, 1979, 2926593
Int. Cl.³ C07C *37/14*
U.S. Cl. 568—719 **9 Claims**

1. A process for the preparation of dicyclopentylene [2,2'-bis(4-alkyl-6-t-butylphenols)] of the formula I

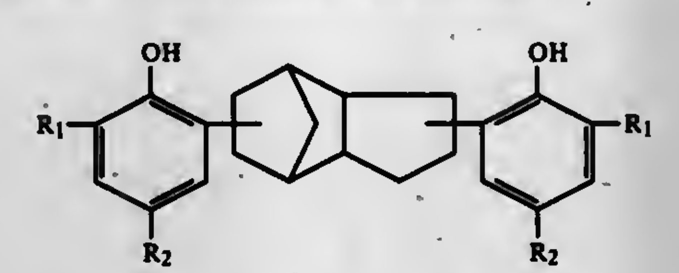

(I)

wherein
R_1 is tertiary butyl and
R_2 is methyl or ethyl,
by the reaction of 1.5 to 2.5 moles of a 4-alkyl-6-t-butyl-phenol of the formula II

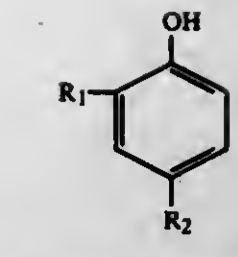

(II)

wherein R_1 and R_2 are as defined above,
with 0.8 to 1.2 moles dicyclopentadiene at a temperature between 20° and 120° C. in the presence of an organic solvent and borontrifluoride or a complex thereof as catalyst, characterised in that the solvent is selected from:

(a) an aromatic solvent which does not enter into any significant trans-alkylation with the tertiary butyl group of the 4-alkyl-6-t-butyl-phenol under the reaction conditions in the presence of the catalyst,
(b) a non-aromatic solvent which does not possess significant nucleophilic properties which strongly reduces or practically eliminates the activity of the catalyst, or
(c) a mixture of (a) and (b)

and that the reaction is carried out under practically anhydrous conditions.

4,301,312
METHOD AND SYSTEM FOR ETHANOL PRODUCTION
Harold M. Feder, and Michael J. Chen, both of Darien, Ill., assignors to The United States of America as represented by the United States Department of Energy, Washington, D.C.
Filed May 21, 1980, Ser. No. 151,996
Int. Cl.³ C07C *27/00, 29/32, 29/36*
U.S. Cl. 568—902 **21 Claims**

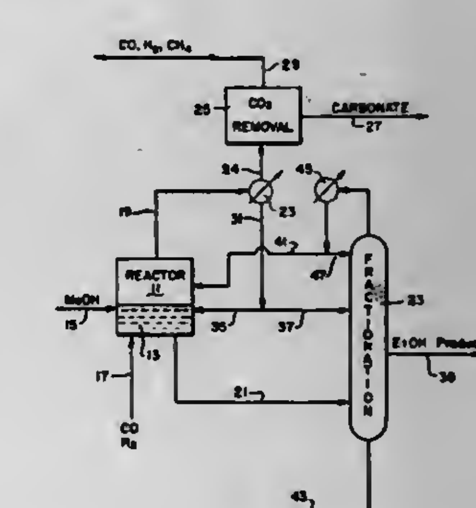

1. A method of selectively producing ethanol from methanol comprising:

forming an organic solution including methanol solvent and further including in solution a tertiary amine and, a transition metal carbonyl selected from the group consisting of iron carbonyls, ruthenium carbonyls and combinations thereof;

contacting the organic solution with a flow of gas containing H_2 and CO to react with methanol and form ethanol and CO_2 substantially without the production of water in accordance with the overall reaction;

$$MeOH+2CO+H_2 \rightarrow EtOH+CO_2$$

recovering ethanol as product.

4,301,313
HALOGENATED ETHYNYL BIPHENYLS

Winston S. Marshall, Bargersville, and William Pfeifer, Indianapolis, both of Ind., assignors to Eli-Lilly and Company, Indianapolis, Ind.

Division of Ser. No. 428,163, Dec. 26, 1973, Pat. No. 3,991,212. This application Nov. 8, 1974, Ser. No. 522,006

Int. Cl.^{3} C07C *25/26*

U.S. Cl. 570—128 **7 Claims**

1. A compound selected from the group consisting of (3-chloro-4-phenylphenyl)acetylene; (3-methyl-4-phenylphenyl-)acetylene; (3-fluoro-4-phenylphenyl)acetylene; (4-(2,4-difluorophenyl)phenyl)acetylene; and (4-(2,5-difluorophenyl)-phenyl)acetylene.

4,301,314
VAPOR PHASE CHLORINATION OF 1,1-DICHLOROETHANE

Walker H. Rideout, and Mary E. Jeselnik, both of Corpus Christi, Tex., assignors to PPG Industries, Inc., Pittsburgh, Pa.

Filed Feb. 21, 1978, Ser. No. 879,029

Int. Cl.^{3} C07C *17/10*

U.S. Cl. 570—253 **6 Claims**

1. In a process for the production of the methylchloroform wherein chlorine and 1,1-dichloroethane are reacted under conditions of temperature and pressure sufficient to maintain the reactants in the vapor phase, the improvement comprising conducting said vapor phase reaction between chlorine and 1,1-dichloroethane in the presence or a controlled quantity of elemental oxygen in amounts of up to about 600 parts per million parts of chlorine and 1,1,-dichloroethane to obtain a reaction product having a higher mole percentage of methylchloroform than that obtained were the reaction conducted in the absence of oxygen uner the same conditions of temperature and pressure, and at the same reactants ratio.

4,301,315
METHOD OF PRODUCING HIGH OCTANE ALKYLATE GASOLINE

Donald M. Haskell, and Floyd Farha, Jr., both of Bartlesville, Okla., assignors to Phillips Petroleum Company, Bartlesville, Okla.

Filed Sep. 22, 1977, Ser. No. 835,940

Int. Cl.^{3} C07C *2/06, 2/56*

U.S. Cl. 585—304 **5 Claims**

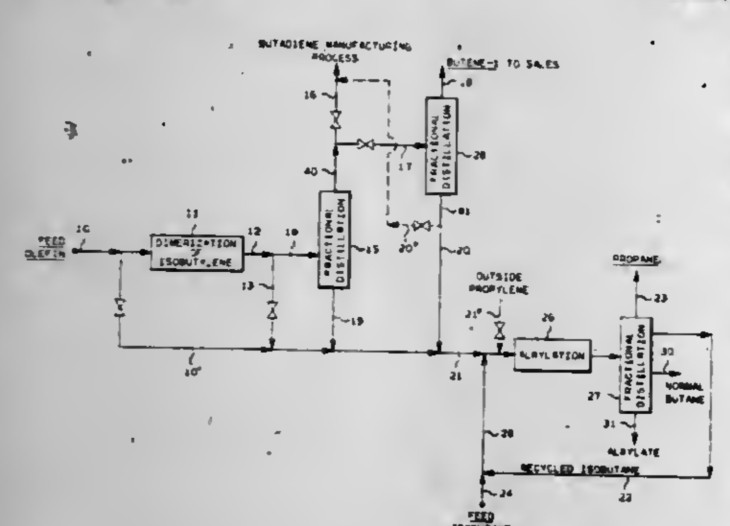

1. A process for producing a high octane alkylate gasoline, 1,3-butadiene, and high purity butene-1 from a 4-carbon olefin-containing feed stream comprising isobutylene, butenes-2, and butene-1, said process comprising:

(a) charging a first portion of said 4-carbon olefin-containing feed stream to an isobutylene dimerization reaction so as to form a first reaction mixture containing dimers;

(b) fractionally distilling is a first fractional distillation zone at least a portion of said first reaction mixture so as to recover said dimers and to produce a second stream comprising said butenes-2 and said butene-2;

(c) charging said dimers to an alkylation feed stream;

(d) charging a first portion of said second stream to a butadiene reaction so as to form 1,3-butadiene as a product of said process;

(e) charging a second portion of said 4-carbon olefin-containing feed stream to said alkylation feed stream;

(f) charging said alkylation feed stream to an alkylation process so as to form a high octane alkylate gasoline; and

(g) charging a second portion of said second stream to a second fractional distillation zone to produce a high purity butene-1-stream and to produce a third stream comprising butenes-2.

4,301,316
PREPARING PHENYLALKANES

Lewis B. Young, Skillman, N.J., assignor to Mobil Oil Corporation, New York, N.Y.

Filed Nov. 20, 1979, Ser. No. 96,094

Int. Cl.^{3} C07C *2/64, 15/07*

U.S. Cl. 585—455 **11 Claims**

1. A process for the selective alkylation of aromatic compounds with relatively long chain length alkylating agents to selectively produce 2-phenylalkanes; said alkylating agents comprising aliphatic or aromatic organic compounds having one or more available reactive alkyl groups of at least five carbons in the hydrocarbon chain; said process comprising contacting said aromatic compound with said alkylating agent in the presence of a crystalline zeolite catalyst, at a temperature of between about 50° C. and about 500° C. and a pressure withn the approximate range of 2.5×10^4 N/m^2 to 2.5×10^7 N/m^2; said crystalline zeolite catalyst being chosen from the group consisting of: mazzite, zeolite Beta, ZSM-20, ZSM-38 and synthetic and naturally occurring isotypes thereof.

4,301,317
PREPARATION OF 2-PHENYLALKANES

Lewis B. Young, Skillman, N.J., assignor to Mobil Oil Corporation, New York, N.Y.

Filed Nov. 20, 1979, Ser. No. 96,095

Int. Cl.^{3} C07C *2/64, 15/107*

U.S. Cl. 585—455 **11 Claims**

1. A process for the selective alkylation of an aromatic compound with a relatively long chain length alkylating agent to produce linear phenylalkanes enriched in the 2-phenylalkane isomer; said alkylating agent comprising an aliphatic or aromatic organic compound having one or more available reactive alkyl groups of at least five carbons in the linear hydrocarbon chain; said process comprising contacting said aromatic compound with said alkylating agent in the presence of a selective zeolite catalyst at a temperature of between about 50° C. and about 500° C. and a pressure within the approximate range of 2.5×10^4 N/m^2 to 2.5×10^7 N/m^2; said selective zeolite catalyst being characterized by a crystal structure having channels or network of pores therethru, the major dimension of the openings to said channels or networks of pores being between about 6 and about 7 angstroms.

4,301,318
PROCESS FOR RECOVERING OLIGOMERIZATION PRODUCT

David L. Beach, Gibsonia, and James J. Harrison, Glenshaw, both of Pa., assignors to Gulf Research & Development Company, Pittsburgh, Pa.

Continuation-in-part of Ser. No. 179,080, Aug. 18, 1980, Ser. No. 179,079, Aug. 18, 1980, Ser. No. 179,078, Aug. 18, 1980, Ser. No. 179,076, Aug. 18, 1980, and Ser. No. 179,005, Aug. 18, 1980. This application Nov. 25, 1980, Ser. No. 210,413

Int. Cl.^{3} C07C *2/02, 2/26*

U.S. Cl. 585—526 **62 Claims**

1. A process for recovering normal alpha olefins from an

oligomerization reaction product obtained by contacting ethylene under oligomerization conditions with a nickel ylide defined by the following formula:

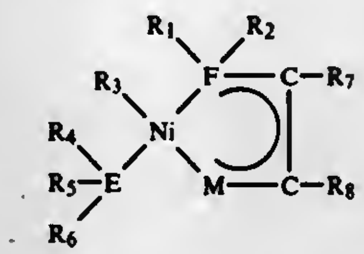

wherein R_1, R_2, R_3, R_4, R_5, R_6, R_7 and R_8 are either alike or different members selected from the group consisting of hydrogen, alkyl radicals having from about one to about 24 carbon atoms, aryl radicals having from about six to about 20 carbon atoms, alkenyl radicals having from about two to about 30 carbon atoms, cycloalkyl radicals having from about three to about 40 carbon atoms, aralkyl and alkaryl radicals having from about six to about 40 carbon atoms, halogen radicals, hydroxyl, alkoxy and aryloxy groups, and hydrocarbyl groups carrying halogen, hydroxyl, alkoxy or aryloxy groups, provided that at least one of each of R_1 to R_8 radicals is a sulfonato group or an alkyl, aryl, alkenyl, cycloalkyl, aralkyl or alkaryl carrying a sulfonato group, M is sulfur or oxygen, E is phosphorus, arsenic, antimony or nitrogen and F is phosphorus, arsenic or antimony, which comprises contacting said reaction product with ammonium hydroxide to obtain a product composed of two layers, an upper layer containing normal alpha olefins and a lower layer containing nickel ylide residue, and then separating said layers from each other to recover the desired normal alpha olefins.

4,301,319
MANUFACTURE OF ALLENE FROM ACETONE

Janice L. Greene, Chagrin Falls, Ohio, assignor to Standard Oil Company, Cleveland, Ohio

Filed May 16, 1980, Ser. No. 150,506

Int. Cl.^{3} C07C *1/253*

U.S. Cl. 585—638 **5 Claims**

1. A method of preparing allene from acetone, the method comprising contacting acetone with an alumina catalyst at a temperature between about 300° and 700° C.

4,301,320
COOLING OF ELECTRICAL FURNACES
Otto Hochstrasser, Franklin Park; William S. Roby, E. Brunswick, and Frank V. Madaffore, N. Brunswick, all of N.J., assignors to Brown Boveri Corporation, N. Brunswick, N.J.
Filed Apr. 18, 1980, Ser. No. 141,589
Int. Cl.³ F27D *1/12*
U.S. Cl. 13—32 **14 Claims**

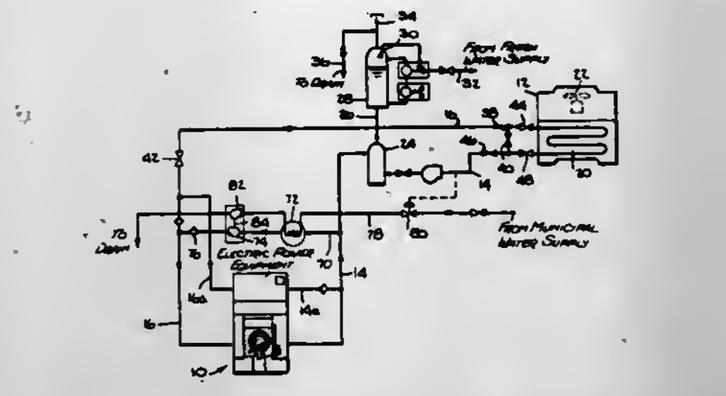

1. Apparatus for providing emergency cooling to electrical furnaces comprising a furnace of the type in which a primary coolant liquid flows in a closed loop through coils in the furnace and through a separate heat exchanger, a bypass conduit interconnected into said closed loop circuit for permitting at least a portion of the primary coolant liquid flowing in said circuit to bypass said separate heat exchanger, a second heat exchanger interposed in said bypass conduit, an emergency coolant flow conduit arranged to direct a flow of emergency coolant liquid through said second heat exchanger and means arranged to utilize the flow energy of said emergency coolant liquid in said emergency coolant flow conduit to drive said primary coolant liquid through said bypass conduit.

4,301,321
TWO-AXIS FOCUSING ENERGY CONCENTRATOR
Frederick T. C. Bartels, Lake View Ter., Calif., assignor to Spectrolab, Sylmar, Calif.
Filed Aug. 11, 1980, Ser. No. 177,306
Int. Cl.³ H01L *31/04;* **F24J** *3/02;* **G02B** *5/00*
U.S. Cl. 136—246 **7 Claims**

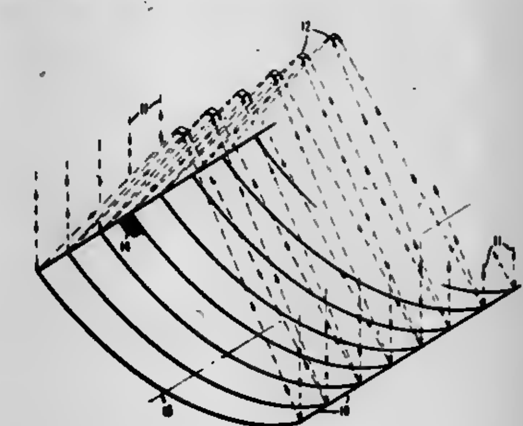

1. An energy concentrator comprising:
(a) one or more panels comprising at least one Fresnel reflector element per panel, each Fresnel reflector element having grooves arranged in a substantially linear configuration so as to reflect incident radiant energy into a substantially rectangular focal zone, and each Fresnel reflector element curved about an axis perpendicular to the grooves so that the focal zone is shorter than the length of the Fresnel reflector element;
(b) one or more energy absorbers associated with each panel, upon which the reflected energy is focused;
(c) means for extracting the absorbed radiant energy from each absorber;
(d) means for supporting each absorber in the focal zone of the reflector; and
(e) means for maintaining the entire panel assembly in a position so that the reflector aperture is substantially normal to the direction of the source of the incident radiant energy.

4,301,322
SOLAR CELL WITH CORRUGATED BUS
James A. Amick, Princeton, N.J., assignor to Exxon Research & Engineering Co., Florham Park, N.J.
Filed Apr. 3, 1980, Ser. No. 136,947
Int. Cl.³ H01L *31/04*
U.S. Cl. 136—256 **23 Claims**

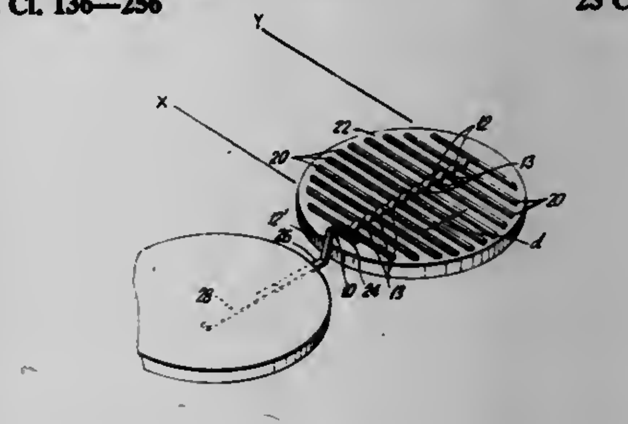

1. A solar cell having a prefabricated conductive bus for providing electrical contact to a major surface thereof, said bus comprising a strip of electrically conductive metal foil having corrugations extending for a majority of its major length wherein physical and electrical contact between the surface of the solar cell and the bus occurs at a plurality of positions along the major length of the bus.

4,301,323
LEAD-DOPED SILICON WITH ENHANCED SEMICONDUCTOR PROPERTIES
Norbert Schink, München, Fed. Rep. of Germany, assignor to Siemens Aktiengesellschaft, Berlin and München, Fed. Rep. of Germany
Filed May 21, 1980, Ser. No. 152,046
Claims priority, application Fed. Rep. of Germany, May 30, 1979, 2922055; May 30, 1979, 2922063
Int. Cl.³ H01L *31/00, 31/04, 31/18*
U.S. Cl. 136—261 **31 Claims**

1. Process for production of poly-crystalline silicon having semiconductor properties with improved optoelectronic properties, which comprises forming the poly-crystalline silicon by thermal decomposition of a reaction mixture of a gaseous silicon compound selected from the group consisting of silicon chloroform and silicon tetrachloride mixed with a carrier gas containing hydrogen, depositing said poly-crystalline silicon onto a silicon carrier body which is heated by means of direct passage of electric current, and adding lead to the poly-crystalline silicon during its production, as an agent which increases the carrier life time.

4,301,324

GLASS-CERAMIC STRUCTURES AND SINTERED MULTILAYER SUBSTRATES THEREOF WITH CIRCUIT PATTERNS OF GOLD, SILVER OR COPPER

Ananda H. Kumar, Wappingers Falls, N.Y.; Peter W. McMillan, Leamington Spa, England, and Rao R. Tummala, Wappingers Falls, N.Y., assignors to International Business Machines Corporation, Armonk, N.Y.

Filed Feb. 6, 1978, Ser. No. 875,703

Int. Cl.³ H05K *1/03*

U.S. Cl. 174—68.5 **8 Claims**

1. A glass ceramic article with the internal mass thereof comprising:

a homogenous distribution of a microstructure of a pervasive continuous connected network of 2 to 5 μm crystallites selected from the group consisting of (A) β-spodumene with the interstices of said network thereof occupied by residual glass having dispersed therein discrete secondary 1 to 2 μm crystallites of lithium metasilicate and (B) alphacordierite with the interstices thereof occupied by residual glass having dispersed therein secondary 1 to 2 μm crystallites of clinoestatite, with said article being substantially non-porous throughout the volume thereof; and

an electrical conductor pattern embedded in said article having terminal portions terminating at at least one surface of said article for electrical connection thereto.

4,301,325

SEALING CONDUITS

John B. Hutchison, Kingsley, England, assignor to BICC Limited, London, England

Filed Dec. 14, 1979, Ser. No. 103,628

Claims priority, application United Kingdom, Dec. 21, 1978, 49729/78; Aug. 29, 1979, 7929881

Int. Cl.³ H02G *3/06, 15/04, 1/14*

U.S. Cl. 174—76 **9 Claims**

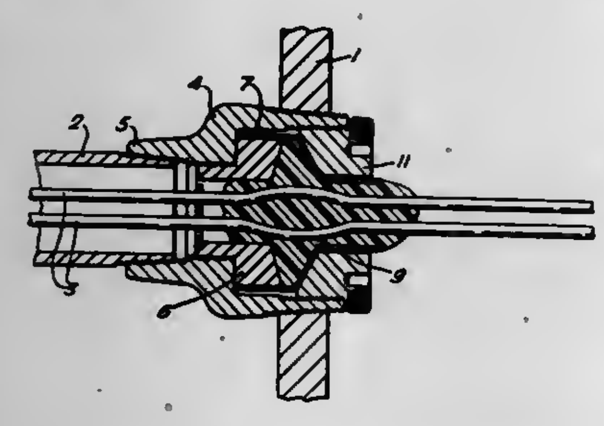

1. A kit for sealing a conduit end around at least one insulated conductor comprising: a chamber having a peripheral wall, a base with an opening through it for communicating with said conduit and an opening opposite said base; a supply of a setting resin compound; a carrier for holding a preformed annular body of the compound, in a condition capable of but offering resistance to flow, during insertion into said chamber: and means for applying pressure to said annular body when in said chamber to cause it to flow and to produce a sealing body in peripherally continuous contact with said chamber and with said at least one insulated conductor.

4,301,326

CONTROLLABLE CURSOR VACUUM HOLD DOWN

Henry T. Hetzel, and Michael A. Tremblay, both of Loveland, Colo., assignors to Hewlett-Packard Company, Palo Alto, Calif.

Continuation of Ser. No. 964,013, Nov. 27, 1978, abandoned. This application Jul. 11, 1980, Ser. No. 167,608

Int. Cl.³ G08C *21/00;* A45D *42/14*

U.S. Cl. 178—18 **25 Claims**

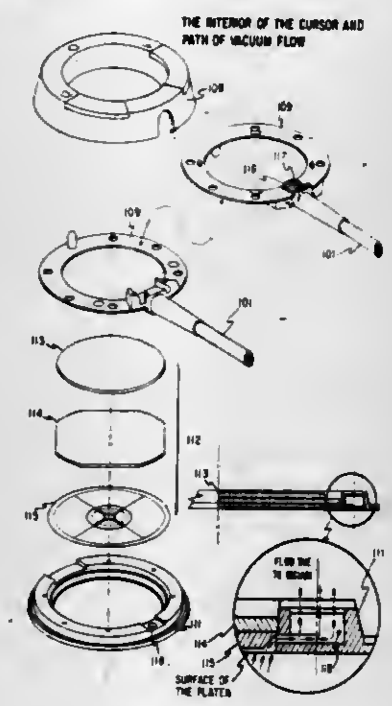

1. In a digitizer having a cursor which is moveable across a work surface, a vacuum hold down for the cursor, the vacuum hold down comprising:

a cursor base, having a contact surface that touches the work surface when the cursor is in use, the contact surface having a closed periphery, the cursor base also having a vacuum passage connected at one end to the vacuum source means recited below and opening elsewhere into the region of the cursor base generally bounded by the periphery of the contact surface, the vacuum passage for providing a path along which the atmosphere may be evacuated from the region that is within the periphery of the contact surface and between the cursor base and the work surface when the cursor is on the work surface; and

vacuum source means for supplying at least a partial vacuum to the vacuum passage in the cursor base, thereby causing the cursor to adhere by suction to the work surface when the cursor is placed upon the work surface.

4,301,327

REDUCTION OF MESSAGE REDUNDANCY BY MULTIPLE SUBSTITUTION: A MESSAGE PREPROCESSING SCHEME FOR SECURE COMMUNICATIONS

Lin-nan Lee, 18515 Eagles Roost Dr., Germantown, Md. 20767, and Shyue-Ching Lu, P.O. Box 71, Chung-Li Taiwan 320, Taiwan

Filed Jun. 5, 1979, Ser. No. 45,706

Int. Cl.³ H04K *9/00*

U.S. Cl. 178—22.10 **9 Claims**

1. In a method of maintaining communications security, including the steps of enciphering an input message signal comprising a plurality of characters a_i to form a cryptogram signal, transmitting and receiving said cryptogram signal and decipering the cryptogram to recover the original input message signal, the improvement comprising:

preprocessing the message signal prior to enciphering by substituting for each character a_i in the original alphabet A of the original message signal a character a'_i in a subset A'_i of a new alphabet A', which is assigned to said character a_i, to thereby form a new stream of characters a'_i, wherein the subset A'_i for at least one character a_i comprises at least two charaacters from which a'_i is selected;

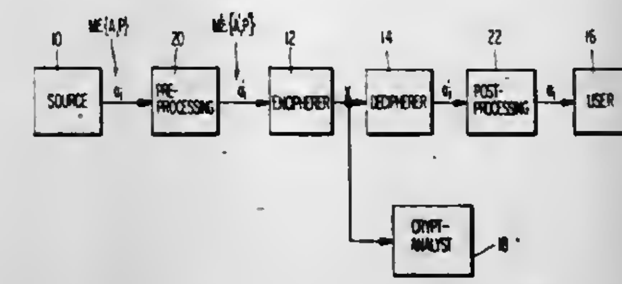

enciphering said stream of characters a'_i to form said cryptogram signal;

deciphering the received cryptogram signal to obtain a stream of characters a'_i; and

postprocessing the stream of characters a'_i by substituting for each character a'_i the character a_i in the original message signal to which said character a'_i corresponds.

4,301,328

VOICE SYNTHESIZER

Mark V. Dorais, Detroit, Mich., assignor to Federal Screw Works, Detroit, Mich.

Continuation of Ser. No. 714,495, Aug. 16, 1976, Pat. No. 4,128,737. This application Nov. 29, 1978, Ser. No. 964,603

The portion of the term of this patent subsequent to Dec. 5, 1995, has been disclaimed.

Int. Cl.³ G10L *1/00*

U.S. Cl. 179—1 SA **4 Claims**

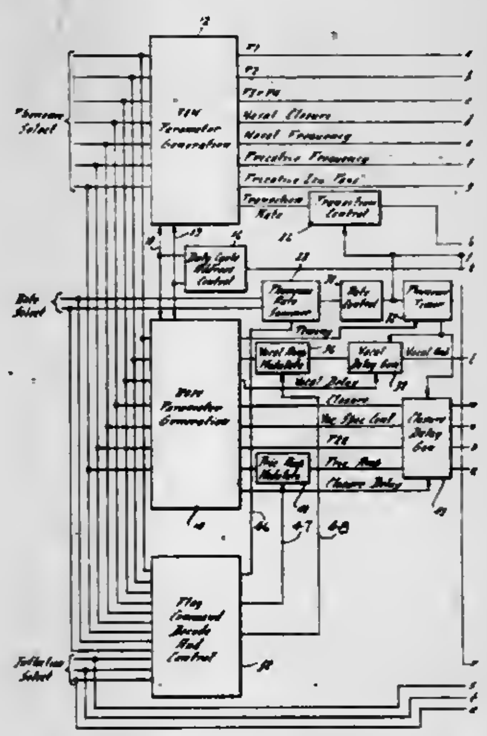

1. In an electronic device for phonetically synthesizing human speech including input means responsive to preselected input data identifying a desired sequence of phonemes for producing control signals representing the parameters defining said phonemes, timing means responsive to one of said control signals for producing a timing signal that determines the duration of production of each of said phonemes, and vocal tract means responsive to said control signals for producing an audio output comprised of said desired sequence of phonemes; the improvement comprising:

programmable rate control means responsive to certain of said input data for selectably varying the speech rate of said audio output by producing a speech rate signal in accordance with certain of said input data that is provided to said timing means to vary said timing signal.

4,301,329

SPEECH ANALYSIS AND SYNTHESIS APPARATUS

Tetsu Taguchi, Tokyo, Japan, assignor to Nippon Electric Co., Ltd., Tokyo, Japan

Filed Jan. 4, 1979, Ser. No. 942

Claims priority, application Japan, Jan. 9, 1978, 53-1282; Jan. 9, 1978, 53-1283; Nov. 10, 1978, 53-138690

Int. Cl.³ G10L *1/00*

U.S. Cl. 179—1 SA **10 Claims**

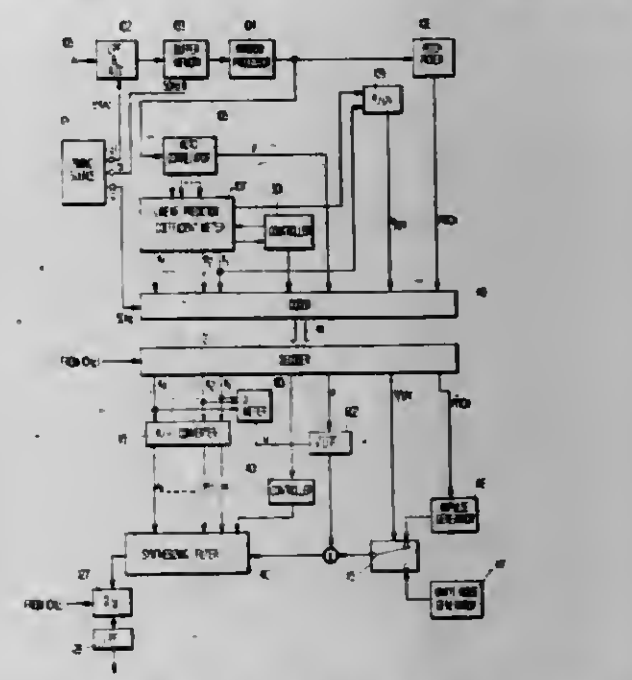

1. A speech analysis and synthesis apparatus including a speech analysis part and a speech synthesis part, in which said speech analysis part comprises:

means for converting a speech sound into an electrical signal;

a filter for removing the frequency components of the electrical signal higher than a predetermined frequency;

an analog to digital converter for converting into a train of digital code words the otuput of said filter;

a memory for temporarily storing a given-length segment of the digital code word train during a predetermined frame period;

a window processor supplied with said code word read out from said memory for each predetermined frame period for window processing it and for storing the result of window processing;

autocorrelation means for determining the autocorrelation coefficient for each of said code words included in said one frame period;

calculating means for receiving the output of said autocorrelation means and calculating and providing a series of linear predictor coefficients of successively higher order representative of the spectrum information of said speech sound and a normalized predictive residual power forming speech sound source information of said speech sound;

a controller coupled to said calculating means for stopping the calculation of said linear predictor coefficients with higher order when said normalized predictive residual power falls below a predetermined value while at the same time transmitting a control signal representative of the order of the last linear predictor coefficient obtained before the calculating is stopped;

sound information means for generating sound information signals representing characteristics such as the voiced/unvoiced condition, the amplitude or the pitch of said code words;

means coupled to said calculating means, controller and sound information means for qunatizing said linear predic-

tor coefficients, said sound information signals and said control signal for transmission; and in which said synthesis part comprises:

combining means for generating a filter input signal from said sound information signals;

a synthesizing digital filter receiving as an input said filter input signal having a coefficient determined by said linear predictor coefficients, the number of stages of said filter being variable;

means for controlling the number of stages of said synthesizing digital filter corresponding to the order of the last linear predictor coefficient obtained in the analysis part; and

means for converting the output signal of said synthesizing digital filter into an analog signal.

4,301,330
LOUDSPEAKER PROTECTION CIRCUIT

Bruce Trump, St. Joseph, Mich., assignor to Zenith Radio Corporation, Glenview, Ill.

Filed Sep. 28, 1979, Ser. No. 79,904
Int. Cl.³ H02H *3/20, 7/20*

U.S. Cl. 179—1 A **13 Claims**

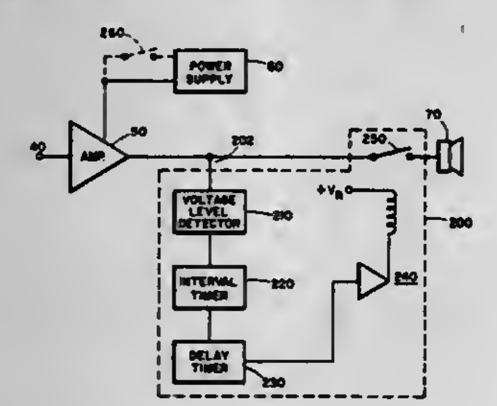

1. A protection circuit for a loudspeaker driven by an amplifier comprising:

detector means coupled to said amplifier for generating a control signal when a signal driving said loudspeaker crosses a predetermined threshold voltage;

interval timing means coupled to said detector means for generating a disconnect signal when the time interval between selected control signals exceeds a predetermined limit; and

switch means in circuit between said amplifier and said loudspeaker and coupled to said interval timing means for receiving said disconnect signal for interrupting the supply of said driving signal to said loudspeaker.

4,301,331
COMPOSITE LIMITING SUM AND DIFFERENCE CIRCUITRY FOR EXTENDING THE RECEPTION AREA OF A FREQUENCY MODULATED STEREO RADIO TRANSMITTER

John J. Yurek, R.D. #6, Box 413, Irwin, Pa. 15642

Continuation of Ser. No. 770,807, Feb. 22, 1977, abandoned. This application Nov. 15, 1979, Ser. No. 94,508
Int. Cl.³ H04H *5/00*

U.S. Cl. 179—1 GC **8 Claims**

1. A frequency-modulated stereo transmitter for connection to stereo audio equipment generating at least two audio channel signals in at least two channels, the transmitter comprising:

means for generating signals representative of relationships of at least one sum of at least two audio signals and at least one difference of at least two of said audio signals;

means for controlling the amplitude of the representative relationship signals having an input operatively connected to the representative signal generating means and generating amplitude controlled representative relationship signals; and

an FM transmitter unit operatively connected to the amplitude controlling means and receiving said amplitude controlled representative relationship signals and to transmit at least one FM signal containing information including said amplitude controlled relationship signals over an FM channel having predetermined frequency characteristics, predetermined bandwidth and predetermined maximum modulation,

Wherein the representative relationship generating means includes means for generating at least two representative stereo signals,

And wherein the stereo generating means includes means for generating at least an audio frequency channel, a lower side band channel and an upper side band channel,

And wherein the amplitude controlling means controls said representative relationship signals such that said predetermined maximum modulation is not exceeded,

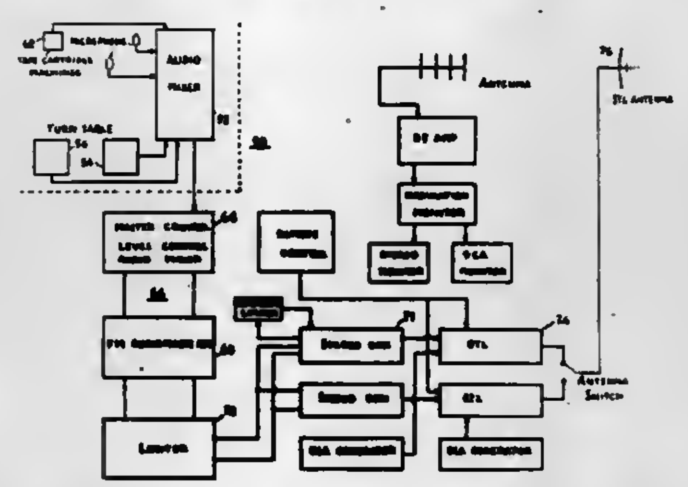

And including means for adding a pilot carrier frequency signal to the transmitted FM signals,

And wherein the pilot carrier adding means operatively adds a signal representative of said pilot carrier frequency signal to the amplitude controlled representative relationship signals,

And wherein said representative relationship generating means generates a pilot carrier signal, and said transmitter includes means for attenuating the pilot carrier signal added by said representative relationship generating means,

and including means operatively connected with said representative signal generating means for decreasing the amplitude of the signal received by the transmitter unit for a period of time when at least one of the audio signals diminishes below a predetermined amplitude.

4,301,332
WOOFER LOUDSPEAKER

Norman Dusanek, 8116 Deering Ave., Canoga Park, Calif. 91304

Filed Jan. 8, 1980, Ser. No. 110,532
Int. Cl.³ H04R *1/28*

U.S. Cl. 179—1 E **12 Claims**

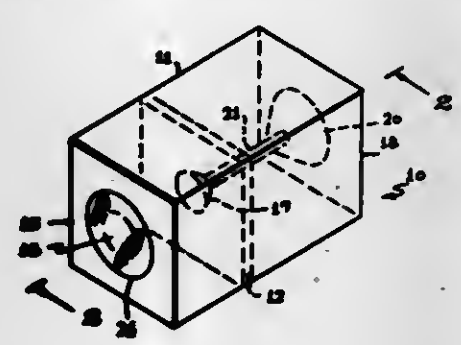

1. A woofer loudspeaker comprising:

an enclosure having opposite end walls arranged in fixed spaced apart relationship;

an inner baffle secured in said enclosure between said opposite end walls defining the interior thereof into a pair of air tight chambers;

an active loudspeaker mounted on a wall of said enclosure and having a cone facing exteriorly of said enclosure so as to produce a back soundwave within a first of said air tight chambers; and

passive loudspeaker means mounted on said baffle and a second wall of said walls responsive to said back soundwave produced by said active loudspeaker to produce an amplified soundwave exteriorly of said enclosure.

4,301,333
SPEECH COMPRESSION

Richard J. Gillette, Winfield, Mo., assignor to McDonnell Douglas Corporation, St. Louis, Mo.

Continuation of Ser. No. 838,387, Sep. 30, 1977, abandoned. This application Apr. 30, 1979, Ser. No. 34,767
Int. Cl.³ H03K *13/32*

U.S. Cl. 179—15.55 R **4 Claims**

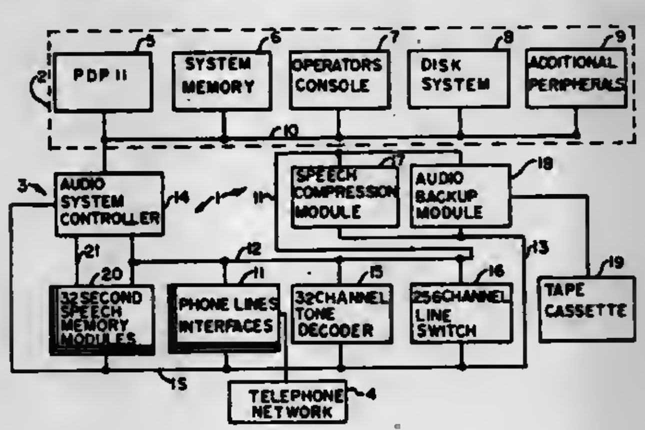

1. A system for real time audio data compression and expansion, comprising:

means for digitizing input audio data;

means for sampling the digitized audio data;

means for determining the maximum amplitude of the audio data over some predetermined time period;

a first programmable read-only memory means having an input side operatively connected to said maximum amplitude determining means for encoding the maximum amplitude to obtain a gain factor at an output side;

a second programmable read-only memory means having a first input operatively connected to the output side of said first programmable read-only memory means and a second input for receiving the digitized audio data corresponding to the predetermined time period for which the gain factor is determined, said second programmable read-only memory means utilizing the gain factor at its first input in conjunction with the digitized audio data at its second input to obtain a scaled value of the audio data so as to provide a reconstituted compressed sample data at its output side thereby obtaining an approximate two-to-one reduction in the bit size of the compressed sample data as compared to the bit size of the digitized audio data;

means for transmitting the reconstituted compressed sample data from the output side of the second programmable read-only memory means and the gain factor from the output side of the first programmable read-only memory means to a storage medium;

means for storing all of the reconstituted compressed data from the output side of said second programmable read-only memory means but only one occurrence of the corresponding gain factor applied at the first input of said second programmable read-only memory means for the compressed data for said predetermined time period on the storage medium.

4,301,334
TELECOMMUNICATION SUBSCRIBER LINE ACCESS CIRCUIT WITH GROUND KEY AND INSULATION FAULT INDICATION

Robert Lechner, Otterfing, Fed. Rep. of Germany, assignor to Siemens Aktiengesellschaft, Berlin and Munich, Fed. Rep. of Germany

Filed Mar. 6, 1980, Ser. No. 127,569

Claims priority, application Fed. Rep. of Germany, Mar. 23, 1979, 2911517

Int. Cl.³ H04G *1/36*

U.S. Cl. 179—16 AA **3 Claims**

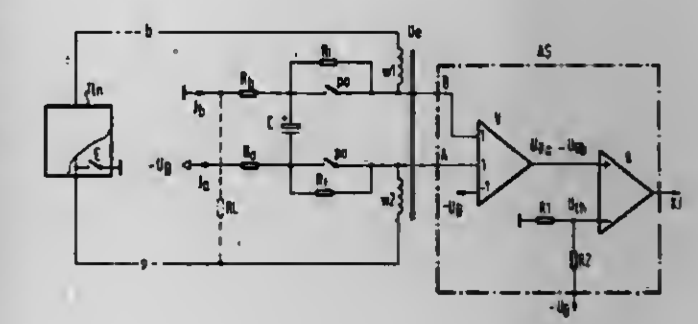

1. A telecommunications subscriber line access circuit for coupling a two wire subscriber station to a four wire interface to a system, said circuit comprising:

(a) a two-to-four wire hybrid transformer;

(b) a power supply bridge connected to the two wire side of said transformer for providing a potential difference across the two wires of said subscriber station, said power supply bridge including:

(1) a first resistor connected between ground and a first winding of said transformer on the two wire side;

(2) a second resistor connected between a source of potential and the second winding of said transformer on the two wire side; and

(3) a capacitor connected between said first and second resistors on the sides thereof which are connected to said first and second windings;

(c) an evaluating circuit connected to said first and second winding for producing an indicating signal upon ground key actuation of said subscriber; and

(d) a cutoff circuit arranged in the power supply bridge, in series with at least one of said first resistor and said second resistor, said cutoff circuit including:

(1) a cutoff switch which is opened, with a delay, upon ground key actuation and closed upon termination of ground key actuation; and

(2) a third resistor bridging said cutoff switch and having a sufficiently high resistance value that, with the cutoff switch open, the residual current flowing through it due to ground key actuation does not damage the circuit components lying in the affected portion of the access circuit and having a sufficiently low resistance value that the current flowing through it, without ground key actuation and due to a leakage current between the wires of the subscriber line in excess of the permitted limit value, causes the evaluating circuit to respond in the same manner as with a closed cutoff switch and simultaneous ground key actuation.

4,301,335
VISUAL TELEPHONE OR OTHER ANNUCIATOR RINGING INDICATOR

Jules Jucker, deceased, late of Zürich, Switzerland; by Hedwig A. Jucker-Raths, heir; by Edith H. Benz-Jucker, heir, both of Züich, Switzerland; by Erich J. Jucker, heir, Herrliberg, Switzerland, and by Christina U. Uhlemann-Jucker, heir, Reinach, Switzerland, assignors to Reichle & De Massari, Uster, Switzerland

Continuation-in-part of Ser. No. 850,342, Nov. 10, 1977, abandoned. This application Jul. 4, 1979, Ser. No. 72,479
Claims priority, application Switzerland, Apr. 29, 1977, 5397/77
Int. Cl.[3] **H04M** *1/00*
U.S. Cl. 179—84 L **10 Claims**

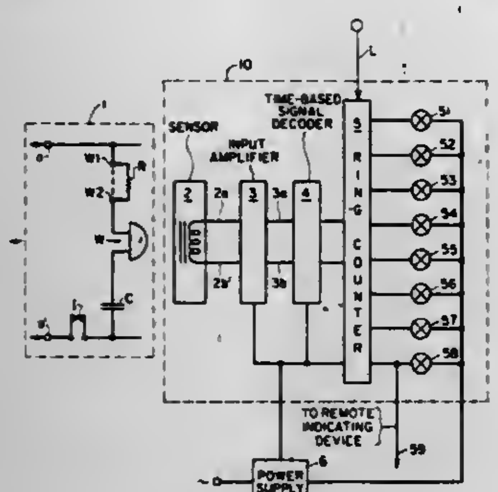

1. For combination with a telephone having a ringing circuit (a, W1, W2, W, C, a') including a bell (W),

a visual telephone ringing indicator generating a visible display in response to cyclical operation of the telephone bell, while rejecting electrical signals arising in said ringing circuit not destined for cyclical operation of said bell, comprising

a time-based decoding circuit (4) coupled to the ringing circuit for determining if the cyclical energization of the bell corresponds to a predetermined time-based ON-OFF relationship representative only of telephone ringing signals and, only if said correspondence is established, providing an enabling output signal;

a ring counter (5) providing sequential output pulses enabled by the enabling output signal from said time-based decoding circuit;

optical indicating means (51-58) coupled to the output pulses of the ring counter for sequentially providing an optical indication upon enabling of the ring counter;

and power supply means (6) for powering the time-based decoding circuit (4) and the ring counter (5) and providing output power matched to the number of optical indicating means enabled at any one time by said ring counter.

4,301,336
HYBRID CIRCUIT

Frank Mütting, Berlin, Fed. Rep. of Germany, assignor to Deutsche Telephonwerke und Kabelindustrie Aktiengesellschaft, Berlin, Fed. Rep. of Germany

Continuation of Ser. No. 770,376, Feb. 22, 1977, abandoned. This application Apr. 16, 1979, Ser. No. 30,170
Claims priority, application Fed. Rep. of Germany, Feb. 20, 1976, 2607480
Int. Cl.[3] **H04B** *1/58*
U.S. Cl. 179—170 NC **3 Claims**

1. Hybrid circuit for a transition between two-wire and four-wire lines comprising an assembly of two monolithic integrated differential amplifiers serving as first and second operational amplifiers each having an inverted input and a non-inverted input and an output, a preceding voltage divider connected to each of the inverted inputs and respectively forming part of a feedback path for each of said operational amplifiers, bibirectional terminal means for connecting the two-wire side to the non-inverted input of said first amplifier and receive terminal means for connecting the four-wire side to the non-inverted input of said second amplifier, whereby audio voltage may be fed to said non-inverted inputs, the voltage dividers, respectively, having resistances of equal value to avoid a voltage gain, transmit terminal means for connecting the four-wire side to the output of said first amplifier, first and second matching impedances respectively connected to said receive terminal means and said transmit terminal means, a balancing impedance for the characteristic impedance of the two-wire side directly connected between the non-inverted input of said first amplifier and a common connection between said output of said second amplifier and the preceding voltage divider which is connected to the inverted input of the first amplifier, the magnitude of said matching

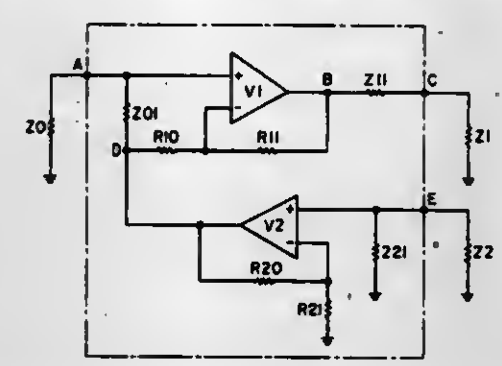

impedances and the magnitude of the balancing impedance for the characteristic impedance of the two-wire side with respect to any given input impedances of the hybrid circuit being chosen so that, for an incoming transmission, half of the output voltage of said second amplifier is present at said non-inverted input of said first amplifier and, for an outgoing transmission, twice the input voltage to said first amplifier is present at said output thereof, so that transmission loss in the hybrid circuit is zero in both directions, said first amplifier being operable for effecting phase reversal of the voltage at the output of said second amplifier, the non-inverted input of said second amplifier having fed to it an a-c voltage fed to the hybrid circuit from the four-wire side so as to obtain a high isolation or attenuation for the hybrid circuit, said receive terminal means and said transmit terminal means, respectively, being connected through the respective first and second matching impedances to the non-inverted input of said second amplifier and to the output of said first amplifier, whereby an unbalanced hybrid circuit is formed.

4,301,337
DUAL LATERAL SWITCH DEVICE

Franklin N. Eventoff, 2351 Lake View Ave., Los Angeles, Calif. 90039

Filed Mar. 31, 1980, Ser. No. 135,386
Int. Cl.[3] **H01H** *13/70;* **G10H** *1/00*
U.S. Cl. 200—5 A **12 Claims**

1. A dual switch apparatus defining two independent switches simultaneously actuated in response to a single transverse force comprising:

a first support member;

a first conductor disposed on the first support member;

a second connector disposed on the first support member;

a second support member;

a third conductor disposed on the second support member;

a fourth conductor disposed on the second support member;

the first and second support members juxtaposed opposite one another in normally spaced apart relationship with the first and third conductors and the second and fourth conductors laterally spaced in simultaneous actuating proximity, the first and third conductors transversely movable into electrical conducting relationship and the second and fourth conductors transversely movable into electrical conducting relationship in response to application of the single transverse force, the first and third conductors defining a first switch and the second and fourth conductors defining a second switch; and

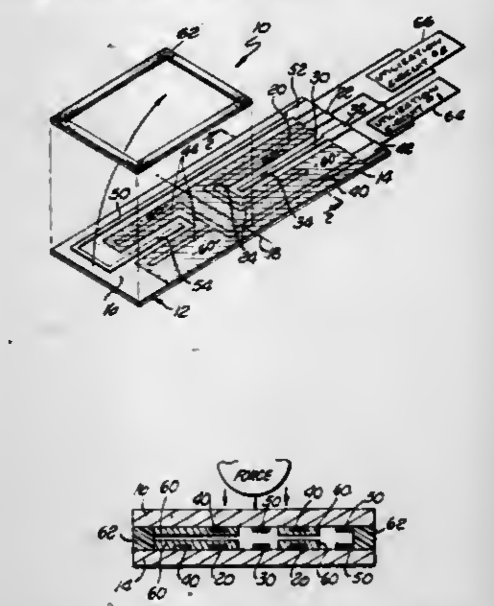

a pressure responsive semiconducting composition disposed for providing a contact resistance across at least one of the first and second switches, the contact resistance varying in response to variations in the magnitude of the single transverse force.

4,301,338
CONTACT-SENSING PROBE

David R. McMurtry, Wotton-under-Edge, England, assignor to Rolls-Royce Limited, London and Renishaw Electrical Ltd., Gloucestershire, both of, England

Continuation of Ser. No. 727,616, Sep. 28, 1976, abandoned, which is a continuation-in-part of Ser. No. 550,634, Feb. 18, 1975, abandoned, which is a continuation of Ser. No. 398,831, Sep. 19, 1973, abandoned. This application Apr. 18, 1979, Ser. No. 31,150
Claims priority, application United Kingdom, Oct. 4, 1975, 40718/75
Int. Cl.[3] **H01H** *3/00;* **G01B** *5/00*
U.S. Cl. 200—61.41 **7 Claims**

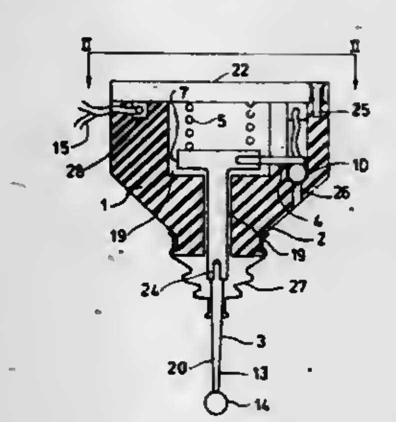

1. A device for mounting a stylus in a position-determining apparatus wherein said device and an object are movable relative to each other for providing a signal when said stylus engages said object, thereby indicating the position thereof, said device comprising

a fixed member,

a movable member supportable on said fixed member at two locations spaced apart along a first axis,

the movable and fixed members respectively defining at each said location a supported element confronting a supporting element in the direction of a second axis transverse to said first axis,

at each said location one of the supported and supporting elements having surface means convergent in a direction of said second axis and the other one of said elements being engageable with said surfaces,

bias means for urging the movable member into contact with said fixed member, all of said convergent surface means thereby positively defining a rest position for said movable member and said movable member being removed from said rest position in opposition to said bias means when a force is applied to said stylus and said bias means and convergent surface means cooperating on cessation of said force, to return said movable member to said rest position,

a single proximity sensor having a fixed and a movable element having a gap therebetween and having an output corresponding to the magnitude of said gap,

said fixed and movable element being situated on the fixed and movable member respectively in positions intermediate between said locations,

said supporting elements of the fixed member and said fixed element of the sensor being situated at the same side of said movable member,

whereby any said movement of the movable member away from said rest position results in increasing said gap and correspondingly produces a change in said sensor output.

4,301,339
ELECTRICAL BRIDGE ATTACHED TO HIGH CURRENT SWITCH

Peder R. Solheim, and Oddmund Wallevik, both of Porsgrunn, Norway, assignors to Norsk Hydro a.s., Oslo, Norway

Filed Jan. 24, 1979, Ser. No. 6,452
Claims priority, application Norway, Feb. 1, 1978, 78/0347
Int. Cl.[3] **H01H** *33/12*
U.S. Cl. 200—146 R **8 Claims**

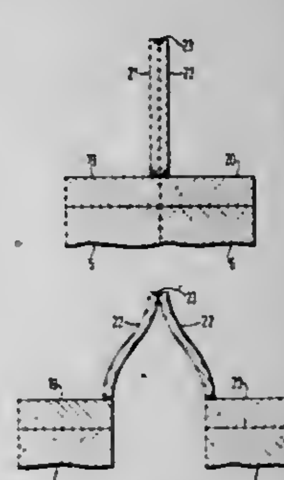

1. A high current switch for use in connecting and disconnecting an electrolytic cell in a series connected system of plural electrolytic cells without interrupting current to the remainder of the cells of the system, said switch comprising:

a first contact plate having a contact surface;

a second contact plate having a contact surface;

means for moving one of said first and second contact plates between a closed position whereat said contact surfaces are in contact and an open position whereat said contact surfaces are separated; and

flexible secondary conductor means, connected to said first and second contact plates, for forming a secondary electrical connection between said first and second contact plates during movement thereof to said open position, and for thereby preventing arcing between said contact surfaces, said secondary conductor means being positioned such that movement of said contact plates to said open position mechanically deforms said secondary conductor means, said secondary conductor means having a cross-sectional size sufficiently smaller than the size of said contact surfaces such that said secondary conductor

means becomes ruptured with movement of said contact plates to said open position.

4,301,340

ELECTRICAL SWITCHGEAR

John Parry, Blackwood, United Kingdom, assignor to South Wales Switchgear Limited, Blackwood, United Kingdom

Filed Nov. 20, 1979, Ser. No. 96,069

Claims priority, application United Kingdom, Nov. 28, 1978, 46357/78

Int. Cl.³ H01H *33/18*

U.S. Cl. 200—147 R **7 Claims**

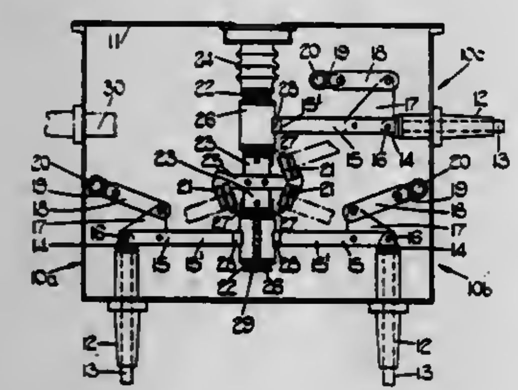

1. Electrical switchgear comprising:
(a) a housing containing an electrically insulating fluid;
(b) a pair of switches disposed in said housing, each said switch including first contact means and second contact means which are relatively movable between a closed position in which said first and second contact means are mutually engaged and an open position in which said first and second contact means are mutually separated, movement of said first and second contact means out of said closed position and towards said open position causing an electrical arc discharge to be drawn therebetween;
(c) electrically conductive arcing electrode means disposed in said housing and to which said electrical arc discharge is transferred from said second contact means upon further movement of said first and second contact means of each said switch towards said open position; and
(d) a field coil which is common to both said switches and which is electrically connected to said arcing electrode means, an arcing current flowing through said field coil when said electrical arc discharge is transferred to said arcing electrode means from either of said switches and producing a magnetic field which causes said electrical arc discharge to rotate between said first contact means and said arcing electrode means and to become extinguished.

4,301,341

ELECTRICAL SWITCHGEAR

John Parry, Blackwood, England, assignor to South Wales Switchgear Limited, Gwent, England

Filed Nov. 21, 1979, Ser. No. 96,417

Int. Cl.³ H01H *33/18*

U.S. Cl. 200—147 R **24 Claims**

1. Electrical switchgear comprising:
(a) a housing containing an electrically insulating fluid;
(b) an electrically conductive arcing electrode disposed in said housing;
(c) a switch disposed in said housing and including first contact means and second contact means which are relatively movable between a closed position in which said first and second contact means are mutually engaged and an open position in which said first and second contact means are mutually separated, movement of said first and second contact means out of said closed position and towards said open position causing an electrical arc discharge to be formed between said first contact means and said arcing electrode, and;
(d) a field coil having an axis and electrically connected in series with said arcing electrode, an arcing current flowing through said field coil when said electrical arc discharge is formed between said first contact means and said arcing electrode and producing a magnetic field which causes said electrical arc discharge to rotate between said

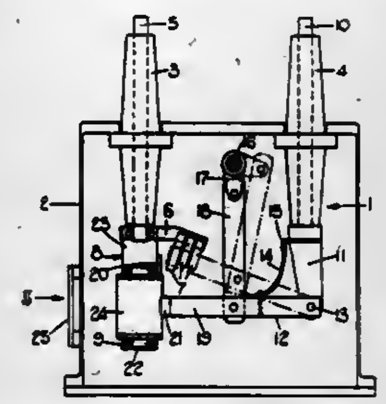

first contact means and said arcing electrode and become extinguished;
(e) said first contact means including an electrically conductive contact arm which is pivotable about a pivot axis transverse to said field coil axis, said contact arm having an end portion which moves transversely to and inwardly of said field coil axis on movement of said first and second contact means away from said closed position and towards said open position.

4,301,342

CIRCUIT BREAKER CONDITION INDICATOR APPARATUS

Roger N. Castonguay, Terryville, and Charles L. Jencks, Avon, both of Conn., assignors to General Electric Company, New York, N.Y.

Filed Jun. 23, 1980, Ser. No. 162,282

Int. Cl.³ H01H *9/20, 73/12*

U.S. Cl. 200—153 SC **1 Claim**

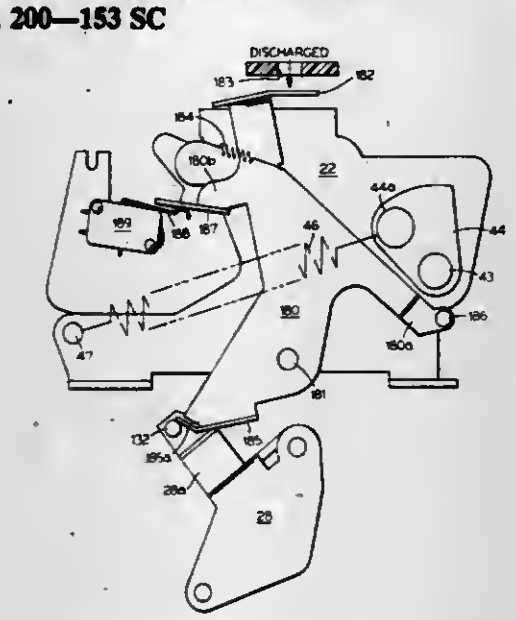

1. Condition indicator apparatus for a circuit breaker having a spring-powered operating mechanism for motivating breaker movable contacts between tripped open and closed positions, and a spring-powered charging mechanism operatively coupled with the operating mechanism, the charging mechanism capable of being charged, storing such charge, and subsequently discharging to charge the operating mechanism, and hook means selectively operable to hold the breaker movable contacts in an intermediate hooked open position against the force of the charged operating mechanism acting to propel the movable contacts to their closed position, said apparatus comprising, in combination:
A. a first indicator arm mounted for movement between an ON indicating position, assumed in response to the movable contacts being in their closed position, and an OFF indicating position, assumed in response to the movable contacts being in either their tripped open or hooked open positions,
B. a first display panel carried by said first arm and bearing indicia separately registerable in a window in the circuit breaker cover in accordance with the position of said first arm to locally indicate whether the breaker contacts are open or closed;
C. a second indicator arm mounted for movement between an uncharged indicating position, assumed in response to the movable contacts being in their tripped open position, and a charged indicating position, assumed in response to either the movable contacts being in their hooked open position or the charging mechanism having a charge stored therein; and
D. a second display panel carried by said second indicator arm and bearing indicia separately registerable in a breaker cover window in accordance with the position of said second arm to locally indicate whether or not the breaker is capable of either closure while the contacts are open or reclosure while the breaker contacts are closed.

4,301,343

METHODS AND ASSEMBLIES FOR MOUNTING PARTS

John A. Jonelis, Indianapolis, Ind., assignor to Western Electric Company, Incorporated, New York, N.Y.

Filed Jun. 20, 1980, Ser. No. 161,635

Int. Cl.³ H01H *1/26*; B23K *19/04*; B29C *27/08*

U.S. Cl. 200—283 **33 Claims**

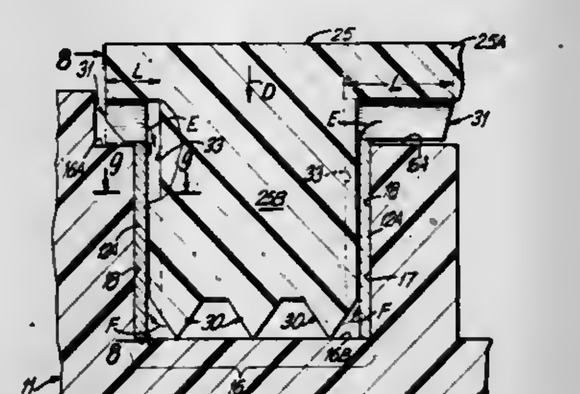

1. An improved method of mounting a section of an elongated piece part between a base member and a thermoplastic insert member having a mounting portion designed to fit into a cavity in the base member so as to position the mounting section of the piece part between the mounting portion of the insert member and a wall of the cavity, the insert member being subsequently welded to the base member, the improved method comprising:
ultrasonically melting portions of the insert member adjacent to the base member, while simultaneously forcing the members together so that portions of the molten plastic flow into at least one slot formed in one of the members adjacent to the mounting section of the piece part to encapsulate the mounting section between the members in flowed plastic, wherein the insert member is formed with pointed, thermoplastic energy directors along portions of the inner surface facing flat adjacent surfaces of the base members, at least portions of the directors being positioned adjacent to an end of each slot so that molten plastic from the directors flows into each slot during the melting step.

21. An assembly comprising:
(a) a base member having a vertical cavity;
(b) an elongated flat contact spring having a mounting section positioned on edge in the cavity against a flat vertical wall thereof and having an end portion extending outward from the cavity; and
(c) a thermoplastic insert member welded to the base member and having a depending finger portion fitting in the cavity with a flat outer surface of the finger portion located in close proximity to the inner edge of the spring mounting section in the cavity so that the mounting section of the spring is sandwiched between the flat vertical wall of the cavity in the base member and the flat outer surface of the depending finger portion, the flat outer surface of the finger portion having at least one open-ended vertical slot facing the spring mounting section and filled with a sufficient volume of melted plastic to encapsulate the mounting section of the spring in the melted plastic so as to securely lock the mounting section of the spring between the insert member and the base member so that the end portion of the spring extends outward from the cavity.

4,301,344

ILLUMINATED PUSHBUTTON SWITCH

Takahiro Sakakino, and Norio Iwakiri, both of Nagaokakyo, Japan, assignors to Omron Tateisi Electronics Co., Kyoto, Japan

Filed Nov. 21, 1979, Ser. No. 96,397

Claims priority, application Japan, Dec. 9, 1978, 53-152859

Int. Cl.³ H01N *9/02*; H01H *9/16*

U.S. Cl. 200—314 **4 Claims**

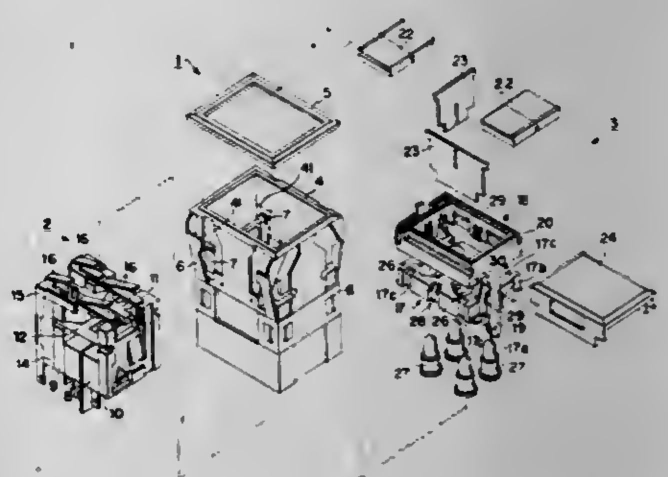

1. In an illuminated pushbutton switch comprising a housing, a switching component installed in a lower portion of the housing and having a reset spring, and an illuminator component having a lamp holder and a pushbutton which is removably installed in the housing, said pushbutton being vertically slidable within said lamp holder for relative movement over a predetermined stroke and having a lever for actuating the switching component,
the improvement comprising
a leaf spring secured at its base end to one of said lamp holder and pushbutton and disposed in a direction substantially parallel with said predetermined stroke,
an engaging means formed in the other one of said lamp holder and pushbutton for engaging with a free end of said leaf spring, and
a stationary member for transversely biasing said leaf spring out of engagement with said engaging means as said reset spring returns to its original position after said pushbutton is installed in said housing, wherein the length of said leaf spring is selected so as to prevent the motion of said pushbutton into a position which actuates said switching component while said pushbutton is being installed in the housing.

4,301,345

KEY SWITCH ACTUATION BY TORSION SPRING

Justin Balta, N. Miami Beach, Fla., assignor to Burroughs Corporation, Hollywood, Fla.

Filed Feb. 26, 1980, Ser. No. 124,945

Int. Cl.³ H01H *9/00, 13/52*

U.S. Cl. 200—314 **8 Claims**

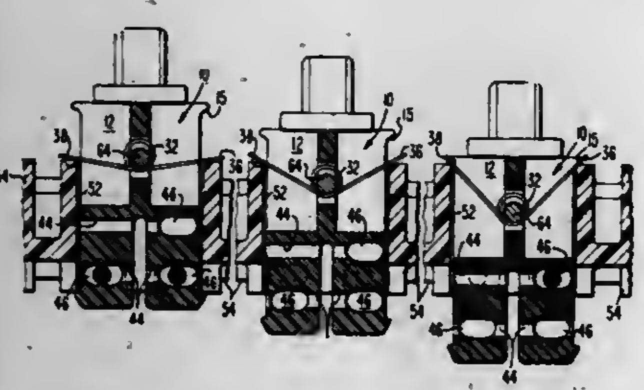

1. A photo-optical switching apparatus wherein a light blocking and unblocking element is movable from a light unobstructing position to a light obstructing position within a supporting assembly such as a keyboard, comprising:

an irregularly shaped slidably movable member centrally bifurcated so as to provide oppositely disposed parallel portions the latter being capable of slight compressive deformation toward and away from each other when said member is slidably disposed within a keyboard,

a central flat portion terminating at its upper extremity in oppositely disposed abutments acting to retain said irregularly shaped member within an operably associated keyboard,

the lower opposite edge portions of said irregularly shaped member terminating in parallel ledges acting to prevent accidental removal of said member after mounting within said keyboard,

oppositely disposed pairs of parallel grooves extending from side to side of said irregularly shaped member,

torsion spring mounting means projecting from said central flat portion,

a torsion spring mounted on said mounting means, the opposite ends of said spring engaging the horizontal edges of said central flat portion effectively biasing said torsion spring to a desired tension, and

optical passageways extending orthogonally through said grooves permitting light to pass through said passageways or be blocked from passage therethrough depending upon the relative position of said irregularly shaped member with respect to the keyboard with which it is operably associated.

4,301,346

CIRCUIT BREAKER TRIP LATCH ASSEMBLY

Roger N. Castonguay, Terryville, and Charles L. Jencks, Avon, both of Conn., assignors to General Electric Company, New York, N.Y.

Filed Jan. 23, 1980, Ser. No. 162,281

Int. Cl.³ H01H *9/20, 73/12*

U.S. Cl. 200—320 **10 Claims**

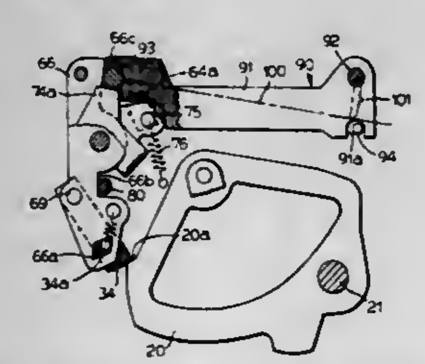

1. A trip latch assembly for releaseably latching the cradle of a circuit breaker operating mechanism in a reset position, said trip latch assembly including, in combination:

A. an elongated primary latch pivotally mounted intermediate its ends;

B. a primary latch element pivotally mounted to said primary latch adjacent one end thereof;

C. a latch spring biasing said latch element to a latching position engageable with a cradle latching shoulder to sustain the cradle in its reset position against the force of a charged breaker operating mechanism spring exerting a moment on said primary latch;

D. a first secondary latch pivotally mounted for movement to a latching position in response to opening of the breaker and to an unlatching position in response to closure of the breaker;

E. a second secondary latch pivotally mounted for movement between latching and unlatching positions;

F. an elongated intermediate latch pivotally mounted adjacent one end;

G. an intermediate latch element mounted adjacent the other end of said intermediate latch in a position of common engagement with the other end of said primary latch and either said first secondary latch in its latching position while the breaker is open or said second secondary latch in its latching position while the breaker is closed, the geometry of the engagements of said primary and secondary latches with said intermediate latch element, coupled with the elongation of said intermediate latch, being effective in significantly attenuating the force of the charged breaker operating mechanism spring ultimately absorbed by said secondary latches,

(1) whereby, upon movement of said second secondary latch to its unlatching position in disengaged relation with said intermediate latch element, said primary latch is freed to pivot from a latching position to an unlatching position where said primary latch element is swung away from engaging relation with the cradle shoulder and the cradle is propelled to its tripped position as the operating mechanism spring discharges to open the breaker.

4,301,347

FEED SYSTEM FOR MICROWAVE OVEN

John P. Quine, Colonie, N.Y., assignor to General Electric Company, Schenectady, N.Y.

Filed Aug. 14, 1980, Ser. No. 177,989

Int. Cl.³ H05B *6/74*

U.S. Cl. 219—10.55 F **17 Claims**

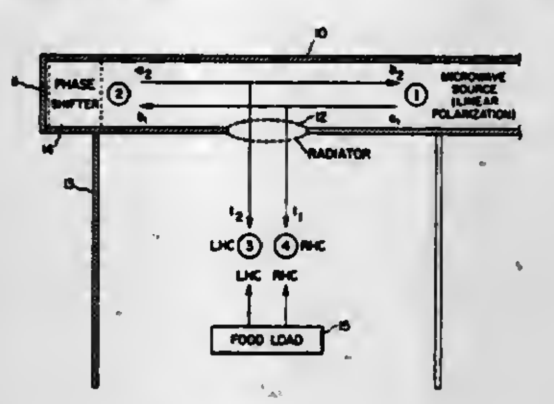

1. In a microwave oven having a source of linearly polarized electromagnetic waves, an oven cavity, and a feed system for radiating microwave energy into said oven cavity, the improvement wherein said feed system comprises:

a rectangular waveguide structure coupled to said source;

a circular polarizing radiator formed in said waveguide structure which possesses directional characteristics such that the radiated energy has right-hand and left-hand circular polarization; and

variable phase shifter means for changing the phase of one of said polarizations, interference of both polarizations in said oven cavity resulting in rotating elliptically polarized waves and therefore improved heating uniformity.

4,301,348

PROCESS FOR PRODUCING LARGE-SIZED RECTANGULAR OR SQUARE STEEL PIPES

Hiromu Nakazima, Itami, Japan, assignor to Kabushikikaisha Nakazima, Osaka, Japan

Filed Nov. 13, 1979, Ser. No. 93,336

Claims priority, application Japan, Nov. 17, 1978, 53-142681; Feb. 21, 1979, 54-19985

Int. Cl.³ B23K *31/06*

U.S. Cl. 219—61.2 **6 Claims**

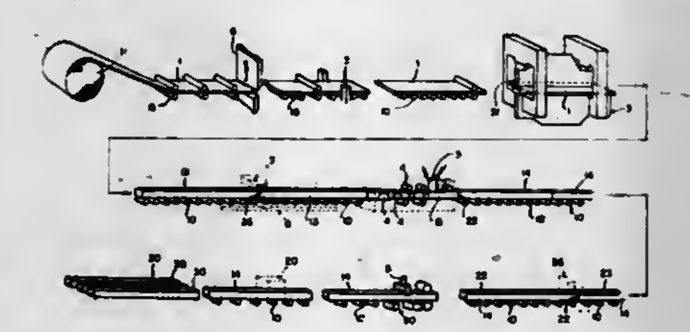

1. A process for producing large-sized steel pipes of rectangular or square configuration from steel plate comprising:

continuously paying off steel from a roll of same;

cutting the paid-off steel into predetermined lengths to thereby form a plurality of steel plates;

bending said steel plates to form a longitudinally extending base, opposed sidewalls angularly disposed relative to said base at respective angles greater than 90°, and a top wall constituted by inwardly directed extensions of said sidewalls which terminate in spaced apart longitudinally extending edges;

arranging said bent steel plates in series in a longitudinal direction so that the rear longitudinal end of one steel plate is in abutment with the front longitudinal end of the next steel plate;

tack welding at least a part of said abutting ends of said bent steel plates to form an elongated tack-welded plate;

positioning a plurality of outer rollers having at least one horizontal lower roll, two side rolls and one horizontal upper roll, said rolls being positioned externally of said elongated tack-welded plate and in contact respectively with said base, said sidewalls and said top wall;

effecting relative longitudinal movement between said elongated tack-welded plate and said outer rollers to thereby bend said sidewalls normal to said base and to press said longitudinally extending edges of said top wall into substantially abutting relationship and thereby form an elongated abutment extending longitudinally along said elongated tack-welded plate;

welding said elongated abutment continuously such that the welding proceeds continuously along said elongated tack-welded plate from one tack-welded steel plate to the next successive tack-welded steel plate; and

cutting said elongated tack-welded steel pipe at said tack-welded parts thereof to thereby provide a plurality of predetermined lengths of rectangular or square steel pipes.

4,301,349

ELECTRICAL MACHINING APPARATUS FOR FORMING A THREE-DIMENSIONAL SURFACE CONTOUR IN A WORKPIECE

Kiyoshi Inoue, Tokyo, Japan, assignor to Inoue-Japax Research Incorporated, Yokohama, Japan

Filed Oct. 3, 1979, Ser. No. 81,352

Claims priority, application Japan, Oct. 6, 1978, 53-123280; Dec. 14, 1978, 53-155569; Jun. 13, 1979, 54-75084

Int. Cl.³ B23P *1/12*

U.S. Cl. 219—69 W **8 Claims**

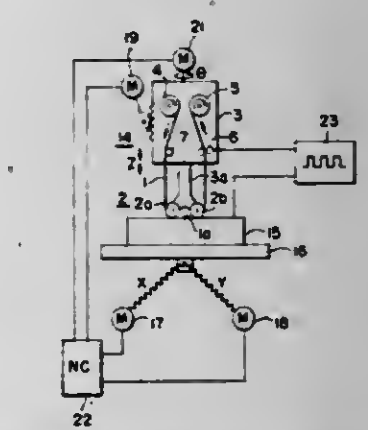

1. An electrical machining apparatus for forming a three-dimensional surface contour in a workpiece, comprising:

a continuous elongate electrode;

electrode advancing means for axially advancing said electrode from a supply means to a takeup means;

a workpiece support for carrying said workpiece;

electrode guide means carried by a tool head and formed with an arcuate wire-reception groove having an electrically nonconductive wire-guiding surface for guiding said axially advancing electrode under tension so that a portion of said electrode guided on said electrically nonconductive wire-guiding surface is exposed from said wire-reception groove and positioned in a machining relationship with a portion of said workpiece;

power supply means for electrically energizing said electrode and said workpiece to electroerosively remove material from said portion of said workpiece;

and machining feed means for relatively displacing tool head and said workpiece support so as to cause said electrode advanced over said guide means to sweep in a scanning manner over a predetermined machining path to form said three-dimensional surface contour therein.

4,301,350

PRESETTER

Misao Fujikawa, Yokohama, Japan, assignor to Sodick Co., Ltd., Yokohama, Japan

Filed Jan. 9, 1980, Ser. No. 110,576

Claims priority, application Japan, Feb. 6, 1979, 54-13359[U]

Int. Cl.³ B23K *1/12*

U.S. Cl. 219—69 R **4 Claims**

1. Apparatus for positioning an object to be adjusted in a desired angle, comprising:

a base table;

means for articularly supporting said object;

a head portion on which said supporting means is removably mounted in a predetermined positional relationship, said head portion being mounted on said base table;

at least one pair of regulating blocks having regulating faces respectively for positioning said object in a desired angle by holding said object therebetween;

means for supporting and guiding said one pair of regulating

blocks so as to be translatable on said base table in a predetermined direction; and,

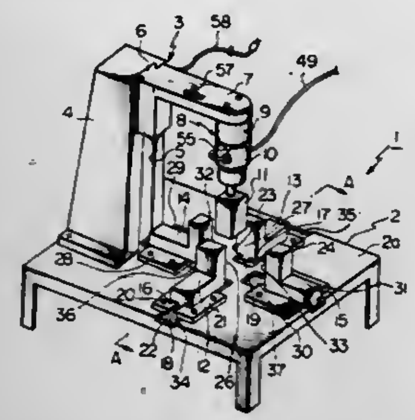

means for adjusting a space between said regulating faces, said adjusting means being connected to said one pair of regulating blocks for simultaneously moving said blocks.

4,301,351
MODULAR MICROPROCESSOR-CONTROLLED CONTROLLER FOR RESISTANCE FOR RESISTANCE WELDING MACHINES
James K. Mathews, Van Nuys, Calif., assignor to Pertron Controls Corporation, Van Nuys, Calif.
Filed Apr. 13, 1979, Ser. No. 29,752
Int. Cl.³ B23K *11/24*
U.S. Cl. 219—114 **3 Claims**

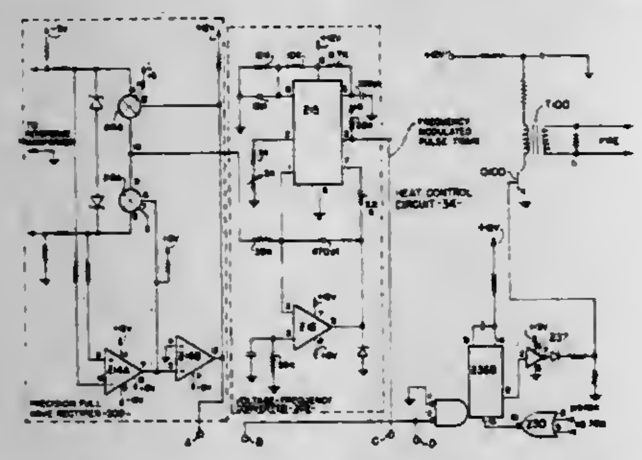

1. A heat control system for controlling a resistance type welding machine, or the like, comprising: a full-wave rectifier circuit connected to an alternating current reference line voltage source to produce a full-wave rectified unfiltered output; voltage-to-frequency converter connected to the full-wave rectifier circuit to produce a train of pulses frequency modulated by the output of the full-wave rectifier circuit; integrated circuit means including programmable counter means connected to said converter for delivering phase angle power control to the welding machine in the presence of line voltage variations and noise disturbances, said programmable counter means including first counter means connected to said voltage-to-frequency converter and responsive to the frequency modulated pulses therefrom for performing a digital integration for each half cycle of the reference line voltage, said first counter means including a first counter for performing a digital integration of the first half of each half cycle of the reference line voltage and a second counter for performing a digital integration of the second half of each half cycle of the reference line voltage and a third counter for producing a firing signal to the welding machine each time the third counter reaches a predetermined count and a fourth counter for initiating the count in the, third counter; means for establishing said predetermined count in said third counter; circuit means for maintaining the output of the fourth counter phase locked with the reference voltage; and control means responsive to the sum of the counts of the first and second counters for each half cycle of the reference line voltage for controlling the predetermined count in said third counter at which the firing signal is produced.

4,301,352
DEVICE FOR SURFACE FUSION TREATMENT OF ARTIFICIAL STONE PRODUCTS
Andrei K. Shipai, ulitsa Karbysheva, 7, kv. 157; Anatoly I. Zolotovsky, ulitsa Kalinovskogo, 33, kv. 16; Vladislav G. Moskovsky, ulitsa Sedykh, 58, kv. 30; Nikolai N. Naumenko, ulitsa Miroshnichenko, 9, kv. 391; Vladimir D. Shimanovich, Leninsky prospekt, 91, kv. 149, and Leonid I. Kiselevsky, ulitsa Kulmana, 15, kv. 178, all of Minsk, U.S.S.R.
Filed Oct. 15, 1979, Ser. No. 84,725
Int. Cl.³ B23K *9/00*
U.S. Cl. 219—121 PR **16 Claims**

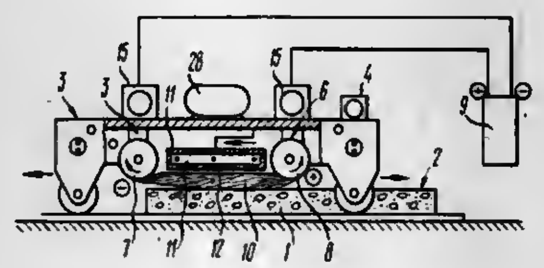

1. A device for surface fusion treatment of artificial stone products, comprising:
anode and cathode assemblies of a plasma generator mounted separately and creating an arc discharge along the plane of a surface to be treated, an anode and a cathode of said anode and said cathode assemblies each being made as a round rod and arranged parallel to each other, the arc discharge being created in a direction normal to the axes of said anode and said cathode;
bearings supporting said anode and said cathode assemblies, and in which the ends of said anode and cathode are axially fixed;
drives rotating said anode and said cathode about their axes in opposite directions as viewed from the working zone side;
a screen made as a hermetically sealed chamber, shaped as an elongated body whose width slightly exceeds the diameter of said arc discharge, and having a gas-permeable bottom to supply a plasma gas therethrough from the interior of said chamber, said screen being arranged between said anode and said cathode at right angles to the axes of said anode and said cathode so that said bottom of said screen is facing said working zone;
guides supporting said screen and disposed parallel to the axes of said anode and said cathode; and
a drive effecting reciprocating displacement of said screen, thereby providing displacement of said arc discharge along the axes of said anode and said cathode.

4,301,353
METHOD FOR PRODUCING MAGNETIC HEAD
Masahide Suenaga, Odawara; Noboru Shimizu, Tokorozawa; Mitsuhiro Kudo, Tokyo; Hiroshi Yamaguchi, Fujisawa, and Masao Mitani, Yokohama, all of Japan, assignors to Hitachi, Ltd., Tokyo, Japan
Filed Feb. 28, 1980, Ser. No. 125,702
Claims priority, application Japan, Mar. 5, 1979, 54-24501
Int. Cl.³ B23K *27/00*
U.S. Cl. 219—121 LJ **5 Claims**

1. A method for producing a magnetic head comprising the steps of irradiating peripheral parts other than a track portion of a magnetic head core with a laser beam so as to selectively remove a portion of the surface of the irradiated parts, thereby to form said track portion including passing said laser beam through a slit having a predetermined pattern to shape said beam and then focusing the shaped beam onto said magnetic

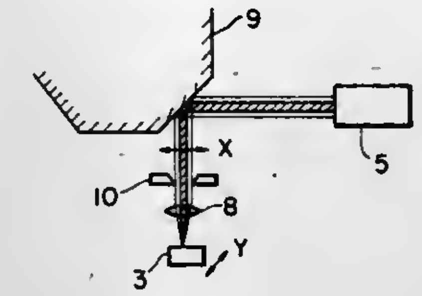

head core to thereby irradiate said peripheral parts with said laser beam.

4,301,354
METHOD OF MAKING FOIL TERMINATION FOR A CAPACITOR
Ronald L. Williams, Hawthorne, Calif., assignor to Hughes Aircraft Company, Culver City, Calif.
Filed Mar. 18, 1980, Ser. No. 131,311
Int. Cl.³ H01G *13/00*
U.S. Cl. 219—121 ED **3 Claims**

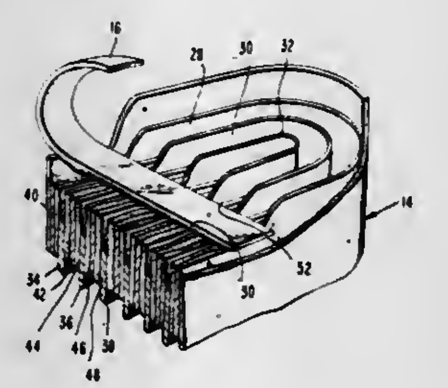

1. The method of making a foil would capacitor comprising the steps of:
winding a first aluminum foil sheet, a second aluminum foil sheet and first and second insulator sheets into a wound body so that the first aluminum foil sheet forms upper aluminum foil winding layers which extend out of the top of the body, the second aluminum foil sheet forms lower aluminum foil winding layers which extend out of the bottom of the body and the insulator layers lie between the upper and lower aluminum foil layers to electrically separate the upper and lower aluminum foil layers;
crushing an upper aluminum connector strap into the upper aluminum foil winding layers;
electron beam welding in the absence of flux the upper aluminum connector strap to the upper crushed aluminum foil layers where they extend out of the top of the body so that the welded joint is free of contamination and flux;
crushing a lower aluminum connector strap into the lower aluminum foil winding layers;
electron beam welding in the absence of flux the lower aluminum connector strap to the lower crushed aluminum foil layers where they extend out of the bottom of the body so that the welded joint is free of contamination and flux.

4,301,355
GAS METAL ARC WELDING SYSTEM
Andrew G. Kimbrough, Simi; Ronald R. Rothermel, Valencia, and Donald P. Viri, Simi, all of Calif., assignors to Dimetrics, Inc., Sepulveda, Calif.
Filed Aug. 4, 1980, Ser. No. 175,357
Int. Cl.³ B23K *9/09*
U.S. Cl. 219—137 PS **18 Claims**

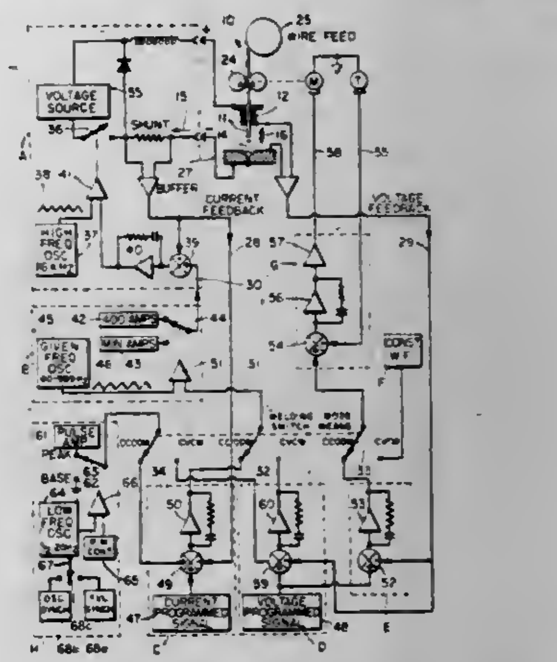

1. A method for maximizing weld arc stability, puddle control and deposition rate on a work especially in but not limited to out-of-position welding for a given power level and given feed wire electrode material of given diameter, including the steps of:
(a) passing power from a constant current rapid response power supply to the feed wire electrode;
(b) providing a current feedback signal corresponding to the value of the current at the welding arc;
(c) providing a voltage feedback signal corresponding to the value of the voltage at the welding arc;
(d) providing a current reference control signal at a given frequency and given amplitude to modulate the power to provide a current varying between a relatively high output current of the power supply and relatively low output current;
(e) providing a pulse width modulator control signal corresponding to the amplified difference between said current feedback signal and a current programmed signal;
(f) controlling the pulse width of said current reference control signal with said pulse width modulator control signal to provide a constant current control mode of the power supply; and
(g) controlling the rate of feed of said feed wire material in accordance with a signal corresponding to the amplitude difference between said voltage feedback signal and a voltage programmed signal.

4,301,356
HEATING UNIT AND METHOD FOR PRODUCTION THEREOF
Tadayoshi Tanei, Nagaokakyo; Minoru Miyamoto, Kusatsu, and Akio Ohno, Osaka, all of Japan, assignors to Sekisui Kagaku Kogyo Kabushiki Kaisha, Osaka, Japan
Filed Mar. 7, 1979, Ser. No. 18,323
Claims priority, application Japan, Mar. 9, 1978, 53-27329; Aug. 4, 1978, 53-95545
Int. Cl.³ H05B *1/00*
U.S. Cl. 219—213 **7 Claims**

1. A heating unit capable of generating heat upon passing of an electric current therethrough, said heating unit comprising a matrix of a hardened mortar, at least two electrodes set at both ends of the heating unit and electrically conductive car-

bon fibers dispersed in the matrix, said carbon fibers having lengths of 0.3 to 25 mm, diameters of not more than 50 microns and an electric resistivity of not more than 10^{-2} ohm-cm and being in an amount of 0.1 to 3 parts by weight per 100 parts by weight of the matrix.

4,301,357
ELECTRICALLY HEATED WAX SPATULA USING A DIODE AS THE HEATING ELEMENT
Ronald E. Huffman, Tucson, Ariz., assignor to KV33 Corporation, Tucson, Ariz.
Filed Aug. 23, 1979, Ser. No. 68,932
Int. Cl.³ H05B *1/00*; A61C *13/20*; B23K *3/04*
U.S. Cl. 219—229 3 Claims

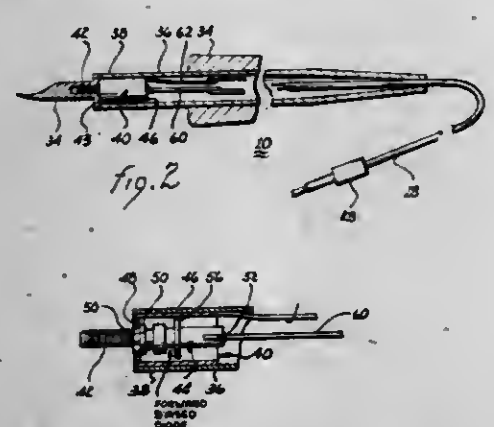

1. An electrically heated spatula for working temperature sensitive material, said spatula being connectable to a source of electrical power, said spatula comprising in combination:
(a) a handle, a hollow sleeve extending from said handle and secured thereto at one end;
(b) a diode unit supported within the other end of said sleeve, said diode unit comprising in combination:
i. a diode electrically adapted to be connected to the source of electrical power for generating heat in response to the received electrical power, said diode including a stud extending therefrom;
ii. apertured metallic plate means penetrably receiving said stud to effect a mounting for said diode; and
iii. a metallic cylinder affixed to said plate means and extending therefrom to shroud said diode in a non-contacting relationship to minimize heat transfer by conduction from said diode to other than said stud, said cylinder being mountable within said other end of said sleeve with said stud extending outwardly from the end of said sleeve, said plate means and said cylinder being electrically conductive, and electrically connected; and
iv. said diode including an anode terminal disposed interior of said cylinder;
v. said diode including a cathode terminal electrically connected to said stud;
(c) a tip for applying heat to the temperature sensitive material, said tip being removably mounted upon said stud for receiving heat from said diode through said stud; and
(d) first and second conductors extending from the source of electrical power, said first conductor being electrically connected to said anode terminal and said second conductor being electrically connected to said cylinder.

4,301,358
YARN HEATING DEVICE
Jean Venot, Roanne, France, assignor to ASA S.A., Roanne, France
Filed Jan. 19, 1979, Ser. No. 5,025
Claims priority, application France, Jan. 31, 1978, 78 02841
Int. Cl.³ H05B *1/00*
U.S. Cl. 219—388 9 Claims

1. A yarn heating device comprising in combination a plurality of elongate chambers to be heated internally by a vapourised heating fluid, a reservoir for heating fluid connected to one end of each said chambers, said reservoir comprising a horizontal pipeline which interconnects the chambers and at least one vertical pipe below and connected to said horizontal pipeline, heating means being provided to each said vertical pipe, a cylindrical collector for recovering vapours, a plurality of pipelines connecting the other ends of said chambers to said collector, said collector being above said chambers, and a

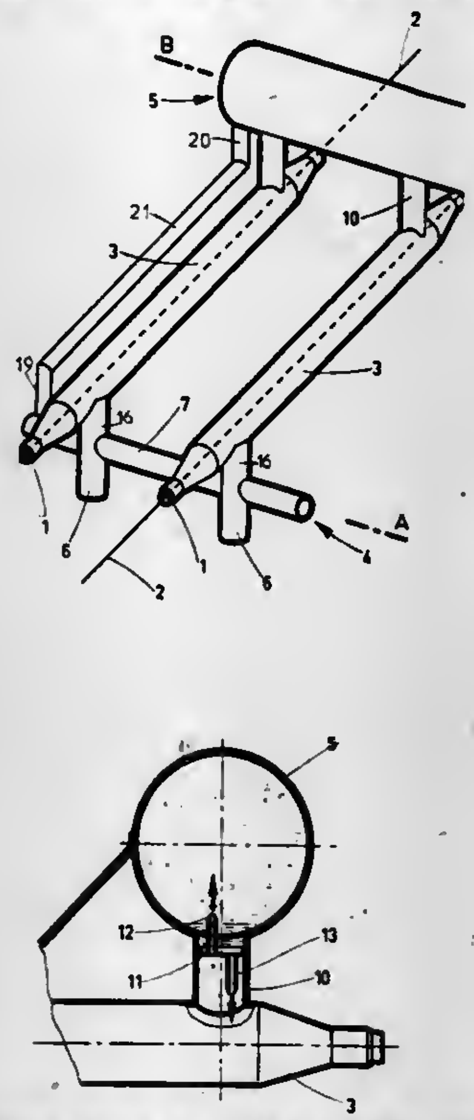

separator element having two orifices of smaller diameter than the diameter of the pipeline in each said pipeline at the upper end thereof near the collector, each separator element including respective channels extending in opposite directions from said two orifices, one said channel terminating inside the collector and the other terminating substantially at a connection between the pipeline and the associated chamber.

4,301,359
HEAT ROLLER TYPE FIXING APPARATUS FOR ELECTROPHOTOGRAPHIC COPYING MACHINE
Takashi Ito, Hachioji, and Nin-ichi Kamogawa, Tokyo, both of Japan, assignors to Konishiroku Photo Industry Co., Ltd., Tokyo, Japan
Filed Feb. 19, 1980, Ser. No. 122,465
Claims priority, application Japan, Feb. 24, 1979, 54-21099
Int. Cl.³ G03G *5/00*; H05B *1/02*
U.S. Cl. 219—469 3 Claims

1. A heat roller type fixing apparatus for electrophotographic copying machine comprising: a heat roller containing a heating element, the heating element having a heating characteristic such that, when said heating element is energized, the surface of the heat roller exhibits a minimum low temperature area at its longitudinally central portion and a maximum high temperature areas on both sides of the minimum low temperature area; and spaced longitudinally therefrom a press roller which presses against and rotates with the heat roller; a temperature sensing element for detecting the surface temperature of the heat roller; a control circuit which controls the operation of the heating-element in response to the output from the temperature sensing element, the improvement comprising that said temperature sensing element is located midway be-

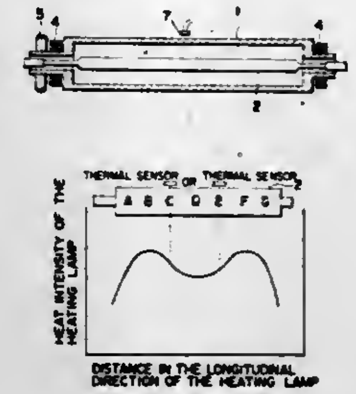

tween said minimum low temperature area and one of said maximum high temperature areas.

4,301,360
TIME INTERVAL METER
Bruce W. Blair, Beaverton, Oreg., assignor to Tektronix, Inc., Beaverton, Oreg.
Filed Oct. 25, 1979, Ser. No. 88,261
Int. Cl.³ G07C *1/02*
U.S. Cl. 235—92 T 9 Claims

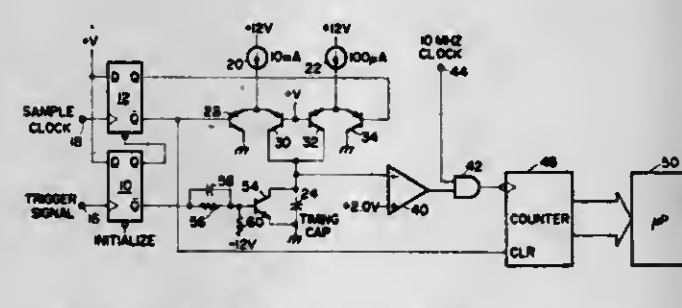

1. A time interval meter, comprising:
a timing circuit operable at first and second predetermined rates within a predetermined timing window, said second rate being proportionately slower than said first rate;
control circuit means responsive to a start signal and a stop signal for causing said timing circuit to operate at said first predetermined rate over a first time interval determined by the time difference between said start and stop signals, and for causing said timing circuit to operate at said second predetermined rate over a second time interval determined by the time difference between said stop signal and the upper limit of said predetermined timing window;
means connected to said timing circuit for measuring said second time interval to provide a measured value; and
means for subtracting said measured value from said predetermined timing window to provide a measurement of said first time interval.

4,301,361
DOCUMENT HANDLING DEVICE PROVIDING CHANNELS FOR DOCUMENTS OF TWO WIDTHS
Robert Lees, Newark, Del., assignor to Antotote, Ltd., Newark, Del.
Filed May 30, 1980, Ser. No. 154,939
Int. Cl.³ G06K *13/06*
U.S. Cl. 235—484 6 Claims

1. In a document handling device wherein position of the document is sensitive and at least two widths of document must be handled, the improvement comprising:
a conveyor channel having upper and lower walls and lateral walls defining means at fixed width to align documents of a first width fitting snugly within the lateral walls;
at least one movable divider wall means extending through one of the upper or lower walls and into contact with the other, over a distance large in comparison to channel thickness and having a channel defining wall surface spaced from a lateral wall defining means in order to accept and align narrower documents of a second width fitting snugly therebetween, said divider wall having a tapering leading edge in the direction of document movement over the wall providing a decreasing space between the wall with which it is in contact away from the document insertion end of the channel,

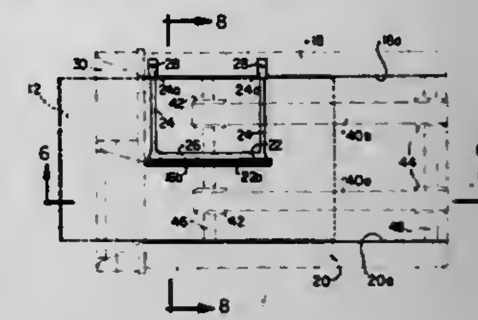

resilient means urging the movable divider wall into the wall with which it makes contact and yielding to documents passing over the leading tapered edge of the movable wall; and
conveyor means to engage a document inserted into the channel and pull the document through the channel while maintaining position of the document relative to at least one lateral wall defining the channel.

4,301,362
LIGHT ACTIVATED SOLID STATE SWITCH
Gerard Mourou, Rochester, N.Y., assignor to University of Rochester, Rochester, N.Y.
Filed Nov. 21, 1979, Ser. No. 96,711
Int. Cl.³ H01J *40/14*
U.S. Cl. 250—211 J 21 Claims

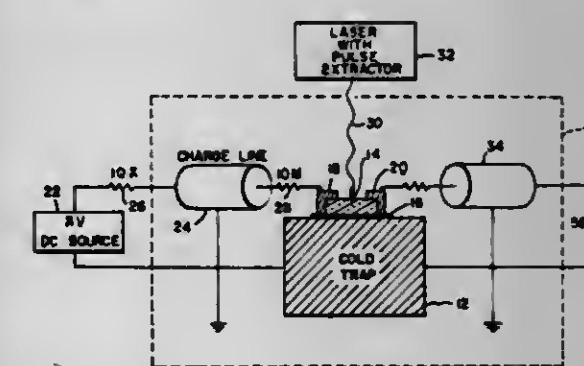

1. A light activated solid device for switching high voltages, including multi kilovolt level voltages, which comprises a body of semiconductor material having a pair of electrodes separated by a gap upon which light is incident when said device is activated, cryogenic means for cooling said body, and said body having a certain concentration of deep-lying charge carrier having centers therein sufficient to maintain the resistivity of said body in the presence of said high voltages and absence of said light.

4,301,363
ALIGNMENT DEVICE
Akiyoshi Suzuki, Tokyo; Ryozo Hiraga, and Hideki Yoshinari, both of Yokohama, all of Japan, assignors to Canon Kabushiki Kaisha, Tokyo, Japan
Filed Aug. 30, 1979, Ser. No. 70,986
Claims priority, application Japan, Sep. 1, 1978, 53-107880
Int. Cl.³ G01N *21/86*
U.S. Cl. 250—216 **4 Claims**

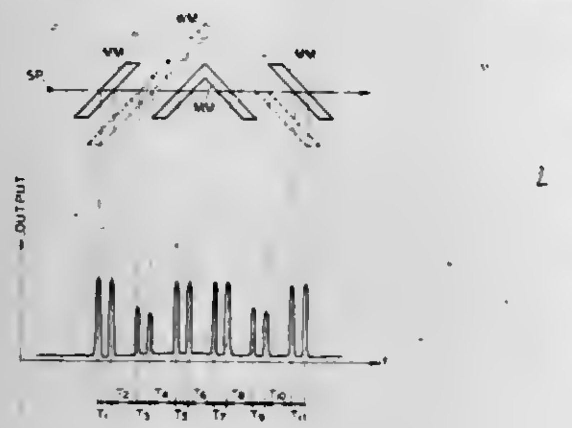

1. An alignment device, comprising:
(a) a mask supporting member to support a mask;
(b) a wafer supporting member to support a wafer;
(c) a moving and adjusting mechanism to move at least one of said mask and wafer;
(d) a photoelectric detector which scans said mask and wafer with a scanning unit of a predetermined magnitude along a linear scanning line, and which reads alignment marks on said mask and wafer in a dark field;
(e) a mask supported on said mask supporting member;
(f) a wafer supported on said wafer supporting member, and having an alignment mark the size of which in the scanning direction is twice or more as large as the size of said scanning unit in the scanning direction; and
(g) operational circuit means which operates an output signal from said photoelectric detector, and actuates said moving and adjusting mechanism when said mask and wafer are not in a predetermined relationship.

4,301,364
X-RAY DIFFRACTOMETER WITH HIGH TIME RESOLUTION
Herbert Goebel, Munich, Fed. Rep. of Germany, assignor to Siemens Aktiengesellschaft, Berlin & Munich, Fed. Rep. of Germany
Filed Feb. 21, 1980, Ser. No. 123,347
Claims priority, application Fed. Rep. of Germany, Mar. 1, 1979, 2907948
Int. Cl.³ G01B *15/06;* **G01N** *23/207*
U.S. Cl. 250—272 **4 Claims**

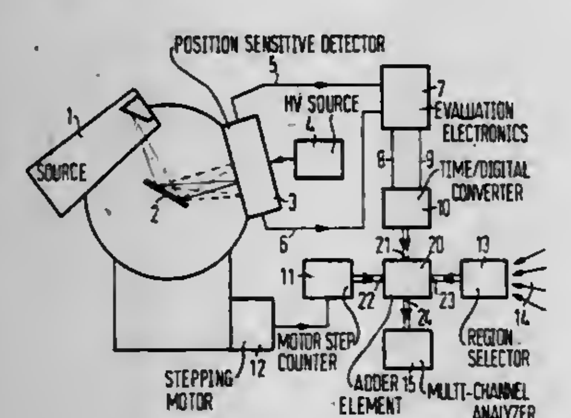

4. An x-ray diffractometer, comprising: a position-sensitive detector means moved about a sample by a drive means, the detector means providing output signals triggered by x-ray quanta; electronic evaluation means for converting the output signals into a time duration signal corresponding to a position of a particular x-ray quantum in the detector means; a time-to-digital converter means connected to the evaluation means for converting the time duration to a digital signal; a digital adder means having a first input connected to an output of the time-digital converter means and a second input connected to receive a digital value generated by the drive means which corresponds with a position of the detector means; a multichannel analyzer means driven by the adder means and having a plurality of regions for analyzing various desired measurement applications; and a digital region selector means having its output signal connected to a third input of the digital adder means, the selector means selecting a region from the plurality of regions within the analyzer means corresponding to a desired diffractometer measurement application.

4,301,365
APPARATUS FOR CONTACTLESS MEASUREMENT OF THE THICKNESS OF A SHEET MATERIAL
Leonid A. Basin, ulitsa Valikhanova, 6, kv. 2; Alexei A. Valkov, ulitsa Rudneva, 199; Vladimir I. Panin, ulitsa Saina, 6, kv. 162, and Vladimir I. Terekhin, ulitsa M. Toreza, 43, kv. 62, all of Alma-Ata, U.S.S.R.
Filed Sep. 24, 1979, Ser. No. 78,663
Int. Cl.³ G01N *23/00*
U.S. Cl. 250—308 **3 Claims**

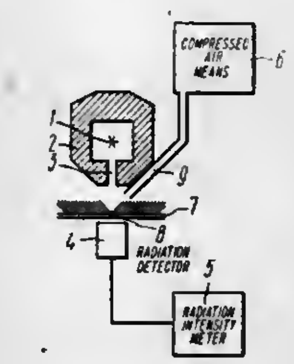

1. Apparatus for contactless measurement of the thickness of sheet material comprising: a radioactive source; a protective container having a cavity accommodating said radioactive source; a collimating hole in said protective container through which a beam of radiation is directed; a radiation detector, said radiation detector having a receiving hole arranged in axial relation to said beam of radiation in opposed relationship to said collimating hole; a radiation intensity meter having an input electrically coupled to an output of said radiation detector; and compressed air means for directing a jet of compressed air substantially in the direction of said beam to an area where said radiation beam intersects said sheet material during the measurement of the thickness thereof such that said compressed air jet impinges on said sheet material in the area where said radiation beam intersects said sheet material.

4,301,366
CHATTER DETECTION IN THICKNESS MEASURING GAUGES AND THE LIKE
Michale C. Bertin, Irvine, Calif., and Mark A. Carson, Stow, Ohio, assignors to Nucleonic Data Systems, Irvine, Calif.
Filed Jun. 6, 1980, Ser. No. 157,076
Int. Cl.³ G01N *23/00*
U.S. Cl. 250—308 **17 Claims**

1. An apparatus for measuring thickness variations in a strip of material moving relative to a gauging station, including in combination:
a radioactive source positioned at said gauging station for directing radiation to said strip of material;
a radiation detector positioned at said gauging station for receiving radiation from said source transmitted or reflected by said strip;

first circuit means having the output of said detector as an input for producing a first electrical signal varying as a function of thickness along said strip, said first signal including a lower frequency component, a higher frequency cyclical component, and a higher frequency noise component;
a thickness measuring circuit having said first signal as an input and including low pass filter means for substantially removing said higher frequency components of said first signal, and calibration means for providing a second signal as an output varying as a function of said lower frequency component of said first signal;
a chatter detection circuit having said first signal as an input and including;
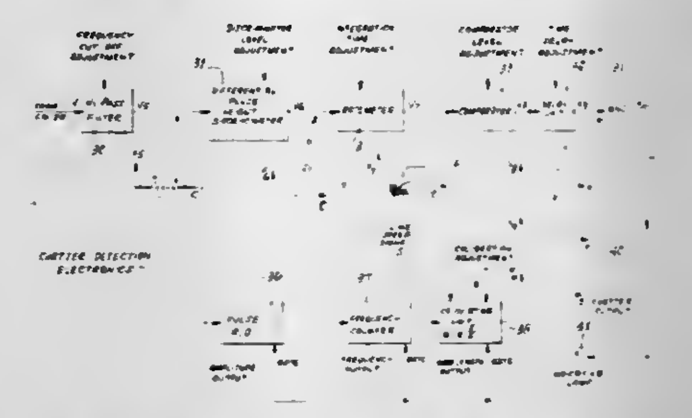
high pass filter means for substantially removing said lower frequency component of said first signal,
second circuit means having the output of said high pass filter means as an input for providing a third signal varying as a function of frequency of said higher frequency cyclical component,
a delay unit having said third signal as an input providing a delayed third signal as an output, and
a chatter indicating unit having said third and delayed third signals as inputs and providing an output indicating presence of chatter in said strip when there is coincidence in time of said third and delayed third signals.

4,301,367
RADIATION DOSIMETER
Sam S. Hsu, 77 Elmwood Rd., Wellesley, Mass. 02181
Filed Jan. 21, 1980, Ser. No. 114,062
Int. Cl.³ G01T *1/22;* **G08B** *17/12*
U.S. Cl. 250—370 **2 Claims**

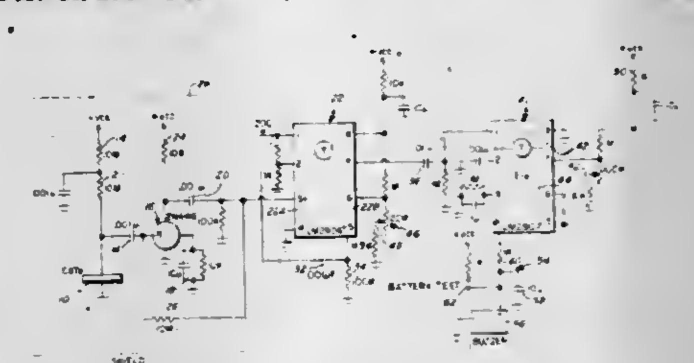

1. A solid-state radiation dosimeter comprising;
a solid-state crystal having the property of generating electrical pulse signals proportional to particle dosage,
a resistor network coupled to said solid-state crystal for biasing the crystal,
transistor amplifier means,
means coupling the crystal signal to the transistor amplifier means,
first amplifier means coupled from said transistor amplifier means,
second amplifier means having a signal input and reference input,
a resistor circuit setting the reference input,
conductor means coupling the output of the first amplifier means to the signal input of the second amplifier means,
frequency to voltage converter means comprising a charge section and a comparator section,
said comparator section having a signal input and reference input,
an adjustable resistor circuit setting the reference at an adjustable triggering threshold,
conductor means coupling the output of the charging section to the signal input of the comparator section,
and means responsive to said comparator means for providing an alarm,
said adjustable resistor circuit for determining the frequency or number of pulses at which alarm occurs.

4,301,368
IONIZING RADIATION DETECTOR ADAPTED FOR USE WITH TOMOGRAPHY SYSTEMS
Esko Riihimäki, Espoo, Finland, assignor to Hospital Physics Oy, Finland
Filed Jan. 31, 1980, Ser. No. 117,050
Int. Cl.³ H01J *39/28*
U.S. Cl. 250—385 **9 Claims**

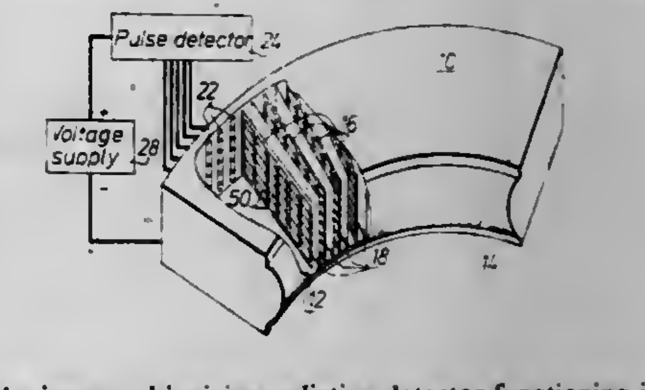

1. An improved ionizing radiation detector functioning in a proportional chamber mode, for use with x-ray tomography systems, comprising an elongated housing enclosing a chamber, a high-pressure gas of great atomic weight and substantially opaque to x-radiation in said chamber, anodes and cathodes mounted in said chamber enclosed in the gas, voltage supply means for supplying a positive voltage to said anodes and a negative voltage to said cathodes, said housing having a side window of a material substantially transparent to x-radiation for passing the x-radiation into said chamber, said cathodes comprising a plurality of plate cathodes spaced at intervals along the elongated axis of said housing at right angles thereto, substantially parallel to the beam direction of radiation to be detected, each of said anodes comprising a frame and a plurality of metal wires extending parallel to the beam direction at spaced intervals within a substantially common plane on said frame for supporting said wires, each of said anodes being located midway between two adjacent cathodes thereby forming a voltage pulse after each absorbed x-ray quantum, and means for separately detecting the voltage pulse on each anode wire.

4,301,369
SEMICONDUCTOR ION EMITTER FOR MASS SPECTROMETRY
Takekiyo Matsuo, Toyonaka; Itsuo Katakuse, Minoo, and Hisashi Matsuda, Takarazuka, all of Japan, assignors to The President of Osaka University, Osaka, Japan
Filed Feb. 13, 1979, Ser. No. 11,863
Claims priority, application Japan, Aug. 12, 1978, 53/98574
Int. Cl.³ H01J *27/00*
U.S. Cl. 250—423 R **10 Claims**

1. Ion emitter for mass spectrometry comprising a wire

having a diameter of approximately 60 μm and having a conductive metal peripheral surface, and a multiplicity of whiskers

of semiconductor material projecting from said conductive metal peripheral surface of said wire.

4,301,370
FLOWTHROUGH CHAMBER FOR NUCLEAR RADIATION DETECTION FLUIDS
Peter Bauer, Munich, Fed. Rep. of Germany, assignor to Hartmann & Braun AG, Heiligenhaus, Fed. Rep. of Germany
Filed Jul. 24, 1978, Ser. No. 927,402
Claims priority, application Fed. Rep. of Germany, Jul. 18, 1977, 2732448
Int. Cl.³ G01N *21/01*
U.S. Cl. 250—435 6 Claims

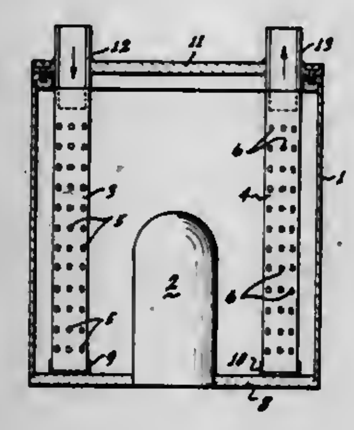

1. Measuring chamber of the flow-through type for fluids which may contain isotopes to be detected by way of radiation detection, comprising:
a cylindrical vessel having a bottom and a top;
an inlet tube connected to the top in eccentric relation to the cylindrical configuration of the vessel;
an outlet tube also connected to the top and in eccentric relation to the cylindrical configuration of the vessel;
said tubes being closed at their respective bottom ends and each being provided with a plurality of bores respectively as outlets and discharge openings into and from the interior of the vessel such that pressurized fluid under a steady-state condition will flow from said inlet tube to said outlet tube; and
a radiation detector disposed in the vessel between the tubes.

4,301,371
HOLDING DEVICE FOR ELECTRON-MICROSCOPE SPECIMENS
Claude Lieb, Bad Ragaz, Switzerland, assignor to Balzers Aktiengesellschaft, Liechtenstein
Filed Apr. 3, 1980, Ser. No. 136,770
Claims priority, application Switzerland, Apr. 12, 1979, 3500/79
Int. Cl.³ G01M *21/00*
U.S. Cl. 250—443 7 Claims

1. A holding device for electron-microscope specimens comprising a guide bar, means for controlling the temperature of said guide bar, a supporting block associated with said guide bar, support means on said supporting block for supporting a specimen thereon, and means for moving said supporting block and said guide bar relatively to press said supporting block into pressure interengagement with said guide bar to provide a thermal contact therebetween and to permit them to move

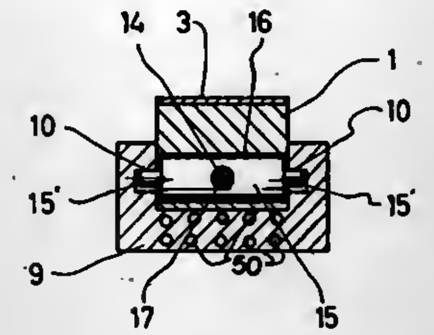

relatively apart so as to release the pressure interengagement so that one may be disassociated from the other.

4,301,372
PORTABLE FLUORESCENCE INSTRUMENT
Linda P. Giering, Harvard, and John T. Browarigg, Carlisle, both of Mass., assignors to Baird Corporation, Bedford, Mass.
Filed May 12, 1980, Ser. No. 148,795
Int. Cl.³ G01N *21/64;* G01J *3/30*
U.S. Cl. 250—461 R 12 Claims

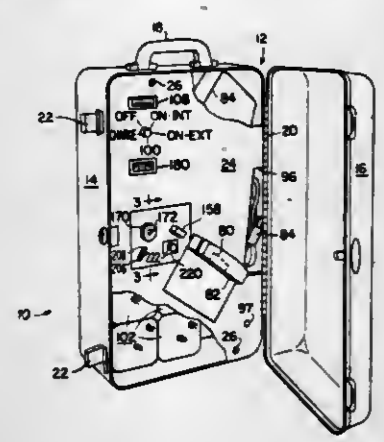

1. A portable fluorescence instrument contained within a casing and comprising:
(a) a source for generating radiation in a first path;
(b) a sample chamber to present samples into said first path;
(c) a shutter disposed in said first path between said source and said sample chamber;
(d) said samples, when excited by said radiation from said source, emitting fluorescent radiation in a second path;
(e) a grating having a focal plane off the Rowland circle and disposed in said second path for dispersing said fluorescent radiation;
(f) first means disposed in said second path between said sample chamber and said grating to modulate the intensity of said fluorescent radiation striking said grating; and
(g) second means disposed in said focal plane of said grating off said Rowland circle to record the modulated radiation dispersed by said grating.

4,301,373
SCANNING OF WORKPIECES SUCH AS LUMBER CANTS
Bo Sjödin, Jonköping, Sweden, assignor to Saab-Scania AB, Linköping, Sweden
Filed Jul. 5, 1979, Ser. No. 55,045
Claims priority, application Sweden, Jul. 10, 1978, 7807659
Int. Cl.³ G01N *21/30*
U.S. Cl. 250—560 20 Claims

1. A method of obtaining information about surface configuration of a workpiece with the use of a photoresponsive detector element which has an optical axis, has a response field limited to small angles of divergence from its optical axis, and produces an output having a magnitude dependent upon the

intensity of radiation that it detects in its response field, wherein said element is caused to scan across a workpiece in a direction substantially normal to its optical axis and while a pair of radiation sources that are spaced to opposite sides of said axis emit radiation towards the workpiece to be reflected from it for detection by the element, said method being characterized by:

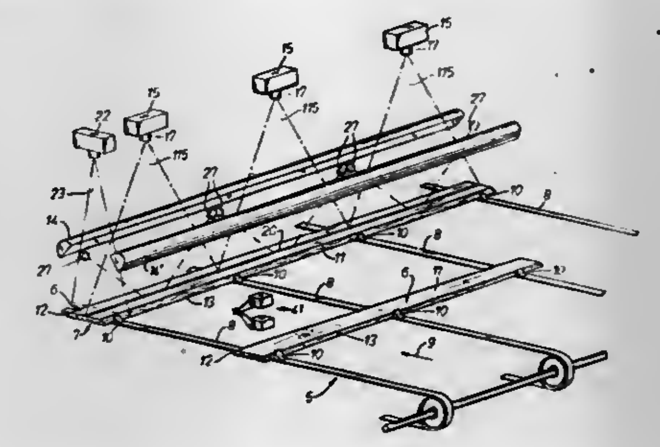

during each of a succession of measurement cycles that are of uniform and substantially short duration, exposing said element to radiation which is reflected thereto from substantially one and the same small surface area on the workpiece but which originates alternately from each of said radiation sources substantially to the exclusion of radiation originating from the other.

4,301,374
SHUTTER SYSTEM FOR OPTICAL MULTI-LENS SCANNER
Masakazu Hashiue, Saitama, Japan, assignor to Fuji Photo Film Co., Ltd., Minami-ashigara, Japan
Filed Nov. 16, 1979, Ser. No. 95,138
Int. Cl.³ G06K *7/10;* G11B *7/00*
U.S. Cl. 250—566 9 Claims

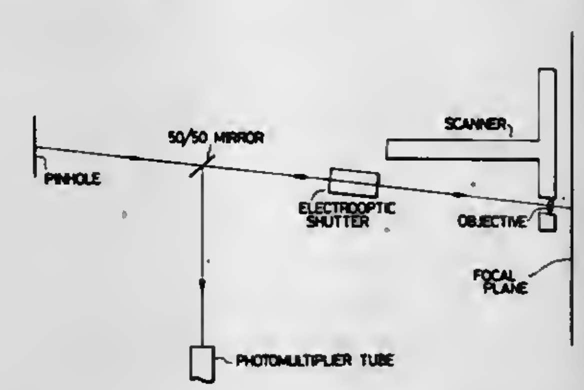

1. In an optical information storage system having a data record and a scanner moving relatively to each other, the data record having a data train thereon, a source of light optic means to direct said light from said source to said scanner, said scanner focusing said light on said data train to be modulated by said data train, and readout means for recovering said modulated light, the improvement comprising; shutter means to interrupt the transmission of light and control means to selectively actuate said shutter means in response to signals in said data train.

4,301,375
TURBO-GENERATOR UNIT AND SYSTEM
J. H. Anderson, York, Pa., assignor to Sea Solar Power, Inc., York, Pa.
Filed Jan. 2, 1980, Ser. No. 109,120
Int. Cl.³ F03G *7/04;* H02K *9/10*
U.S. Cl. 290—1 R 18 Claims

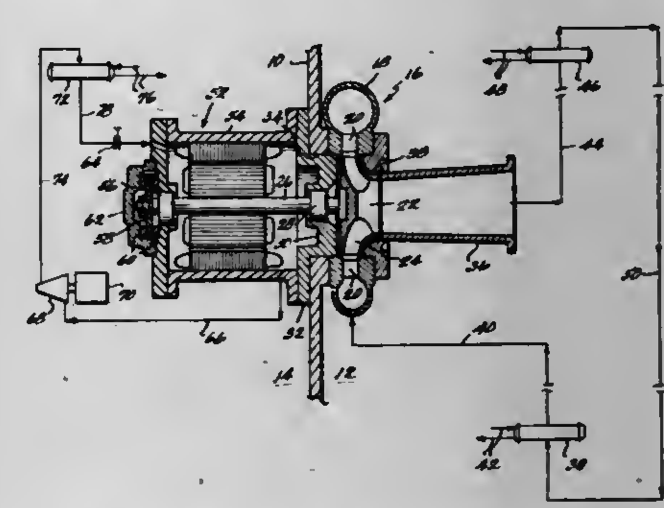

1. A turbo-generator unit for use in a sea thermal power plant having a wall separating the sea from an atmospheric space at a pressure lower than that of the sea at the depth at which said unit is located, comprising:
electrical generator means including housing means adapted to be located in the atmospheric space;
turbine means including a scroll and a wheel adapted to be located in the sea water;
a shaft common to said generator means and said turbine means;
two radial bearing means for said shaft, one between said generator means and said turbine means; and
supporting means for said one bearing means comprising a part of said housing means and adapted to be detachably mounted to the wall and to close and seal an opening therein larger than said wheel, whereby said generator means and said wheel can be installed in and removed from the atmospheric space as a unit.

4,301,376
INTERNAL COMBUSTION ENGINE AND D-C FLOATING BATTERY SELF-CONTAINED ELECTRICAL NETWORK COMBINATION, PARTICULARLY FOR THE ON-BOARD NETWORK OF AUTOMOTIVE VEHICLES
Istvan Ragaly, Schwieberdingen, Fed. Rep. of Germany, assignor to Robert Bosch GmbH, Stuttgart, Fed. Rep. of Germany
Filed Feb. 28, 1977, Ser. No. 773,055
Claims priority, application Fed. Rep. of Germany, Mar. 2, 1976, 2608606
Int. Cl.³ F02N *11/04*
U.S. Cl. 290—36 R 11 Claims

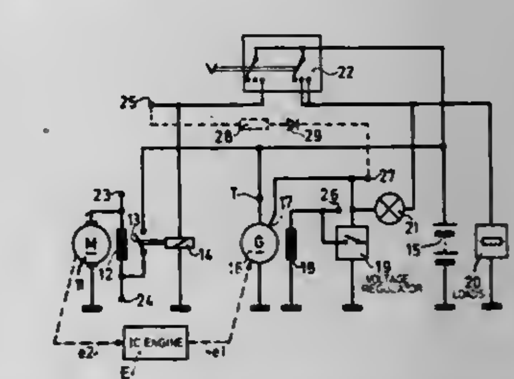

1. In an internal combustion engine and self-contained electrical network combination having

a generator (16) having an excitation field winding (18) driven by the internal combustion engine (E):
a battery (15) connected to the generator (16) and charged by current from the generator during operation of the engine;
a voltage regulator (19) connected to the generator, sensing output voltage therefrom and connected to control current through the field winding;
a starter motor system (11, 12, 13, 14) including a starter motor (11) and a driving connection (e2) to start the engine (E);
a starter switch (22) having an ON and an OFF position;
and a starter circuit including a series circuit of: the starter switch, the battery, the starter motor system, said series circuit, upon closing of the starter switch to ON position connecting the battery to the starter motor (11) to energize the starter motor and hence start the engine, and, after starting of the engine and upon opening of the starter switch to OFF position, to isolate the starter motor from the battery,
means directly energizing the field winding (18) upon starting of the engine, and effective only upon closing of the starter switch, comprising
direct connection means (28, 29) including a diode (29) connected to the series circuit at a junction (23, 24, 25) between the ON position of the starter switch (22) and the starter motor and to the field winding (18) of the generator,
the diode (29) being poled in a direction to pass current from the battery (15) to the field winding (18) of the generator during starting of the engine (E) and only while the starter switch is in the ON position,
said connection means being energized only upon closing of the starter switch to ON position (13, 14) for energization of the starter motor (11) thereby simultaneously, and only when said starter switch is closed, effecting a direct electrical connection from the battery (15) through the diode (29) to the field winding (18) of the generator (16) and applying power derived from the battery to the field winding during starting only and isolating said connection means from the battery upon release of the starter switch to OFF position, to provide for external excitation and hence rapid voltage build-up of the voltage of the generator while the engine is being driven by the energized starter.

4,301,377
MOVING SURFACE WATER DRIVEN POWER APPARATUS
Leon Rydz, 115 Webster Ave., Yonkers, N.Y. 10701
Filed Dec. 3, 1979, Ser. No. 99,872
Int. Cl.³ F03B *13/12*
U.S. Cl. 290—43 **22 Claims**

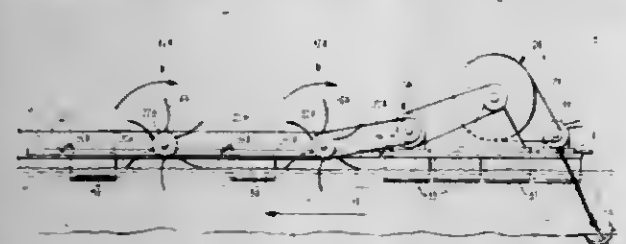

1. Apparatus for deriving power from the movement of water at the surface of a body of water comprising
a plurality of paddle wheels arranged in tandem and mutually parallel and to be positioned generally transverse to the direction of water movement,
each of said paddle wheels having a plurality of cylindrically curved blades,
a supporting means for supporting said paddle wheels for engagement by the lowermost blades with the water,
said supporting means including a plurality of floats operable to maintain the desired elevation of said paddle wheels by flotation of the entire apparatus,
said floats comprising discrete flotation tanks,
said supporting means comprising a plurality of separate support frames for said paddle wheels,
each of said support frames having discrete flotation tanks,
means for interconnecting said support frames to provide the tandem arrangement of said paddle wheels wherein said paddle wheels are arranged with substantially parallel axes,
the curvature of said blades being concave on the blade face to be engaged and pushed by the water,
and belt-like means mechanically coupling said paddle wheels together and coupling said paddle wheels to a power utilization device,
said separate support frames being interconnected by articulated interconnections to permit at least limited relative angular movement between adjacent frames at the interconnections while the paddle wheels on adjacent frames are interconnected by said belt-like means.

4,301,378
DUAL RATE BI-DIRECTIONAL SWITCH
Donald C. Cohlman, Hanover Park, and Daniel R. Schroeder, Glen Ellyn, both of Ill., assignors to Motorola, Inc., Schaumburg, Ill.
Filed Nov. 29, 1979, Ser. No. 98,424
Int. Cl.³ H01H *23/30*
U.S. Cl. 307—115 **11 Claims**

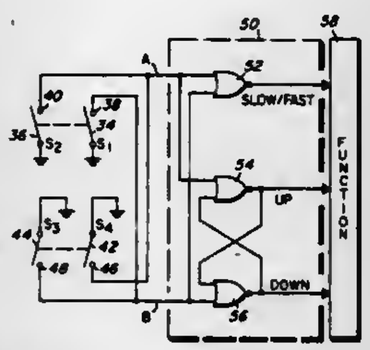

1. A dual rate bi-directional electrical switching system especially adapted to control a radio receiver function, comprising:
actuator means adapted for both rotation and translation in the same plane;
a plurality of electrical switches positioned adjacent to and capable of being selectively sequentially actuated by said actuator means, said plurality being separated into two groups of switches, at least one member of each group being actuatable by a corresponding rotation of said actuator;
conductor means comprising two conductors connected to said plurality of electrical switches; and
logic means connected to said conductor means, establishing logic control signals in response to selective sequential actuation of said plurality of electrical switches, whereby both the direction and rate of change of the function are controlled in response to the position of said actuator means.

4,301,379
LATCHING SCHMITT TRIGGER CIRCUIT
John R. Reinert, Colorado Springs, Colo., assignor to NCR Corporation, Dayton, Ohio
Filed Oct. 17, 1979, Ser. No. 85,827
Int. Cl.³ H03K *3/295*
U.S. Cl. 307—290 **8 Claims**

1. A latching Schmitt trigger circuit, comprising:
(a) first and second input terminals for unilaterally switching said latching Schmitt trigger circuit;
(b) first and second current carrying devices having first, second, and third electrodes, said first electrode being the control electrode and said second and third electrodes being the current carrying electrodes, said second electrode of said first current carrying device connected to said second electrode of said second current carrying device, and said third electrode of said first current carrying device connected to said first electrode of said second current carrying device;
(c) first, second, and third unilateral current flow devices having a current input terminal and a current output terminal,
said current output terminal of said first unilateral current flow device connected to said first input terminal, and said current input terminal of said first unilateral current flow device connected to said first electrode of said first current carrying device, said current input terminal of said second and third unilateral current flow devices connected together to form a single junction point, said current output terminal of said second unilateral current flow device connected to said first electrode of said first current carrying device, and
said current output terminal of said third unilateral current flow device connected to said third electrode of said second current carrying device;

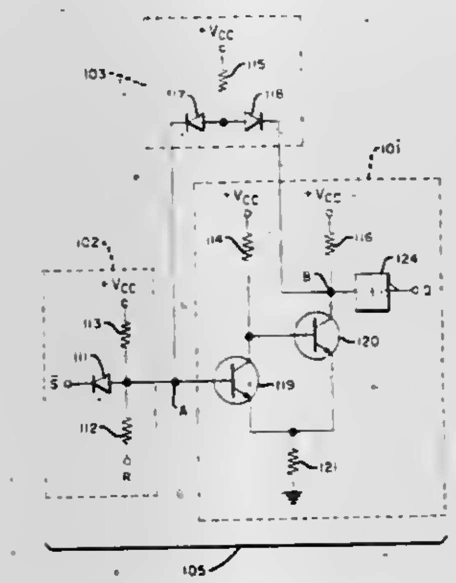

(d) first and second resistive elements, said first resistive element connected between said second input terminal and said first electrode of said first current carrying device, and said second resistive element connected between a power source and said first electrode of said first current carrying device;
(e) a third resistive element connected between said power source and said single junction point, said third resistive element, in combination with said first and second resistive elements, forming a voltage divider network for biasing of said first current carrying device;
(f) a fourth resistive element connected between a zero voltage potential level and the common connection of said second electrode of said first current carrying device and said second electrode of said second current carrying device, providing a feedback path for a regenerative action; and
(g) fifth and sixth resistive elements, said fifth and sixth resistive elements connected between said third electrodes of said first and second current carrying devices, respectively, and said power source, for current limiting said first and second current carrying devices.

4,301,380
VOLTAGE DETECTOR
James S. Thomas, Manor, Tex., assignor to Motorola, Inc., Schaumburg, Ill.
Filed May 1, 1979, Ser. No. 35,142
Int. Cl.³ H03K *5/153, 5/24, 17/693*
U.S. Cl. 307—362 **13 Claims**

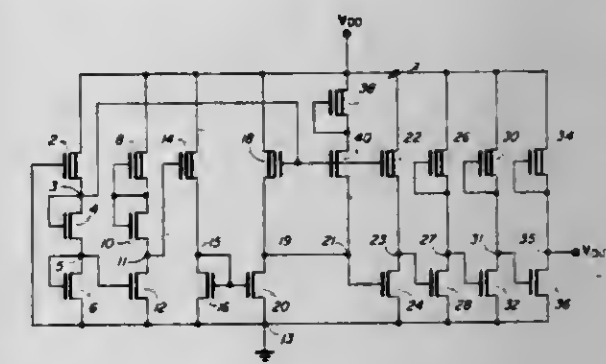

1. A circuit for detecting when a supply voltage falls below a predetermined value, comprising:
first means for receiving said supply voltage and generating therefrom a first reference voltage;
voltage dividing means coupled to said supply voltage for producing a non-linear divided voltage therefrom;
comparing means coupled to said first means and said voltage dividing means for generating an output when said divided voltage falls below said first reference voltage; and
amplifying means coupled to said comparing means for amplifying said output.

4,301,381
TTL-COMPATIBLE ADDRESS LATCH WITH FIELD EFFECT TRANSISTORS
Rainer Clemen, Boeblingen; Joerg Gschwendtner, Esslingen, and Werner Hang, Boeblingen, all of Fed. Rep. of Germany, assignors to International Business Machines Corporation, Armonk, N.Y.
Filed Aug. 14, 1979, Ser. No. 66,595
Claims priority, application Fed. Rep. of Germany, Sep. 6, 1978, 2838817
Int. Cl.³ H03K *5/00, 3/356*
U.S. Cl. 307—475 **6 Claims**

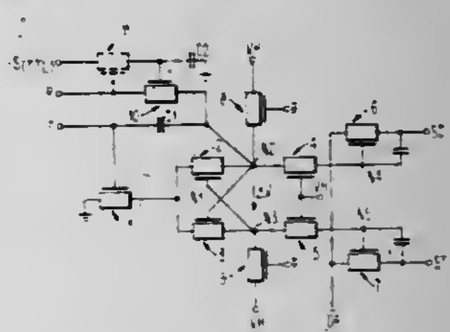

1. A field effect transistor circuit, for converting first and second relatively low logic voltage levels to first and second relatively higher logic voltage levels, comprising:
first and second field effect transistors having drain, source, and gate electrodes, their drain and gate electrodes being respectively cross coupled forming first and second latch nodes, their source electrodes being connected in common;
first circuit means connected to the first and second latch nodes for precharging the first and second latch nodes to the first relatively higher logic level from a first potential source;
a third field effect transistor having drain, source, and gate electrodes for selectively isolating the common source

connection of said first and second field effect transistors from a second potential source;
an input terminal for receiving said first and second relatively low logic voltage levels;
second circuit means for coupling said input terminal to said first latch node;
a control terminal for receiving a clock pulse signal; and
capacitive means for coupling the control terminal only to the first latch node and not to the second latch node such that the occurrence of a clock pulse at said control terminal causes charge to be coupled only to said first latch node.

4,301,382
I2L WITH PNPN INJECTOR
Syuichi Kameyama, Yokohama, Japan, assignor to Tokyo Shibaura Denki Kabushiki Kaisha, Japan
Filed Apr. 21, 1980, Ser. No. 142,116
Claims priority, application Japan, Apr. 27, 1979, 54-51433
Int. Cl.³ H03K *19/091;* H01L *27/04*
U.S. Cl. 307—477 6 Claims

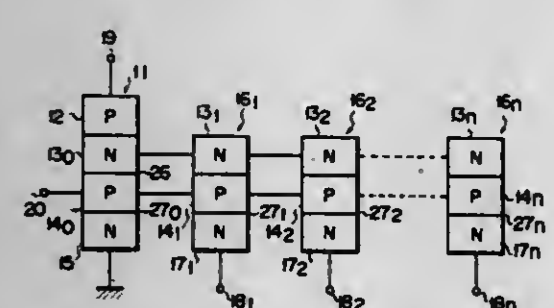

1. A one-input multi-output semiconductor device comprising:
a first region of a first conductivity type formed on a semiconductor substrate;
an isolation region of a second conductivity type selectively formed in said first region, whereby said first region is divided into a plurality of island regions;
a plurality of semiconductor elements formed severally in said island regions and each composed of a four-region device and at least one bipolar transistor;
each of said semiconductor elements including a second region of said second conductivity type formed in one of said island regions, a third region of said second conductivity type formed in said one island region at a space from said second region, a fourth region of said first conductivity type formed in said third region and connected to a reference potential, and a plurality of fifth regions of said first conductivity type formed in said third region spaced from one another and from said fourth region, and said second region, one island region, third region and fourth region constituting said four-region device, and said island region, third region and fifth regions constituting said transistor;
means for supplying voltage between the second and fourth regions of said four-region device;
input means connected to said third region for causing said four-region device to conduct; and
output means connected to each of the fifth regions of said transistor, and said island region being floated.

4,301,383
COMPLEMENTARY IGFET BUFFER WITH IMPROVED BIPOLAR OUTPUT
David L. Taylor, Carrollton, Tex., assignor to Harris Corporation, Melbourne, Fla.
Filed Oct. 5, 1979, Ser. No. 82,185
Int. Cl.³ H03K *17/687*
U.S. Cl. 307—585 3 Claims

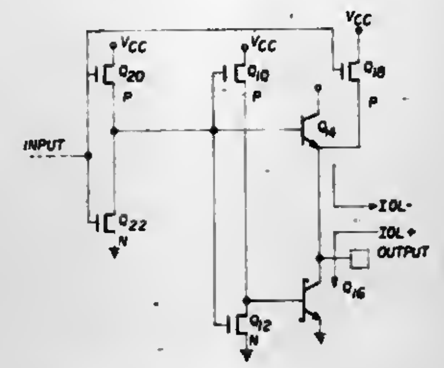

1. A switching circuit comprising:
a first complementary insulated gate field effect transistor inverter having an input and an output, said input forming the input terminal of the circuit;
a second complementary insulated gate field effect transistor inverter having an input connected to the output of said first inverter and an output;
a first bipolar transistor being connected in an emitter follower configuration with its base connected to the output of said first inverter;
a second bipolar transistor having its base connected to the output of said second inverter and its emitter-collector path connected in series with the emitter-collector path of said first bipolar transistor, the junction of said emitter-collector paths forming the output terminal of said circuit; and
an insulated gate field effect transistor having its gate connected to the input of said first inverter and its source-drain path connected between a voltage supply terminal and said output terminal.

4,301,384
END SUPPORT FOR SUPERCONDUCTING MAGNET
Albert L. Gaines, West Simsbury, Conn., assignor to Combustion Engineering, Inc., Windsor, Conn.
Filed Sep. 27, 1979, Ser. No. 79,623
Int. Cl.³ H02K *44/00*
U.S. Cl. 310—11 1 Claim

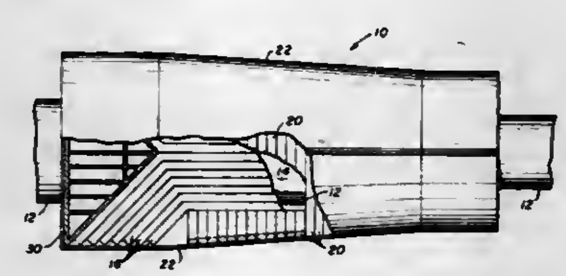

1. An improved superconducting magnet assembly suitable for use as a magnetohydrodynamic generator having an elongated channel defining a flow passage through which a high temperature, high pressure ionized gas may be passed while immersed in a high strength magnetic field produced therein, and a plurality of elongated saddle-shaped superconducting magnet rings disposed side-by-side in planes parallel to the longitudinal axis of said channel as symmetrical pairs with the end turns of each of said rings outwardly directed; the improvement comprising:
a wedge-shaped compression member disposed coaxially about said channel between the outwardly directed end turns of said symmetrical pairs so as to absorb the attractive forces generated between the end turns and transmit the absorbed forces to channel, said channel comprising an axial-load carrying member.

4,301,385
SUPERCONDUCTING MAGNET ASSEMBLY
Kenneth E. Shotwell, Stafford Springs, and Albert L. Gaines, West Simsbury, both of Conn., assignors to Combustion Engineering, Inc., Windsor, Conn.
Filed Sep. 27, 1979, Ser. No. 79,625
Int. Cl.³ H02K *44/00*
U.S. Cl. 310—11 6 Claims

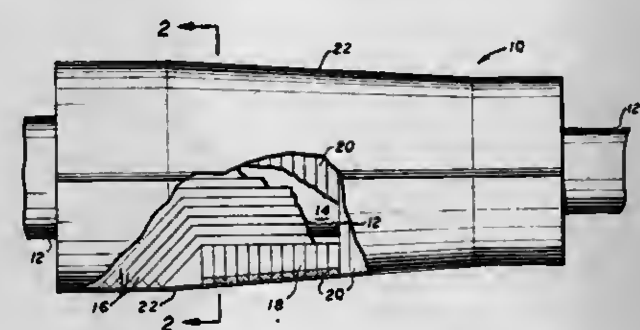

1. A superconducting magnet assembly suitable for use as a magnetohydrodynamic generator comprising:
a. a channel defining a flow passage through which a high temperature, high pressure, ionized gas may be passed while immersed in a high strength magnetic field produced therein;
b. a magnet substructure for producing the high strength magnetic field within said channel having a first magnetic pole disposed along one side of said channel and a second magnetic pole, opposite in polarity to the first magnetic pole, symmetrically disposed along the opposite side of said channel, the outer surfaces of the first and the second magnetic poles machined to conform to a pre-calculated catenary-shaped curve;
c. a support superstructure for absorbing and equilibrating the repulsive magnetic forces generated within said magnet substructure when said magnet substructure is energized, the inner surface of said superstructure machined to conform to said pre-calculated catenary-shaped curve so as to mate with the outer surfaces of the first and second magnetic poles of said magnet substructure; and
d. a pressure containment shell for enclosing therein said magnet substructure and said superstructure, said pressure containment shell having end openings for permitting said channel to penetrate therethrough.

4,301,386
ROTOR LAMINAE ASSEMBLY FOR A CAST ROTOR DYNAMOELECTRIC MACHINE
Walter M. Schweder, Schenectady, and Henry G. Lenz, Scotia, both of N.Y., assignors to General Electric Co., Schenectady, N.Y.
Filed Aug. 12, 1977, Ser. No. 824,104
Int. Cl.³ H02K *9/00*
U.S. Cl. 310—59 7 Claims

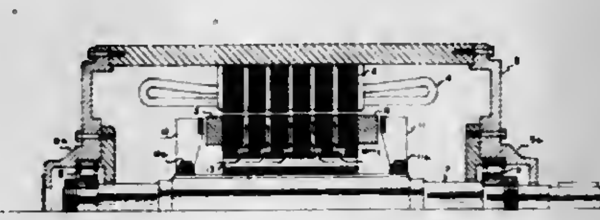

1. A rotor laminae assembly for a dynamoelectric machine having cast axial conductors and radial ventilating ducts extending between said conductors at axially spaced intervals, characterized by the improvement comprising:
a. a plurality of substantially flat, annular main rotor laminae each formed with apertures therein to define, respectively, a plurality of conductor slots arcuately spaced adjacent to the periphery of the laminae and a plurality of coolant passageways arcuately spaced between the inner ends of said conductor slots and the inner diameter of the laminae,
b. a plurality of substantially flat, annular vent laminae each provided with apertures that define, respectively, a plurality of conductor slots arcuately spaced adjacent to the periphery of the laminae and a plurality of vent apertures arcuately spcaced between the inner ends of said conductor slots and the inner diameter of the laminae, each of said vent apertures being formed with a radial dimension substantially greater than the maximum radial dimension of the coolant passageway formed in said main laminae,
c. a plurality of substantially flat, annular duct laminae each provided with apertures that define, respectively, a plurality of conductor slots arcuately spaced adjacent to the periphery of the laminae, a plurality of coolant passageways arcuately spaced between the inner ends of the conductor slots and the inner diameter of the laminae, and a plurality of coolant duct slots extending from the periphery of the laminae to a point between the inner ends of the conductor slots and the outer extent of the coolant passageways, said point being radially positioned between said outer extent of the coolant passageways and the outer extent of the vent apertures in adjacent vent laminae thereby to place the inner end of each duct slot in overlapping relationship with an adjacent vent aperture and to position each vent aperture in overlapping relationship with a coolant passageway in adjacent main rotor laminae,
d. said plurality of main rotor laminae, vent laminae and duct laminae being aligned with each other to place the conductor slots in alignment, and a plurality of cast electrical conductors disposed, respectively, in each of said conductor slots and joined together at the opposite ends thereof, respectively, by a pair of annuli cast with said conductors, said cast conductors being effective to hold the rotor laminae assembly together.

4,301,387
PROTECTION OF CARBON ARTICLES
Josef Schiffarth; Clive G. Lorkin, and Kenneth J. Fletcher, all of Borken, Fed. Rep. of Germany, assignors to Foseco International Limited, Birmingham, England
Continuation of Ser. No. 518,962, Oct. 29, 1974, abandoned, which is a division of Ser. No. 343,217, Mar. 21, 1973, abandoned. This application May 14, 1976, Ser. No. 686,420
Claims priority, application United Kingdom, Mar. 22, 1972, 13390/72; Jul. 26, 1972, 34986/72
Int. Cl.³ H01J *1/14*
U.S. Cl. 313—355 13 Claims

1. An article consisting of a self-supporting pre-formed electrode protection sheet, the composition of the sheet consisting essentially of a matrix material of boric oxide which is a graphite-wetting material and silicon carbide as a refractory filler, the boric oxide and silicon carbide being bonded to coherent sheet form.

4,301,388
COLOR CODING OF WRITE-THROUGH INFORMATION IN DIRECT VIEWING BISTABLE STORAGE CRT DISPLAY
William M. Mason, Sherwood, Oreg., assignor to Tektronix, Inc., Beaverton, Oreg.
Filed Jun. 2, 1977, Ser. No. 802,615
Int. Cl.³ H01J *31/58, 29/10*
U.S. Cl. 313—398 10 Claims

1. A direct viewing cathode ray storage tube, comprising an evacuated envelope having a light transparent faceplate,

a storage target including a storage dielectric of phosphor material mounted within said envelope,

means for bombarding said storage dielectric with a beam of high velocity electrons to form a charge image thereon, and

means for bombarding said storage dielectric with low velocity electrons to cause bistable storage of charge images having a potential at least equal to a critical minimum voltage necessary for such storage, and to prevent storage of charge images having a potential below said critical minimum voltage,

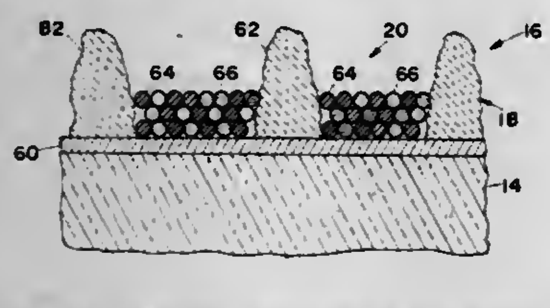

said phosphor material comprising a substantially uniform admixture that includes a first phosphor capable of bistable storage of charge images and a second phosphor having a color emission different from that of said first phosphor and having a light output efficiency in response to bombardment by said low velocity electrons that is lower than that of said first phosphor, such that bombardment of the admixed material by said high velocity electrons causes the emission of a light image of a certain perceived color, and bombardment of said material by said low velocity electrons causes the emission of a light image corresponding to a storage charge image, the latter light image being of a perceptibly different color.

4,301,389

MULTIPLE BEAM CATHODE RAY TUBE WITH APERTURED CATHODE AND CONTROL GRID

Vernon D. Beck, Ridgefield, Conn.; Bruce P. Piggin, Sherfield English, England, and Arthur E. Uber, III, Pittsburgh, Pa., assignors to International Business Machines Corp., Armonk, N.Y.

Filed Dec. 12, 1979, Ser. No. 102,794

Int. Cl.³ H01J ***29/50***

U.S. Cl. 313—411 **14 Claims**

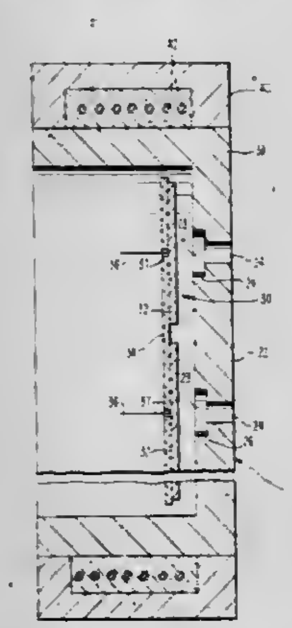

1. A multiple beam cathode ray tube wherein a plurality of electron beams form an image on the screen of the tube, and having a cathode-grid structure which substantially reduces grid mounting and grid lead-connection problems, comprising,

a cathode ray tube envelope having a screen disposed at one end thereof,

cathode means disposed in said cathode ray tube envelope near the other end thereof for emitting a plurality of physically separated groups of electrons,

said cathode means having a plurality of openings therein wherein each opening corresponds to a said group of electrons, and

grid means disposed in said envelope between said cathode means and said other end of said cathode ray tube envelope for directing each group of electrons which is emitted, through the opening which corresponds thereto in the direction of said screen, for establishing said plurality of beams which form said image.

4,301,390

AUTOMATIC HEADLIGHT SWITCH

John L. Earle, 2905 Crane St., Lemon Grove, Calif. 92045

Continuation of Ser. No. 875,083, Feb. 3, 1978, which is a continuation of Ser. No. 707,601, Jul. 7, 1976, which is a continuation of Ser. No. 573,970, May 2, 1975. This application Oct. 5, 1978, Ser. No. 948,820

Int. Cl.³ B60Q ***1/02***

U.S. Cl. 315—82 **17 Claims**

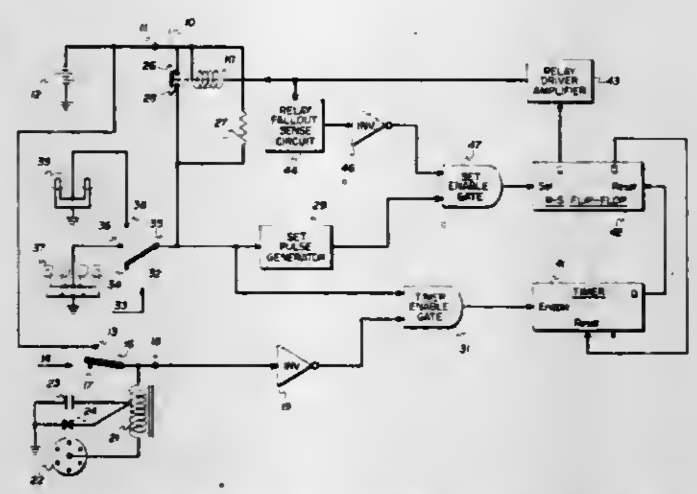

1. In a vehicle having lights therein powered by a battery through a normal light switch and an ignition switch connecting the battery to a vehicle ignition system, an automatic headlight switch system comprising:

a relay having a solenoid and first and second contacts thereof, said relay operative for shorting together said first and second contacts upon the energization of said solenoid, said first and second contacts being connected to in serial relationship with said normal light switch and said battery;

energizing circuit means coupled between said normal light switch and said relay solenoid, said energizing circuit means operable for energizing said solenoid upon receiving a transient pulse produced when the normal light switch is turned from an on-off position to an on position; and

de-energizing circuit means coupled between said ignition switch and said relay solenoid, said de-energizing circuit means being operable for de-energizing said relay solenoid upon the changing of said ignition switch from an "on" state to an "off" state.

4,301,391

DUAL DISCHARGE PLASMA DEVICE

Robert L. Seliger, Agoura, and Laurence C. Dumage, Simi Valley, both of Calif., assignors to Hughes Aircraft Company, Culver City, Calif.

Filed Apr. 26, 1979, Ser. No. 33,344

Int. Cl.³ H01J ***7/24;*** **H05B** ***31/26***

U.S. Cl. 315—111.31 **10 Claims**

10. The method of producing a nonsputtering plasma in a first discharge chamber having an electron source therein, having an opening from the first discharge chamber and having an anode adjacent the opening together with a second

discharge chamber beyond the opening from the first discharge chamber and a second anode in the second discharge chamber, comprising the steps of;

supplying only fuel gas to the first discharge chamber with sufficient flow that in view of the opening from the first discharge chamber sufficient pressure is maintained in said first discharge chamber so that the plasma discharge voltage which produces a plasma in the gas is below the sputtering threshold of the electron source;

applying a potential between the electron source and the anode sufficient to produce a plasma therebetween with the anode positive with respect to the electron source and

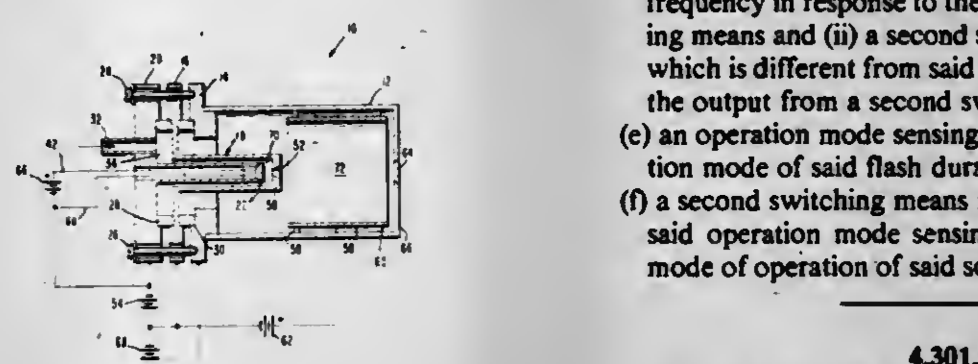

with the plasma discharge voltage below the sputtering threshold voltage of the electron source to produce a plasma in the first discharge chamber with a plasma plume extended out of the opening from the first discharge chamber;

providing gas into the second discharge chamber by flow only out of the opening from the first discharge chamber so that the second discharge chamber is at a lower pressure than the first discharge chamber;

applying a potential between the second anode and the anode with the second anode positive with respect to the anode sufficiently to produce a plasma in the second discharge chamber which is coupled to the plasma plume.

4,301,392

ELECTRONIC FLASH SYSTEM CAPABLE OF AUTOMATICALLY FLASH DURATION CONTROL

Shinji Hirata, Toyonaka, Japan, assignor to West Electric Co., Ltd., Osaka, Japan

Filed Apr. 3, 1980, Ser. No. 136,882

Claims priority, application Japan, Apr. 9, 1979, 54-43241

Int. Cl.³ H05B ***41/32***

U.S. Cl. 315—241 P **6 Claims**

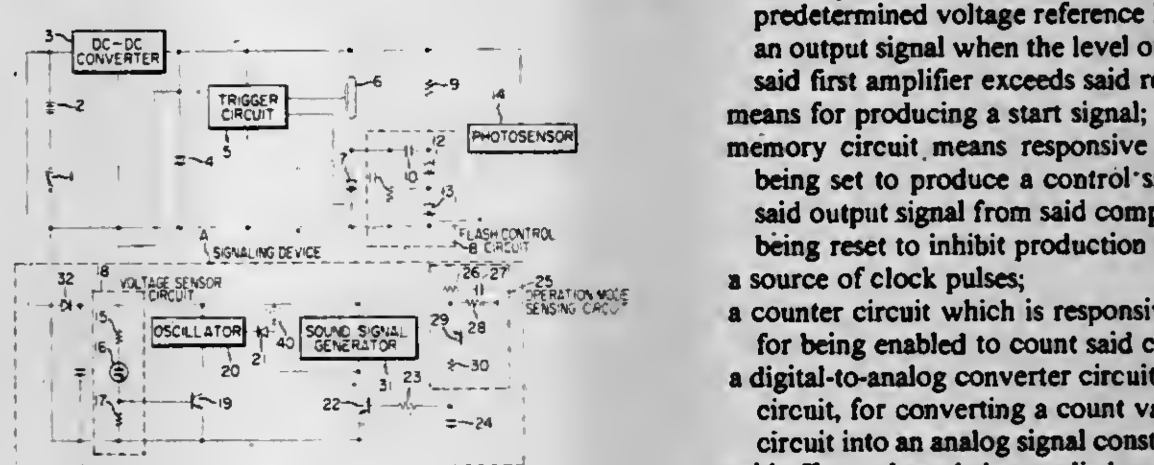

1. In an electronic flash system capable of automatically controlling the flash duration and comprising:

a main discharge capacitor;

a flash lamp for converting the energy stored in said main discharge capacitor into light;

a photosensor circuit for providing an output signal in response to the light reflected back from a subject illuminated by the light emitted from said flash lamp; and

a flash duration control circuit responsive to the output signal from said photosensor circuit for controlling the flash duration of said flash lamp, the improvement comprising:

(a) a stored-voltage sensing circuit for sensing the voltage stored across said main discharge capacitor;

(b) a first switching means which is controlled in response to the output from said storage-voltage sensing circuit;

(c) an oscillator means which is controlled in response to the output from said first switching means;

(d) a sound signal generating means coupled to said oscillator means for generating (i) a first sound signal of a first frequency in response to the output from said first switching means and (ii) a second sound signal, the frequency of which is different from said first frequency, in response to the output from a second switching means;

(e) an operation mode sensing circuit for sensing the operation mode of said flash duration control circuit; and

(f) a second switching means responsive to the output from said operation mode sensing circuit for controlling the mode of operation of said sound signal generating means.

4,301,393

AUTOMATIC Y-AXIS OFFSET SYSTEM

Koji Shoji, and Yoshinobu Hamamoto, both of Tokyo, Japan, assignors to Anritsu Electric Company Limited, Tokyo, Japan

Filed Mar. 31, 1980, Ser. No. 135,711

Claims priority, application Japan, Mar. 31, 1979, 54-37744

Int. Cl.³ H01J ***29/70***

U.S. Cl. 315—367 **4 Claims**

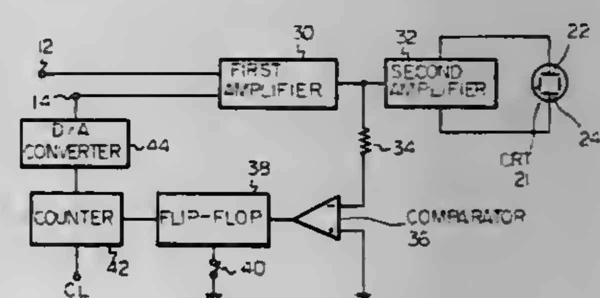

1. An automatic Y-axis offset system for a cathode ray tube, comprising:

a first amplifier circuit for amplifying an input signal and for thereby producing an output signal coupled to Y-axis deflection plates of said cathode ray tube;

comparator circuit means coupled to compare the level of said output signal from said first amplifier circuit with a predetermined voltage reference level, and for producing an output signal when the level of said output signal from said first amplifier exceeds said reference voltage level;

means for producing a start signal;

memory circuit means responsive to said start signal for being set to produce a control signal, and responsive to said output signal from said comparator circuit means for being reset to inhibit production of said control signal;

a source of clock pulses;

a counter circuit which is responsive to said control signal for being enabled to count said clock pulses;

a digital-to-analog converter circuit coupled to said counter circuit, for converting a count value held in said counter circuit into an analog signal constituting an offset voltage;

said offset voltage being applied to an input terminal of said first amplifier circuit such as to cause the level of said output signal from said first amplifier circuit to approach said reference voltage level after said start signal has been applied, said reference voltage level corresponding to a level of said output signal from said first amplifier circuit at which a trace appearing on said cathode ray tube is set at a predetermined position.

4,301,394
HORIZONTAL DEFLECTION CIRCUIT AND POWER SUPPLY WITH REGULATION BY HORIZONTAL OUTPUT TRANSISTOR TURN-OFF DELAY CONTROL
Wolfgang F. W. Dietz, New Hope, Pa., assignor to RCA Corporation, New York, N.Y.
Filed Nov. 28, 1979, Ser. No. 98,255
Int. Cl.[3] H01J *29/70, 29/76*
U.S. Cl. 315—408 **10 Claims**

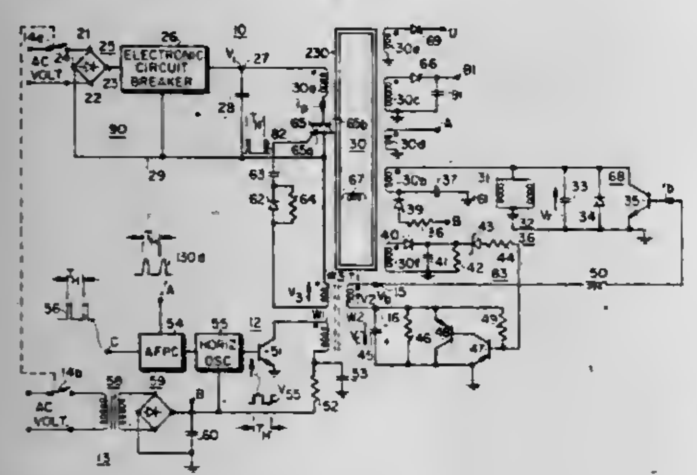

1. A deflection and energy supply circuit, comprising:
a deflection winding;
a retrace capacitance coupled to said deflection winding;
a trace switch including transistor switching means coupled to said deflection winding for generating a trace deflection current in said deflection winding when said trace switch is conductive;
a source of input voltage;
a load;
an inductance coupled to said load for transferring energy stored in said inductance to said load;
a controllable switch coupled to said source and to said inductance for applying said input voltage to said inductance to store energy in said inductance, the amount of stored energy in said inductance being controlled by the conduction duration of said controllable switch prior to the initiation of the transferral of said stored energy in said load;
means coupled to said transistor switching means and responsive to a deflection rate signal for generating a base-drive signal to control the base current in said transistor switching means, said base-drive generating means generating a forward biasing portion of said base-drive signal during a first interval within each cycle of said deflection rate signal and generating a reverse biasing portion during a second interval within each cycle of said deflection rate signal to cut off the flow of collector current within said transistor switching means after the lapse of a turn-off delay from the initiation of said reverse biasing portion, said retrace capacitance and said deflection winding forming a resonant retrace circuit upon cutoff of said collector current after the lapse of said turn-off delay applying a retrace pulse voltage to said inductance to initiate the transferral of said stored energy to said load;
means responsive to said deflection rate signal for turning on said controllable switch within each deflection cycle; and
means coupled to said base-drive generating means and responsive to variations of a deflection circuit quantity for varying said turn-off delay in response to variations of said deflection circuit quantity in order to alter the transferral of said stored energy as said deflection circuit quantity varies.

4,301,395
PHASE-LOCK CONTROL DEVICE
Takashi Furuhata, and Yasunori Kobori, both of Yokohama, Japan, assignors to Hitachi, Ltd., Tokyo, Japan
Filed Apr. 10, 1978, Ser. No. 895,065
Claims priority, application Japan, Apr. 11, 1977, 52/40371
Int. Cl.[3] H02P *5/16*
U.S. Cl. 318—314 **9 Claims**

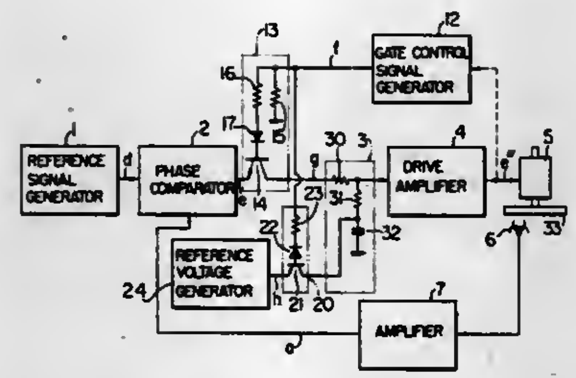

1. A control device for phase-locking a rotating member or a traveling member driven by driving means to a reference signal within a short time at the starting state of the member, comprising:
means associated with said member for producing a phase detection signal representative of the phasic position of said member;
a phase comparator for comparing the phases of said reference signal and said phase detection signal to produce a phasic error signal depending on the result of the comparison;
means for producing a control signal indicative of whether the speed of said member reaches a predetermined value; and
switching means connected with said phase comparator for feeding said phasic error signal through said switching means to said driving means, said switching means being rendered conductive to enable passage of said phasic error signal therethrough or non-conductive to inhibit the passage of said phasic error signal therethrough in response to said control signal so that said phasic error signal is fed to said driving means only after the speed of motion of said member reaches a predetermined value.

4,301,396
THERMAL CURRENT LIMITING CONTROLLER
Robert F. Bourke, Kamiah, Id., assignor to Gould Inc., Rolling Meadows, Ill.
Filed Sep. 19, 1978, Ser. No. 943,627
Int. Cl.[3] H02P *5/16*
U.S. Cl. 318—490 **19 Claims**

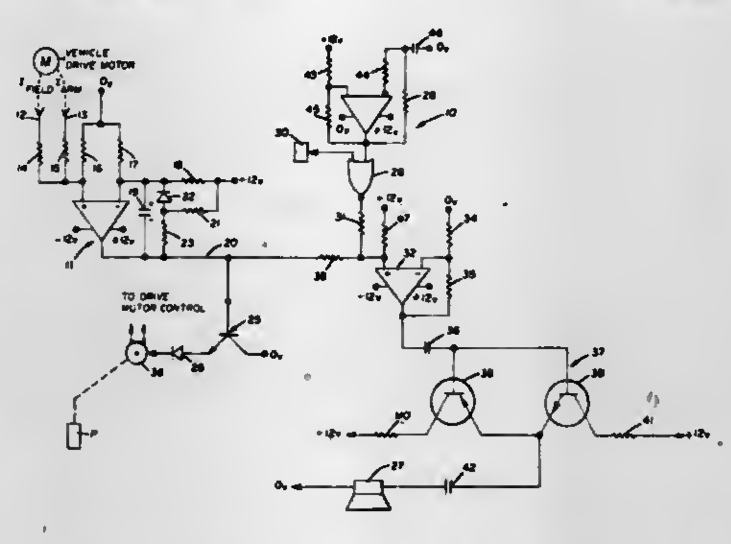

1. In an electrically propelled vehicle provided with an electric drive motor having variable field and armature currents flowing therethrough for variably propelling the vehicle, the improvement comprising:
first signal supply means for providing a first input signal corresponding to the heating effect of the field current being provided to the motor;
second signal supply means for providing a second input signal corresponding to the heating effect of the armature current being provided to the motor;
integrating means for producing a control signal proportional to the integral of said input signals with respect to time to represent calculated temperature conditions of the drive motor resulting from the total motor currents; and
output means responsive to said control signal to limit the motor currents suitably to prevent the temperature of the motor from exceeding a preselected rated maximum temperature thereof.

4,301,397
DC ANTENNA ROTATOR SYSTEM
J. Craig Journey, Fuquay-Varina, N.C., assignor to Cornell-Dubilier Electric Corporation, Newark, N.J.
Filed Apr. 24, 1980, Ser. No. 143,459
Int. Cl.[3] G05B *11/32*
U.S. Cl. 318—625 **12 Claims**

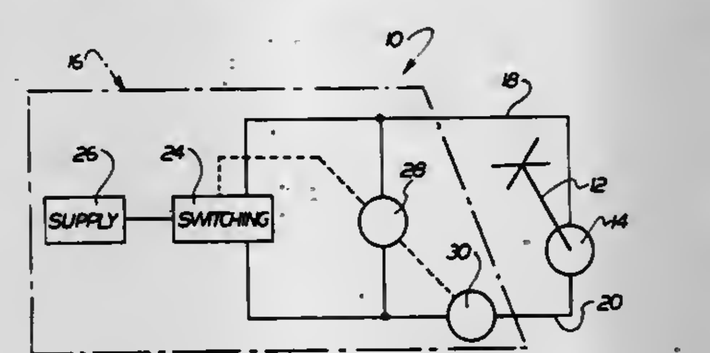

1. Antenna positioning apparatus including an antenna unit and a control unit, said apparatus comprising:
said antenna unit including a rotatable antenna support and a direct-current antenna motor therefor,
said control unit including a rotary manual control and a rotary follower coaxial therewith, a direct-current control motor coupled to said rotary follower, and switching means controlled jointly by said rotary control and said rotary follower for electrically connecting said motors to a direct-current supply means for operation in corresponding directions when said rotary control and said follower are displaced from a prescribed mutual relationship and so that said follower is operated by said control motor toward establishing said prescribed relationship, said antenna motor and said control motor having substantially identical speed-current characteristics, and
a direct-current feedback motor responsive to an electrical current in said antenna motor for effecting said control motor variably in dependence on mechanical loading that may be imposed on said antenna motor.

4,301,398
METHOD AND APPARATUS FOR CONTROLLING A RESONANT POWER MODULE
Robert W. Johnson, Levittown, Pa., assignor to Exide Electronics Corporation, Philadelphia, Pa.
Filed May 29, 1980, Ser. No. 154,503
Int. Cl.[3] H02J *7/10;* **H02M** *3/315*
U.S. Cl. 320—21 **12 Claims**

1. A power module of the resonant type comprising:
a resonant power circuit for supplying current to a load;
first and second switching elements coupled to the resonant circuit for alternately supplying current to the resonant circuit;
trigger generator means coupled to the switching elements for supplying trigger signals to alternately enable the first and second switching elements; and
control means coupled to the trigger generator means for operating the power module in a first mode wherein the

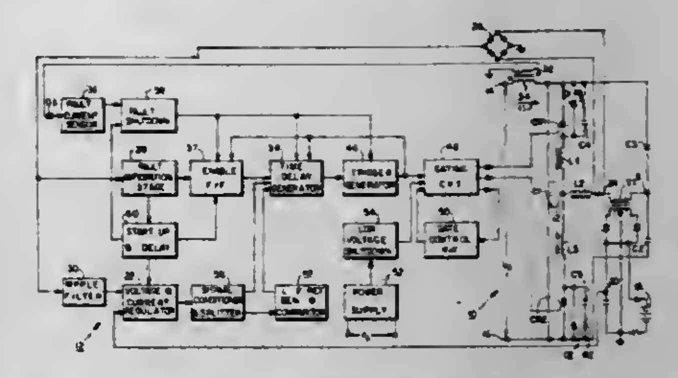

resonant circuit current is controlled by varying the repetition rate of the trigger signals and in a second mode wherein the trigger signal repetition rate is fixed and the resonant circuit current is controlled by varying the on/-off duty cycle of the power module.

4,301,399
MONITORING OF ELECTRICAL INSULATION INTEGRITY
Harvey A. Miller, Tequesta; Jon P. Newman, North Palm Beach, and Charles R. Yemington, Palm Beach Gardens, all of Fla., assignors to Perry Oceanographics, Inc., Riviera Beach, Fla.
Filed Jul. 3, 1979, Ser. No. 54,401
Int. Cl.[3] G01R *31/12*
U.S. Cl. 324—54 **13 Claims**

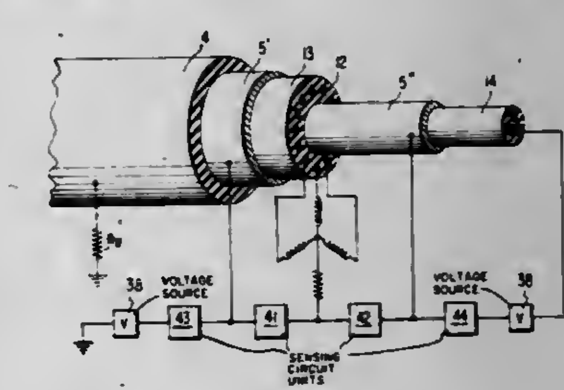

1. A method for monitoring the integrity of the insulation of an electrical device having at least two conductive members having a potential therebetween and at least two insulating layers successively surrounding the conductive members, said method comprising interposing an electrically conductive, integrity monitoring layer between the two insulating layers so that a first one of the insulating layers is disposed between the conductive members and the conductive layer and a second one of the insulating layers is disposed between the conductive layer and the environment surrounding the device; monitoring the impedance of the first layer between the conductive members and the conductive layer; and monitoring the impedance of the second layer between the conductive layer and the surrounding environment.

4,301,400
MICROWAVE WATER IN CRUDE MONITOR
Hans J. Paap, Houston, Tex., assignor to Texaco Inc., White Plains, N.Y.
Filed Dec. 26, 1979, Ser. No. 106,585
Int. Cl.[3] G01R *27/04*
U.S. Cl. 324—58.5 A **5 Claims**

1. A system for measuring the percent quantity of water in crude oil flowing in a pipe line comprising cell means arranged with pipe line so that the crude oil flows through the cell

means, microwave transmission means spatially arranged with the cell means for transmitting microwave energy through the crude oil flowing through the cell means, receiver means spatially arranged with the cell means for receiving the transmitted energy and for providing a signal corresponding to the received energy, and means connected to the receiver means for providing an indication of the quantity of water in the crude oil, said indicating means includes means for providing reference signals, each reference signal corresponding to a different percent water content of the crude oil, comparing means connected to the receiver means and to the reference signal means for comparing the signal from the receiver means with the reference signals to provide a signal corresponding to the percent water content of the crude oil, decoding means connected to the comparing means for providing control signals in accordance with the signals from the comparing means, display signal means for providing display signals corresponding to different percent content of water of the crude oil,

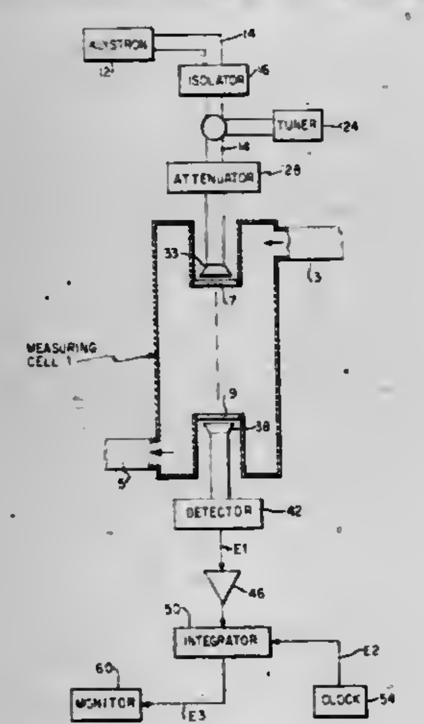

switching means connected to the decoding means and to the display signal means for selecting the proper display signals in accordance with the control signals from the decoding means to provide selected display signals, and display means connected to the switching means for providing a display in accordance with the selected display signals, and wherein said reference signals means include an analog-to-digital converter means connected to the receiver means for providing digital signals corresponding to the signal from the receiver means, a plurality of reference signal channels connected to the analog-to-digital converter means and controlled to store appropriate digital signals ccorresponding to known percent water volume of the crude oil, and control signal means connected to the plurality of reference signal channels and to the decoding means for controlling the plurality of reference signals channels for different known conditions of the crude oil and for inhibiting the decoding means while developing the reference signals.

4,301,401
DIELECTRIC CONSTANT DETECTOR

Lewis B. Roof, and L. V. Benningfield, Jr., both of Bartlesville, Okla., assignors to Phillips Petroleum Co., Bartlesville, Okla.
Filed Sep. 18, 1979, Ser. No. 76,709
Int. Cl.³ G01R *27/26*
U.S. Cl. 324—61 R **25 Claims**

1. A dielectric constant detector comprising:
a reference cell having first and second plates which form a first capacitor;
a sample cell having first and second plates which form a second capacitor;
means for passing a fluid through said reference cell;
means for passing a fluid through said sample cell; and
means for substantially matching the capacitance of said first capacitor with the capacitance of said second capacitor when the same fluid is flowing through both said reference cell and said sample cell.

12. Apparatus for obtaining an analysis of the concentration of a component of a material comprising:
a chromatographic separation column means;
means for passing a stream of a carrier fluid to said chromatographic separation column means;
means for injecting a sample of said material into said stream of said carrier fluid flowing to said chromatographic separation column means;
a dielectric constant detector means having a sample cell and a reference cell;

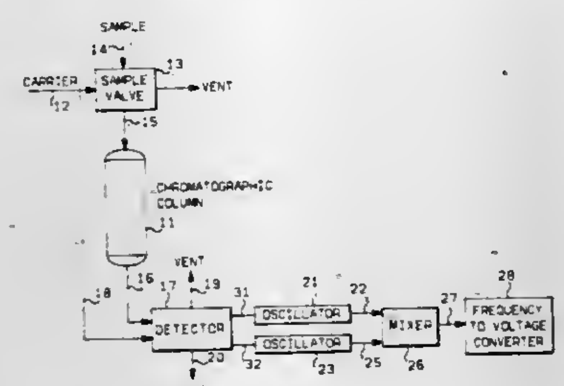

means for adjusting the capacitance of at least one of said sample cell and said reference cell in such a manner that the capacitance of said sample cell is substantially equal to the capacitance of said reference cell when only said carrier fluid is flowing through both said reference cell and said sample cell;
means for passing the stream of said carrier fluid containing separated components of the sample of said material from said chromatographic separation column means through said sample cell of said dielectric constant detector means; and
means for passing a stream of said carrier fluid through said reference cell of said dielectric detector means, the difference between the capacitance of said sample cell and the capacitance of said reference cell being representative of the concentration of a component of said sample passing through said sample cell.

4,301,402
ELECTRICAL MEASURING CIRCUIT

Mikhail M. Galkin, ulitsa Dostoevskogo, 13, Kratovo Moskovskoi oblasti; Marat I. Kornienko, ulitsa Dugina, 10, kv. 66; Boris P. Podboronov, ulitsa Molodezhnaya, 30, kv. 50, both of Zhukovsky Moskovskol oblasti; Sergel S. Sokolov, ulitsa Vavilova, 5/3, kv. 137, Leningrad, and Anatoly V. Furman, ulitsa Chkalova, 21, kv. 6, Zhukovsky Moskovskoi oblasti, all of U.S.S.R.
Continuation of Ser. No. 896,759, Apr. 17, 1978. This application Dec. 18, 1979, Ser. No. 104,714
Int. Cl.³ G01R *27/02*
U.S. Cl. 324—62 **8 Claims**

1. A multipoint measuring device comprising:
a measuring bridge network;
a plurality of transducers for converting a quantity under measurement to an electrical signal, said plurality of transducers divided into two identical groups to be selectively connected in one arm of said measuring bridge network;
a selector switch for selectively connecting one or the other of said two identical groups of transducers in said one arm of said measuring bridge network;
a first, a second, a third and a fourth compensator for providing a voltage to compensate for the impedance of the leads between said selector switch and said transducers and for the contact resistance of said selector switch;
said first and third compensators belonging to said first transducer group, each being connected to said selector switch, said first compensator being connected to a supply point of said bridge network and said third compensator being connected to a measurement point of a measuring diagonal of said bridge network;
said second and fourth compensators belonging to said second transducer group, each being connected to said selector switch, said second compensator being connected to a supply point of said bridge network and said fourth compensator being connected to a measurement point of a measuring diagonal of said bridge network;

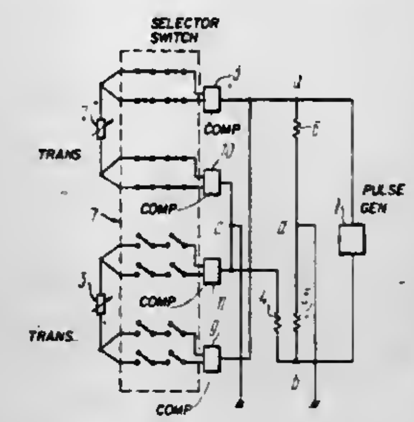

said first transducer group and said second transducer group connected alternatively in said one arm of said measuring bridge network by action of said selector switch via their said respective first, third, second and fourth compensators, whereby said first, third and second, fourth compensators provide voltage compensation for the impedance of the leads between said selector switch and said respective group of transducers and compensation for the contact resistance of said selector switch during a measurement operation.

4,301,403
ELECTRICAL CIRCUIT TESTING

David W. Hawkes, and Ian C. Hutcheon, both of Luton, England, assignors to Measurement Technology Ltd., Luton, England
Filed Dec. 21, 1979, Ser. No. 106,019
Claims priority, application United Kingdom, Dec. 21, 1978, 49735/78
Int. Cl.³ G01R *27/02*
U.S. Cl. 324—62 **13 Claims**

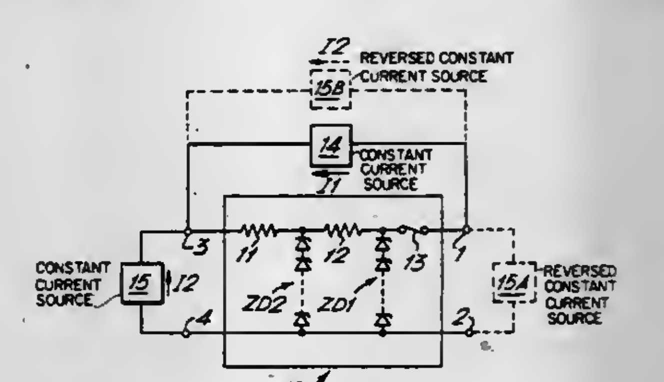

1. A method of testing operation of an electrical circuit, the circuit having a plurality of current paths therethrough and a component capable of changing the impedance of one of said paths, in which method at least one electrical test signal is applied to said circuit to cause said component to change said impedance thereby to permit testing of at least one other component of said circuit.

4,301,404
METHODS AND APPARATUS FOR ANALYZING PERIODIC WAVEFORMS

Anthony J. Ley, Blevres, France, assignor to Solartron Electronic Group Limited, Farnborough, England
Filed Feb. 6, 1980, Ser. No. 119,070
Claims priority, application France, Feb. 9, 1979, 79 03358
Int. Cl.³ G01R *23/16*
U.S. Cl. 324—77 B **4 Claims**

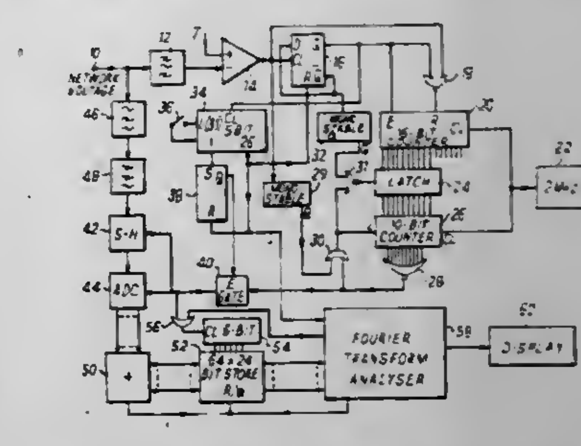

1. A method of analysing a periodic waveform comprising the steps of:
deriving samples throughout each of a plurality of cycles of said waveform at a rate which is an integral multiple of the frequency of said waveform;
summing each sample with corresponding samples derived in each of the other of said plurality of cycles of said waveform;
and
applying a Fourier transformation to said summed samples to derive a measurement of at least one characteristic of said waveform.

4,301,405
INTERVAL-TO-RATE CONVERTER

Scott W. Carlson, Blaine, Minn., assignor to Cardiac Pacemakers, Inc., St. Paul, Minn.
Filed Oct. 24, 1979, Ser. No. 87,790
Int. Cl.³ G01R *23/02*
U.S. Cl. 324—78 D **5 Claims**

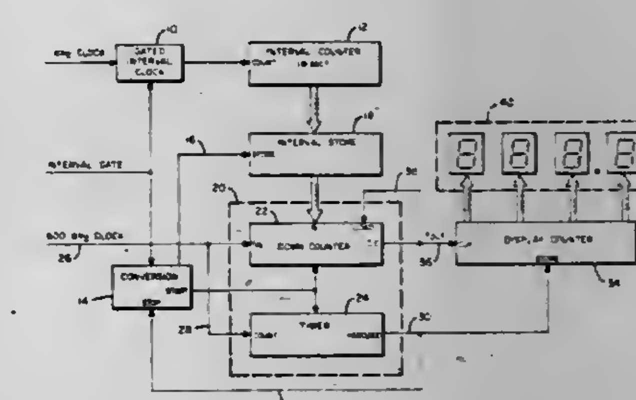

1. Apparatus for measuring the repetition rate of pulses in a pulse train of unknown frequency, comprising:
(a) interval measuring means for developing a binary coded value proportional to the time interval between two successive pulses in said pulse train;
(b) first means connected to periodically receive said binary coded value from said interval measuring means;
(c) second means for establishing a known time period;
(d) control means connected to said first means for repeatedly decrementing said binary coded value to zero and re-entering said binary coded value into said first means when said value reaches zero; and
(e) third means for tallying the number of times said digital

value is decremented to zero during said known time period.

4,301,406
MICROWAVE WARNING DEVICE
Walter Shriner, 8 S. Badalona, Hot Springs Village, Ark. 71901
Filed Apr. 23, 1979, Ser. No. 32,264
Int. Cl.³ G01R *21/04, 19/00;* G08B *21/00*
U.S. Cl. 324—95 2 Claims

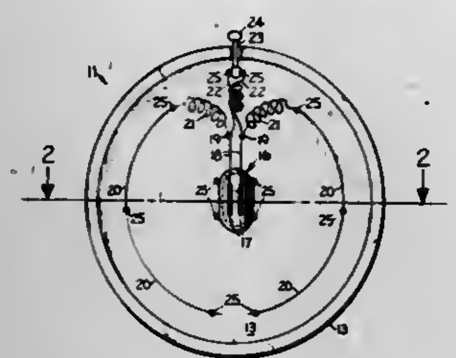

1. A device for warning a person of the momentary presence of a dangerous intensity of microwave radiation, comprising: an at-least-partly-translucent housing member of the size and shape of a pocket watch, a low-wattage gaseous-discharge light-emitting element in said housing member, antenna means carried by said housing member and operatively coupled to said light-emitting element to cause it to variably glow responsively to dangerously intense radiations detected by said device, said antenna means comprising a pair of wires constituting a dipole and connected to opposite terminals of said light-emitting element, at least one of said dipole wires having induction-coil-forming tuning convolutions in its end adjacent said light-emitting element, a pair of short flexible insulation-covered wires helically intertwined and with one end of each connected to a different terminal of said light-emitting element to constitute a variable capacitor bridging said light-emitting element, and means exterior to said casing for twisting said intertwined wires to vary the capacitance of said capacitor.

4,301,407
HAND HELD TESTING DEVICE FOR INDICATING AN ELECTRIC TEST VOLTAGE
Manfred Koslar, Rheda-Wiedenbrueck, Fed. Rep. of Germany, assignor to Siemens Aktiengesellschaft, Berlin and Munich, Fed. Rep. of Germany
Filed Oct. 22, 1979, Ser. No. 87,035
Claims priority, application Fed. Rep. of Germany, Oct. 26, 1978, 2846675
Int. Cl.³ G01R *13/02, 19/16*
U.S. Cl. 324—96 15 Claims

1. A hand held testing device for indicating different values of an electric test voltage, said device comprising
(a) at least one grip adapted to be held in the hand; and
(b) an electric circuit, arranged in said grip body, said circuit including
(1) a connecting point, adapted for receiving a test voltage;
(2) a ground connection;
(3) a voltage divider being composed of a plurality of ohmic resistors connected in series and having a connector tap connecting each two adjacent ones of said resistors; said voltage divider being connected between said connecting point and said ground connection;
(4) a plurality of display stages, each stage including a non-linear operating differential amplifying circuit and a diode, each stage being associated with a respective one of said connector taps and indicating the presence of a given value of said test voltage applied to said connecting point; each of said amplifying circuits having a control input connected to a respective one of said connector taps of said voltage divider, a voltage supply input and an output; said diodes of said plurality of said display stages being arranged in series such that each diode except for the one forming the last diode of the series connection is connected between the outputs of respective ones of two adjacent amplifying circuits, wherein only one of said amplifying circuits is switched

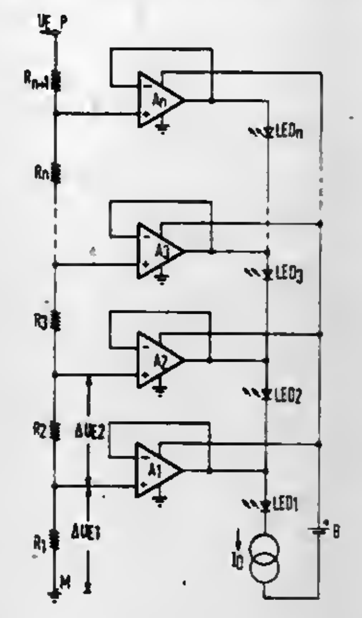

on at a time under control of a respective threshold of a present test voltage; and
(5) a voltage supply having an output of one polarity commonly connected to said voltage supply inputs of said amplifying circuits and an output of opposite polarity connected to said last diode of said series connection of said diodes.

4,301,408
ELECTRICAL MEASURING APPARATUS EMPLOYING MAGNETO-ELECTRIC DEVICES
Eric Paddison, deceased, late of Stafford, England (by Ethel Paddison, administratrix); Roger G. Fordham, Stafford, and Alan J. Thomas, Skipton, both of England, assignors to The General Electric Company Limited, London, England
Filed May 9, 1979, Ser. No. 37,415
Claims priority, application United Kingdom, May 15, 1978, 19656/78
Int. Cl.³ G01R *21/06, 33/00*
U.S. Cl. 324—141 4 Claims

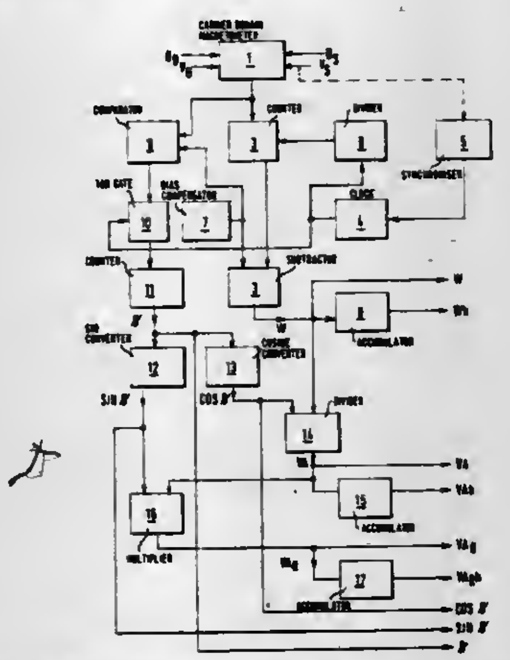

1. An electrical measuring apparatus for use with an alternating current electrical power supply system, comprising: a carrier domain magnetometer responsive to a voltage input representative of the system voltage and a magnetic flux input representative of the system current to produce a train of pulses whose frequency varies with the product of said inputs; first counter means responsive to the output of the magnetometer to produce an output count representative of the number of pulses in the magnetometer output during a preceding predetermined period; bias compensating means arranged to produce a count equal to the output count of the counter means when said voltage and magnetic flux inputs are zero; subtracting means for producing an output equal to the difference between the count of the compensating means and the output count of the counter means, and hence representative of the active power supplied by the system; comparator means responsive to the outputs of the magnetometer and the compensating means to produce an output when the frequency of the magnetometer output has a value below its value when said voltage and magnetic flux inputs are zero; an AND gate having a first input connected to the output of the comparator; a clock pulse generator connected to a second input of the AND gate; and second counter means responsive to the output of the AND gate to produce an output count representative of the number of clock pulses applied to the AND gate while the comparator produces an output, and hence representative of the phase angle between the system voltage and current.

4,301,409
SOLAR CELL ANOMALY DETECTION METHOD AND APPARATUS
Emmett L. Miller, Long Beach; Alex Shumka, La Canada, and Michael K. Gauthier, Downey, all of Calif., assignors to California Institute of Technology, Pasadena, Calif.
Continuation of Ser. No. 913,016, Jun. 6, 1978, abandoned. This application Feb. 4, 1980, Ser. No. 118,627
Int. Cl.³ G01R *1/04*
U.S. Cl. 324—158 D 10 Claims

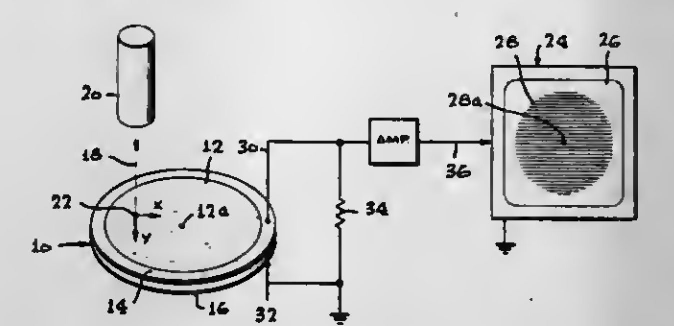

1. A method for detecting anomalies in a photo sensitive device that has electrical terminals for producing an output dependent upon incident light, comprising:
moving a narrow light beam in a scanning pattern along said photo sensitive device;
storing in a memory, a succession of signals representing the level of the output from said device as the beam is moved to a succession of locations on the surface of the device; and
repeatedly generating a raster pattern on the screen of a cathode ray tube means, with the intensity of different points on said screen controlled by different signals stored in said memory, whereby to enable clear viewing of the pattern on a cathode ray tube of the effects of a beam that is scanned over the device during an extended period of time.

4,301,410
SPIN IMAGING IN SOLIDS USING SYNCHRONOUSLY ROTATING FIELD GRADIENTS AND SAMPLES
Robert A. Wind, Zoetermeer, Netherlands, and Costantino S. Yannoni, Los Gatos, Calif., assignors to International Business Machines Corporation, Armonk, N.Y.
Filed Sep. 28, 1979, Ser. No. 79,778
Int. Cl.³ G01N *27/00*
U.S. Cl. 324—307 6 Claims

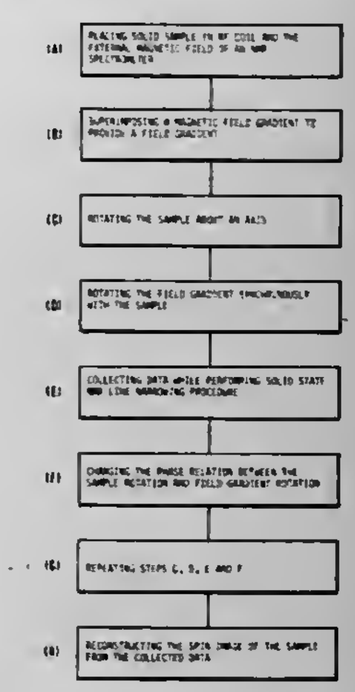

1. A method of spin-imaging in solids using nuclear magnetic resonance in which a solid sample positioned within the field of an rf excitation coil and a static external magnetic field is rotated about an axis comprising the steps of:
a. superimposing a specific magnetic field gradient on the static external magnetic field,
b. rotating the magnetic field gradient synchronously with the sample,
c. collecting data while performing solid state NMR line narrowing procedures, and
d. changing the phase relation between the sample rotation and field gradient rotation on a step-by-step basis.

4,301,411
NMR TEST METHOD FOR DISPERSION OF SOLIDS IN ELASTOMER COMPOSITIONS
Gerald E. Wardell, Killaloe, and Vincent J. McBrierty, Sutton, both of Ireland, assignors to The Provost, Fellows and Scholars of the College of the Holy and Undivided Trinity of Queen Elizabeth, Dublin, Ireland
Filed Jan. 31, 1980, Ser. No. 117,333
Claims priority, application Ireland, Feb. 1, 1979, 192/79
Int. Cl.³ G01N *27/00*
U.S. Cl. 324—307 7 Claims

1. A method for measuring the homogeneity of a dispersion of a filler substance in an elastomer composition, which method comprises: measuring, in an NMR pulse spectrometer, the intensity of a short component and a total intensity, of the proton free induction decay, of a sample of the dispersion under investigation, and deriving the ratio of the short component intensity and the total intensity obtained, said ratio (P_s) representing an empirical measure of the homogeneity of the dispersion under investigation.

4,301,412

LIQUID CONDUCTIVITY MEASURING SYSTEM AND SAMPLE CARDS THEREFOR

Jeremy R. Hill, Weston, and Allen E. Meyer, Greenwich, both of Conn., assignors to United States Surgical Corporation, Norwalk, Conn.

Filed Oct. 29, 1979, Ser. No. 89,086

Int. Cl.³ G01R *27/22*

U.S. Cl. 324—442 **9 Claims**

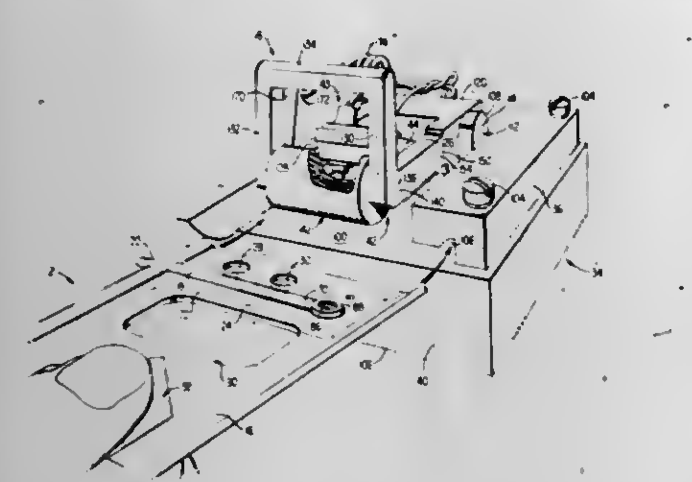

1. A system for measuring temperature-dependent parameters of a liquid sample, said system comprising:
- a base portion made of a material exhibiting excellent heat transfer characteristics;
- detecting means for detecting the temperature of said base portion;
- a disposable sample card for confining a predetermined volume of said liquid sample in intimate contact with said base portion wherein, after a period of time, said liquid sample assumes the temperature of said base portion;
- electrode means immersed within said predetermined volume of said liquid sample; and
- means connected to said electrode means and said detecting means for producing a signal indicative of the temperature-dependent parameter being measured.

4,301,413

CIRCUIT ARRANGEMENT FOR AMPEROMETRIC TITRATION

Hubert De Steur, Drongen, Belgium, assignor to Siemens Aktiengesellschaft, Berlin & Munich, Fed. Rep. of Germany

Filed Feb. 14, 1980, Ser. No. 121,378

Claims priority, application Fed. Rep. of Germany, Mar. 21, 1979, 2911151

Int. Cl.³ G01N *27/42*

U.S. Cl. 324—438 **8 Claims**

1. A circuit arrangement for an amperometric titration for determining the end point, in which the current is measured between a working electrode and a counter electrode in a vessel in which the titration agent is introduced and the current is measured as a function of the total volume of the titration agent added in volume units, and in which a reference electrode is provided in the vessel, comprising:
- a closed-loop control connected to the working counter and reference electrodes, and including a reference value input;
- a reference value generator connected to said reference value input for generating a reference value voltage;
- an impedance transformer connected to said reference electrode as a high impedance transformer; and
- a summing integrator connected to said reference value generator and said impedance transformer to produce a

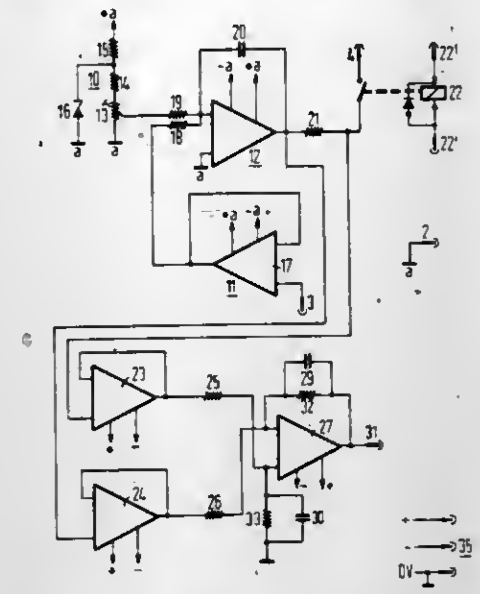

deviation signal representing the difference between said reference and actual values.

4,301,414

DISPOSABLE SAMPLE CARD AND METHOD OF MAKING SAME

Jeremy R. Hill, Weston, and Allen E. Meyer, Greenwich, both of Conn., assignors to United States Surgical Corporation, Norwalk, Conn.

Filed Oct. 29, 1979, Ser. No. 89,088

Int. Cl.³ G01R *27/22*

U.S. Cl. 324—446 **38 Claims**

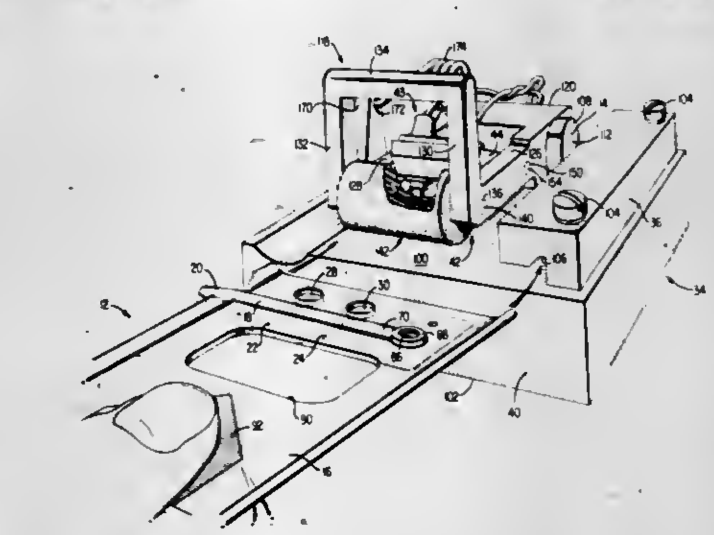

1. A sample card for use in electrically operating on a liquid sample, the card comprising:
- a body portion;
- a capillary tube defined in said body portion for receiving a liquid sample;
- first and second electrode means disposed within said capillary tube in a spaced relationship;
- measurement cell means formed by said capillary tube and bounded by said first and second electrode means for housing a predetermined volume of said liquid sample; and
- means adapted to operatively associate said first and second electrode means with an electrical signal.

4,301,415

PROGRAMMABLE MULTIPLE PHASE AC POWER SUPPLY

Dennis G. McFayden, San Diego, Calif., assignor to Norlin Industries, Inc., Deerfield, Ill.

Filed Jan. 28, 1980, Ser. No. 117,325

Int. Cl.³ H03K *5/15*

U.S. Cl. 328—24 **15 Claims**

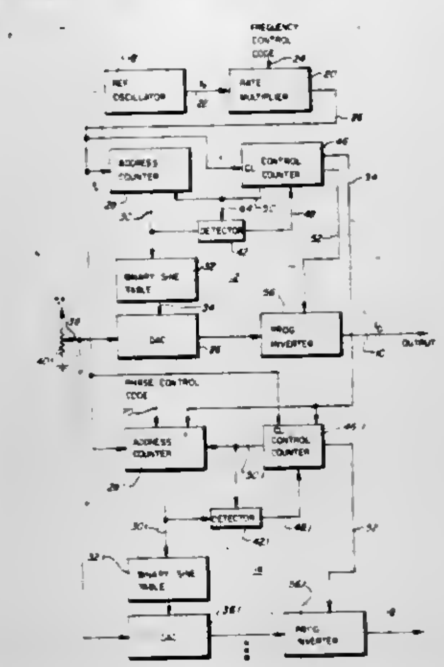

1. An oscillator for an AC power supply comprising:
- means for generating a clock signal having a selectively controllable pulse repetition rate;
- a memory storing a binary representation of a quarter-cycle sinusoidal waveform segment at a plurality of sequential memory locations;
- an address counter responsive to said clock signal and operable for developing output address signals for sequentially addressing the memory locations of said memory in a forward direction and in a reverse direction;
- control means responsive to said address signals for operating said address counter for alternately addressing the entire contents of said memory in a forward direction and in a reverse direction for causing said memory to output a continuous sequence of half-cycle sinusoidal waveform segments; and
- output means responsive to said control means for inverting every other one of the half-cycle sinusoidal waveform segments developed by said memory, whereby a periodic sinusoidal output signal is produced.

4,301,416

SERVO PREAMPLIFIER AND DEMODULATOR CHAIN USING TRANSCONDUCTANCE BALANCED MODULATORS

Avraham Perahia, San Jose, Calif., assignor to Pertec Computer Corporation, Los Angeles, Calif.

Filed Feb. 21, 1979, Ser. No. 13,038

Int. Cl.³ H03K *17/00*

U.S. Cl. 328—71 **9 Claims**

1. An improved servo demodulator channel comprising:
- a first circuit having input signal terminals, control signal terminals, and output terminals;
- a second circuit identical to said first circuit;
- a third circuit identical to said second circuit;
- means for supplying a polarity control signal at said first circuit control terminals;
- means for supplying an AGC voltage at said second circuit control terminals;
- means for supplying a clock pulse having first and second voltage states at said third circuit control terminals;
- means to interconnect said first, second and third circuits so that said first circuit will function as a polarity control switch in accordance with said polarity control signal, and supply a signal to the input of said second circuit, said second circuit will function as an AGC amplifier, supplying a signal proportional to said AGC voltage to the input of said third circuit, said third circuit will function as a signal separator supplying a first output signal propor-

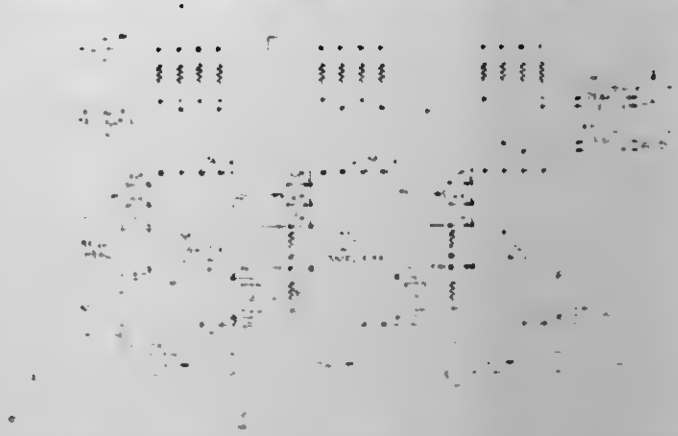

tional to said second circuit output signal to said third circuit output terminals during the time said clock pulse is in said first voltage state and a second output signal proportional to said second circuit output signal, to said third circuit output terminals during the time said clock pulse is in said second voltage state.

4,301,417

QUADRIPHASE DIFFERENTIAL DEMODULATOR

Augustinus M. Janseo, Vught, and Arien Groot, Veenendaal, both of Netherlands, assignors to NCR Corporation, Dayton, Ohio

Filed Mar. 12, 1980, Ser. No. 129,797

Int. Cl.³ H04L *27/22*

U.S. Cl. 329—50 **17 Claims**

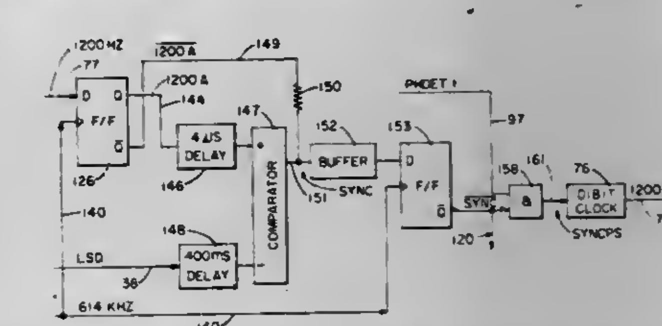

1. In a differentially encoded phase-modulated data transmission system in which a carrier signal is phase shifted over a data interval at a modulation rate to represent one of a plurality of pairs of data bits for transmission to a receiver, a demodulator apparatus for decoding the transmitted pairs of data bits comprising:
- means for detecting the start of each data interval in the received carrier signal;
- means for generating first clock pulses in response to the detecting of said data intervals;
- means for generating second clock pulses in response to the generation of said first clock pulses;
- means for decoding the carrier signal to derive a first control signal representing a predetermined pair of data bits transmitted in response to receiving said second clock pulses;
- means for adjusting the phase of the second clock pulses to the phase of the first clock pulses;
- and means responsive to the generation of said first control signal for disabling the operation of said adjusting means.

4,301,418

MAGNETORESISTIVE POWER AMPLIFIER

Daniel I. Gordon, Chevy Chase; Leonard J. Schwee, Colesville, and Wallace E. Anderson, Beltsville, all of Md., assignors to The United States of America as represented by the Secretary of the Navy, Washington, D.C.

Filed Sep. 13, 1978, Ser. No. 942,006

Int. Cl.³ H03F *15/00*

U.S. Cl. 330—62 **13 Claims**

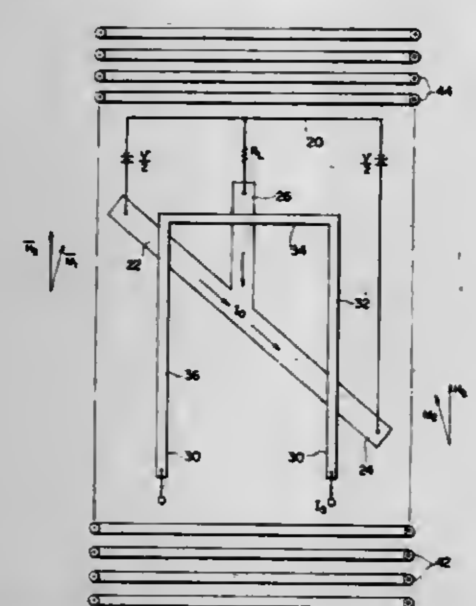

1. An amplifier, comprising:
a layer of a ferromagnetic material having two arms adjoining a node:
both arms having parallel, unidirectional hard axes;
a magnetic bias field applied to orient magnetization in the ferromagnetic layer parallel to the hard axes;
a plurality of islands of a material having an electrical conductivity greater than the electrical conductivity of the ferromagnetic material, deposited on a major surface of the layer underlying an electrical conductor and spaced apart so that an imaginary line tracing the least distance between facing edges of neighboring islands defines an oblique angle with the hard axis;
the electrical conductor disposed in a plane parallel to the ferromagnetic layer as a continuous strip;
the electrical conductor successively transversing each of the arms of the ferromagnetic layer along lines parallel to the hard axes; and
an electrical insulator separating the electrical conductor from a current in the ferromagnetic layer.

4,301,419

PARASITIC CAPACITANCE COMPENSATION IN CMOS-SWITCHED ACTIVE FILTER

Thomas J. Calomiris, Beltsville, Md., assignor to The United States of America as represented by the Secretary of the Army, Washington, D.C.

Filed Feb. 13, 1980, Ser. No. 121,181

Int. Cl.³ H03F *1/34*

U.S. Cl. 330—107 **7 Claims**

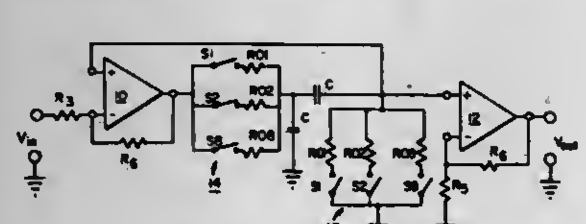

1. In an active filter circuit comprising at least one operational amplifier, a tuning matrix of impedance elements connected to said operational amplifier for tuning said filter to operate at various frequencies and a first switching means for switching various ones of said impedance elements in and out of the filter circuit, the improvement comprising:
a compensation matrix comprising at least one compensation impedance means connected to an input of said operational amplifier;
a second switching means comprising at least one controllable switch shunting at least one of said compensation impedance means, said second switching means connected to said compensation matrix for switching various ones of said compensating impedance means in and out of the filter circuit; and
comparator means for controlling said controllable switches;
whereby said active filter circuit is provided with relatively stable values of circuit parameters as said filter is tuned to different frequencies by said tuning matrix.

4,301,420

FREQUENCY CHARACTERISTIC-ADJUSTING APPARATUS

Tsutomu Sugawara, Yokohama, Japan, assignor to Tokyo Shibaura Denki Kabushiki Kaisha, Kawasaki, Japan

Filed Nov. 1, 1979, Ser. No. 90,107

Claims priority, application Japan, Nov. 9, 1978, 53-137322

Int. Cl.³ H03F *3/68*

U.S. Cl. 330—126 **10 Claims**

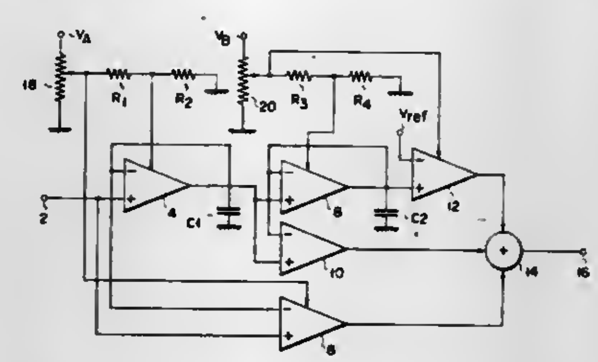

1. A frequency characteristic-adjusting apparatus comprising:
gain control signal means,
a filter circuit having capacitive means and variable impedance means, the impedance of said variable impedance means being varied in accordance with an output control signal from said control signal generating means to adjust a cut-off frequency of said filter circuit;
first amplifier means for amplifying a signal corresponding to an output signal from said filter circuit;
second amplifier means for amplifying a signal corresponding to a difference between an input signal to said filter circuit and an output signal therefrom; and
adder means for adding together output signals from said first and second amplifier means, wherein at least one of said first and second amplifier means is connected to said gain control signal means and is formed of a variable gain amplifier circuit whose gain is controlled in accordance with change in an output control signal from said gain control signal means.

4,301,421

DIRECT-COUPLED AMPLIFIER WITH OUTPUT OFFSET REGULATION

Kenji Yokoyama, Hamamatsu, Japan, assignor to Nippon Gakki Seizo Kabushiki Kaisha, Hamamatsu, Japan

Filed Nov. 20, 1979, Ser. No. 96,061

Claims priority, application Japan, Nov. 28, 1978, 53-146804

Int. Cl.³ H03F *3/45*

U.S. Cl. 330—253 **11 Claims**

1. A direct-coupled amplifier having an input terminal to receive an input signal and an output terminal to be coupled to a load, comprising:
a source of power supply having at least two terminals;

a differential amplifier circuit including first and second amplifying elements connected in differential configuration between power supply terminals, said first and second amplifying elements each having a control electrode and first and second electrodes with a conduction path formed therebetween, said control electrode of said first amplifying element being coupled to said input terminal, said control electrode of said second amplifying element being coupled to said output terminal through a negative feedback network, said first electrodes of said first and second amplifying elements being respectively coupled to one of said power supply terminals via constant current circuits

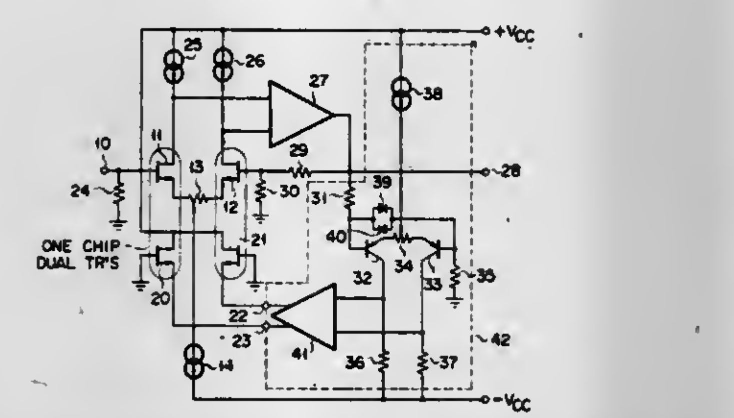

for maintaining respective currents of said first and second amplifying elements constant, said second electrodes of said first and second amplifying elements being coupled together;
an offset detector circuit to detect an output offset of said output terminal; and
an offset regulator circuit coupled to said offset detector circuit for continuously regulating, in response to said offset detector circuit, voltages between the respective control electrodes and second electrodes of said first and second amplifying elements of said differential amplifier circuit.

4,301,422

FREQUENCY SYNTHESIZER

Hiroshi Minakuchi, Kadoma, Japan, assignor to Matsushita Electric Industrial Co., Ltd., Osaka, Japan

Division of Ser. No. 865,120, Dec. 28, 1977, Pat. No. 4,207,539. This application Apr. 10, 1979, Ser. No. 28,750

Claims priority, application Japan, Dec. 29, 1976, 51/159609

Int. Cl.³ H03L *7/18*

U.S. Cl. 331—1 A **9 Claims**

1. A variable frequency synthesizer comprising:
a binary counter connected to a source of reference frequency signal for generating a first pulse with a duration corresponding to an integral multiple of the period of said reference frequency signal in response to a predetermined number of oscillations of said reference frequency signal;
a variable frequency oscillator;
a monostable device having a first input terminal connected to the output of said variable frequency oscillator and a second input terminal connected to said reference frequency source for generating a second pulse in response to each oscillation of the output signal from said variable frequency oscillator with a duration variable as a function of the period of said reference frequency signal;
a differential integrator connected to be responsive to said first and second pulses for generating a voltage signal representative of the difference in duty cycle between said first and second pulses for application to the input of said variable frequency oscillator; and
a variable resistance element having a manually adjustable, continuously variable resistance for varying said voltage

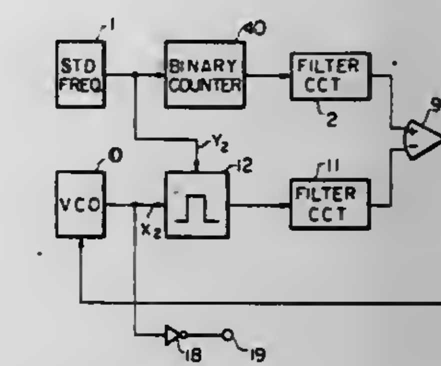

signal, whereby the output signal of said oscillator is continuously variable as a function of the resistance of said variable resistance element.

4,301,423

CIRCUIT FOR CONTROLLING THE FREQUENCY OF A PULSE GENERATOR ASSOCIATED WITH A MICROPROCESSOR

Arjen J. Mülder, Bingen, Fed. Rep. of Germany, assignor to NSM Apparatebau GmbH Kommanditgesellschaft, Bingen, Fed. Rep. of Germany

Filed Aug. 29, 1979, Ser. No. 70,876

Claims priority, application Fed. Rep. of Germany, Sep. 7, 1978, 2838969

Int. Cl.³ H03L *7/08*

U.S. Cl. 331—1 R **4 Claims**

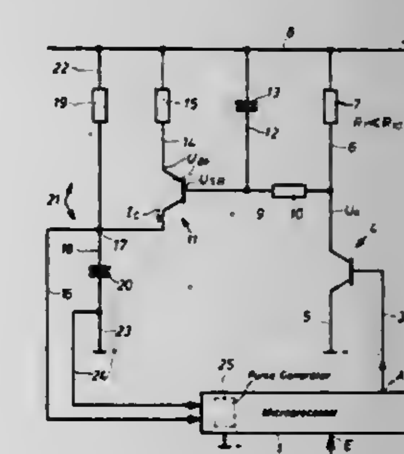

1. In a circuit for controlling the operation of a microprocessor which receives electric energy from an AC source, a combination comprising a pulse generator operatively connected to the microprocessor; and means for controlling the operating frequency of the pulse generator, including an RC-stage operatively connected to the pulse generator and including a resistor having a resistance value which is variable by a control signal issuing from the microprocessor and which results from a comparison of the pulse frequency with the AC-source frequency.

4,301,424
Patent Not Issued For This Number

4,301,425
XECL AVALANCHE DISCHARGE LASER EMPLOYING AR AS A DILUENT
Robert C. Sze, Santa Fe, N. Mex., assignor to The United States of America as represented by the United States Department of Energy, Washington, D.C.
Filed Oct. 10, 1979, Ser. No. 83,508
Int. Cl.^{3} H01S *3/22*
U.S. Cl. 331—94.5 G **4 Claims**

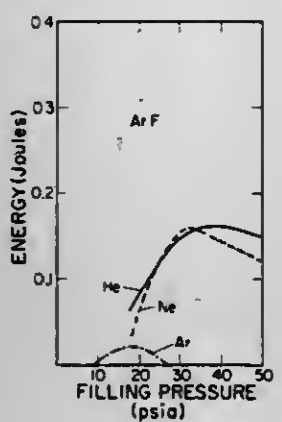

1. In a XeCl avalanche discharge exciplex laser, a gaseous lasing starting mixture comprising:
essentially Xe gas;
a chlorine donor;
Ar comprising the primary portion of diluent gas.

4,301,426
SOLID STATE LASER AND MATERIAL
Irwin Schneider, Alexandria, Va., assignor to The United States of America as represented by the Secretary of the Navy, Washington, D.C.
Filed Nov. 19, 1979, Ser. No. 95,683
Int. Cl.^{3} H01S *3/14*
U.S. Cl. 331—94.5 F **15 Claims**

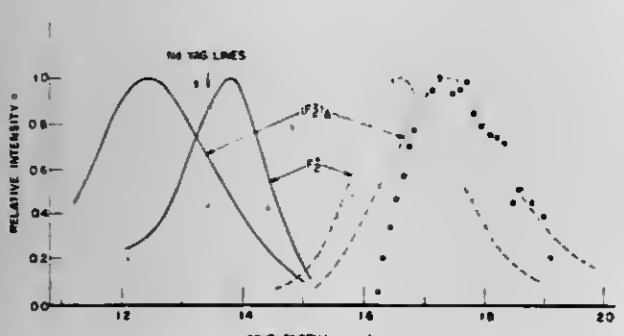

1. A laser material for a solid-state tunable laser which comprises an alkali halide crystal with at least one cation impurity selected from the class consisting of lithium, sodium, potassium, rubidium, cesium, calcium, strontium, and barium, said crystal having a crystalographic structure with point defects consisting essentially of $(F_2)_A$, $(F_2^+)_A$, F_A, F_B, F_A', and F_B' color centers in a state of dynamic equilibrium so that bleaching of $(F_2^+)_A$ centers is avoided.

4,301,427
ASTABLE MOS FET MULTIVIBRATOR
Yasoji Suzuki, Ayase, and Tetsuya Iida, Yokohama, both of Japan, assignors to Tokyo Shibaura Denki Kabushiki Kaisha, Tokyo, Japan
Division of Ser. No. 928,951, Jul. 28, 1978, abandoned. This application Mar. 12, 1980, Ser. No. 129,737
Claims priority, application Japan, Jul. 30, 1977, 52-91606; Feb. 13, 1978, 53-15237; Feb. 13, 1978, 53-15239
Int. Cl.^{3} H03K *3/354*
U.S. Cl. 331—111 **11 Claims**

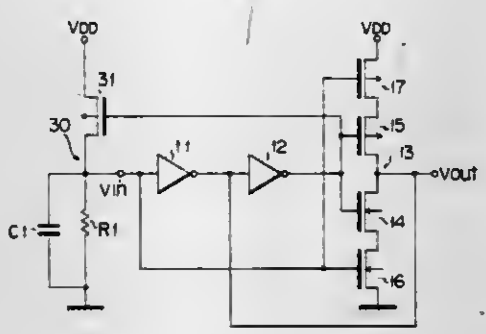

1. An astable multivibrator comprising first and second power supply terminals; a first inverter; a second inverter whose input terminal is connected to the output terminal of the first inverter; a third inverter including an inverter section which is formed of a MOS circuit and has input and output terminals respectively connected to the output and input terminals of said second inverter and MOS elements which are connected to both terminals of the conduction path of said MOS circuit between said first and second power supply terminals and whose gates are jointly connected to the input terminal of said first inverter; a time constant circuit for supplying a signal to the input of the first inverter; and switching means for actuating the time constant circuit in response to an output signal from the second inverter and permitting a signal having a prescribed frequency to be produced from the time constant circuit to the first inverter.

4,301,428
RADIO FREQUENCY INTERFERENCE SUPPRESSOR CABLE HAVING RESISTIVE CONDUCTOR AND LOSSY MAGNETIC ABSORBING MATERIAL
Ferdy Mayer, 18 Rue Thiers, 38000 Grenoble, France
Filed Sep. 26, 1979, Ser. No. 79,197
Claims priority, application France, Sep. 29, 1978, 78 27880
Int. Cl.^{3} H01P *1/22, 1/20, 3/00*
U.S. Cl. 333—12 **15 Claims**

1. An electric lossy element of the electric wire, cable or screen type, comprising:
at least one conductive element, said conductive element being a composite structure including a non-conductive core of the textile, plastic or glass type coated with a thin conductive metallic layer; and

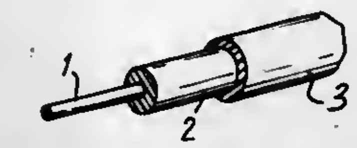

a magnetic absorbing mixture at least partially surrounding said at least one conductive element, said magnetic absorbing mixture being non-conductive.

4,301,429
MICROWAVE DIODE WITH HIGH RESISTANCE LAYER
Mark B. Goldman, Sudbury; Dana W. Kintigh, Acton, and Henri R. Chalifour, Methuen, all of Mass., assignors to Raytheon Company, Lexington, Mass.
Filed Jun. 7, 1979, Ser. No. 46,595
Int. Cl.^{3} H01P *1/15, 3/08*
U.S. Cl. 333—22 R **1 Claim**

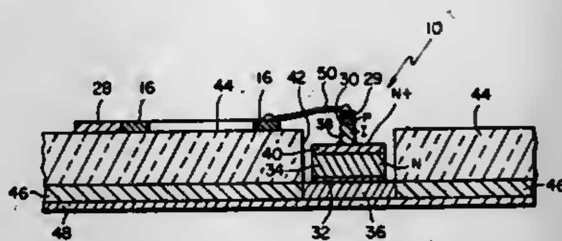

1. A microwave circuit comprising:
(a) a microwave transmission line having a predetermined impedance, such transmission line comprising a strip conductor and a ground plane conductor separated by a dielectric; and
(b) a monolithic semiconductor body comprising:
(i) a diode having a pair of semiconductor layers of opposite conductivity type; and
(ii) a resistive layer disposed adjacent one of the pair of layers, said resistive layer having a resistance matched to the predetermined impedance of the transmission line, said diode and resistive layer being serially connected to the strip conductor and the ground plane conductor, the resistive layer being disposed adjacent the ground plane conductor.

4,301,430
U-SHAPED IRIS DESIGN EXHIBITING CAPACITIVE REACTANCE IN HEAVILY LOADED RECTANGULAR WAVEGUIDE
Vitaly Stachejko, Willingboro, N.J., assignor to RCA Corporation, New York, N.Y.
Filed Sep. 12, 1980, Ser. No. 186,461
Int. Cl.^{3} H01P *1/19, 1/397, 1/00*
U.S. Cl. 333—24.1 **9 Claims**

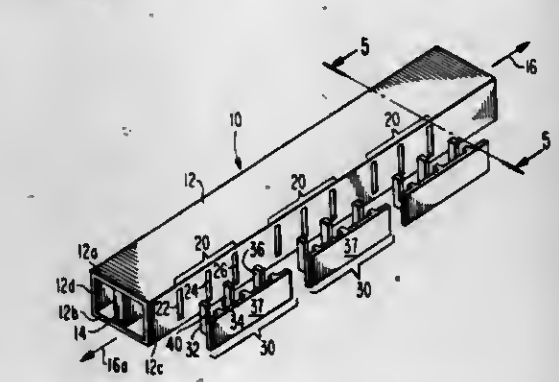

1. In combination:
an elongated rectangular waveguide adapted for propagating waves along its elongated axis and comprising a pair of oppositely disposed, parallel broad walls spaced by a pair of oppositely disposed, parallel relatively narrower walls;
a substantially U-shaped electrically conductive iris being oriented transverse to said elongated axis and having a base and a pair of substantially parallel legs each having a first end and a second end, said first ends of said legs merging into said base and said legs spaced apart at their second ends by a gap, said iris positioned in said waveguide with said legs extending parallel to said narrower walls and with said base extending parallel to said broad walls, said iris being further dimensioned and positioned so that said second ends of said legs are spaced from said broad walls.

4,301,431
MINIATURE DELAY LINE HAVING LOW DIRECT COUPLING
Jean Puyhaubert, St. Leu la Foret, and Clande Jacquemin, Paris, both of France, assignors to Thomson-CSF, Paris, France
Filed Mar. 25, 1980, Ser. No. 133,885
Claims priority, application France, Mar. 29, 1979, 79 07889
Int. Cl.^{3} H03H *9/36, 9/10, 9/125*
U.S. Cl. 333—141 **5 Claims**

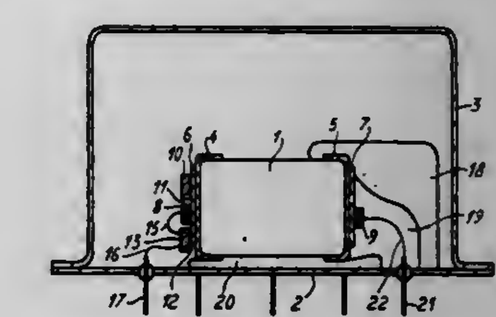

1. An electroacoustic delay line for providing focused multiple reflections comprising:
an elastic-wave propagation medium shaped so as to present two opposite faces;
an input transducer secured to one of said faces of said medium;
an output transducer;
a standardized semiconductor-component casing containing said delay line; and
at least one shielding element in electrical contact with said casing, said shielding element being comprised of a molded shell surrounding without any contact said output transducer and its connection to said casing, said shell being bonded to a conductive element for securing said medium to said casing, in contact with a connector-pin integral with said casing and maintained at a fixed potential.

4,301,432
COMPLEX RF WEIGHTER
Richard L. Carlson, Lake in the Hills, and Allen L. Davidson, Crystal Lake, both of Ill., assignors to Motorola, Inc., Schaumburg, Ill.
Filed Aug. 11, 1980, Ser. No. 176,892
Int. Cl.^{3} H01P *1/185, 1/22*
U.S. Cl. 333—164 **6 Claims**

1. A complex weighter for generating from an input RF signal of a given amplitude and phase an output RF signal differing from the input RF signal by a controllable amount in amplitude and phase, the complex weighter comprising:
a. a quadrature hybrid having an input port, an isolated port, a zero-degree port, and a 90-degree port;
b. a first PIN diode connected to the zero-degree port and to electrical ground;
c. a second PIN diode connected to electrical ground and through a one-eighth-wavelength line to the 90-degree port; and

d. means for biasing the first and second PIN diodes; whereby an RF signal of a given amplitude and phase ap-

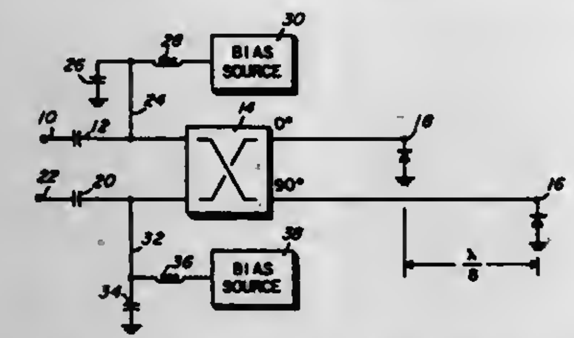

plied at the input port appears at the isolated port with a different amplitude and phase according to settings of the means for biasing.

4,301,433
CIRCUIT BREAKER ELECTRICAL CLOSURE CONTROL APPARATUS
Roger N. Castonguay, Terryville, and Charles L. Jencks, Avon, both of Conn., assignors to General Electric Company, New York, N.Y.
Filed Jun. 23, 1980, Ser. No. 162,278
Int. Cl.[3] H01H *73/02, 75/02*
U.S. Cl. 335—13 **10 Claims**

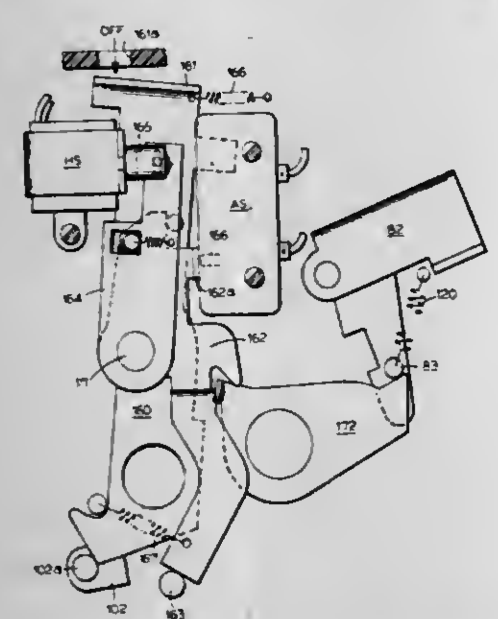

1. Apparatus for controlling the closure of a circuit breaker initiated by the action of a closing solenoid, said apparatus comprising, in combination:

A. a normally open breaker closure initiating switch;
B. a normally open arming switch connected in series with said closure switch, the closing solenoid and a source of electric current;
C. a holding solenoid electrically connected in shunt with said arming switch and having a plunger movable between a seated position and an extended position;
D. hook means for holding the breaker movable contacts in a hooked open position against the force of a charged breaker operating mechanism spring acting to drive the movable contacts to a closed position, the closing solenoid being operatively coupled with said hook means such that electrical energization thereof activates said hook means to release the movable contacts from their hooked open position;
E. a first member mounted for movement between an OFF position assumed in response to the movable contacts being in either their tripped open position, assumed when the mechanism spring is discharged, or their hooked open position and an ON position assumed in response to the movable contacts being in their closed position;
F. an arming switch actuating member mounted for movement between a switch actuating position and a switch deactuating position, said switch actuating member assuming its deactuating position in response to the movable contacts being in their tripped open position and in response to said first member being in its ON position, and said switch actuating member assuming its actuating position to close said arming switch in response to said movable contacts being in their hooked open position, p2 (1) whereby, with said switch actuating member in its actuating position, closure of said breaker closure initiating switch completes an energization circuit for the closing solenoid through said arming switch to activate said hook means and thus release the movable contacts from their hooked open positions; and
G. a second member pinned to said holding solenoid plunger and movable between a first position effective to dispose said plunger in its seated position and a second position effective to dispose said plunger in its extended position, said switch actuating member acting to position said second member to its first position as it assumes its switch deactuating position, and said second member acting on said switch actuating member to hold it away from its switch actuating position while said solenoid is energized to magnetically hold said plunger in its seated position by virtue of sustained closure of said breaker closure initiating switch,

G. (continued)

(1) whereby to preclude multiple activations of said hook means by the closing solenoid due to sustained closure of said breaker closure initiating switch.

4,301,434
UNDERVOLTAGE RELEASE RESET AND LOCKOUT APPARATUS
Roger N. Castonguay, Terryville, Conn., assignor to General Electric Company, New York, N.Y.
Filed Jun. 23, 1980, Ser. No. 162,271
Int. Cl.[3] H01H *73/00, 75/02, 83/00*
U.S. Cl. 335—20 **8 Claims**

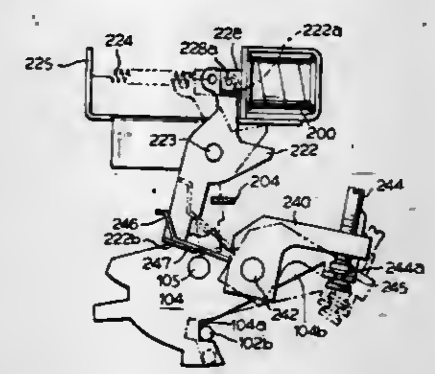

1. Undervoltage Release apparatus for a circuit breaker having a spring-powered operating mechanism for motivating movable contacts between a tripped open position and a closed position, hook means for holding the movable contacts in an intermediate hooked open position against the force of the charged operating mechanism acting to propel the movable contacts to their closed position, and a trip latch assembly for releaseably holding the operating mechanism in its charged condition; said apparatus comprising, in combination:

A. an undervoltage release solenoid having a plunger movable between seated and extended positions;
B. a return spring biasing said plunger to its extended position;
C. an elongated trip lever pivotally mounted intermediate its ends, said lever connected adjacent one of its ends with said plunger for retention in an inactive position by the magnetic force developed by said solenoid due to electrical energization in response to normal line voltage levels to maintain said plunger in its seated position against the

bias of said return spring, said return spring propelling said plunger to its extended position and said lever to a trip initiating position effective in conditioning the trip latch assembly to discharge the operating mechanism and cause the movable contacts to spring to their tripped open position when the line voltage falls to an abnormally low level; and
D. lockout means releaseably engaging the other end of said trip lever to latch same in its inactive position against the bias of said return spring, said lockout means controllably coupled with the hook means such as to unlatch said trip lever from its inactive position incident to initial articulation of the hook means leading to the release of the movable contacts from their hooked open position, whereby, with the existence of an abnormally low line voltage condition, said trip lever assumes its trip position to precipitate discharge of the operating mechanism before the movable contacts are fully released from their hooked open position.

4,301,435
FLUX SHIFTER RESET ASSEMBLY
Roger N. Castonguay, Terryville, and Jon P. McCuin, Bristol, both of Conn., assignors to General Electric Company, New York, N.Y.
Filed Jun. 23, 1980, Ser. No. 162,280
Int. Cl.[3] H01H *9/20, 73/02, 83/00*
U.S. Cl. 335—26 **10 Claims**

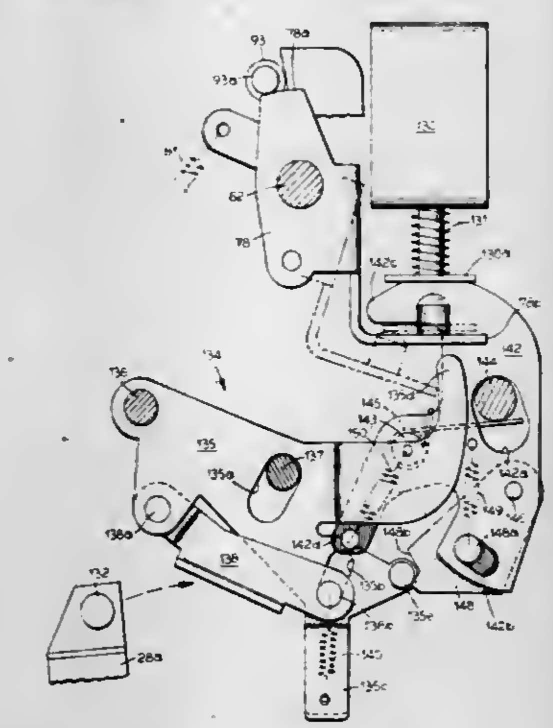

1. A flux shifter reset assembly for reliably reseating the plunger of a flux shifter-type trip solenoid from its circuit breaker trip initiating extended position, said assembly comprising, in combination:

A. an activating element mounted for movement with the breaker movable contact assemblies between first, second and third positions as the movable contact assemblies swing between closed, hooked open and tripped open positions, respectively;
B. a reset lever mounted for pivotal movement between a de-actuated position and an actuating position, said reset lever including a projection disposed to engageably restore the trip solenoid plunger from its extended position to its reseated position as said reset lever is propelled from its de-actuated position to its actuated position;
C. an elongated actuating arm pivotally mounted adjacent one end to said reset lever; and
D. means resiliently driving coupling the other end of said actuating arm to said reset lever, with said reset lever in its de-actuated position, said actuating arm disposed to be engaged by said activating element as it moves from its first position toward its second position such as to rotate said reset lever and actuating arm as a unit about the reset arm pivotally mounting, said reset lever achieving its fully actuated position to reseat the trip solenoid plunger prior to the arrival of said activating element at its second position, with movement of said activating element on to its third position, said drive coupling means simultaneously yielding to accommodate overtravel pivotal movement of said actuating arm about its pivotal mounting with said reset lever and applying a resilient force holding said reset lever in its actuated position.

4,301,436
CIRCUIT BREAKER HOOK APPARATUS
Roger N. Castonguay, Terryville, and Charles L. Jencks, Avon, both of Conn., assignors to General Electric Company, New York, N.Y.
Filed Jun. 23, 1980, Ser. No. 162,279
Int. Cl.[3] H01H *9/20, 73/12*
U.S. Cl. 335—166 **11 Claims**

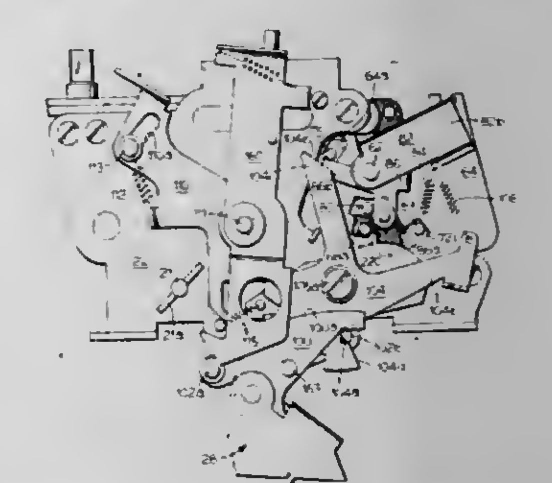

1. Hook apparatus for releasably holding the movable contacts of a circuit breaker in a hooked open position against the force of a charged mechanism spring acting to propel the movable contact assemblies to a closed position; said hook apparatus comprising, in combination:

A. a hook cam carried by the movable contact assemblies;
B. an intermediate hook in the form of a lever pivotally mounted intermediate its ends for movement between hooking and unhooking positions;
C. a hook pin mounted adjacent one end of said lever;
D. a latch pin mounted adjacent the other end of said lever; and
E. a primary hook mounted for movement between latching and unlatching positions, said primary hook including latching means for engaging said latch pin to latch said lever in its hooking position such as to fixedly position said hook pin in interfering relation with the edge of said hook cam and thus intercept and hold the movable contact assemblies in their hooked open position, upon movement of said primary hook to its unlatching position, said latching means disengages said latch pin, freeing said lever for movement to its unhooking position and releasing the movable contact assemblies from their hooked open position.

4,301,437
IMPEDANCE COIL CORE
Gustav Preininger, Graz, Austria, assignor to Elin-Union Aktiengesellschaft, Vienna, Austria
Filed Dec. 11, 1979, Ser. No. 102,329
Claims priority, application Austria, Dec. 12, 1978, 8827/78
Int. Cl.[3] H01F *27/08, 17/04*
U.S. Cl. 336—60 **3 Claims**

1. In a coil, particularly in an impedance coil, of the type including a core having a plurality of core legs, each consisting

of individual cylindrical laminated assemblies including radially extending sheet metal elements, and separated from one another by non-magnetic spacing layers, and yokes extending between the core legs in an assembled condition of the core, and wherein the yokes and the core legs are provided with aligned recesses for accomodating tensioning bolts pressing the yokes against the core legs in the assembled condition, the

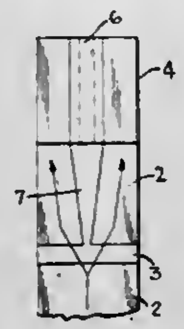

improvement wherein the laminated assemblies of the respective core legs which adjoin said yokes include non-magnetic wedge-shaped intermediate layers diverging toward the adjacent yokes, and said yokes include non-magnetic intermediate layers, said wedge-shaped and said intermediate layers being arranged at the central area of said core which is provided with said recesses.

4,301,438
ADJUSTABLE FORCE PRODUCING MEANS FOR MANUALLY MOVABLE CONTROL LEVERS IN A SPACE THERMOSTAT
Jerry W. McElroy, St. Louis, Mo., assignor to Emerson Electric Co., St. Louis, Mo.
Filed Nov. 13, 1979, Ser. No. 93,793
Int. Cl.³ H01H *37/12*
U.S. Cl. 337—339 **1 Claim**

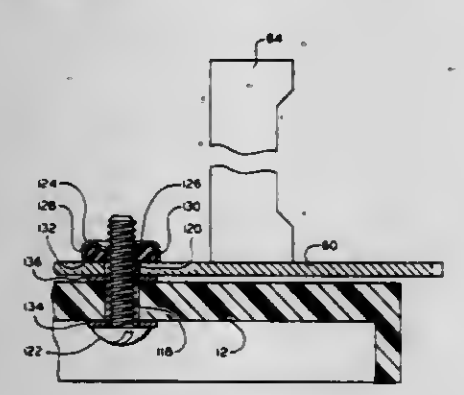

1. In a space thermostat having a manually movable temperature set-point control lever, an improved means for producing an adjustable holding force on the lever, which holding force determines the amount of force which must be applied to the lever to effect manual movement thereof, wherein the improvement comprises:
a thermostat casing having an elongated slot underlying the lever;
a screw extending through said slot and through an opening in said lever;
a hollow, rigid, thin-walled nut having a recess therein defined by a base for threadedly engaging said screw and an outer wall extending away from said base;
a compressible anchor ring radially confined in said recess by said outer wall and axially extending, when in an uncompressed state, beyond an edge of said outer wall; and
means cooperative with opposed sides of said casing and through which said screw extends for determining the value of a sliding friction force between said lever and said casing,
said ring being compressible in response to threading of said screw to said nut an amount causing said ring to axially extend a lesser amount beyond said edge of said outer wall than when in said uncompressed state and to remain radially confined in said recess for producing a clamping force between said lever and
said casing and a resulting sliding friction force therebetween sufficient to render said lever stable in a set-point position and manually movable, upon application of a sufficient force thereto, to a different set-point position,
said ring being further compressible to a locked position in response to further threading of said screw to said nut wherein said ring no longer axially extends beyond said edge of said outer wall, and a force clamping said lever and said casing together is exerted by said nut and results in a sliding friction force between said lever and said casing which is sufficiently great to prevent manual movement of said lever.

4,301,439
FILM TYPE RESISTOR AND METHOD OF PRODUCING SAME
Gary W. Johnson, South Norwalk, and David G. Hilson, Norwalk, both of Conn., assignors to Electro Materials Corp. of America, Mamaroneck, N.Y.
Filed Dec. 26, 1978, Ser. No. 972,793
Int. Cl.³ H01C *10/00*
U.S. Cl. 338—195 **4 Claims**

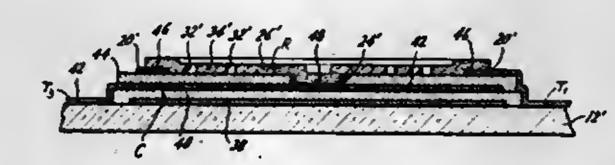

1. A resistor adapted to be integrally formed with at least one other electrical network component on a planar substrate, said resistor comprising a first conductive terminal coupled to said at least one other component, a second conductive terminal, a first layer of insulative material intermediate said first and second terminals for supporting said second terminal, said first layer having an opening therein overlaying said first terminal, and a second layer of resistive material extending over said first layer, said resistive material being coupled to said first terminal through said opening thereby defining a first terminal area on said second layer, and to said second terminal thereby defining a second terminal area on said second layer, wherein a desired network parameter is obtained when said resistive material is removed from said second layer over a convoluted path surrounding said first terminal area to define a corresponding resistive path of sufficient length along said second layer to obtain said desired parameter.

4,301,440
LEVEL DETECTING DEVICE
Hitoshi Kobota, Fujisawa; Yoshihiro Hayashida, Chigasaki, and Hironori Kutsuma, Kawasaki, all of Japan, assignors to Nissan Motor Co., Ltd., Yokohama and Tokico Ltd., Kawasaki, both of, Japan
Filed Nov. 20, 1979, Ser. No. 96,200
Claims priority, application Japan, Dec. 5, 1978, 53/150919
Int. Cl.³ H01H *35/18*
U.S. Cl. 340—59 **10 Claims**

1. A level detecting device comprising:
a detector positioned in a reservoir having an opening and for detecting the level of oil liquid in the reservoir,
a cylindrical portion projecting from said reservoir around said opening,
a flange projecting radially outward from the cylindrical portion, said flange having several cut-off portions,
a cap comprising a cylindrical body having a slightly larger inner diameter than the outer diameter of the flange and a covering portion projecting laterally and integrally from said cylindrical body, said covering portion fixedly equipped with terminals connected to lead wires from the detector, the cap having the same number of pawls as the cut-off portions formed in the flange of said cap to engage said flange, said pawls projecting radially inward from the

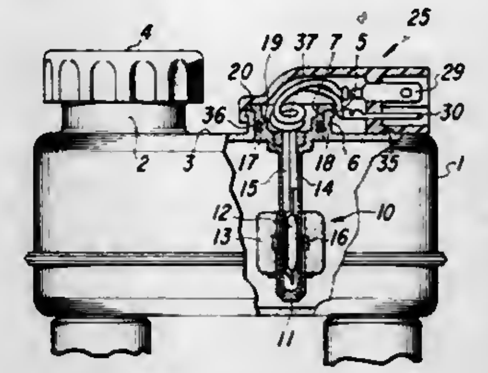

inner surface of the cylindrical body of the cap, whereby said cap is attached to the reservoir for covering the opening by rotating the cap.

4,301,441
ALARM AND ANTITHEFT SYSTEM FOR AN AUTOMOTIVE VEHICLE
Benjamin Baxter, P.O. Box 215, Fowler, Calif. 93625
Filed Jul. 18, 1980, Ser. No. 169,992
Int. Cl.³ B60R *25/04, 25/10*
U.S. Cl. 340—64 **10 Claims**

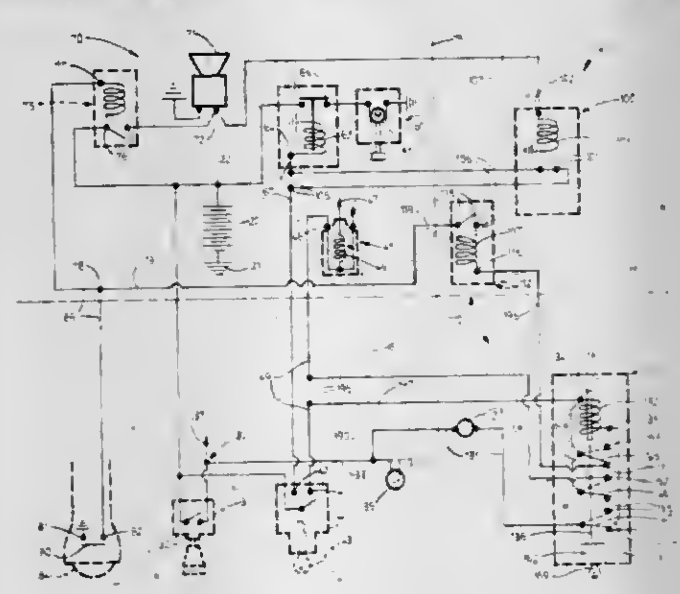

1. An alarm and antitheft system for an automotive vehicle equipped with a source of electrical energy, a starter motor, a solenoid which connects the motor to the source when the solenoid is electrically energized therefrom, a switch provided with a starting terminal and adapted selectively to energize the terminal from the source, an electrically energizable warning device, and a warning switch selectively actuatable to energize the warning device from the source, the alarm and antitheft system comprising:
A. first switching means having a control terminal and being electrically connected between the starting terminal and the solenoid for opening electrical connection between the starting terminal and the solenoid when the control terminal is energized and for closing such electrical connection when the control terminal is de-energized;
B. second switching means connected in parallel with the warning switch for providing an alarm condition wherein the warning switch is bypassed, energizing the warning device when the warning switch is not actuated, and for providing a running condition wherein the warning switch is not so bypassed; and
C. a conductor electrically connecting the warning device and the control terminal so that in the alarm condition, the control terminal is energized from the warning device, opening electrical connection between the starting terminal and the solenoid so that the motor is not energized from the source when the starting terminal is energized therefrom.

4,301,442
VEHICULAR ANTI-THEFT DEVICE
Robert E. Croissant, 34 Forestwood Dr., Woodstock, N.Y.
Filed Sep. 24, 1980, Ser. No. 190,482
Int. Cl.³ G08B *13/00*
U.S. Cl. 340—64 **11 Claims**

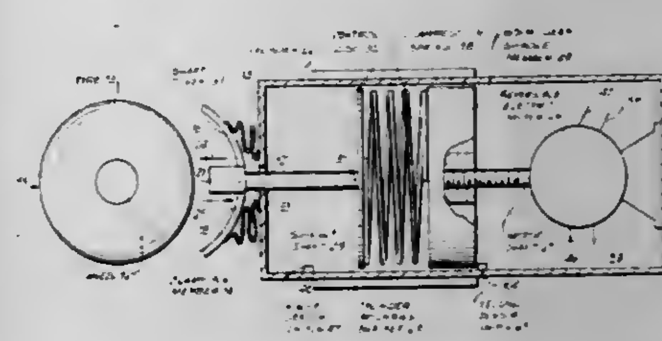

1. A vehicular anti-theft device for an automotive vehicle having an engine, a battery, an ignition system for the engine, the ignition system including an ignition switch for energizing said ignition system when turned ON and deenergizing said ignition system when turned OFF, a wheel and an inflated tire mounted on the wheel, said vehicular anti-theft device comprising
clamping means for clamping the tire of a vehicle under pressure to prevent rotation of the wheel on which said tire is mounted;
actuating means mounted on the vehicle and coupled to said clamping means for selectively moving said clamping means onto said tire to clamp said tire and away from said tire to release said tire; and
control means mounted in the vehicle and coupled to said actuating means and including the ignition switch of said vehicle for controlling the operation of said actuating means to clamp said tire when said ignition switch is turned OFF and releasing said tire upon the provision of a predetermined code indication.

4,301,443
BIT ENABLE CIRCUITRY FOR AN IMAGE ANALYZER SYSTEM
Stanley R. Sternberg, and Robert M. Lougheed, both of Ann Arbor, Mich., assignors to Environmental Research Institute of Michigan, Ann Arbor, Mich.
Filed Sep. 10, 1979, Ser. No. 73,817
Int. Cl.³ G06K *9/12*
U.S. Cl. 340—146.3 MA **10 Claims**

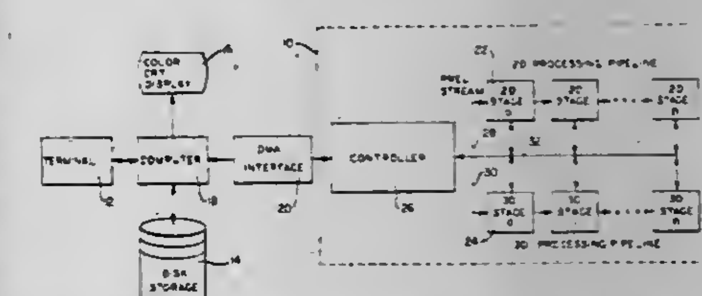

1. In a system for analyzing images made up of a matrix of points, with each point being represented by a multibit digital data signal, said system including a chain of transformation stages for transforming said data signals into a new value depending upon the values of neighboring points in the image, the improvement comprising:
means for selectively disabling the transformation of particular bits in the digital signals for a given stage such that said

particular bits pass unmodified in value to a succeeding stage in the chain.

4,301,444

APPARATUS FOR DETECTING POSSIBLE DEFEAT OF SYSTEMS FOR REMOTE METERING OF UTILITIES

Eugene J. Brackert, Arlington Heights, and Morgan H. Cooper, Crystal Lake, both of Ill., assignors to Motorola, Inc., Schaumburg, Ill.

Filed Oct. 19, 1979, Ser. No. 86,544

Int. Cl.[3] **H04Q** *9/00*

U.S. Cl. 340—870.02 **11 Claims**

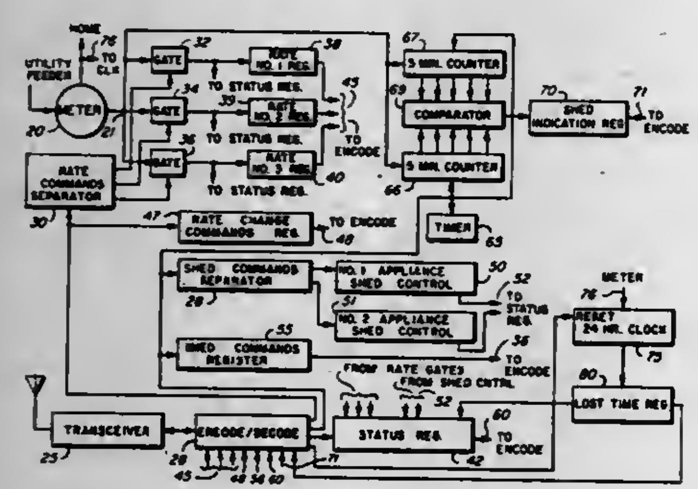

1. In a remotely readable, automatic utility metering system of the type including a plurality of rates and apparatus for indicating the amount of the utility consumed at each rate, and shed controlled appliances with shed commands and rate change commands being issued from a remote central reading station, apparatus for monitoring the metering of the utility comprising a plurality of event registers each connected for storing the number of occurrences of a different event in a predetermined period of time and means for determining the stored number of occurrences at the central reading station.

4,301,445

COMMUNICATION SYSTEM AND METHOD HAVING WIDE DYNAMIC RANGE DIGITAL GAIN CONTROL

Paul B. Robinson, Durham, N.H., assignor to General Electric Company, Somersworth, N.H.

Filed Dec. 10, 1979, Ser. No. 101,450

Int. Cl.[3] **H04B** *1/16*; **H04Q** *9/00*

U.S. Cl. 340—825.54 **10 Claims**

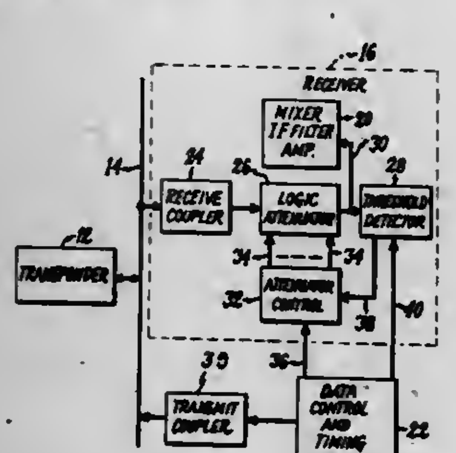

5. An automatic gain control system comprising:
(a) a transponder for generating output signals in response to an interrogation signal;
(b) a receiver in communication with said transponder and receiving therefrom said output signals, said receiver comprising,
(1) control and timing means for providing said interrogation signal to said transponder to effect the generation of the output signals therefrom, while further providing clock signals and first and second control signals for said receiver prior to receipt of the output signals from said transponder by said receiver,
(2) a counter responsive to said first control signal from said control and timing means for presetting said counter to a prescribed count, said counter further having an input for counting pulses and responsive thereto to provide binary output signals representative of counter output states,
(3) an amplifier
(4) a logic attenuator having an input for receiving the output signals from said transponder and an output for coupling the output signals to said amplifier, said logic attenuator being coupled to said counter and responsive to the binary output signals therefrom whereby the amplitude of the output signals coupled to said amplifier are attenuated by said logic attenuator in accordance with the output states of said counter,
(5) a threshold detector including amplitude detector means coupled to the output of said logic attenuator and having switch means responsive to the clock signals from said control and timing means for periodically coupling the output signals from said logic attenuator to said threshold detector to periodically effect the generation of an output count control signal from said threshold detector when the amplitude of the output signals from said logic attenuator exceed a predetermined reference level as detected by said threshold detector, and
(6) means responsive to said output count control signal from said threshold detector and to said clock signals and to the second control signal from said control and timing means for providing said pulses to the input of said counter to effect a change in the output states thereof to control said logic attenuator to maintain the amplitude of the signals applied to said amplifier substantially constant to linearly control the gain of said receiver.

4,301,446

DIGITAL TRANSMISSION SYSTEM WITH A DOUBLE ANALOG INTEGRATOR DELTA SIGMA CODER AND A DOUBLE DIGITAL INTEGRATOR DELTA SIGMA DECODER

Jean-Pierre Petit, 16, rue le Peletier, Treguier, France 2220

Filed Jul. 17, 1980, Ser. No. 170,043

Claims priority, application France, Jul. 20, 1979, 79 18862

Int. Cl.[3] **H03K** *13/02*

U.S. Cl. 340—347 AD **6 Claims**

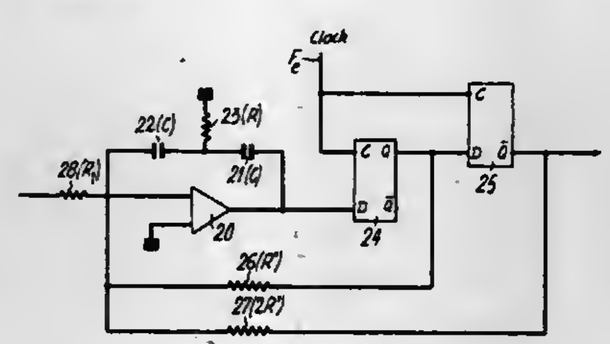

1. In an analog to PCM coding and a PCM to analog decoding system, a Delta-Sigma noise-shaping codec operating at a sampling rate of substantially 2 MHz, said codec comprising:
a Delta-Sigma noise-shaping coder including a single operational amplifier;
an adding means receiving an analog signal and connected to said operational amplifier;
two analog integrators in the feedback loop of said operational amplifier;
a first and second cascaded flipflops operated at said sampling rate;
a first resistor means connecting the output of said first flipflop to said adding means;
a second resistor means connecting the output of said second flipflop to said adding means; and
output means connected to said second flipflop; and
a Delta-Sigma decoder including two digital integrators;
an adding means receiving a digital signal coded by said coder and connected to said digital integrators;
a first and second cascaded flipflops operating at said sampling rate;
a first amplifier means connecting the output of said first flipflop to said adding means;
a second amplifier means connecting the output of said second flipflop to said adding means; and
output means connected to said second flipflop.

4,301,447

SCAN CONTROL FOR LIGHT BEAM POSITION INDICATOR

Buddy K. Funk, Bountiful, and David M. Fowler, III, West Jordan, both of Utah, assignors to Sperry Corporation, New York, N.Y.

Filed Dec. 12, 1979, Ser. No. 102,690

Int. Cl.[3] **G08C** *21/00*

U.S. Cl. 340—365 P **12 Claims**

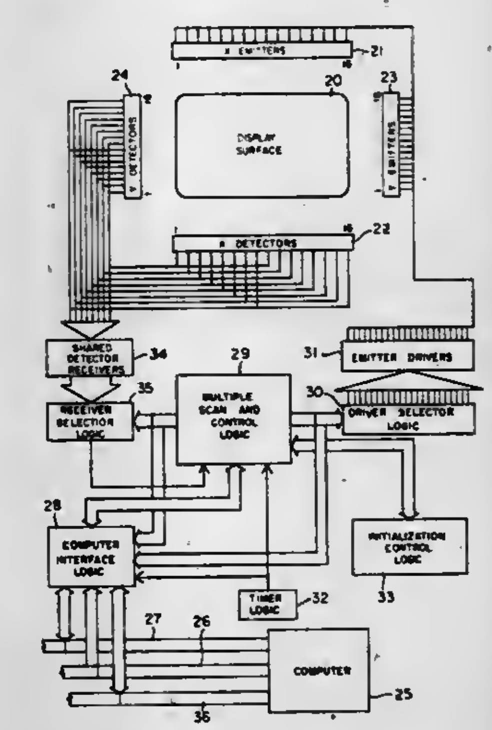

1. In a scanning system for scanning a display surface with light beams, including a plurality of paired light emitting sources and light detectors positioned adjacent respective opposite orthogonal edges of a display surface and means for sequentially activating said emitting sources to scan said display surface with light beams emitted by said sources, the improvement comprising:
means operable during the time each of said sources is activated for sequentially activating in a predetermined order a plurality of oppositely positioned ones of said detectors;
means responsive to the interruption of the beam of light between said activated source and said plurality of detectors for producing signals identifying said activated source and in sequence the ones of said plurality of detectors detecting an interruption of light; and
means for transmitting said signals in sequence.

4,301,448

GONG STRIKING MECHANISM

Tadashi Ishii, c/o Kobishi Electric Co., Ltd. No. 4-6, Kaminakazato 3-chome, Kita-ku, Tokyo, Japan

Filed Apr. 22, 1980, Ser. No. 142,707

Int. Cl.[3] **G10K** *1/065*

U.S. Cl. 340—392 **1 Claim**

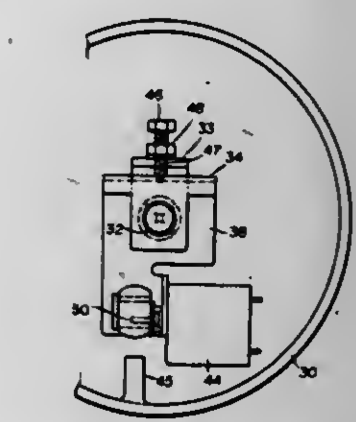

1. A gong striking mechanism comprising:
an electric motor mounted on a frame within a gong, said motor having a shaft, said shaft rotatably engaging an eccentric collar, and a hollow hammer having an outer surface adjacent to said gong and an inner surface disposed around said eccentric collar and spaced apart from said collar to absorb impact force and produce improved gong volume when the motion of the shaft, eccentric collar and hammer causes the outer surface of said hammer to strike the gong.

4,301,449

CONTROL PANEL

Charles A. Fitzgerald, Stone Mountain, Ga., assignor to Fitzgerald Engineering Company, Inc., Tucker, Ga.

Filed Dec. 7, 1978, Ser. No. 967,111

Int. Cl.[3] **G08B** *25/00*

U.S. Cl. 340—525 **12 Claims**

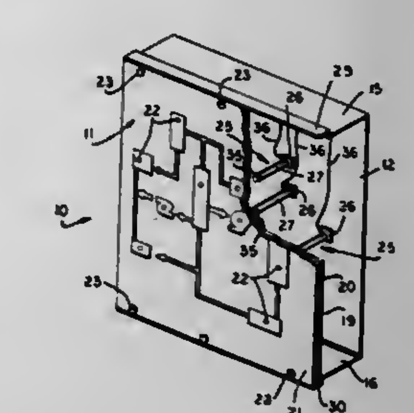

1. A control panel for controlling conditions of a process or the like, and including a display panel with indicia displayed thereon, the combination therewith comprising:
at least one trigger zone indicated on the display panel; and
at least one control means positioned behind said display panel and not extending through the display panel, said control means being selectably movable behind the display panel and positionable in an infinite number of locations relative to said display panel, each said control means including switch means sensitive to the presence of an object at said trigger zone of the display panel for creating a control signal in response to the presence of an object at said trigger zone.

4,301,450
ERROR DETECTION FOR MULTI-SEGMENTED INDICIA DISPLAY
Gerald D. Smoliar, Erdenheim, Pa., assignor to Burroughs Corporation, Detroit, Mich.
Filed Feb. 4, 1980, Ser. No. 118,626
Int. Cl.³ G09G *3/04*
U.S. Cl. 340—715 12 Claims

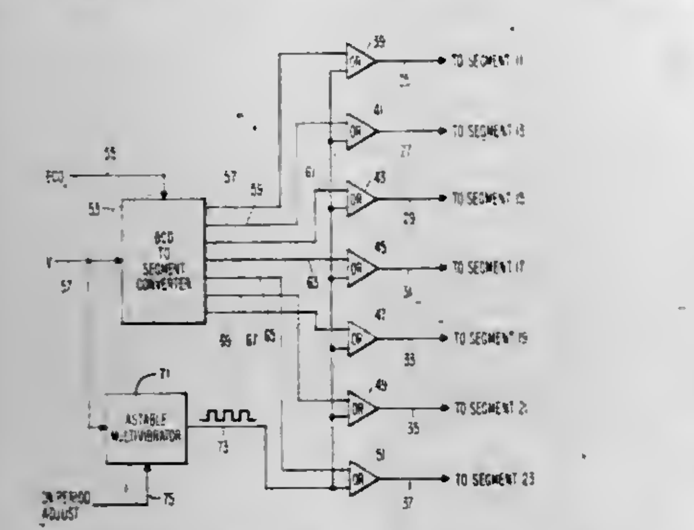

1. In an indicia display having a plurality of illuminable segments, an error detection illuminating apparatus comprising:

input means carrying coded signals representing data to be displayed;

a plurality of logical OR circuits, each logical OR circuit individually associated with and driving a single segment in said plurality of illuminable segments;

signal generator means for providing every logical OR circuit in said plurality thereof with a pulsed voltage signal;

converter means responsive to said input means for providing selected logical OR circuits in said plurality thereof with a constant level voltage signal;

whereby selected segments of said plurality of illuminable segments associated respectively with said selected logical OR circuits receive concurrently said constant level voltage signal and said pulsed voltage signal and the nonselected segments of said plurality of illuminable segments receive only said pulsed voltage signal.

4,301,451
ERASURE METHOD FOR MEMORY-TYPE EL DISPLAY DEVICES
Gary S. Barta, Portland, Oreg., assignor to Tektronix, Inc., Beaverton, Oreg.
Filed Dec. 4, 1979, Ser. No. 100,170
Int. Cl.³ H05B *37/00*
U.S. Cl. 340—781 8 Claims

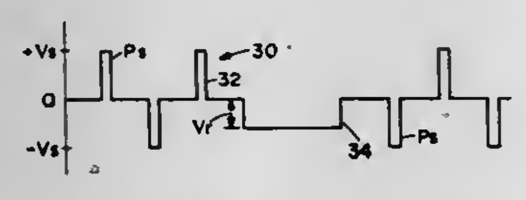

1. A method of operating an electroluminescent device exhibiting voltage/luminance hysteresis, said device comprising an active layer of electroluminescent material, first and second electrodes of conductive material, each electrode being disposed opposite a different face of the active layer, and first and second dielectric layers separating and insulating said electrodes from the active layer, said method comprising the steps of:

(a) applying a sustaining voltage signal to the active layer through said electrodes, said signal including alternating polarity pulses having an amplitude sufficient to bias the device into its region of voltage/luminance hysteresis,

(b) discontinuing application of the sustaining signal,

(c) applying an erase pulse that reduces the active layer's internal electric field to a level such that reapplication of the sustaining voltage signal will cause luminescent regions of the device to be extinguished, said pulse having (i) an amplitude not exceeding that of the sustaining signal, (ii) a duration greater than that of the individual pulses in said sustaining signal, and (iii) a polarity opposite that of the last preceding pulse of said signal, and

(d) reapplying the sustaining signal.

4,301,452
STATION WATCH ALARM SYSTEM
Lawrence F. Anderson, 14272 Wicks Blvd., San Leandro, Calif. 94577
Continuation-in-part of Ser. No. 680,685, Apr. 27, 1976. This application Mar. 26, 1979, Ser. No. 23,691
Int. Cl.³ G01S *13/00, 3/02*
U.S. Cl. 343—5 EM 5 Claims

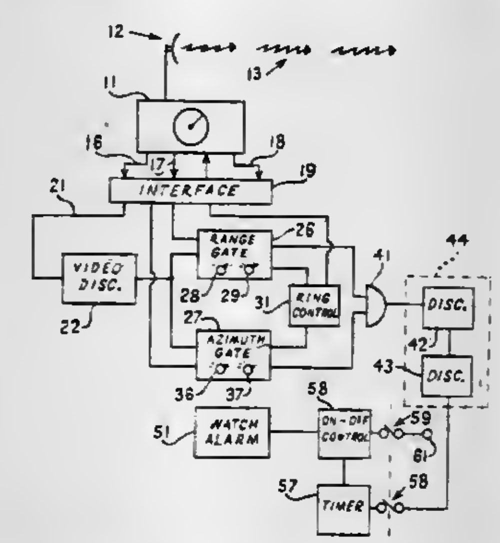

1. An automatic station watch system adapted for use with a radar system producing echo signals containing information relative to bearing and range of targets reflecting transmitted radar pulses an having a display scope upon which echo signals are displayed as to range and azimuth comprising

a variable range gate having an adjustable inner and outer ranges for setting a range zone adapted for connection to said radar system for producing output signals only upon receipt of echo signals from targets within said range zone;

a variable azimuth gate having adjustable bearing limits for setting an azimuth sector and adapted for connection to said radar system for producing output signals only upon receipt of signals from targets within said sector,

means applying signals representing the adjusted inner and outer ranges of said range gate within the bearing limits of said azimuth gate to said radar system for display as lines outlining a station zone on said display scope normally encompassing a predetermined station target,

a target verification discriminator connected to receive output signals from said variable range gate and said variable azimuth gate for producing output signals only upon a coincidence of input signals, and

an alarm circuit including an alarm signal generator and control means responsive to the absence of discriminator output signals for operating said alarm signal generator to produce alarm signals.

4,301,453
RADAR DEVICE FOR SIMULTANEOUSLY MEASURING DISTANCE AND RELATIVE SPEED
Günter Neininger, Ludwigsburg, and Bernard Hahn, Stuttgart, both of Fed. Rep. of Germany, assignors to International Standard Electric Corporation, New York, N.Y.
Filed Dec. 31, 1979, Ser. No. 108,637
Claims priority, application Fed. Rep. of Germany, Jan. 11, 1979, 2900825
Int. Cl.³ G01S *13/58*
U.S. Cl. 343—9 R 5 Claims

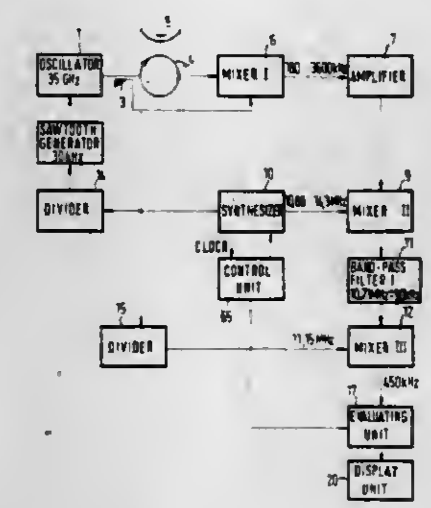

1. In a radar system employing transmission of a sawtooth frequency-modulated signal and including apparatus for measurement of distance and relative speed to targets within a range to be monitored, said system including a first mixer and first source of local oscillator signal therefor, to generate a beat signal between a received signal and said frequency modulated transmission signal comprising:

first means for up-converting said beat signal to a first intermediate frequency range, said first means including a second mixer and a source of second local oscillator signal changing cyclically in steps within a period corresponding to the period of said modulating sawtooth, each step of said second local oscillator corresponding to a discrete range element within said range to be monitored, and a band-pass filter connected to the output of said second mixer the passband of said filter being substantially that of the frequency change during each of said local oscillator steps;

second means including a plurality of third mixer circuits each response to the output signals of said first means filter and to a corresponding one of a plurality of third local oscillator sources, said third local oscillator sources each providing a discrete frequency, said frequencies differing from each other by a fraction of the passband of said first means filter;

third means comprising plurality of second band-pass filters of substantially equal electrical characteristics, one of said second filters being connected to the output of each of said third mixers, each of said second filters having a pass-band corresponding to the expected doppler shift about its center frequency;

fourth means having a single output and being responsive to the outputs of said second filters to select the output signal of the one of said second filters having the greatest amplitude and to transmit said greatest amplitude signal to said single output;

and fifth means for determining the frequency of said greatest amplitude signals for correspondingly determining said relative speed.

4,301,454
CHANNELIZED RECEIVER SYSTEM
Donald E. Bailey, Newbury Park, Calif., assignor to Bunker Ramo Corporation, Oak Brook, Ill.
Filed Nov. 30, 1979, Ser. No. 98,883
Int. Cl.³ G01S *7/36*; G01R *23/165*
U.S. Cl. 343—18 E 19 Claims

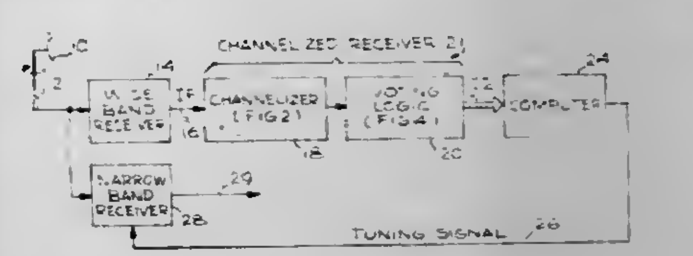

1. A channelized receiver for determining the frequency of a received rf signal, the frequency being within a predetermined search bandwidth, comprising:

a plurality of filter means each of which has a passband covering a portion of said predetermined search bandwidth, said plurality of filter means being divided into a first group and a second group of filter means, each group containing filter means defining alternate portions of said predetermined search bandwidth with respect to the filter means of the other group;

splitting means for dividing said received rf signal into first and second portions;

first means for applying said rf signal first portion to said first group of filter means;

second means for applying said rf signal second portion to said second group of filter means;

first means for determining the filter means in said first group having the highest amplitude output signal, said signal being designated as a first output signal;

second means for determining the filter means in said second group having the highest amplitude output signal, said signal being designated as a second output signal; and

comparison means for determining an amplitude relationship between said first and second output signals, said amplitude relationship being related to the frequency of said received rf signal.

4,301,455
GROUNDSPEED MEASUREMENT SYSTEM
Forrest G. Yetter, Alexandria, Va., assignor to United States of America, Washington, D.C.
Filed Oct. 17, 1979, Ser. No. 85,664
Int. Cl.³ G01S *1/44*
U.S. Cl. 343—106 D 12 Claims

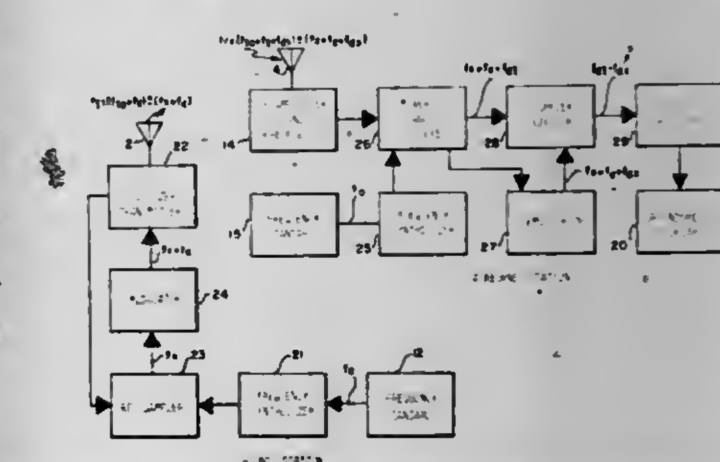

1. A method of measuring the motion of a receiving station relative to a transmitting station, comprising:

generating electromagnetic energy in the radio frequency spectrum at the transmitting station;

radiating said energy;

detecting said energy at the receiving station;

heterodyning said detected energy at said receiving station to generate a first reference frequency;
synthesizing a second reference frequency at said receiving station which has a value equal to said first reference frequency when there is no relative motion between said transmitting station and said receiving station;
mixing said first reference frequency with said second reference frequency to isolate a Doppler frequency; and
processing said Doppler frequency to generate a signal having a value that is functionally related to said relative motion.

4,301,456
ELECTROMAGNETIC WAVE ATTENUATING SURFACE
Edward Lovick, Jr., Northridge, Calif., assignor to Lockheed Corporation, Burbank, Calif.
Filed Jun. 27, 1979, Ser. No. 52,608
Int. Cl.³ H01Q *1/52*
U.S. Cl. 343—708 14 Claims

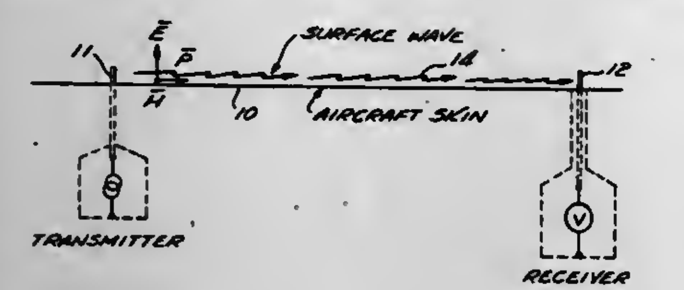

1. A surface structure for reducing the coupling between a transmitting antenna and a receiving antenna located in the proximity of one another on a support member including:
means for attaching said surface structure to said support member;
said surface structure comprising thin metallic reflecting portions secured to a dielectric material in layer form and positioned between said support member and said metallic portions;
said transmitting antenna producing an electromagnetic wave traveling along the surface of said surface structure toward said receiving antenna;
said metallic portions being spaced apart on said dielectric material to provide said surface with both matellic and dielectric surface portions; and
said metallic portions and said dielectric material being constructed to provide said surface with a wave impedance capacitive in nature to repel the wave energy from said surface and away from said receiving antenna.

4,301,457
ANTENNA EMPLOYING CURVED PARASITIC END-FIRE DIRECTORS
Richard D. Bogner, 4 Hunters La., Roslyn, N.Y. 11576
Filed Sep. 1, 1978, Ser. No. 938,884
Int. Cl.³ H01Q *15/16*
U.S. Cl. 343—770 11 Claims

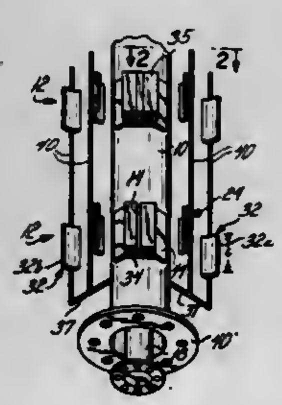

1. An antenna assembly for transmitting signals of a given wavelength, comprising an elongated electrically conductive supporting structure having a major transverse dimension such as to effect the pattern of the antenna assembly, a driven antenna element carried by said supporting structure and defining a radiation axis extending therefrom, and at least one end-fire parasitic director extending generally from said structure and comprising a conductive member concavely curved with respect to said structure in a plane containing the electric vector radiated by the said driven antenna element, which plane is also normal to the axis of said elongated conductive supporting structure, said director being so positioned relative to said driven antenna and supporting structure as to alter the shape of the antenna pattern produced by the combined effects of said driven antenna and supporting structure, while not intersecting the radiation axis of said driven element, to provide a selected pattern for said antenna assembly said conductive member being curved with an average radius between one-eighth and one times the major transverse dimension of the support structure and has a linear dimension in said plane between approximately one-fourth and one-half wavelength.

4,301,458
ANTENNA ARRAY WITH IMPEDANCE MATCHING USING MUTUAL COUPLING
McKinley R. Johns, Cherry Hill, N.J., assignor to RCA Corporation, New York, N.Y.
Filed Feb. 28, 1980, Ser. No. 125,635
Int. Cl.³ H01Q *21/24*
U.S. Cl. 343—800 4 Claims

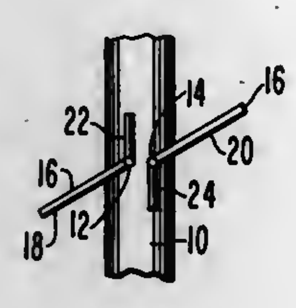

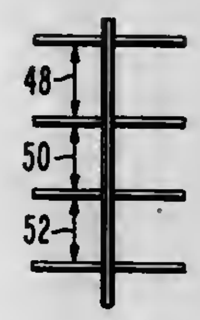

1. An antenna array comprising a plurality of vertically stacked bays, each bay comprising a plurality of antennas, each antenna comprising a slanted dipole and a pair of vertical stubs electrically coupled to said dipole, and means for broadbanding said array comprising the spacing between the top and bottom bays and the respective adjacent bays being about 0.76 of a wavelength, any remaining spacings between bays being about 0.82 of a wavelength.

4,301,459
INK EJECTION APPARATUS COMPRISING ENTRAINED AIR REMOVAL MEANS
Takuro Isayama; Hiromichi Komai; Hiroshi Yamazaki, and Tsutomu Sato, all of Tokyo, Japan, assignors to Ricoh Company, Ltd., Tokyo, Japan
Filed Oct. 29, 1979, Ser. No. 89,019
Claims priority, application Japan, Nov. 16, 1978, 53-141429; Nov. 16, 1978, 53-141430
Int. Cl.³ G01D *15/18*
U.S. Cl. 346—140 R 11 Claims

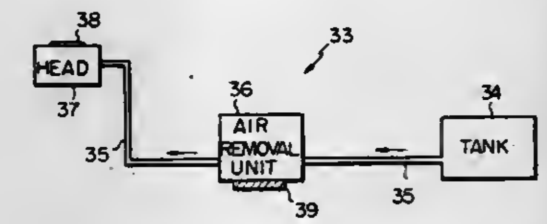

1. An ink ejection apparatus including an ink reservoir, an ink ejection head and a conduit connecting the reservoir to the head, characterized by comprising:
air rremoval means disposed in the conduit for removing entrained air from the ink;
booster means connected to the removal means for increasing the air removing ability thereof; and
sensor means for sensing an amount of entrained air in the ink in the head and producing a signal when the amount of entrained air exceeds a predetermined value, the booster means being energized by the signal.

4,301,460
INK EJECTION APPARATUS
Masayoshi Miura; Kiyoshi Yamamori, and Akira Mizoguchi, all of Kawasaki, Japan, assignors to Matsushita Electric Industrial Company, Limited, Osaka, Japan
Filed Jan. 18, 1980, Ser. No. 113,262
Claims priority, application Japan, Jan. 19, 1979, 54/5061; Jan. 20, 1979, 54/4994
Int. Cl.³ G01D *15/18*
U.S. Cl. 346—140 R 9 Claims

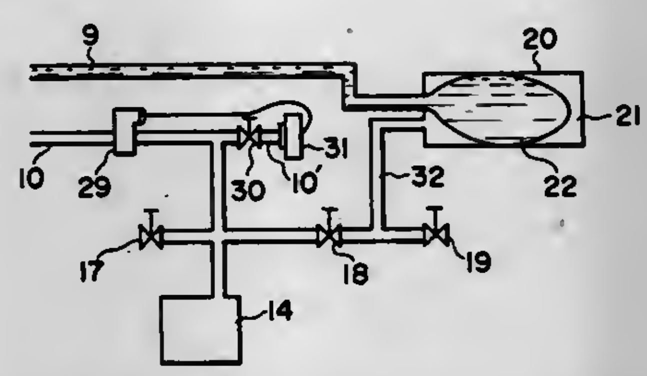

1. An ink ejection apparatus comprising an ink ejecting unit including means for forming an air chamber, a liquid chamber rearwardly of said air chamber for holding ink therein and axially aligned first and second discharge channels for allowing air to be discharged through said first discharge channel and allowing ink to be discharged through said first and second discharge channels; means mounted adjacent to said liquid chamber for generating rapid pressure rises in said liquid chamber in response to electrical signals for discharging said ink through said aligned discharge channels into the atmosphere; an ink container for holding ink therein and supplying the ink to said liquid chamber; a source for generating pressurized air when energized; a first conduit for supplying said pressurized air to said air chamber to provide a stream of air through said first discharge channel into the atmosphere; a second conduit fo supplying said pressurized air to said liquid container to establish a static balance between the pressures in said air and liquid chambers in a region adjacent to said second discharge channel, said ink container being partially filled with the pressurized air the volume of which is greater than the volume of air in said air chamber; and means for imparting a retarding action to a transitory variation of air pressure in said first conduit to prevent the pressure in said region of said air chamber from exceeding the pressure in said region of said liquid chamber when said pressurized air generating source is energized.

4,301,461
LIGHT EMITTING DIODE
Toshiaki Asano, Yokohama, Japan, assignor to Canon Kabushiki Kaisha, Tokyo, Japan
Filed Dec. 18, 1979, Ser. No. 104,846
Int. Cl.³ H01L *33/00*
U.S. Cl. 357—17 3 Claims

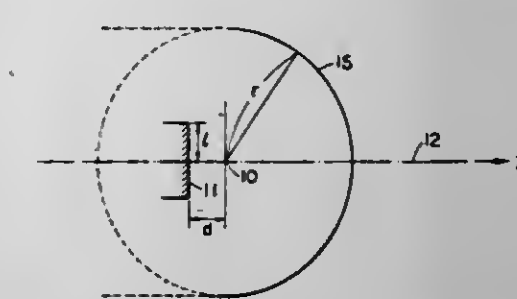

1. System for projecting light from a light emitting diode comprising:
(a) projection optical means having means defining an aperture for restricting the range of the direction of the light from the light emitting diode,
(b) a light emitting diode having a dome provided on a light emitting portion,
at least one part of the outer surface of said dome being of semi-spherical shape having a rotatory symmetrical axis, and said light emitting portion being disposed at a position displaced by a finite distance $|d|(|d|>0)$ in a direction opposite to said projection optical means from the center of curvature of said semi-spherical outer surface.

4,301,462
LIGHT ACTIVATED SILICON SWITCH WITH ETCHED CHANNEL IN CATHODE BASE AND ANODE EMITTER COMMUNICATING WITH CLADDED OPTICAL FIBER
Lewis R. Lowry, Greensburg, Pa., assignor to Westinghouse Electric Corp., Pittsburgh, Pa.
Filed Aug. 3, 1978, Ser. No. 930,762
Int. Cl.³ H01L *27/14*
U.S. Cl. 357—30 5 Claims

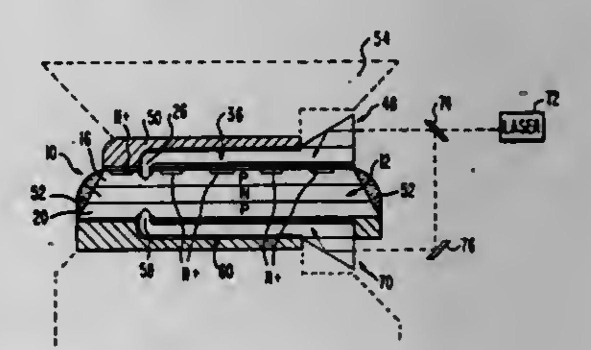

1. A light activated silicon switch comprising:
(a) a silicon wafer having cathode emitter, cathode base, anode base and anode emitter regions;
(b) a plurality of optical targets, each target comprising a channel etched in only the cathode base region, each of said channels extending from a major surface of said wafer

into the cathode-base region to a depth less than the thickness of the region;

(c) a plurality of light transmitting conduits, each conduit having two end portions, and comprising a central core of light transmitting material surrounded by a cladding, the cladding being removed at one end portion for optically communicating with said channel, the other end portion being adapted to receive a light trigger from a source; and

(d) anode and cathode electrodes affixed to said anode and cathode emitter regions, said cathode electrode including a portion which extends into said channel.

4,301,463

DEMULTIPLEXING PHOTODETECTOR

Charles A. Burrus, Jr., Fair Haven; Joe C. Campbell, Middletown; Andrew G. Dentai, Highlands, and Tien P. Lee, Holmdel, all of N.J., assignors to Bell Telephone Laboratories, Incorporated, Murray Hill, N.J.

Filed Mar. 7, 1980, Ser. No. 128,305

Int. Cl.[3] H01L *27/14*

U.S. Cl. 357—30 **3 Claims**

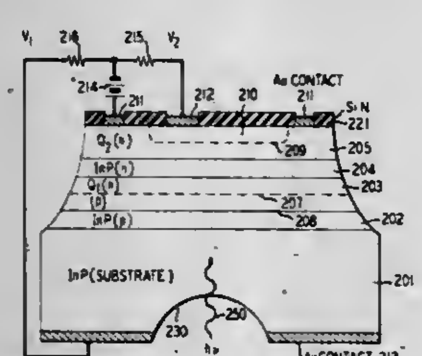

1. A demultiplexing photodetector comprising an indium phosphide substrate (201), a first indium phosphide layer (202) of one conductivity type epitaxially grown on said substrate, a first quaternary layer (203) with a first bandgap having indium, gallium, arsenic and phosphorous as its elements and being epitaxially grown as the opposite conductivity type on said first indium phosphide layer, said first quaternary layer having a pn junction (207) within the layer, a second indium phosphide layer (204) of the opposite conductivity type epitaxially grown on said first quaternary layer, a second quaternary layer (205) with a second bandgap that is different than said first bandgap and being epitaxially grown on said second indium phosphide layer as a layer of opposite conductivity type, a region (210) of said second quaternary layer being of said first conductivity type thereby creating a pn junction (209) in said second quaternary layer, and electrode means (211, 212, and 213) for independently coupling potentials to the pn junctions in said first and second quaternary layers, CHARACTERIZED IN THAT the elements of said first and second quaternary layers are proportioned such that said first bandgap is higher in energy than said second bandgap, and said electrode means includes an electrode (213) deposited on the bottom surface of said substrate having an opening (230) such that input radiation can be coupled through said substrate to the quaternary layers.

4,301,464

LEAD FRAME AND SEMICONDUCTOR DEVICE EMPLOYING THE SAME WITH IMPROVED ARRANGEMENT OF SUPPORTING LEADS FOR SECURING THE SEMICONDUCTOR SUPPORTING MEMBER

Keizo Otsuki, Higashiyamato; Hidetoshi Mochizuki, Fuchu; Akira Suzuki, Ohme; Yoshio Adachi; Hideki Kosaka, both of Kodaira, and Gen Murakami, Machida, all of Japan, assignors to Hitachi, Ltd., Tokyo, Japan

Filed Jul. 5, 1979, Ser. No. 55,070

Claims priority, application Japan, Aug. 2, 1978, 53/93607

Int. Cl.[3] H01L *23/48, 29/44, 29/52*

U.S. Cl. 357—70 **15 Claims**

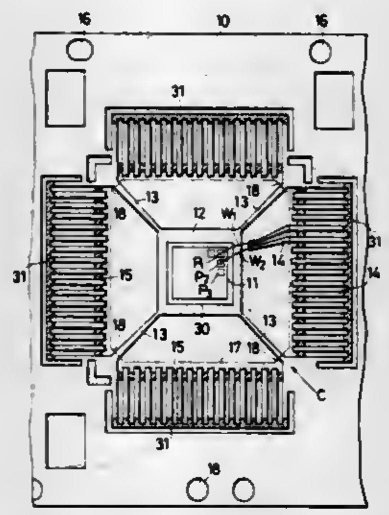

1. In a lead frame of a metal sheet having a supporting member in the shape of a quadrangle for supporting a semiconductor element thereon, four supporting leads each serving to support said supporting member at one end thereof, a plurality of connecting leads each having one end protruded towards a peripheral edge of said supporting member, and a frame portion serving to support the other ends of said supporting and connecting leads, the improvements wherein said four supporting leads respectively extend from four corners of said quadrangular supporting member to said frame portion in respective directions extending outside said supporting member along lines each of which extends from the center portion of said supporting member to respective corners of said quadrangle thereof, and wherein said connecting leads extend from said frame portion towards respective ones of four peripheral edges of said quadrangular supporting member.

4,301,465

COVER MOUNTED MULTI-COLUMNAR SEMICONDUCTOR ASSEMBLY

Michel Masselin, Velizy Villacoublay, France, assignor to Alsthom-Atlantique, Paris, France

Filed May 8, 1979, Ser. No. 37,083

Claims priority, application France, Mar. 12, 1979, 79 06235

Int. Cl.[3] H01L *25/04, 23/42, 23/44*

U.S. Cl. 357—82 **4 Claims**

1. A cover mounted multi-columnar semiconductor assembly for mounting to a casing containing a cooling fluid, said assembly comprising:

a first end plate and a second end plate,

a shaft fixed at its ends to the centers of respective plates,

a plurality of columnar arrays of semiconductors spaced apart by solid copper blocks interposed between said semiconductors, with said arrays being installed between said plates,

the improvement wherein said first end plate constitutes the cover of said casing such that said arrays are disposed within said cooling fluid, and wherein a plurality of spring biased clamping means are carried by said second end plate at circumferentially spaced positions corresponding to said columnar arrays and bear against the ends of said arrays to independently compress said arrays axially from said second end plate in the direction of said first end plate to adjust to the load of the individual columnar arrays, and wherein said clamping means comprises for each columnar array, an axially slidable clamping part mounted to said second end plate for sliding movement towards and away from said first end plate along the axis of said columnar arrays, a washer guide disposed at the end of said columnar array and a spring washer interposed between said washer guide and said clamping part, and a screw threaded to said second end plate and having a head contacting the side of said clamping part opposite said spring washer, such that by rotation of said screw, the biasing force acting on said columnar array may be independently varied for a given columnar array.

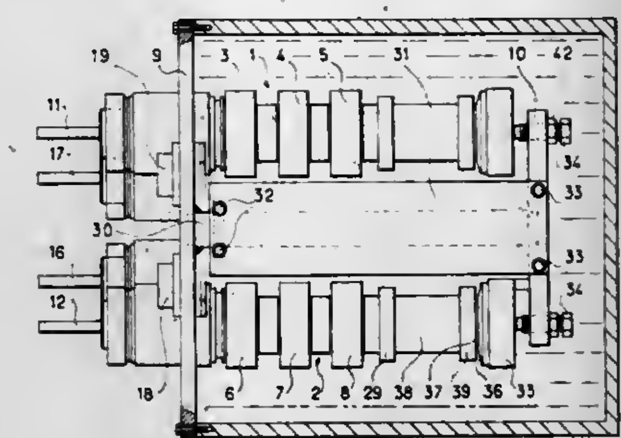

4,301,466

FAST ACTING PHASE SHIFTING APPARATUS FOR USE IN DIGITAL SAMPLING SYSTEMS

Maurice G. Lemoine, and Leonard A. Pasdera, both of Redwood City, Calif., assignors to Ampex Corporation, Redwood City, Calif.

Filed Feb. 1, 1980, Ser. No. 117,752

Int. Cl.[3] H04N *9/32, 9/497*

U.S. Cl. 358—13 **27 Claims**

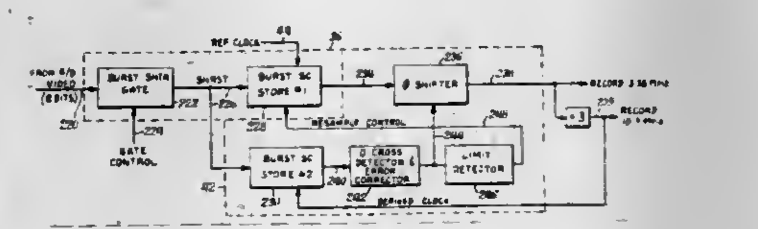

21. A method of sampling an information signal having a time-base synchronizing component of a known frequency whereby the samples are taken in precise locations relative to the synchronizing component thereof, comprising the steps of:

storing reference samples obtained from said synchronizing component at times determined by a phase stable clock signal and generating an output clock signal that is phase synchronized with said reference samples;

periodically sampling the synchronizing component at times determined by said output clock signal to obtain a set of comparison samples thereof;

examining each set of comparison samples and detecting a change in the sample phase location thereof and providing an error signal indicative of the magnitude of the change; and

adjusting the phase of the generated output clock signal in response to the error signal.

4,301,467

PROCESS FOR THE OPTOELECTRONIC TRANSMISSION OF AN IMAGE

Walter Jaeger, Cureglia, Switzerland, assignor to GX-Holding AG, Switzerland

Filed Aug. 30, 1979, Ser. No. 71,074

Claims priority, application Switzerland, Sep. 1, 1978, 9241/78

Int. Cl.[3] H04N *9/04*

U.S. Cl. 358—41 **26 Claims**

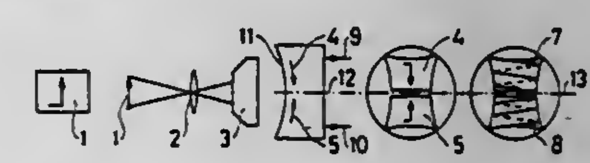

24. A method of transmitting a multi-colored image (1) of a subject, including the steps of: optically splitting said subject image into two mirror images of each other (4,5) reproduced on a surface (11) of a transducer (6) in mutually symmetrical relation to a geometrical axis (12) of the transducer; and scanning said two mirror images on said surface of the transducer along scanning rasters (7,8) also arranged in substantially mutual symmetrical relation to said geometrical axis of the transducer to produce two corresponding video signals (9,10).

4,301,468

COLOR TELEVISION VIEWER

Luis W. Alvarez, 131 Southampton Ave., Berkeley, Calif. 94707

Continuation-in-part of Ser. No. 56,035, Jul. 9, 1979, abandoned. This application Mar. 10, 1980, Ser. No. 128,641

Int. Cl.[3] H04N *9/16*

U.S. Cl. 358—64 **26 Claims**

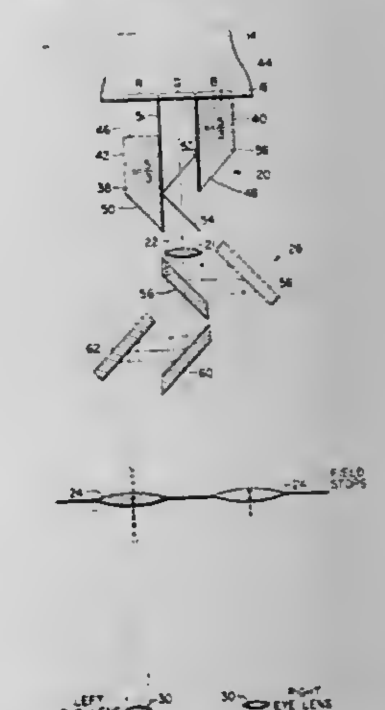

1. A television viewing apparatus for visually displaying color television signals of a standard type, comprising,

a television signal receiving circuit supplied with a television signal of a selected standard for simultaneously generating a plurality of separate, scan line color video signals,

raster scan, cathode ray tube means for displaying a plurality of differently colored rasters side by side in the direction of horizontal line scanning,

serial delay line means for separately sampling and holding

each scan line color video signal, one scan line at a time, at one clock rate and subsequently outputting the sampled and held signal at a second, faster clock rate,

switch means for sampling in succession, all of the delay lines' outputs in one, horizontal line scan period and for supplying the sampled outputs to the cathode ray tube means for display,

means for optically combining the side-by-side rasters into a composite, full color image.

4,301,469

RUN LENGTH ENCODER FOR COLOR RASTER SCANNER

Douglas P. Modeen, Granby, and Frank D. Sundermeyer, Middletown, both of Conn., assignors to United Technologies Corporation, Hartford, Conn.

Filed Apr. 30, 1980, Ser. No. 145,095

Int. Cl.³ H04N *9/10*

U.S. Cl. 358—75 **2 Claims**

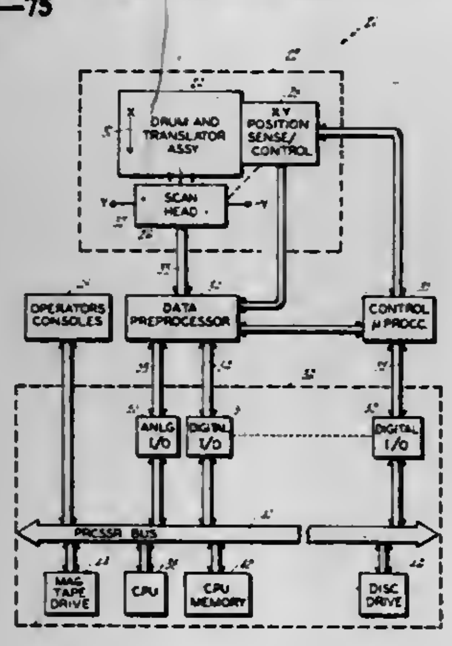

1. A run-length encoder circuit for encoding in successive digital words the color and the continuous sample number run length for a common color from color sampled data received from a color raster scanner having two optical apertures including a small diameter resolution aperture and a large diameter screen aperture, the run-length encoder comprising:

means for registering color samples received successively from each of the two apertures, separately;

means for counting successive samples from each aperture having the same identified color;

memory means for storing signals representative of sets of count values, one set for each different color represented by the input samples, said sets of count values being selectable in dependence on the status of the sampled color as being alternatively a line color, or an area color; and

means for comparing the count of samples from the resolution aperture having a common color to the set of count values associated with that color and for providing in response to the actual count being greater than the selected count, providing an output digital word including the color identification and the actual run length sample count associated with the identified color.

4,301,470

ALIGNMENT APPARATUS

Volker Pagany, Freising, Fed. Rep. of Germany, assignor to Texas Instruments Deutschland, Freising, Fed. Rep. of Germany

Filed Mar. 17, 1980, Ser. No. 130,646

Claims priority, application Fed. Rep. of Germany, Mar. 17, 1979, 2910580

Int. Cl.³ H04N *7/00*

U.S. Cl. 358—101 **26 Claims**

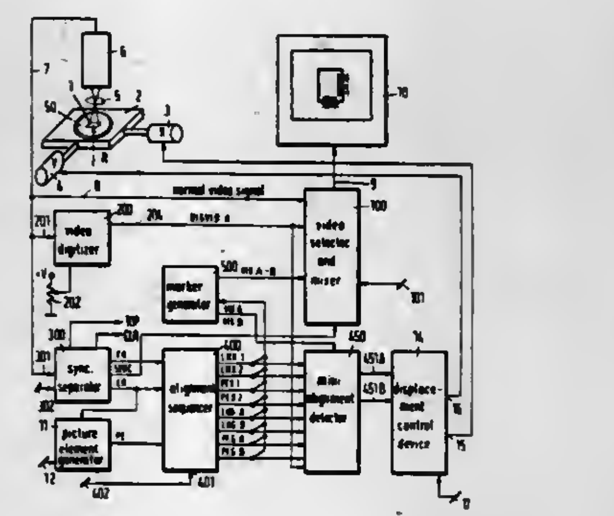

1. Apparatus for aligning with respect to a known reference position an object disposed in the field of view of a television camera on a carrier adjustable in X and Y axial directions, the television camera scanning a surface of the object and a peripheral area surrounding the object in a line raster and generating electrical video signals which correspond to an image of the scanned area, comprising digitizing means for which receiving the video signals and forming therefrom digital video signals of two signal levels which for the video signals originating from the object have predominantly a first signal level and for the video signals originating from the peripheral area have the second level, analyzing means (a) for analyzing the digital video signals in two sets of data windows, each set associated with an individual one of the X and Y axial direction and in each set, the data windows corresponding to separate regions of the video image having in the associated axial direction predetermined distances from each other and different distances from an associated edge of the image of the object, and (b) for responding to the appearance of digital video signals of the first signal level in each data window and furnishing output signals for each data window set depending on the number of data windows counted in uninterrupted sequence in a predetermined sense in the associated axial direction, and during which the proportion of digital video signals of the first signal level exceeds a predetermined minimum value, wherein a single data window set is provided for each axial direction, and in that and wherein each data window set the number of data windows counted in uninterrupted sequence in said predetermined sense in the respective axial direction and having a proportion of digital video signals of the first signal level exceeding said predetermined minimum value is equal to a predetermined number (N) different from zero when said object is aligned with respect to said reference position.

4,301,471

MOVING TARGET INDICATOR SYSTEM UTILIZING CHARGE COUPLED DEVICE

Donald J. Holscher, Playa Del Rey, and Donald E. French, West Lake Village, both of Calif., assignors to Hughes Aircraft Company, Culver City, Calif.

Continuation of Ser. No. 756,588, Dec. 20, 1976, abandoned. This application Feb. 5, 1979, Ser. No. 9,988

Int. Cl.³ H04N *7/18*

U.S. Cl. 358—105 **10 Claims**

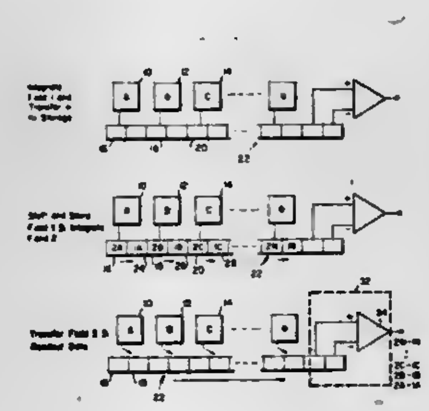

1. A processor for determining changes of energy representative of the intensity of a scene, between first and second fields of said scene comprising:

a plurality of current generating means for providing current representative of energy from said scene,

a CCD storage channel having a plurality of first and second bit storage positions,

integrating means including CCD storage buckets for integrating currents from said plurality of current generating means representative of signal data of each first and second field, said integrating means being each coupled to one of said plurality of current generating means and to a first bit storage position of said storage channel for transferring to said storage channel, signal data from said first and second fields,

clock means coupled to said storage channel for shifting the signal data from the first to the second bit storage positions between transfer of signal data from a first field and signal data from a second field so that data from said first and second fields are respectively stored in said first and second bit storage positions, and for transferring the signal data to an output end of said storage channel when both fields are stored therein, and

means including differencing means coupled to said output end of said storage channel for comparing signal data from said first and second fields.

4,301,472

VIDEO DISPLAY SYSTEM WITH SHADING CIRCUIT FOR SELECTIVELY VARYING INTENSITY OF VIDEO DISPLAY

Michael Danos, Washington, D.C., assignor to Damox Laboratories, Inc., New York, N.Y.

Filed Apr. 17, 1980, Ser. No. 141,011

Int. Cl.³ H04N *3/16*

U.S. Cl. 358—163 **33 Claims**

1. In a video display system utilizing horizontal and vertical deflection signals and a video signal to produce a video display, a control circuit for selectively varying the intensity of the video display, comprising:

first means responsive to the horizontal and vertical deflection signals for producing a plurality of signal components corresponding to linear and non-linear functions of the deflection signals;

second means for combining the said plurality of said com-

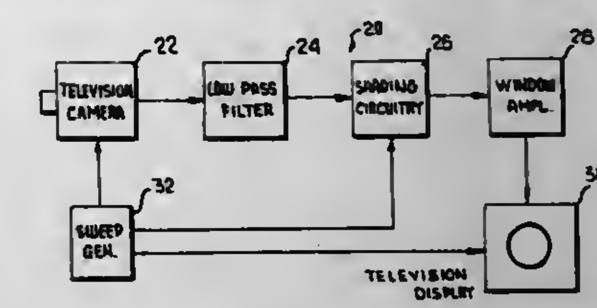

ponents with the video signal to produce a shaded video signal; and

third means for varying said plurality of signal components for controlling the intensity of the video display.

4,301,473

METHOD AND APPARATUS FOR VIDEO SIGNAL RESOLUTION ENHANCEMENT

Kurt F. Wallace, Redwood City; Greg G. Frye, San Leandro, and David A. Grayson, Sunnyvale, all of Calif., assignors to Atari, Inc., Sunnyvale, Calif.

Filed Feb. 22, 1980, Ser. No. 123,864

Int. Cl.³ H04N *3/24, 5/14*

U.S. Cl. 358—166 **12 Claims**

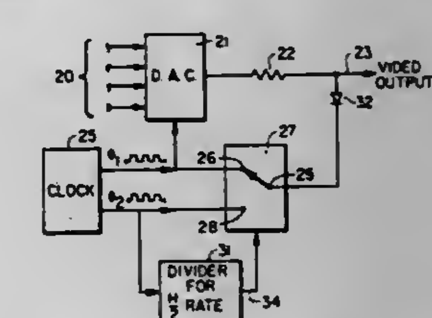

1. A method of processing video-type information signals to improve the subjective resolution thereof when displayed on a video-screen, said method comprising the steps of:

inserting black level signals between adjacent picture elements in a first preselected group of scanning lines at predetermined positions in each line; and

inserting black level signals between adjacent picture elements in a second preselected group of scanning lines interlaced with the first preselected group at other predetermined positions.

4,301,474

RESIDUAL CLAMP ERROR COMPENSATION CIRCUIT

David J. Jurgensen, Gaston, and Roger A. Maria, Portland, both of Oreg., assignors to Tektronix, Inc., Beaverton, Oreg.

Filed Apr. 14, 1980, Ser. No. 140,379

Int. Cl.³ H04N *5/16*

U.S. Cl. 358—171 **10 Claims**

1. An apparatus for matching the blanking level of a first video signal to a second video signal wherein said first video signal is being inserted on said second video signal, the apparatus comprising:

a clamping circuit coupled to receive said second video signal and clamp said second video signal to a predetermined dc voltage level, said clamping circuit also produces an error voltage representative of the residual error of said clamping circuit;

means for combining coupled to receive said error voltage

and said first video signal to produce a compensated first video signal; and

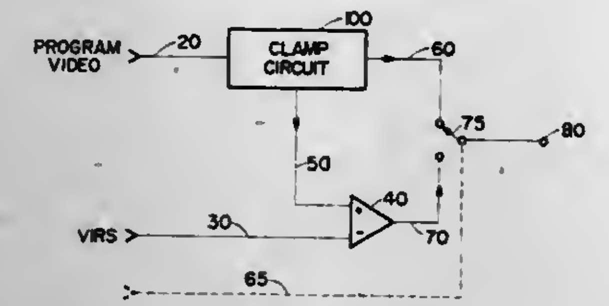

switching between means for switching said clamped second video signal and said compensated first video signal to an output terminal at the command of control signal.

4,301,475
COMBINATION DIGITAL-ANALOG TELEVISION SWITCHING SYSTEM
Reginald F. H. McCoy, Gainesville, Fla., assignor to Vital Industries, Inc., Gainesville, Fla.
Filed Feb. 25, 1980, Ser. No. 124,064
Int. Cl.³ H04N *5/22*
U.S. Cl. 358—181 **47 Claims**

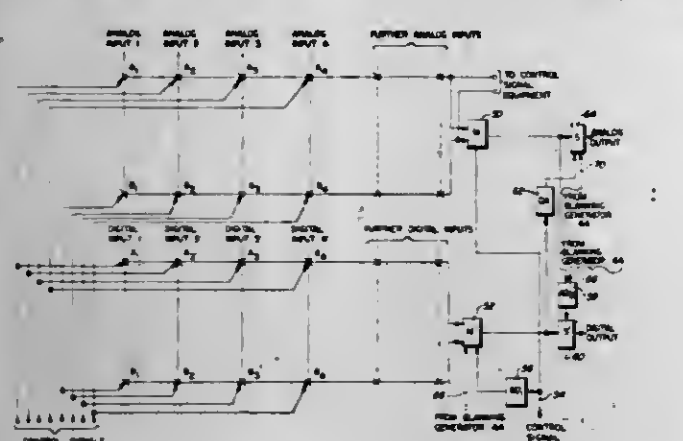

1. A combined analog and digital switching system for video signals, comprising a source of digital video input signals, a source of analog video input signals, first video signal mixing means having at least two analog signal inputs, second video signal mixing means having at least two digital signal inputs, means for selectively supplying said analog source input signals to one input of said first mixing means and supplying an analog zero reference signal to the other input thereof, means for selectively supplying said digital source input signals to one input of said second mixing means and supplying a digital zero reference signal to the other input thereof, means for converting the digital output of said second mixing means into a corresponding analog signal, and means for adding the analog output of said first mixing means to the output of said converting means to provide a composite analog video output signal.

4,301,476
PHASE CONTROLLED SHUTTERING SYSTEM WITH SELECTABLE SHUTTERED AND UNSHUTTERED MODES
Patrick N. Keller, 820 Alene Ave., and Leon G. Biesiadecki, 1400 Wayne St., Space 42, both of Ridgecrest, Calif. 93555
Filed Sep. 29, 1980, Ser. No. 191,599
Int. Cl.³ H04N *5/30, 5/26*
U.S. Cl. 358—209 **16 Claims**

1. A shutter for a video camera comprising:
a first disc of opaque material having,
a first series of light passages arranged circumferentially about the center of said first disc, and
a second series of light passages equal in number to said first series of light passages and arranged circumferentially about the center of said first disc each light passage of said second series being positioned in a predetermined angular relationship with an associated one of said light passages in said first series;
a second disc of opaque material having,
a third series of light passages arranged circumferentially about the center of said second disc, and
synchronizing passage means arranged in a predetermined relationship with respect to said third series of light passages;

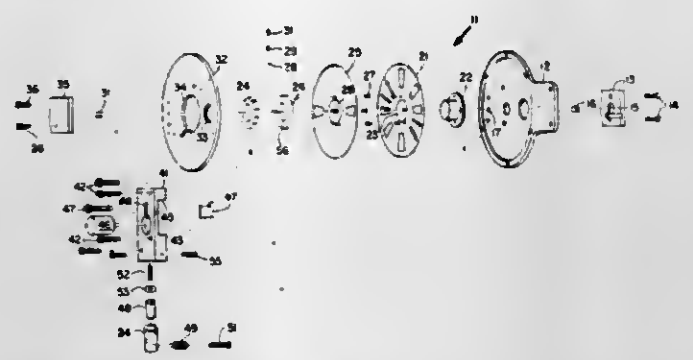

indexing means connected to said first and second discs for selective alignment of predetermined ones of said first and third series of light passages; and
a housing surrounding said first and second discs and having,
an image aperture aligned with said first and third series of light passages, and
synchronizing signal generating means in alignment with said second series of light passages and said synchronizing passage means.

4,301,477
SOLID-STATE IMAGING DEVICE
Iwao Takemoto, Kodaira; Masaharu Kubo, Hachioji; Shinya Ohba, Kokubunji; Shuhei Tanaka, Higashiyamato, and Masakazu Aoki, Hachioji, all of Japan, assignors to Hitachi, Ltd. and Hitachi Denshi Kabushiki Kaisha, both of Tokyo, Japan
Filed Feb. 11, 1980, Ser. No. 120,115
Claims priority, application Japan, Feb. 21, 1979, 54-18343
Int. Cl.³ H04N *5/30, 3/14*
U.S. Cl. 358—213 **11 Claims**

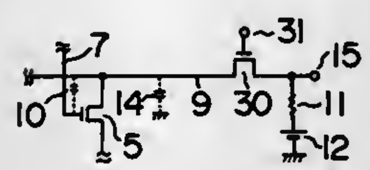

1. A solid-state imaging device comprising a two-dimensional array of photo-electric conversion elements, vertical and horizontal switching MOS transistors for transferring, to a signal output terminal, signals detected by said photo-electric conversion elements, vertical and horizontal scanning circuits for supplying scanning pulses to the gate electrodes of said vertical and horizontal switching MOS transistors respectively, and a switching gate MOS transistor connected between the horizontal switching MOS transistors and the associated signal output terminal.

4,301,478
TV CAMERA WITH FOCUS DETECTING MEANS
Toshio Sakane, Yokohama; Kazuya Hosoe, Machida; Takao Kinoshita, Tokyo; Tokuichi Tsunekawa, Yokohama, and Takashi Kawabata, Kamakura, all of Japan, assignors to Canon Kabushiki Kaisha, Tokyo, Japan
Filed Nov. 27, 1979, Ser. No. 97,854
Claims priority, application Japan, Nov. 30, 1978, 53-148091
Int. Cl.³ H04N *3/26*
U.S. Cl. 358—227 **10 Claims**

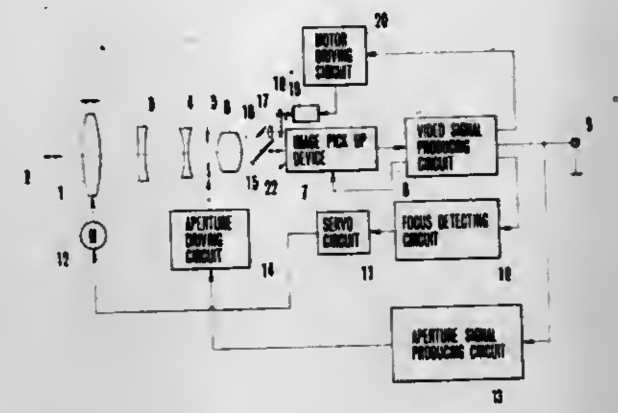

1. A television camera comprising:
(A) an image pick-up device including an image pick-up surface with a main pick-up area and a subsidiary pick-up area;
(B) an image forming optical system for forming an image of an object to be picked up on the main image pick-up area in the image pick-up surface of the image pick-up device;
(C) a detecting optical system for forming at least one detection image of the object for focus detection on the subsidiary image pick-up area in the image pick-up surface of the image pick-up device but outside of the main image pick-up area; and
(D) a circuit system for producing a signal related to focus of the image forming optical system on the basis of the image signal obtained from the subsidiary image pick-up area of the image pick-up device.

4,301,479
SIGNAL PROCESSING SYSTEM OF FACSIMILE
Takahiko Fukinuki, Kokubunji; Hiroshi Yoshigi, Hachioji, and Yumiko Shimazaki, Akikawa, all of Japan, assignors to Hitachi, Ltd., Tokyo, Japan
Filed Sep. 17, 1979, Ser. No. 76,426
Claims priority, application Japan, Sep. 18, 1978, 53-113614
Int. Cl.³ H04M *7/12*
U.S. Cl. 358—257 **4 Claims**

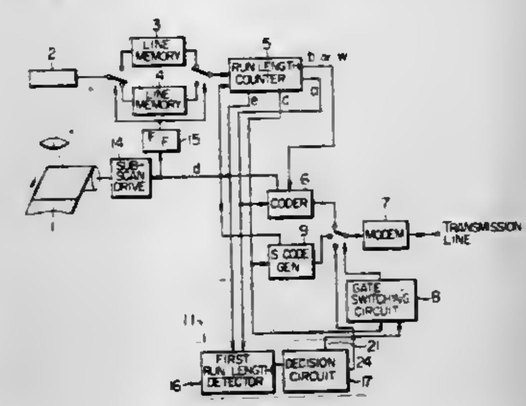

1. A signal processing system of a group III facsimile comprising conversion means for converting the information detected from documents into electrical signals by scanning the documents on which marks are applied to portions thereof to identify the portions according to whether or not they are to be transmitted; decision means for deciding whether or not the scanned lines are to be transmitted by detecting signals which correspond to the marks from the output of said conversion means; and means responsive to the output of said decision means for transmitting a special code signal which consists of the least necessary number of bits to transmit one line, while blocking transmission of the scanned output signal, with respect to scanning lines that are to be transmitted.

4,301,480
APPARATUS FOR MONITORING REPRODUCED AUDIO SIGNALS DURING FAST PLAYBACK OPERATION
Masatsugu Kitamura, Yokohama, Japan, assignor to Victor Company of Japan, Limited, Yokohama, Japan
Filed Apr. 11, 1980, Ser. No. 139,509
Claims priority, application Japan, Apr. 18, 1979, 54-47444
Int. Cl.³ G11B *5/00, 15/18*
U.S. Cl. 360—8 **15 Claims**

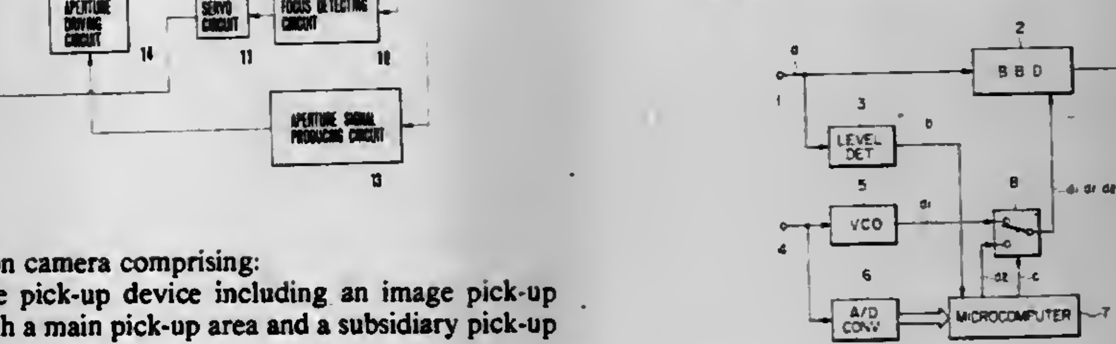

1. Apparatus for monitoring reproduced audio signals during fast playback operation, comprising:
(a) a first pulse generator for producing a first pulse train signal;
(b) a level detecting circuit responsive to a reproduced audio signal for producing an output signal when the magnitude of said reproduced audio signal exceeds a predetermined value;
(c) a memory circuit for storing pieces of said reproduced audio signal in a sequence in response to said first pulse train signal;
(d) a second pulse generator for producing a second pulse train signal the frequency of which is much lower than that of said first pulse train signal;
(e) a switching circuit for selectively supplying said memory circuit with one of said first and second pulse train signals;
(f) a control circuit responsive to said output signal of said level detecting circuit for controlling said switching circuit, said switching circuit being controlled to supply said memory circuit with said second pulse train signal upon presence of said output signal of said level detecting circuit so that said pieces of information prestored in said memory circuit are read out at a normal pitch.

4,301,481
OPERATION MODE SWITCHING SYSTEM FOR TAPE RECORDER
Shigeru Suzuki, Hamamatsu, Japan, assignor to Nippon Gakki Seizo Kabushiki Kaisha, Hamamatsu, Japan
Filed Aug. 1, 1979, Ser. No. 62,805
Claims priority, application Japan, Aug. 8, 1978, 53-108532[U]
Int. Cl.³ G11B *15/12, 15/48*
U.S. Cl. 360—62 **8 Claims**

1. An operation mode switching system for a tape recorder having at least stop, recording-pause, recording, and playback modes, comprising:
at least first and second operation members;
first means coupled to said first operation member for setting the tape recorder to the recording-pause mode in response to an operation of said first operation member when the tape recorder is in the stop mode;
second means coupled to said second operation member for

setting the tape recorder to the playback mode in response to an operation of said second operation member when the tape recorder is in the stop mode and to the recording mode in response to an operation of said second operation member when the tape recorder is in the recording-pause mode; and

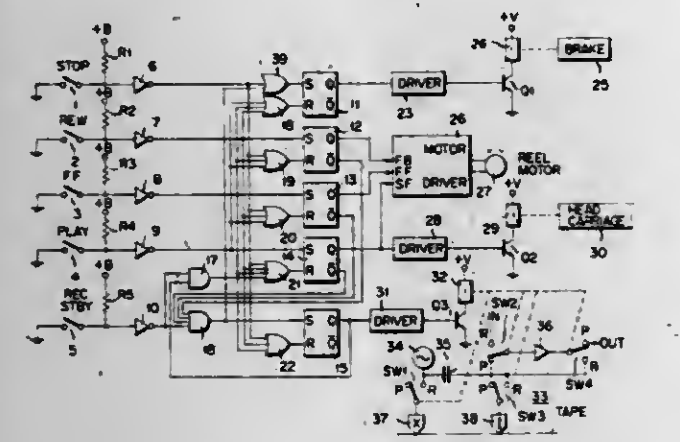

third means for setting the tape recorder to the recording-pause mode in response to an operation of said first operation member when the tape recorder is in the recording mode.

4,301,482

PROGRAMMABLE MULTI-CHANNEL AUDIO PLAYBACK SYSTEM FOR REEL-TO-REEL TAPES

Richard W. Trevithick, 1730 E. Woodside Dr., #37, Salt Lake City, Utah 84117

Continuation-in-part of Ser. No. 932,781, Aug. 11, 1978. This application May 29, 1979, Ser. No. 42,994

Int. Cl.³ G11B *27/22, 27/30, 15/18*

U.S. Cl. 360—72.1 **3 Claims**

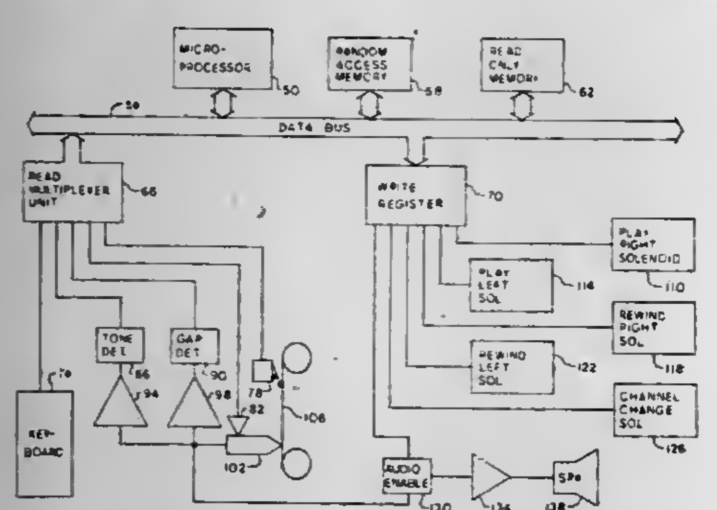

1. A programmable multi-channel audio playback system for tape cassettes and the like comprising

an end-to-end tape means having two or more channels on which a plurality of segments of information are serially recorded in one direction on a first channel and in the opposite direction on a second channel, each serially adjacent pair of segments being separated by a gap, and each end of the tape means including a gap for each channel, said tape means further having recorded thereon a table of contents which includes information identifying each segment of information recorded on the tape means, information identifying the gaps preceding and succeeding each segment of information, and information identifying which channel each segment of information is on,

reading means for reading information from the tape means as the tape means is moved,

audio speaker means for aurally reproducing information segments applied thereto when activated by an activation signal,

keyboard means having a plurality of manually operable keys which, when operated, cause production of key signals, said key signals identifying information segments on the tape means which are to be reproduced,

storage means for temporarily storing said key signals,

means coupled to said reading means for producing a gap indication signal when said reading means encounters a gap on said tape means,

means for supplying said gap indication signals to said microprocessor,

a microprocessor responsive to said key signals, to the table of contents read from the tape means, and to said gap indication signals for producing control signals to control movement of the tape means, and for producing activation signals for activating said audio speaker means, and

control means for causing the tape means to move and for controlling such movement in response to control signals, said control means including

first direction play means responsive to control signals from said microprocessor for causing said tape means to move at a playback speed in said first direction,

second direction play means responsive to control signals from said microprocessor for causing said tape means to move at a playback speed in said second direction,

first rewind means responsive to control signals from said microprocessor for causing said tape means to move at a faster than playback speed in said first direction,

second rewind means responsive to control signals from said microprocessor for causing said tape means to move at a faster than playback speed in said second direction, and

means responsive to control signals from said microprocessor for causing said reading means to read information segments from either the first or second channel and for causing said audio speaker means to reproduce information segments from either the first or second channel.

4,301,483

UNIT FOR TRANSMITTING THE MOVEMENT OF A MOTOR TO THE CASSETTE SPOOL DRIVING GEARS IN A CASSETTE TAPE RECORDER

Giovanni Santoro, Via Campo di Mele 55, Roma, Italy

Filed Aug. 17, 1979, Ser. No. 67,421

Claims priority, application Italy, Aug. 22, 1978, 50818 A/78

Int. Cl.³ G11B *15/22, 15/26*

U.S. Cl. 360—96.3 **7 Claims**

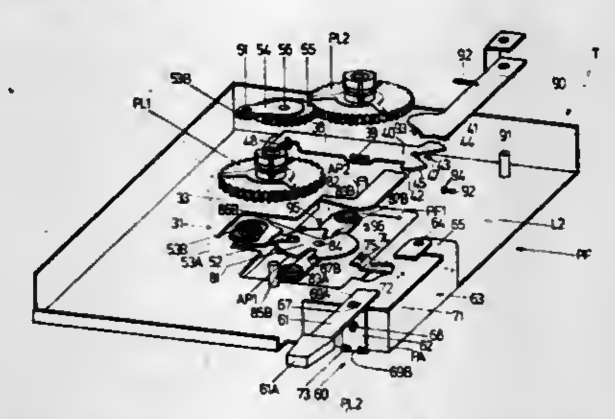

1. In a magnetic tape recorder provided with normal and reverse operation comprising: a frame comprising a bottom wall having an inner side and an outer side and provided with an opening, at least one side wall and a front wall; a driving motor adapted to rotate in one direction for the normal operation and in the opposite direction for the reverse operation; two cassette spool driving gears, adapted to receive the spools on which said magnetic tape is wound, supported by two parallel axes protruding from said inner side of said bottom wall; a flywheel supported by an axis protruding from said outer side and connected to said motor of said tape recorder; and, a support for the magnetic head and the pinch roller of said tape recorder pivoted on a pin protruding from said inner side and biassed by elastic means towards a position where said magnetic head and said pinch roller are engaged with said tape, a unit for transmitting the movement of said flywheel to said cassette spool driving gears comprising:

(a) a drive system automatically operating in normal forward and in reverse and in fast forward and rewind, both for the normal forward and reverse operations, comprising: a first and second double gears each having a gear wheel of a given diameter and a pinion of smaller diameter integral and coaxial therewith, said gear wheel and pinion being meshed with each other and supported by two axes carried by a movable flat support provided with means for the restrained movement on said outer side of said bottom wall having matching means, so as to assume three different positions, i.e. a first position for said normal forward, a second position for said fast forward and a third position for said fast rewind; an operation lever for said flat support and said support for said head and pinch roller; and, a control mechanism for said operation lever and a transmission output device of said drive system meshed with said second double gear and adapted to mesh with one or the other of said cassette spool driving gears and remain meshed therewith according to the direction of rotation of said second double gear; and

(b) a braking device adapted to automatically brake, both in normal forward and in reverse and in fast forward and rewind, the cassette spool driving gear receiving the spool from which said magnetic tape is unwound, said braking device comprising: an elastic plate pivoted in the middle between said two cassette spool driving gears, so as to make limited angular movements, and having each end provided with a braking member pushed against the bottom of one of said cassette spool driving gears by the resilience of said plate; and, a disk pivoted together with said plate so as to move angularly in respect thereof, and provided both with engaging means, adapted to engage with matching engaging means carried by said operation lever of said drive system, said means forcing said disk to rotate with said lever, and with engaging means adapted to engage with matching engaging means carried by one or the other arm of said elastic plate, according to the direction of rotation of said plate, to move said one of said arms and move said braking member carried by said arm away from the corresponding cassette spool driving gear.

4,301,484

CASSETTE LOADING DEVICE OF TAPE RECORDER

Masahiro Sawaguchi; Masami Sasaki; Hiroshi Hosoya, and Toshiichiro Oka, all of Yokohama, Japan, assignors to Victor Company of Japan, Limited, Yokohama, Japan

Filed Oct. 18, 1979, Ser. No. 86,260

Claims priority, application Japan, Oct. 24, 1979, 53-130635

Int. Cl.³ G11B *15/66*

U.S. Cl. 360—96.6 **6 Claims**

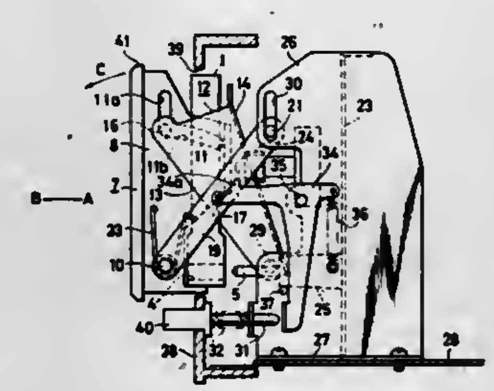

1. A cassette loading device of a tape recorder comprising:

(a) a cassette holder;

(b) a pair of link mechanisms arranged at opposite ends of said cassette holder, said link mechanisms interconnecting said cassette holder to stationary members of the tape recorder enabling the cassette holder to move between cassette loading and disengaged position, said link mechanisms each including a first link arm having one end rotatably secured to said stationary members and an opposite end slidably engaging said cassette holder, and a second link arm having one end rotatably secured to said cassette holder and an opposite end slidably engaging said stationary members, said first and second link arms of each link mechanism intersecting and pivotally engaging each other at the intersection, wherein said opposite ends of the first link arm in each link mechanism are received by a pair of slots formed in said cassette holder, each of said slots including a straight slot portion and an arcuate slot portion, said cassette holder being allowed to pivot about the ends of said second link arms when said opposite ends of the first link arms are received in said arcuate slot portions; and

(c) means for interconnecting one of said first or second link arms for unitary movement.

4,301,485

TAPE SPEED SWITCHING DEVICE IN CASSETTE TAPE RECORDER-PLAYER

Hiroyoshi Takanashi, Hamamatsu, Japan, assignor to Nippon Gakki Seizo Kabushiki Kaisha, Shizuoka, Japan

Filed Dec. 12, 1979, Ser. No. 102,940

Claims priority, application Japan, Dec. 21, 1978, 53-177165[U]

Int. Cl.³ G11B *15/00, 17/00*

U.S. Cl. 360—96.5 **11 Claims**

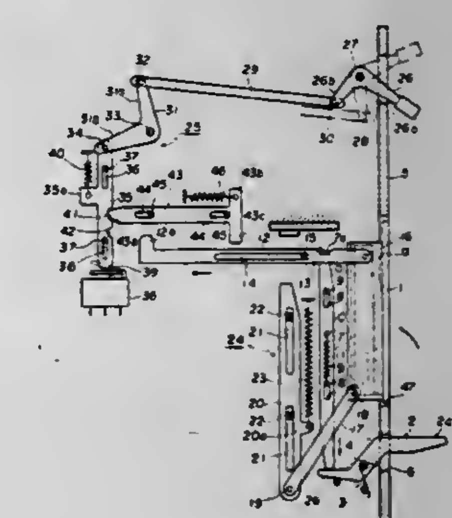

1. A tape speed switching device in a cassette tape recorder-player capable of selecting a tape transport speed for recording and playback among a plurality of different speeds, one of which is a standard speed, the device comprising:

a holder for containing a tape cassette;

means for moving said cassette holder between a locked position and an open position;

multi-position switch means for energizing an electrical drive circuit to move the tape in the cassette at a selected one of said plurality of speeds when the holder is in its locked position; and

means operably interconnecting said switch and said moving means to set said switch to effect said standard tape speed when the cassette holder is moved from its locked position to said open position.

4,301,486

SYSTEM FOR RECORDING INFORMATION ON A FLEXIBLE INFORMATION STORAGE MEDIA

Sheldon H. Brown; William D. Autery; Alan H. Rittman, and Nelson H. Chapman, all of Garland, Tex., assignors to Texas Instruments, Inc., Dallas, Tex.

Filed Jun. 4, 1979, Ser. No. 45,528

Int. Cl.³ G11B *5/016, 17/32, 23/02*

U.S. Cl. 360—99 **22 Claims**

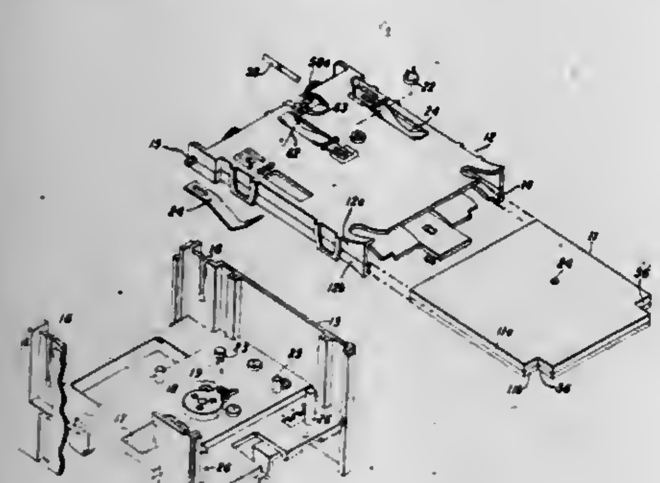

1. A cartridge comprising:

(a) a sheet of flexible information storage media having a major surface for information to be stored thereon;

and

(b) a cartridge housing in the form of a rigid envelope having an internal chamber with said media being retained therein, said chamber being defined by oppositely positioned first and second major surfaces, at least portions of said first and second major surfaces being relatively flat, said first major surface acting as a smoothing plane surface for said media when said media is in rotation, said cartridge housing having:

(i) a first opening extending through a central region of one of said major surfaces for providing access to said media to impart rotational motion thereto;

(ii) a second opening extending through said first major surface for receiving a magnetic head transducer for respectively reading and/or writing information on said major surface of said media as said media is rotated; and

(iii) a plurality of hump-shaped members extending partially along said second major surface and projecting therefrom toward said media, said hump-shaped members for providing aerodynamic pressure against said media while said media is in rotation to bias said media in the direction of said smoothing plane surface, first and second ones of said hump-shaped members being disposed in parallel, adjacent to a projection of said second opening on said second major surface and on opposite sides of said projection for biasing a portion of said media which passes over said head transducer toward said transducer.

4,301,487

ROTARY HEAD ASSEMBLY WITH LUBRICATING DOUBLE SLEEVE CONSTRUCTION

Teruo Maruyama, Neyagawa, Japan, assignor to Matsushita Electric Industrial Co., Ltd., Osaka, Japan

Filed Oct. 3, 1979, Ser. No. 81,340

Claims priority, application Japan, Oct. 16, 1978, 53-127535

Int. Cl.³ G11B *5/52, 21/04*

U.S. Cl. 360—107 **6 Claims**

1. A rotary head assembly, comprising:

(a) a stationary sleeve having one end securely fixed to a base;

(b) a rotary shaft coaxial with and rotatably extended through said stationary sleeve and contained within said base and leaving a cylindrical space therebetween;

(c) a rotary sleeve coaxial with and radially surrounding said stationary sleeve, leaving a cylindrical space therebetween, said cylindrical spaces communicating with each other, said rotary shaft extending through said rotary sleeve and being fixed thereto;

(d) a stationary cylinder securely mounted on said base coaxially of said stationary sleeve;

(e) a rotary cylinder which has the same outer diameter as that of said stationary cylinder and is mounted securely on said rotary shaft adjacent to said stationary cylinder and axially spaced apart from said stationary cylinder by a predetermined distance;

(f) a means for driving said rotary cylinder;

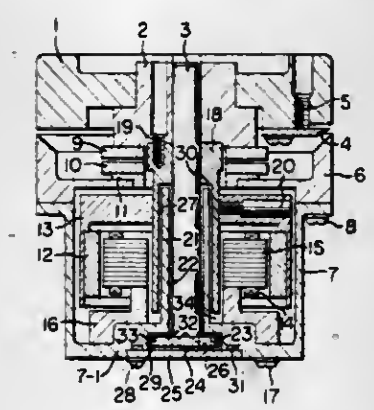

(g) a head securely mounted on said rotary cylinder for sliding contact with a tape which is wrapped and transported around the cylindrical surfaces of said stationary and rotary cylinders; and

(h) a lubricating fluid filled into the space between said stationary sleeve and said rotary shaft, and the space between said stationary sleeve and said rotary sleeve, thereby forming a bearing fluid film portion consisting of

(i) a thrust bearing portion which is defined by a flange which is secured to or formed integral with said rotary shaft and has a diameter greater than that of said rotary shaft the wall surfaces of said stationary sleeve,

(ii) seal means to preclude leakage of said lubricating fluid, and

(iii) a radial bearing portion defined by said cylindrical spaces and said fluid, said driving means being mounted exterior of said radial bearing portion.

4,301,488

TAPE CASSETTE

Reinhard Ramisch, Reichelsheim, Fed. Rep. of Germany, assignor to Friedrich W. König, Reichelsheim, Fed. Rep. of Germany

Filed Jun. 22, 1979, Ser. No. 51,000

Claims priority, application Fed. Rep. of Germany, Feb. 19, 1979, 7904568[U]

Int. Cl.³ G11B *23/02*

U.S. Cl. 360—132 **5 Claims**

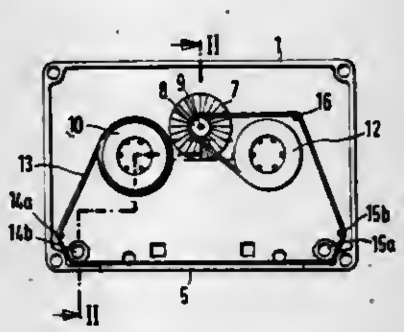

1. A tape cassette, comprising a housing accommodating a magnetic tape, said housing having a window on one of its sides; guiding means including two tape reels rotatably mounted in said housing and adapted to alternately wind and unwind the tape, and a plurality of guide rollers fixedly mounted in said housing and adapted to guide the tape with a predetermined speed in a predetermined path between said reels when the tape is in its working position in a tape recorder; and stroboscope means mounted in said housing and comprising a shaft rotatably supported in said shaft and a stroboscope disc secured to said housing, said tape being arranged to at least partially engage said shaft to move over said shaft in said predetermined path, said stroboscope disc being mounted in the housing so that at least a portion thereof is visible through said window whereby any deviation from said predetermined speed of said tape is indicated in said window, at least a pair of guide rollers being formed with a plurality of alternating ribs and grooves extending transverse to the direction of movement of the tape and providing means thereby adapted to contact the tape for retarding the tape in its movement in said working position.

4,301,489

ARCLESS TAP CHANGER UTILIZING STATIC SWITCHING

Frederick A. Stich, Milwaukee, Wis., assignor to Siemens-Allis, Inc., Atlanta, Ga.

Filed Dec. 19, 1979, Ser. No. 105,082

Int. Cl.³ H02H *7/22*

U.S. Cl. 361—9 **4 Claims**

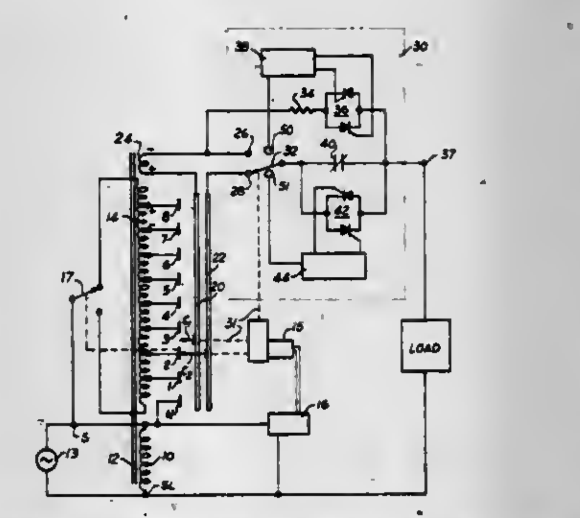

1. A tap change voltage regulator including a tapped electrical winding having a plurality of taps, a part-tap voltage auxiliary winding inductively linked to said tapped winding, a pair of tap selectors adapted to sequentially engage said taps, one of said tap selectors being coupled to one side of said auxiliary winding, an auxiliary switch having first and second stationary contacts coupled respectively to the other side of said auxiliary winding and to the second of said tap selectors; an output terminal; a main current switch coupled between said auxiliary switch and said output terminal; first static switching means connected in shunt about said main current switch; first control means for said static switching means; and drive means for sequentially operating said tap selectors and said auxiliary switch, the improvement comprising a tap changing shunt circuit coupled between said other side of said auxiliary winding and said output terminal thereby to provide an alternate current path about said auxiliary switch and said main current switch, said auxiliary shunt circuit comprising the series combination of a second static switching means and a current limiting resistor; and second control means coupled to said second static switching means for enabling said second static switching means to provide a conductive path around said auxiliary switch and said main current switch whereby current flow through said main current circuit can be arclessly interrupted.

4,301,490

ELECTRONIC OVERLOAD PROTECTION CIRCUIT

Harry C. Nagel, Murrysville, and John J. Kuhn, Allison Park, both of Pa., assignors to American Standard Inc., Swissvale, Pa.

Filed Jul. 9, 1979, Ser. No. 55,864

Int. Cl.³ H02H *7/20*

U.S. Cl. 361—89 **12 Claims**

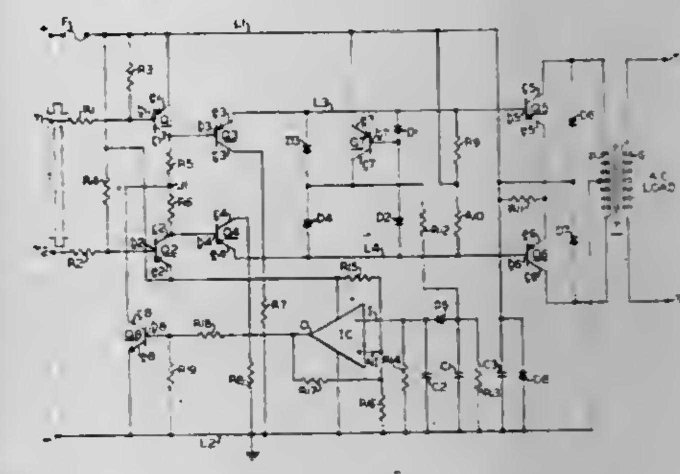

1. An electronic overload protection arrangement for a multiple-stage amplifying circuit comprising, a current-limiting circuit interconnected to the multiple-stage amplifying circuit for limiting the current during an overload condition, and a monitoring circuit connected with said current-limiting circuit and the multiple-stage amplifying circuit for monitoring the current-limiting action and for disabling the multiple-stage amplifying circuit when the duration of the current-limiting action exceeds a predetermined period of time.

4,301,491

COMBINED FAULT CURRENT AND APPLIED VOLTAGE TRIPPING FOR SOLID STATE TRIP CIRCUIT AND PARTICULAR CURRENT TRANSFORMER CONSTRUCTION

Carl E. Gryctko, Cherry Hill, N.J., assignor to Gould Inc., Rolling Meadows, Ill.

Filed Jan. 21, 1980, Ser. No. 113,944

Int. Cl.³ H02H *3/08*

U.S. Cl. 361—93 **9 Claims**

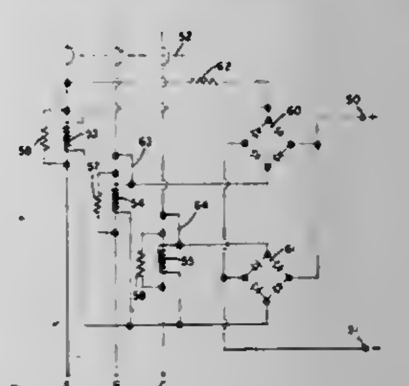

1. A trip circuit for a circuit breaker; said circuit breaker including a magnetic latch energizable to trip said circuit breaker; said trip circuit including a solid state trip circuit connected to said magnetic latch for operating said latch under given circuit breaker current conditions, and a sensing circuit coupled to the current through said circuit breaker and connected to said solid state relay circuit to provide input signals therefore related to the current flow through said circuit breaker; said sensing circuit including a saturable transformer producing output pulses having a length related to the magnitude of the current flow through said circuit breaker and a direct resistive connection to the lines connected to said circuit breaker whereby said direct resistive connection operates as the input to said solid state circuit under low overload condi-

tions and said saturable transformer acts as the input to said solid state circuit under relatively high overload conditions.

4,301,492
PRESSURE-SENSING TRANSDUCER
Maurice J. Paquin, 8330 Stansbury St., Panorama City, Calif. 91402, and James J. Radleigh, 2759 Harmony Pl., La Crescenta, Calif. 91214
Filed Jan. 28, 1980, Ser. No. 116,131
Int. Cl.³ H01G *7/00*
U.S. Cl. 361—283 13 Claims

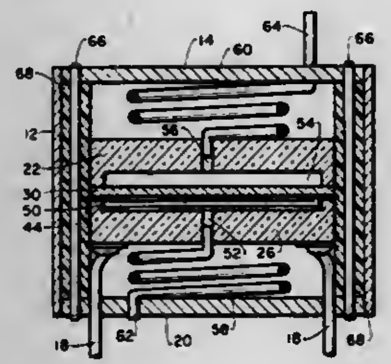

1. A pressure-sensing transducer comprising:
a first substantially rigid disc having a recessed face;
a second substantially rigid disc having a recessed face;
a flexible diaphragm sandwiched between said first and second discs forming first and second chambers;
first electrode means on one side of said diaphragm;
second electrode means on the wall of the recess opposite the electrodes on the diaphragm;
a housing surrounding and enclosing the sandwiched assembly of first and second discs and flexible diaphragm; and
means for connecting said first and second chambers to a source of fluid comprising flexible tubing adapted to isolate said assembly from external shocks.

4,301,493
INSULATOR MOUNTING FOR PANELBOARD
George E. Schweikle, and Harris I. Stanback, both of Lexington, Ky., assignors to Square D Company, Palatine, Ill.
Filed Feb. 7, 1979, Ser. No. 9,900
Int. Cl.³ H02B *1/04*
U.S. Cl. 361—355 11 Claims

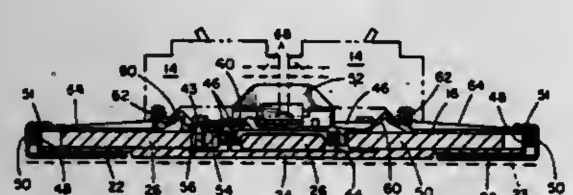

1. In a panelboard assembly including a center bus bar and an outer bus bar on each side and spaced from said center bus bar, each bus bar having one surface and an opposite other surface, and each electrically connected to a respective circuit breaker, each said breaker having an exit passage for transmitting ionized gas in response to the tripping of said breaker, each bus bar adapted to carry current of a different phase for transmission to a respective one of said circuit breakers, the improvement comprising:
a first insulating member in contiguous engagement with said one surface of each bus bar for insulating said bus bars from a cabinet back wall;
a second insulating member spaced from said first insulating member and supporting each circuit breaker with said exit passage facing toward a bus bar adapted to carry current of a phase different than the current transmitted to each said circuit breaker, said second insulating member including planar surface portions in coextensive overlapping engagement with said other surface of each bar and overlapped by each said circuit breaker with said planar portions located between each said circuit breaker exit passage and each bus bar to prevent said ionized gas exiting each said passage from engaging each said bus bar carrying current of a different phase in response to the tripping of each said circuit breaker;
a removable bus stab for each bus bar connected to said other surface of each respective bus bar and extending to a position intermediate said outer bus bars and connected to a respective circuit breaker, and an access passage in said second insulating member for each bus stab through which each respective bus stab is connected to its respective bus bar.

4,301,494
PRINTED CIRCUIT BOARD FACEPLATE ASSEMBLY
Thomas W. Jordan, Berkeley, Ill., assignor to Wescom, Inc., Downers Grove, Ill.
Filed Sep. 28, 1979, Ser. No. 79,709
Int. Cl.³ H05K *1/14*
U.S. Cl. 361—415 10 Claims

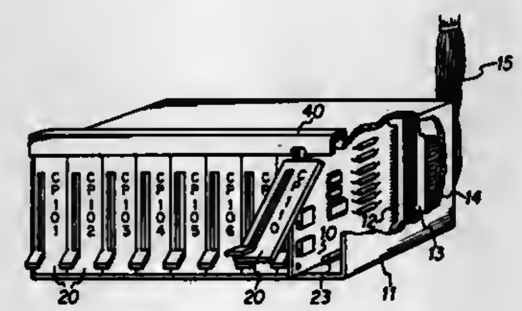

1. A latching faceplate assembly for use in combination with each of a plurality of spaced apart printed circuit boards and a housing into which said boards are inserted, said assembly comprising:
a channel formed along a frontal edge of the housing transverse to the boards contained within said housing, and a planar member for each board which extends substantially the entire length of the frontal edge thereof and projecting laterally from said frontal edge an amount sufficient to fill the interboard spacing so as to essentially close the housing frontal opening thereby protecting the housing contents, said planar member being pivotally mounted at one end thereof to a corner of said board, said planar member having an extended portion at its pivotal end which engages said channel so as to exert a lateral force on said board to aid board insertion into said housing when said planar member is pivoted toward the board edge and so that an opposite lateral force is exerted to aid extraction when said planar member is pivoted away therefrom.

4,301,495
PRINTED CIRCUIT BOARD SUPPORT STRUCTURE
Ralph Herman, Cherry Hill, N.J., assignor to RCA Corporation, New York, N.Y.
Filed Feb. 27, 1980, Ser. No. 125,117
Int. Cl.³ H05K *05/02*
U.S. Cl. 361—415 4 Claims

1. A printed circuit board support structure comprising:
an upstanding post,
first and second clamp members secured in spaced relation to said post,
a plurality of like printed circuit board receiving frames,
a like plurality of frame connecting means for rotatably securing each said frame vertical to said clamp members,
detent plate means secured to each said connecting means, and

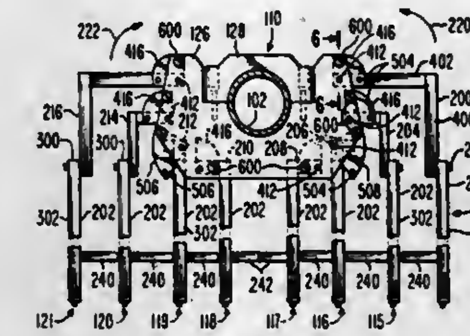

detent means on at least one of said clamp members mating with said plate means for selectively positioning said frame means in each of two vertical orthogonal positions.

4,301,496
USE OF AN INDUCTOR WITHIN A FULL BRIDGE D.C.-D.C. POWER CONVERTER
Albrecht Schwarz, North Caldwell, N.J., assignor to International Telephone and Telegraph Corporation, New York, N.Y.
Filed Sep. 19, 1979, Ser. No. 77,073
Int. Cl.³ H02M *1/12*
U.S. Cl. 363—17 13 Claims

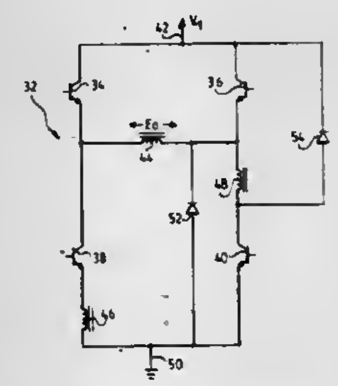

1. A circuit connected to the primary winding of a power transformer, said circuit adapted to receive a direct current input, including: a connecting means interconnecting said primary winding and direct current input; a choke filtering means having two windings interconnected with said connecting means and primary winding; and said connecting means capable of causing periodic change in the direction of direct current through the primary winding while periodically connecting separate choke windings thereto to develop an output while allowing the current to be filtered by the choke filtering means.

4,301,497
FLYBACK CONVERTER CONTROL WITH FEED FORWARD
Girish C. Johari, Round Rock, Tex., assignor to International Business Machines Corporation, Armonk, N.Y.
Filed Jun. 16, 1980, Ser. No. 159,560
Int. Cl.³ H02M *3/335*
U.S. Cl. 363—21 15 Claims

1. In a DC to DC converter having a flyback connected power transformer secondary winding, rectification, and filter circuit, and switching circuitry for selectively energizing the primary winding of said transformer, regulation circuitry comprising:
means for amplifying the difference between a portion of an output voltage of said power supply and a reference voltage to generate an error voltage;
means for generating a ramp voltage waveform having a ramp angle proportional to the sum voltage of a portion of said error voltage and a portion of a DC voltage applied to said converter;
means for inhibiting said means for generating said ramp voltage waveform regardless of ramp voltage magnitude and for maintaining said ramp voltage generating means in an inhibited state for a predetermined time duration;
means for comparing said error voltage with said ramp voltage waveform; and

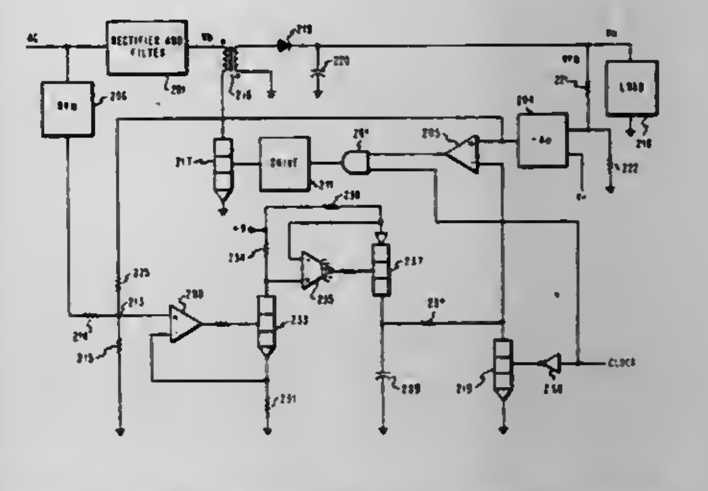

means, during the rising period of said ramp voltage, for applying a signal to said switching circuitry to energize said primary winding while said error voltage exceeds said ramp voltage.

4,301,498
VOLTAGE CONVERTER APPARATUS HAVING OUTPUT REGULATING MEANS
Michael Farrer, Linton, England, assignor to Gould Advance Limited, Essex, England
Filed Oct. 31, 1979, Ser. No. 90,030
Int. Cl.³ H02M *3/335*
U.S. Cl. 363—25 10 Claims

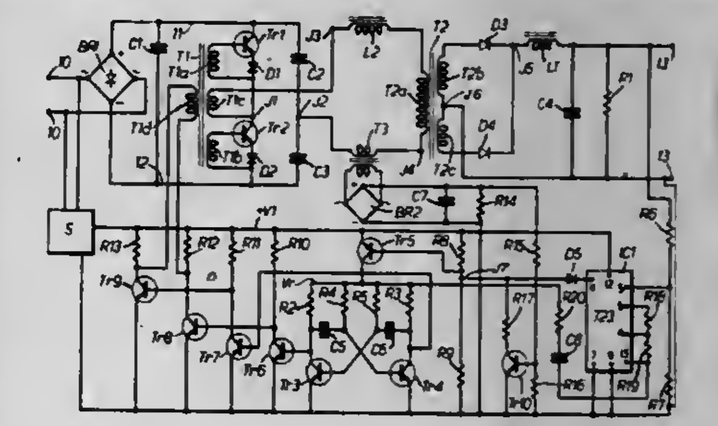

1. In a voltage converter system including
(a) switching circuit means including a pair of switching devices (Tr1, Tr2) connected with a unidirectional voltage source, each of said switching devices including a control terminal and being alternately operable between conducting and non-conducting conditions;
(b) converter transformer means (T1) for cyclically operating said switching devices between opposite conducting and non-conducting conditions, respectively, said converter transformer means including a pair of switching windings (T1a, T1b) connected with the control terminals of said switching devices, respectively said converter transformer means also including a load winding (T1c); and
(c) load circuit means for connecting said load winding with a pair of output terminals (13) adapted for connection with a load, whereby a periodically inverted voltage is produced across said load winding, said load circuit means including a load current path in which said load winding is connected in series, whereby the reflected load current flowing in said load current path and said load winding induces a corresponding voltage in that switching wind-

ing which is associated with the switching device that is conductive at a given time;

the improvement which comprises regulating means for maintaining the output voltage appearing across said output terminals at a regulated value, said regulating means including

(d) means in said load circuit means defining an inductance in series with said load winding, whereby owing to the rate of change characteristic of said inductance defining means, a variation in the reflected load current flowing through said load winding produces a corresponding change in the leading portion of the inductance current waveform, thereby to produce an opposite variation in the trailing waveform portion and in the complementary output voltage appearing across said output terminals; and

(e) means for varying the switching operation of said switching devices, said converter transformer means further including a control winding (T1d) magnetically coupled with said switching and load windings, said switching operation varying means including

(1) drive pulse generating means (Tr3, Tr4) for supplying drive pulses to said control winding to induce voltages in said switching windings for operating said switching devices between their conductive and non-conductive conditions, respectively; and

(2) short circuit means (Tr8, Tr9) for short circuiting said control winding to control the instants of switching of said switching devices.

4,301,499

INVERTER CIRCUIT WITH CURRENT EQUALIZATION

Samuel Levinson, Norwalk, Conn., assignor to The United States of America as represented by the Secretary of the Army, Washington, D.C.

Filed Jan. 13, 1980, Ser. No. 159,407

Int. Cl.³ H02P *13/22*

U.S. Cl. 363—26 **10 Claims**

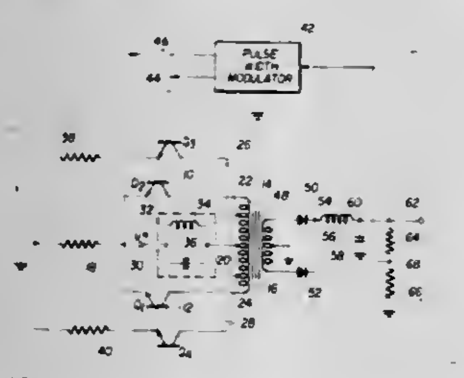

1. Circuit means for equalizing the respective currents flowing alternately in two halves of a double-ended, push-pull DC to DC inverter, comprising in combination:

an inverter transformer having a primary winding including a center tap and a secondary winding;

means for receiving a DC supply potential;

a pair of switching devices respectively coupled to opposite ends of said primary winding;

control circuit means generating periodic signals of a predetermined fundamental operating frequency coupled to said switching devices for rendering said devices alternately conducting and non conducting in a mutually opposite sense; and

a parallel resonant network coupled between said center tap of the primary winding and said means for receiving the DC supply potential, said resonant network having a resonant frequency substantially equal to said fundamental operating frequency and being operable thereby to produce balanced currents in said pair of switching devices and accordingly the primary winding of said inverter transformer.

4,301,500

GATE CONTROL SYSTEM OF THE INVERTER USING GATE-TURN-OFF THYRISTORS

Nagataka Seki, Fuchu, and Yukinori Tsuruta, Sagamihara, both of Japan, assignors to Tokyo Shibaura Denki Kabushiki Kaisha, Kawasaki, Japan

Filed Feb. 19, 1980, Ser. No. 122,826

Claims priority, application Japan, Feb. 20, 1979, 54-18730

Int. Cl.³ H02H *7/122*

U.S. Cl. 363—58 **9 Claims**

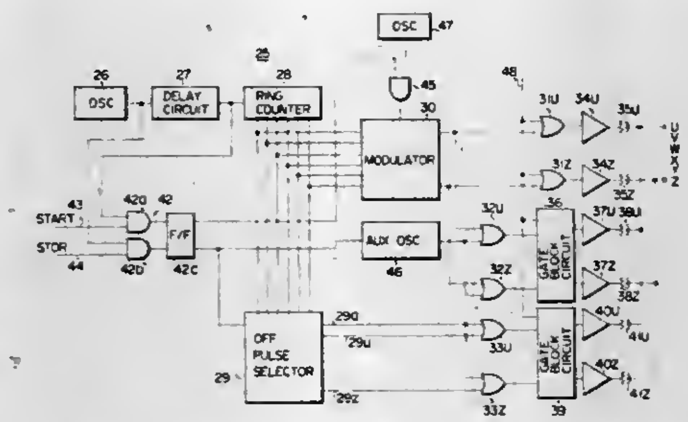

1. A gate control system of the inverter for generating AC output of a predetermined frequency and having plural GTO thyristors connected in a predetermined manner comprising:

a means for generating a first pulse signal on which the frequency of the AC output is based;

a means for generating a second pulse signal delayed for a predetermined period of time from the first pulse signal;

a phase reference signal generating means for generating responsive to the second pulse signal a reference signal corresponding to the phase of the AC output of the inverter;

an ON pulse generating means synchronizing with the second pulse and the phase reference signal to generate ON pulses corresponding to the GTO thyristors, respectively;

an OFF pulse generating means synchronizing with the first pulse and the phase reference signal to generate OFF pulses after the ON pulses;

a negative bias signal generating means for generating negative bias signals after the OFF pulses;

an operation stop means synchronizing with the first pulse to supply the OFF pulses and then the negative bias signals to the GTO thyristors at the time when the operation of the inverter is to be stopped; and

a commutation failure protecting means for supplying the ON pulses to the GTO thyristors at the time of commutation failure.

4,301,501

CAPACITOR RATIO MULTIPLIER

Larry E. Carter, Westminster, and Robert M. Ashby, Pasadena, both of Calif., assignors to American Telecommunications Corporation, El Monte, Calif.

Filed May 2, 1980, Ser. No. 146,058

Int. Cl.³ H02M *3/06*

U.S. Cl. 363—62 **11 Claims**

1. A capacitor ratio multiplier circuit comprising:

switched capacitor means;

sharing capacitor means for sharing charge with the switched capacitor means;

first switch means for enabling the switched capacitor means to receive charge, said first switch means capable of coupling the switched capacitor means to the sharing capacitor means for sharing charge therewith in accordance with their respective capacitances, said first switch means

capable of enabling the switched capacitor means to deliver its remaining charge; and

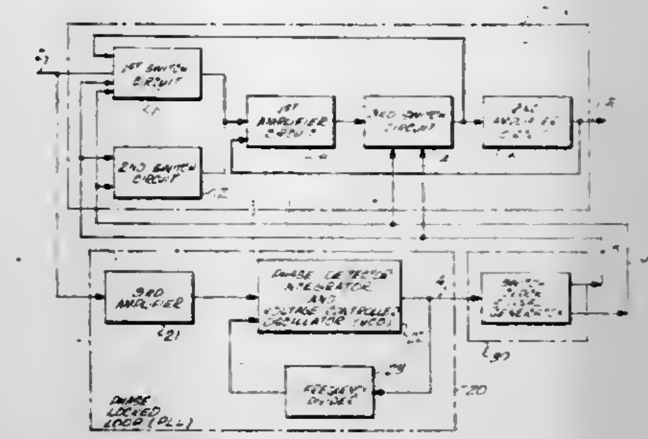

second switch means for discharging the sharing capacitor means.

4,301,502

ISOLATED D.C. VOLTAGE REGULATING APPARATUS

Raymond Jacquet, Paris, France, assignor to Thomson-CSF, Paris, France

Filed Dec. 28, 1978, Ser. No. 973,951

Claims priority, application France, Jan. 3, 1978, 78 00050

Int. Cl.³ H02P *13/00*

U.S. Cl. 363—79 **2 Claims**

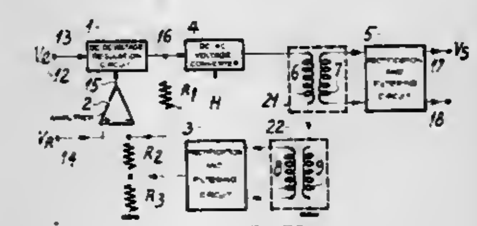

1. An isolated D.C. voltage regulating apparatus comprising:

a D.C. - D.C. voltage regulation circuit having an input for receiving a D.C. voltage to be regulated, a control input, and an output;

a D.C. - A.C. voltage converter having an input coupled to the output of said D.C. - D.C. voltage regulation circuit and an output;

first, second and third resistors;

an error amplifier having a first input for receiving a reference voltage, a second input coupled to the output of said D.C. - D.C. voltage regulator through said first resistor and an output coupled to the control input of said D.C. - D.C. voltage regulation circuit;

a voltage transformer having a primary winding coupled to the output of said D.C. - A.C. voltage converter and a secondary winding;

a first rectification and filtering circuit coupled to the secondary winding of said voltage transformer, for supplying a regulated output for said isolated D.C. voltage regulating apparatus;

a current transformer having a primary winding coupled in series between the primary winding of said voltage transformer and ground and a seconday winding; and

a second rectification and filering circuit having an input coupled to the secondary winding of said current transformer and an output coupled to the second input of the error amplifier through the second resistor and to the ground through the third resistor.

4,301,503

HOME COMPUTER AND GAME APPARATUS

Jeffrey E. Frederiksen, Arlington Heights, Ill., assignor to Bally Manufacturing Corporation, Chicago, Ill.

Continuation-in-part of Ser. No. 812,662, Jul. 5, 1977, which is a continuation of Ser. No. 635,406, Nov. 26, 1975, abandoned.

This application May 30, 1978, Ser. No. 910,964

Int. Cl.³ G06F *3/153*

U.S. Cl. 364—200 **36 Claims**

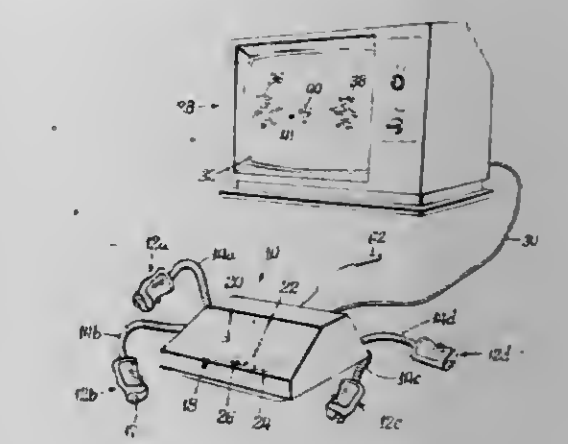

1. A system for providing a display signal to a raster scan display for displaying thereon a matrix of discrete picture elements, each picture element being defined as a line segment of a horizontal line on the display, the system comprising:

a random access display memory having a unique storage location for each discrete picture element of the display for storage of digital memory data signals representative of the picture elements of the display;

a processor comprising means for receiving a plurality of groups of picture element signals, each picture element signal comprising a memory address signal and a memory data signal which together correspond to one particular picture element of the display, each group of picture element signals corresponding to a plurality of picture elements representing a symbol located at a predetermined location on the display, said processor generating control signals;

first addressing means for sequentially and repetitively addressing the storage locations of the display memory, reading the memory data signals stored therein, and supplying the display signal to the display for displaying thereon the picture elements representative of the memory data signals stored in the display memory;

video processing means operatively coupled to the processor for receiving therefrom both said picture element signals and said control signals, said control signals activating the video processing means for transforming a group of picture element signals to produce a transformed group of picture element signals so that a symbol as displayed on the display corresponding to the transformed group of picture element signals is different than a symbol as displayed on the display corresponding to the original group of picture element signals; and

transfer means for transferring picture element signals from the video processing means to the display memory whereby memory data signals corresponding to said picture element signals are stored in memory locations of the display memory as determined by the memory address signals corresponding to said picture element signals, said transfer means for transferring the transformed group of picture element signals from the video processing means to the display memory without processing the transformed group of picture element signals with the processor.

4,301,504

INPUT-OUTPUT APPARATUS FOR A MICROPROCESSOR

Georg Haubner, Berg, and Jürgen Wesemeyer, Nuremberg, both of Fed. Rep. of Germany, assignors to Robert Bosch GmbH, Stuttgart, Fed. Rep. of Germany

Filed Mar. 20, 1979, Ser. No. 22,103

Claims priority, application Fed. Rep. of Germany, Mar. 21, 1978, 2812241

Int. Cl.³ G06F *9/22*

U.S. Cl. 364—200 **2 Claims**

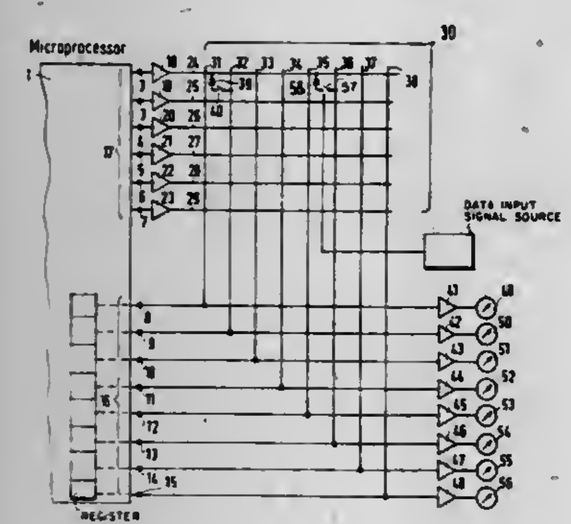

1. Input-output system for a microprocessor, said microprocessor having a first (17) set of output terminals and a second (16) set of output terminals, said system comprising
a plurality of first lines (24–29);
first connecting means (18–23) for connecting each of said plurality of first lines to a respective output terminal of said first set of output terminals;
a plurality of second lines (31–38) each connected to a respective output terminal of said second set of output terminals;
a plurality of indicator means (49–56);
second connecting means (41–48) for connecting each of said indicator means to a respective output terminal of said second set of output terminals and, thereby, to a respective one of said plurality of second lines;
wherein said microprocessor (1) includes means for imposing a binary signal having a first level on each of said plurality of first lines in turn during a data input time interval and binary signals having a second level on all of said plurality of first lines during a data output time interval substantially exceeding said data input time interval;
wherein said microprocessor further includes means for imposing an output signal at each output terminal of said second set of output terminals only during said data output time interval;
and further comprising a plurality of logic circuits each comprising switch means (40,57) open and closed in the respective absence and presence of a data input signal, and unidirectional conducting means for blocking transmission of binary signals of said second level and permitting transmission of binary signals of said first level from a said first to a said second line, whereby a first level binary signal is transmitted from each of said first lines in turn to output terminals of said second set selected by said data input signals during said data input time interval.

4,301,505

MICROPROCESSOR HAVING WORD AND BYTE HANDLING

Robert D. Catiller, Garden Grove, and Brian K. Forbes, Huntington Beach, both of Calif., assignors to Burroughs Corporation, Detroit, Mich.

Filed Jun. 27, 1979, Ser. No. 52,478

Int. Cl.³ G06F *3/04*

U.S. Cl. 364—200 **10 Claims**

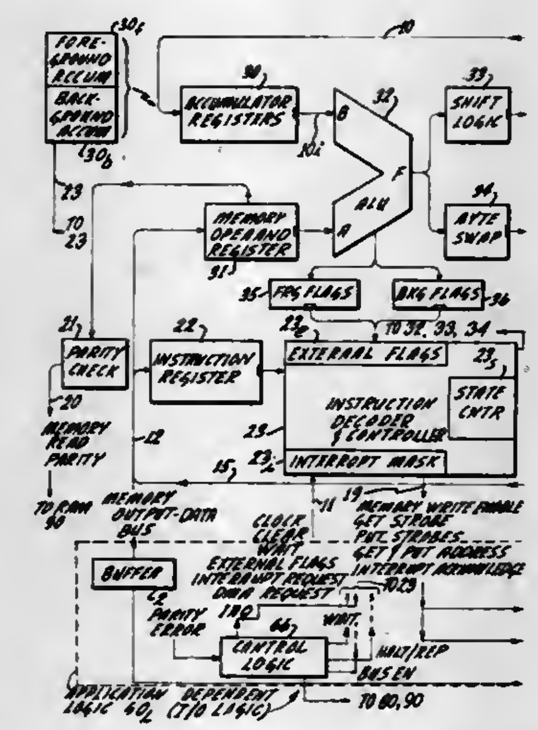

1. A microprocessor system which cooperates with an application-dependent logic module to form a universal-type peripheral-controller capable of handling data transfers between a host computer and a plurality of peripheral terminal units which can be either "word-oriented" or "byte-oriented", and wherein said application-dependent logic module provides external register means having bus connections to said plurality of peripheral terminal units and to said host computer, and wherein said application-dependent logic means further includes an external memory for storage of programs related to control of said peripheral terminal units and for storage of data undergoing transfer, and wherein said application-dependent logic module further includes control logic means for communicating with and controlling said external register means, said external memory and said microprocessor system, the said microprocessor system comprising:
(a) data processing means including:
(a1) an Arithmetic Logic Unit providing an output to a shift logic circuit and to a byte-swap circuit;
(a2) said shift logic circuit providing output to an I/O bus, said shift logic circuit functioning to rotate one or more bits of a word being processed to the right or to the left;
(a3) said byte swap circuit providing output to said I/O bus, said byte swap circuit functioning to exchange the sequential positions of the higher order byte and the lower order byte of a received two-byte word;
(b) said I/O bus providing connecting lines from said data processing means to said external registers, to said external memory, to an accumulator register means, and to an addressing means;
(c) addressing means receiving input data from said I/O bus and storing addresses useful for accessing data from an internal memory or said external memory, said addressing means including:
(c1) a program counter connected to said I/O bus for storing consecutive addresses of data in said internal program memory;
(c2) a memory reference register connected to said I/O bus for storing addresses of data in said external memory, and including:

(c2-1) a memory address bus which connects to said external memory;
(c2-2) and wherein a dedicated non-address bit (byte-select bit) in said memory reference register being set to signal a decoder-controller to initiate a byte-swap operation in said byte-swap circuit, or when not-set, to pass data without a byte-swap operation;
(c2-3) a bus connection from said memory reference register to said decoder-controller;
(d) said internal program memory storage for storing program instructions and data words, said internal memory being addressed from said program counter and providing instruction words and data, via an instruction bus, to an instruction register and memory operand register;
(e) register means for temporary storage of data, said register means including:
(e1) said accumulator register means which includes a plurality of accumulator registers which provide an output to the input of said Arithmetic Logic Unit, said accumulator registers receiving input data words from said I/O bus, said plurality of accumulator registers connected by means of an: address bus means from said decoder-controller for addressing selected accumulator registers in said plurality of accumulator registers;
(e2) said memory operand register for receiving operand data from said internal program memory storage via said instruction bus or from said external memory via a memory data bus;
(e3) said instruction register for receiving instruction words from said internal program memory storage via said instruction bus and providing said instruction words to said decoder-controller;
(f) said instruction decoder-controller receiving instruction signals from said instruction register, and including incoming and outgoing control signal lines connected to said data processing means, to said addressing means, to said register means, to said internal and external memory means, to said external registers and said control logic means;
(g) and wherein said register means, said internal program memory storage, and said external memory are organized into word locations of 16-bits and each word is symbolically designated as AB to indicate the two 8-bit bytes;
(h) and wherein said microprocessor system includes means whereby during the byte-oriented operation, which will access the lower order byte only placed on said I/O bus;
(i) and wherein said byte-swap circuit includes means to position a desired byte of data, which is located in the higher order position A of AB, into the lower order position, as BA, to make it available for handling as a single byte of data, said position-swapping of byte-data locations occurring only when said dedicated non-address bit in said memory reference register is SET;
(j) said memory data bus for carrying data from said external memory to said instruction register and said memory operand register.

4,301,506

AUTO ROUTING COMPUTER FOR ELIMINATING THE NEED FOR MAPS OR TRAVEL INSTRUCTIONS

Daniel J. Turco, 409 Boston Rd., Billerica, Mass. 01821

Filed Jul. 7, 1980, Ser. No. 166,648

Int. Cl.³ G06F *15/50*

U.S. Cl. 364—436 **4 Claims**

1. A method of eliminating the use of maps or other instructions by the operator of a motor vehicle who wishes to travel from a given point of origin over a selected route terminating at a point of ultimate destination comprising:
A. providing a data processor completely contained within said motor vehicle for generating a given plurality of sets of data, each set representing a particular route within a given geographical area and each set including a plurality of data subsets, each subset including data indicative of a particular subroute to be taken in traversing said particular route, said data processor further including:
a1. a manually operated route establishing input device for generating data indicative of the point of origin and the point of ultimate destination of said selected route;
a2. selection means responsive to the manual actuation of said route establishing input device for selecting a particular selected set of said sets of data and for enabling the sequential generation of said plurality of data subsets making up said particular selected set of data;
a3. a manually operated fetch next subroute input device for instructing said data processor to fetch the next data subset indicative of the next subroute, of said selected set of said sets of data;

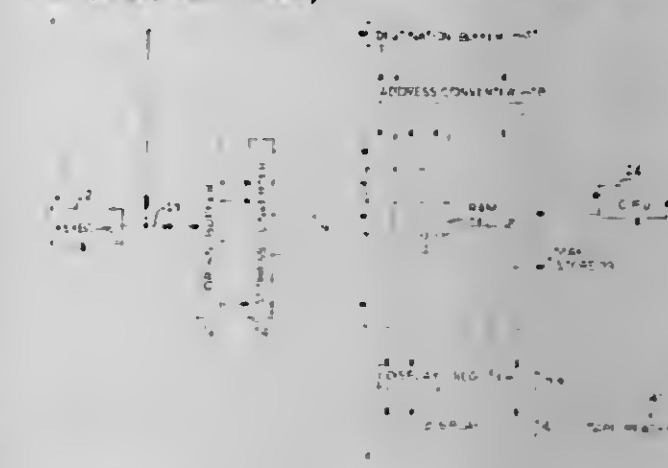

a4. output means responsive to the manual actuation of said fetch next subroute input device and the resulting generation of said next data subset for indicating to said operator the next subroute to be taken;
B. manually actuating said route establishing input device to enable the generation of a plurality of data subsets of said selected data set;
C. manually actuating said fetch next subroute input device upon the arrival of said motor vehicle at the point of origin of the next subroute for causing said output means to indicate to said operator the next subroute; and,
D. manually actuating for a second time said fetch next subroute input device upon the arrival of said vehicle at the point of origin of the following subroute and so on until said motor vehicle arrives at said ultimate destination.

4,301,507

ELECTRONIC POSTAGE METER HAVING PLURAL COMPUTING SYSTEMS

John H. Soderberg, Monroe, N.Y.; Alton B. Eckert, Norwalk, and Robert B. McFiggans, Stamford, both of Conn., assignors to Pitney Bowes Inc., Stamford, Conn.

Filed Oct. 30, 1979, Ser. No. 89,413

Int. Cl.³ G06F *15/02, 15/20, 15/16*

U.S. Cl. 364—464 **31 Claims**

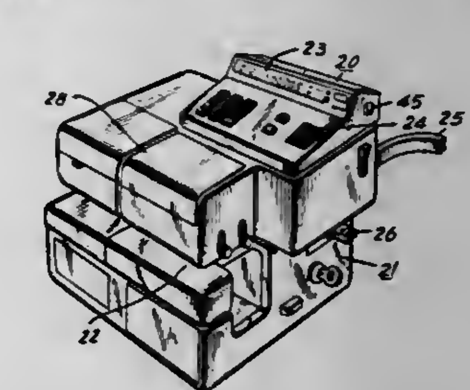

1. An intercommunication system having a plurality of units, wherein each of said units has a computing system, a signal receiving terminal and a signal transmitting terminal, the trans-

mitting and receiving terminals of each one of said units being connected to the receiving and transmitting terminals of another of said units, each of said units having a stable clock, each unit having means for transmitting messages by way of its transmitting terminal asynchronously in a serial message format of bit groupings of a determined number of bits and with start and stop bit, and the bits of the groupings having determined constant relative timing and said units further comprising means for sampling their receiving terminals at predetermined times for receiving sent messages, and means sampling their receiving terminals to enable the transmission of messages by way of their transmitting terminals.

4,301,508

DIGITAL PROCESSING SYSTEM FOR TIME-OF-DAY AND DEMAND METER DISPLAY

John A. Anderson, Mequon; Richard C. Born, Wauwatosa; Frank A. Knopf, Milwaukee; Richard R. Sabroff, Lake Mills; Herman P. Schutten, Elm Grove, and Donald L. Van Zeeland, Franklin, all of Wis., assignors to Eaton Corp., Cleveland, Ohio

Filed Mar. 28, 1979, Ser. No. 24,680

Int. Cl.³ G06F *15/20*; G01R *19/165*

U.S. Cl. 364—483 12 Claims

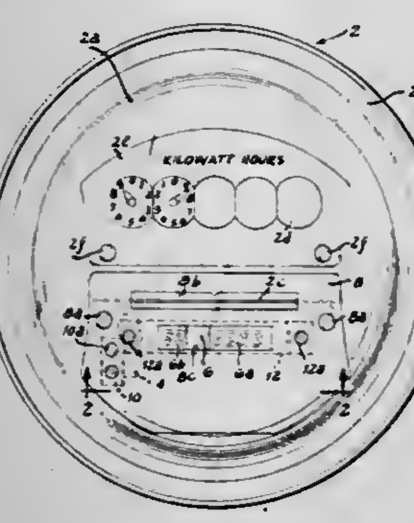

1. A digital processing A.C. electric energy metering and display system comprising:
a kilowatthour meter comprising a transparent cover and a rotary disc and means responsive to the voltage and current on an A.C. power line for rotating said disc in accordance with the electric energy usage at a consumer station supplied by said power line so that each rotary increment of said disc represents a predetermined quantity of A.C. electric energy, said disc having a mark thereon that is detected when it has moved through said rotary increment to reach a given point;
a radiant energy detector having means for monitoring said given point without imposing any forces on said meter disc so as not to effect disc calibration or metering accuracy and for providing an input electric signal each time said mark passes said given point for use in said system;
mounting means on said meter for mounting said radiant energy detector in proper orientation with respect to said disc within said transparent cover so as to detect said mark as it passes said given point;
a plural digit electronic display and means supporting the same on said mounting means so that it can be viewed through said transparent cover of the meter;
a microcomputer comprising:
memory means for storing data;
a program stored in said memory means;
a microprocessor connected to said memory means;
and output port means for outputting data to said display in said meter under the control of said microprocessor;
timing signal interfacing means responsive to said power line voltage frequencey for providing timing pulses including means providing a predetermined number of logic level time-keeping pulses per second to said microprocessor;
control means comprising energy signal interfacing means responsive to said input electric signal from said meter disc mark detector and comprising also said micro-processor responsive to said time-keeping pulses and said program for calculating the day of the week, the time of day, the total watthours and/or kilowatthours of energy used, and the peak interval watthours and/or kilowatthours used and for registering the same;
said control means also comprising peak demand means responsive to said input electric signal from said meter disc mark detector and said time-keeping pulses and said program for calculating the peak power demand in kilowatts during one of a multiplicity of demand periods of predetermined programmed length and the day of the week and time of such peak power demand and for registering the same for display;
and said control means comprising means for sequentially transferring data including said total watthours and/or kilowatthours and said peak interval watthours and/or kilowatthours and said peak demand kilowatts and said day and time of peak demand to said plural digit electronic display along with respective identification numbers separated therefrom on said display in a predetermined automatic manner.

4,301,509

METHOD FOR COOKING MEAT OR POULTRY IN THERMAL OVEN

Michael A. Haase, Euclid, Ohio; Edward B. Miller, West Warwick, R.I.; Charles W. Eichelberger, Schenectady, N.Y.; Scott E. Cutler, Niskayuna, N.Y., and Robert J. Wojnarowski, Clifton Park, N.Y., assignors to General Electric Company, Schenectady, N.Y.

Filed Nov. 13, 1979, Ser. No. 93,685

Int. Cl.³ G06F *15/20*; H05B *1/02*

U.S. Cl. 364—557 17 Claims

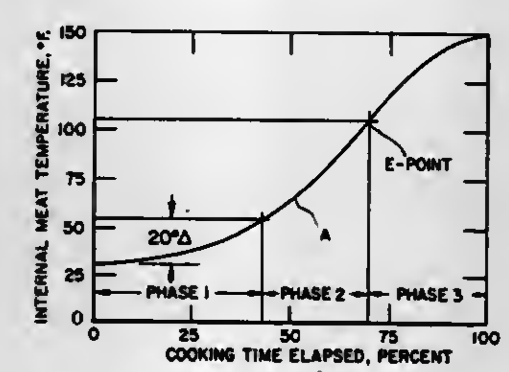

1. A method for automatically cooking meat or poultry with a thermal oven to a desired degree of doneness by a selected time, comprising the steps of:
(a) measuring, at predetermined intervals, the elapsed time since cooking has begun;
(b) measuring, at at least two values of elapsed cooking time, the temperature of the meat or poultry being cooked;
(c) using the at least two measurements of temperature and the associated cooking time values obtained in step (b) to project what the temperature of the meat or poultry will be at a later time, which later time is earlier than said selected time;
(d) comparing the projected temperature obtained in step (c) with a standard temperature, said standard temperature being essentially the temperature said material should have at said later time in order to finish cooking at said selected time with said desired degree of doneness; and
(e) modifying the temperature of said thermal oven as a function of the result of the step (d) comparison of said projected temperature and said standard temperature to modify the rate at which said meat or poultry is cooking.

4,301,510

WEIGH FEEDER SYSTEM

Ronald J. Ricciardi, Garfield; Angelo Ferrara, Fairfield, and Joseph L. Hartmann, West Caldwell, all of N.J., assignors to Acrison, Incorporated, Moonachie, N.J.

Continuation of Ser. No. 913,203, Jun. 6, 1978, Pat. No. 4,210,963, which is a continuation of Ser. No. 803,251, Jun. 3, 1977, abandoned, which is a continuation of Ser. No. 678,391, Apr. 19, 1976, Pat. No. 4,054,784, which is a continuation-in-part of Ser. No. 587,869, Jun. 18, 1975, abandoned. This application Apr. 18, 1980, Ser. No. 141,343

Int. Cl.³ G01G *11/08*; G06F *15/46*

U.S. Cl. 364—567 8 Claims

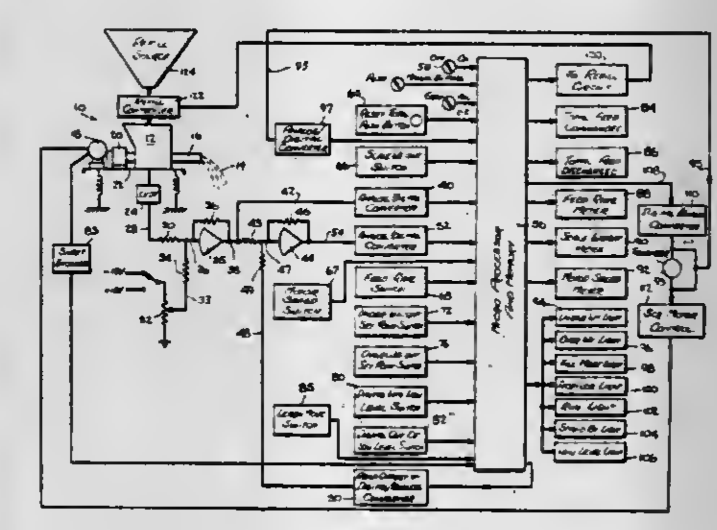

1. A weigh feeding machine comprising
a container for a substance;
discharge means for discharging the substance from the container at a controllable feed-out rate;
storage means for storing a first electrical signal corresponding to the desired feed-out rate;
means for sensing the weight of at least the substance being discharged and for producing a second electrical signal having a characteristic which corresponds to the value of said weight and changes for the different values of weight sensed;
digital circuit means for sampling the second electrical signal a plurality of times during each of a succession of time intervals;
storage means for storing the samples of said second electrical signal during each time interval;
digital computer means for computing a feed-out rate during each such time interval, from the samples taken during one such time interval, and for comparing an electrical signal representative of said computed feed-out rate with the first electrical signal representative of said desired feed-out rate, for producing, as a result of said comparison, a control electrical signal indicative of the desired changes, if any, in the feed-out rate of the discharge means; and
control means for controlling the discharging means in accordance with said control electrical signal to thereby maintain the feed-out of the substance from the container at the desired feed-out rate.

4,301,511

PROGRAMMABLE CALCULATOR WITH A DEVICE FOR CONTROLLING THE READING OF PROGRAM DATA

Tomohiro Shimizu, Fussa, and Yoshinobu Muranaga, Kurume, both of Japan, assignors to Casio Computer Co., Ltd., Tokyo, Japan

Filed Dec. 4, 1979, Ser. No. 100,054

Claims priority, application Japan, Dec. 8, 1978, 53-151849

Int. Cl.³ G06F *15/02*, *3/14*

U.S. Cl. 364—709 9 Claims

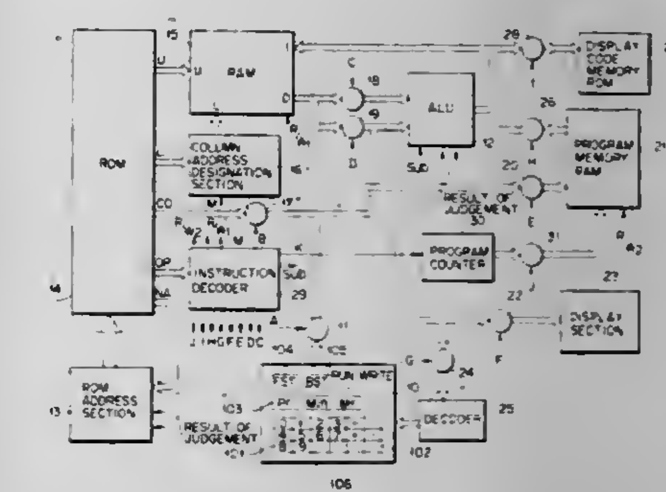

1. A programmable calculator with a device for controlling the reading of program data, comprising:
input means having ten keys for entering numeral data, a plurality of function keys for entering function data, at least one specified key for reading out program data and a manually operable switch for designating at least a program data writing mode;
a data memory coupled to said input means for storing at least numeral data and function data;
an arithmetic unit coupled to said data memory for executing an operation on data and for returning the data to said data memory;
a program data memory means for storing program data which are entered by selectively operating at least one of said ten keys and function keys when said program data writing mode is designated by the operation of said manually operable switch;
program data reading means coupled to said program data memory means for reading the program data from said program data memory means as a function of the operation of said specified key;
display means coupled to said program data memory means and to said data memory for displaying the selected program data in the program data memory means or the selected data in the data memory;
detection means associated with said data memory and with said arithmetic unit for detecting that said specified key is kept operated for a period of time longer than a predetermined period of time; and
control means coupled to said detection means and to said program data reading means for controlling said program data reading means when said detection means detects that said specified key has been kept operated for a said period of time longer than said predetermined period of time, to cause said program data reading means to continuously read said program data from said program data memory means.

4,301,512

TEST DEVICE FOR BLOOD PRESSURE MONITOR

Everette R. Keith, Southfield; Kenneth J. Cook, Troy; Joseph S. Power, Fraser, and Frederick B. Ruzzala, Sterling Heights, all of Mich., assignors to The Valeron Corporation, Troy, Mich.

Filed Nov. 9, 1979, Ser. No. 93,087

Int. Cl.³ G06G *7/48*

U.S. Cl. 364—801 **15 Claims**

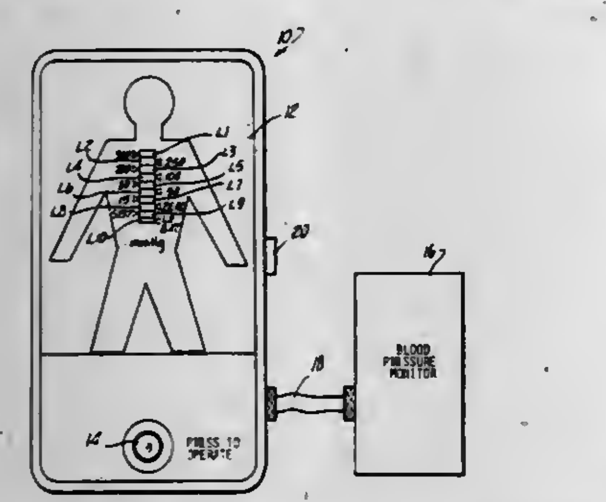

1. A device for testing the operability of a blood pressure monitor, said device comprising:

generator means for selectively generating a plurality of output signals, each output signal having a different signal level corresponding to preselected static blood pressure levels for testing the operability of the blood pressure monitor;

a plurality of display devices, each device corresponding to one of the preselected static blood pressure levels;

a push button switch;

control means coupled to said switch, said generator means, and to said display devices, said control means providing control signals operative for simultaneously selecting a different blood pressure level output signal for generation by said generator means and for energizing its corresponding display device upon each sequential activation of the switch.

4,301,513

LOGIC STATE ANALYZER WITH RESTART AND STATE OCCURRENCE QUALIFICATION

George A. Haag, Colorado Springs; O. Douglas Fogg, Loveland; Gordon A. Greenley; Steve A. Shepard, both of Colorado Springs, all of Colo., and F. Duncan Terry, Meridan, Id., assignors to Hewlett-Packard Company, Palo Alto, Calif.

Division of Ser. No. 828,138, Aug. 29, 1977, abandoned. This application May 22, 1979, Ser. No. 41,362

Int. Cl.³ G06F *3/153, 7/00*

U.S. Cl. 364—900 **4 Claims**

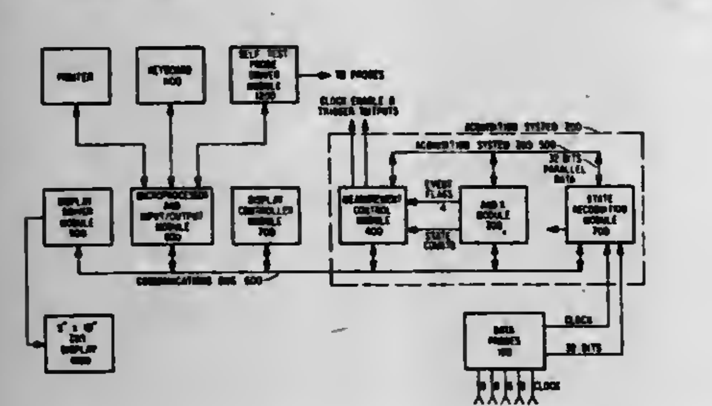

1. Apparatus for selecting, storing and displaying a sequence of states occurring in a collection of digital signals, the apparatus comprising:

control means for designating an integer J, an integer K, a trigger state and a qualifier state, and for designating a display format for stored states;

input means coupled to receive the collection of digital signals for performing signal conditioning thereon according to preselected thresholds and polarities to produce a collection of conditioned signals;

trigger means coupled to the collection of conditioned signals and to the control means for producing a trigger signal upon the Jth occurrence of the designated trigger state;

storage qualification means coupled to the collection of conditioned signals and to the control means for producing a qualification signal upon the Kth occurrence of the designated qualifier state;

storage means including a circular buffer, the storage means coupled to the collection of conditioned signals, to the trigger signal and to the qualification signal for storing in consecutive locations in the circular buffer the series of those designated qualifier states producing qualification signals, and upon the occurrence of the trigger signal, storing the designated trigger state in the next consecutive location of the circular buffer;

format conversion means coupled to the control means and to the storage means for generating in response to the display format designated with the control means a collection of formatted signals for each state stored in the storage means, each collection of formatted signals indicative of a partition of the collection of signals into groups, of an ordering of the signals within the groups and of a numerical value for each group according to a pre-selected radix for each group; and

display means coupled to receive the collection of formatted signals, for displaying the sequence of stored states.

4,301,514

DATA PROCESSOR FOR PROCESSING AT ONE TIME DATA INCLUDING X BYTES AND Y BITS

Yoshiaki Eifuku; Kazunobu Mimura, both of Hadano, and Yasuyuki Okada, Sagamihara, all of Japan, assignors to Hitachi, Ltd., Tokyo, Japan

Filed Sep. 25, 1979, Ser. No. 78,723

Claims priority, application Japan, Apr. 16, 1979, 54-46460

Int. Cl.³ G06F *7/38*

U.S. Cl. 364—900 **6 Claims**

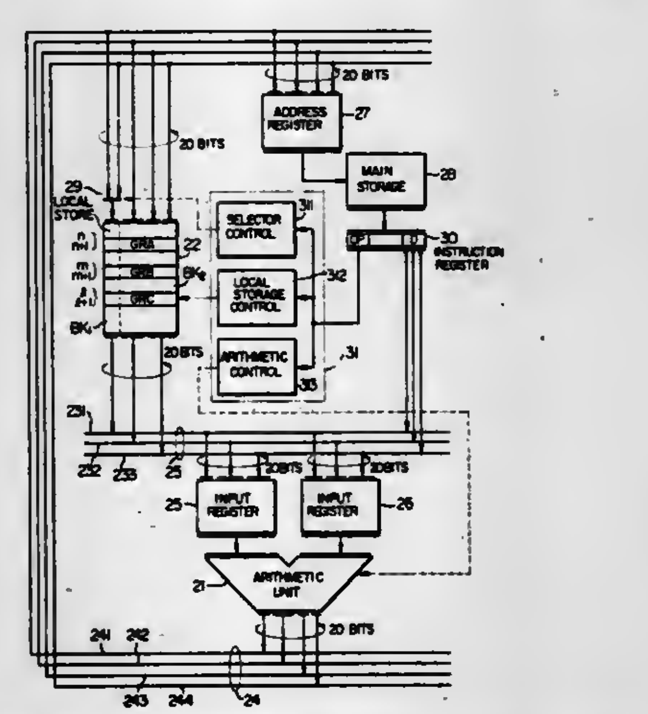

1. A data processor comprising:

a memory unit in which each word has the number of bits including X bytes+Y bits, and two words form one register;

means for loading data to be loaded into the lower Y bits in the upper word also into the upper Y bits in the lower word when the result of the operand arithmetic is loaded into said register;

an arithmetic unit capable of processing data in numbers of bits including X bytes+Y bits at a time; and

means for reading out X bytes in the upper and lower words of said register separately when the data in said register is inputted into said arithmetic unit for executing the operand arithmetic.

4,301,515

VARIABLE TIMING SYSTEM

Robert J. Fahey, Framingham; Robert A. Norbedo, North Andover, and Martin L. Resnick, Chestnut Hill, all of Mass., assignors to GTE Products Corp., Stamford, Conn. and GTE Laboratories Inc., Waltham, Mass.

Filed Nov. 14, 1979, Ser. No. 94,246

Int. Cl.³ G06F *1/00*

U.S. Cl. 364—900 **33 Claims**

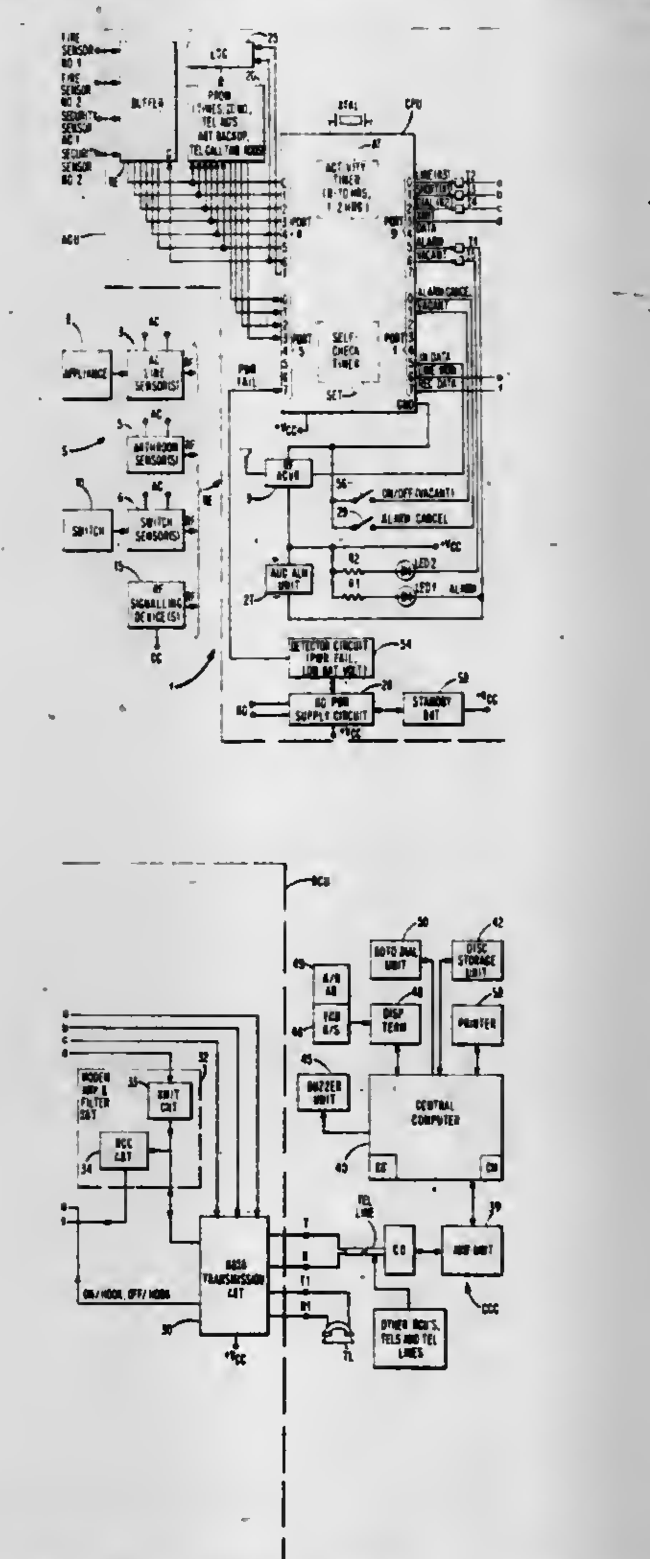

1. A variable timing system comprising:

first and second apparatus at first and second locations, respectively, and interconnected by a transmission medium for allowing bidirectional communication between the first and second apparatus;

said first apparatus at the first location comprising:

first storage means for storing count data therein related to a predetermined period of time; and

communication means operative under prescribed conditions to establish communication with the second apparatus at the second location over the transmission medium;

said second apparatus at the second location comprising:

second storage means for storing count data therein having a value corresponding to a predetermined period of time;

means capable of varying the value of the count data within the second storage means to either increase its value or decrease its value thereby to correspond to an increased or decreased period of time, respectively; and

extraction means operative following the establishing of communication with the second apparatus to extract from the second storage means the existing count data stored therein and to communicate this count data via the transmission medium to the first apparatus; and

said first apparatus further comprising:

count receiving means operative to receive the count data from the second apparatus and to cause the count data to be applied to and stored in the first storage means.

4,301,516

BUBBLE MEMORY STORAGE UNIT

William C. Ellsworth, Satellite Beach, Fla., assignor to NCR Corporation, Dayton, Ohio

Filed Dec. 12, 1979, Ser. No. 102,682

Int. Cl.³ G11C *19/08*

U.S. Cl. 365—15 **10 Claims**

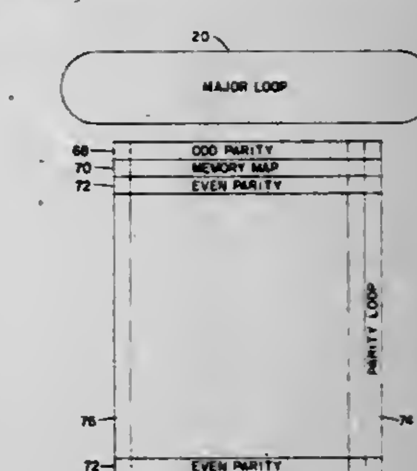

1. A magnetic domain memory device comprising:

a domain propagation structure including magnetic elements disposed in an arrangement on which magnetic domains propagate along a major path in response to a rotating magnetic field;

a plurality of storage loops adjacent said major path in which one or more of the storage loops are defective;

means for transferring said magnetic domains between said major path and said storage loops;

and means for inhibiting the use of said defective storage loops including:

a plurality of first pages of data disposed in a column bit position in each of said minor loops having a first predetermined number of magnetic domains, a second page of data disposed in a common bit position in each of said storage loops and comprising a series of magnetic domains and voids representing the location of said defective storage loops, and

a third page of data disposed in a common bit position in each of said storage loops having a second predetermined number of magnetic domains different from said first predetermined number, said first and third pages of data comprise the data stored in said memory device.

4,301,517
REPLICATE/TRANSFER BUBBLE DOMAIN SWITCH
Isoris S. Gergis, Yorba Linda, Calif., assignor to Rockwell International Corporation, El Segundo, Calif.
Filed Sep. 29, 1978, Ser. No. 946,936
Int. Cl.³ G11C *19/08*
U.S. Cl. 365—16 **15 Claims**

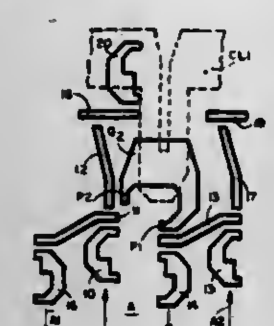

1. An active replicate/transfer switch for magnetic bubble domain systems comprising:
first and second propagation path means;
corner element means included in said first propagation path means;
conductor means disposed adjacent a side of said corner element means so as to define a loop which is substantially perpendicular to said side, the apex of the loop being disposed under said corner element;
said corner element means having a pair of pole ends;
said pole ends spaced apart and arranged substantially normal to each other such that a bubble domain can propagate around the periphery of said corner element means for more than one full cycle of the applied rotating magnetic field.

4,301,518
DIFFERENTIAL SENSING OF SINGLE ENDED MEMORY ARRAY
Jeffrey M. Klaas, Rosenberg, Tex., assignor to Texas Instruments Incorporated, Dallas, Tex.
Filed Nov. 1, 1979, Ser. No. 90,381
Int. Cl.³ G11C *11/40, 7/00*
U.S. Cl. 365—185 **17 Claims**

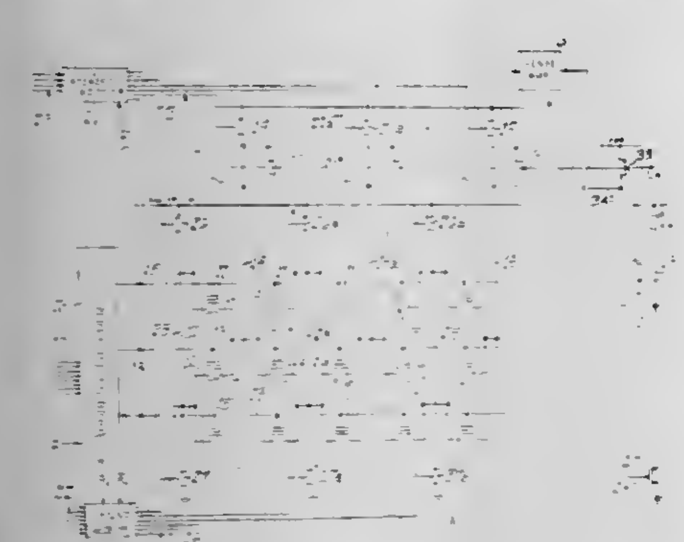

1. A memory device comprising an array of rows and columns of memory cells, means for selectively coupling each column to one input of a differential sense amplifier, means connecting each column to reference potential voltage via a selected one of said memory cells, means separately connecting each column to a supply voltage via a first load device, a reference node connected to the other input of said differential sense amplifier, means connecting said reference node to said supply via a second load device corresponding to one of said first load devices, means connecting said reference node to reference potential via a dummy memory cell constructed the same as memory cells of said array.

4,301,519
SENSING TECHNIQUE FOR MEMORIES WITH SMALL CELLS
Hsing-San Lee, Williston, Vt., assignor to International Business Machines Corporation, Armonk, N.Y.
Filed May 2, 1980, Ser. No. 145,927
Int. Cl.³ G11C *11/40*
U.S. Cl. 365—189 **11 Claims**

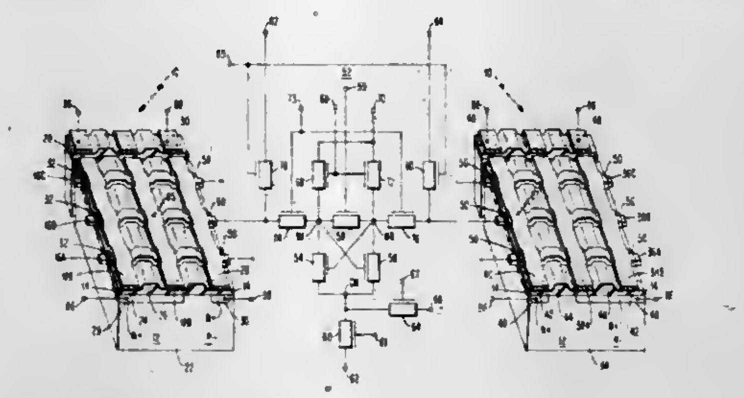

2. A system comprising;
a semiconductor substrate,
an insulating layer disposed on said substrate,
a memory array having a data word line coupled to a first plurality of spaced apart conductive films disposed on said insulating layer defining a plurality of data storage capacitors,
sensing means having first and second terminals,
a dummy word line coupled to a second plurality of spaced apart conductive films disposed on said insulating layer defining a plurality of reference voltage capacitors,
charge source means coupled to said first plurality of conductive films by said data word line and to said second plurality of conductive films by said dummy word line,
means for coupling said first terminal of said sensing means to a conductive film of said first plurality of films spaced a predetermined distance from said charge source means and for coupling said second terminal to a given conductive film of said second plurality of films spaced said predetermined distance from said charge source means, and
means coupled to the first and second terminals of said sensing means for applying a reference voltage to said given conductive film.

4,301,520
DIFFERENTIAL ROW READOUT OF CID IMAGERS
Wayne T. Green, Mexico, N.Y., assignor to General Electric Company, Syracuse, N.Y.
Filed Jul. 7, 1980, Ser. No. 166,408
Int. Cl.³ G11C *13/00;* **H01J** *39/12*
U.S. Cl. 365—189 **2 Claims**

1. A method for reading image intensity information from charge storage sites in a row/column oriented CID array imager, and for differentially cancelling noise common to all rows during production of an output signal representative of the information, said reading being accomplished by determining the magnitudes of signal charges collected at the charge storage sites in response to incident radiation, each site including a row and a column cell, said method comprising:
a. selecting a first and second row of charge storage sites;
b. selecting first and second sites located in an identical column of the respective rows;
c. establishing a READ potential on the row cell of the first site, a ROW COLLECTION potential on the row cell of the second site and a COLUMN COLLECTION potential on the column cells of both sites, said READ potential establishing a charge storage capacity in the first site which is lower than that established in the second site by the ROW COLLECTION potential;
d. applying an INJECTION potential to the column cells of both sites while maintaining the READ and the ROW COLLECTION potentials on the row cells of the first and second sites, respectively, said INJECTION potential reducing the charge storage capacities of both sites, the capacity of the first site being reduced to a magnitude which is insufficient to hold signal charge, thus causing injection of the signal charge contained therein, while the capacity of the second site is reduced to a magnitude which is still sufficient to hold the signal charge contained therein;
e. re-establishing the COLUMN COLLECTION potential on the column cells of both sites;
f. repeating steps b through e for all sites in the selected rows;
g. selecting first and second sites located in an identical column of the respective rows;
h. establishing a READ potential on the row cell of the second site, a ROW COLLECTION potential on the row cell of the first site and a COLUMN COLLECTION potential on the column cells of both sites, said READ potential establishing a charge storage capacity in the

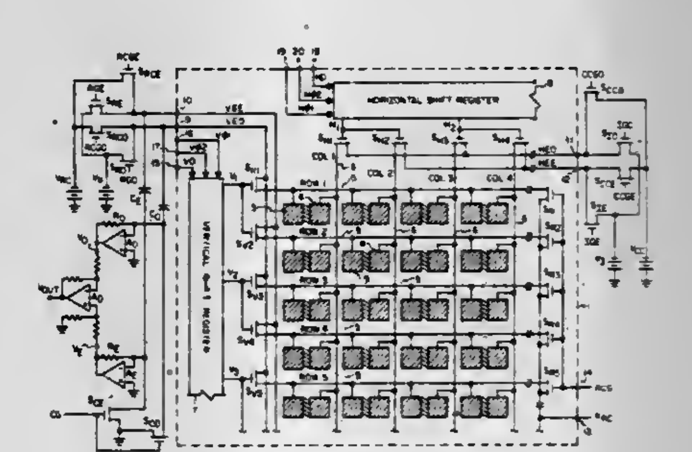

second site which is lower than that established in the first site by the ROW COLLECTION potential;
i. applying an INJECTION potential to the column cells of both sites while maintaining the READ and the ROW COLLECTION potentials on the row cells of the second and the first sites, respectively, said INJECTION potential reducing the charge storage capacities of both sites, the capacity of the second site being reduced to a magnitude which is insufficient to hold signal charge, thus causing injection of the signal charge contained therein, while the capacity of the first site is reduced to a magnitude which is still sufficient to hold the signal charge contained therein;
j. re-establishing the COLUMN COLLECTION potential on the column cells of both sites;
k. repeating steps g through j for all sites in the selected rows;
l. repeating steps a through k until all sites have been read; and
m. producing the output signal by taking the differences between the magnitudes of signals representative of currents flowing from the selected sites during applications of the INJECTION potential, said differences in magnitude representing the signal charges injected by the sites in the row to which the READ potential is being applied.

4,301,521
METHOD AND APPARATUS FOR DATA ACQUISITION AND TRANSPORT
Edward C. Kelm, Pasadena, Calif., assignor to Geophysical Systems Corp., Pasadena, Calif.
Continuation-in-part of Ser. No. 834,817, Sep. 19, 1979, Pat. No. 4,148,006. This application Nov. 30, 1979, Ser. No. 98,817
Int. Cl.³ G01V *1/22*
U.S. Cl. 367—78 **9 Claims**

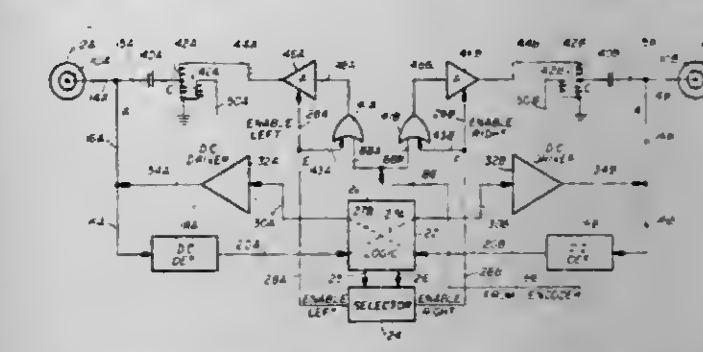

1. In a data acquisition system in which a plurality of array terminals (ATs) are connected in series between successive two conductor digital signal cables, to a central recording station, each of said ATs having two identical cable ports, the plugs at the ends of said digital signal cables, all identical, and adapted to be plugged into either one of said two ports;
the improvement in apparatus for determining which port of an array terminal is the downline port leading to said signal recording station, and which is the upline port leading to the next AT farther from the recording station, comprising;
(a) means in said central recording station to apply a continuous DC voltage of selected magnitude and polarity to the end of the first digital signal cable connected between the central recording station and the first AT, said voltage applied between the two conductors of said channel;
(b) two DC voltage detecting means (VDM) in said first array terminal, one connected to the two digital conductor terminals in each of said two ports;
(c) logic means connected to both of said VDM, to determine which of said VDMs detects a DC voltage, the port connected to that VDM being the downline port, the other port being the upline port;
(d) DC voltage amplifying means to produce a DC voltage of selected magnitude and polarity; and
(e) means, responsive to said logic means, to connect said DC voltage amplifying means to the two digital conductor terminals in said upline port;
whereby said amplified DC voltage will travel through the second digital signal cable from said upline port of said first AT to one of the ports of the next upline AT.

4,301,522
FORMATION OF SONAR CHANNELS BY CHARGE-COUPLED DEVICES
Joël Guyot, and Jean-Louis Vernet, both of Paris, France, assignors to Thomson-CSF, Paris, France
Filed Jul. 20, 1979, Ser. No. 59,327
Claims priority, application France, Jul. 25, 1978, 78 21968
Int. Cl.³ G01S *3/80*
U.S. Cl. 367—123 **7 Claims**

1. A devide for forming channels for an all-round sonar system with an optimised reception pattern comprising:
a plurality M of electroacoustic transducers forming a listening base of said sonar;
means for sampling and multiplexing at a frequency F_e the signals received by said M transducers to produce a multiplexed signal;
a charge-coupled device (CCD) shift register having an input coupled to said sampling means for receiving there-

from said multiplexed signal and having N wherein N<M, series of outputs, each series having R subcontacts, said R subcontacts furnishing R delayed signals corresponding to one of the transducers;

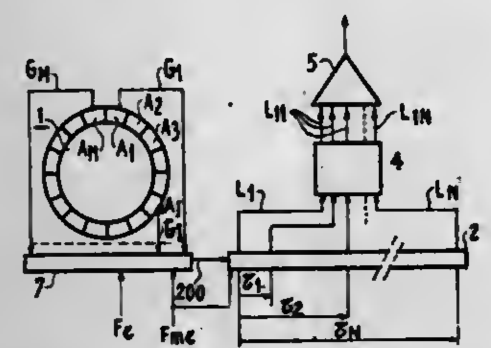

transversal filter means for weighting and adding said R delayed signals at said R subcontacts for each of said N series to form N signals; and

means for filtering and adding said N signals and providing at the output thereof a signal indicative of the formed channel.

4,301,523

MEASUREMENT AND COMPENSATION SYSTEM FOR BEAM FORMING ARRAY

Clifford L. Meland, and Newell O. Booth, both of San Diego, Calif., assignors to The United States of America as represented by the Secretary of the Navy, Washington, D.C.

Filed Jun. 6, 1980, Ser. No. 157,134

Int. Cl.³ G01S *3/82*

U.S. Cl. 367—123 12 Claims

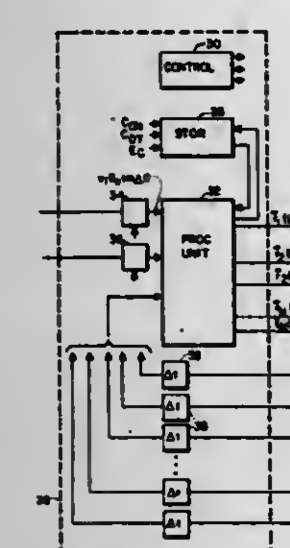

1. Apparatus for determining the bearing of an acoustic source from a selected location in an acoustic environment, said apparatus comprising:

a plurality of discrete acoustic sensor elements;

a flexible strength member, having first and second ends, which may be deployed in a linear configuration in said environment, said sensor elements being attached along said strength member in spaced apart relationship, one of said elements, comprising a lead element, being closer to said first end than any other of said elements;

motion measuring means coupled to said lead element when said member is deployed in said environment for generating signals which indicate the velocity of said lead sensor element in said environment;

processing means for generating estimates of positions of respective sensor elements when said strength member is deployed in said environment in said location, physically measured data required for said estimates being limited to said velocity indicating signals; and

means coupled to said processing means for steering an acoustic detection beam in response to said position estimates to determine the bearing of said source, said acoustic detection beam comprising the combined detection capabilities of said sensor elements.

4,301,524

PROGRAMMABLE ALARM CLOCK

Ronald L. Koepp, Sunnyvale; Floyd F. Oliver, Los Altos, and James V. Barnett, Cupertino, all of Calif., assignors to Fairchild Camera and Instrument Corp., Mountain View, Calif.

Continuation of Ser. No. 866,874, Jan. 4, 1978, abandoned. This application Mar. 12, 1980, Ser. No. 129,520

Int. Cl.³ G04B *23/00;* G04C *21/16*

U.S. Cl. 368—261 7 Claims

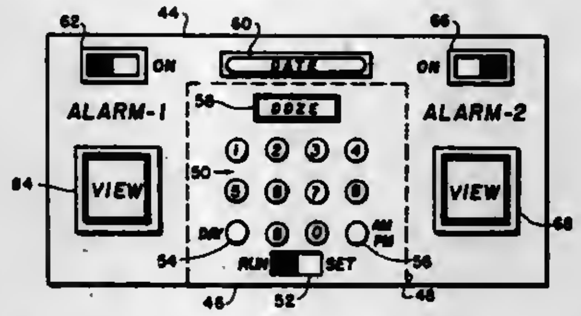

1. A programmable clock having: a microcomputer system for storing and processing time-related data and for controlling the display of time-related data; input keyboard means operable in a SET mode for entering time-related data into the microcomputer system, said keyboard means including a plurality of numeric input keys; switching means coupled to the microcomputer system for switching said clock between the SET mode and an operational RUN mode; output display means controlled by the microcomputer system for displaying time-related data thereon; and alarm means controlled by the microcomputer system for generating alarm signals; characterized in that said alarm means include M independently operable alarm circuits, where M is a positive integer greater than one, each alarm circuit operable on a repetitive seven-day basis for generating during a seven-day period according to an alarm-signal sequence an alarm signal at a selected alarm time on each day of N consecutive days of the seven-day period, where N is an integer varying from two through six, the alarm-signal sequence automatically repeatable during each following seven-day period.

4,301,525

CENTRAL CONTROL SYSTEM FOR DICTATION

Said Mohammadioun; David A. Wittler; Theodore Titus, IV, and Luther C. Plunkett, Jr., all of Atlanta, Ga., assignors to Lanier Business Products, Inc., Atlanta, Ga.

Continuation of Ser. No. 917,745, Jun. 22, 1978, abandoned, which is a division of Ser. No. 782,947, Mar. 30, 1977, abandoned. This application Feb. 25, 1980, Ser. No. 124,213

Int. Cl.³ G11B *27/36*

U.S. Cl. 369—29 2 Claims

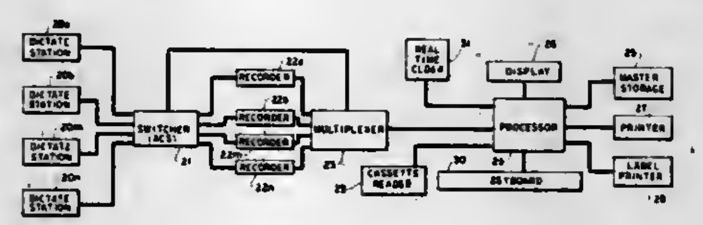

1. A central control system to aid in the supervision and coordination of a plurality of projects which become available to be completed at different times, which originate from a plurality of project originators, and which are to be assigned for completion to a plurality of project terminators, comprising:

an input means selectively operable to provide a plurality of input signals including a plurality of first input signals representative of said plurality of project originators, a plurality of second input signals representative of said plurality of project terminators, a status signal selectively representative of a particular status for some of said plurality of projects, and a plurality of input serial numbers;

clocking means for providing upon each occurrence of one of said plurality of first input signals a first time signal corresponding to the time of said occurrence of said one of said plurality of first input signals and for providing upon each occurrence of one of said plurality of second input signals a second time signal corresponding to the time of said occurrence of said one of said plurality of second input signals;

counting means for providing one of a plurality of assigned serial numbers sequentially upon each occurrence of said one of said plurality of first input signals;

addressing means for providing a plurality of normal addresses each being one of said plurality of assigned serial numbers plus P, P being an integer constant greater than zero;

addressable storage means for storing said one of said plurality of first input signals and the corresponding one of said plurality of said first time signals at one of said plurality of normal addresses upon said each occurrence of said one of said plurality of first input signals, said one of said plurality of normal addresses being P plus the particular one of said plurality assigned serial numbers provided by said counting means upon said occurrence of said one of said plurality of first input signals;

a priority means for sequential provision of one of a plurality of priority addresses, each of said priority addresses being an integer less than P, one of said plurality of priority addresses being provided upon each occurrence of one of said plurality of input serial numbers followed by said status signal from said input means;

relocation means responsive to each occurrence of said provision of one of said plurality of priority addresses from said priority means to store at said priority address of said addressable storage means said first input signal which preceded said status signal and said first time signal stored at the particular one of said normal addresses corresponding to said one of said plurality of input serial numbers; and

display means for displaying the contents of said addressable storage means sequentially in order of address.

4,301,526

TONEARM CONTROL SYSTEM BASED ON ABSOLUTE TONEARM POSITION

Takashi Morii, and Junichi Kurata, both of Tokorozawa, Japan, assignors to Pioneer Electronic Corporation, Tokyo, Japan

Filed Feb. 26, 1979, Ser. No. 14,787

Claims priority, application Japan, Feb. 24, 1978, 53-20635

Int. Cl.³ G11B *17/22*

U.S. Cl. 369—33 12 Claims

1. A tonearm drive control device for use in playing a record disc having bands of recorded music separated by non-recorded portions comprising:

a reversible electric motor;

a vertical tonearm drive means for vertically moving a tonearm;

horizontal tonearm drive means responsive to the rotation of said motor to horizontally move said tonearm;

first detecting means for detecting the position of said tonearm in a horizontal direction with respect to a predetermined reference position and generating a first output in response thereto;

second detecting means for detecting non-recorded portions of a record disk and generating a second output in response thereto, said second detecting means being mounted on a supporting member moveable with said tonearm and offset from said tonearm in a horizontal direction and aligned with a stylus carried by said tonearm;

adding means for generating a distance signal representative of the distance in horizontal direction between said second detecting means and said stylus and for adding said distance signal to said first output and generating a third output representative of a position of a band of recorded music in response thereto;

first memory means receiving said third output from said adding means and operating to store said third output at assigned positions therein in response to an occurrence of said second output, said first memory, in response to an address signal, providing as a memory output the contents of an addressed first memory location;

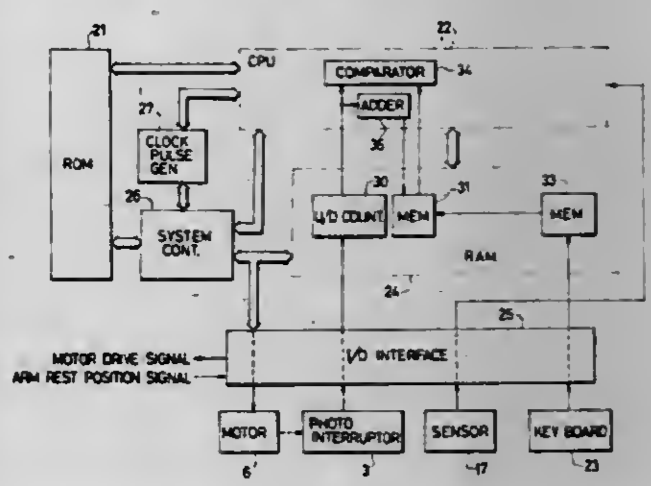

selecting means for selecting desired music to be reproduced and generating a selection signal representative of an order of the selected music;

second memory means receiving said selection signal from said selecting means and generating said address signal in response thereto, said address signal corresponding to the band number of recorded music to be played; and

comparator means for comparing said first output with said memory output;

wherein said reversible electric motor and both said tonearm drive means are controlled by the outputs of said comparator means.

4,301,527

OPTICAL HEAD FOR A VIDEODISC RECORDER/PLAYER

Yoshito Tsunoda, Mitaka; Toshimitsu Miyauchi, Hachioji; Kazuo Shigematsu, Kawasaka, and Kimio Tatsuno, Kokubunji, all of Japan, assignors to Hitachi, Ltd., Tokyo, Japan

Filed Jun. 11, 1979, Ser. No. 47,078

Claims priority, application Japan, Jan. 9, 1978, 53/68792

Int. Cl.³ G11B *7/12*

U.S. Cl. 369—45 9 Claims

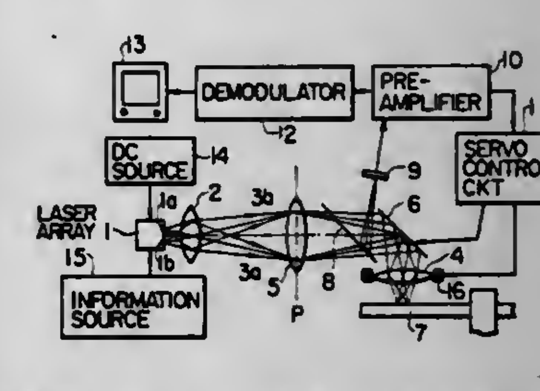

1. An information processing optical head comprising a semiconductor laser light source and an optical system for focusing beams from said light source on a recording medium on which predetermined information is recorded using the light from the semiconductor laser light source, wherein said

semiconductor laser light source has a plurality of lasing points and said optical system includes a first lens for forming spot images of the lasing points of the semiconductor laser, a second lens disposed on a plane where said spot images of the lasing points are formed, and a third lens for focusing the beams passing through the second lens on said recording medium, wherein the focal distance of the second lens is set by the relation:

$$1/f = 1/l_1 + 1/l_2$$

where

l_1 is the distance between the first and second lens, and
l_2 is the distance between the second and third lens, so that said second lens prevents truncation by the third lens of the beams from the plurality of lasing points.

4,301,528
TONE ARM MECHANISM
Dennis A. Leri, Sharon, Mass., assignor to Teledyne Industries, Inc., Los Angeles, Calif.
Filed May 29, 1979, Ser. No. 43,352
Int. Cl.³ G11B *3/10*
U.S. Cl. 369—221 4 Claims

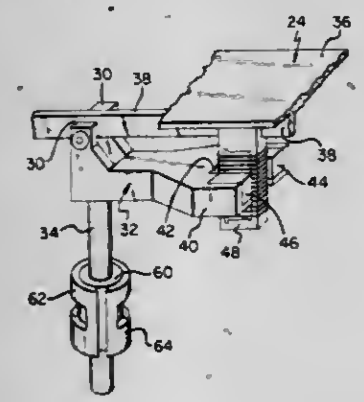

1. In a phonograph record playing system having a support member providing horizontal pivotal supports, a movable tone arm mounted for rotation in a vertical plane about said pivotal supports, a vertical post mounted for rotation about its long axis, said support member being coupled to said shaft for rotation therewith, said tone arm bearing adjacent one end thereof a cartridge containing a stylus for contacting and playing a substantially planar recording disc, and sensor means for producing signals derived from the low frequency tracking behavior of said tone arm, the improvement comprising
first motor means for moving said tone arm in substantially only a direction perpendicular to the plane of said disc, said first motor means being electrically coupled to be energized by selected portions of said signals, said first motor means comprising a yoke connected to and extending from said support member so as to define a slot extending parallel to said tone arm, a first coil mounted adjacent the opposite end of said tone arm and extending into said slot, said first coil being movable with said tone arm, said first coil being coupled to be energized by said selected portions of said signals, and means mounted on said yoke for providing a magnetic field disposed to interact with the field produced in said first coil by said selected portions of said signals, and
second motor means coupled to said shaft for moving said shaft and tone arm together in substantially only a direction parallel to the plane of said disc, said second motor means being electrically coupled to provide tone arm movement responsively to other selected portions of said signals.

4,301,529
DRIVE CONTROL MECHANISM FOR A PHONOGRAPH
Ronald D. Irvin, Poway, Calif., assignor to The Quaker Oats Company, Chicago, Ill.
Filed Jan. 18, 1980, Ser. No. 113,230
Int. Cl.³ G11B *15/44*
U.S. Cl. 369—267 3 Claims

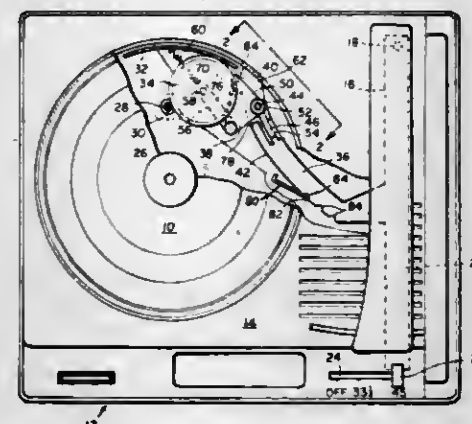

1. An improved drive control mechanism for a turntable of a phonograph having an off position, a 33⅓ rpm drive position, and a 45 rpm drive position comprising:
a drive motor;
a drive shaft driven by said drive motor and having first and second vertically spaced drive portions of different diameters;
a rotatable puck interposed between said drive portions and said turntable for selectively drivingly connecting and disconnecting said drive portions to said turntable;
a fixed platform;
a control lever slidably movable on said platform and having a first cam surface on one side thereof, a second cam surface on the upper surface thereof, and an elongated slot extending through said lever and said second cam surface, said control lever having a handle for moving said control lever between said off, 33⅓ rpm and 45 rpm positions;
an upwardly extending post secured to said platform and extending through said slot, said post having a shoulder;
a plate having first, second and third spaced apart portions with said first portion thereof pivotally mounted on said post, said first portion further being interposed between said upper surface and said shoulder;
an arm having one end rotatably supporting said puck, and its opposite end pivotally connected to said second portion of said plate;
a cam follower pin depending from said third portion of said plate for engagement with said first cam surface for moving said puck into and out of engagement with said first and second drive portions upon movement of said control lever between said off, 33⅓ rpm and 45 rpm positions;
a cam follower surface on said first plate portion slidably engaging said upper surface of said lever and said second cam surface for raising and lowering said plate and said puck into and out of vertical alignment with said first and second drive portions in timed relation with said in and out movement of said puck upon movement of said lever between said 33⅓ rpm and 45 rpm positions;
a first spring interposed between said post shoulder and said first plate portion for urging said cam follower surface into engagement with said upper surface of said lever; and
a second spring for biasing said puck toward said drive portions and said turntable for drivingly connecting said drive portions to said turntable, and for urging said cam follower pin into engagement with said first cam surface.

4,301,530
ORTHOGONAL SPREAD SPECTRUM TIME DIVISION MULTIPLE ACCESSING MOBILE SUBSCRIBER ACCESS SYSTEM
Frank S. Gutleber, Little Silver, N.J., assignor to The United States of America as represented by the Secretary of the Army, Washington, D.C.
Filed Dec. 18, 1978, Ser. No. 970,018
Int. Cl.³ H04J *13/00*
U.S. Cl. 370—18 3 Claims

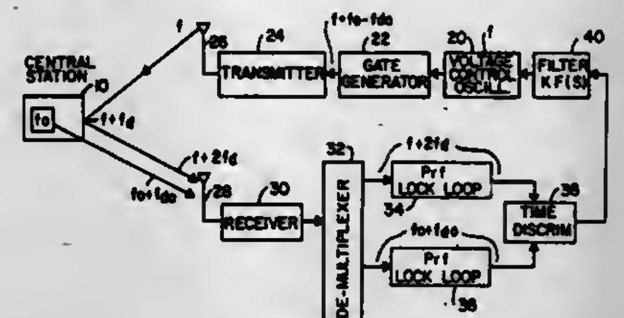

1. A mobile subscriber system comprising:
a plurality of subscriber stations each of which is assigned a respective distinct time interval within a channel frame period for transmission and reception;
a separate transmitter means at all of said subscriber stations for transmitting communication carrier signals omnidirectionally at a first frequency common to all said transmitter means, said transmitter means including a code multiplexer applying the same multiplexed code signals to said transmitter within the respective assigned time interval; a central node station including carrier frequency translation means for retransmitting said code signals at a second carrier frequency relative to a reference frequency without change of relative timing; receiver means at each of said subscriber stations for receiving code signals transmitted by said control node at said second carrier frequency which is common to all of said receiver means; each of said receiver means including means for detecting said retransmitted code signals to produce an output signal occuring only during the respective time interval within the corresponding channel frame period, and means at each subscriber station for synchronizing timing of that station's code signals retransmitted from said central node station with said reference frequency, by controlling that station's transmitter frequency.

4,301,531
THREE-PARTY CONFERENCE CIRCUIT FOR DIGITAL TIME-DIVISION-MULTIPLEX COMMUNICATION SYSTEMS
Barry D. Lubin, Schaumburg, Ill., assignor to Motorola, Inc., Schaumburg, Ill.
Filed Jul. 2, 1979, Ser. No. 54,391
Int. Cl.³ H04M *3/56*
U.S. Cl. 370—62 14 Claims

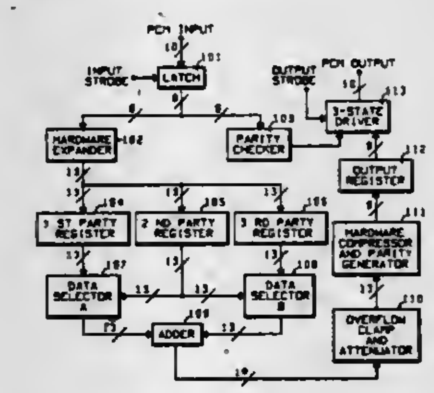

1. A conference circuit for combining digitized speech signals received from groups of three parties in corresponding channels of an incoming time-division-multiplex (TDM) highway, having a predetermined number of channels, to provide combined speech signals for transmission to the parties in corresponding channels of an outgoing TDM highway, having a predetermined number of channels, said conference circuit comprising:
first, second and third register means repetitively coupled one after another to the incoming TDM highway for storing the speech signals from every third channel;
multiplexing means coupled to the first, second and third register means for selecting different pairs of the register means, said multiplexing means selecting the second and third register means when speech signals are being stored in the first register means, selecting the first and second register means when speech signals are being stored in the third register means, and selecting the first and third register means when speech signals are being stored in the second register means;
means for combining the speech signals from each selected pair of register means; and
means for applying the combined speech signals to the outgoing TDM highway.

4,301,532
ARRANGEMENT FOR TRANSMITTING DIGITAL DATA SIGNALS
Dittmar Janetzky, Karlsruhe, Fed. Rep. of Germany, assignor to Siemens Aktiengesellschaft, Munich, Fed. Rep. of Germany
Filed Aug. 21, 1979, Ser. No. 68,427
Claims priority, application Fed. Rep. of Germany, Aug. 25, 1978, 2837214
Int. Cl.³ H04J *3/06, 3/08*
U.S. Cl. 370—85 10 Claims

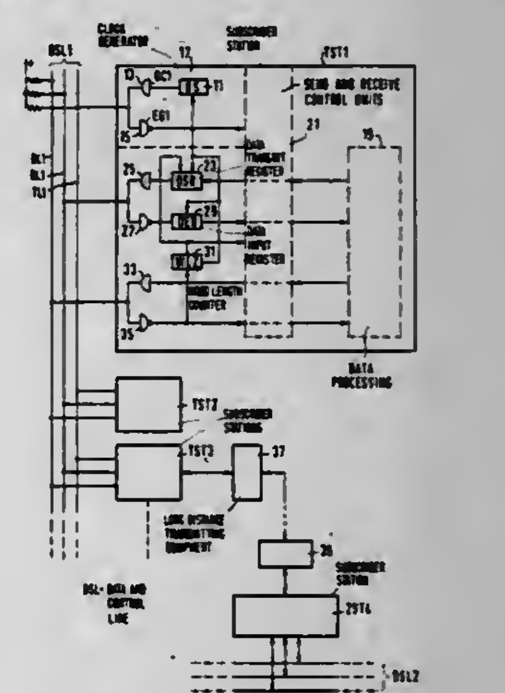

1. In an arrangement for transmitting data signals between subscriber stations which are connected to common data and control lines, in which at least the signals of the control lines are formed by logically combining the output signals of the subscriber stations and in which the data sending station switches the data signals, during a given phase of a control signal on a control line, to the data line and the data receiving station transmit an indication of the receipt of the data and a control signals indicating readiness for receiving new data to the sending station, whereupon the sending station is adapted to remove the data signals then present on the data line and provide new data, the improvement comprising:
a clock generator in each subscriber station;
a common clock line;
means synchronizing all of said clock generators by means of said common clock line such as to hold all clock genera-

tors in a given clock phase until all clock generators are enabled for the next clock phase; and

means to cause the data sending stations to switch data signals to the data line during a given clock phase; and

means in the stations receiving the data signals adapted to enable the clock generators contained therein for the next phase only when the data signals have been transferred.

4,301,533

TECHNIQUE FOR INCREASING THE RAIN MARGIN OF A TDMA SATELLITE COMMUNICATION SYSTEM

Anthony Acampora, Freehold, and Douglas O. Reudink, Sea Girt, both of N.J., assignors to Bell Telephone Laboratories, Incorporated, Murray Hill, N.J.

Filed Nov. 27, 1979, Ser. No. 97,870

Int. Cl.³ H04B *7/185*

U.S. Cl. 370—104 **6 Claims**

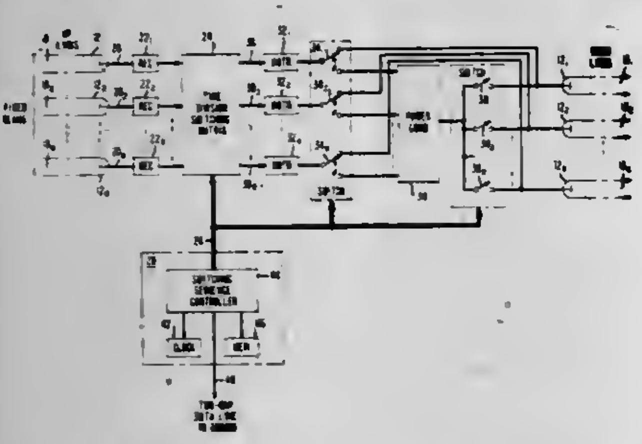

1. A satellite arrangement for use in a TDMA multiple beam satellite communication system wherein multiple ground stations (16) normally operate to communicate with one another via the satellite using separate time slot burst intervals during a predetermined frame fromat, the satellite arrangement comprising:

a plurality of up-link antenna ports (12_1–12_n, FIG. 3; 50_1–50_E, FIG. 4) capable of receiving up to n concurrent time slot bursts during each burst interval of the frame format from separate spaced-apart ones of the ground stations;

a plurality of down-link antenna ports (12_1–12_n, FIG. 3; 64_1–64_E, FIG. 4) capable of launching each of the concurrently received time slot bursts towards the appropriate destination ground station;

means (24, 34, 38, FIG. 3; 52_1–52_n and 60_1–60_n, FIG. 4) capable of directing each of the received time slot bursts between the appropriate up-link and down-link antenna ports;

a plurality of amplifying means (32_1–32_n, FIG. 3; 58_1–58_n, FIG. 4) coupled to the directing means, each amplifying means being disposed to amplify the received time slot bursts directed thereto by the directing means prior to delivery to the appropriate down-link antenna port; and

a controller (28, FIG. 3; 54, FIG. 4) capable of generating control signals to the directing means for causing the directing means to appropriately switch the received time slot bursts during each burst interval of the frame format between the appropriate up-link and down-link antenna ports via the plurality of amplifying means

characterized in that

the controller comprises means capable of generating both (a) first control signals to the directing means during certain predetermined time slot intervals of the frame format to cause the directing means to switch each of a plurality of n time slot bursts concurrently received at the up-link antenna ports through a separate one of the plurality of amplifying means for launching by the down-link antenna ports in a separate one of a plurality of n down-link beams to a separate destination ground station, and (b) second control signals to the directing means during the remaining predetermined time slot burst intervals of the frame format to cause the directing means to switch each of r concurrently received up-link time slot bursts, where $n>r>1$, between the up-link and down-link antenna ports through a separate predetermined number of amplifying means taken from the plurality of amplifying means before each of the r time slot bursts is directed to a separate one of r destination ground stations with the combined power of said separate predetermined number of amplifying means.

4,301,534

FRAMING CIRCUIT FOR TIME MULTIPLEXED DATA

Roland E. Genter, Falls Church, Va., assignor to Digital Switch Corporation, McLean, Va.

Filed Apr. 9, 1979, Ser. No. 28,361

Int. Cl.³ H04J *3/06*

U.S. Cl. 370—105 **9 Claims**

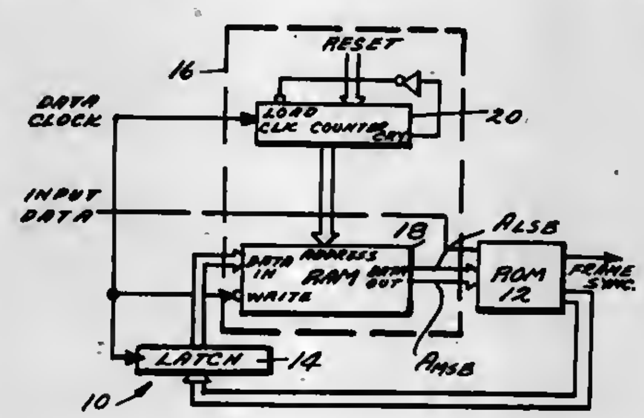

6. A framing circuit for operation upon a time division multiplexed input signal comprising a plurality of digital signals serially combined in a periodic fashion, whereby the data bits of said digital signals occur during respective periodic time slots, said multiplexed signal further including a sync bit in one of said time slots, said sync bit value following a predetermined sync pattern, said framing circuit comprising:

a first memory having a plurality of locations, respective blocks of locations corresponding to respective correlation states each having an associated address, each of said first memory locations including indicia of the block of first memory locations corresponding to the next correlation state in said sequence, and further including indicia of whether the associated correlation state is such as would indicate detection of the sync pattern;

a second memory including a number of locations at least equal to the number of time slots in a period of said multiplexed input signal, each of said second memory locations being associated with a respective particular time slot;

means for cyclically addressing said second memory locations in synchronism with said associated time slot;

means, responsive to signals indicative of the addressed second memory location and said multiplexed input signal for addressing a particular first memory location within the block of locations corresponding to the correlation state of the time slot associated with said second memory means locations and means for applying said indicia of the block of first memory locations corresponding to the next sequential correlation state contained in said particular addressed first memory location to said second memory and storing said indicia in said addressed second memory location.

4,301,535

PROGRAMMABLE READ ONLY MEMORY INTEGRATED CIRCUIT WITH BIT-CHECK AND DEPROGRAMMING MODES AND METHODS FOR PROGRAMMING AND TESTING SAID CIRCUIT

Vernon G. McKenny, Carrollton, and John K. Hampton, Lewisville, both of Tex., assignors to Mostek Corporation, Carrollton, Tex.

Filed Jul. 2, 1979, Ser. No. 53,880

Int. Cl.³ G01R *31/28*

U.S. Cl. 371—21 **10 Claims**

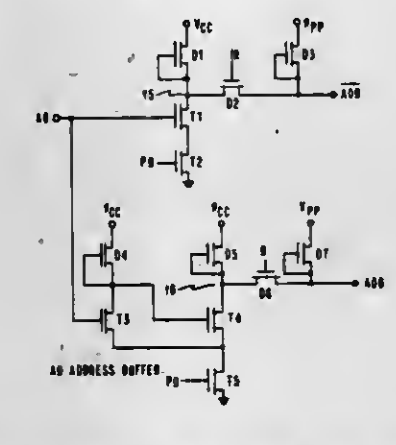

1. In a programmable digital read only memory integrated circuit having a programmable memory matrix containing a plurality of programmable transistors, the improvement comprising circuit means for coupling a variable voltage to the gate of each programmable transistor and means for detecting if the threshold voltage of each programmable transistor within the programmable memory matrix has been reached.

4,301,536

MULTITONE FREQUENCY RESPONSE AND ENVELOPE DELAY DISTORTION TESTS

David L. Favin; Peter F. Lynn, both of Little Silver, and Paul J. Snyder, Linden, both of N.J., assignors to Bell Telephone Laboratories, Incorporated, Murray Hill, N.J.

Filed Dec. 28, 1979, Ser. No. 107,787

Int. Cl.³ H04B *3/46*

U.S. Cl. 371—22 **32 Claims**

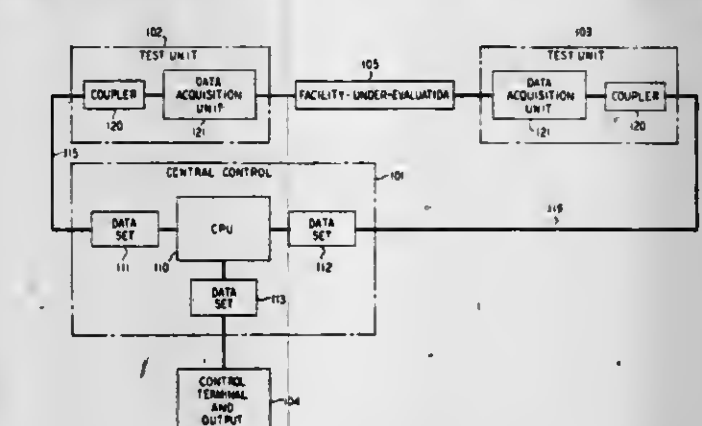

1. Apparatus (FIG. 1) for obtaining a measure of at least one prescribed transmission characteristic of a network or facility (105) of the type including the generation and transmission of a test signal having a plurality of tones over the network or facility and utilizing characteristics of a received version of the transmitted test signal to generate the measure of the at least one prescribed transmission characteristic, wherein the improvement comprises,

means for generating the test signal having the plurality of tones, each tone having a predetermined frequency and a different phase component value determined in accordance with prescribed criteria.

4,301,537

MEANS AND METHOD FOR MAINTAINING SYNCHRONIZATION OF A SPREAD SPECTRUM OR OTHER RECEIVER CLOCK

John C. Roos, Thousand Oaks, Calif., assignor to Bunker Ramo Corporation, Oak Brook, Ill.

Filed Nov. 6, 1979, Ser. No. 91,804

Int. Cl.³ H04L *7/00*

U.S. Cl. 375—1 **18 Claims**

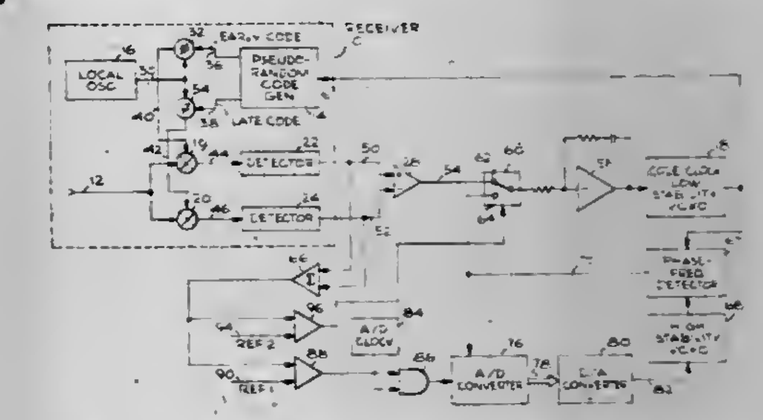

1. A system for locally generating a clock signal in synchronization with a received input signal and for maintaining such synchronization during a temporary loss of said input signal, said system comprising:

first oscillator means responsive to said input signal for supplying a clock signal to be synchronized with said input signal;

second oscillator means having a greater free running frequency stability than that of said first oscillator means;

means for determining whether or not said clock signal is synchronized with said input signal;

means responsive to said clock signal and input signal being synchronized for causing said second oscillator means to supply an output signal synchronized with said clock signal; and

means responsive to said clock signal and input signal not being synchronized for causing said first oscillator means to supply said clock signal in synchronization with said second oscillator means output signal.

4,301,538

REMOTE SURVEILLANCE AND FAULT LOCATION UNIT FOR PULSE REGENERATOR REPEATERS

Patrice Desombre, L'Etang La Ville, and Jean-Pierre Steun, Lannion, both of France, assignors to Compagnie Industrielle des Telecommunications Cit-Alcatel, Paris, France

Filed Oct. 29, 1979, Ser. No. 88,918

Claims priority, application France, Nov. 2, 1978, 78 31028

Int. Cl.³ H04B *17/02*

U.S. Cl. 375—4 **3 Claims**

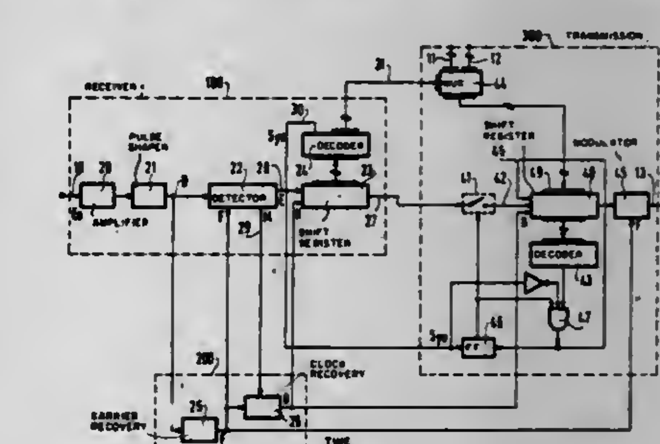

1. A remote surveillance and fault location unit for implementing the method of remote surveillance and fault location

of pulse regenerator repeaters in a digital transmission link using a service signal added to the digital data signal conveyed by the link, the service signal being relayed at each pulse regenerator repeater and being constituted by a low frequency carrier modulated by a very low frequency binary signal in the form of a repetitive frame comprising a synchronizing-word followed by time slots in which there are written in order, on each occasion that the service signal is relayed, data relative to the error rates of the pulse regenerator repeaters, the said unit being connected, in the link, in parallel with a pulse regenerator repeater which is provided with an error rate measuring circuit and service signal separator units arranged on either side of the pulse regenerator repeater in question for one transmission direction the said remote surveillance and fault location unit comprising:

a receiver circuit having its input connected via one of the separator units to a first input to the pulse regenerator repeater for receiving a service signal should one be present at this input, the said receiver circuit comprising a pulse-shaping circuit followed by an envelope detector circuit for detecting the frame by demodulating the received service signal, and a first shift register having a serial input and both serial and parallel outputs to make it possible to access a plurality of digits in the frame in parallel, and a synchronizing word decoder connected to the parallel output of the first shift register,

a time base comprising a carrier frequency recovery circuit constituted by an oscillator synchronized by the output signal from the pulse-shaping circuit, and a clock bit recovery circuit for recovering the bit frequency of the received frame, and being used to control shifting of the first shift register, and

a transmission circuit having its output connected via a second separator unit to a second input to the pulse regenerator repeater for transmitting a service signal corresponding to the received frame to which data from the error rate measuring circuit has been added, the said transmission circuit comprising a second shift register having both serial and parallel inputs and serial and parallel outputs, and connected by its serial input to the serial output of the first shift register via a logic gate, having its parallel input connected to the outputs of the error rate measuring circuit, having its parallel output connected to the outputs connected to the input of a free-time-slot decoder and having its serial output connected to a modulator, the said logic gate being opened by the synchronizing word decoder on detecting sychronizing word and closed by the free-time-slot decoder on detection of a free channel, the said free-time-slot decoder also controlling an enable-input to enable parallel loading of the second shift register on detection of a free channel, and the said modulator receiving the signal to be modulated from the carrier frequency recovery circuit and the modulation signal from the serial output of the second shift register.

4,301,539
SUPERVISING SYSTEM FOR USE IN RADIO TRANSMISSION

Kouzou Kage, Tokyo, Japan, assignor to Nippon Electric Co., Ltd., Tokyo, Japan

Filed Mar. 10, 1980, Ser. No. 128,787

Claims priority, application Japan, Mar. 8, 1979, 54/27053

Int. Cl.³ H04Q 7/00; H04B 7/26

U.S. Cl. 375—107 9 Claims

1. A phase shift monitoring system for a mobile communication system having a central station, one or more base stations coupled with said central station through a wired communication link, and a plurality of mobile radio stations linked with said base stations through radio communication links; said base stations, responsive to a command signal supplied from said central station, transmitting from time to time a specific signal common to said mobile radio stations through carrier waves of a common frequency, together with ordinary information signals for communication between said mobile radio stations and said central station, said specific signal having a predetermined repetition rate, characterized in that each of said base stations comprises: means for detecting said specific signal; means for providing a time reference pulse in timed relationship with said information signals; means responsive to said time reference pulse and said specific signal for determining whether the fluctuation in the timing of said specific signal is within a preset tolerable limit; means responsive to said determining means for generating an alarm signal when said preset tolerable limit is exceeded; and means for transmitting said alarm signal to said central station, and means for readjusting the transmission timing of said command signal to compensate for said fluctuation; whereby the specific signals are rendered in phase when transmitted at said base stations through said radio communication so that the interference caused at said mobile radio stations may be minimized.

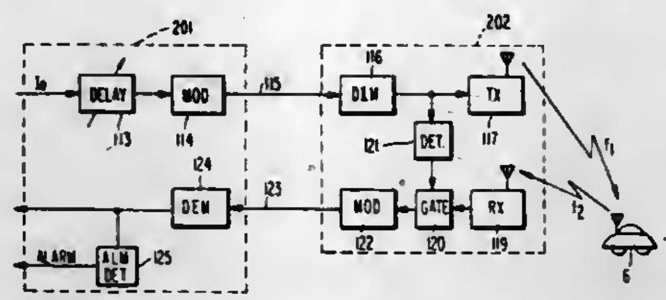

4,301,540
ELECTRONIC TUNING TYPE RECEIVER WITH DIGITAL TO ANALOG CONVERTER

Reisuke Sato, Kawagoe, and Tadashi Ogawa, Tokorozawa, both of Japan, assignors to Pioneer Electronic Corporation, Tokyo, Japan

Filed Aug. 30, 1978, Ser. No. 938,143

Claims priority, application Japan, Aug. 30, 1977, 52-103983; Aug. 30, 1977, 52-103984

Int. Cl.³ H04B 1/16

U.S. Cl. 455—180 26 Claims

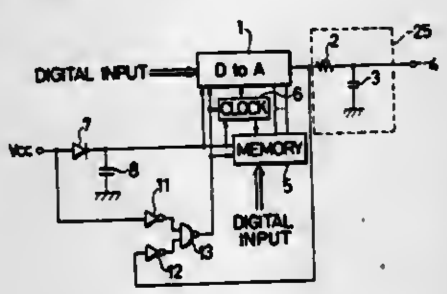

1. In a system having a source of electric power, a memory for storing a digital input value and a digital-to-analog converter section for generating an output signal corresponding to an output of the memory, the improvement comprising, means responsive to a low level signal output from both said digital-to-analog converter and said source of electric power to generate a disable signal to said digital to analog converter.

4,301,541
NOISE ELIMINATING CIRCUIT

Koichi Tanaka, Tokyo, and Kiyoshi Amazawa, Ohmiya, both of Japan, assignors to Nippon Electric Co., Ltd. and Clarion Co., Ltd., both of Tokyo, Japan

Filed Jul. 17, 1979, Ser. No. 58,167

Claims priority, application Japan, Jul. 17, 1978, 53-87346

Int. Cl.³ H04B 1/10

U.S. Cl. 455—221 4 Claims

4. A noise eliminating circuit for a radio receiver having noise eliminating gate means comprising:

demodulating means for demodulating an input signal containing an information component and pulsive noise components to provide an audio output signal containing an information signal and pulsive noise signals;

noise detecting means for detecting said pulsive noise signals in said audio output signal, said noise detecting means comprising an amplifier for amplifying said audio output signal of said demodulating means and band pass filter means for extracting said pulsive noise signal from the output of said amplifier to provide a first noise output signal, said amplifier having the characteristic that it becomes saturated when said pulsive noise signals are of large amplitude, said noise detecting means also comprising a level detector for detecting the level of said pulsive noise signal of said audio output signal from said demodulating means and providing a continuous second noise output signal for as long as the level of said pulsive noise signal of said audio output signal from said demodulating means exceeds the level at which said amplifier is saturated so as to detect said pulsive noise signals of large amplitude and/or long duration; and

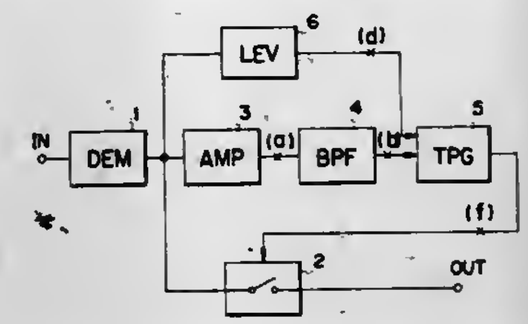

trigger pulse generator means for producing a gate control signal to said noise eliminating gate means in response to said first and second noise output signals so that said noise eliminating gate means is turned off for the durations of pulsive noise signals in said audio output signal.

4,301,542
REMOTE CONTROL OF APPLIANCES

Morton Weintraub, 1542 47th St.; Elliot Waxman, 1825 50th St., and Bernard Gendelman, 1340 52nd St., all of Brooklyn, N.Y. 11219

Continuation-in-part of Ser. No. 911,168, May 31, 1978, abandoned, which is a continuation-in-part of Ser. No. 707,855, Jul. 22, 1976, abandoned. This application Apr. 5, 1979, Ser. No. 27,275

Int. Cl.³ H04B 1/16

U.S. Cl. 455—353 12 Claims

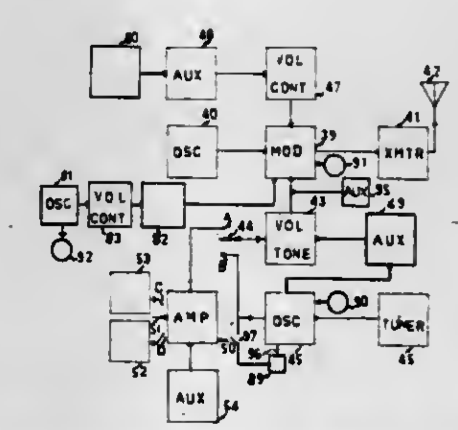

1. A remote control system comprising one or more control apparatus for manually and automatically selecting at least one function and controlling or varying said function of one or more AC and DC electrical apparatus and non electrical apparatus whereby said non electrical apparatus is controlled or varied via said electrical sensing means, said AC and DC apparatus and said electrical sensing means connected to a receiver, comprising,

(a) a transmitter, including means for generating a carrier wave,

(b) means for modulating said carrier wave with one or more subcarrier waves each conveying information relative to a specific function to be controlled or varied, and whereby enabling said function to be controlled from a plurality of inputs from remote areas,

(c) means for controlling or varying said function by audio signal, light signal, and by the signal of electromagnetic signal pick up means,

(d) auxiliary input jack means for the addition or mixing of auxiliary signals for controlling or varying said function, said auxiliary signals including baseband signals, recorded signals of an operating apparatus identical to that of said AC and DC apparatus and said electrical sensing means,

(e) auxiliary output jack means for connecting a recorder for recording the signal generated by said identical apparatus and said electrical sensing means, said recorded signal used for controlling or varying said function,

(f) means for receiving, tuning and demodulating said modulated transmitted signal to a resulting amplitude or phase or frequency or pulse or any combination baseband signal and for amplifying the said resulting signal whereby to drive said AC and DC apparatus and non electric apparatus to a desired level of operation; for automatic discontinuance of said operation when said transmitter is not in opertion; for selecting said function as a result of voltage changes, pulse changes, frequency changes, phase changes in the said baseband signal,

(g) said remote selection, control or varying of said function achieved without direct connection of either said AC and DC apparatus or said sensing means to said control apparatus.

4,301,543
FIBER OPTIC TRANSCEIVER AND FULL DUPLEX POINT-TO-POINT DATA LINK

John P. Palmer, Pomona, Calif., assignor to General Dynamics Corporation, Pomona Division, Pomona, Calif.

Filed Feb. 20, 1980, Ser. No. 123,036

Int. Cl.³ G02B 5/14

U.S. Cl. 455—612 16 Claims

1. A duplex fiber optic data transceiver comprising:

means for transmitting data to an input optical fiber;

means for receiving data from an output optical fiber;

a coupler; and

a bidirectional optical fiber;

said coupler comprising the termination of the input optical fiber at its junction with a fiber comprising the output optical fiber and the bidirectional optical fiber, the termination of the input optical fiber being a substantially planar elliptical surface at an angle inclined to the axis of the fiber and extending completely through the core of the fiber, the diameter of the output/bidirectional fiber being greater than the input fiber, and the junction with the output/bidirectional fiber being an elliptical planar surface formed on the outside of an arc of said fiber.

DESIGN PATENTS

GRANTED NOV. 17, 1981

ERRATA

For CLASS	See PATENT NO.
D32-018	261,851
D09-346	261,944

DESIGNS

NOVEMBER 17, 1981

261,820
COMBINED HOT DOG AND BUN
Minoru Yamanaka, Ichikawa, Japan, assignor to Takeshi Yagi, Tokyo, Japan
Filed Apr. 19, 1979, Ser. No. 31,596
Term of patent 14 years
Int. Cl. D01—*01*
U.S. Cl. D1—3

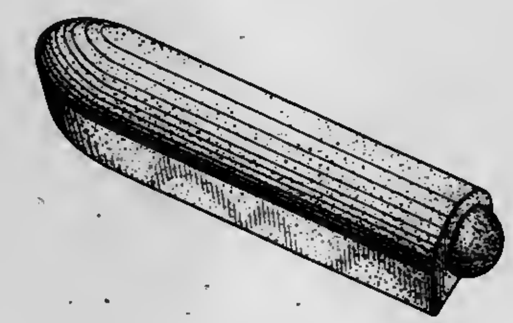

261,821
HEEL OR ELBOW PROTECTOR
Vance M. Hubbard, Euless, and Welton K. Brunson, Bedford, both of Tex., assignors to Tecnol, Inc., Fort Worth, Tex.
Filed Jan. 2, 1980, Ser. No. 97,173
Term of patent 14 years
Int. Cl. D2—*99, 02, 04*
U.S. Cl. D2—27

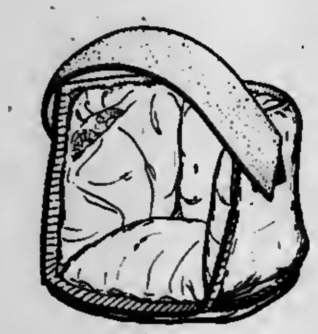

261,822
BATHING SUIT
Michel Joseph, Saverne, France, assignor to ADIDAS Fabrique de Chaussures de Sport, France
Filed Aug. 1, 1979, Ser. No. 62,884
Claims priority, application France, Feb. 6, 1979, 353
Term of patent 14 years
Int. Cl. D2—*02*
U.S. Cl. D2—40

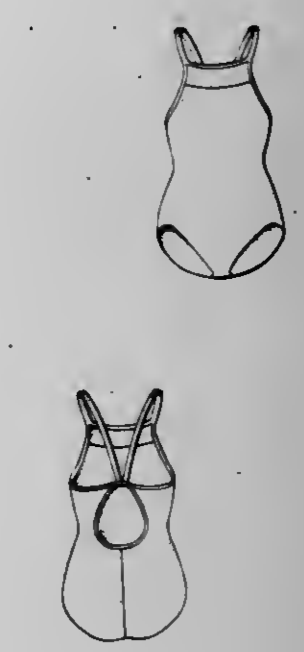

261,823
ATHLETIC SHOE WITH POCKET
Robert J. Gamm, Olivette, Mo., assignor to Envoys U.S.A., Inc., St. Louis, Mo.
Filed Dec. 26, 1979, Ser. No. 107,093
Term of patent 14 years
Int. Cl. D2—*04*
U.S. Cl. D2—309

261,824
PORTION OF A TONGUE FOR A BUCKLE
Don J. Ryon, III, P.O. Box 4250, Fort Worth, Tex. 76106
Filed Jul. 16, 1979, Ser. No. 57,842
Term of patent 14 years
Int. Cl. D2—*07*
U.S. Cl. D2—433

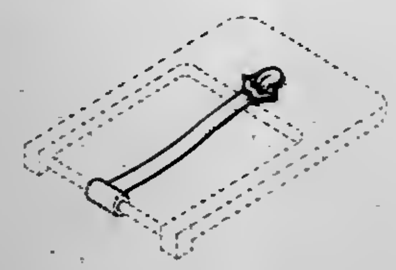

261,825
PORTABLE VANITY CASE
Mason Benson, Red Bank, and James K. McIntosh, Somerset, both of N.J., assignors to Carolina Enterprises, Inc., New York, N.Y.
Filed Oct. 16, 1979, Ser. No. 85,195
Term of patent 14 years
Int. Cl. D3—*02*
U.S. Cl. D3—39

261,826
HOLDER FOR TISSUES
Carol C. Webb, 1662 S. Hayworth Ave., Los Angeles, Calif. 90035
Filed Dec. 26, 1979, Ser. No. 106,705
Term of patent 14 years
Int. Cl. D3—*02*
U.S. Cl. D3—39

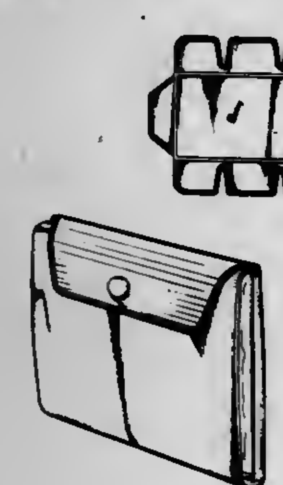

261,827
STORAGE COMPARTMENT FOR AN AUTOMOBILE
Richard S. Dunchock, Farmington Hills, Mich., assignor to SL Container Corporation, Southfield, Mich.
Filed Jul. 13, 1979, Ser. No. 57,366
Term of patent 14 years
Int. Cl. D12—*16*
U.S. Cl. D3—40

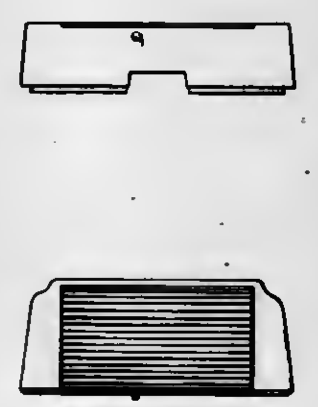

261,828
BABY CHAIR
Shinroku Nakao, Yokohama; Yoshiyasu Ishii, and Masako Mizukami, both of Tokyo, all of Japan, assignors to Combi Co., Ltd., Tokyo, Japan
Filed Jun. 18, 1979, Ser. No. 49,856
Claims priority, application Japan, Dec. 26, 1978, 53/55172
Term of patent 14 years
Int. Cl. D6—*01*
U.S. Cl. D6—7

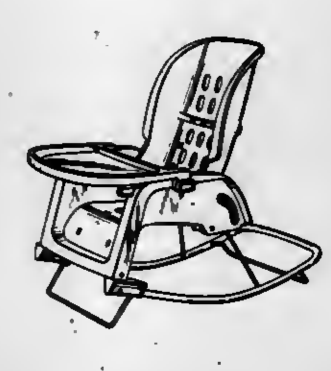

261,829
DISPLAY STAND FOR GREETING CARDS
Marshall C. Brand, Minnetonka, Minn., assignor to Morning Star, Inc., Eden Prairie, Minn.
Filed Jun. 11, 1979, Ser. No. 47,029
Term of patent 14 years
Int. Cl. D20—*02*
U.S. Cl. D6—24

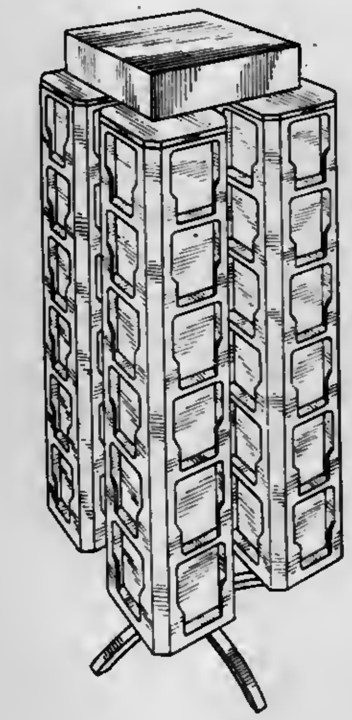

261,830
LOUNGE SEAT
Robert J. Marks, 3450 SW. 12th Ave., C.B. 152, Miramar, Fla. 33027
Division of Ser. No. 823,966, Aug. 12, 1977. This applicatioo Sep. 21, 1979, Ser. No. 77,636
Term of patent 14 years
Int. Cl. D6—*01*
U.S. Cl. D6—37

261,831
AUXILIARY ORTHOPEDIC SEAT FOR AUTOMOBILES
Clarence A. Luckey, 4800 Hildreth La., Stockton, Calif. 95212, assignor to Clarence A. Luckey, Stockton, Calif.
Filed Jan. 8, 1980, Ser. No. 110,400
Term of patent 14 years
Int. Cl. D6—*01*
U.S. Cl. D6—48

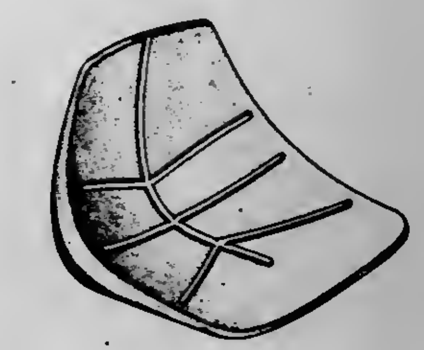

261,832
HANGING LOUNGE SEAT FOR A SPA
Clifford V. Zigmont, 18642 Community St., Northridge, Los Angeles County, Calif. 91324
Filed Oct. 2, 1979, Ser. No. 81,100
Term of patent 14 years
Int. Cl. D6—*01*
U.S. Cl. D6—53

261,833
CHAIR
Mike T. Claman, New York, N.Y., assignor to Lewittes Furniture Enterprises, Inc., New York, N.Y.
Filed Sep. 24, 1979, Ser. No. 77,916
Term of patent 3½ years
Int. Cl. D6—*01*
U.S. Cl. D6—57

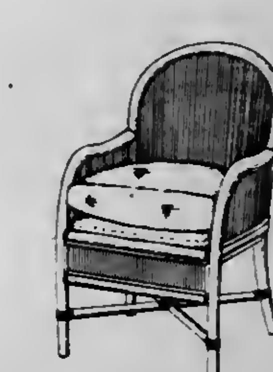

261,834
COMBINED SWIVEL SEAT AND STORAGE BOX OR THE LIKE
Harris A. Stebbins, 10127 Fraser Rd., Jacksonville, Fla. 32202
Filed Aug. 22, 1979, Ser. No. 68,694
Term of patent 14 years
Int. Cl. D6—*05*
U.S. Cl. D6—64

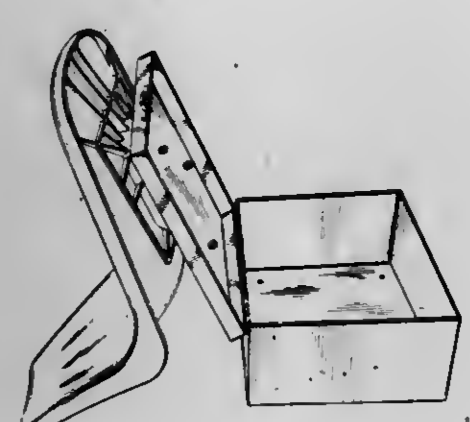

261,835
ARMCHAIR
Karl Lübke, Rheda, Fed. Rep. of Germany, assignor to Lübke GmbH & Co. KG, Rheda, Fed. Rep. of Germany
Filed Jun. 29, 1978, Ser. No. 920,360
Claims priority, application Fed. Rep. of Germany, Jan. 14, 1978, 1064
The portion of the term of this patent subsequent to Mar. 31, 1995, has been disclaimed.
Term of patent 14 years
Int. Cl. D6—*01*
U.S. Cl. D6—73

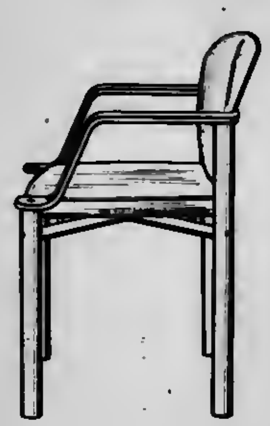

261,836
TELEVISION PROMPTER MOUNT
Alvin S. Eisenberg, Little Neck, N.Y., assignor to Q-Co Industries, Inc., New York, N.Y.
Filed Jul. 16, 1979, Ser. No. 57,847
Term of patent 14 years
Int. Cl. D6—*06*; D8—*08*
U.S. Cl. D6—132

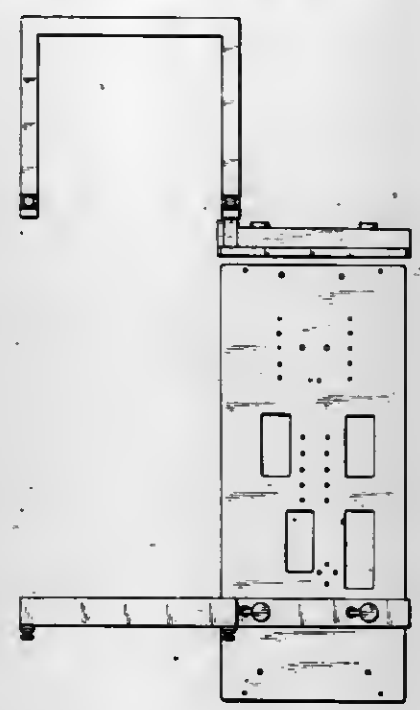

261,837
OVERBED TABLE
Richard Sonder, and Joseph L. Russo, both of New York, N.Y., assignors to Thonet Industries, Inc., York, Pa.
Filed Nov. 28, 1979, Ser. No. 98,170
Term of patent 14 years
Int. Cl. D6—*03*
U.S. Cl. D6—138

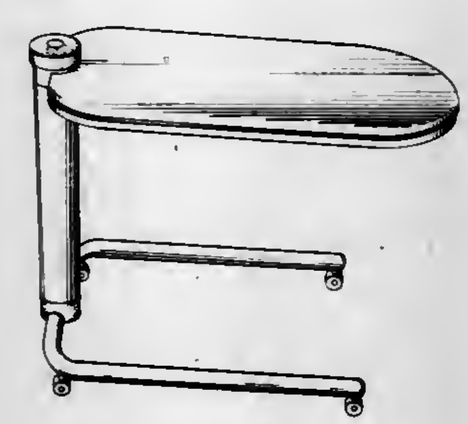

261,838
DESK
James S. Berman, New York, and Sigurd Stegmaier, Malverne, both of N.Y., assignors to Citibank, N.A., New York, N.Y.
Division of Ser. No. 875,941, Feb. 7, 1978. This application Jan. 22, 1980, Ser. No. 114,421
Term of patent 14 years
Int. Cl. D6—*04*
U.S. Cl. D6—157

261,839
COCKTAIL TABLE OR SIMILAR ARTICLE
Donald A. Kvasnicka, 718 N. Logan, Colorado Springs, Colo. 80909
Filed Apr. 18, 1979, Ser. No. 31,116
Term of patent 14 years
Int. Cl. D6—*03*
U.S. Cl. D6—177

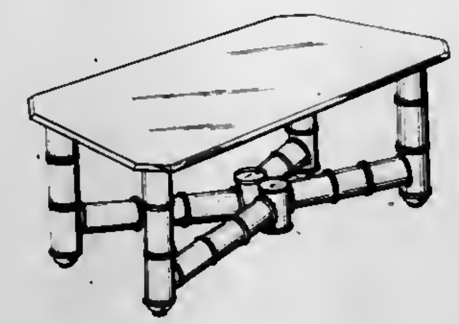

261,840
COCKTAIL TABLE OR SIMILAR ARTICLE
Donald A. Kvasnicka, 718 N. Logan, Colorado Springs, Colo. 80909
Filed Apr. 18, 1979, Ser. No. 31,118
Term of patent 14 years
Int. Cl. D6—*03*
U.S. Cl. D6—177

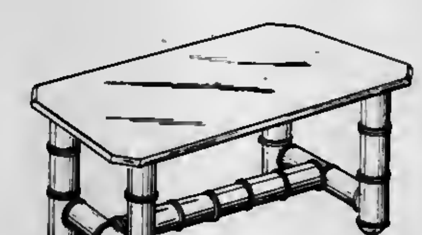

261,841
COCKTAIL TABLE OR SIMILAR ARTICLE
Donald A. Kvasnicka, 718 N. Logan, Colorado Springs, Colo. 80909
Filed Apr. 18, 1979, Ser. No. 31,125
Term of patent 14 years
Int. Cl. D6—*03*
U.S. Cl. D6—179

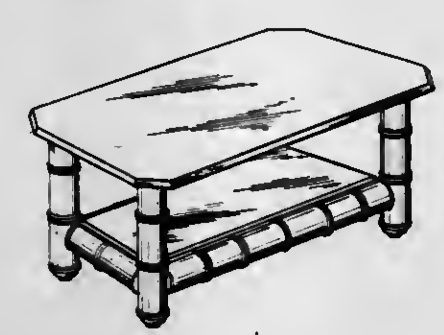

261,842
VALET
Pauline E. Carr, 1037 Country Club Rd., Warsaw, Ind. 46580
Filed Dec. 26, 1979, Ser. No. 107,075
Term of patent 14 years
Int. Cl. D06—*04*
U.S. Cl. D6—186

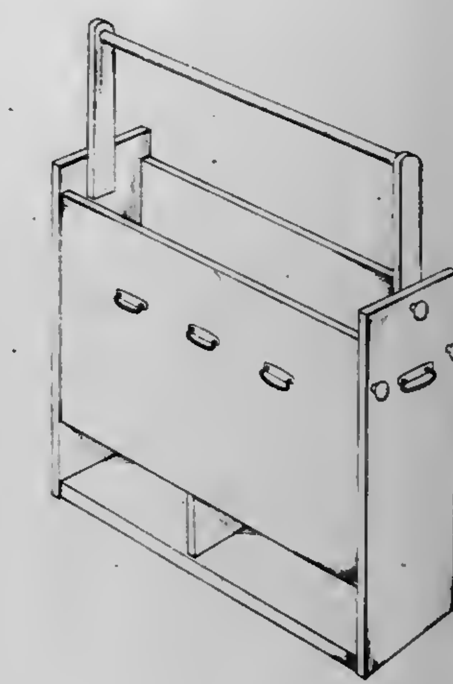

261,843
PORTABLE SUN VISOR ATTACHMENT FOR A SEAT OR SIMILAR ARTICLE
William O. Wall, 6080 Maple La., Pearl Beach, Mich. 48052
Filed Sep. 13, 1978, Ser. No. 941,783
Term of patent 14 years
Int. Cl. D6—*99*
U.S. Cl. D6—191

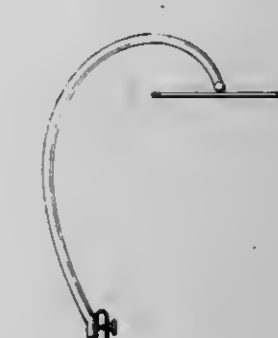

261,844
CHANNEL SUPPORT FOR DRAWER SLIDES
William Blasnik, Demarest, N.J., assignor to Hardware Designers, Inc., Mt. Kisco, N.Y.
Filed Oct. 5, 1979, Ser. No. 82,139
Term of patent 14 years
Int. Cl. D6—*99*
U.S. Cl. D6—191

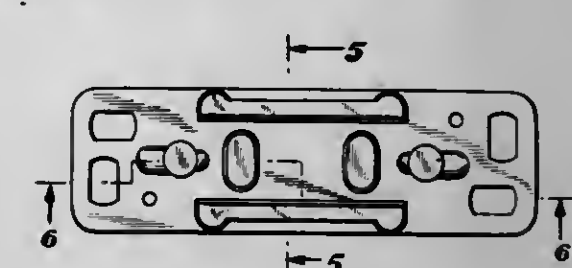

261,845
COMBINED DOUBLE SIDED MIRROR AND SUPPORT THEREFOR
Jean L. Wachtel, Selestat, France, assignor to Celluloid S.A., France
Filed May 2, 1979, Ser. No. 35,301
Claims priority, application France, Apr. 3, 1979, 172
Term of patent 14 years
Int. Cl. D6—*07*
U.S. Cl. D6—233

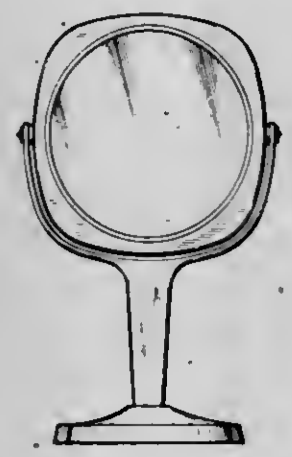

261,846
PICTURE FRAME
Bobby R. Ferguson, Temple Trailer Ct., P.O. Box 27, Warren, Ark. 71671
Filed Sep. 17, 1979, Ser. No. 76,342
Term of patent 14 years
Int. Cl. D6—*07*
U.S. Cl. D6—237

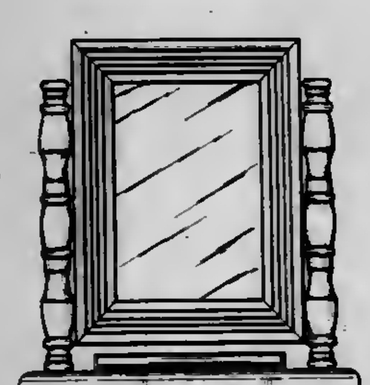

261,847
FOLDING CUP
Hiroaki Yamamoto, Yokohama, Japan, assignor to Tokai Metals Co., Ltd., Kanagawa, Japan
Filed Oct. 15, 1979, Ser. No. 84,769
Claims priority, application Japan, Apr. 13, 1979, 54-14940
Term of patent 14 years
Int. Cl. D07—*01*
U.S. Cl. D7—9

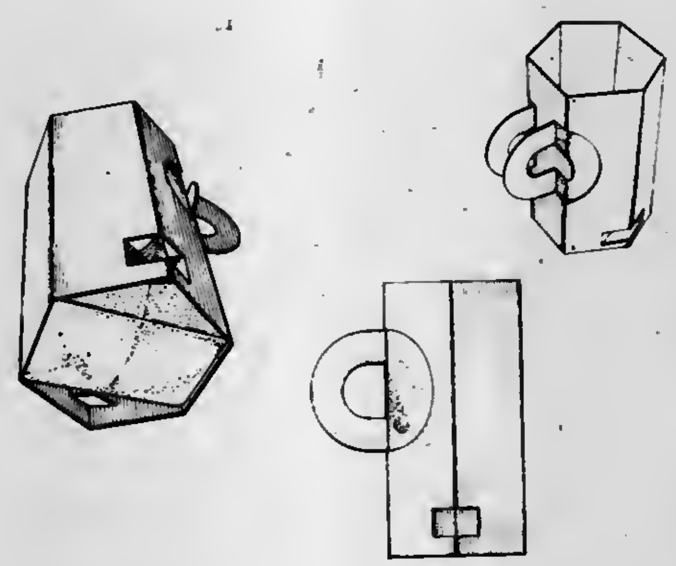

261,848
JACKET-TYPE COASTER
M. Dean Hayden, Jr., 3937 S. 500 East, Salt Lake City, Utah 84107
Filed Aug. 6, 1979, Ser. No. 64,331
Term of patent 14 years
Int. Cl. D07—*06*
U.S. Cl. D7—45

261,849
HOT PLATE
Hirokatsu Funaki, Neyagawa, and Kenichi Katsumata, Katano, both of Japan, assignors to Matsushita Electric Industrial Co., Ltd., Kadoma, Japan
Filed Jan. 4, 1979, Ser. No. 948
Claims priority, application Japan, Jul. 7, 1978, 53/28872
Term of patent 14 years
Int. Cl. D7—*02*
U.S. Cl. D7—123

261,850
COFFEE FILTER HOLDER
Samuel J. Carfagno, 15240 Kittridge St., Van Nuys, Calif. 91405
Filed Oct. 15, 1979, Ser. No. 85,008
Term of patent 14 years
Int. Cl. D7—*04*
U.S. Cl. D7—129

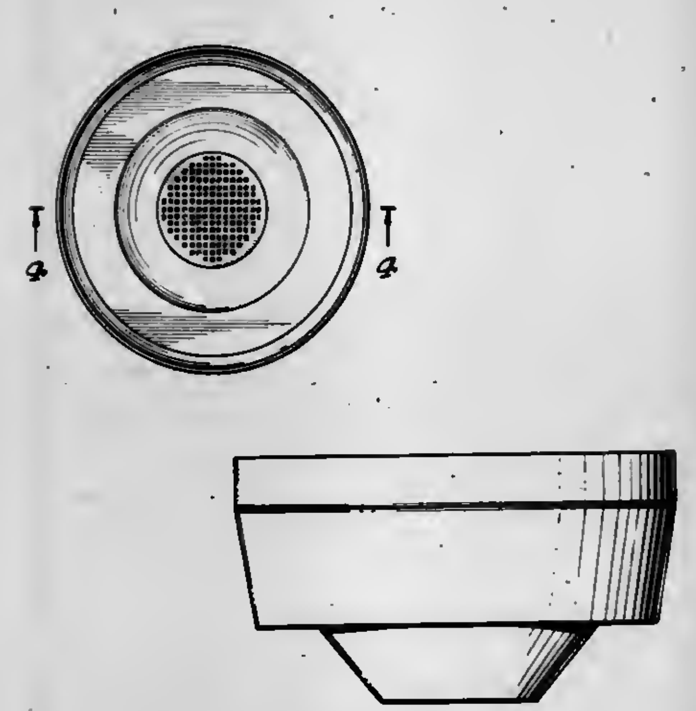

261,851
HOUSING FOR HAND VACUUM AND THE LIKE
Oliver W. Masterson, Chicago; Charles A. Harrison, Evanston, and Buckley A. Singletary, Plainfield, all of Ill., assignors to Sears, Roebuck & Co., Chicago, Ill.
Filed Mar. 9, 1979, Ser. No. 18,929
Term of patent 14 years
Int. Cl. D7—*05*
U.S. Cl. D32—18

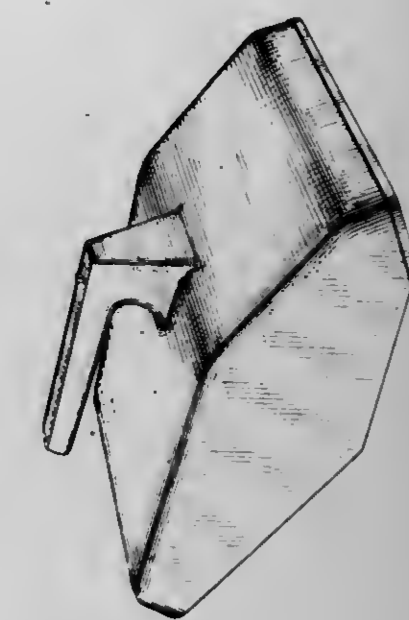

261,852
NEWSPAPER GRATE
Wilfred R. George, 16 Bonita Ave., Piedmont, Calif. 94611
Filed Jan. 9, 1980, Ser. No. 110,831
Term of patent 14 years
Int. Cl. D7—*08*
U.S. Cl. D7—207

261,853
TOMATO STAKE OR THE LIKE
John Gigante, 600 Hilltop Ter., Cliffside Park, N.J. 07010
Filed Nov. 9, 1979, Ser. No. 93,143
Term of patent 14 years
Int. Cl. D31—*00*
U.S. Cl. D8—01

261,854
TWIST-OFF CAP GRIPPER
Fred Nielsen, P.O. Box 63, Del Mar, Calif. 92014
Filed Dec. 17, 1979, Ser. No. 104,709
Term of patent 14 years
Int. Cl. D07—*99*
U.S. Cl. D8—40

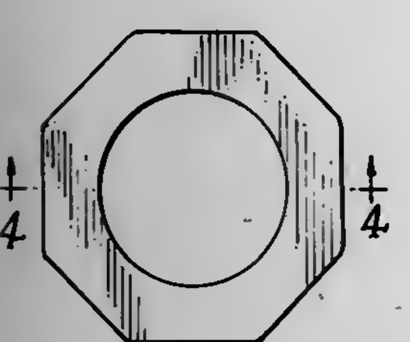

261,855
MAT CUTTER
Edmond A. Neal, Southbridge, and Francis Dusza, Holland, both of Mass., assignors to Russell Harrington Cutlery, Inc., Southbridge, Mass.
Filed Dec. 3, 1979, Ser. No. 99,574
Term of patent 14 years
Int. Cl. D8—*05*
U.S. Cl. D8—98

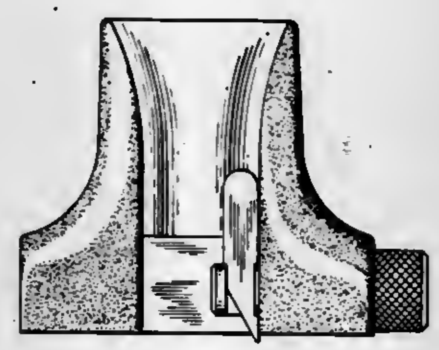

261,856
DOOR HANDLE AND LOCKSET
Edward H. Meisner, Wyckoff, N.J., assignor to Scovill Inc., Waterbury, Conn.
Filed Jun. 26, 1978, Ser. No. 918,746
Term of patent 14 years
Int. Cl. D8—*06, 07*
U.S. Cl. D8—301

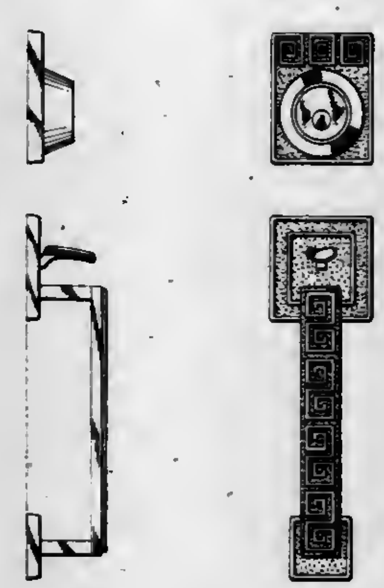

261,857
COMBINED DOOR LEVER AND ESCUTCHEON UNIT
Pasquale Valli, Milan, Italy, assignor to Valli & Colombo S.p.A., Italy
Filed Jul. 25, 1980, Ser. No. 172,637
Claims priority, application Italy, Feb. 8, 1980, 20751/80[U]
Term of patent 14 years
Int. Cl. D8—*06, 09*
U.S. Cl. D8—301

261,858
TRAILER KING PIN LOCK
Will M. Lassiter, 1703 Deep River Rd., High Point, N.C. 27260
Filed Aug. 20, 1979, Ser. No. 67,828
Term of patent 14 years
Int. Cl. D8—*07*
U.S. Cl. D8—331

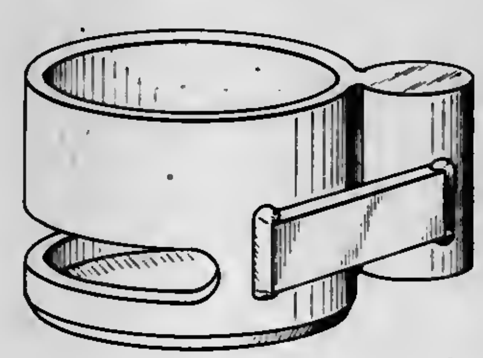

261,859
TACKLESS CARPET STRIPPING
Lawrence R. Sutton, 3530 Beaconsfield, Detroit, Mich. 48224, and Carl P. Ranno, 37455 Lakeville Rd., Mt. Clemens, Mich. 48013
Continuation-in-part of Ser. No. 827,177, Aug. 23, 1977, abandoned. This application Nov. 17, 1980, Ser. No. 207,602
Term of patent 14 years
Int. Cl. D8—*08*
U.S. Cl. D8—389

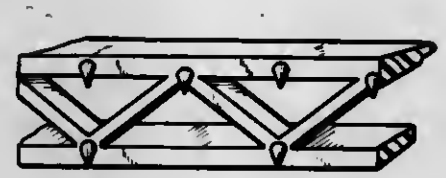

261,860
COMBINED LOUVER CLIP AND RETAINER THEREFOR
Salvatore A. Dalia, 2125 W. 234 St., Torrance, Calif. 90501
Filed Aug. 29, 1979, Ser. No. 70,913
Term of patent 14 years
Int. Cl. D8—*08*
U.S. Cl. D8—395

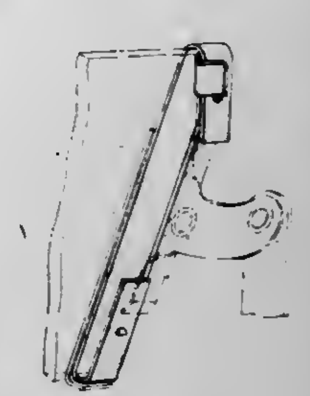

261,861
PANTYHOSE PACKAGE
Gary L. Carter, Burlington, N.C., assignor to Burlington Industries, Inc., Greensboro, N.C.
Filed Oct. 19, 1979, Ser. No. 86,667
Term of patent 14 years
Int. Cl. D9—*03*
U.S. Cl. D9—305

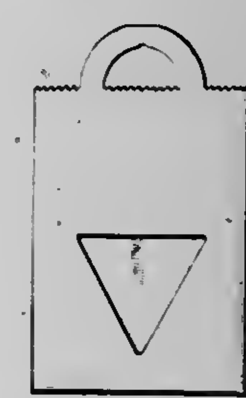

261,862
BOTTLE
Giuliana Camerino, Castello 6123, Venice, Italy
Division of Ser. No. 847,419, Oct. 31, 1977. This application Jul. 30, 1979, Ser. No. 62,228
Term of patent 14 years
Int. Cl. D9—*01*
U.S. Cl. D9—319

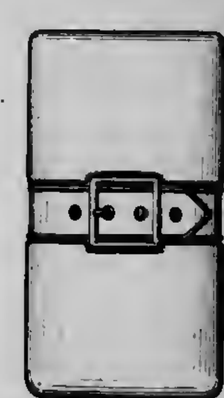

261,863
JAR
John Pardo, Yonkers, N.Y., assignor to The Procter & Gamble Co., Cincinnati, Ohio
Filed Oct. 12, 1979, Ser. No. 84,257
Term of patent 14 years
Int. Cl. D9—*01*
U.S. Cl. D9—353

261,864
BOTTLE
Ralph J. Abramo, Holliston, Mass., assignor to Sunbeam Plastics Corporation, Evansville, Ind.
Filed Sep. 19, 1979, Ser. No. 77,098
Term of patent 14 years
Int. Cl. D9—*01*
U.S. Cl. D9—378

261,865
CONTAINER FOR LOTION
Kristi L. Davis, and Ronald M. Davis, both of 9632 Pumice La., Central Point, Oreg. 97502
Filed Feb. 28, 1979, Ser. No. 16,285
Term of patent 14 years
Int. Cl. D9—*01*
U.S. Cl. D9—389

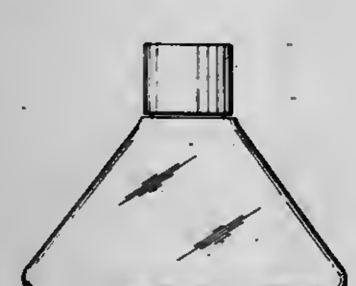

261,866
PACKAGING CONTAINER
Tetsuo Matsumoto, Tokyo, Japan, assignor to Yakult Honsha Co., Ltd., Japan
Filed Dec. 8, 1978, Ser. No. 967,721
Term of patent 14 years
Int. Cl. D9—*03*
U.S. Cl. D9—432

261,867
PULL TAB FOR A TEAR STRIP OPENER
Gary K. Hasegawa, Chicago, Ill., assignor to The Continental Group, Inc., Stamford, Conn.
Filed Apr. 19, 1979, Ser. No. 31,663
Term of patent 14 years
Int. Cl. D9—*07*
U.S. Cl. D9—438

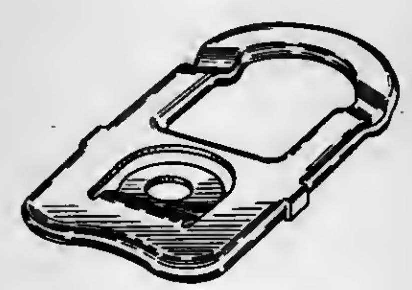

261,868
PULL TAB FOR A TEAR STRIP OPENER
James J. Fridl, Darien, and Gary K. Hasegawa, Chicago, both of Ill., assignors to The Continental Group, Inc., Stamford, Conn.
Filed Apr. 19, 1979, Ser. No. 31,664
Term of patent 14 years
Int. Cl. D9—*07*
U.S. Cl. D9—438

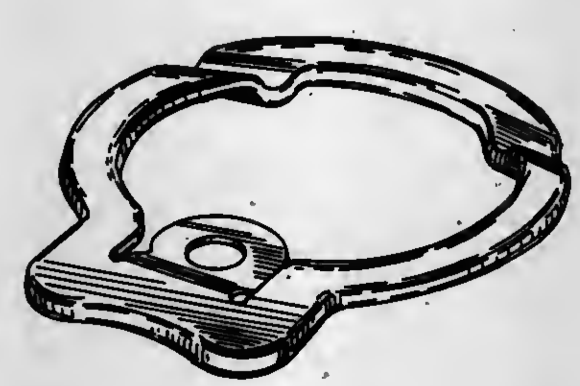

261,869
GRANDFATHER CLOCK
John Boukma, Grandville, Mich., assignor to Howard Miller Clock Co., Zeeland, Mich.
Filed Dec. 11, 1979, Ser. No. 102,373
Term of patent 14 years
Int. Cl. D10—*01*
U.S. Cl. D10—16

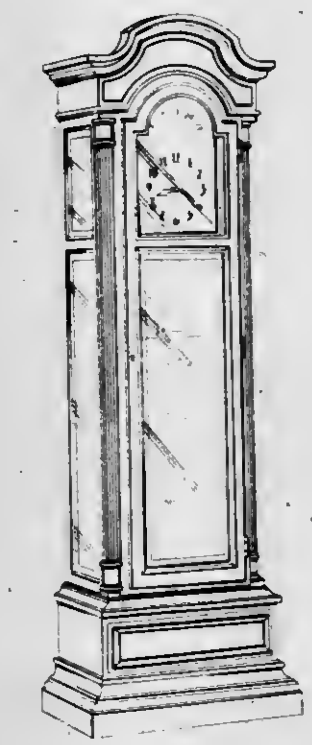

261,870
POWER AND TEST MODULE
David K. Litt, 11824 Chicago Plz. #3, Omaha, Nebr. 68154
Filed Dec. 10, 1979, Ser. No. 102,141
Term of patent 14 years
Int. Cl. D10—*04*
U.S. Cl. D10—75

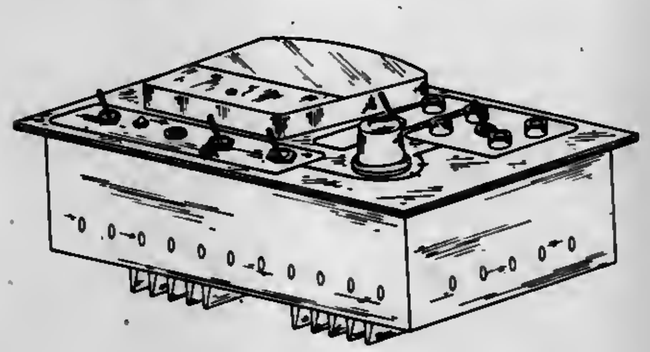

261,871
SALINITY TESTER
Raymond F. Akers, Jr., Mantua, N.J., assignor to Raycal Corporation, Mantua, N.J.
Filed Aug. 6, 1979, Ser. No. 64,334
Term of patent 14 years
Int. Cl. D10—*04*
U.S. Cl. D10—81

261,872
JEWELRY PIN
Robert Fletcher, Los Angeles, Calif., assignor to Paramount Pictures Corporation, Los Angeles, Calif.
Filed Apr. 10, 1979, Ser. No. 28,845
Term of patent 14 years
Int. Cl. D11—*01*
U.S. Cl. D11—70

261,873
NOVELTY STATUETTE
William R. Marchand, 3319 Shore Ave., Everett, Wash. 98203
Filed Sep. 28, 1979, Ser. No. 79,818
Term of patent 14 years
Int. Cl. D11—*02*
U.S. Cl. D11—131

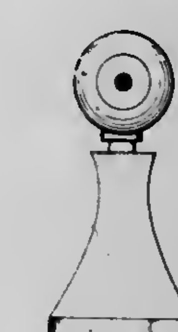

261,874
CONTAINER FOR SOIL-FREE PLANT GROWTH MEDIUM
Abraham I. Tenzer, Longwood, Fla., assignor to Dart Industries Inc., Los Angeles, Calif.
Filed Apr. 21, 1978, Ser. No. 898,370
Term of patent 14 years
Int. Cl. D11—*02*
U.S. Cl. D11—143

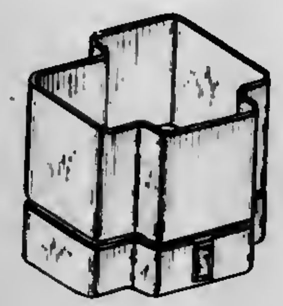

261,875
GROUND STAKE
Edward E. Anderson, 9323 Bennett Lake Rd., Fenton, Mich. 48430
Filed Nov. 24, 1978, Ser. No. 963,350
Term of patent 14 years
Int. Cl. D11—*05*
U.S. Cl. D11—181

261,876
MOTORTRICYCLE
Atsushi Ishiyama, Tokyo, Japan, assignor to Yamaha Hatsudoki Kabushiki Kaisha, Japan
Filed Aug. 29, 1979, Ser. No. 70,618
Claims priority, application Japan, Mar. 6, 1979, 54-8453
Term of patent 14 years
Int. Cl. D12—*11*
U.S. Cl. D12—110

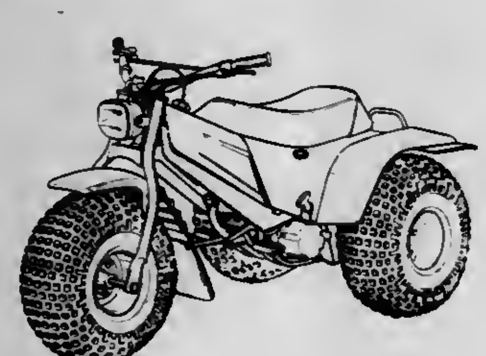

261,877
VEHICLE TIRE
Takeshi Sato, Akikawa; Tooru Oosawa, Urawa, and Hiroshi Kojima, Hino, all of Japan, assignors to Bridgestone Tire Co., Ltd., Tokyo, Japan
Filed Dec. 19, 1978, Ser. No. 971,126
Claims priority, application Japan, Oct. 28, 1978, 53-45611
Term of patent 14 years
Int. Cl. D12—*15*
U.S. Cl. D12—141

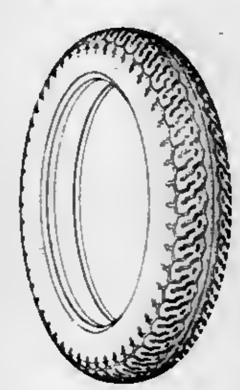

261,878
TIRE
Andre E. J. Baus, Bettembourg; Jean F. L. Fontaine, Ingeldorf, and Brian L. Ham, Mertzig, all of Luxembourg, assignors to The Goodyear Tire & Rubber Company, Akron, Ohio
Filed Feb. 21, 1979, Ser. No. 13,589
Claims priority, application United Kingdom, Nov. 3, 1978, 987124/78
Term of patent 14 years
Int. Cl. D12—*15*
U.S. Cl. D12—147

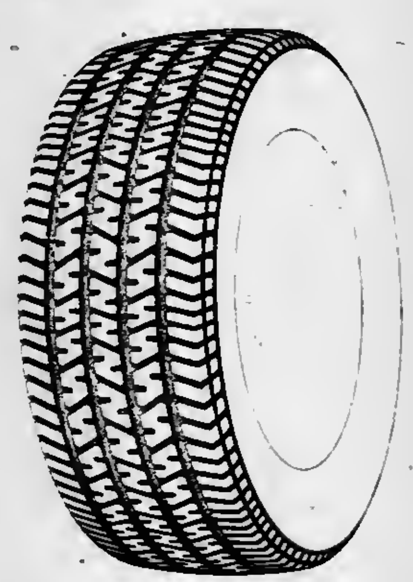

261,879
WHEEL
Björn E. A. Envall, Vänersborg, and Aribert Vahlenbreder, Trollhättan, both of Sweden, assignors to Saab-Scania Aktiebolag, Trollhättan, Sweden
Filed Oct. 16, 1978, Ser. No. 951,848
Claims priority, application Sweden, Apr. 14, 1978, 781036
Term of patent 14 years
Int. Cl. D12—*16*
U.S. Cl. D12—211

261,880
WHEEL
Russell O. Blanchard, Marshall; Joseph Guzek, Lansing, and Donald A. Matt, Bath, all of Mich., assignors to Motor Wheel Corporation, Lansing, Mich.
Filed Jan. 22, 1979, Ser. No. 5,344
Term of patent 14 years
Int. Cl. D12—*16*
U.S. Cl. D12—211

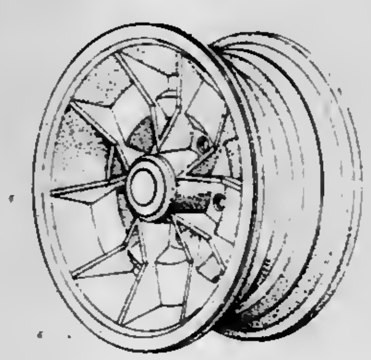

261,881
BATTERY ELIMINATOR
Norbert L. Reiner, Wallingford; Keith R. Wruck, West Hartford, and F. Robert Amici, Northford, all of Conn., assignors to Coleco Industries, Inc., Hartford, Conn.
Filed Jul. 13, 1979, Ser. No. 57,343
Term of patent 14 years
Int. Cl. D13—*02*
U.S. Cl. D13—11

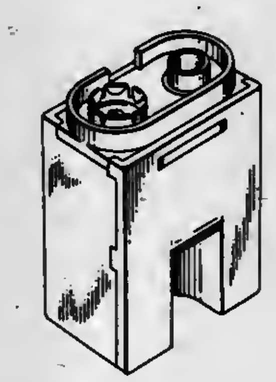

261,882
RECORD PLAYER
Shuichi Obata, Kyoto, and Takamichi Nakagawa, Hirakata, both of Japan, assignors to Matsushita Electric Industrial Co., Ltd., Kadoma, Japan
Filed Feb. 20, 1980, Ser. No. 122,907
Claims priority, application Japan, Aug. 23, 1979, 54-35297
Term of patent 14 years
Int. Cl. D14—*01*
U.S. Cl. D14—14

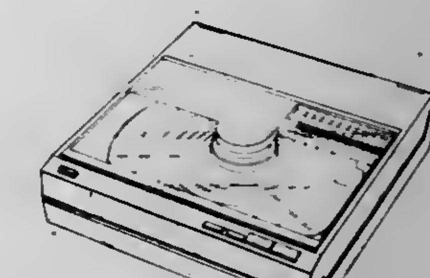

261,883
SPEAKER ASSEMBLY
Roger H. Russell, Binghamton, and Thomas A. Rogers, Vestal, both of N.Y., assignors to McIntosh Laboratories, Inc., Binghamton, N.Y.
Filed Mar. 6, 1979, Ser. No. 18,097
Term of patent 14 years
Int. Cl. D14—*03*
U.S. Cl. D14—33

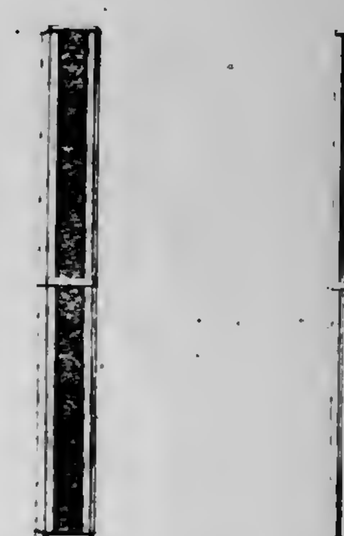

261,884
INFORMATION DISPLAY TERMINAL
Anthony C. Beadle, Barnet; Keith E. Minters, Wallington, and John Stoddard, London, all of England, assignors to International Standard Electric Corporation, New York, N.Y.
Filed Sep. 28, 1978, Ser. No. 946,674
Term of patent 14 years
Int. Cl. D14—*02*
U.S. Cl. D14—106

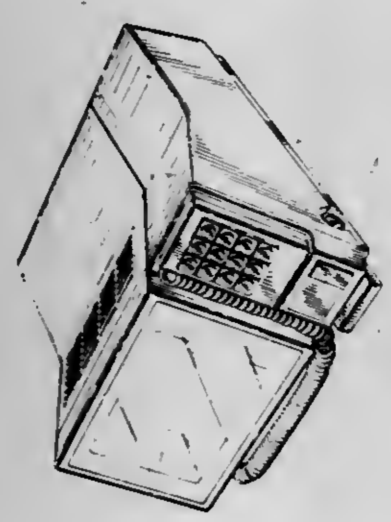

261,885
DISTANCE COMPUTER FOR LIGHT AIRCRAFT
Daryl W. Davies, Los Angeles, and Harry P. Levin, North Hollywood, both of Calif., assignors to Aerodata Corporation, Burbank, Calif.
Filed Mar. 2, 1979, Ser. No. 16,972
Term of patent 7 years
Int. Cl. D14—*02*
U.S. Cl. D14—106

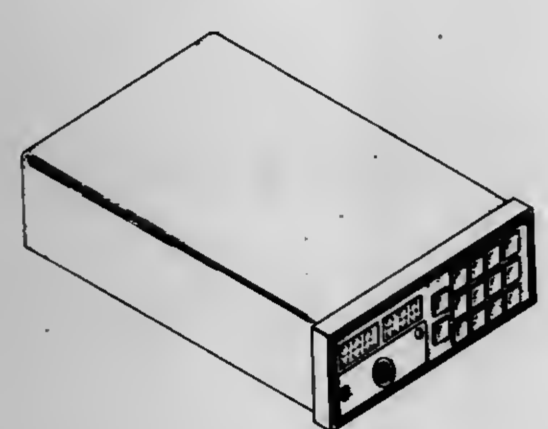

261,886
TRANSCEIVER FOR A CAR TELEPHONE SET
Hisao Fukushima, and Junji Hirooka, both of Tokyo, Japan, assignors to Oki Electric Industry Co., Ltd., Tokyo, Japan
Filed Jul. 16, 1979, Ser. No. 57,579
Claims priority, application Japan, Jan. 25, 1979, 54-002013
Term of patent 14 years
Int. Cl. D14—*03*
U.S. Cl. D14—94

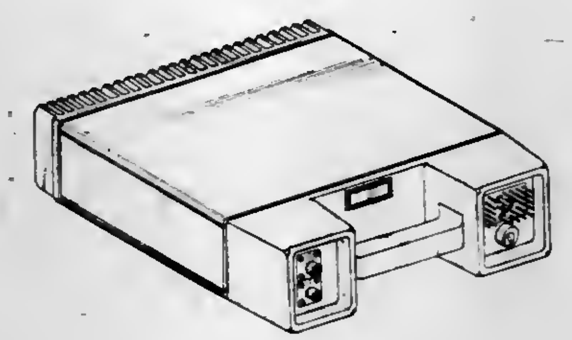

261,887
AMPLIFIER FOR AUTOMOBILE
Toshiyuki Hisatsune, Soka, Japan, assignor to Clarion Co., Ltd., Tokyo, Japan
Filed Oct. 26, 1979, Ser. No. 88,623
Claims priority, application Japan, Apr. 26, 1979, 54-17300
Term of patent 14 years
Int. Cl. D14—*03*
U.S. Cl. D14—96

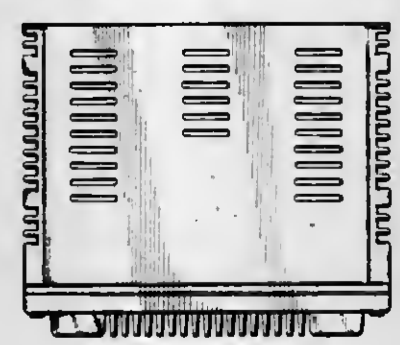

261,888
CASSETTE TAPE ERASER
Mervin B. Kronfeld, Edina, and Bruce J. Rubin, Minneapolis, both of Minn., assignors to Nortronics Company, Inc., Minneapolis, Minn.
Filed May 24, 1979, Ser. No. 41,921
Term of patent 14 years
Int. Cl. D14—*99*
U.S. Cl. D14—99

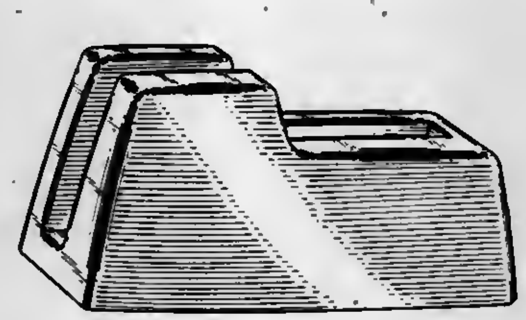

261,889
MOWER-CONDITIONER
George B. Cicci, Burr Ridge, and Thomas J. Scarnato, Barrington, both of Ill., assignors to International Harvester Company, Chicago, Ill.
Filed Jan. 31, 1979, Ser. No. 8,009
Term of patent 14 years
Int. Cl. D15—*03*
U.S. Cl. D15—27

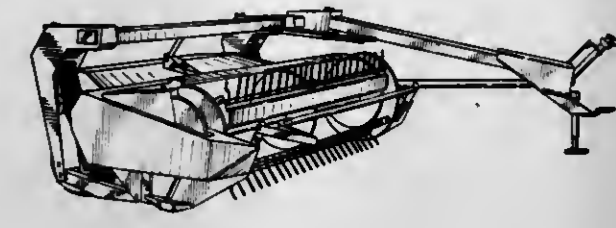

261,890
HOUSING FOR A SOFT ICE CREAM MACHINE
Frank S. Caspersen, Savage, Minn., assignor to National Food-line Corporation, Wayzata, Minn.
Filed Oct. 11, 1979, Ser. No. 83,973
Term of patent 14 years
Int. Cl. D15—*08*
U.S. Cl. D15—82

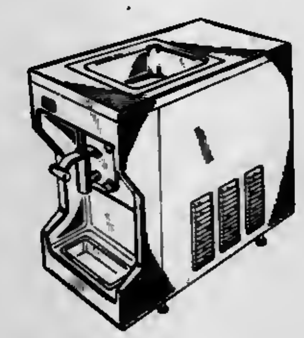

261,891
REFRIGERATOR WINE RACK
Dennis M. Thompson, Fairfax, and George E. Thompson, III, San Francisco, both of Calif., assignors to Ursus Enterprises Ltd., San Francisco, Calif.
Filed Sep. 24, 1979, Ser. No. 78,010
Term of patent 14 years
Int. Cl. D15—*07*
U.S. Cl. D15—89

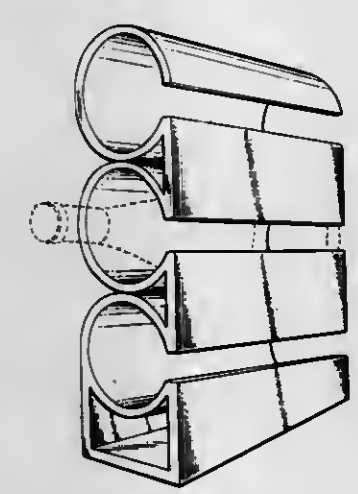

261,892
MILK-SHAKER
J. P. Huser, Meggen, Switzerland, assignor to Utilis Mullheim Aktiengesellschaft, Mullheim, Switzerland
Filed Dec. 27, 1978, Ser. No. 974,135
Claims priority, application Hague, Oct. 2, 1978, 67615
Term of patent 14 years
Int. Cl. D15—*08*; D7—*04*
U.S. Cl. D15—99

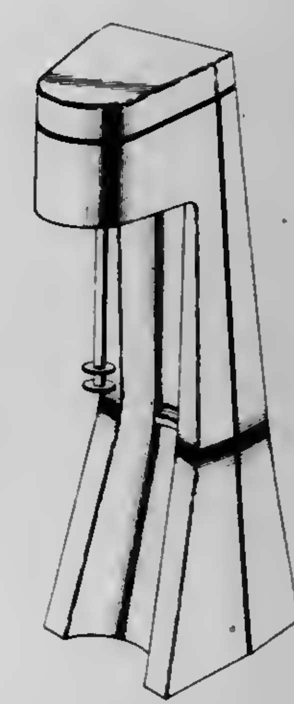

261,893
GUARD FOR CUTTING MACHINE
George Beriant, Bellrose, N.Y., assignor to New Hermes Incorporated, New York, N.Y.
Filed Jun. 25, 1979, Ser. No. 51,925
Term of patent 14 years
Int. Cl. D15—*99*
U.S. Cl. D15—127

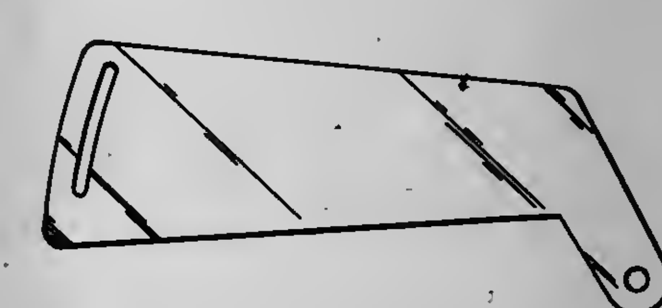

261,894
CAMERA
Bodo Mielke, Wolfenbuttel, Fed. Rep. of Germany, assignor to Rollei-Werke Franke & Heidecke, Fed. Rep. of Germany
Filed Sep. 12, 1979, Ser. No. 75,166
Term of patent 14 years
Int. Cl. D16—*01*
U.S. Cl. D16—6

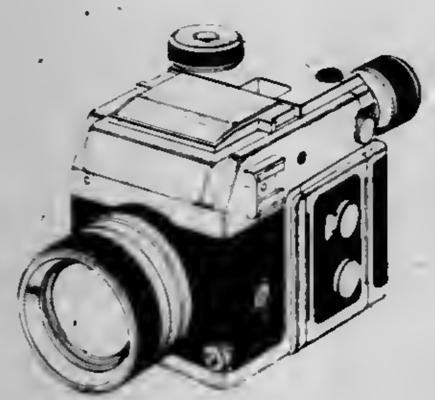

261,895
PROJECTION SYSTEM
Peter J. Frisella, St. Louis County, Mo., assignor to Scottie Graphics Inc., St. Louis, Mo.
Continuation of Ser. No. 830,485, Sep. 6, 1977. This application Sep. 24, 1979, Ser. No. 78,575
Term of patent 14 years
Int. Cl. D16—*02*
U.S. Cl. D16—20

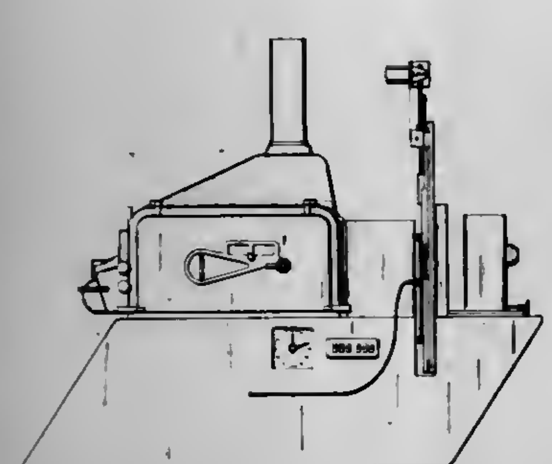

261,896
CONTACT LENS INSERTING INSTRUMENT
Herbert L. Schurgin, 26 Juniper St., Wenham, Mass. 01984, and Paul H. Eldridge, 14 Manning St., Ipswich, Mass. 01938
Filed Feb. 12, 1979, Ser. No. 11,894
Term of patent 14 years
Int. Cl. D16—*06*
U.S. Cl. D16—124

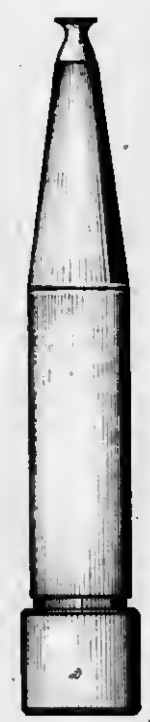

261,897
HAND STAMP
Algot E. Bengtsson, Box 17, 501 02 Boras, Sweden
Filed Apr. 6, 1979, Ser. No. 27,560
Term of patent 14 years
Int. Cl. D19—*02*
U.S. Cl. D18—15

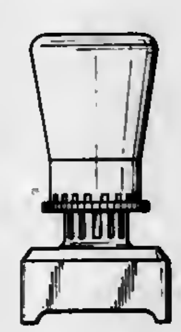

261,898
TYPEFACE FOR PHOTOCOMPOSITION
Iraida N. Chepil, ulitsa Baikalskaya, 44, korpus 1, kv. 138; Lev B. Levin, ulitsa Gorkogo, 12, kv. 286; Grigory K. Bezprozvanny, ulitsa Profsojuznaya, 109, kv. 150, and Yakov P. Shturman, ulitsa Bochkova, 8, kv. 164, all of Moscow, U.S.S.R.
Filed May 1, 1978, Ser. No. 901,749
Term of patent 14 years
Int. Cl. D18—*03*
U.S. Cl. D18—25

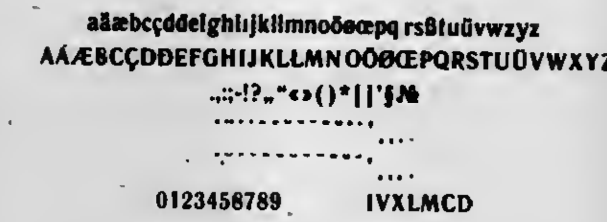

261,899
TYPEFACE FOR PHOTOCOMPOSITION
Iraida N. Chepil, ulitsa Baikalskaya, 44, korpus 1, kv. 138; Lev B. Levin, ulitsa Gorkogo, 12, kv. 286; Grigory K. Bezprozvanny, ulitsa Profsojuznaya, 109, kv. 150, and Yakov P. Shturman, ulitsa Bochkova, 8, kv. 164, all of Moscow, U.S.S.R.
Filed May 1, 1978, Ser. No. 901,750
Term of patent 14 years
Int. Cl. D18—*03*
U.S. Cl. D18—25

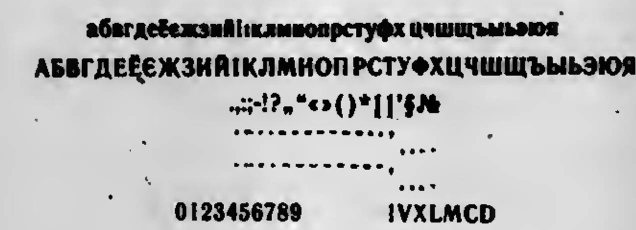

261,900
TYPEFACE FOR PHOTOCOMPOSITION
Iraida N. Chepil, ulitsa Baikalskaya, 44, korpus 1, kv. 138; Lev B. Levin, ulitsa Gorkogo, 12, kv. 286; Grigory K. Bezprozvanny, ulitsa Profsojuznaya, 109, kv. 150, and Yakov P. Shturman, ulitsa Bochkova 8, kv. 164, all of Moscow, U.S.S.R.
Filed May 1, 1978, Ser. No. 901,751
Term of patent 14 years
Int. Cl. D18—*03*
U.S. Cl. D18—25

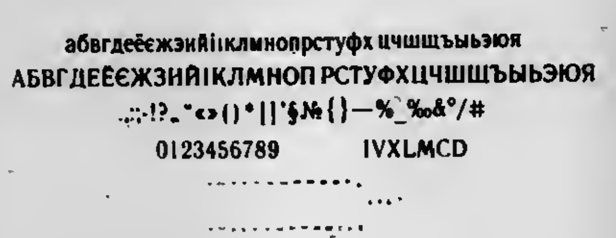

261,901
SHAFT FOR A MARKING INSTRUMENT
Melvin C. Coffman, 1326 S. Elizabeth St., Denver, Colo. 80210
Filed Sep. 29, 1978, Ser. No. 947,155
Term of patent 14 years
Int. Cl. D19—*06*
U.S. Cl. D19—54

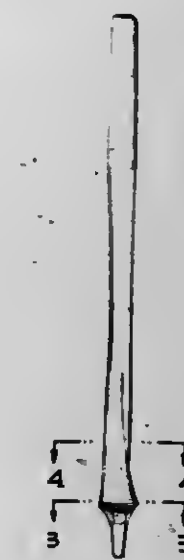

261,902
COMBINED LOOSE LEAF HOLDER AND DISPLAY ARTICLE
Sterling A. Oakley, 3100 Crescent River Dr., Boise, Id. 83704
Filed Oct. 25, 1979, Ser. No. 87,991
Term of patent 14 years
Int. Cl. D19—*02*
U.S. Cl. D19—78

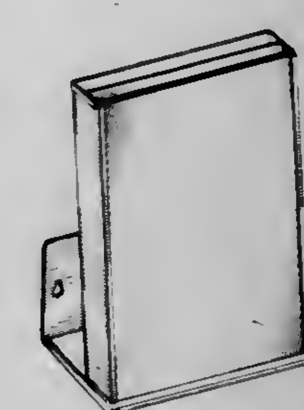

261,903
COMBINED CLIPBOARD AND FILE CONTAINER
Bernard H. Mulder, 727 W. Sixth St., Hinsdale, Ill. 60521
Filed Mar. 31, 1980, Ser. No. 135,457
Term of patent 14 years
Int. Cl. D19—*02*
U.S. Cl. D19—88

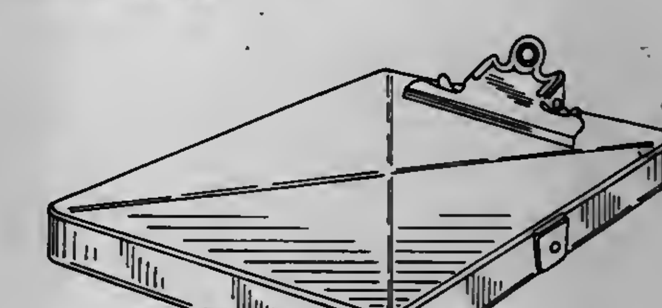

261,904
STACKED LETTER TRAY
Marian H. Polhemus, Chicago, Ill., assignor to Tenex Corporation, Elk Grove Village, Ill.
Filed Feb. 22, 1980, Ser. No. 123,674
Term of patent 14 years
Int. Cl. D19—*02*
U.S. Cl. D19—92

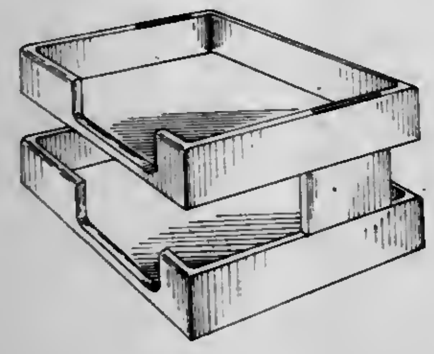

261,905
IDENTIFICATION LABEL
Drew R. Smith, 1128 E. Elm, Fullerton, Calif. 90064
Filed Dec. 27, 1977, Ser. No. 864,667
Term of patent 14 years
Int. Cl. D20—*02*
U.S. Cl. D20—27

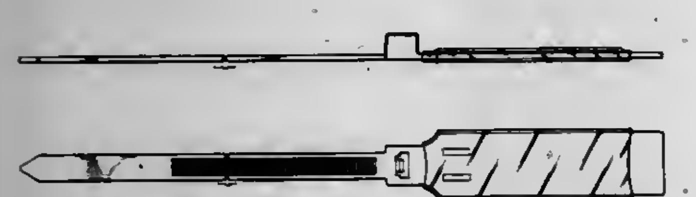

261,906
MARBLE GAME PLAYING BOARD
Sanji Sato, Tokyo, Japan, assignor to Yonezawa Toys Co. Ltd., Tokyo, Japan
Filed Sep. 20, 1979, Ser. No. 77,372
Term of patent 14 years
Int. Cl. D21—*01*
U.S. Cl. D21—12

261,907
ELECTRONIC GAME HOUSING
Shun K. Ho, Hong Kong, Hong Kong, assignor to Gilman & Co., Ltd., Hong Kong, Hong Kong
Filed Oct. 1, 1979, Ser. No. 81,073
Claims priority, application United Kingdom, May 29, 1979, 990075/79
Term of patent 14 years
Int. Cl. D21—*01*
U.S. Cl. D21—13

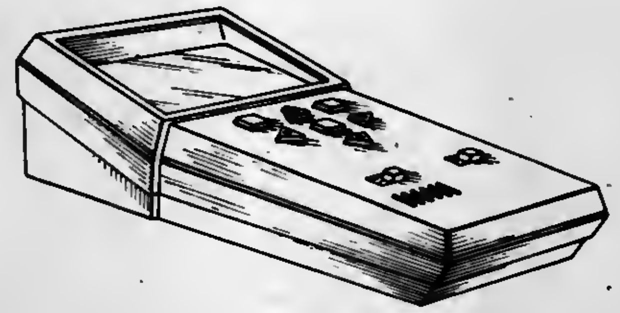

261,908
SIMULATIVE BUBBLE BLOWER
Alan M. Steinberg, Rockland County, N.Y., assignor to Gordy International Incorporated, New York, N.Y.
Filed Jul. 5, 1979, Ser. No. 54,670
Term of patent 14 years
Int. Cl. D21—*01*
U.S. Cl. D21—61

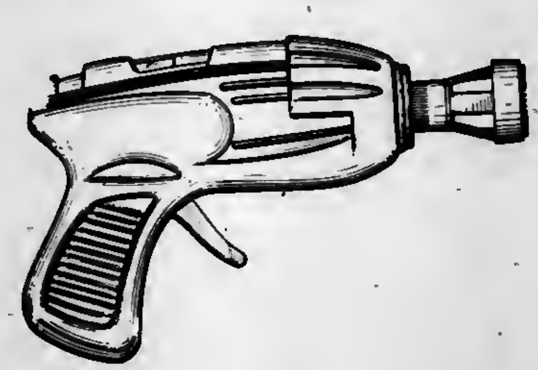

261,909
BALANCING TOY
Richard Heatwole, Decatur, Ill., assignor to James A. Southerland, Marshall, Ill., a part interest
Filed Sep. 10, 1979, Ser. No. 73,831
Term of patent 14 years
Int. Cl. D21—*02*
U.S. Cl. D21—66

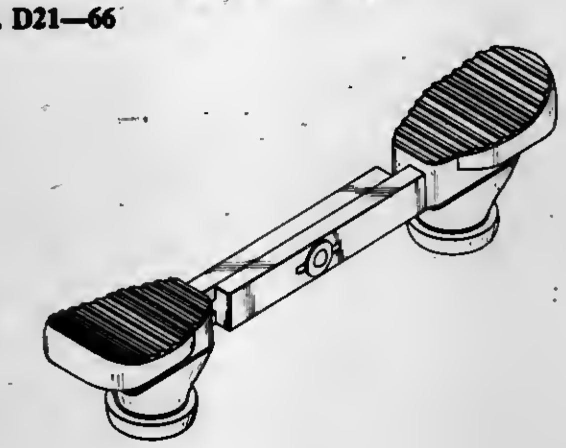

261,910
HOOP GUIDE
George B. Hamrick, 547 Lake Howell Rd., Maitland, Fla. 32751
Filed Apr. 2, 1979, Ser. No. 25,770
Term of patent 14 years
Int. Cl. D21—*01*
U.S. Cl. D21—101

261,911
POCKET SIZE MAZE GAME BOX
Masaki Mayuzumi, Tokyo, Japan, assignor to Tomy Kogyo Co., Inc., Tokyo, Japan
Filed Oct. 1, 1979, Ser. No. 80,570
Term of patent 14 years
Int. Cl. D21—*01*
U.S. Cl. D21—104

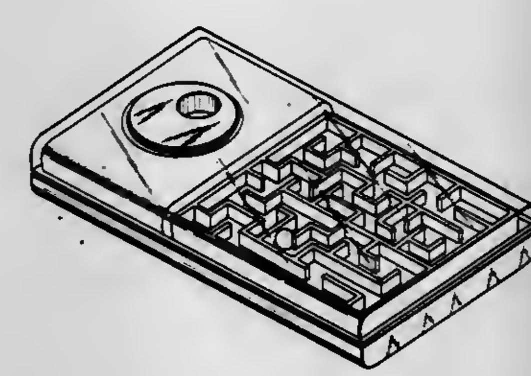

261,912
TOY RACE CAR
Jack L. Breneman, Orchard Park, N.Y., assignor to The Quaker Oats Company, Chicago, Ill.
Filed Jan. 4, 1980, Ser. No. 109,623
Term of patent 14 years
Int. Cl. D21—*01*
U.S. Cl. D21—137

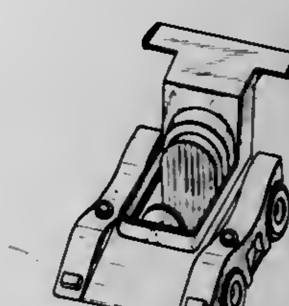

261,913
SIMULATIVE TRUNDLE TOY
Donald E. Welch, 3102 Bayou, Deer Park, Tex. 77536
Filed Jul. 25, 1979, Ser. No. 60,805
Term of patent 14 years
Int. Cl. D21—*01*
U.S. Cl. D21—150

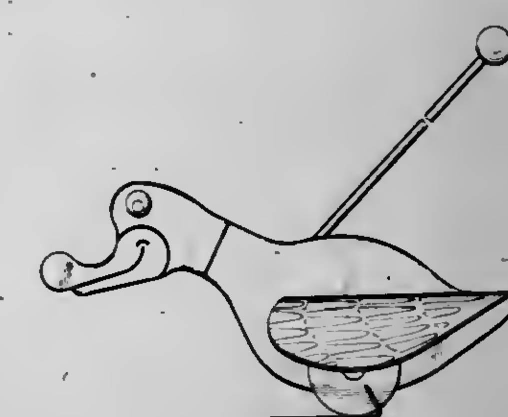

261,914
STUFFED TOY DOG
Karen D. Marconi, East Aurora, N.Y., assignor to The Quaker Oats Company, Chicago, Ill.
Filed Jan. 2, 1980, Ser. No. 109,155
Term of patent 14 years
Int. Cl. D21—*01*
U.S. Cl. D21—161

261,915
ANIMATE FIGURE TOY
Shinroku Nakao, Yokohama; Yoshiyasu Ishii, and Taira Hanashima, both of Tokyo, all of Japan, assignors to Combi Co., Ltd., Tokyo, Japan
Filed Jul. 24, 1979, Ser. No. 62,278
Claims priority, application Japan, Mar. 5, 1979, 54-8523
Term of patent 14 years
Int. Cl. D21—*01*
U.S. Cl. D21—149

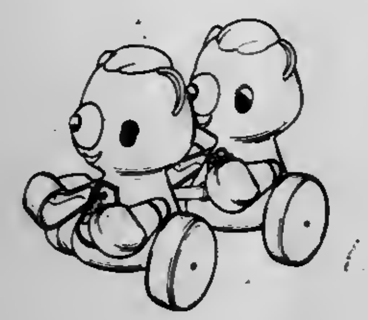

261,916
SURFBOARD FIN
Carleton R. Knox, 4130 Harbor Dr., Carlsbad, Calif. 92008
Filed Mar. 19, 1979, Ser. No. 21,845
Term of patent 14 years
Int. Cl. D21—*02*
U.S. Cl. D21—231

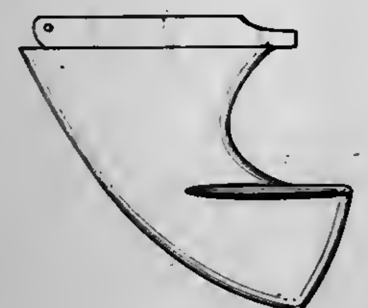

261,917
PLAYGROUND CLIMBER
Berthold B. Dieter, and Charles L. Gibson, both of Terre Haute, Ind., assignors to Creative Playgrounds Corporation, Terre Haute, Ind.
Filed Jun. 4, 1979, Ser. No. 45,305
Term of patent 14 years
Int. Cl. D21—*03*
U.S. Cl. D21—244

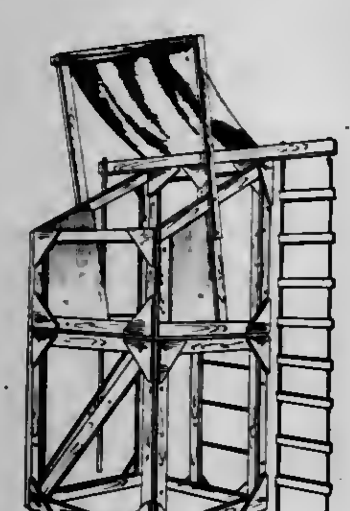

261,918
LINE GUIDE FOR FISHING ROD
Ryuichi Ohmura, 19-3, Minami-cho, Shizuoka-shi, Shizuoka-ken, Japan
Filed Oct. 10, 1979, Ser. No. 83,518
Claims priority, application Japan, May 12, 1979, 54-19269
Term of patent 14 years
Int. Cl. D22—*05*
U.S. Cl. D22—24

261,919
LINE GUIDE FOR FISHING ROD
Ryuichi Ohmura, 19-3 Minami-cho, Shizuoka-shi, Shizuoka-ken, Japan
Filed Oct. 10, 1979, Ser. No. 83,519
Claims priority, application Japan, May 12, 1979, 54-19270
Term of patent 14 years
Int. Cl. D22—*05*
U.S. Cl. D22—24

261,920
LINE GUIDE FOR FISHING ROD
Ryuichi Ohmura, 19-3, Minami-cho, Shizuoka-shi, Shizuoka-ken, Japan
Filed Oct. 10, 1979, Ser. No. 83,520
Claims priority, application Japan, Apr. 19, 1979, 54-16101
Term of patent 14 years
Int. Cl. D22—*05*
U.S. Cl. D22—24

261,921
FISHING LURE
David D. Moore, 1434 Robin Hood Dr., Dubuque, Iowa 52001
Filed Feb. 28, 1979, Ser. No. 16,337
Term of patent 14 years
Int. Cl. D22—*05*
U.S. Cl. D22—27

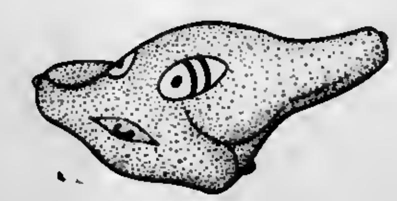

261,922
FIREPLACE INSERT STOVE
Svend Mariager, and Grace Mariager, both of Sidney, Canada, assignors to Findlay Products Division of Rexcorp Management Ltd., Kitchener, Canada
Filed Sep. 13, 1979, Ser. No. 75,207
Term of patent 14 years
Int. Cl. D23—*03*
U.S. Cl. D23—95

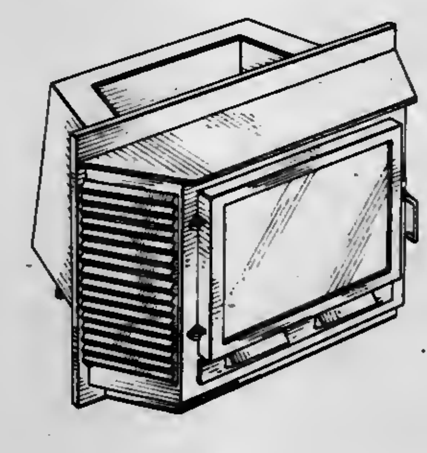

261,923
PORTABLE ELECTRIC HEATER
Henry D. Nunez, 489 Trout Lake Dr., Sanger, Calif. 93657, and Zakar Garoogian, 110 S. Fourth, No. A, Fowler, Calif. 93625
Filed Jun. 18, 1979, Ser. No. 49,071
Term of patent 14 years
Int. Cl. D23—*03*
U.S. Cl. D23—123

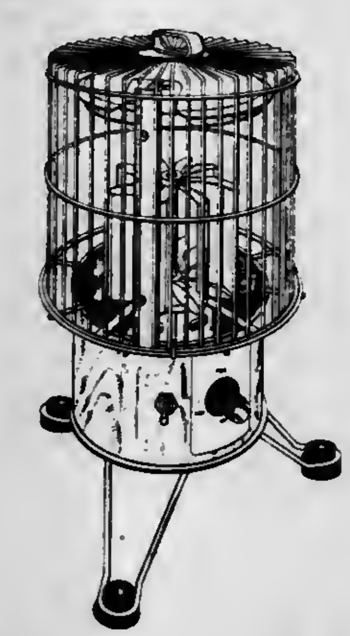

261,924
FIREBOX INTAKE HOOD
Michael J. Donohue, 5681 Reinhold St., Fair Oaks, Calif. 95628
Filed Sep. 21, 1979, Ser. No. 77,779
Term of patent 14 years
Int. Cl. D23—*03*
U.S. Cl. D23—127

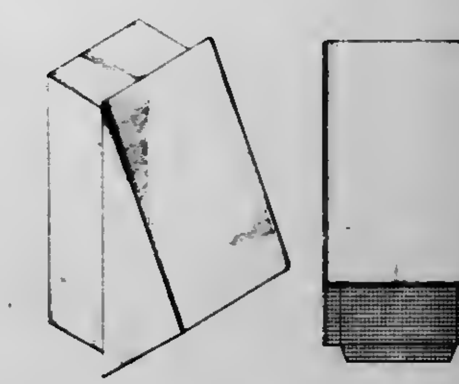

261,925
OVER-PRESSURE VALVE FOR VENTILATION
Launo Laakkonen, Helsinki, Finland, assignor to Oy Kolster Ab, Helsinki, Finland
Filed Sep. 21, 1979, Ser. No. 78,581
Claims priority, application Finland, Mar. 27, 1979, 205/79
Term of patent 14 years
Int. Cl. D23—*04*
U.S. Cl. D23—151

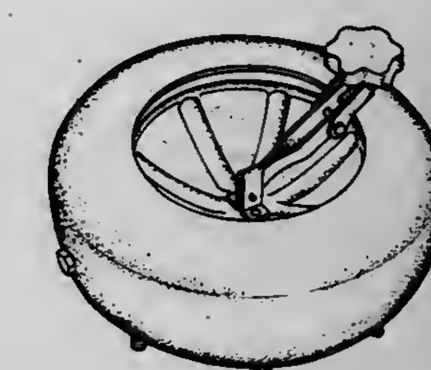

261,926
BATH TUB OF WOOD
Victor J. Tulipani, Novato, Calif., assignor to Peregrine Industries, Incorporated, San Rafael, Calif.
Filed Apr. 2, 1979, Ser. No. 26,132
Term of patent 14 years
Int. Cl. D23—*02*
U.S. Cl. D23—55 X

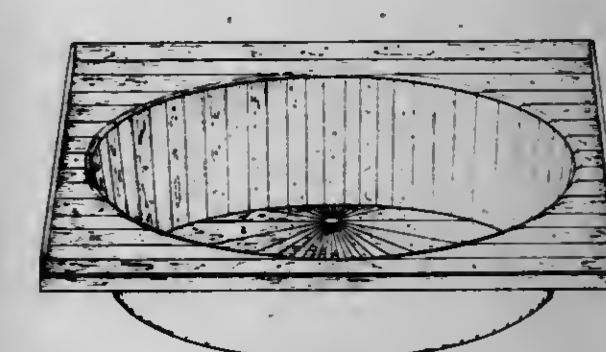

261,927
BATHTUB
James M. Sprague, 711 W. 17th, F-6, Costa Mesa, Calif. 92627
Filed Jul. 30, 1979, Ser. No. 61,706
Term of patent 14 years
Int. Cl. D23—*02*
U.S. Cl. D23—55

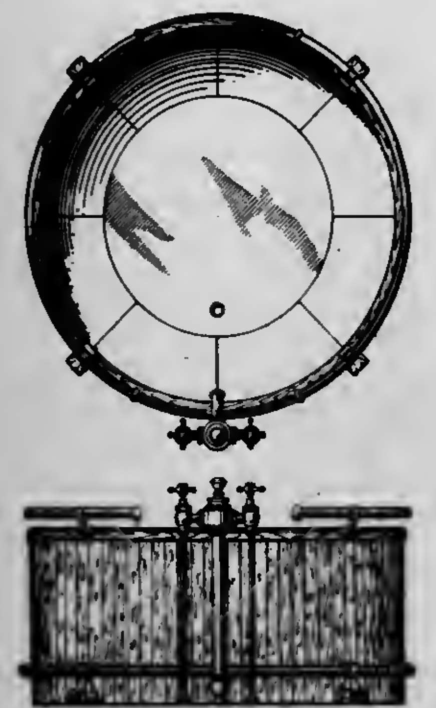

261,929
WASHSTAND
Andre Primault, Garches, France, assignor to Societe Generale de Fonderie, Paris, France
Filed Jul. 7, 1980, Ser. No. 166,708
Claims priority, application France, Jan. 4, 1980, 43071
Term of patent 14 years
Int. Cl. D23—*02*
U.S. Cl. D23—61

261,928
COMBINED WASHBASIN AND CABINET
Franco Mornaghini, Varese, Italy, assignor to Trigonal Arredamento Bagno di Mornaghini Franco & C. s.a.s., Gallarate, Italy
Filed Aug. 23, 1979, Ser. No. 69,129
Claims priority, application Italy, Feb. 28, 1979, 20924/79[U]
Term of patent 7 years
Int. Cl. D23—*02*
U.S. Cl. D23—59

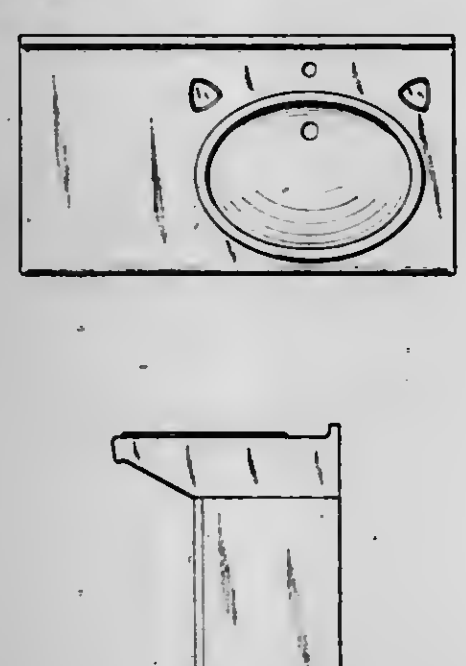

261,930
FIREPLACE GRATE AND BLOWER TUBE SURROUND ASSEMBLY WITH ELEVATED WATER HEATING HEAT EXCHANGER TUBES AND BAFFLE STRUCTURE
Byron D. Lane, Minot, N. Dak., assignor to Firemaster Systems, Inc., Minot, N. Dak.
Filed Oct. 25, 1979, Ser. No. 88,283
Term of patent 14 years
Int. Cl. D23—*03*
U.S. Cl. D23—95

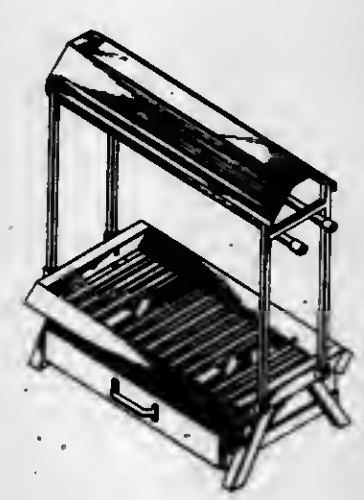

261,931
WOOD-BURNING STOVE
Hal E. Martin, Box 964, Riverside Dr., and Jimmy H. Erskine, P.O. Box 415, both of Omak, Wash. 98841
Filed Dec. 14, 1979, Ser. No. 104,174
Term of patent 14 years
Int. Cl. D23—*03*
U.S. Cl. D23—97

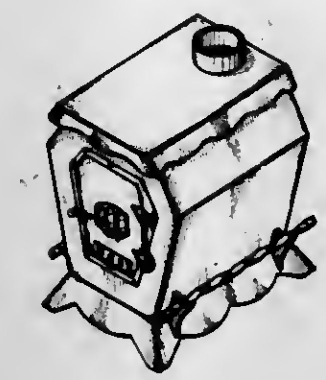

261,932
ORTHODONTIC WORK TOOL OR SIMILAR ARTICLE
Ronald L. Bussiere, 1030 Carol Way, Edmonds, Wash. 98020
Filed Sep. 13, 1979, Ser. No. 75,233
Term of patent 14 years
Int. Cl. D24—*099*
U.S. Cl. D24—10

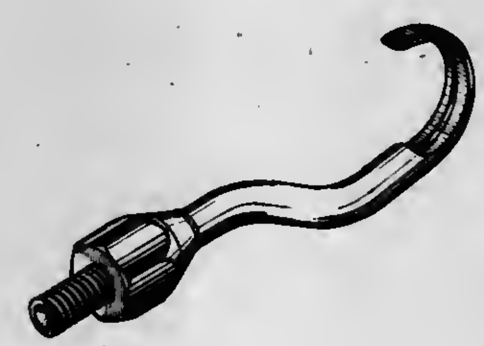

261,933
SPATULA
Daniel Smith, 601 Hoffman Ave., Williamsburg, Ohio 45176
Filed Nov. 14, 1978, Ser. No. 960,579
Term of patent 14 years
Int. Cl. D24—*02*
U.S. Cl. D24—23

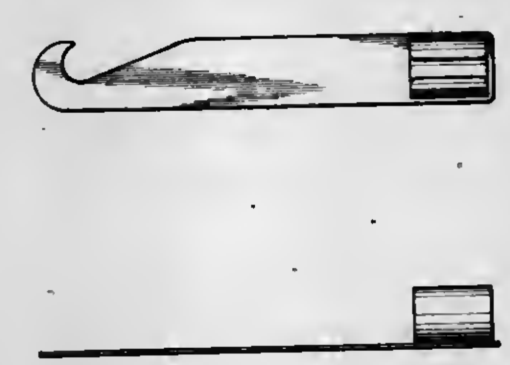

261,934
DENTAL BURR HOLDER
Don D. Porteous, 2794 Moraga Dr., Los Angeles, Calif. 90024
Filed Oct. 15, 1979, Ser. No. 85,160
Term of patent 14 years
Int. Cl. D24—*99*
U.S. Cl. D24—31

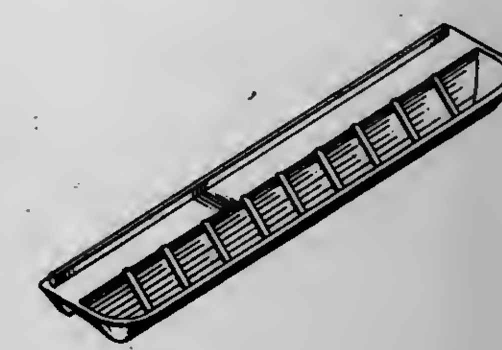

261,935
SLOTTED INTRAMEDULLARY ROD
William X. Halloran, 1965 Orange Ave., Costa Mesa, Calif. 92627
Filed Dec. 18, 1978, Ser. No. 970,319
Term of patent 14 years
Int. Cl. D24—*03*
U.S. Cl. D24—33

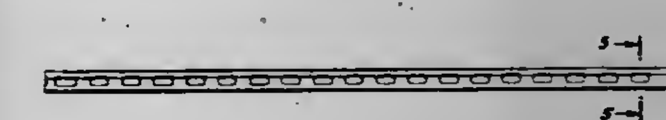

261,936
MEDICAL MAGNETIC PAD
Noriaki Sumiyasu, Tokyo, Japan, assignor to TDK Electronics Co., Ltd., Tokyo, Japan
Filed Nov. 3, 1978, Ser. No. 957,281
Claims priority, application Japan, May 10, 1978, 53-18998
Term of patent 14 years
Int. Cl. D24—*04*
U.S. Cl. D24—99

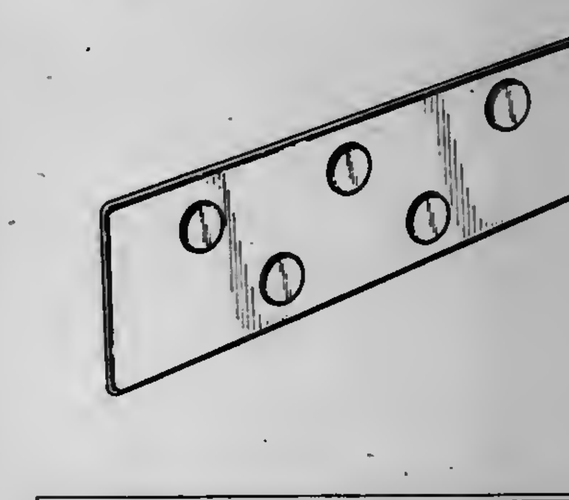

261,937
KIOSK
R. Michel Perlmutter, Aurora, Colo., assignor to Grove Foods, Inc., Aurora, Colo.
Filed Mar. 29, 1979, Ser. No. 24,907
Term of patent 14 years
Int. Cl. D25—*03*
U.S. Cl. D25—26

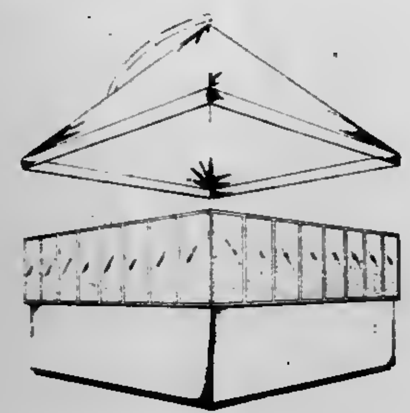

261,938
DECORATIVE LAMP BASE
Louis E. Gulick, 13416 Washburn Dr., Burnsville, Minn. 55337
Filed Apr. 16, 1979, Ser. No. 30,342
Term of patent 14 years
Int. Cl. D26—*05*
U.S. Cl. D26—110

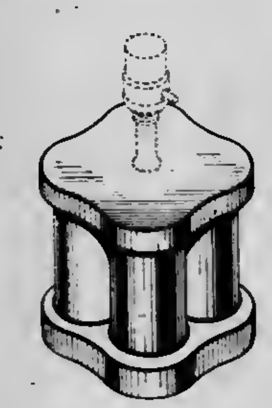

261,939
HAIR COMB
Rafael T. Nevarez, 4781 Del Rio Rd., Sacramento, Calif. 95822
Filed Apr. 17, 1980, Ser. No. 141,145
Term of patent 14 years
Int. Cl. D28—*03*
U.S. Cl. D28—21

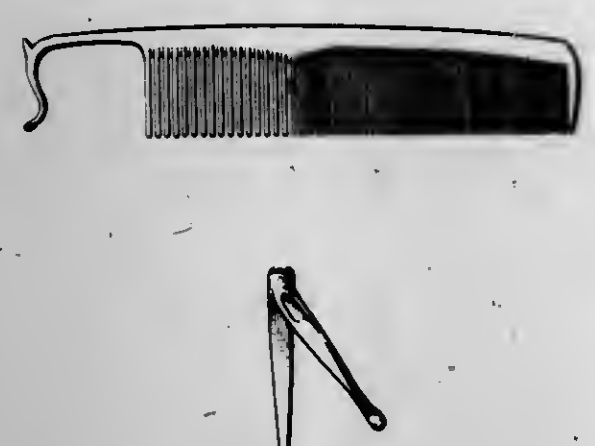

261,940
LIPSTICK CASE OR SIMILAR ARTICLE
Thomas F. Holloway, Southbury, Conn., assignor to The Risdon Manufacturing Company, Naugatuck, Conn.
Filed Jan. 21, 1980, Ser. No. 113,504
Term of patent 14 years
Int. Cl. D28—*03*
U.S. Cl. D28—88

261,941
WIG SUPPORT
Robert H. Lubin, Los Angeles County, Calif., assignor to Eva Gabor International, Los Angeles, Calif.
Filed Mar. 22, 1979, Ser. No. 22,854
Term of patent 14 years
Int. Cl. D28—*03*
U.S. Cl. D28—93

261,942
HARDHAT RESPIRATOR HOOD
Lawrence A. Sweet, Lakeland, Minn., assignor to Minnesota Mining and Manufacturing Company, St. Paul, Minn.
Filed Apr. 9, 1979, Ser. No. 28,073
The portion of the term of this patent subsequent to Aug. 29, 1992, has been disclaimed.
Term of patent 14 years
Int. Cl. D29—*02;* D02—*03*
U.S. Cl. D29—7

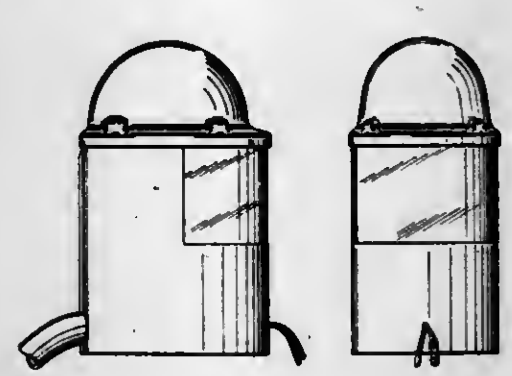

261,943
FABRIC
Rodolfo Gucci, Florence, Italy, assignor to Guccio Gucci S.r.l., Florence, Italy
Filed Jun. 13, 1979, Ser. No. 48,118
Claims priority, application Italy, Dec. 22, 1978, 54007/78[U]
Term of patent 14 years
Int. Cl. D5—*05*
U.S. Cl. D92—1 P

261,944
CARRIER FOR BOTTLES OR THE LIKE
Orison W. Stone, Middlebury, Vt., assignor to Pack Image, Inc., Middlebury, Vt.
Filed Aug. 30, 1979, Ser. No. 71,292
Term of patent 14 years
Int. Cl. D99—*99*
U.S. Cl. D9—346

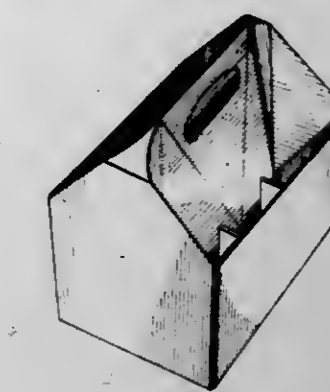

LIST OF PATENTEES

TO WHOM

PATENTS WERE ISSUED ON THE 17TH DAY OF NOVEMBER, 1981

NOTE.—Arranged in accordance with the first significant character or word of the name (in accordance with city and telephone directory practice).

Abbott Laboratories: *See*—
  Seberg, Charles H., 4,300,553, Cl. 128-214.400.
Abcor, Inc.: *See*—
  Setti, Duilio; and Balbo, Peter M., 4,301,013, Cl. 210-637.000.
Abraamov, Evgenij: *See*—
  Egert, Klaus; Heinrich, Wolfgang; Lucas, Klaus; Kuhlbrodt, Klaus-Otto; Berger, Friedrich; Gohler, Peter; Schingnitz, Manfred; Gross, Manfred; Jegorow, Aleksander; Fedotov, Vasilij; Gavrilin, Vladimir; Gudymov, Ernest; Semenov, Vladimir; Achmatov, Igol; Majdurov, Nikolaj; and Abraamov, Evgenij, 4,300,913, Cl. 48-67.000.
Abu Aktiebolag: *See*—
  Carlsson, Karl L.; and Tansson, Bertil E., 4,300,730, Cl. 242-84.20R.
Acampora, Anthony; and Reudink, Douglas O., to Bell Telephone Laboratories, Incorporated. Technique for increasing the rain margin of a TDMA satellite communication system. 4,301,533, Cl. 370-104.000.
Accortt, Joseph I.: *See*—
  Borio, Richard W.; and Accortt, Joseph I., 4,300,459, Cl. 110-263.000.
Acharya, Arun: *See*—
  Notaro, Frank; Acharya, Arun; and Kather, Kenneth C., 4,300,356, Cl. 62-50.000.
Achelpohl, Fritz; and Schneider, Horst, to Windmoller & Holscher. Apparatus for applying transverse weld seams to superposed webs of plastics film, preferably in the production of bags from webs of tubular or semi-tubular plastics. 4,300,893, Cl. 493-194.000.
Achmatov, Igol: *See*—
  Egert, Klaus; Heinrich, Wolfgang; Lucas, Klaus; Kuhlbrodt, Klaus-Otto; Berger, Friedrich; Gohler, Peter; Schingnitz, Manfred; Gross, Manfred; Jegorow, Aleksander; Fedotov, Vasilij; Gavrilin, Vladimir; Gudymov, Ernest; Semenov, Vladimir; Achmatov, Igol; Majdurov, Nikolaj; and Abraamov, Evgenij, 4,300,913, Cl. 48-67.000.
Ackermann, Peter: *See*—
  Drabek, Jozef; Ackermann, Peter; Farooq, Saleem; Gsell, Laurenz; and Kristiansen, Odd, 4,301,304, Cl. 568-637.000.
Acloque, Andre; Lanet, Jean-Claude; and Correia, Yves, to Rhone-Poulenc Industries. Preparation of oxalyl chloride. 4,301,092, Cl. 260-544.00Y.
Acme Visible Records, Inc.: *See*—
  Brownlee, Sherwood S., 4,300,809, Cl. 312-305.000.
Acrison, Incorporated: *See*—
  Ricciardi, Ronald J.; Ferrara, Angelo; and Hartmann, Joseph L., 4,301,510, Cl. 364-567.000.
Acton, Edward M.; and Mosher, Carol W., to SRI International. 3-Deamino-3-(4-morpholinyl) derivatives of daunorubicin and doxorubicin. 4,301,277, Cl. 536-17.00A.
Adachi, Yoshio: *See*—
  Otsuki, Keizo; Mochizuki, Hidetoshi; Suzuki, Akire; Adachi, Yoshio; Kosaka, Hideki; and Murakami, Gen, 4,301,464, Cl. 357-70.000.
Adam, Jean-Marie, to Ciba-Geigy Corporation. 6/7-Halogenoanthraquinone compounds, and the production and use thereof. 4,301,080, Cl. 260-371.000.
Adam, Jean-Marie, to Ciba-Geigy Corporation. Anthraquinone compounds. 4,301,082, Cl. 260-373.000.
Adams, Michael W.: *See*—
  Herwick, Dale L.; and Adams, Michael W., 4,300,371, Cl. 70-58.000.
Adhia, Bharat J.: *See*—
  de Monterey, Francis; Adhia, Bharat J.; and Johnson, David M., 4,300,954, Cl. 106-309.000.
Agence Nationale de Valorisation de la Recherche (ANVAR): *See*—
  Bach, Jean-Francois; Dardenne, Mireille; Pleau, Jean-Marie; Hamburger, Jean; Bricas, Evanghelos; Martinez, Jean; Blanot, Didier; and Auger, Genevieve, 4,301,065, Cl. 260-112.50R.
  Chanin, Gerald; and Torre, Jean-Pierre, 4,300,360, Cl. 62-514.00R.
Agfa-Gevaert Aktiengesellschaft: *See*—
  Bruck, Rolf; and Wolff, Erich, 4,301,240, Cl. 430-537.000.
  Patzold, Walter; and Czernik, Karl, 4,301,242, Cl. 430-569.000.
  Puschel, Walter; Odenwalder, Heinrich; and Ranz, Erwin, 4,301,243, Cl. 430-613.000.
Aglietti, Giancarlo: *See*—
  Canavesi, Roberto; Ligorati, Ferdinando; and Aglietti, Giancarlo, 4,301,308, Cl. 568-804.000.
Air Products and Chemicals, Inc.: *See*—
  McWhorter, Thomas E.; Kekuna, Haunani; Gabel, Brian L.; and Osmundson, Eric C., 4,300,355, Cl. 62-48.000.
Airco, Inc.: *See*—
  Jones, George D., 4,300,548, Cl. 128-204.210.
Aisan Industry Co., Ltd.: *See*—
  Takada, Shigetaka; Kasuya, Kazusato; and Watanabe, Yukihiro, 4,300,505, Cl. 123-445.000.
Ajinomoto Company, Incorporated: *See*—
  Iwashita, Yuji; and Ajisaka, Katsumi, 4,301,144, Cl. 424-78.000.
Ajisaka, Katsumi: *See*—
  Iwashita, Yuji; and Ajisaka, Katsumi, 4,301,144, Cl. 424-78.000.
Akado, Hajime: *See*—
  Sugie, Hiromichi; Akado, Hajime; Yamashita, Akira; and Nakamura, Yasuhiko, 4,300,928, Cl. 55-385.00R.
Akazawa, Toshitada: *See*—
  Yoshida, Hiroyuki; Akazawa, Toshitada; Haneda, Tadayosi; and Watanabe, Kenzi, 4,300,992, Cl. 204-242.000.
Akesson, Leif A. E.: *See*—
  Ingelstrom, Nils A.; and Akesson, Leif A. E., 4,300,952, Cl. 75-238.000.
Akhmatov, Mikhail M.: *See*—
  Mitin, Leonid A.; Fadeev, Petr Y.; Ponomarev, Leonid F.; Fadeev, Vladimir Y.; Rybert, Vyacheslav F.; Reutsky, Jury V.; Kulagin, Rim A.; Vorozheikin; Anatoly A.; Ermilov, Nikolai P.; Dimova, Lidia P.; Doskaziev, Adil G.; Korobkov, Vladlen V.; Babenko, Sergei A.; Akhmatov, Mikhail M.; Zhaksybaev, Nabi K., deceased; and Zhaksybaeva, Ekaterina S., executrix, 4,300,802, Cl. 299-64.000.
Akimoto, Fumio: *See*—
  Takumi, Shizuo; Hashimoto, Toshio; and Akimoto, Fumio, 4,301,033, Cl. 252-448.000.
Akira, Tsuzuki; and Hiroshi, Tobitani, to Koritsu Machine Industry Limited. Coke oven door cleaner. 4,300,986, Cl. 202-241.000.
Akiyama, Setsuo: *See*—
  Honda, Toshio; Ogawa, Masao; Fukuura, Yukio; Ishikawa, Hikaru; Naito, Kazuo; Akiyama, Setsuo; and Tanuma, Itsuo, 4,300,970, Cl. 156-244.110.
Akutsu, Eiichi: *See*—
  Kozima, Akio; and Akutsu, Eiicbi, 4,301,224, Cl. 430-58.000.
Akzona Incorporated: *See*—
  Bachmann, Adolf; Boehler, Joachim; and Linhart, Heinz, 4,301,101, Cl. 264-130.000.
  Zengel, Hans; Zielke, Rainer; and Bergfeld, Manfred, 4,301,257, Cl. 525-329.000.
Albany International Corp.: *See*—
  Romanski, Eric R., 4,300,982, Cl. 162-358.000.
Albarda, Scato, to Dragerwerk Aktiengesellschaft. Method and apparatus for determining the alcohol content of a person's blood. 4,300,385, Cl. 73-23.000.
Alfred University Research Foundation: *See*—
  Crandall, William B., 4,301,214, Cl. 428-446.000.
Alguire, Donald E.; Bennett, Robert; Kotulla, Norbert; and Yeung, Anthony C., to Griffith Laboratories U.S.A., Inc. Circulation system for biocidal gas. 4,301,113, Cl. 422-2.000.
Allemand, Charley D.: *See*—
  Demers, Donald R.; and Allemand, Charley D., 4,300,834, Cl. 356-316.000.
Alley, F. William, to Johnson Wax Associates. Snow ski with adjustable camber. 4,300,786, Cl. 280-602.000.
Allied Plastics, Inc.: *See*—
  Page, Cornelius D., Jr., 4,300,709, Cl. 224-275.000.
Allis-Chalmers Corporation: *See*—
  Berti, Jerome L., 4,300,493, Cl. 123-192.00B.
  Ferro, Anthony J.; and Goldman, Holliday L., 4,300,749, Cl. 251-124.000.
Almac Plastics: *See*—
  Batky, Lester; Batky, Michael P.; and Manne, Jack, 4,300,299, Cl. 40-607.000.
Alovyainikov, Alexandr A.: *See*—
  Nikandrov, Gennady A.; Alovyainikov, Alexandr A.; Varlamova, Ljudmila V.; Vulikh, Alexandr I.; Lopatin, Jury P.; Tikhomirov, Vladimir A.; Chebukhanova, Vera A.; Preobrazhensky, Pavel S.; Spiridonov, Viktor E.; Zhelonkin, Alexandr G.; and Varlamov, Rudolf P., 4,300,925, Cl. 55-242.000.
Alpha Solarco Inc.: *See*—
  Uroshevich, Miroslav, 4,300,538, Cl. 126-438.000.
Alps Electric Co., Ltd.: *See*—
  Takeuchi, Shuhei, 4,300,712, Cl. 226-157.000.
Alsthom-Atlantique: *See*—
  Baffert, Alain; Fauconnet, Michel; Gales, Christian; and Roig, Claude, 4,301,008, Cl. 210-242.300.
  Masselin, Michel, 4,301,465, Cl. 357-82.000.
Aluminum Company of America: *See*—
  Ryan, Kenneth W.; and Rogers, Elmer H., Jr., 4,301,138, Cl. 423-495.000.
Alvarez, Luis W. Color television viewer. 4,301,468, Cl. 358-64.000.

Bayer Aktiengesellschaft: *See—*

Cohnen, Wolfgang; Kleiner, Frank; and Kranz, Gerhard, 4,301,212, Cl. 428-412.000.

Mayer, Wolfram; Rudolph, Hans; De Cleur, Eckhard; and Schonfelder, Manfred, 4,301,186, Cl. 427-54.100.

Preis, Lothar; and Jehle, Dieter, 4,300,321, Cl. 52-223.00R.

Regel, Erik; Buchel, Karl H.; Haller, Ingo; and Plempel, Manfred, 4,301,166, Cl. 424-269.000.

Schieder, Rudolf; Telle, Helmut; Raue, Roderich; and Brinkwerth, Wolfgang, 4,301,091, Cl. 260-505.00R.

Suling, Carlhans; Balle, Gerhard; Leusner, Bernd; Schulz, Hans-Hermann; and Walkowiak, Michael, 4,300,886, Cl. 433-202.000.

Wagner, Kuno; Ick, Jurgen; and Balle, Gerhard, 4,301,262, Cl. 525-509.000.

Wagner, Kuno, 4,301,310, Cl. 568-863.000.

Beach, David L.; and Harrison, James J., to Gulf Research & Development Company. Process for recovering oligomerization product. 4,301,318, Cl. 585-526.000.

Beaucamp, Klaus: *See—*

Bartl, Knut; Ziegenhorn, Joachim; Wunderwald, Peter; Beaucamp, Klaus; and Lill, Helmut, 4,301,028, Cl. 252-408.000.

Beck, Vernon D.; Piggin, Bruce P.; and Uber, Arthur E., III, to International Business Machines Corp. Multiple beam cathode ray tube with apertured cathode and control grid. 4,301,389, Cl. 313-411.000.

Becker, Dale F., to Sangamo Weston, Inc. Bistable thermal actuator. 4,300,350, Cl. 60-528.000.

Becton, Dickinson and Company: *See—*

Gandi, Robert A.; and Martino, Anthony P., 4,300,550, Cl. 128-207.180.

Gyure, Sandor; and Szwarc, Joseph M., 4,300,678, Cl. 206-364.000.

Mansbach, Lillian; and McCarter, Henry, 4,300,907, Cl. 23-230.00B.

Mehl, Jack J.; and Calpin, Cyril J., 4,300,404, Cl. 73-863.520.

Beecham Group Limited: *See—*

Crowley, Patrick J., 4,301,149, Cl. 424-114.000.

Stirling, Irene; and Clarke, Brian P., 4,301,168, Cl. 424-272.000.

Behar, Albert: *See—*

Kaiser, Donald J.; Behar, Albert; and Krupicka, William A., 4,300,370, Cl. 70-54.000.

Beheim, Eric: *See—*

Morris, Earl R., 4,300,743, Cl. 248-441.00R.

Behrend, Lothar: *See—*

Knothe, Erich; Melcher, Franz-Josef; Ober, Jurgen; and Behrend, Lothar, 4,300,647, Cl. 177-212.000.

Behringwerke Aktiengesellschaft: *See—*

Bohn, Hans, 4,301,064, Cl. 260-112.00R.

Enders, Burkhard, 4,301,142, Cl. 424-8.000.

Behrmann, Alfred: *See—*

Koch, Christian; and Behrmann, Alfred, 4,300,917, Cl. 48-213.000.

Belden Corporation: *See—*

Orlandi, John F.; and Moore, Timothy J., 4,300,339, Cl. 57-58.340.

Bell Telephone Laboratories, Incorporated: *See—*

Acampora, Anthony; and Reudink, Douglas O., 4,301,533, Cl. 370-104.000.

Brown, James B.; and France, Randall W., 4,300,810, Cl. 339-74.00R.

Burrus, Charles A., Jr.; Campbell, Joe C.; Dentai, Andrew G.; and Lee, Tien P., 4,301,463, Cl. 357-30.000.

Chang, Robert P. H., 4,300,989, Cl. 204-164.000.

Favin, David L.; Lynn, Peter F.; and Snyder, Paul J., 4,301,536, Cl. 371-22.000.

Johnson, David W., Jr.; and Vogel, Eva M., 4,301,020, Cl. 252-62.620.

Kolb, Ernest D.; and Laudise, Robert A., 4,300,979, Cl. 156-623.00R.

Niehaus, William C., 4,301,188, Cl. 427-88.000.

Bellini, Francesco; and Immer, Hans U., to American Home Products Corp. Preparation of (D-Trp ^{6})-LH-RH via the heptapeptide H-Ser-Tyr-D-Trp-Leu-Arg-Pro-Gly-NH_2. 4,301,066, Cl. 260-112.5LH.

Beloit Corporation: *See—*

Dahl, Carl B.; Crouse, Jere W.; and Langdon, Roy A., 4,300,714, Cl. 226-196.000.

Bemiss, Robert P. Apparatus for decurling a continuous web. 4,300,891, Cl. 493-8.000.

Benczur-urmossy, Gabor, to Deutsche Automobilgesellschaft mbH. Bi-porous Raney-nickel electrode. 4,301,218, Cl. 429-42.000.

Bender, Reinhold H. W., to American Home Products Corporation. Process for preparing aminopenicillins. 4,301,072, Cl. 260-239.100.

Bendiberica S.A.: *See—*

Bacardit, Juan S., 4,300,594, Cl. 137-625.210.

Bendix Corporation, The: *See—*

Mayer, Endre A.; and Kelso, Charles R., 4,300,595, Cl. 137-625.330.

Reddy, Jnnuthula N., 4,300,507, Cl. 123-489.000.

Bennett, Robert: *See—*

Alguire, Donald E.; Bennett, Robert; Kotulla, Norbert; and Yeung, Anthony C., 4,301,113, Cl. 422-2.000.

Benningfield, L. V., Jr.: *See—*

Roof, Lewis B.; and Benningfield, L. V., Jr., 4,301,401, Cl. 324-61.00R.

Benno, Edward L.: *See—*

Klygis, Mindaugas J.; and Benno, Edward L., 4,300,681, Cl. 206-428.000.

Benthos, Inc.: *See—*

Raymond, Samuel O.; and Hayward, Gary G., 4,300,654, Cl. 181-120.000.

Benz-Jucker, Edith H., heir: *See—*

Jucker, Jules, deceased; Jucker-Raths, Hedwig A., heir; Benz-Jucker, Edith H., heir; Jucker, Erich J., heir; and Uhlemann-Jucker, Christina U., heir, 4,301,335, Cl. 179-84.00L.

Benzel, Alfred W., Jr. Heavy duty security lock. 4,300,793, Cl. 292-205.000.

Benzschawel, Steven J.; and Nauheimer, James F., to Container Corporation of America. Self locking folder. 4,300,679, Cl. 206-424.000.

Berbeco, George R., to Charleswater Products, Inc. Electrically conductive foam and method of preparation and use. 4,301,040, Cl. 252-511.000.

Berejka, Anthony J.; and Bradley, Richard, to Radiation Dynamics, Inc. Polybutylene and conjugated diene butyl polymer blends. 4,300,988, Cl. 204-159.200.

Berg, Charles A. Energy conservation in shower bathing. 4,300,247, Cl. 4-598.000.

Berg, Christoph: *See—*

Melcher, Franz-Josef; Berg, Christoph; and Knothe, Erich, 4,300,646, Cl. 177-212.000.

Berg, Rolf, to Assi Can Aktiebolag. Method of manufacturing cylindrical tubes and apparatus for carrying out the method. 4,300,963, Cl. 156-82.000.

Berger, Bernd; Mucke, Gert; Thies, Helmut; Neuschutz, Eberhard; and Oppermann, Heinz, to Betriebsforschungs Institut VDeh. Apparatus for measuring stress distribution across the width of flexible strip. 4,300,403, Cl. 73-862.070.

Berger, Friedrich: *See—*

Egert, Klaus; Heinrich, Wolfgang; Lucas, Klaus; Kuhlbrodt, Klaus-Otto; Berger, Friedrich; Gohler, Peter; Schingnitz, Manfred; Gross, Manfred; Jegorow, Aleksander; Fedotov, Vasilij; Gavrilin, Vladimir; Gudymov, Ernest; Semenov, Vladimir; Achmatov, Igol; Majdurov, Nikolaj; and Abraamov, Evgenij, 4,300,913, Cl. 48-67.000.

Bergfeld, Manfred: *See—*

Zengel, Hans; Zielke, Rainer; and Bergfeld, Manfred, 4,301,257, Cl. 525-329.000.

Bermas Plastics Company, Inc.: *See—*

China, David B., 4,300,610, Cl. 150-40.000.

Bernecker, Gunther, to G.M.C. Research, Inc. Device for supplying fuel to an internal combustion engine. 4,301,096, Cl. 261-41.00B.

Bernhardt, Gunther, to Dynamit Nobel AG. Method of preparing benzyl alcohols by decarbonylation of formic acid esters. 4,301,088, Cl. 260-465.00F.

Berti, Jerome L., to Allis-Chalmers Corporation. Engine balancer for a four cylinder in-line internal combustion engine. 4,300,493, Cl. 123-192.00B.

Bertin, Michale C.; and Carson, Mark A., to Nucleonic Data Systems. Chatter detection in thickness measuring gauges and the like. 4,301,366, Cl. 250-308.000.

Besecker, Kenneth H. Protective enclosure for a padlock. 4,300,369, Cl. 70-54.000.

Betensky, Ellis I., to U.S. Precision Lens Incorporated. Projection lens. 4,300,817, Cl. 350-412.000.

Betriebsforschungs Institut VDeh: *See—*

Berger, Bernd; Mucke, Gert; Thies, Helmut; Neuschutz, Eberhard; and Oppermann, Heinz, 4,300,403, Cl. 73-862.070.

Betterley, James E., to Globe Ticket Company. Ticket. 4,300,297, Cl. 40-20.00R.

Beuchat, Georges. Foot flipper device. 4,300,255, Cl. 9-309.000.

Beuchat, Roger; and Damond, Remy, to Mefina S.A. Device for transmitting signals by magnetic induction to projectile fuse. 4,300,452, Cl. 102-270.000.

Beyer, Frederick A., to Ford Motor Company. Engine cooling system air venting arrangement. 4,300,718, Cl. 236-34.500.

Bezwada, Rao S., to American Cyanamid Company. Method of adhesion of rubber to reinforcing materials. 4,300,973, Cl. 156-307.700.

BFG Glassgroup: *See—*

Quillevere, Jean C.; and Segall, Jean, 4,300,936, Cl. 65-114.000.

Biasuzzi, Patricia A.; and Ptaszek, George W. Animated toy. 4,300,307, Cl. 46-154.000.

BICC Limited: *See—*

Hutchison, John B., 4,301,325, Cl. 174-76.000.

Bickel, Hans: *See—*

Woodward, Robert B.; and Bickel, Hans, 4,301,278, Cl. 544-016.000.

Bielomatik Leuze & Co.: *See—*

Negro, Guido; and Fitzel, Reinhold, 4,300,406, Cl. 74-54.000.

Biesiadecki, Leon G.: *See—*

Keller, Patrick N.; and Biesiadecki, Leon G., 4,301,476, Cl. 358-209.000.

Bigler, Hans-Ulrich, to Werkzeugmaschinenfabrik Oerlikon-Buhrle AG. Shaped charge warhead. 4,300,453, Cl. 102-307.000.

Billings Energy Corporation: *See—*

Simons, Harold M., 4,300,946, Cl. 75-0.50B.

Binkley Company, The: *See—*

Baxter, Bobby G.; Wilbeck, Jerry L.; and Wilbeck, Wendell J., 4,300,640, Cl. 172-311.000.

Bione, Angelo A.; Sehnert, Robert J.; and Taylor, Horace E., to Marmon Company. Chord recognition system for an electronic musical instrument. 4,300,430, Cl. 84-1.010.

Biren, Marvin A.: *See—*

Boudreau, Jon P.; Biren, Marvin A.; and Maselek, Robert J., 4,300,414, Cl. 81-64.000.

Bistran, John M., Jr.; and Wright, Lawrence G., to Westinghouse Electric Corp. Acoustic flowmeter with Reynolds number compensation. 4,300,400, Cl. 73-861.280.

Black & Decker Inc.: *See—*

Rodowsky, Stanley J., Jr.; and Morgan, Donald B., 4,300,262, Cl. 15-387.000.

Blair, Bruce W., to Tektronix, Inc. Time interval meter. 4,301,360, Cl. 235-92.00T.

Blanchard, Eugene J., to United States of America, Agriculture. Dyeing of cellulose-containing textiles in glycol and glycol ether solvents. 4,300,904, Cl. 8-532.000.

Blanckmeister, Charles. Therapeutic bra. 4,300,568, Cl. 128-509.000.

Blanot, Didier: *See—*

Bach, Jean-Francois; Dardenne, Mireille; Pleau, Jean-Marie; Hamburger, Jean; Bricas, Evanghelos; Martinez, Jean; Blanot, Didier; and Auger, Genevieve, 4,301,065, Cl. 260-112.50R.

Bleisteiner, Manfred; Rittersdorf, Walter; and Wielinger, Hans, to Boehringer Mannheim GmbH. Rapid test for ascorbic acid determination. 4,300,905, Cl. 23-230.00B.

Bliss, George N. Band saw machine. 4,300,671, Cl. 198-345.000.

Bloomer, Milton D.; Harnden, John D., Jr.; and Deallenbach, Denise A., to General Electric Company. Interchangeable networks with non-linear sensors and method of producing such networks. 4,300,392, Cl. 73-362.0AR.

Blount, David H. Process for the production of poly(aldehyde aminosilicon acid) resinous products and foams. 4,301,254, Cl. 521-154.000.

Blumcke, Alfred; Fischer, Peter; and Vahlensieck, Hans-Joachim, to Dynamit Nobel AG. Silica gels incorporating insolubilized reagents. 4,301,027, Cl. 252-408.000.

Blyakharov, Ayzik; and Kagantsev, Joseph S. Can opener. 4,300,288, Cl. 30-409.000.

Bobroff, Harry. Exercise device. 4,300,760, Cl. 272-120.000.

Boden, Ogden W. Cord locks or the like resistant to tampering. 4,300,269, Cl. 24-134.00R.

Bodenseewerk Perkin-Elmer & Co., GmbH: *See—*

Schiemann, Dieter; and Witte, Wolfgang, 4,300,835, Cl. 356-334.000.

Boehler, Joachim: *See—*

Bachmann, Adolf; Boehler, Joachim; and Linhart, Heinz, 4,301,101, Cl. 264-130.000.

Boehringer Mannheim GmbH: *See—*

Bartl, Knut; Ziegenhorn, Joachim; Wunderwald, Peter; Beaucamp, Klaus; and Lill, Helmut, 4,301,028, Cl. 252-408.000.

Bleisteiner, Manfred; Rittersdorf, Walter; and Wielinger, Hans, 4,300,905, Cl. 23-230.00B.

Boeing Company, The: *See—*

Whinfrey, Thomas B., 4,300,738, Cl. 248-62.000.

Bogdanovic, Borislav, to Studiengesellschaft Kohle mbH. Alkali metal complex compounds. 4,301,081, Cl. 260-347.200.

Bogner, Richard D. Antenna employing curved parasitic end-fire directors. 4,301,457, Cl. 343-770.000.

Bohm, Louis: *See—*

Underwood, William S.; and Bohm, Louis, 4,301,060, Cl. 260-42.490.

Bohn, Hans, to Behringwerke Aktiengesellschaft. Ubiquitary tissue protein PP_8. 4,301,064, Cl. 260-112.00R.

Bohner, Beat; Rempfler, Hermann; and Schurter, Rolf, to Ciba-Geigy Corporation. Herbicidally active unsaturated esters of halogenated α-[4-(pyridyl-2'-oxy)-phenoxy]-propionic acids. 4,300,944, Cl. 71-94.000.

Bohrer, James B.; and Collins, Robert T., to National Computer Systems, Inc. Optically scannable answer sheet booklet with sequence bars printed thereon and method of producing same. 4,300,791, Cl. 283-38.000.

Bokros, Jack C., to CarboMedics, Inc. Cardiovascular grafts. 4,300,244, Cl. 3-1.400.

Bolen, Charles E.: *See—*

Marzocchi, Alfred; Roberts, Michael G.; Bolen, Charles E.; and Harrington, Edward R., 4,301,051, Cl. 260-28.5AS.

Bom, Cornelis J. G.: *See—*

van der Lely, Ary; and Bom, Cornelis J. G., 4,300,364, Cl. 64-28.00R.

Bonalumi, Pietro, to Rockwell-Rimoldi, S.p.A. Thread tension control for sewing machines. 4,300,464, Cl. 112-254.000.

Bonar Industries Inc.: *See—*

Cuthbertson, Bruce, 4,300,608, Cl. 150-12.000.

Bond, Joseph N., to Litton Systems, Inc. Toning system. 4,300,475, Cl. 118-657.000.

Bonneau, Paul-Emile, to Merck & Co., Inc. Red blood cell labelling kit. 4,300,569, Cl. 128-654.000.

Boonstra, Alexander H.; and Mutsaers, Cornelis A. H. A., to U.S. Philips Corporation. Resistance material. 4,301,042, Cl. 252-521.000.

Booth, Newell O.: *See—*

Meland, Clifford L.; and Booth, Newell O., 4,301,523, Cl. 367-123.000.

Borg-Warner Chemicals, Inc.: *See—*

Grant, Thomas S., 4,301,216, Cl. 428-476.300.

Borg-Warner Corporation: *See—*

Browne, Vance D., 4,300,669, Cl. 192-89.00B.

Fogelberg, Mark J., 4,300,667, Cl. 192-36.000.

Borio, Richard W.; and Accortt, Joseph I., to Combustion Engineering, Inc. Char binder for fluidized beds. 4,300,459, Cl. 110-263.000.

Borja, Arthur; and Van Otterdyk, Frans, to Purex Corporation. Chemical milling maskant application process. 4,301,194, Cl. 427-154.000.

Born, Richard C.: *See—*

Anderson, John A.; Born, Richard C.; Knopf, Frank A.; Sabroff, Richard R.; Schutten, Herman P.; and Van Zeeland, Donald L., 4,301,508, Cl. 364-483.000.

Bosch Siemens Hausgerate GmbH: *See—*

Eck, Walter, 4,301,093, Cl. 261-1.000.

Bosshard, Ernst: *See—*

Koch, Manfred; and Bosshard, Ernst, 4,300,727, Cl. 242-2.000.

Boston Machine Works Company: *See—*

Morin, Robert W., 4,300,472, Cl. 118-245.000.

Botsch, Franz: *See—*

Heinze, Christoph; Botsch, Franz; and Wolff, Horst, 4,301,275, Cl. 528-300.000.

Bottoms, Harry S.: *See—*

Lewis, Geoffrey A.; and Bottoms, Harry S., 4,300,919, Cl. 55-48.000.

Boucherle, Andre L.; and Viallet, Marie-Pierre D., to Institut Merieux. 2-Amino thiazoline derivatives. 4,301,167, Cl. 424-270.000.

Boudreau, Jon P.; Biren, Marvin A.; and Maselek, Robert J., to Charles Stark Draper Laboratory, Inc., The. Torque amplifier. 4,300,414, Cl. 81-64.000.

Bourke, Robert F., to Gould Inc. Thermal current limiting controller. 4,301,396, Cl. 318-490.000.

Bouygues, Jean: *See—*

Malsot, Christian; Desmurs, Roland; and Bouygues, Jean, 4,300,815, Cl. 350-96.200.

Bowen, John C., to Ametek, Inc. Solar collector with modified plumbing and array thereof. 4,300,534, Cl. 126-432.000.

Bradley, John S.: *See—*

Pruett, Roy L.; and Bradley, John S., 4,301,086, Cl. 260-438.100.

Bradley, Richard: *See—*

Berejka, Anthony J.; and Bradley, Richard, 4,300,988, Cl. 204-159.200.

Bradner, William T.: *See—*

Nettleton, Donald E., Jr.; Bush, James A.; and Bradner, William T., 4,301,248, Cl. 435-119.000.

Brady, Thomas P.; and Langer, Horst G., to Dow Chemical Company, The. Derivatives of polyphosphoric acid partial esters. 4,301,025, Cl. 252-389.00A.

Braksmayer, Diza P.; and Hussain, Syed N., to FMC Corporation. Tris-(3-hydroxyalkyl) phosphine oxide flame retardant compositions. 4,301,057, Cl. 260-37.00N.

Branson, Johnny R. Wood splitting axe. 4,300,606, Cl. 145-2.00R.

Braswell, Charles D.; and Burkett, Robert A., to Xerox Corporation. Cascade illumination and switch control console. 4,300,829, Cl. 355-14.00R.

Braun A.G.: *See—*

Majthan, Rudolf; Stuhler, Rolf; Parsonage, Raymond G.; and Packham, Charles C., 4,300,280, Cl. 29-611.000.

Breant, Claude, to Rhone-Poulenc Industries. N,N-Diethyl-2-ethylhexanamide fragrances. 4,301,021, Cl. 252-98.000.

Bremer, Robert C., Jr.: *See—*

Zinn, Michael J.; Bremer, Robert C., Jr.; Williams, Lewis E.; and Haupt, Hans O., 4,300,383, Cl. 73-11.000.

Breneiser, Dennis L.: *See—*

Johnson, Morris E.; Voorhes, William G.; and Breneiser, Dennis L., 4,300,379, Cl. 72-258.000.

Brennstoffinstitut Freiberg: *See—*

Egert, Klaus; Heinrich, Wolfgang; Lucas, Klaus; Kuhlbrodt, Klaus-Otto; Berger, Friedrich; Gohler, Peter; Schingnitz, Manfred; Gross, Manfred; Jegorow, Aleksander; Fedotov, Vasilij; Gavrilin, Vladimir; Gudymov, Ernest; Semenov, Vladimir; Achmatov, Igol; Majdurov, Nikolaj; and Abraamov, Evgenij, 4,300,913, Cl. 48-67.000.

Brest van Kempen, Carel J. H. Device and method for determining material strength in situ. 4,300,397, Cl. 73-818.000.

Bretzger, Reinhard: *See—*

Lindenthal, Hans; Armasow, Waldemar; and Bretzger, Reinhard, 4,300,361, Cl. 64-17.00R.

Bricas, Evanghelos: *See—*

Bach, Jean-Francois; Dardenne, Mireille; Pleau, Jean-Marie; Hamburger, Jean; Bricas, Evanghelos; Martinez, Jean; Blanot, Didier; and Auger, Genevieve, 4,301,065, Cl. 260-112.50R.

Bridger, William L., to Future Packaging Machinery Co., Inc. Bale bagging apparatus. 4,300,327, Cl. 53-258.000.

Bridgestone Tire Company Limited: *See—*

Hooda, Toshio; Ogawa, Masao; Fukuura, Yukio; Ishikawa, Hikaru; Naito, Kazuo; Akiyama, Setsuo; and Tanuma, Itsuo, 4,300,970, Cl. 156-244.110.

Sato, Norimoto; Miyaoka, Minoru; Yamasaki, Shin; Inoue, Kimio; Kuriyama, Akimasa; Fukui, Tsugushi; and Asai, Toshihiro, 4,300,838, Cl. 366-84.000.

Briggs, James, to Zurn, Frank. Device for measuring and indicating changes in resistance of a living body. 4,300,574, Cl. 128-734.000.

Brinkwerth, Wolfgang: *See—*

Schieder, Rudolf; Telle, Helmut; Raue, Roderich; and Brinkwerth, Wolfgang, 4,301,091, Cl. 260-505.00R.

Bristol-Myers Company: *See—*

Nettleton, Donald E., Jr.; Bush, James A.; and Bradner, William T., 4,301,248, Cl. 435-119.000.

British-American Tobacco Company Limited: *See—*

Horsewell, Henry G.; and Phelpstead, James W. P., 4,300,577, Cl. 131-334.000.

British Gas Corporation: *See—*

Davies, Haydn S.; Garstang, James H.; and Timmins, Cyril, 4,300,999, Cl. 208-212.000.

Broeksema, Egbert; and Smeets, Arnoldus A., to U.S. Philips Corporation. Method and device for manufacturing a plastics record carrier. 4,301,099, Cl. 264-25.000.

Brookfield, Helen K. Reusable baby napkin. 4,300,563, Cl. 128-287.000.

Brooks, Derrick W. Separation apparatus. 4,300,926, Cl. 55-319.000.
Brow, Arthur J. Flat shoe form tie bracket for use with concrete forms. 4,300,747, Cl. 249-217.000.
Brown Boveri Corporation: *See—*
Hochstrasser, Otto; Ruby, William S.; and Madaffore, Frank V., 4,301,320, Cl. 13-32.000.
Brown, Donald B.: *See—*
Keizer, Alan S.; and Brown, Donald B., 4,300,715, Cl. 228-180.00A.
Brown, Donald J., to Knox Manufacturing Co. Cabinet for use in abrasive blasting system. 4,300,318, Cl. 51-425.000.
Brown, James B.; and France, Randall W., to Bell Telephone Laboratories, Incorporated. Zero insertion force connector. 4,300,810, Cl. 339-74.00R.
Brown, Peter S.; and Tibbetts, Samuel H. Outboard motor with hydraulic pump and means for attaching hydraulic pump to such a motor. 4,300,872, Cl. 417-360.000.
Brown, Roger A.; Clyde, William F.; and Galusha, Glenn D., to AMFAC Foods, Inc. Cutter element. 4,300,429, Cl. 83-651.100.
Brown, Sheldon H.; Autery, William D.; Rittman, Alan H.; and Chapman, Nelson H., to Texas Instruments, Inc. System for recording information on a flexible information storage media. 4,301,486, Cl. 360-99.000.
Browne, Vance D., to Borg-Warner Corporation. Cushion finger diaphragm spring clutch. 4,300,669, Cl. 192-89.00B.
Brownlee, Sherwood S., to Acme Visible Records, Inc. Open pilaster frames for rotary storage cabinet. 4,300,809, Cl. 312-305.000.
Brownrigg, John T.: *See—*
Giering, Linda P.; and Brownrigg, John T., 4,301,372, Cl. 250-461.00R.
Bruck, Rolf; and Wolff, Erich, to Agfa-Gevaert Aktiengesellschaft. Photographic silver halide material with cross-linked particulate acrylic or methacrylic polymer. 4,301,240, Cl. 430-537.000.
Bruckert, Eugene J.; and Cooper, Morgan H., to Motorola, Inc. Apparatus for detecting possible defeat of systems for remote metering of utilities. 4,301,444, Cl. 340-870.020.
Brunner, Erich: *See—*
Deubzer, Bernward; Brunner, Erich; Wilhelm, Herman; and Sallersbeck, Konrad, 4,301,215, Cl. 428-447.000.
Brunswick Corporation: *See—*
Uphoff, John W., 4,301,103, Cl. 264-166.000.
Bryce, Ian R. Litter bin. 4,300,696, Cl. 220-18.000.
Buchel, Karl H.: *See—*
Regel, Erik; Buchel, Karl H.; Haller, Ingo; and Plempel, Manfred, 4,301,166, Cl. 424-269.000.
Bucher, Anthony J.: *See—*
DeCore, Robert A.; and Bucher, Anthony J., 4,300,779, Cl. 277-235.00B.
Buchs, Wolfgang; Muller, Martin; Malburg, Werner; and Seidel, Albert, to Messerschmitt-Boelkow-Blohm Gesellschaft mit beschraenkter Haftung. Suspension system for a low temperature tank. 4,300,354, Cl. 62-45.000.
Buckholtz, Harry E.; Moritz, Joseph J.; and Wisnouskas, Joseph S., to Hooker Chemicals & Plastics Corp. Phosphorus pentasulfide waste water treatment. 4,301,014, Cl. 210-721.000.
Buckshaw, Thomas M., to Robertshaw Controls Company. Pressure responsive control device and method of making the same. 4,300,396, Cl. 73-728.000.
Buhler, Rato R.: *See—*
Croft, George T.; and Buhler, Rato R., 4,300,317, Cl. 51-284.00E.
Builders Concrete, Inc.: *See—*
Sluys, Wesley W., 4,300,854, Cl. 405-1.000.
Buirley, William L.; Koopman, Donald E.; McQuain, David B.; and Reeves, William H., to Thermal Imagery, Inc. Thermographic cholesteric coating compositions. 4,301,054, Cl. 260-29.4UA.
Bundy Corporation: *See—*
Millar, Barry C.; and Little, Keith W., 4,300,672, Cl. 198-486.000.
Bunker Ramo Corporation: *See—*
Bailey, Donald E., 4,301,454, Cl. 343-18.00E.
Roos, John C., 4,301,537, Cl. 375-1.000.
Bunyea, John R.; Ferrill, Jess B.; Hutchinson, Ray A. J.; and Sergeant, Ronald G., to AMP Inc. Free standing insertion tool. 4,300,282, Cl. 29-751.000.
Burch, Jack A., to Jack A. Burch Ltd. Panel. 4,301,187, Cl. 427-45.100.
Burcham, Frank W., to United States of America, National Aeronautics and Space Administration. Multiple pure tone elimination strut assembly. 4,300,656, Cl. 181-214.000.
Burghardt, Wolfgang: *See—*
Bauer, Gunther; Burghardt, Wolfgang; and Moller, Hilmar, 4,300,344, Cl. 57-288.000.
Burgin, Kermit. Speculum lens structure. 4,300,541, Cl. 128-18.000.
Burke, John F., to United States of America, Army. Adjustable parallel fluidic resistor bank. 4,300,596, Cl. 137-836.000.
Burke, William B., to William Burke Associates, Inc. Basketball hoop with shield. 4,300,764, Cl. 273-1.50R.
Burkett, Robert A.: *See—*
Braswell, Charles D.; and Burkett, Robert A., 4,300,829, Cl. 355-14.00R.
Burkin, Alfred R.; and Monhemius, Andrew J., to Interox Chemicals Ltd. Extraction of pre-reduced lateritic ores with aqueous sulphuric acid in the presence of peroxidant. 4,301,125, Cl. 423-150.000.
Burns, Fredrick B.; and Shaw, Richard J., to E Z Paintr Corporation. Paint applying tool. 4,300,258, Cl. 15-210.00R.
Burns, John A., to Western Electric Co., Inc. Method for exposing substrates to X-rays. 4,301,237, Cl. 430-394.000.
Burroughs Corporation: *See—*
Balta, Justin, 4,301,345, Cl. 200-314.000.
Catiller, Robert D.; and Forbes, Brian K., 4,301,505, Cl. 364-200.000.
Peter, Emmett B., III, 4,300,758, Cl. 271-225.000.
Smoliar, Gerald D., 4,301,450, Cl. 340-715.000.
Burrus, Charles A., Jr.; Campbell, Joe C.; Dentai, Andrew G.; and Lee, Tien P., to Bell Telephone Laboratories, Incorporated. Demultiplexing photodetector. 4,301,463, Cl. 357-30.000.
Buschmann, Ernst; Zeeh, Bernd; Pommer, Ernst-Heinrich; and Goetz, Norbert, to BASF Aktiengesellschaft. N-(3-tertbutyl-chlorophenyl-2-methyl-1-propyl)-2,6-dimethyl morpholines. 4,301,284, Cl. 544-106.000.
Bush, James A.: *See—*
Nettleton, Donald E., Jr.; Bush, James A.; and Bradner, William T., 4,301,248, Cl. 435-119.000.
Busse, Claus-Adolf; and Labrande, Jean-Paul, to European Atomic Energy Community (EURATOM). Heat-pipe thermostats of high precision. 4,300,626, Cl. 165-96.000.
Buxmeyer, Walter: *See—*
Streit, Klaus; Buxmeyer, Walter; Schulzke, Peter; and Harsch, Klaus, 4,300,508, Cl. 123-490.000.
Bye, Ashley D., to Imperial Chemical Industries Limited. Transition metal composition and process. 4,301,265, Cl. 526-140.000.
Byrne, Allan B.; Otis, Richard G.; and Robinson, Stephen A., to Hughes Aircraft Company. Satellite deployment system with remotely controlled relocking capability. 4,300,737, Cl. 244-158.00R.
C. F. Doyle Limited: *See—*
Barrett, Barrie G., 4,300,366, Cl. 68-3.00R.
C. van der Lely N.V.: *See—*
van der Lely, Ary; and Bom, Cornelis J. G., 4,300,364, Cl. 64-28.00R.
California Institute of Technology: *See—*
Miller, Emmett L.; Shumka, Alex; and Gauthier, Michael K., 4,301,409, Cl. 324-158.00D.
Calomiris, Thomas J., to United States of America, Army. Parasitic capacitance compensation in CMOS-switched active filter. 4,301,419, Cl. 330-107.000.
Calpin, Cyril J.: *See—*
Mehl, Jack J.; and Calpin, Cyril J., 4,300,404, Cl. 73-863.520.
Calviello, Joseph A., to Eaton Corporation. Beam lead Schottky barrier diode for operation at millimeter and submillimeter wave frequencies. 4,301,233, Cl. 430-314.000.
Camacho, Hector. Casting collar for dental impression tray. 4,300,884, Cl. 433-74.000.
Camos, Walter M.; and Doize, William L. Well Christmas tree guard apparatus. 4,300,373, Cl. 70-232.000.
Campbell, Barry, to R. A. Pearson Company. Holder assembly for case packing machine. 4,300,325, Cl. 53-143.000.
Campbell, Joe C.: *See—*
Burrus, Charles A., Jr.; Campbell, Joe C.; Dentai, Andrew G.; and Lee, Tien P., 4,301,463, Cl. 357-30.000.
Campbell, Robert W., to Phillips Petroleum Company. Aromatic sulfide/sulfone polymer production. 4,301,274, Cl. 528-388.000.
Canadian Appliance Manufacturing Company Limited: *See—*
Gladysz, Victor, 4,300,293, Cl. 34-108.000.
Canadian Liquid Air Ltd./Air Liquide Canada Ltee.: *See—*
Savard, Guy; Lee, Robert G. H.; and Hornsey, Derek, 4,301,007, Cl. 210-96.100.
Canavesi, Roberto; Ligorati, Ferdinando; and Aglietti, Giancarlo, to Societe Italiana Resine S.I.R. S.p.A. Process for the preparation of o-cresol and 2,6-xylenol. 4,301,308, Cl. 568-804.000.
Cannon, Raymond E., to Imed Corporation. Apparatus for controlling the flow of intravenous fluid to a patient. 4,300,552, Cl. 128-214.00E.
Canon Inc.: *See—*
Tokuda, Ryuji; and Andresen, Bernhard H., 4,300,824, Cl. 354-25.000.
Canon Kabushiki Kaisha: *See—*
Asano, Toshiaki, 4,301,461, Cl. 357-17.000.
Sakane, Toshio; Hosoe, Kazuya; Kinoshita, Takao; Tsunekawa, Tokuichi; and Kawabata, Takashi, 4,301,478, Cl. 358-227.000.
Suzuki, Akiyoshi; Hiraga, Ryozo; and Yoshinari, Hideki, 4,301,363, Cl. 250-216.000.
Cao, Chung Van; and Ward, Phillip W., to Texas Instruments Incorporated. Seismic source array firing controller. 4,300,653, Cl. 181-107.000.
Capella Inc.: *See—*
Georgiev, Georgi D., 4,300,874, Cl. 418-54.000.
Caplan, David M., to AMF Incorporated. Inflatable aquatic exerciser. 4,300,759, Cl. 272-116.000.
CarboMedics, Inc.: *See—*
Bokros, Jack C., 4,300,244, Cl. 3-1.400.
Cardiac Pacemakers, Inc.: *See—*
Carlson, Scott W., 4,301,405, Cl. 324-78.00D.
Stiodt, Richard E.; and Wright, Thomas C., 4,300,566, Cl. 128-419.0PG.
Carenco, Alain. Method for balancing an integrated optical device and a device obtained by means of said method. 4,300,814, Cl. 350-96.120.
Carl Freudenberg, Firma: *See—*
Fottinger, Walter; Tecl, Bohuslav; and Fahrbach, Erich, 4,300,968, Cl. 156-181.000.
Carl Heyer GmbH Inhalationstechnik: *See—*
Kruber, H. W., 4,300,546, Cl. 128-200.160.
Carlsen, John S., to Raychem Corporation. Easily removable heat recoverable closure. 4,300,328, Cl. 53-492.000.
Carlson, Harold C. Clam belly extractor. 4,300,264, Cl. 17-51.000.
Carlson, Richard L.; and Davidson, Allen L., to Motorola, Inc. Complex RF weighter. 4,301,432, Cl. 333-164.000.

Carlson, Scott W., to Cardiac Pacemakers, Inc. Interval-to-rate converter. 4,301,405, Cl. 324-78.00D.
Carlsson, Karl L.; and Tansson, Bertil E., to Abu Aktiebolag. Disengageable locking mechanism in a fishing reel. 4,300,730, Cl. 242-84.20R.
Carrier Corporation: *See—*
Gray, Kenneth P., 4,300,540, Cl. 126-452.000.
Carriere, David B.; and Lauzon, Rodrigue V., to NL Industries, Inc. Borehole drilling fluid and method. 4,301,016, Cl. 252-8.50C.
Carrillo, Robert M.: *See—*
Whitemore, Christopher E.; and Carrillo, Robert M., 4,300,978, Cl. 156-581.000.
Carruth, Grant F.; Pellegrin, Michael T.; Felch, Russell R.; and Atkinson, Donald R., to Owens-Corning Fiberglas Corporation. Method for forming glass fibers. 4,300,929, Cl. 65-2.000.
Carson, Mark A.: *See—*
Bertin, Michale C.; and Carson, Mark A., 4,301,366, Cl. 250-308.000.
Carstens, Jerry E., to Procter & Gamble Company, The. Layered paper having a soft and smooth velutinous surface, and method of making such paper. 4,300,981, Cl. 162-109.000.
Carter, Larry E.; and Ashby, Robert M., to American Telecommunications Corporation. Capacitor ratio multiplier. 4,301,501, Cl. 363-62.000.
Cary, Boyd, to Parmatic Filter Corporation. Method for removing moisture particles. 4,300,918, Cl. 55-1.000.
Casio Computer Co., Ltd.: *See—*
Shimizu, Tomohiro; and Muranaga, Yoshinobu, 4,301,511, Cl. 364-709.000.
Cassella Aktiengesellschaft: *See—*
Engelhardt, Friedrich; Keil, Karl-Heinz; Weckler, Gerhard; and Sternberger, Klaus, 4,300,903, Cl. 8-531.000.
Castonguay, Roger N.; and Jencks, Charles L., to General Electric Company. Circuit breaker condition indicator apparatus. 4,301,342, Cl. 200-153.0SC.
Castonguay, Roger N.; and Jencks, Charles L., to General Electric Company. Circuit breaker trip latch assembly. 4,301,346, Cl. 200-320.000.
Castonguay, Roger N.; and Jencks, Charles L., to General Electric Company. Circuit breaker electrical closure control apparatus. 4,301,433, Cl. 335-13.000.
Castonguay, Roger N., to General Electric Company. Undervoltage release reset and lockout apparatus. 4,301,434, Cl. 335-20.000.
Castonguay, Roger N.; and McCrin, Jon P., to General Electric Company. Flux shifter reset assembly. 4,301,435, Cl. 335-26.000.
Castonguay, Roger N.; and Jencks, Charles L., to General Electric Company. Circuit breaker hook apparatus. 4,301,436, Cl. 335-166.000.
Catano, Paul S.; and McDonald, Malvyn C., to United States of America, Navy. Position interlock system for submarine masts and closure. 4,300,468, Cl. 114-340.000.
Caterpillar Tractor Co.: *See—*
Lockhart, David A., 4,300,273, Cl. 29-156.40R.
Ringel, Reginald K[illegible]00,775, Cl. 277-34.300.
Catiller, Robert D.; and Forbes, Brian K., to Burroughs Corporation. Microprocessor having word and byte handling. 4,301,505, Cl. 364-200.000.
Caunt, Anthony D.; and Gavens, Paul D., to Imperial Chemical Industries Limited. Olefin polymerization catalyst and the production and use thereof. 4,301,029, Cl. 252-429.00B.
CBS Inc.: *See—*
Schmoll, George F., III, 4,300,435, Cl. 84-1.190.
Celanese Corporation: *See—*
Horlenko, Theodore; Paul, James L.; and Gordon, James W., 4,301,298, Cl. 560-218.000.
Centre de Recherches Metallurgiques-Centrum voor Research in de Metallurgiques: *See—*
Wilmotte, Stephan H., 4,300,376, Cl. 72-201.000.
Centre Scientifique et Technique de l'Industrie Textile Belge, en abrege: "Centexbel": *See—*
Santens, Lieven J. M. E.; and Vander Beke, Robert M., 4,300,251, Cl. 8-149.100.
Cereal Enterprises, Inc.: *See—*
Giguere, R. James, 4,301,183, Cl. 426-482.000.
Cereda, Enzo: *See—*
Pala, Gianfranco; and Cereda, Enzo, 4,301,177, Cl. 424-319.000.
Cervik, Joseph: *See—*
Sainato, Albert; Cervik, Joseph; and Prosser, Leonard J., Jr., 4,300,631, Cl. 166-187.000.
Cestari, Joseph E. Antiseptic skin cream. 4,301,145, Cl. 424-80.000.
Chalifour, Henri R.: *See—*
Goldman, Mark B.; Kintigh, Dana W.; and Chalifour, Henri R., 4,301,429, Cl. 333-22.00R.
Champion International Corporation: *See—*
Roccaforte, Harry, 4,300,683, Cl. 206-485.000.
Champlin, Charles L., to Packaging Corporation of America. Article carrier. 4,300,680, Cl. 206-427.000.
Chang, Ching T., to United States of America, Navy. Minimum dispersion at 1.55 μm for single-mode step-index optical fibers. 4,300,930, Cl. 65-3.110.
Chang, Eugene Y. C., to American Cyanamid Company. Curative for castable polyurethanes. 4,301,270, Cl. 528-64.000.
Chang, Henry M., to Container Dynamics, Inc. Closable food container body and utensil enclosing cover assembly. 4,300,700, Cl. 220-257.000.
Chang, Robert P. H., to Bell Telephone Laboratories, Incorporated. Fluorine enhanced plasma growth of native layers on silicon. 4,300,989, Cl. 204-164.000.
Chanin, Gerald; and Torre, Jean-Pierre, to Agence Nationale de Valorisation de la Recherche (ANVAR). Small-size hermetic helium 3 refrigeration stage. 4,300,360, Cl. 62-514.00R.
Chapman, Nelson H.: *See—*
Brown, Sheldon H.; Autery, William D.; Rittman, Alan H.; and Chapman, Nelson H., 4,301,486, Cl. 360-99.000.
Chapman, Paul W., to Sanders Associates, Inc. Aquaculture rearing system. 4,300,477, Cl. 119-2.000.
Charles Stark Draper Laboratory, Inc., The: *See—*
Boudreau, Jon P.; Biren, Marvin A.; and Maselek, Robert J., 4,300,414, Cl. 81-64.000.
Charleswater Products, Inc.: *See—*
Berbeco, George R., 4,301,040, Cl. 252-511.000.
Chaudhuri, Ajit K., to American Cyanamid Company. Adhesion of textile cords to rubber by dip coating using an N-methylol group containing polymer. 4,300,964, Cl. 156-110.00A.
Chebukhanova, Vera A.: *See—*
Nikandrov, Gennady A.; Alovyainikov, Alexandr A.; Varlamova, Ljudmila V.; Vulikh, Alexandr I.; Lopatin, Jury P.; Tikhomirov, Vladimir A.; Chebukhanova, Vera A.; Preobrazhensky, Pavel S.; Spiridonov, Viktor E.; Zhelonkin, Alexandr G.; and Varlamov, Rudolf P., 4,300,925, Cl. 55-242.000.
Checkley, Peter E., to Pandrol Limited. Apparatus and a method for use in making a railway rail-fastening clip. 4,300,380, Cl. 72-306.000.
Chemical Dynamics Sweden AB: *See—*
Wiberger, Lars I.; Ronnow, Peter H.; Tengblad, Per F.; and Hellman, Bert G. H., 4,300,632, Cl. 166-246.000.
Chemische Fabrik Kalk GmbH: *See—*
Neukirchen, Ernst; and Kerscher, Utto, 4,301,058, Cl. 260-40.00R.
Chemische Werke Lowi GmbH: *See—*
Muller, Rolf; Hartmann, Werner; and Kuca, Zdenek, 4,301,311, Cl. 568-719.000.
Chen, Michael J.: *See—*
Feder, Harold M.; and Chen, Michael J., 4,301,312, Cl. 568-902.000.
Chevron Research Company: *See—*
Kuehler, Christopher W., 4,300,996, Cl. 208-10.000.
Chiba, Masao; and Fujishiro, Takeshi, to Nissan Motor Company, Limited. Air-fuel ratio detecting apparatus. 4,300,991, Cl. 204-195.00S.
Childress, David L.; and Hayes, William V., to Dow Chemical Company, The. Dehydration catalyst for making ethylenimine. 4,301,036, Cl. 252-458.000.
China, David B., to Bermas Plastics Company, Inc. Card-like holder. 4,300,610, Cl. 150-40.000.
Chorosevic, Jerome J., to Plumbium Manufacturing Corporation. Adhesive vehicle wheel weight and method. 4,300,803, Cl. 301-5.00B.
Christensen, Burton G.; and DiNinno, Frank P., to Merck & Co., Inc. 6-(1'-Hydroxyethyl)-2-substituted-pen-2-em-3-carboxylic acid. 4,301,074, Cl. 260-245.20R.
Christie, George A.: *See—*
Kluge, Arthur F.; Strosberg, Arthur M.; Whiting, Roger; and Christie, George A., 4,301,171, Cl. 424-273.00B.
Chrysler Corporation: *See—*
Lang, Jerome G., 4,300,511, Cl. 123-520.000.
Chugai Seiyaku Kabushiki Kaisha: *See—*
Oi, Nobuhiro; Aoki, Bunya; Shinozaki, Teizo; Moro, Kanji; Matsunaga, Isao; Noto, Takao; Nebashi, Toshiyuki; Harada, Yusuke; Endo, Hisao; Kimura, Takao; Okazaki, Hiroshi; Ogawa, Haruki; and Shindo, Minoru, 4,301,161, Cl. 424-246.000.
Ciba-Geigy Corporation: *See—*
Adam, Jean-Marie, 4,301,080, Cl. 260-371.000.
Adam, Jean-Marie, 4,301,082, Cl. 260-373.000.
Bohner, Beat; Rempfler, Hermann; and Schurter, Rolf, 4,300,944, Cl. 71-94.000.
Drabek, Jozef; Ackermann, Peter; Farooq, Saleem; Gsell, Laurenz; and Kristiansen, Odd, 4,301,304, Cl. 568-637.000.
Lohmann, Dieter; Roth, Martin; and Baumann, Marcus, 4,301,075, Cl. 260-326.5FM.
Putzar, Roland; and Fierz, Hans, 4,300,900, Cl. 8-524.000.
Rasberger, Michael, 4,301,061, Cl. 260-45.80N.
Rohringer, Peter; and Wegmuller, Hans, 4,301,217, Cl. 428-528.000.
Scartazzini, Riccardo, 4,301,279, Cl. 544-016.000.
Wehner, Wolfgang; and Kostler, Hans-Gunter, 4,301,085, Cl. 260-429.700.
Woodward, Robert B.; and Bickel, Hans, 4,301,278, Cl. 544-016.000.
Yates, Brian L.; and Clark, Malcolm C., 4,300,901, Cl. 8-527.000.
Cidinge Limited: *See—*
de la Haye, Robert; Matthews, John A; Potton, Malcolm J.; and Cook, Steven P., 4,300,850, Cl. 403-245.000.
Cilley, William A.: *See—*
Wentler, George E.; McGrady, Joseph; Gosselink, Eugene P.; and Cilley, William A., 4,301,044, Cl. 252-545.000.
Clampitt, Richard L., to Phillips Petroleum Company. Foamable compositions and formations treatment. 4,300,634, Cl. 166-272.000.
Clarion Co., Ltd.: *See—*
Tanaka, Koichi; and Amazawa, Kiyoshi, 4,301,541, Cl. 455-221.000.
Clark Equipment Company: *See—*
Redzinski, Gilbert E.; Pinne, Donald N., Jr.; and Den Bleyker, Joseph R., 4,300,652, Cl. 180-336.000.
Clark, K. Warren: *See—*
Witzel, Frank; Puglia, Wayne J.; Clark, K. Warren; and Mackay, Donald A. M., 4,301,178, Cl. 426-5.000.

Clark, Malcolm C.: *See—*
Yates, Brian L.; and Clark, Malcolm C., 4,300,901, Cl. 8-527.000.
Clark, Norman O., to English Clays Lovering Pochin & Company, Ltd. Pressure filters. 4,300,277, Cl. 29-450.000.
Clark, Peter J., to United Kingdom of Great Britain and Northern Ireland, The Secretary of State for Energy in Her Britannic Majesty's Government of the. Underwater structural joints. 4,300,852, Cl. 403-385.000.
Clark-Reliance Corporation, The: *See—*
Balazs, Les G., 4,300,719, Cl. 236-53.000.
Clark, William H. Insulation. 4,300,322, Cl. 52-406.000.
Clarke, Brian P.: *See—*
Stirling, Irene; and Clarke, Brian P., 4,301,168, Cl. 424-272.000.
Clarke, James W.: *See—*
Parsons, Derek A.; and Clarke, James W., 4,301,015, Cl. 210-777.000.
Clemen, Rainer; Gschwendtner, Joerg; and Haug, Werner, to International Business Machines Corporation. TTL-Compatible address latch with field effect transistors. 4,301,381, Cl. 307-475.000.
Cleveland, Joseph J.; Newman, Ray L.; and Mingos, William L. Insulated housing for ceramic heat recuperators and assembly. 4,300,627, Cl. 165-137.000.
Clinocon International GmbH: *See—*
Rebbe, Klaus; Rosicke, Berd; and Wellmann, Klaus, 4,300,573, Cl. 128-686.000.
Closet Systems Corp.: *See—*
Kashden, R. Paul, 4,300,741, Cl. 248-289.100.
Clyde, William F.: *See—*
Brown, Roger A.; Clyde, William F.; and Galusha, Glenn D., 4,300,429, Cl. 83-651.100.
Coal Industry (Patents) Limited: *See—*
Parsons, Derek A.; and Clarke, James W., 4,301,015, Cl. 210-777.000.
Coates, Clarence A., Jr.: *See—*
Weaver, Max A.; and Coates, Clarence A., Jr., 4,301,069, Cl. 260-152.000.
Cobbs, Walter H., Jr.; and Rehman, William R., to Nordson Corporation. Apparatus and method for dispensing foamable compositions. 4,301,119, Cl. 422-133.000.
Coburn, Michael D.: *See—*
Stinecipher, Mary M.; and Coburn, Michael D., 4,300,962, Cl. 149-47.000.
Cohlman, Donald C.; and Schroeder, Daniel R., to Motorola, Inc. Dual rate bi-directional switch. 4,301,378, Cl. 307-115.000.
Cohnen, Wolfgang; Kleiner, Frank; and Kranz, Gerhard, to Bayer Aktiengesellschaft. Scratch-resistant and weather-resistant laminates based on polycarbonate. 4,301,212, Cl. 428-412.000.
Coleman, Denis; and Siegman, Edwin J., to American Cyanamid Company. Process for spinning poly(polymethylene terephthalamide) fiber. 4,301,105, Cl. 264-205.000.
Coleman, Denis; and Siegman, Edwin J., to American Cyanamid Company. Spinning process for nylon 4 fiber. 4,301,106, Cl. 264-205.000.
Colescott, Robert L.: *See—*
Kaiser, Emil; and Colescott, Robert L., 4,301,045, Cl. 260-8.000.
Colgate-Palmolive Company: *See—*
Barberio, Giacinto G., 4,301,143, Cl. 424-57.000.
Gray, Frederick W., 4,300,897, Cl. 8-111.000.
Collins, Robert T.: *See—*
Bohrer, James B.; and Collins, Robert T., 4,300,791, Cl. 283-38.000.
Combustion Engineering, Inc.: *See—*
Borio, Richard W.; and Accortt, Joseph I., 4,300,459, Cl. 110-263.000.
Comparato, Joseph R.; Hartman, Ernest L.; Zielinski, Edward A.; and Myrick, David T., 4,300,458, Cl. 110-263.000.
Gaines, Albert L., 4,301,384, Cl. 310-11.000.
Goodstine, Stephen L.; and Rader, Philip C., 4,301,127, Cl. 423-242.000.
Moore, Richard F., 4,300,457, Cl. 110-171.000.
Shotwell, Kenneth E.; and Gaines, Albert L., 4,301,385, Cl. 310-11.000.
Compagnie Generale des Matieres Nucleaires: *See—*
Gruet, Michel; Lafforgue, Paul; and Michel, Pierre, 4,301,123, Cl. 423-20.000.
Compagnie Industrielle des Telecommunications Cit-Alcatel: *See—*
Desombre, Patrice; and Steun, Jean-Pierre, 4,301,538, Cl. 375-4.000.
Comparato, Joseph R.; Hartman, Ernest L.; Zielinski, Edward A.; and Myrick, David T., to Combustion Engineering, Inc. Apparatus for supporting a perforated plate air distributor for a fluidized bed. 4,300,458, Cl. 110-263.000.
Concast AG: *See—*
Wolf, Manfred, 4,300,620, Cl. 164-452.000.
Conley, William J.: *See—*
Wilkins, Dale E.; and Conley, William J., 4,300,462, Cl. 111-34.000.
Connelly, Jerald L. Safety tire having pneumatic tire superimposed on annular cushion. 4,300,613, Cl. 152-159.000.
Connor, Herbert G., to Imperial Chemical Industries Limited. Coloration process. 4,300,902, Cl. 8-529.000.
Container Corporation of America: *See—*
Benzschawel, Steven J.; and Nauheimer, James F., 4,300,679, Cl. 206-424.000.
Gardner, Jeffrey M.; and Nelson, Bennie C., Jr., 4,300,687, Cl. 206-279.000.
Container Dynamics, Inc.: *See—*
Chang, Henry M., 4,300,700, Cl. 220-257.000.
Contois, Lawrence E.; and Rule, Norman G., to Eastman Kodak Company. Crystallization inhibiting mixtures of arylmethane photoconductors. 4,301,226, Cl. 430-72.000.
Control Data Canada, Ltd.: *See—*
Harman, Robert K.; and Maki, Melvin, 4,300,338, Cl. 57-3.000.
Cook, Don E.; and Cook, Dorothy M. Water filter. 4,301,009, Cl. 210-278.000.
Cook, Dorothy M.: *See—*
Cook, Don E.; and Cook, Dorothy M., 4,301,009, Cl. 210-278.000.
Cook, Kenneth J.: *See—*
Keith, Everette R.; Cook, Kenneth J.; Power, Joseph S.; and Ruszala, Frederick B., 4,301,512, Cl. 364-801.000.
Cook, Steven P.: *See—*
de la Haye, Robert; Matthews, John A; Potton, Malcolm J.; and Cook, Steven P., 4,300,850, Cl. 403-245.000.
Cooley Incorporated: *See—*
McCusker, Joseph H.; and Siener, Philip R., Jr., 4,301,204, Cl. 428-110.000.
Cooper, Glenn D.; and Katchman, Arthur, to General Electric Company. Compositions of a polyphenylene ether resin and an aromatic alkenyl resin that is modified by rubber particles in the form of bundles of rubber fibers of rubber sheets. 4,301,059, Cl. 260-42.180.
Cooper, Morgan H.: *See—*
Bruckert, Eugene J.; and Cooper, Morgan H., 4,301,444, Cl. 340-870.020.
Corfield, John R.; Johnson, Derek; and Taylor, Clifford G., to Lilly Industries Limited. Preparation of 3-substituted cephalosporins. 4,301,280, Cl. 544-016.000.
Cormier, Raymond G.; and Guiguizian, Jacques, to Nashua Corporation. Sheet removal assembly. 4,300,830, Cl. 355-3.0SH.
Cornell-Dubilier Electric Corporation: *See—*
Journey, J. Craig, 4,301,397, Cl. 318-625.000.
Corning Glass Works: *See—*
Lachman, Irwin M., 4,300,953, Cl. 501-112.000.
Correia, Yves: *See—*
Acloque, Andre; Lanet, Jean-Claude; and Correia, Yves, 4,301,092, Cl. 260-544.00Y.
Cotton, Incorporated: *See—*
Winch, Allen R.; and Jones, Joseph K., 4,300,267, Cl. 19-200.000.
Courtaulds Limited: *See—*
Robinson, Frank, 4,300,365, Cl. 66-176.000.
Cox, Charles E.; and Eeckhout, Roger V., to SCM Corporation. Pump chambers minimizing formation of deposits. 4,300,870, Cl. 417-53.000.
Coyle, Charles F., to Paccar Inc. Exhaust gas scrubber for internal combustion engines. 4,300,924, Cl. 55-210.000.
Crandall, William B., to Alfred University Research Foundation. Low thermal expansion ceramic and process. 4,301,214, Cl. 428-446.000.
Creusot-Loire: *See—*
Malbrunot, Pierre, 4,300,837, Cl. 366-25.000.
Croft, George T.; and Buhler, Rato R., to American Optical Corporation. Method of fitting ophthalmic lenses in spectacles frames. 4,300,317, Cl. 51-284.00E.
Croissant, Robert E. Vehicular anti-theft device. 4,301,442, Cl. 340-64.000.
Crouse, Jere W.: *See—*
Dahl, Carl B.; Crouse, Jere W.; and Langdon, Roy A., 4,300,714, Cl. 226-196.000.
Crowley, Patrick J., to Beecham Group Limited. Pharmaceutical compositions. 4,301,149, Cl. 424-114.000.
Cser, Gyula, to Autoipari Kutato Intezet. Resonator conduit system for introducing intake gases in internal combustion engines. 4,300,488, Cl. 123-52.00M.
Cumming, Richard J.; DeBano, John; Sajewski, Vincent F.; Zens, John F.; and Gardella, William A., to General Motors Corporation. Method of making L-shaped inflatable restraint cushion. 4,300,894, Cl. 493-210.000.
Cunningham, Douglas J., to B.S.G. International Limited. Vehicle occupant restraint system. 4,300,799, Cl. 297-487.000.
Curtis, Harold D. Method for providing auxiliary cooling and aerating of liquids to supplement or replace fixed cooling towers. 4,301,097, Cl. 261-109.000.
Cuscurida, Michael; Dominguez, Richard J. G.; and Rice, Doris M., to Texaco Inc. Rim elastomers with improved heat distortion and tear properties. 4,301,110, Cl. 264-328.140.
Cuthbertson, Bruce, to Bonar Industries Inc. Self-raising strap loop. 4,300,608, Cl. 150-12.000.
Cutler, Scott E.: *See—*
Haase, Michael A.; Miller, Edward B.; Eichelberger, Charles W.; Cutler, Scott E.; and Wojnarowski, Robert J., 4,301,509, Cl. 364-557.000.
Cycles Peugeot: *See—*
Perrin, Marc, 4,300,489, Cl. 123-73.0AD.
Cyjkio-Gesellschaft Emil Hoffmann: *See—*
Wehr, Hubert, 4,300,976, Cl. 156-502.000.
Czernik, Karl: *See—*
Patzold, Walter; and Czernik, Karl, 4,301,242, Cl. 430-569.000.
Czyz, Jerzy: *See—*
Kiedik, Maciej; Kolt, Jozef; Czyz, Jerzy; Grzywa, Edward; Niezgoda, Anna; and Terelak, Kazimierz, 4,301,305, Cl. 568-727.000.
Daeschner, John C., to Garrett Corporation, The. Relief valve. 4,300,587, Cl. 137-117.000.
Daftary, Shashikumar H.: *See—*
Streetman, William E.; and Daftary, Shashikumar H., 4,301,104, Cl. 264-168.000.

Dahl, Carl B.; Crouse, Jere W.; and Langdon, Roy A., to Beloit Corporation. Method and apparatus for silencing of webs. 4,300,714, Cl. 226-196.000.
Dailey Oil Tools, Inc.: *See—*
Lawrence, James D., 4,300,636, Cl. 166-334.000.
Daimler-Benz Aktiengesellschaft: *See—*
Heckel, Johann, 4,300,349, Cl. 60-39.51R.
Kopf, Wolfgang, 4,300,407, Cl. 74-493.000.
Dalle Donne, Mario; Dorner, Stefan; and Schumacber, Gustav, to Kernforschungszentrum Karlsruhe. Method and arrangement for reducing the radiation exposure risks in the course of a nuclear reactor core melt down accident. 4,300,983, Cl. 376-280.000.
Damond, Remy: *See—*
Beuchat, Roger; and Damond, Remy, 4,300,452, Cl. 102-270.000.
Damox Laboratories, Inc.: *See—*
Danos, Michael, 4,301,472, Cl. 358-163.000.
Danchak, Nicholas, Jr.; Saxinger, Allan L.; Gray, Roger M.; and Kockler, Barry C., to Xerox Corporation. In-feed paper buckle control apparatus. 4,300,756, Cl. 271-8.00R.
Danos, Michael, to Damox Laboratories, Inc. Video display system witb shading circuit for selectively varying intensity of video display. 4,301,472, Cl. 358-163.000.
Dardenne, Mireille: *See—*
Bach, Jean-Francois; Dardenne, Mireille; Pleau, Jean-Marie; Hamburger, Jean; Bricas, Evanghelos; Martinez, Jean; Blanot, Didier; and Auger, Genevieve, 4,301,065, Cl. 260-112.50R.
Davet, Richard F., to Ringo Manufacturing Co. Inc. Anti-theft finger ring display device. 4,300,674, Cl. 206-45.140.
David, Roger J. P.: *See—*
Lande, Maurice A.; and David, Roger J. P., 4,300,362, Cl. 64-17.00R.
Davidson, Allen L.: *See—*
Carlson, Richard L.; and Davidson, Allen L., 4,301,432, Cl. 333-164.000.
Davies, Glyndwr J., to Glacier Metal Co., Ltd., The. Steel backing bearing blank with bonded ceramic layer, coating of polyarylene sulphide thereon and method of making. 4,301,213, Cl. 428-419.000.
Davies, Haydn S.; Garstang, James H.; and Timmins, Cyril, to British Gas Corporation. Gas oil purification. 4,300,999, Cl. 208-212.000.
Davis, Johnny L. Flexible pipe inserter. 4,300,276, Cl. 29-234.000.
Davis, Murray A. Ship-borne oil dispersant procedure and apparatus. 4,301,006, Cl. 210-96.100.
Davis, Thomas A. Solar panel mount. 4,300,537, Cl. 126-437.000.
Day, Charles E., to American Air Filter Company, Inc. Pocket filter arrangement. 4,300,927, Cl. 55-378.000.
de la Haye, Robert; Matthews, John A; Potton, Malcolm J.; and Cook, Steven P., to Cidinge Limited. Joining. 4,300,850, Cl. 403-245.000.
Deallenbach, Denise A.: *See—*
Bloomer, Milton D.; Harnden, John D., Jr.; and Deallenbach, Denise A., 4,300,392, Cl. 73-362.0AR.
DeBano, John: *See—*
Cumming, Richard J.; DeBano, John; Sajewski, Vincent F.; Zens, John F.; and Gardella, William A., 4,300,894, Cl. 493-210.000.
DEC International, Inc.: *See—*
Hazen, Gretz L., 4,300,445, Cl. 99-458.000.
Hazen, Gretz L., 4,300,446, Cl. 99-461.000.
De Cleur, Eckhard: *See—*
Mayer, Wolfram; Rudolph, Hans; De Cleur, Eckhard; and Schonfelder, Manfred, 4,301,186, Cl. 427-34.100.
DeCore, Robert A.; and Bucher, Anthony J., to Felt Products Mfg. Co. Wicking-resistant gasket assembly. 4,300,779, Cl. 277-235.00B.
Decoto Aircraft, Inc.: *See—*
Helm, James D.; and Gellerson, Walter G., 4,300,664, Cl. 188-265.000.
Deere & Company: *See—*
Anderson, Sidney E., 4,300,333, Cl. 56-14.500.
Anderson, Sidney E., 4,300,335, Cl. 56-119.000.
Degen, Hans-Juergen; and Naarmann, Herbert, to BASF Aktiengesellschaft. Addition polymers of dimorpholone compounds and diamines. 4,301,272, Cl. 528-183.000.
Degnan, William G.; and Selleck, Robert A., to United Technologies Corporation. Ballistic tolerant bydraulic control actuator and method of fabricating same. 4,300,439, Cl. 92-146.000.
Deguchi, Ryuichi: *See—*
Nakanishi, Kiyoshi; Okumura, Takeshi; Deguchi, Ryuichi; and Tanahashi, Toshio, 4,300,499, Cl. 123-307.000.
DeHaven, Robert J. Hook for a measuring tape. 4,300,289, Cl. 33-137.00R.
Dekan, Howard L.: *See—*
Goldfarb, Adolph E.; and Dekan, Howard L., 4,300,762, Cl. 273-1.0GC.
Delaney, Bennie F. Foldable and height adjustable overhead lift. 4,300,751, Cl. 254-2.00R.
Delay, Duane M., Sr., to Gould Inc. Dust cover assembly for quick disconnect coupling. 4,300,597, Cl. 138-89.000.
Delcoustal, Jean-Marie: *See—*
Thuries, Edmond; Delcoustal, Jean-Marie; and Pascal, Jacques, 4,300,586, Cl. 137-110.000.
Deleris, Robert; and Lepretre, Bernard, to Regie Nationale des Usines Renault. Process and system for computation and adjustment of optimum ignition advance. 4,300,503, Cl. 123-425.000.
Delgado, Jesus; and Spector, George. Safe knob. 4,300,525, Cl. 126-42.000.
Delle-Alsthom: *See—*
Thuries, Edmond; Delcoustal, Jean-Marie; and Pascal, Jacques, 4,300,586, Cl. 137-110.000.
DeMag Aktiengesellschaft: *See—*
Kinkel, Karl, 4,300,641, Cl. 173-12.000.
Demers, Donald R.; and Allemand, Charley D., to Baird Corporation. Inductively coupled plasma atomic fluorescence spectrometer. 4,300,834, Cl. 356-316.000.
Demko, David J. Racing pigeon cage. 4,300,479, Cl. 119-15.600.
de Monterey, Francis; Adhia, Bharat J.; and Johnson, David M., to BASF Wyandotte Corporation. Flushing process for pigments. 4,300,954, Cl. 106-309.000.
den Best, Jan: *See—*
Rooze, Antonius J.; den Best, Jan; and Melman, Gerard J., 4,300,616, Cl. 164-124.000.
Den Bleyker, Joseph R.: *See—*
Redzinski, Gilbert E.; Pinne, Donald N., Jr.; and Den Bleyker, Joseph R., 4,300,652, Cl. 180-336.000.
Dennison Manufacturing Company: *See—*
Bauer, Fritz E., 4,300,974, Cl. 156-360.000.
Scott, Robert J., 4,300,975, Cl. 156-456.000.
Dentai, Andrew G.: *See—*
Burrus, Charles A., Jr.; Campbell, Joe C.; Dentai, Andrew G.; and Lee, Tien P., 4,301,463, Cl. 357-30.000.
Deric, J. Mark: *See—*
Schoenmann, Charles F.; and Deric, J. Mark, 4,300,660, Cl. 187-29.00R.
DeRocco, Paul. Pitch extractor circuit. 4,300,431, Cl. 84-1.010.
Desarno, James G. Storm umbrella. 4,300,582, Cl. 135-20.00R.
Desjardins, J. C. Guy. Wallpapering apparatus. 4,300,471, Cl. 118-235.000.
Desmurs, Roland: *See—*
Malsot, Christian; Desmurs, Roland; and Bouygues, Jean, 4,300,815, Cl. 350-96.200.
Desombre, Patrice; and Steun, Jean-Pierre, to Compagnie Industrielle des Telecommunications Cit-Alcatel. Remote surveillance and fault location unit for pulse regenerator repeaters. 4,301,538, Cl. 375-4.000.
Despreaux, Carl; Narwid, Thomas A.; Palleroni, Norberto J.; and Uskokovic, Milan R., to Hoffmann-La Roche Inc. Process for chenodeoxycholic acid production. 4,301,246, Cl. 435-58.000.
De Steur, Hubert, to Siemens Aktiengesellschaft. Circuit arrangement for amperometric titration. 4,301,413, Cl. 324-438.000.
DeTorre, Robert P., to PPG Industries, Inc. Method of and apparatus for scoring a coated substrate. 4,300,934, Cl. 65-60.100.
Deubzer, Bernward; Brunner, Erich; Wilhelm, Herman; and Sallersbeck, Konrad, to Wacker-Chemie GmbH. Process for the preparation of impregnated wood. 4,301,215, Cl. 428-447.000.
Deutsch, Ralph, to Kawai Musical Instrument Mfg. Co., Ltd. Polyphonic tone synthesizer with loudness spectral variation. 4,300,432, Cl. 84-1.010.
Deutsch, Ralph, to Kawai Musical Instrument Mfg. Co., Ltd. Apparatus for tone generation with combined loudness and formant spectral variation. 4,300,434, Cl. 84-1.190.
Deutsche Automobilgesellschaft mbH: *See—*
Benczur-urmossy, Gabor, 4,301,218, Cl. 429-42.000.
Deutscbe Forschungs- und Versuchsanstalt fur Luft- und Raumfahrt e.V.: *See—*
Lindner, Friedrich, 4,300,622, Cl. 165-1.000.
Deutsche Gold- und Silber-Scheideanstalt vormals Roessler: *See—*
Eiermann, Kurt, 4,300,391, Cl. 73-204.000.
Deutsche Telephonwerke und Kabelindustrie Aktiengesellschaft: *See—*
Mnting, Frank, 4,301,336, Cl. 179-170.0NC.
Dia-Sert Corp.: *See—*
Rudel, Harry W., 4,300,544, Cl. 128-127.000.
Diamant Boart: *See—*
Lambot, Honore J., 4,300,643, Cl. 175-244.000.
Dickens, Robert E. Wire container for returnable beverage cans. 4,300,697, Cl. 220-19.000.
Dicks, Robert H. Baseboard distribution hot air heating system. 4,300,441, Cl. 98-40.00C.
Diesel Kiki Co., Ltd.: *See—*
Hara, Toshizo; and Yamada, Tsutomu, 4,300,491, Cl. 123-179.0BG.
Dietz, Wolfgang F. W., to RCA Corporation. Horizontal deflection circuit and power supply with regulation by horizontal output transistor turn-off delay control. 4,301,394, Cl. 315-408.000.
Digital Switch Corporation: *See—*
Genter, Roland E., 4,301,534, Cl. 370-105.000.
Dijet Industrial Co., Ltd.: *See—*
Yada, Hiroshi, 4,300,862, Cl. 407-53.000.
Dimeff, John. Flow measuring needle and orifice for flow meter. 4,300,402, Cl. 73-861.540.
Dimetrics, Inc.: *See—*
Kimbrough, Andrew G.; Rothermel, Ronald R.; and Viri, Donald P., 4,301,355, Cl. 219-137.0PS.
Dimova, Lidia P.: *See—*
Mitin, Leonid A.; Fadeev, Petr Y.; Ponomarev, Leonid F.; Fadeev, Vladimir Y.; Rybert, Vyacheslav F.; Reutsky, Jnry V.; Kulagin, Rim A.; Vorozheikin, Anatoly A.; Ermilov, Nikolai P.; Dimova, Lidia P.; Doskaziev, Adil O.; Korobkov, Vladlen V.; Babenko, Sergei A.; Akhmatov, Mikhail M.; Zhaksybaev, Nabi K., deceased; and Zhaksybaeva, Ekaterina S., executrix, 4,300,802, Cl. 299-64.000.
DiNinno, Frank P.: *See—*
Christensen, Burton G.; and DiNinno, Frank P., 4,301,074, Cl. 260-245.20R.
Dittrich, Sebastian, to Magnetic Weather Stripping Corp. Threshold with magnetic weather stripping. 4,300,314, Cl. 49-470.000.
Divisek, Jiri; and Mergel, Jurgen, to Kernforschungsanlage Julich Gesellschaft mit Beschrankter Haftung. Method of making a porous

nickel electrode for alkaline electrolysis processes and resulting product. 4,300,993, Cl. 204-290.00R.
Dobson, Michael J., to Ecosol Materials, Inc. Solar collector. 4,300,539, Cl. 126-448.000.
Dr. Ing. h.c.F. Porsche AG: *See—*
Anhegger, Sigmund, 4,300,699, Cl. 220-86.00R.
Doize, William L.: *See—*
Camos, Walter M.; and Doize, William L., 4,300,373, Cl. 70-232.000.
Dold, Werner: *See—*
Hessberg, Sigfried; and Dold, Werner, 4,300,554, Cl. 128-218.00A.
Dominguez, Richard J. G.: *See—*
Cuscurida, Michael; Dominguez, Richard J. G.; and Rice, Doris M., 4,301,110, Cl. 264-328.140.
Dominion Engineering Works Limited: *See—*
Vadas, Robert M.; and Shaver, Marvin B., 4,300,292, Cl. 34-108.000.
Don Kremer Lincoln-Mercury, Inc.: *See—*
Henry, Roger J., 4,300,849, Cl. 403-11.000.
Donan, David C., Jr., to Waiamea Company, Inc. Dual diameter bushing/seal for mine roof bolt. 4,300,859, Cl. 405-259.000.
Donnelly, Frank. Pipe assembly. 4,300,792, Cl. 285-112.000.
Dorais, Mark V., to Federal Screw Works. Voice synthesizer. 4,301,328, Cl. 179-1.0SA.
Dorner, Stefan: *See—*
Dalle Donne, Mario; Dorner, Stefan; and Schumacher, Gustav, 4,300,983, Cl. 376-280.000.
Doskaziev, Adil G.: *See—*
Mitin, Leonid A.; Fadeev, Petr Y.; Ponomarev, Leonid F.; Fadeev, Vladimir Y.; Rybert, Vyacheslav F.; Reutsky, Jury V.; Kulagin, Rim A.; Vorozheikin, Anatoly A.; Ermilov, Nikolai P.; Dimova, Lidia P.; Doskaziev, Adil G.; Korobkov, Vladlen V.; Babenko, Sergei A.; Akhmatov, Mikhail M.; Zhaksybaev, Nabi K., deceased; and Zhaksybaeva, Ekaterina S., executrix, 4,300,802, Cl. 299-64.000.
Dow Chemical Company, The: *See—*
Brady, Thomas P.; and Langer, Horst G., 4,301,025, Cl. 252-389.00A.
Childress, David L.; and Hayes, William V., 4,301,036, Cl. 252-458.000.
Griffith, Jeffrey D., 4,300,940, Cl. 71-27.000.
Hefner, Robert E., Jr., 4,301,004, Cl. 209-166.000.
Larson, Larry L., 4,301,154, Cl. 424-200.000.
Larson, Larry L., 4,301,155, Cl. 424-200.000.
Larson, Larry L., 4,301,156, Cl. 424-200.000.
Drabek, Jozef; Ackermann, Peter; Farooq, Saleem; Gsell, Laurenz; and Kristiansen, Odd, to Ciba-Geigy Corporation. 3-Phenoxy-α-(1',2'-dibromovinyl)-benxyl alcohol. 4,301,304, Cl. 568-637.000.
Dragerwerk Aktiengesellschaft: *See—*
Albarda, Scato, 4,300,385, Cl. 73-23.000.
Pannwitz, Karl-Heinz, 4,300,910, Cl. 23-232.00R.
Pasternack, Adalbert, 4,300,547, Cl. 128-202.260.
Wiesner, Peter; and Heim, Ulrich, 4,300,384, Cl. 73-23.000.
Dreyer, Dieter: *See—*
Goldmann, Wolf; Michaelsen, Dieter; Dreyer, Dieter; Holsiepe, Dietmar; Tiggesbaumker, Peter; Bauer, Klaus; Durr, Manfred; and Mersmann, Heinz G., 4,300,879, Cl. 432-14.000.
Driggers & Associates, Inc.: *See—*
Driggers, Vernon J., 4,300,502, Cl. 123-389.000.
Driggers, Vernon J., to Driggers & Associates, Inc. Fuel flow control system for internal combustion engines. 4,300,502, Cl. 123-389.000.
Du Bois, R. Clark; and Hamma, John, to Gradco-Dendoki, Inc. Continuous form feeder. 4,300,710, Cl. 226-74.000.
Duembgen, Gerd; Voelkl, Erfried; and Pforr, Gerhard, to BASF Aktiengesellschaft. Process for destroying phosgene. 4,301,126, Cl. 423-240.000.
Dulian, Robert J.: *See—*
Skoli, Sigmund P.; Dulian, Robert J.; and Kemp, David M., 4,300,923, Cl. 55-196.000.
Dumage, Laurence C.: *See—*
Seliger, Robert L.; and Dumage, Laurence C., 4,301,391, Cl. 315-111.310.
Dumas, Bernard J. L.: *See—*
Royer, Alain L. A.; Roques, Jean-Claude B.; and Dumas, Bernard J. L., 4,300,598, Cl. 138-177.000.
Dumas Seed Company: *See—*
Schmidt, Edward D., 4,301,179, Cl. 426-19.000.
Dunsmoor, Forrest L., to Peachtree Doors, Inc. Closure fastener. 4,300,794, Cl. 292-247.000.
Du Pont de Nemours, E. I., and Company: *See—*
Fernstrom, George A.; Hebeler, Harold H.; Lin, Perry H.; and Moneymaker, Robert R., 4,301,102, Cl. 264-151.000.
Miller, Conrad E., 4,301,239, Cl. 430-510.000.
Potter, Jerry F., 4,300,422, Cl. 83-99.000.
Schwing, Gregory W.; and Woods, Thomas S., 4,301,286, Cl. 544-211.000.
Durant, Graham J.; and Ganellin, Charon R., to Smith Kline & French Laboratories Limited. Pharmacologically active compounds. 4,301,165, Cl. 424-269.000.
Durr, Manfred: *See—*
Goldmann, Wolf; Michaelsen, Dieter; Dreyer, Dieter; Holsiepe, Dietmar; Tiggesbaumker, Peter; Bauer, Klaus; Durr, Manfred; and Mersmann, Heinz G., 4,300,879, Cl. 432-14.000.
Dusanek, Norman. Woofer loudspeaker. 4,301,332, Cl. 179-1.00E.
Dutra, Gerard A.; and Sikorski, James A., to Monsanto Company. Ester derivatives of N-arylthio-N-phosphonomethylglycinonitrile. 4,300,943, Cl. 71-87.000.
Dworkin, Eugene. Snap-in soap dish liner for bathroom fixtures. 4,300,248, Cl. 4-628.000.
Dynamit Nobel AG: *See—*
Bernhardt, Gunther, 4,301,088, Cl. 260-465.00F.
Blumcke, Alfred; Fischer, Peter; and Vahlensieck, Hans-Joachim, 4,301,027, Cl. 252-408.000.
Dynasciences Corporation: *See—*
Lindsay, Gene; and O'Beirne, Andrew J., 4,301,245, Cl. 435-4.000.
E Z Paintr Corporation: *See—*
Burns, Fredrick B.; and Shaw, Richard J., 4,300,258, Cl. 15-210.00R.
Earle, John L. Automatic headlight switch. 4,301,390, Cl. 315-82.000.
Eastman Kodak Company: *See—*
Contois, Lawrence E.; and Rule, Norman G., 4,301,226, Cl. 430-72.000.
Giles, Ralph R.; and Weaver, Max A., 4,301,068, Cl. 260-152.000.
Giles, Ralph R.; and Weaver, Max A., 4,301,070, Cl. 260-155.000.
Giles, Ralph R.; and Weaver, Max A., 4,301,071, Cl. 260-158.000.
O'Neill, George J.; and Rothwell, Allan R., 4,300,580, Cl. 132-7.000.
Weaver, Max A.; and Coates, Clarence A., Jr., 4,301,069, Cl. 260-152.000.
Eaton Corp.: *See—*
Anderson, John A.; Born, Richard C.; Knopf, Frank A.; Sabroff, Richard R.; Schutten, Herman P.; and Van Zeeland, Donald L., 4,301,508, Cl. 364-483.000.
Bart, Hansueli, 4,300,492, Cl. 123-188.0AA.
Calviello, Joseph A., 4,301,233, Cl. 430-314.000.
Echo, Incorporated: *See—*
Miyata, Hiromasa, 4,300,336, Cl. 56-295.000.
Eck, Walter, to Bosch Siemens Hausgerate GmbH. Atomizer for liquid. 4,301,093, Cl. 261-1.000.
Eckenhoff, James B.; and Landrau, Felix A., to ALZA Corporation. Self-driven fluid dispenser. 4,300,558, Cl. 128-260.000.
Eckert, Alton B.: *See—*
Soderberg, John H.; Eckert, Alton B.; and McFiggans, Robert B., 4,301,507, Cl. 364-464.000.
Ecosol Materials, Inc.: *See—*
Dobson, Michael J., 4,300,539, Cl. 126-448.000.
Eddleman, Roy T.; and Moran, Gregory F., to Spectrum Medical Industries, Inc. Vacuum filter. 4,301,010, Cl. 210-406.000.
Eddleman, Roy T.; and Moran, Gregory F., to Spectrum Medical Industries, Inc. Protein concentrator. 4,301,118, Cl. 422-101.000.
Edwards, John V.: *See—*
Steer, Peter L.; and Edwards, John V., 4,300,560, Cl. 128-283.000.
Edwards, Joseph H. Cold weather face mask. 4,300,240, Cl. 2-206.000.
Eeckhout, Roger V.: *See—*
Cox, Charles E.; and Eeckhout, Roger V., 4,300,870, Cl. 417-53.000.
Efros, Boris, to Energenic Propulsions, Ltd. Efficient, versatile oscillating pedal cycle. 4,300,784, Cl. 280-255.000.
Egert, Klaus; Heinrich, Wolfgang; Lucas, Klaus; Kuhlbrodt, Klaus-Otto; Berger, Friedrich; Gohler, Peter; Schingnitz, Manfred; Gross, Manfred; Jegorow, Aleksander; Fedotov, Vasilij; Gavrilin, Vladimir; Gudymov, Ernest; Semenov, Vladimir; Achmatov, Igol; Majdurov, Nikolaj; and Abraamov, Evgenij, to Brennstoffinstitut Freiberg; and Gosudarstwennyi Nautschno Issledowatelskij I Projektnyi Institut Asotnoj Promuschlennosti I Produktow Organitschekogo Sintesa. Apparatus and method for the manufacture of product gas. 4,300,913, Cl. 48-67.000.
Ehrat, Kurt. Apparatus for the production and display of moving pictures. 4,300,298, Cl. 40-430.000.
Eichelberger, Charles W.: *See—*
Haase, Michael A.; Miller, Edward B.; Eichelberger, Charles W.; Cutler, Scott E.; and Wojnarowski, Robert J., 4,301,509, Cl. 364-557.000.
Eiermann, Kurt, to Deutsche Gold- und Silber-Scheideanstalt vormals Roessler. Hot wire anemometer for measuring the flow velocity of gases and liquids (II). 4,300,391, Cl. 73-204.000.
Eifuku, Yoshiaki; Mimura, Kazunobu; and Okada, Yasuyuki, to Hitachi, Ltd. Data processor for processing at one time data including X bytes and Y bits. 4,301,514, Cl. 364-900.000.
Eigyo, Masami: *See—*
Ogata, Masaru; Matsumoto, Hiroshi; Hirose, Katsumi; and Eigyo, Masami, 4,301,159, Cl. 424-230.000.
Eisai Co., Ltd.: *See—*
Yamanaka, Motosuke; Saito, Isao; Yamatsu, Kiyomi; and Fujimoto, Takako, 4,301,169, Cl. 424-273.00R.
Eisele, John F.: *See—*
Mercer, Elizabeth A.; and Eisele, John F., 4,301,195, Cl. 427-261.000.
El-Trol, Inc.: *See—*
Highsmith, James L., Jr., 4,300,342, Cl. 57-81.000.
Electro Materials Corp. of America: *See—*
Johnson, Gary W.; and Hilson, David G., 4,301,439, Cl. 338-195.000.
Eli Lilly and Company: *See—*
Katner, Allen S., 4,301,282, Cl. 544-90.000.
Marshall, Winston S.; and Pfeifer, William, 4,301,313, Cl. 570-128.000.
Elin-Union Aktiengesellschaft: *See—*
Preininger, Gustav, 4,301,437, Cl. 336-60.000.

Ellsworth, William C., to NCR Corporation. Bubble memory storage unit. 4,301,516, Cl. 365-15.000.
Elsasser, Stephanie. Safety device for child-proof gas stove. 4,300,524, Cl. 126-39.00R.
Emanuelson, Roger C.; Luoma, Warren L.; and Taylor, William A., to United Technologies Corporation. Separator plate for electrochemical cells. 4,301,222, Cl. 429-251.000.
Emerson Electric Co.: *See—*
McElroy, Jerry W., 4,301,438, Cl. 337-339.000.
Emil Wohlhaupter & Co.: *See—*
Wohlhaupter, Gerhard, 4,300,271, Cl. 29-1.00A.
Enders, Burkhard, to Behringwerke Aktiengesellschaft, DEX. Method and reagent for the detection of infectious mononucleosis and preparation thereof. 4,301,142, Cl. 424-8.000.
Endo, Hisao: *See—*
Oi, Nobuhiro; Aoki, Bunya; Shinozaki, Teizo; Moro, Kanji; Matsunaga, Isao; Noto, Takao; Nebashi, Toshiyuki; Harada, Yusuke; Endo, Hisao; Kimura, Takao; Okazaki, Hiroshi; Ogawa, Haruki; and Shindo, Minoru, 4,301,161, Cl. 424-246.000.
Endo, Saijiro, to Kai Cutlery Center Co., Ltd. Safety razor with blade cleaning means. 4,300,285, Cl. 30-41.000.
Energenic Propulsions, Ltd.: *See—*
Efros, Boris, 4,300,784, Cl. 280-255.000.
Engelhardt, Friedrich; Keil, Karl-Heinz; Weckler, Gerhard; and Sternberger, Klaus, to Cassella Aktiengesellschaft. Padding auxiliaries and processes for dyeing cellulose fibers or mixtures of cellulose fibers and synthetic fibers with sulphur dyestuffs, sulphur vat dyestuffs, vat dyestuffs and reactive dyestuffs. 4,300,903, Cl. 8-531.000.
English Card Clothing Company Limited, The: *See—*
Grimshaw, Keith; and Ennis, Brian J., 4,300,266, Cl. 19-113.000.
English Clays Lovering Pochin & Company, Ltd.: *See—*
Clark, Norman O., 4,300,277, Cl. 29-450.000.
Lofthouse, Charles H., 4,301,001, Cl. 209-17.000.
English, David C.: *See—*
Sly, Eugene L.; and English, David C., 4,300,645, Cl. 177-211.000.
Ennis, Brian J.: *See—*
Grimshaw, Keith; and Ennis, Brian J., 4,300,266, Cl. 19-113.000.
Enterprises International Inc.: *See—*
Lamb, Frank H.; Lefcort, Malcolm D.; and Rada, Petr, 4,300,460, Cl. 110-346.000.
Environmental Research Institute of Michigan: *See—*
Sternberg, Stanley R.; and Lougheed, Robert M., 4,301,443, Cl. 340-146.3MA.
Ermilov, Nikolai P.: *See—*
Mitin, Leonid A.; Fadeev, Petr Y.; Ponomarev, Leonid F.; Fadeev, Vladimir Y.; Rybert, Vyacheslav F.; Reutsky, Jury V.; Kulagin, Rim A.; Vorozheikin, Anatoly A.; Ermilov, Nikolai P.; Dimova, Lidia P.; Doskaziev, Adil G.; Korobkov, Vladlen V.; Babenko, Sergei A.; Akhmatov, Mikhail M.; Zhaksybaev, Nabi K., deceased; and Zhaksybaeva, Ekaterina S., executrix, 4,300,802, Cl. 299-64.000.
Essilor International Cie Generale d'Optique: *See—*
Mignen, Bernard, 4,300,821, Cl. 351-163.000.
Estel Hoogovens BV: *See—*
Rooze, Antonius J.; den Best, Jan; and Melman, Gerard J., 4,300,616, Cl. 164-124.000.
Ettenberg, Michael; and Nuese, Charles J., to RCA Corporation. III-V Direct-bandgap semiconductor optical filter. 4,300,811, Cl. 350-1.100.
European Atomic Energy Community (EURATOM): *See—*
Busse, Claus-Adolf; and Labrande, Jean-Paul, 4,300,626, Cl. 165-96.000.
Evans, William P.; and Leger, Violeta Z., to Union Carbide Corporation. Nonaqueous cell with cathode comprising the reaction product of bismuth trioxide and molybdenum trioxide. 4,301,220, Cl. 429-197.000.
Eventoff, Franklin N. Dual lateral switch device. 4,301,337, Cl. 200-5.00A.
Ex-Cell-O Corporation: *See—*
Frydendal, Tom, 4,300,969, Cl. 156-244.110.
Exide Electronics Corporation: *See—*
Johnson, Robert W., 4,301,398, Cl. 320-21.000.
Exxon Research & Engineering Co.: *See—*
Amick, James A., 4,301,322, Cl. 136-256.000.
Liotta, Ronald, 4,300,994, Cl. 208-8.0LE.
Liotta, Ronald, 4,300,995, Cl. 208-8.0LE.
Pruett, Roy L.; and Bradley, John S., 4,301,086, Cl. 260-438.100.
F. L. Smidth & Co.: *See—*
Hastrup, Niels E., 4,301,128, Cl. 423-242.000.
Fadeev, Petr Y.: *See—*
Mitin, Leonid A.; Fadeev, Petr Y.; Ponomarev, Leonid F.; Fadeev, Vladimir Y.; Rybert, Vyacheslav F.; Reutsky, Jury V.; Kulagin, Rim A.; Vorozheikin, Anatoly A.; Ermilov, Nikolai P.; Dimova, Lidia P.; Doskaziev, Adil G.; Korobkov, Vladlen V.; Babenko, Sergei A.; Akhmatov, Mikhail M.; Zhaksybaev, Nabi K., deceased; and Zhaksybaeva, Ekaterina S., executrix, 4,300,802, Cl. 299-64.000.
Fadeev, Vladimir Y.: *See—*
Mitin, Leonid A.; Fadeev, Petr Y.; Ponomarev, Leonid F.; Fadeev, Vladimir Y.; Rybert, Vyacheslav F.; Reutsky, Jury V.; Kulagin, Rim A.; Vorozheikin, Anatoly A.; Ermilov, Nikolai P.; Dimova, Lidia P.; Doskaziev, Adil G.; Korobkov, Vladlen V.; Babenko, Sergei A.; Akhmatov, Mikhail M.; Zhaksybaev, Nabi K., deceased; and Zhaksybaeva, Ekaterina S., executrix, 4,300,802, Cl. 299-64.000.
Fahey, Robert J.; Norbedo, Robert A.; and Resnick, Martin L., to GTE Products Corp.; and GTE Laboratories Inc. Variable timing system. 4,301,515, Cl. 364-900.000.
Fahrbach, Erich: *See—*
Fottinger, Walter; Tecl, Bohuslav; and Fahrbach, Erich, 4,300,968, Cl. 156-181.000.
Fahrenholtz, Kenneth E.; Guthrie, Robert W.; Kierstead, Richard W.; and Tilley, Jefferson W., to Hoffmann-La Roche Inc. Sulfonamide intermediates for adrenergic blocking agents. 4,301,300, Cl. 564-92.000.
Fairchild Camera & Instr. Corp.: *See—*
Kaltenekker, Bela; and Loofbourrow, William L., 4,300,398, Cl. 73-849.000.
Fairchild Camera and Instrument Corp.: *See—*
Koepp, Ronald L.; Oliver, Floyd F.; and Barnett, James V., 4,301,524, Cl. 368-261.000.
Farha, Floyd, Jr.: *See—*
Haskell, Donald M.; and Farha, Floyd, Jr., 4,301,315, Cl. 585-304.000.
Farooq, Saleem: *See—*
Drabek, Jozef; Ackermann, Peter; Farooq, Saleem; Gsell, Laurenz; and Kristiansen, Odd, 4,301,304, Cl. 568-637.000.
Farrell, Robert E., to Package Machinery Company. Method and apparatus for setting a clamping load. 4,301,100, Cl. 264-40.500.
Farrer, Michael, to Gould Advance Limited. Voltage converter apparatus having output regulating means. 4,301,498, Cl. 363-25.000.
Fauconnet, Michel: *See—*
Baffert, Alain; Fauconnet, Michel; Gales, Christian; and Roig, Claude, 4,301,008, Cl. 210-242.300.
Favin, David L.; Lynn, Peter F.; and Snyder, Paul J., to Bell Telephone Laboratories, Incorporated. Multitone frequency response and envelope delay distortion tests. 4,301,536, Cl. 371-22.000.
Fears, George D.: *See—*
Hodge, Ronald F.; and Fears, George D., 4,300,461, Cl. 111-6.000.
Feast, Alan A. J.: *See—*
Moore, John D.; and Feast, Alan A. J., 4,301,264, Cl. 526-86.000.
Feder, Harold M.; and Chen, Michael J., to United States of America, Energy. Method and system for ethanol production. 4,301,312, Cl. 568-902.000.
Federal Screw Works: *See—*
Dorais, Mark V., 4,301,328, Cl. 179-1.0SA.
Fedotov, Vasilij: *See—*
Egert, Klaus; Heinrich, Wolfgang; Lucas, Klaus; Kuhlbrodt, Klaus-Otto; Berger, Friedrich; Gohler, Peter; Schingnitz, Manfred; Gross, Manfred; Jegorow, Aleksander; Fedotov, Vasilij; Gavrilin, Vladimir; Gudymov, Ernest; Semenov, Vladimir; Achmatov, Igol; Majdurov, Nikolaj; and Abraamov, Evgenij, 4,300,913, Cl. 48-67.000.
Feingers, Judith; Pick, Anthony J.; and Wagner, Daniel B., to Ames-Yissum Ltd. Multilayer column chromatography specific binding assay method, test device and test kit. 4,301,139, Cl. 424-1.000.
Felch, Russell R.: *See—*
Carruth, Grant F.; Pellegrin, Michael T.; Felch, Russell R.; and Atkinson, Donald R., 4,300,929, Cl. 65-2.000.
Feldstein, Nathan. Pretreatment with complexing agent in process for electroless plating. 4,301,190, Cl. 427-97.000.
Felman, Rina I.: *See—*
Ushakov, Konstantin I.; Khilko, Mikhail E.; Felman, Rina I.; Sadykov, Vasily I.; Kalnin, Evgeny I.; and Kovgan, Pavel A., 4,300,949, Cl. 75-73.000.
Felt Products Mfg. Co.: *See—*
DeCore, Robert A.; and Bucher, Anthony J., 4,300,779, Cl. 277-235.00B.
Fernstrom, George A.; Hebeler, Harold H.; Lin, Perry H.; and Moneymaker, Robert R., to Du Pont de Nemours, E. I., and Company. Self-crimping polyamide fibers. 4,301,102, Cl. 264-151.000.
Ferrara, Angelo: *See—*
Ricciardi, Ronald J.; Ferrara, Angelo; and Hartmann, Joseph L., 4,301,510, Cl. 364-567.000.
Ferrill, Jess B.: *See—*
Bunyea, John R.; Ferrill, Jess B.; Hutchinson, Ray A. J.; and Sergeant, Ronald G., 4,300,282, Cl. 29-751.000.
Ferro, Anthony J.; and Goldman, Holliday L., to Allis-Chalmers Corporation. Throttle valve. 4,300,749, Cl. 251-124.000.
Ferrofluidics Corporation: *See—*
Sibley, Clifton B., 4,301,120, Cl. 422-249.000.
Fichtel & Sachs A.G.: *See—*
Seltenheim, Volker; Schubert, August; Paschakarnis, Peter; Vonderau, Josef; Ilzig, Frank; Frosch, Walter; and Fuglein, Egon, 4,301,205, Cl. 428-127.000.
Ficurilli, Nicholas, to Schlegel Corporation. Sash balance foot seal mechanism. 4,300,316, Cl. 49-445.000.
Fierz, Hans: *See—*
Putzar, Roland; and Fierz, Hans, 4,300,900, Cl. 8-524.000.
Fink, Raymond N.: *See—*
Schroeder, William, Jr.; and Fink, Raymond N., 4,300,612, Cl. 150-52.00R.
Firestone Tire & Rubber Company, The: *See—*
Ible, Donald G., 4,300,878, Cl. 425-114.000.
Fischer, Berthold; Kabelitz, Hans-Peter; Pfaff, Hansen; and Schmitz, Andreas, to Leybold-Heraeus GmbH. Positive displacement machine with elastic suspension. 4,300,875, Cl. 418-55.000.

Fischer, Peter: *See—*
Blumcke, Alfred; Fischer, Peter; and Vahlensieck, Hans-Joachim, 4,301,027, Cl. 252-408.000.
Fisher, Charles K.; and Arias, Pierre E., to TRW Inc. Self-retaining spring washer. 4,300,866, Cl. 411-155.000.
Fisher, Robert C., to Quaker Oats Company, The. Convertible load carrying-ride-on vehicle. 4,300,783, Cl. 280-87.02R.
Fisk, Robert W., to General Electric Company. Shell and tube moisture separator reheater with outlet orificing. 4,300,481, Cl. 122-406.00B.
Fitzel, Reinhold: *See—*
Negro, Guido; and Fitzel, Reinhold, 4,300,406, Cl. 74-54.000.
Fitzgerald, Charles A., to Fitzgerald Engineering Company, Inc. Control panel. 4,301,449, Cl. 340-525.000.
Fitzgerald Engineering Company, Inc.: *See—*
Fitzgerald, Charles A., 4,301,449, Cl. 340-525.000.
Fleischman, George L.: *See—*
Minning, Charles P.; and Fleischman, George L., 4,300,624, Cl. 165-32.000.
Fletcher, Kenneth J.: *See—*
Schiffarth, Josef; Lorkin, Clive G.; and Fletcher, Kenneth J., 4,301,387, Cl. 313-355.000.
Fletcher-Terry Company, The: *See—*
Smith, James D.; Salvas, Roger J.; and Shaw, Ralph B., 4,300,684, Cl. 206-493.000.
Flinn, Robert W.; and Robinson, Roy D., to American Greetings Corporation. Candle manufacturing system including wick cutting means. 4,300,424, Cl. 83-374.000.
Flutec Fluidtechnische Gerate GmbH: *See—*
Schon, Otmar P.; and Klauck, Manfred, 4,301,005, Cl. 210-90.000.
Flynn, James P.: *See—*
Taschuk, John N., 4,300,536, Cl. 126-435.000.
FMC Corporation: *See—*
Braksmayer, Diza P.; and Hussain, Syed N., 4,301,057, Cl. 260-37.00N.
Segredo, Guillermo T., 4,300,449, Cl. 100-98.00R.
Vadas, Leslie, 4,300,602, Cl. 141-103.000.
Focke & Co.: *See—*
Focke, Heinz H.; and Liedtke, Kurt, 4,300,676, Cl. 206-264.000.
Focke, Heinz H.; and Liedtke, Kurt, to Focke & Co. Pack, more particularly a cuboid pack, for cigarettes, small cigars and the like. 4,300,676, Cl. 206-264.000.
Fogelberg, Mark J., to Borg-Warner Corporation. Automatic locking clutch. 4,300,667, Cl. 192-36.000.
Fogg, O. Douglas: *See—*
Haag, George A.; Fogg, O. Douglas; Greenley, Gordon A.; Shepard, Steve A.; and Terry, F. Duncan, 4,301,513, Cl. 364-900.000.
Forbes, Brian K.: *See—*
Catiller, Robert D.; and Forbes, Brian K., 4,301,505, Cl. 364-200.000.
Ford Motor Company: *See—*
Beyer, Frederick A., 4,300,718, Cl. 236-34.500.
Raghupathi, Narasimhan; and Kure, Edward A., 4,300,410, Cl. 74-579.00R.
Schechter, Michael M., 4,300,509, Cl. 123-499.000.
Fordham, Roger G.: *See—*
Paddison, Eric, deceased; Fordham, Roger G.; and Thomas, Alan J., 4,301,408, Cl. 324-141.000.
Foseco International Limited: *See—*
Schiffarth, Josef; Lorkin, Clive G.; and Fletcher, Kenneth J., 4,301,387, Cl. 313-355.000.
Fottinger, Walter; Tecl, Bohuslav; and Fahrbach, Erich, to Carl Freudenberg, Firma. Method for bonding fibrous web materials. 4,300,968, Cl. 156-181.000.
Fowler, David M., III: *See—*
Funk, Buddy K.; and Fowler, David M., III, 4,301,447, Cl. 340-365.00P.
France, Randall W.: *See—*
Brown, James B.; and France, Randall W., 4,300,810, Cl. 339-74.00R.
Frank, Patricia; Kraychy, Stephen; and Le Von, Ernest F., to G. D. Searle & Co. Radiopharmaceutical method for monitoring kidneys. 4,301,140, Cl. 424-1.500.
Frankenstein, Guenther E.: *See—*
Jellinek, Hans H. G.; Frankenstein, Guenther E.; and Hanamoto, Ben, 4,301,208, Cl. 428-334.000.
Franklin, Michael L.; and Jeunelot, Charles W., to Hoffmann-La Roche Inc. Dual wavelength spectrophotometer for ampoule leak detection and content inspection. 4,300,689, Cl. 209-524.000.
Franz, Dennis L. MHD Engine. 4,300,512, Cl. 123-536.000.
Franz, Helmut; Hanlon, James H.; and Shick, Lloyd G., to PPG Industries, Inc. Siloxane release surfaces on glass. 4,301,197, Cl. 427-353.000.
Frederiksen, Jeffrey E., to Bally Manufacturing Corporation. Home computer and game apparatus. 4,301,503, Cl. 364-200.000.
Frees, Kenneth A., to Missouri Research Laboratories, Inc. Push-pull apparatus for walkie fork truck. 4,300,867, Cl. 414-493.000.
Freiberg, Ashley H.: *See—*
Thiele, Gerald H.; Freiberg, Ashley H.; Skiles, Robert L.; and King, David L., 4,300,945, Cl. 71-95.000.
Freidinger, Roger M.: *See—*
Veber, Daniel F.; and Freidinger, Roger M., 4,301,151, Cl. 424-177.000.
French, Donald E.: *See—*
Holscher, Donald J.; and French, Donald E., 4,301,471, Cl. 358-105.000.
Frewer, Hans; Muller, Rainer; and Schiffers, Ulrich, to Kraftwerk Union Aktiengesellschaft. Method and apparatus for the gasification of coal. 4,300,916, Cl. 48-210.000.
Friedl, Reiner: *See—*
Baier, Werner; and Friedl, Reiner, 4,300,720, Cl. 237-12.30A.
Frigerio, Davide: *See—*
Nava, Pier L.; Testa, Carlo; and Frigerio, Davide, 4,300,242, Cl. 2-412.000.
Fritz, Gary R.; and Robinson, John W., to Kimball International, Inc. Blind capture system. 4,300,436, Cl. 84-345.000.
Frommer, Elmar: *See—*
Fuchs, Hugo; Grosskinsky, Otto-Alfred; Frommer, Elmar; and Kartte, Klaus, 4,301,073, Cl. 260-239.30A.
Frosch, Walter: *See—*
Seltenheim, Volker; Schubert, August; Paschakarnis, Peter; Vonderau, Josef; Ilzig, Frank; Frosch, Walter; and Fuglein, Egon, 4,301,205, Cl. 428-127.000.
Frost, Paul E.; and Stewart, James R., to New Stone, Inc. Building eaves shield. 4,300,319, Cl. 52-11.000.
Frydendal, Tom, to Ex-Cell-O Corporation. Cardboard laminate for foodstuffs and method for production thereof. 4,300,969, Cl. 156-244.110.
Frye, Greg G.: *See—*
Wallace, Kurt F.; Frye, Greg G.; and Grayson, David A., 4,301,473, Cl. 358-166.000.
Fuchs, Hugo; Grosskinsky, Otto-Alfred; Frommer, Elmar; and Kartte, Klaus, to BASF Aktiengesellschaft. Purification of caprolactam. 4,301,073, Cl. 260-239.30A.
Fuglein, Egon: *See—*
Seltenheim, Volker; Schubert, August; Paschakarnis, Peter; Vonderau, Josef; Ilzig, Frank; Frosch, Walter; and Fuglein, Egon, 4,301,205, Cl. 428-127.000.
Fuji Electric Co., Ltd.: *See—*
Hino, Kazuhiko; and Mizutani, Masami, 4,300,358, Cl. 62-256.000.
Fuji Kiko Co., Ltd.: *See—*
Matsuoka, Hideoki; and Kondo, Yoshinobu, 4,300,789, Cl. 280-801.000.
Fuji Photo Film Co., Ltd.: *See—*
Hashiue, Masakazu, 4,301,374, Cl. 250-566.000.
Ichijima, Seiji; and Furutachi, Nobuo, 4,301,235, Cl. 430-387.000.
Idota, Yoshio; and Yamada, Minoru, 4,301,236, Cl. 430-393.000.
Nakamura, Kotaro; Suzuki, Yoshiaki; Hara, Hiroshi; Sawada, Satoru; and Oono, Shigeru, 4,301,223, Cl. 430-17.000.
Oishi, Kengo; and Suzuki, Osamu, 4,300,729, Cl. 242-74.100.
Saito, Mitsuo, 4,301,241, Cl. 430-569.000.
Sakaki, Hirokazu; Shirai, Akira; and Ohashi, Azusa, 4,301,229, Cl. 430-158.000.
Fujikawa, Masazumi: *See—*
Imazaki, Hideyuki; Fujikawa, Masazumi; and Kariya, Hiromitsu, 4,301,173, Cl. 424-288.000.
Fujikawa, Misao, to Sodick Co., Ltd. Presetter. 4,301,350, Cl. 219-69.00R.
Fujikawa, Noboru: *See—*
Taguchi, Tadashi; Fujikawa, Noboru; Kohno, Mitsuo; Yoshitake, Katsumi; and Satake, Kunio, 4,301,230, Cl. 430-273.000.
Fujimoto, Takako: *See—*
Yamanaka, Motosuke; Saito, Isao; Yamatsu, Kiyomi; and Fujimoto, Takako, 4,301,169, Cl. 424-273.00R.
Fujishima, Minoru: *See—*
Hirayama, Takao; Fujishima, Minoru; Kaneko, Hisasi; and Tanaka, Shigeyoshi, 4,301,048, Cl. 260-22.0CQ.
Fujishiro, Takeshi: *See—*
Chiba, Masao; and Fujishiro, Takeshi, 4,300,991, Cl. 204-195.00S.
Fujita, Kenji: *See—*
Ibe, Kazuhiko; and Fujita, Kenji, 4,300,257, Cl. 15-93.00A.
Fujitsu Limited: *See—*
Suzuki, Yuichi; Okada, Masanori; and Henmi, Zenzo, 4,300,958, Cl. 148-120.000.
Fujiwara, Katsuji; Miyata, Osamu; and Oike, Tadashi, to TLV Co., Ltd. Steam trap with spherical inverted bucket float. 4,300,588, Cl. 137-185.000.
Fujiwara, Toshihide: *See—*
Ida, Hideaki; and Fujiwara, Toshihide, 4,301,116, Cl. 422-65.000.
Fukinuki, Takahiko; Yoshigi, Hiroshi; and Shimazaki, Yumiko, to Hitachi, Ltd. Signal processing system of facsimile. 4,301,479, Cl. 358-257.000.
Fukuda, Kunio: *See—*
Yamashita, Izumi; Yoshida, Kazuo; Kusumi, Yuji; Fukuda, Kunio; and Tazaki, Kichiya, 4,301,062, Cl. 260-45.75B.
Fukui, Kiyoshi; and Kakeya, Noboru, to UBE Industries, Ltd. Method for producing triphenylphosphine. 4,301,301, Cl. 568-17.000.
Fukui, Tsugushi: *See—*
Sato, Norimoto; Miyaoka, Minoru; Yamasaki, Shin; Inoue, Kimio; Kuriyama, Akimasa; Fukui, Tsugushi; and Asai, Toshihiro, 4,300,838, Cl. 366-84.000.
Fukuura, Yukio: *See—*
Honda, Toshio; Ogawa, Masao; Fukuura, Yukio; Ishikawa, Hikaru; Naito, Kazuo; Akiyama, Setsuo; and Tanuma, Itsuo, 4,300,970, Cl. 156-244.110.
Fulks, Robert G.: *See—*
Rose, Stanley E.; and Fulks, Robert G., 4,300,846, Cl. 400-124.000.
Funatsu, Takenori; Maejima, Masuhiko; Inuzuka, Yoichi; and Tsuji, Kosaku, to Toyo Ink Mfg. Ltd. Method of producing an azo pigment suitable for use in a gravure printing ink and azo pigments produced thereby. 4,301,049, Cl. 260-23.0AR.

Funk, Buddy K.; and Fowler, David M., III, to Sperry Corporation. Scan control for light beam position indicator. 4,301,447, Cl. 340-365.00P.
Funke, Gustaf; and Hendberg, Bernt, to JiHaPlast Johnson Juls AB. Blocking device for use with cup receptacles. 4,300,704, Cl. 221-301.000.
Furihata, Hiroyuki, to Olympus Optical Co., Ltd. Forceps for extracting stones in the pelvis of a kidney. 4,300,564, Cl. 128-321.000.
Furman, Anatoly V.: *See—*
Galkin, Mikhail M.; Kornienko, Marat I.; Podboronov, Boris P.; Sokolov, Sergei S.; and Furman, Anatoly V., 4,301,402, Cl. 324-62.000.
Furuhata, Takashi; and Kobori, Yasunori, to Hitachi, Ltd. Phase-lock control device. 4,301,395, Cl. 318-314.000.
Furukawa, Noriyuki, to Yazaki Sogyo Kabushiki Kaisha. Luminant pointer for meters. 4,300,470, Cl. 116-332.000.
Furusawa, Tomotaka: *See—*
Sugio, Akitoshi; Amemiya, Akira; Kunii, Tadashi; Furusawa, Tomotaka; Takeda, Mutsuhiko; Tanaka, Katsumasa; and Umemura, Toshikazu, 4,301,273, Cl. 528-230.000.
Furutachi, Nobuo: *See—*
Ichijima, Seiji; and Furutachi, Nobuo, 4,301,235, Cl. 430-387.000.
Futawatari, Hajime: *See—*
Hatada, Toshio; Senshu, Takao; Arai, Akira; Harada, Fumio; Matsuzaki, Atsushi; Futawatari, Hajime; Imaizumi, Yutaka; and Takeda, Sumiyoshi, 4,300,629, Cl. 165-151.000.
Future Packaging Machinery Co., Inc.: *See—*
Bridger, William L., 4,300,327, Cl. 53-258.000.
G. D. Searle & Co.: *See—*
Frank, Patricia; Kraychy, Stephen; and Le Von, Ernest F., 4,301,140, Cl. 424-1.500.
Sanvordeker, Dilip R., 4,301,146, Cl. 424-80.000.
G.M.C. Research, Inc.: *See—*
Bernecker, Gunther, 4,301,096, Cl. 261-41.00B.
G & W Machinery Inc.: *See—*
Koch, Manfred; and Bosshard, Ernst, 4,300,727, Cl. 242-2.000.
Gabel, Brian L.: *See—*
McWhorter, Thomas E.; Kekuna, Haunani; Gabel, Brian L.; and Osmundson, Eric C., 4,300,355, Cl. 62-48.000.
Gaeta, Marco, to Aromec S.r.l. Up-and-down pulley device for suspension lamps and the like. 4,300,732, Cl. 242-107.300.
GAF Corporation: *See—*
Barabas, Eugene S.; Mallya, Prakash; and Gromelski, Stanley J., Jr., 4,301,267, Cl. 526-313.000.
Lorenz, Donald H.; Tu, Shu T.; and Wyman, Donald P., 4,301,209, Cl. 428-339.000.
Gagne, Roger O., to International Packings Corporation. High pressure shaft seal. 4,300,778, Cl. 277-153.000.
Gagneraud, Francis. Process of thermal decomposition of rubber materials. 4,300,985, Cl. 201-10.000.
Gaines, Albert L., to Combustion Engineering, Inc. End support for superconducting magnet. 4,301,384, Cl. 310-11.000.
Gaines, Albert L.: *See—*
Shotwell, Kenneth E.; and Gaines, Albert L., 4,301,385, Cl. 310-11.000.
Gajewski, Henry M.; and Measells, Paul E., to Baxter Travenol Laboratories, Inc. Blood compatible polymers and medical devices made therefrom. 4,300,559, Cl. 128-272.000.
Galbraith, David W., to University of Nebraska, The Board of Regents of the. Identification and sorting of plant heterokaryons. 4,300,310, Cl. 47-58.000.
Gales, Christian: *See—*
Baffert, Alain; Faucornet, Michel; Gales, Christian; and Roig, Claude, 4,301,008, Cl. 210-242.300.
Galkin, Mikhail M.; Kornienko, Marat I.; Podboronov, Boris P.; Sokolov, Sergei S.; and Furman, Anatoly V. Electrical measuring circuit. 4,301,402, Cl. 324-62.000.
Galli, Remo: *See—*
Palla, Ottorino; Galli, Remo; Gozzo, Franco; and Lorusso, Simone, 4,301,174, Cl. 424-300.000.
Gallina, Gabriel V.: *See—*
Meechan, Robert M.; and Gallina, Gabriel V., 4,300,323, Cl. 52-464.000.
Gallo, Mario; and Wirth, Johannes, to Wirth, Gallo & Co. Mass and force meter. 4,300,648, Cl. 177-229.000.
Galusha, Glenn D.: *See—*
Brown, Roger A.; Clyde, William F.; and Galusha, Glenn D., 4,300,429, Cl. 83-651.100.
Games, John E.: *See—*
Hmelovsky, Michael W.; and Games, John E., 4,300,663, Cl. 187-29.00R.
Gandi, Robert A.; and Martino, Anthony P., to Becton, Dickinson and Company. Suction and oxygenation catheter. 4,300,550, Cl. 128-207.180.
Ganellin, Charon R.: *See—*
Durant, Graham J.; and Ganellin, Charon R., 4,301,165, Cl. 424-269.000.
Gardella, William A.: *See—*
Cumming, Richard J.; DeBano, John; Sajewski, Vincent F.; Zens, John F.; and Gardella, William A., 4,300,894, Cl. 493-210.000.
Gardner, Jeffrey M.; and Nelson, Bennie C., Jr., to Container Corporation of America. Packaging structure. 4,300,687, Cl. 206-279.000.
Garofalo, Joseph. Ratchet wrench with one-hand control and neutral capability. 4,300,413, Cl. 81-62.000.
Garrett Corporation, The: *See—*
Daeschner, John C., 4,300,587, Cl. 137-117.000.
Garstang, James H.: *See—*
Davies, Haydn S.; Garstang, James H.; and Timmins, Cyril, 4,300,999, Cl. 208-212.000.
Gartside, Robert J., to Stone & Webster Engineering Corp. Pre-heat vaporization system. 4,300,998, Cl. 208-127.000.
Gasparrini, Charles R., to Baldwin-Gegenheimer Corporation. Printing press liquid circulating system including an anti-foaming device. 4,300,450, Cl. 101-364.000.
Gauthier, Michael K.: *See—*
Miller, Emmett L.; Shumka, Alex; and Gauthier, Michael K., 4,301,409, Cl. 324-158.00D.
Gavens, Paul D.: *See—*
Caunt, Anthony D.; and Gavens, Paul D., 4,301,029, Cl. 252-429.00B.
Gavrilin, Vladimir: *See—*
Egert, Klaus; Heinrich, Wolfgang; Lucas, Klaus; Kuhlbrodt, Klaus-Otto; Berger, Friedrich; Gohler, Peter; Schingnitz, Manfred; Gross, Manfred; Jegorow, Aleksander; Fedotov, Vasilij; Gavrilin, Vladimir; Gudymov, Ernest; Semenov, Vladimir; Achmatov, Igol; Majdurov, Nikolaj; and Abraamov, Evgenij, 4,300,913, Cl. 48-67.000.
Gellerson, Walter G.: *See—*
Helm, James D.; and Gellerson, Walter G., 4,300,664, Cl. 188-265.000.
Gendelman, Bernard: *See—*
Weintraub, Morton; Waxman, Elliot; and Gendelman, Bernard, 4,301,542, Cl. 455-353.000.
General Box Company: *See—*
Wait, Hershey L.; and Kordowski, Edward S., 4,300,694, Cl. 217-43.00R.
General Dynamics Corporation, Pomona Division: *See—*
Palmer, John P., 4,301,543, Cl. 455-612.000.
General Electric Company: *See—*
Bloomer, Milton D.; Harnden, John D., Jr.; and Deallenbach, Denise A., 4,300,392, Cl. 73-362.0AR.
Castonguay, Roger N.; and Jencks, Charles L., 4,301,342, Cl. 200-153.0SC.
Castonguay, Roger N.; and Jencks, Charles L., 4,301,346, Cl. 200-320.000.
Castonguay, Roger N.; and Jencks, Charles L., 4,301,433, Cl. 335-13.000.
Castonguay, Roger N., 4,301,434, Cl. 335-20.000.
Castonguay, Roger N.; and McCuin, Jon P., 4,301,435, Cl. 335-26.000.
Castonguay, Roger N.; and Jencks, Charles L., 4,301,436, Cl. 335-166.000.
Cooper, Glenn D.; and Katchman, Arthur, 4,301,059, Cl. 260-42.180.
Fisk, Robert W., 4,300,481, Cl. 122-406.00B.
Green, Wayne T., 4,301,520, Cl. 365-189.000.
Haase, Michael A.; Miller, Edward B.; Eichelberger, Charles W.; Cutler, Scott E.; and Wojnarowski, Robert J., 4,301.509, Cl. 364-557.000.
Habesch, Emil M., Jr.; and Rairden, John R., 4,300,947, Cl. 75-0.50R.
Henry, Robert L.; and Skinner, Frank R., 4,300,522, Cl. 125-11.00R.
Hollis, Nicholas E.; Swift, Michael P.; and Halila, Herbert, 4,300,774, Cl. 277-12.000.
Luborsky, Fred E.; and Walter, John L., 4,300,950, Cl. 75-123.00B.
Quine, John P., 4,301,347, Cl. 219-10.55F.
Robinson, Paul B., 4,301,445, Cl. 340-825.540.
Schweder, Walter M.; and Lenz, Henry G., 4,301,386, Cl. 310-59.000.
Strong, Herbert M., 4,301,134, Cl. 423-446.000.
Wolfrey, Austin A., 4,301,053, Cl. 260-29.2TN.
General Electric Company Limited, The: *See—*
Paddison, Eric, deceased; Fordham, Roger G.; and Thomas, Alan J., 4,301,408, Cl. 324-141.000.
General Motors Corporation: *See—*
Cumming, Richard J.; DeBano, John; Sajewski, Vincent F.; Zens, John F.; and Gardella, William A., 4,300,894, Cl. 493-210.000.
Hallmann, Melvin H.; and Stephens, Burr E., 4,300,890, Cl. 474-110.000.
Kondziola, Joseph D., 4,300,731, Cl. 242-107.200.
Mathues, Thomas P., 4,300,363, Cl. 64-27.0NM.
Mathues, Thomas P., 4,300,670, Cl. 192-106.100.
Symons, James D., 4,300,777, Cl. 277-153.000.
General Signal Corporation: *See—*
Sutton, Gary W., 4,300,591, Cl. 137-493.400.
Werych, Ewald R., 4,300,882, Cl. 432-247.000.
General Thermal Corporation: *See—*
McLaughlin, Jay C., 4,300,275, Cl. 29-157.30C.
General Tire & Rubber Company, The: *See—*
Neubert, Terry C., 4,300,972, Cl. 156-307.500.
Reed, Thomas F.; and Ritzert, Raymond K., 4,300,767, Cl. 273-61.00R.
Genrad, Inc.: *See—*
Rose, Stanley E.; and Fulks, Robert G., 4,300,846, Cl. 400-124.000.
Genter, Roland E., to Digital Switch Corporation. Framing circuit for time multiplexed data. 4,301,534, Cl. 370-105.000.
Geolograph Company, The: *See—*
Williams, Henry L., 4,300,352, Cl. 60-567.000.
Geophysical Systems Corp.: *See—*
Kelm, Edward C., 4,301,521, Cl. 367-78.000.

Georgiev, Georgi D., to Capella Inc. Rotary machine with lenticular rotor and a circular guide member therefor. 4,300,874, Cl. 418-54.000.
Gergis, Isoris S., to Rockwell International Corporation. Replicate/-transfer bubble domain switch. 4,301,517, Cl. 365-16.000.
Gershbein, George. Jewelry smoking device. 4,300,578, Cl. 131-330.000.
Gewerkschaft Eisenhutte Westfalia: *See—*
Von Viebahn, Hans-Eckart; and Trusczcinski, Helmut, 4,300,673, Cl. 198-611.000.
Giering, Linda P.; and Brownrigg, John T., to Baird Corporation. Portable fluorescence instrument. 4,301,372, Cl. 250-461.00R.
Giguere, R. James, to Cereal Enterprises, Inc. Method and apparatus for degerminating a grain kernel by impelling the kernels along a guide vane into an impact surface. 4,301,183, Cl. 426-482.000.
Giles, Ralph R.; and Weaver, Max A., to Eastman Kodak Company. Azo dyes from a 2-aminothiophene having 1 or 2 sulfated hydroxyalkoxycarbonyl or N-(hydrocyalkyl) carbamoyl groups on its ring. 4,301,068, Cl. 260-152.000.
Giles, Ralph R.; and Weaver, Max A., to Eastman Kodak Company. Azo dyes from a 5-aminopyrazole bearing 1 to 2 sulfated hydroxyalkoxycarbonyl or N-(hydroxyalkyl) carbamoyl groups on its ring. 4,301,070, Cl. 260-155.000.
Giles, Ralph R.; and Weaver, Max A., to Eastman Kodak Company. Azo dyes from aniline having 1 or 2 sulfated hydroxyalkoxycarbonyl or N-(hydroxyalkyl)carbamoyl groups on its ring, 4,301,071, Cl. 260-158.000.
Gillette, Richard J., to McDonnell Douglas Corporation. Speech compression. 4,301,333, Cl. 179-15.55R.
Glacier Metal Co., Ltd., The: *See—*
Davies, Glyndwr J., 4,301,213, Cl. 428-419.000.
Gladysz, Victor, to Canadian Appliance Manufacturing Company Limited. Belt tensioning assembly for a clothes dryer. 4,300,293, Cl. 34-108.000.
Glinsmann, Gilbert R., to Phillips Petroleum Company. Aqueous petroleum sulfonate mixture and method of use in post-primary oil recovery. 4,300,635, Cl. 166-274.000.
Globe Ticket Company: *See—*
Betterley, James E., 4,300,297, Cl. 40-20.00R.
Goebel, Herbert, to Siemens Aktiengesellschaft. X-Ray diffractometer with high time resolution. 4,301,364, Cl. 250-272.000.
Goetz, Norbert: *See—*
Buschmann, Ernst; Zeeh, Bernd; Pommer, Ernst-Heinrich; and Goetz, Norbert, 4,301,284, Cl. 544-106.000.
Goetze AG: *See—*
Rottlander, Manfred, 4,300,419, Cl. 82-44.000.
Gohler, Peter: *See—*
Egert, Klaus; Heinrich, Wolfgang; Lucas, Klaus; Kuhlbrodt, Klaus-Otto; Berger, Friedrich; Gohler, Peter; Schingnitz, Manfred; Gross, Manfred; Jegorow, Aleksander; Fedotov, Vasilij; Gavrilin, Vladimir; Gudymov, Ernest; Semenov, Vladimir; Achmatov, Igol; Majdurov, Nikolaj; and Abraamov, Evgenij, 4,300,913, Cl. 48-67.000.
Golden, Bruce M.: *See—*
Harnly, James M.; O'Haver, Thomas C.; Wolf, Wayne R.; and Golden, Bruce M., 4,300,833, Cl. 356-307.000.
Goldfarb, Adolph E.; and Dekan, Howard L., to Goldfarb, Adolph E. Surprise action game. 4,300,762, Cl. 273-1.0GC.
Goldman, Holliday L.: *See—*
Ferro, Anthony J.; and Goldman, Holliday L., 4,300,749, Cl. 251-124.000.
Goldman, Mark B.; Kintigh, Dana W.; and Chalifour, Henri R., to Raytheon Company. Microwave diode with high resistance layer. 4,301,429, Cl. 333-22.00R.
Goldmann, Wolf; Michaelsen, Dieter; Dreyer, Dieter; Holsiepe, Dietmar; Tiggesbaumker, Peter; Bauer, Klaus; Durr, Manfred; and Mersmann, Heinz G., to Krupp Polysius AG. Process for the heat-treatment of fine-grained material. 4,300,879, Cl. 432-14.000.
Goodman System Company, Inc., The: *See—*
Goodman, Toronita P., 4,300,483, Cl. 123-25.00J.
Goodman, Toronta P., 4,300,484, Cl. 123-25.00J.
Goodman, Toronta P., 4,300,485, Cl. 123-25.00J.
Goodman, Toronita P., to Goodman System Company, Inc., The. Electronically controlled fluid injection system for an internal combustion engine. 4,300,483, Cl. 123-25.00J.
Goodman, Toronta P., to Goodman System Company, Inc., The. Electronically controlled fluid injection system for an internal combustion engine. 4,300,484, Cl. 123-25.00J.
Goodman, Toronta P., to Goodman System Company, Inc., The. Electronically controlled fluid injection system for an internal combustion engine. 4,300,485, Cl. 123-25.00J.
Goodnow, Robert A.; Shade, Floyd J.; Sloboth, Thomas A.; and Kaye, Donald J., to Schering Corporation. Method and nozzle for nasal vaccination of immature mammals. 4,300,545, Cl. 128-200.140.
Goodstine, Stephen L.; and Rader, Philip C., to Combustion Engineering, Inc. Flue gas scrubbing system. 4,301,127, Cl. 423-242.000.
Goodyear Tire & Rubber Company, The: *See—*
Kavchok, Ronald W., 4,300,615, Cl. 152-357.00R.
Kuczkowski, Joseph A., 4,301,296, Cl. 560-152.000.
Lal, Joginder; and Senyek, Michael L., 4,301,258, Cl. 525-334.000.
Lal, Joginder; and Senyek, Michael L., 4,301,259, Cl. 525-334.000.
Marencak, Karol; and Rye, Grover W., 4,300,957, Cl. 148-6.310.
Gordon, Daniel I.; Schwee, Leonard J.; and Anderson, Wallace E., to United States of America, Navy. Magnetoresistive power amplifier. 4,301,418, Cl. 330-62.000.
Gordon, James W.: *See—*
Horlenko, Theodore; Paul, James L.; and Gordon, James W., 4,301,298, Cl. 560-218.000.
Gorecka, Helena: *See—*
Schroeder, Jeizy; Lewandowski, Mieczyslaw; Kuzko, Antoni; Gorecki, Henryk; Zielinski, Krzysztof; Pozniak, Tadeusz; Zieba, Stefan; Gorecka, Helena; Pawelczyk, Adam; and Wysocki, Andizej, 4,301,130, Cl. 423-320.000.
Gorecki, Henryk: *See—*
Schroeder, Jeizy; Lewandowski, Mieczyslaw; Kuzko, Antoni; Gorecki, Henryk; Zielinski, Krzysztof; Pozniak, Tadeusz; Zieba, Stefan; Gorecka, Helena; Pawelczyk, Adam; and Wysocki, Andizej, 4,301,130, Cl. 423-320.000.
Gosselink, Eugene P.: *See—*
Wentler, George E.; McGrady, Joseph; Gosselink, Eugene P.; and Cilley, William A., 4,301,044, Cl. 252-545.000.
Gosudarstwennyi Nautschno Issledowatelskij I Projektnyi Institut Asotnoj Promuschlennosti I Produktow Organitschekogo Sintesa: *See—*
Egert, Klaus; Heinrich, Wolfgang; Lucas, Klaus; Kuhlbrodt, Klaus-Otto; Berger, Friedrich; Gohler, Peter; Schingnitz, Manfred; Gross, Manfred; Jegorow, Aleksander; Fedotov, Vasilij; Gavrilin, Vladimir; Gudymov, Ernest; Semenov, Vladimir; Achmatov, Igol; Majdurov, Nikolaj; and Abraamov, Evgenij, 4,300,913, Cl. 48-67.000.
Gotz, Klaus, to Nordischer Maschinenbau Rud. Baader GmbH & Co. K.G. Process and apparatus for the preparation of flat-fish for the bleeding. 4,300,263, Cl. 17-45.000.
Gould Advance Limited: *See—*
Farrer, Michael, 4,301,498, Cl. 363-25.000.
Gould, Henry D., to Shasta Industries, Inc. Pool cleaning head. 4,300,246, Cl. 4-490.000.
Gould Inc.: *See—*
Bourke, Robert F., 4,301,396, Cl. 318-490.000.
Delay, Duane M., Sr., 4,300,597, Cl. 138-89.000.
Gryctko, Carl E., 4,301,491, Cl. 361-93.000.
Panaro, Robert J., 4,300,281, Cl. 29-623.000.
Gozzo, Franco: *See—*
Palla, Ottorino; Galli, Remo; Gozzo, Franco; and Lorusso, Simone, 4,301,174, Cl. 424-300.000.
Grabowski, Albert T.; and Khan, Sadath U., to Warner-Lambert Company. Method of administering calcium valproate. 4,301,176, Cl. 424-318.000.
Gradco-Dendoki, Inc.: *See—*
Du Bois, R. Clark; and Hamma, John, 4,300,710, Cl. 226-74.000.
Graham, Anne M.: *See—*
Pesa, Frederick A.; and Graham, Anne M., 4,301,077, Cl. 260-346.110.
Graiff, Leonard B.; and Haury, Earl J., to Shell Oil Company. Thermal insulated intake ports. 4,300,494, Cl. 123-193.00H.
Grant, Thomas S., to Borg-Warner Chemicals, Inc. Nylon/san laminates. 4,301,216, Cl. 428-476.300.
Granzer, Ernold: *See—*
Nahm, Helmut; and Granzer, Ernold, 4,301,295, Cl. 560-62.000.
Gravel, Robert L., to Sperry Corporation. Fiber optic transducer and method of manufacture therefor. 4,300,813, Cl. 350-96.100.
Gray, Frederick W., to Colgate-Palmolive Company. Method for bleaching with peroxymonosulfate-based compositions. 4,300,897, Cl. 8-111.000.
Gray, Kenneth P., to Carrier Corporation. Refrigerant solar energy system and method. 4,300,540, Cl. 126-452.000.
Gray, Roger M.: *See—*
Danchak, Nicholas, Jr.; Saxinger, Allan L.; Gray, Roger M.; and Kockler, Barry C., 4,300,756, Cl. 271-8.00R.
Grayson, David A.: *See—*
Wallace, Kurt F.; Frye, Greg G.; and Grayson, David A., 4,301,473, Cl. 358-166.000.
Grebeshova, Renata N.: *See—*
Rumyantseva, Galina N.; Grebeshova, Renata N.; Kalunyants, Kalust A.; Artemieva, Irina V.; and Lomakina, Raisa D., 4,301,251, Cl. 435-267.000.
Green, Wayne T., to General Electric Company. Differential row readout of CID imagers. 4,301,520, Cl. 365-189.000.
Green, William A.; and Parsons, William B., to Owens-Corning Fiberglas Corporation. Packaged strand. 4,300,734, Cl. 242-170.000.
Greene, Janice L., to Standard Oil Company. Manufacture of carbamates from cyanogen. 4,301,087, Cl. 260-463.000.
Greene, Janice L., to Standard Oil Company. Manufacture of allene from acetone. 4,301,319, Cl. 585-638.000.
Greenley, Gordon A.: *See—*
Haag, George A.; Fogg, O. Douglas; Greenley, Gordon A.; Shepard, Steve A.; and Terry, F. Duncan, 4,301,513, Cl. 364-900.000.
Griffin, Daniel J. Set of multiple interleaved forms with separable heading input flap. 4,300,790, Cl. 282-9.00R.
Griffith, Jeffrey D., to Dow Chemical Company, The. Method and composition for treating soil to suppress the nitrification of ammonium nitrogen therein. 4,300,940, Cl. 71-27.000.
Griffith Laboratories U.S.A., Inc.: *See—*
Alguire, Donald E.; Bennett, Robert; Kotulla, Norbert; and Yeung, Anthony C., 4,301,113, Cl. 422-2.000.
Grimshaw, Keith; and Ennis, Brian J., to English Card Clothing Company Limited, The. Flats for carding machines. 4,300,266, Cl. 19-113.000.
Gromelski, Stanley J., Jr.: *See—*
Barabas, Eugene S.; Mallya, Prakash; and Gromelski, Stanley J., Jr., 4,301,267, Cl. 526-313.000.

Groot, Arien: *See—*
Jansen, Augustinus M.; and Groot, Arien, 4,301,417, Cl. 329-50.000.
Gross, Manfred: *See—*
Egert, Klaus; Heinrich, Wolfgang; Lucas, Klaus; Kuhlbrodt, Klaus-Otto; Berger, Friedrich; Gohler, Peter; Schingnitz, Manfred; Gross, Manfred; Jegorow, Aleksander; Fedotov, Vasilij; Gavrilin, Vladimir; Gudymov, Ernest; Semenov, Vladimir; Achmatov, Igol; Majdurov, Nikolaj; and Abraamov, Evgenij, 4,300,913, Cl. 48-67.000.
Grosskinsky, Otto-Alfred: *See—*
Fuchs, Hugo; Grosskinsky, Otto-Alfred; Frommer, Elmar; and Kartte, Klaus, 4,301,073, Cl. 260-239.30A.
Grove, Edward E., to Tranter, Inc. Stack gas reheater system. 4,300,920, Cl. 55-84.000.
Gruet, Michel; Lafforgue, Paul; and Michel, Pierre, to Compagnie Generale des Matieres Nucleaires. Methods of processing uraniferous ores. 4,301,123, Cl. 423-20.000.
Grullmeier, Artur, to Rapp, Eugen; and Haug, Paul. Boosted hydropneumatic drive. 4,300,351, Cl. 60-560.000.
Gryctko, Carl E., to Gould Inc. Combined fault current and applied voltage tripping for solid state trip circuit and particular current transformer construction. 4,301,491, Cl. 361-93.000.
Grzywa, Edward: *See—*
Kiedik, Maciej; Kolt, Jozef; Czyz, Jerzy; Grzywa, Edward; Niezgoda, Anna; and Terelak, Kazimierz, 4,301,305, Cl. 568-727.000.
Gschwendtner, Joerg: *See—*
Clemen, Rainer; Gschwendtner, Joerg; and Haug, Werner, 4,301,381, Cl. 307-475.000.
Gsell, Laurenz: *See—*
Drabek, Jozef; Ackermann, Peter; Farooq, Saleem; Gsell, Laurenz; and Kristiansen, Odd, 4,301,304, Cl. 568-637.000.
GTE Laboratories Inc.: *See—*
Fahey, Robert J.; Norbedo, Robert A.; and Resnick, Martin L., 4,301,515, Cl. 364-900.000.
GTE Products Corp.: *See—*
Fahey, Robert J.; Norbedo, Robert A.; and Resnick, Martin L., 4,301,515, Cl. 364-900.000.
Gudymov, Ernest: *See—*
Egert, Klaus; Heinrich, Wolfgang; Lucas, Klaus; Kuhlbrodt, Klaus-Otto; Berger, Friedrich; Gohler, Peter; Schingnitz, Manfred; Gross, Manfred; Jegorow, Aleksander; Fedotov, Vasilij; Gavrilin, Vladimir; Gudymov, Ernest; Semenov, Vladimir; Achmatov, Igol; Majdurov, Nikolaj; and Abraamov, Evgenij, 4,300,913, Cl. 48-67.000.
Guiguizian, Jacques: *See—*
Cormier, Raymond G.; and Guiguizian, Jacques, 4,300,830, Cl. 355-3.0SH.
Gulf Research & Development Company: *See—*
Beach, David L.; and Harrison, James J., 4,301,318, Cl. 585-526.000.
Gupner, Otto, to Metallgesellschaft Aktiengesellschaft. Insulating current feed-through. 4,300,922, Cl. 55-146.000.
Gupta, Krishna M. Porosimeter arrangement. 4,300,386, Cl. 73-38.000.
Gusching, Nagle V.; and Wagner, Ted R., to Monarch Machine Tool Company, The. Tool turret mechanism. 4,300,418, Cl. 82-36.00A.
Guthrie, Robert W.: *See—*
Fahrenholtz, Kenneth E.; Guthrie, Robert W.; Kierstead, Richard W.; and Tilley, Jefferson W., 4,301,300, Cl. 564-92.000.
Gutleber, Frank S., to United States of America, Army. Orthogonal spread spectrum time division multiple accessing mobile subscriber access system. 4,301,530, Cl. 370-18.000.
Guyot, Joel; and Vernet, Jean-Louis, to Thomson-CSF. Formation of sonar channels by charge-coupled devices. 4,301,522, Cl. 367-123.000.
GX-Holding AG: *See—*
Jaeger, Walter, 4,301,467, Cl. 358-41.000.
Gyure, Sandor; and Szwarc, Joseph M., to Becton, Dickinson and Company. Syringe package with evidence of opening. 4,300,678, Cl. 206-364.000.
H. Lundbeck & Co. A/S: *See—*
Krogsgaard-Larsen, Povl, 4,301,287, Cl. 546-19.000.
Haag, George A.; Fogg, O. Douglas; Greenley, Gordon A.; Shepard, Steve A.; and Terry, F. Duncan, to Hewlett-Packard Company. Logic state analyzer with restart and state occurrence qualification. 4,301,513, Cl. 364-900.000.
Haase, Michael A.; Miller, Edward B.; Eichelberger, Charles W.; Cutler, Scott E.; and Wojnarowski, Robert J., to General Electric Company. Method for cooking meat or poultry in thermal oven. 4,301,509, Cl. 364-557.000.
Haase, Thomas A.: *See—*
Pesa, Frederick A.; and Haase, Thomas A., 4,301,089, Cl. 260-465.100.
Pesa, Frederick A.; and Haase, Thomas A., 4,301,090, Cl. 260-465.400.
Habesch, Emil M., Jr.; and Rairden, John R., to General Electric Company. Mechanically alloyed powder process. 4,300,947, Cl. 75-0.50R.
Hachisuka, Takeji, to Kabushiki Kaisha Fujikoshi. Liquid phase sintered dense composite bodies and method for producing the same. 4,300,951, Cl. 75-236.000.
Haemmerleag: *See—*
Haenni, Eduard, 4,300,420, Cl. 83-92.000.
Haemonetics Corporation: *See—*
Latham, Allen, Jr., 4,300,717, Cl. 233-1.00A.
Haenni, Eduard, to Haemmerleag. Apparatus for cutting of sheet metal sheets and stacking the separated sheet metal sections. 4,300,420, Cl. 83-92.000.
Hafner, Erich; and Ney, Robert J., to United States of America, Army. High vacuum continuous cycle fabrication facility. 4,300,272, Cl. 29-25.350.
Hagedorn, Myrna L.: *See—*
Sprecker, Mark A.; Sanders, James M.; Schreiber, William L.; Watkins, Hugh; Vinals, Joaquin F.; Shuster, Edward J.; O'-Rourke, Thomas J.; Hagedorn, Myrna L.; and Klemarczyk, Philip, 4,301,302, Cl. 568-373.000.
Hagen, Helmut; Pommer, Ernst-Heinrich; Reuther, Wolfgang; and Ziegler, Hans, to BASF Aktiengesellschaft. Thiolphosphoric acid-S-4-nitro-2-trichloromethylphenyl esters as fungicides. 4,301,157, Cl. 424-218.000.
Hahn, Bernard: *See—*
Neininger, Gunter; and Hahn, Bernard, 4,301,453, Cl. 343-9.00R.
Halila, Herbert: *See—*
Hollis, Nicholas E.; Swift, Michael P.; and Halila, Herbert, 4,300,774, Cl. 277-12.000.
Halilovic, Esref; and Radisic, Branko. Streaming vibrator with an uninterrupted rolling area and an unloaded blade. 4,300,843, Cl. 366-125.000.
Hall, John B.: *See—*
Yoshida, Takao; and Hall, John B., 4,301,184, Cl. 426-534.000.
Haller, Ingo: *See—*
Regel, Erik; Buchel, Karl H.; Haller, Ingo; and Plempel, Manfred, 4,301,166, Cl. 424-269.000.
Hallmann, Melvin H.; and Stephens, Burr E., to General Motors Corporation. Automatic tension control mechanism for a drive belt. 4,300,890, Cl. 474-110.000.
Hamamoto, Yoshinobu: *See—*
Shoji, Koji; and Hamamoto, Yoshinobu, 4,301,393, Cl. 315-367.000.
Hamburger, Jean: *See—*
Bach, Jean-Francois; Dardenne, Mireille; Pleau, Jean-Marie; Hamburger, Jean; Bricas, Evanghelos; Martinez, Jean; Blanot, Didier; and Auger, Genevieve, 4,301,065, Cl. 260-112.50R.
Hamma, John: *See—*
Du Bois, R. Clark; and Hamma, John, 4,300,710, Cl. 226-74.000.
Hampton, John K.: *See—*
McKenny, Vernon G.; and Hampton, John K., 4,301,535, Cl. 371-21.000.
Hanamoto, Ben: *See—*
Jellinek, Hans H. G.; Frankenstein, Guenther E.; and Hanamoto, Ben, 4,301,208, Cl. 428-334.000.
Handal, Richard A. Resinous drumstick. 4,300,438, Cl. 84-422.00S.
Haneda, Tadayosi: *See—*
Yoshida, Hiroyuki; Akazawa, Toshitada; Haneda, Tadayosi; and Watanabe, Kenzi, 4,300,992, Cl. 204-242.000.
Hanlon, James H.: *See—*
Franz, Helmut; Hanlon, James H.; and Shick, Lloyd G., 4,301,197, Cl. 427-353.000.
Hanny, John F.: *See—*
Schuberth, Winfried; and Hanny, John F., 4,301,023, Cl. 252-299.700.
Hansel, William B.; and Smith, Earl W., to Sun Oil Company of Pennsylvania. Method for leakage measurement. 4,300,388, Cl. 73-49.200.
Hara, Hiroshi: *See—*
Nakamura, Kotaro; Suzuki, Yoshiaki; Hara, Hiroshi; Sawada, Satoru; and Oono, Shigeru, 4,301,223, Cl. 430-17.000.
Hara, Toshizo; and Yamada, Tsutomu, to Diesel Kiki Co., Ltd. Control apparatus for glow plugs provided for a diesel engine. 4,300,491, Cl. 123-179.0BG.
Harada, Fumio: *See—*
Hatada, Toshio; Senshu, Takao; Arai, Akira; Harada, Fumio; Matsuzaki, Atsushi; Futawatari, Hajime; Imaizumi, Yutaka; and Takeda, Sumiyoshi, 4,300,629, Cl. 165-151.000.
Harada, Yusuke: *See—*
Oi, Nobuhiro; Aoki, Buoya; Shinozaki, Teizo; Moro, Kanji; Matsunaga, Isao; Noto, Takao; Nebashi, Toshiyuki; Harada, Yusuke; Endo, Hisao; Kimura, Takao; Okazaki, Hiroshi; Ogawa, Haruki; and Shindo, Minoru, 4,301,161, Cl. 424-246.000.
Harman, Robert K.; and Maki, Melvin, to Control Data Canada, Ltd. Method of producing coaxial cable. 4,300,338, Cl. 57-3.000.
Harnden, John D., Jr.: *See—*
Bloomer, Milton D.; Harnden, John D., Jr.; and Deallenbach, Denise A., 4,300,392, Cl. 73-362.0AR.
Harnly, James M.; O'Haver, Thomas C.; Wolf, Wayne R.; and Golden, Bruce M., to United States of America, Agriculture. Method for background corrected simultaneous multielement atomic absorption analysis. 4,300,833, Cl. 356-307.000.
Harrington, Edward R.: *See—*
Marzocchi, Alfred; Roberts, Michael G.; Bolen, Charles E.; and Harrington, Edward R., 4,301,051, Cl. 260-28.5AS.
Harris Corporation: *See—*
Taylor, David L., 4,301,383, Cl. 307-585.000.
Harrison, James J.: *See—*
Beach, David L.; and Harrison, James J., 4,301,318, Cl. 585-526.000.
Harsch, Klaus: *See—*
Streit, Klaus; Buxmeyer, Walter; Schulzke, Peter; and Harsch, Klaus, 4,300,508, Cl. 123-490.000.
Hartley, E. Dale. Pressure regulator. 4,300,592, Cl. 137-505.250.
Hartman, Ernest L.: *See—*
Comparato, Joseph R.; Hartman, Ernest L.; Zielinski, Edward A.; and Myrick, David T., 4,300,458, Cl. 110-263.000.

Hartmann & Braun AG: *See*—
Bauer, Peter, 4,301,370, Cl. 250-435.000.
Hartmann, Josef: *See*—
Sutter, Hans P.; and Hartmann, Josef, 4,300,711, Cl. 226-97.000.
Hartmann, Joseph L.: *See*—
Ricciardi, Ronald J.; Ferrara, Angelo; and Hartmann, Joseph L., 4,301,510, Cl. 364-567.000.
Hartmann, Werner: *See*—
Muller, Rolf; Hartmann, Werner; and Kuca, Zdenek, 4,301,311, Cl. 568-719.000.
Hartness International, Inc.: *See*—
Hartness, Thomas S., 4,300,330, Cl. 53-539.000.
Hartness, Thomas S., to Hartness International, Inc. Bottle loading machine. 4,300,330, Cl. 53-539.000.
Hasebe, Masayuki, to Shimano Industrial Company, Limited. Hub for a two or three wheel vehicle. 4,300,804, Cl. 301-105.00B.
Hasegawa, Masayasu; Nishikawa, Hideo; and Yoshida, Kayoko, to Nippon Gohsei Kagaku Kogyo Kabushiki Kaisha. Antibacterial and antifungal composition. 4,301,162, Cl. 424-263.000.
Hasegawa, Shigekazu: *See*—
Katayama, Yoshiyuki; Hasegawa, Shigekazu; Okuyama, Shigeaki; and Nakamura, Norimi, 4,300,638, Cl. 172-10.000.
Hashimoto, Mitsuyoshi; Hosokawa, Kiyoshi; and Motegi, Tsuneo, to Toshiba Silicone Co., Ltd. Room temperature curing polysiloxane compositions. 4,301,269, Cl. 528-34.000.
Hashimoto, Toshio: *See*—
Takumi, Shizuo; Hashimoto, Toshio; and Akimoto, Fumio, 4,301,033, Cl. 252-448.000.
Hashiue, Masakazu, to Fuji Photo Film Co., Ltd. Shutter system for optical multi-lens scanner. 4,301,374, Cl. 250-566.000.
Haskell, Donald M.; and Farha, Floyd, Jr., to Phillips Petroleum Company. Method of producing high octane alkylate gasoline. 4,301,315, Cl. 585-304.000.
Hastrup, Niels E., to F. L. Smidth & Co. Method for purification of gases. 4,301,128, Cl. 423-242.000.
HAT-Hohmann GmbH & Co. Automations-Technik, Kommanditgesellschaft: *See*—
Priebs, Horst, 4,300,896, Cl. 493-419.000.
Hatada, Toshio; Senshu, Takao; Arai, Akira; Harada, Fumio; Matsuzaki, Atsushi; Futawatari, Hajime; Imaizumi, Yutaka; and Takeda, Sumiyoshi, to Hitachi, Ltd. Cross-fin tube type heat exchanger. 4,300,629, Cl. 165-151.000.
Hater, Martin; Meininghaus, Fritz; and Scheel, Rudiger, to Uhde GmbH. Method of processing waste sludge from wet phosphoric acid purification acid purification facilities. 4,300,939, Cl. 71-25.000.
Hatori, Minoru: *See*—
Hotta, Seiji; Kawahara, Hitoshi; Hatori, Minoru; and Koseki, Fumio, 4,301,227, Cl. 430-106.000.
Hattori, Tadashi; Takada, Shigetaka; Hayashi, Kenji; and Iwata, Toshiharu, to Nippon Soken, Inc. Air-fuel mixture ratio correcting system for carburetor. 4,300,490, Cl. 123-439.000.
Haubner, Georg; and Wesemeyer, Jurgen, to Robert Bosch GmbH. Input-output apparatus for a microprocessor. 4,301,504, Cl. 364-200.000.
Haug, Paul: *See*—
Grullmeier, Artur, 4,300,351, Cl. 60-560.000.
Haug, Werner: *See*—
Clemen, Rainer; Gschwendtner, Joerg; and Haug, Werner, 4,301,381, Cl. 307-475.000.
Haupt, Hans O.: *See*—
Zinn, Michael J.; Bremer, Robert C., Jr.; Williams, Lewis E.; and Haupt, Hans O., 4,300,383, Cl. 73-11.000.
Haury, Earl J.: *See*—
Graiff, Leonard B.; and Haury, Earl J., 4,300,494, Cl. 123-193.00H.
Hauth, Hartmut: *See*—
Pfaffli, Paul; and Hauth, Hartmut, 4,301,290, Cl. 546-143.000.
Havens Steel Company: *See*—
Rooney, Craig E., 4,300,320, Cl. 52-173.00R.
Hawkes, David W.; and Hutcheon, Ian C., to Measurement Technology Ltd. Electrical circuit testing. 4,301,403, Cl. 324-62.000.
Hawkins, Billy C.: *See*—
McKay, John; and Hawkins, Billy C., 4,300,526, Cl. 126-67.000.
Hayakawa, Yukio, to Nissan Motor Company, Ltd. System and method for controlling exhaust gas recirculation. 4,300,516, Cl. 123-571.000.
Hayashi, Hiroshi: *See*—
Sato, Haruhito; Ichikawa, Hiroshi; Hayashi, Hiroshi; and Kurisaki, Konomu, 4,301,043, Cl. 252-522.00A.
Hayashi, Kenji: *See*—
Hattori, Tadashi; Takada, Shigetaka; Hayashi, Kenji; and Iwata, Toshiharu, 4,300,490, Cl. 123-439.000.
Hayashi, Masayuki; Ifuku, Yasushi; Uchiyama, Hirofumi; Kaga, Yosimi; and Nakamori, Akifumi, to Mitsubishi Jukogyo Kabushiki Kaisha; and Prefectural Economic Federation of Agricultural Co-operatives. Apparatus for extracting pulp from citrus fruits. 4,300,448, Cl. 99-516.000.
Hayashida, Yoshihiro: *See*—
Kubota, Hitoshi; Hayashida, Yoshihiro; and Kutsuma, Hironori, 4,301,440, Cl. 340-59.000.
Hayes, Edward O., to National Research Development, Inc. Method for preparing a calcium carbide product. 4,301,133, Cl. 423-442.000.
Hayes, William V.: *See*—
Childress, David L.; and Hayes, William V., 4,301,036, Cl. 252-458.000.
Haynes, George R., to Shell Oil Company. Method of inhibiting lipogenesis. 4,301,172, Cl. 424-275.000.
Haynes, Joseph E. Hockey-type table game apparatus. 4,300,766, Cl. 273-85.00R.
Hayward, Gary G.: *See*—
Raymond, Samuel O.; and Hayward, Gary G., 4,300,654, Cl. 181-120.000.
Hazen, Gretz L., to DEC International, Inc. Apparatus for separating fines from whey. 4,300,445, Cl. 99-458.000.
Hazen, Gretz L., to DEC International, Inc. Apparatus for salting cheese. 4,300,446, Cl. 99-461.000.
Heard, Harold; and Wilt, Charles R., to Salem Corporation. Methods and apparatus for heating particulate material. 4,300,291, Cl. 34-10.000.
Hebeler, Harold H.: *See*—
Fernstrom, George A.; Hebeler, Harold H.; Lin, Perry H.; and Moneymaker, Robert R., 4,301,102, Cl. 264-151.000.
Heckel, Johann, to Daimler-Benz Aktiengesellschaft. Gas turbine with heat-insulating lining. 4,300,349, Cl. 60-39.51R.
Hedberg, Kirk G.: *See*—
Leir, Charles M.; Hedberg, Kirk G.; and Jacobson, Joel R., 4,301,288, Cl. 546-94.000.
Leir, Charles M.; and Hedberg, Kirk G., 4,301,289, Cl. 546-94.000.
Hefner, Robert E., Jr., to Dow Chemical Company, The. N-aminoethylpiperazine condensates for beneficiation of phosphate ore. 4,301,004, Cl. 209-166.000.
Heim, Ulrich: *See*—
Wiesner, Peter; and Heim, Ulrich, 4,300,384, Cl. 73-23.000.
Heinen, Helmut, to Reiners & Furst. Break-up roller for open-end spinning machine. 4,300,265, Cl. 19-112.000.
Heinrich, Wolfgang: *See*—
Egert, Klaus; Heinrich, Wolfgang; Lucas, Klaus; Kuhlbrodt, Klaus-Otto; Berger, Friedrich; Gohler, Peter; Schingnitz, Manfred; Gross, Manfred; Jegorow, Aleksander; Fedotov, Vasilij; Gavrilin, Vladimir; Gudymov, Ernest; Semenov, Vladimir; Achmatov, Igol; Majdurov, Nikolaj; and Abraamov, Evgenij, 4,300,913, Cl. 48-67.000.
Heinze, Christoph; Botsch, Franz; and Wolff, Horst, to Hoechst Aktiengesellschaft. Process and device for continuously treating with gases aqueous dispersions of polyvinyl chloride. 4,301,275, Cl. 528-500.000.
Heismann, Richard A., to Outboard Marine Corporation. Snow thrower impeller assembly. 4,300,295, Cl. 37-43.00D.
Helbig, Rainer J.: *See*—
Leeb, Richard; and Helbig, Rainer J., 4,301,160, Cl. 424-241.000.
Hellman, Bert G. H.: *See*—
Wiberger, Lars I.; Ronnow, Peter H.; Tengblad, Per F.; and Hellman, Bert G. H., 4,300,632, Cl. 166-246.000.
Helm, James D.; and Gellerson, Walter G., to Decoto Aircraft, Inc. Locking device. 4,300,664, Cl. 188-265.000.
Hendberg, Bernt: *See*—
Funke, Gustaf; and Hendberg, Bernt, 4,300,704, Cl. 221-301.000.
Hendrick, Pete; and Arias, James J. Luggage carrier for a three-wheel motorcycle. 4,300,706, Cl. 224-31.000.
Henmi, Zenzo: *See*—
Suzuki, Yuichi; Okada, Masanori; and Henmi, Zenzo, 4,300,958, Cl. 148-120.000.
Henry, Robert L.; and Skinner, Frank R., to General Electric Company. Compact dressing tool. 4,300,522, Cl. 125-11.00R.
Henry, Roger J., to Don Kremer Lincoln-Mercury, Inc. Ball joint repair part. 4,300,849, Cl. 403-11.000.
Henshaw, Harry: *See*—
Wilkinson, Wilfred H.; and Henshaw, Harry, 4,300,868, Cl. 415-137.000.
Herbert Kannegiesser GmbH & Co.: *See*—
Jurascheck, Richard; and Nolte, Karl-Heinz, 4,300,476, Cl. 118-694.000.
Hercules Incorporated: *See*—
Williams, Rafelix A., 4,300,961, Cl. 149-10.000.
Herman, Ralph, to RCA Corporation. Printed circuit board support structure. 4,301,495, Cl. 361-415.000.
Herrera, Jose E.: *See*—
Sanchez, Moises G.; and Herrera, Jose E., 4,301,037, Cl. 252-462.000.
Herrmann, Heinz; and Winkelmann, Detlef, to Hoechst Aktiengesellschaft. Alcohol soluble, organic photoconductor containing polymeric protective layer on electrophotographic material. 4,301,225, Cl. 430-66.000.
Herwick, Dale L.; and Adams, Michael W. Equipment security device. 4,300,371, Cl. 70-58.000.
Heshmat, Hooshang, to Mechanical Technology Incorporated. Multistage support element for compliant hydrodynamic bearings. 4,300,806, Cl. 308-9.000.
Hessberg, Sigfried; and Dold, Werner, to Intermedicat GmbH. Portable infusion apparatus. 4,300,554, Cl. 128-218.00A.
Hetzel, Henry T.; and Tremblay, Michael A., to Hewlett-Packard Company. Controllable cursor vacuum hold down. 4,301,326, Cl. 178-18.000.
Hewlett-Packard Company: *See*—
Haag, George A.; Fogg, O. Douglas; Greenley, Gordon A.; Shepard, Steve A.; and Terry, F. Duncan, 4,301,513, Cl. 364-900.000.
Hetzel, Henry T.; and Tremblay, Michael A., 4,301,326, Cl. 178-18.000.
Keil, Ronald W., 4,300,844, Cl. 400-120.000.
Higginbotham, John D.: *See*—
van der Loo, Henricus E.; Wiener, Charles; and Higginbotham, John D., 4,300,576, Cl. 131-335.000.
Highsmith, James L., Jr., to El-Trol, Inc. Roving frame stop apparatus. 4,300,342, Cl. 57-81.000.

Hill, Claudette D. Magnetic pick up attachment for vacuum cleaners. 4,300,260, Cl. 15-339.000.
Hill, Jeremy R.; and Meyer, Allen E., to United States Surgical Corporation. Liquid conductivity measuring system and sample cards therefor. 4,301,412, Cl. 324-442.000.
Hill, Jeremy R.; and Meyer, Allen E., to United States Surgical Corporation. Disposable sample card and method of making same. 4,301,414, Cl. 324-446.000.
Hillekamp, Klaus: *See*—
Schmidt, Rudiger; Steininger, Franz; and Hillekamp, Klaus, 4,300,915, Cl. 48-197.00R.
Hilson, David G.: *See*—
Johnson, Gary W.; and Hilson, David G., 4,301,439, Cl. 338-195.000.
Hines, Charles E., to Outboard Marine Corporation. Power rake foot guard. 4,300,334, Cl. 56-17.400.
Hinger, Fred D.; and Hinger, William D., to Hinger Touch-Tone Corp. Sectionalized musical drums. 4,300,437, Cl. 84-411.00R.
Hinger Touch-Tone Corp.: *See*—
Hinger, Fred D.; and Hinger, William D., 4,300,437, Cl. 84-411.00R.
Hinger, William D.: *See*—
Hinger, Fred D.; and Hinger, William D., 4,300,437, Cl. 84-411.00R.
Hino, Kazuhiko; and Mizutani, Masami, to Fuji Electric Co., Ltd. Flat wall type refrigerated and chilled open display case. 4,300,358, Cl. 62-256.000.
Hiraga, Ryozo: *See*—
Suzuki, Akiyoshi; Hiraga, Ryozo; and Yoshinari, Hideki, 4,301,363, Cl. 250-216.000.
Hirano, Masayoshi: *See*—
Okano, Hiroshi; and Hirano, Masayoshi, 4,300,387, Cl. 73-460.000.
Hirata, Hiromasa, to Ishikawajima-Harima Jukogyo Kabushiki Kaisha. Device for wrapping strip partly around working rolls of rolling-mill stand. 4,300,377, Cl. 72-250.000.
Hirata, Shinji, to West Electric Co., Ltd. Electronic flash system capable of automatic flash duration control. 4,301,392, Cl. 315-241.00P.
Hirayama, Takao; Fujishima, Minoru; Kaneko, Hisasi; and Tanaka, Shigeyoshi, to Hitachi Chemical Company, Ltd. Water-dispersed resin composition. 4,301,048, Cl. 260-22.0CQ.
Hirose, Katsumi: *See*—
Ogata, Masaru; Matsumoto, Hiroshi; Hirose, Katsumi; and Eigyo, Masami, 4,301,159, Cl. 424-230.000.
Hiroshi, Tobitani: *See*—
Akira, Tsuzuki; and Hiroshi, Tobitani, 4,300,986, Cl. 202-241.000.
Hitachi Chemical Company, Ltd.: *See*—
Hirayama, Takao; Fujishima, Minoru; Kaneko, Hisasi; and Tanaka, Shigeyoshi, 4,301,048, Cl. 260-22.0CQ.
Hitachi Denshi Kabushiki Kaisha: *See*—
Takemoto, Iwao; Kubo, Masaharu; Ohba, Shinya; Tanaka, Shuhei; and Aoki, Masakazu, 4,301,477, Cl. 358-213.000.
Hitachi, Ltd.: *See*—
Eifuku, Yoshiaki; Mimura, Kazunobu; and Okada, Yasuyuki, 4,301,514, Cl. 364-900.000.
Fukinuki, Takahiko; Yoshigi, Hiroshi; and Shimazaki, Yumiko, 4,301,479, Cl. 358-257.000.
Furuhata, Takashi; and Kobori, Yasunori, 4,301,395, Cl. 318-314.000.
Hatada, Toshio; Senshu, Takao; Arai, Akira; Harada, Fumio; Matsuzaki, Atsushi; Futawatari, Hajime; Imaizumi, Yutaka; and Takeda, Sumiyoshi, 4,300,629, Cl. 165-151.000.
Otsuki, Keizo; Mochizuki, Hidetoshi; Suzuki, Akira; Adachi, Yoshio; Kosaka, Hideki; and Murakami, Gen, 4,301,464, Cl. 357-70.000.
Suenaga, Masahide; Shimizu, Noboru; Kudo, Mitsuhiro; Yamaguchi, Hiroshi; and Mitani, Masao, 4,301,353, Cl. 219-121.0LJ.
Takemoto, Iwao; Kubo, Masaharu; Ohba, Shinya; Tanaka, Shuhei; and Aoki, Masakazu, 4,301,477, Cl. 358-213.000.
Tsunoda, Yoshito; Miyauchi, Toshimitsu; Shigematsu, Kazuo; and Tatsuno, Kimio, 4,301,527, Cl. 369-45.000.
Yoshioka, Masahiro, 4,300,808, Cl. 308-76.000.
Hlaban, James J.: *See*—
Kaczmarzyk, Leonard M.; Hlaban, James J.; and Jackson, David M., 4,300,561, Cl. 128-285.000.
Hmelovsky, Michael W., to Otis Elevator Company. Elevator door stall mode with hysteresis. 4,300,661, Cl. 187-29.00R.
Hmelovsky, Michael W., to Otis Elevator Company. Elevator door motor compensations. 4,300,662, Cl. 187-29.00R.
Hmelovsky, Michael W.; and Games, John E., to Otis Elevator Company. Elevator door motion mode control. 4,300,663, Cl. 187-29.00R.
Hochstrasser, Otto; Ruby, William S.; and Madaffore, Frank V., to Brown Boveri Corporation. Cooling of electrical furnaces. 4,301,320, Cl. 13-32.000.
Hochstrasser, Walter P.; and Schumacher, Georges, to Mefina S.A. Ironing press. 4,300,296, Cl. 38-17.000.
Hodge, Ronald F.; and Fears, George D. Grass seed planter having fluid injection soil opener. 4,300,461, Cl. 111-6.000.
Hodogaya Chemical Co., Ltd.: *See*—
Yoshida, Hiroyuki; Akazawa, Toshitada; Haneda, Tadayosi; and Watanabe, Kenzi, 4,300,992, Cl. 204-242.000.
Hoechst Aktiengesellschaft: *See*—
Bauer, Gunther; Burghardt, Wolfgang; and Moller, Hilmar, 4,300,344, Cl. 57-288.000.
Heinze, Christoph; Botsch, Franz; and Wolff, Horst, 4,301,275, Cl. 528-500.000.
Herrmann, Heinz; and Winkelmann, Detlef, 4,301,225, Cl. 430-66.000.
Jones, Barry M., 4,301,047, Cl. 260-17.40R.
Leeb, Richard; and Helbig, Rainer J., 4,301,160, Cl. 424-241.000.
Nahm, Helmut; and Granzer, Ernold, 4,301,295, Cl. 560-62.000.
Uhlig, Fritz, 4,301,234, Cl. 430-325.000.
Hoechst-Roussel Pharmaceuticals, Incorporated: *See*—
Martin, Lawrence L.; and Worm, Manfred, 4,301,292, Cl. 548-239.000.
Hoffman, Robert C.; Kruse, Richard H.; and Martin, Donald P., to Qwint Systems, Inc. Teleprinter having single belt carriage and ribbon drive system. 4,300,847, Cl. 400-196.100.
Hoffman, Robert C.: *See*—
Martin, Donald P.; Hoffman, Robert C.; and Kruse, Richard H., 4,300,845, Cl. 400-124.000.
Hoffmann-La Roche Inc.: *See*—
Despreaux, Carl; Narwid, Thomas A.; Palleroni, Norberto J.; and Uskokovic, Milan R., 4,301,246, Cl. 435-58.000.
Fahrenholtz, Kenneth E.; Guthrie, Robert W.; Kierstead, Richard W.; and Tilley, Jefferson W., 4,301,300, Cl. 564-92.000.
Franklin, Michael L.; and Jeunelot, Charles W., 4,300,689, Cl. 209-524.000.
Schroeder, William, Jr.; and Fink, Raymond N., 4,300,612, Cl. 150-52.00R.
Hoffmann, Werner; von Fraunberg, Karl; and Baumann, Manfred, to BASF Aktiengesellschaft. Musk-like scents and their manufacture. 4,301,303, Cl. 568-375.000.
Hoffmann, Wolfgang, to B & H Manufacturing Company, Inc. Base cup applying apparatus and method. 4,300,966, Cl. 156-156.000.
Hold, Peter; and Tadmor, Zehev, to USM Corporation. Seals for rotary processor. 4,300,842, Cl. 366-99.000.
Holland, Marion D.: *See*—
Woodward, James C.; and Holland, Marion D., 4,300,261, Cl. 15-345.000.
Hollis, Nicholas E.; Swift, Michael P.; and Halila, Herbert, to General Electric Company. Removable sealing plug for spaced apart wall structure. 4,300,774, Cl. 277-12.000.
Holmes, Jones F.; and Jacob, Ralph L., to Oregon Graduate Center for Study and Research. Electro-optical scanning system with self-adaptive scanning capability. 4,300,836, Cl. 356-376.000.
Holscher, Donald J.; and French, Donald E., to Hughes Aircraft Company. Moving target indicator system utilizing charge coupled device. 4,301,471, Cl. 358-105.000.
Holsiepe, Dietmar: *See*—
Goldmann, Wolf; Michaelsen, Dieter; Dreyer, Dieter; Holsiepe, Dietmar; Tiggesbaumker, Peter; Bauer, Klaus; Durr, Manfred; and Mersmann, Heinz G., 4,300,879, Cl. 432-14.000.
Holter, John W. Ventilating hatch assembly. 4,300,440, Cl. 98-37.000.
Holzwarth, Robert W., to Model A and Model T Motor Car Reproduction Corp., The. Vehicle plastic door construction. 4,300,315, Cl. 49-501.000.
Honda Giken Kogyo Kabushiki Kaisha: *See*—
Sakata, Mamoru, 4,300,649, Cl. 180-55.000.
Honda, Toshio; Ogawa, Masao; Fukuura, Yukio; Ishikawa, Hikaru; Naito, Kazuo; Akiyama, Setsuo; and Tanuma, Itsuo, to Bridgestone Tire Company Limited. Method of bonding vulcanized rubber to resin. 4,300,970, Cl. 156-244.110.
Hooker Chemicals & Plastics Corp.: *See*—
Buckholtz, Harry E.; Moritz, Joseph J.; and Wisnouskas, Joseph S., 4,301,014, Cl. 210-721.000.
Hoover, Maurice W., to North Carolina State University at Raleigh. Nut blancher. 4,300,447, Cl. 99-516.000.
Horlenko, Theodore; Paul, James L.; and Gordon, James W., to Celanese Corporation. Light ends recovery in ethyl acrylate process. 4,301,298, Cl. 560-218.000.
Hornsey, Derek: *See*—
Savard, Guy; Lee, Robert G. H.; and Hornsey, Derek, 4,301,007, Cl. 210-96.100.
Horodysky, Andrew G.; and Landis, Phillip S., to Mobil Oil Corporation. Mercaptothiadiazole adducts of unsaturated esters and lubricants containing same. 4,301,019, Cl. 252-49.600.
Horsewell, Henry G.; and Phelpstead, James W. P., to British-American Tobacco Company Limited. Tobacco-smoke filters. 4,300,577, Cl. 131-334.000.
Hosoe, Kazuya: *See*—
Sakane, Toshio; Hosoe, Kazuya; Kinoshita, Takao; Tsunekawa, Tokuichi; and Kawabata, Takashi, 4,301,478, Cl. 358-227.000.
Hosokawa, Kiyoshi: *See*—
Hashimoto, Mitsuyoshi; Hosokawa, Kiyoshi; and Motegi, Tsuneo, 4,301,269, Cl. 528-34.000.
Hosoya, Hiroshi: *See*—
Sawaguchi, Masahiro; Sasaki, Masami; Hosoya, Hiroshi; and Oka, Toshiichiro, 4,301,484, Cl. 360-96.600.
Hospital Physics Oy: *See*—
Riihimaki, Esko, 4,301,368, Cl. 250-385.000.
Hotta, Seiji; Kawahara, Hitoshi; Hatori, Minoru; and Koseki, Fumio, to Sumitomo Chemical Company, Limited. Electrophotographic liquid developer. 4,301,227, Cl. 430-106.000.
Houlihan, William J., to Sandoz, Inc. 1-Dimethyl substituted alkyl-2-or 4-substituted phenylimidazoles. 4,301,170, Cl. 424-273.00R.
Houser, William; and Muntzer, John. Apparatus for loosening vehicle wheel lugs. 4,300,412, Cl. 81-53.00R.
Howard, William E. Spring type exercising device. 4,300,761, Cl. 272-134.000.
Hsieh, Shuang-shii, to Tennessee Valley Authority. Phosphate flotation with dibasic acids. 4,301,003, Cl. 209-166.000.

Hsu, Sam S. Radiation dosimeter. 4,301,367, Cl. 250-370.000.
Hsu, Te-Chi. Folding container. 4,300,695, Cl. 220-6.000.
Hudgin, Richard H. Electrical screen. 4,300,306, Cl. 43-112.000.
Hudson, Walter A., to AM International, Inc. Photocopy machines. 4,300,832, Cl. 355-106.000.
Huffman, Ronald E., to KV33 Corporation. Electrically heated wax spatula using a diode as the heating element. 4,301,357, Cl. 219-229.000.
Hughes Aircraft Company: *See—*
Byrne, Allan B.; Otis, Richard G.; and Robinson, Stephen A., 4,300,737, Cl. 244-158.00R.
Holscher, Donald J.; and French, Donald E., 4,301,471, Cl. 358-105.000.
Minning, Charles P.; and Fleischman, George L., 4,300,624, Cl. 165-32.000.
Seliger, Robert L.; and Dumage, Laurence C., 4,301,391, Cl. 315-111.310.
Williams, Ronald L., 4,301,354, Cl. 219-121.0ED.
Hui, Benjamin C.: *See—*
Wade, Robert C.; and Hui, Benjamin C., 4,301,129, Cl. 423-284.000.
Hunn, Douglas C. Cane holder. 4,300,742, Cl. 248-360.000.
Hunter, William R.: *See—*
Mullich, Richard O.; and Hunter, William R., 4,300,374, Cl. 70-389.000.
Hurwitz, Peter A.; and Loersch, Joseph F., to United Technologies Corporation. Impermeable electroform for hot isostatic pressing. 4,300,959, Cl. 148-127.000.
Hussain, Syed N.: *See—*
Braksmayer, Diza P.; and Hussain, Syed N., 4,301,057, Cl. 260-37.00N.
Hutcheon, Ian C.: *See—*
Hawkes, David W.; and Hutcheon, Ian C., 4,301,403, Cl. 324-62.000.
Hutchinson, Ray A. J.: *See—*
Bunyea, John R.; Ferrill, Jess B.; Hutchinson, Ray A. J.; and Sergeant, Ronald G., 4,300,282, Cl. 29-751.000.
Hutchison, John B., to BICC Limited. Sealing conduits. 4,301,325, Cl. 174-76.000.
Hutson, Duane. Cane fishing pole tip. 4,300,303, Cl. 43-24.000.
Huttenes-Albertus Chemische Werke GmbH: *See—*
Torbus, Marek; and Vujevic, Aleksandar, 4,301,271, Cl. 528-85.000.
Huwe, Maurice K. Drop marker. 4,300,469, Cl. 116-209.000.
I.S.R. Holding, S.a.r.l.: *See—*
Moore, John D.; and Feast, Alan A. J., 4,301,264, Cl. 526-86.000.
Ibe, Kazuhiko; and Fujita, Kenji, to Sumitomo Heavy Industries, Ltd. Apparatus for cleaning coke oven door. 4,300,257, Cl. 15-93.00A.
Ible, Donald G., to Firestone Tire & Rubber Company, The. Extrusion die for forming composite rubber-cord strip. 4,300,878, Cl. 425-114.000.
Ichijima, Seiji; and Furutachi, Nobuo, to Fuji Photo Film Co., Ltd. Process and material for forming color photographic image. 4,301,235, Cl. 430-387.000.
Ichikawa, Hiroki, to Olympus Optical Co., Ltd. Tape recorder. 4,300,735, Cl. 242-201.000.
Ichikawa, Hiroshi: *See—*
Sato, Haruhito; Ichikawa, Hiroshi; Hayashi, Hiroshi; and Kurisaki, Konomu, 4,301,043, Cl. 252-522.00A.
Ick, Jurgen: *See—*
Wagner, Kuno; Ick, Jurgen; and Balle, Gerhard, 4,301,262, Cl. 525-509.000.
Ida, Hideaki; and Fujiwara, Toshihide, to Olympus Optical Co., Ltd. Sample tray feeding apparatus for use with an automated analyzer. 4,301,116, Cl. 422-65.000.
Idemitsu Kosan Company Limited: *See—*
Sato, Haruhito; Ichikawa, Hiroshi; Hayashi, Hiroshi; and Kurisaki, Konomu, 4,301,043, Cl. 252-522.00A.
Idota, Yoshio; and Yamada, Minoru, to Fuji Photo Film Co., Ltd. Photographic bleach solutions. 4,301,236, Cl. 430-393.000.
Ifuku, Yasushi: *See—*
Hayashi, Masayuki; Ifuku, Yasushi; Uchiyama, Hirofumi; Kaga, Yosimi; and Nakamori, Akifumi, 4,300,448, Cl. 99-516.000.
Iida, Tetsuya: *See—*
Suzuki, Yasoji; and Iida, Tetsuya, 4,301,427, Cl. 331-111.000.
Iino, Yasuo: *See—*
Kametani, Yoshiya; and Iino, Yasuo, 4,301,297, Cl. 560-217.000.
Ikeda, Masaki, to Tomy Kogyo Co., Inc. Toy vehicle capable of traveling on both its top and bottom surfaces. 4,300,308, Cl. 46-206.000.
Ikkatai, Mitsuo: *See—*
Nozawa, Koji; Takegami, Norio; Mizukoshi, Yukio; and Ikkatai, Mitsuo, 4,300,668, Cl. 192-53.00F.
Illinois Tool Works Inc.: *See—*
Klygis, Mindaugas J.; and Benno, Edward L., 4,300,681, Cl. 206-428.000.
Peterson, Francis C., 4,300,745, Cl. 248-546.000.
Ilzig, Frank: *See—*
Seltenheim, Volker; Schubert, August; Paschakarnis, Peter; Vonderau, Josef; Ilzig, Frank; Frosch, Walter; and Fuglein, Egon, 4,301,205, Cl. 428-127.000.
Imaizumi, Yutaka: *See—*
Hatada, Toshio; Senshu, Takao; Arai, Akira; Harada, Fumio; Matsuzaki, Atsushi; Futawatari, Hajime; Imaizumi, Yutaka; and Takeda, Sumiyoshi, 4,300,629, Cl. 165-151.000.
Imazaki, Hideyuki; Fujikawa, Masazumi; and Kariya, Hiromitsu, to Nitto Kasei Co., Ltd.; and Kanesho Co., Ltd. Horticultural composition and method for controlling plant mites. 4,301,173, Cl. 424-288.000.
Imed Corporation: *See—*
Cannon, Raymond E., 4,300,552, Cl. 128-214.00E.
Immer, Hans U.: *See—*
Bellini, Francesco; and Immer, Hans U., 4,301,066, Cl. 260-112.5LH.
Imperial Chemical Industries Limited: *See—*
Barnes, John G.; and Murray, Charles R., 4,300,892, Cl. 493-193.000.
Bye, Ashley D., 4,301,265, Cl. 526-140.000.
Caunt, Anthony D.; and Gavens, Paul D., 4,301,029, Cl. 252-429.00B.
Connor, Herbert G., 4,300,902, Cl. 8-529.000.
Imura, Toshinori: *See—*
Yamanaka, Akira; and Imura, Toshinori, 4,300,823, Cl. 354-25.000.
Indian Head Inc.: *See—*
Wozniak, Glenn A.; Rady, Robert R.; and Pate, Harold T., 4,300,425, Cl. 83-468.000.
Ingelstrom, Nils A.; and Akesson, Leif A. E., to Sandvik Aktiebolag. Cemented hard metal. 4,300,952, Cl. 75-238.000.
Inmont Corporation: *See—*
Schefbauer, Rupert J., 4,301,055, Cl. 260-33.60R.
Inomata, Jihei: *See—*
Kameyama, Akinori; Saito, Hiroyasu; and Inomata, Jihei, 4,301,263, Cl. 526-68.000.
Inoue-Japax Research Incorporated: *See—*
Inoue, Kiyoshi, 4,301,349, Cl. 219-69.00W.
Inoue, Kimio: *See—*
Sato, Norimoto; Miyaoka, Minoru; Yamasaki, Shin; Inoue, Kimio; Kuriyama, Akimasa; Fukui, Tsugushi; and Asai, Toshihiro, 4,300,838, Cl. 366-84.000.
Inoue, Kiyoshi, to Inoue-Japax Research Incorporated. Electrical machining apparatus for forming a three-dimensional surface contour in a workpiece. 4,301,349, Cl. 219-69.00W.
Inoue, Shigeru; and Ono, Hiroshi, to Toyo Engineering Corporation. Synthesis of urea. 4,301,299, Cl. 564-67.000.
Institut Merieux: *See—*
Boucherle, Andre L.; and Viallet, Marie-Pierre D., 4,301,167, Cl. 424-270.000.
Instytut Ciezkiej Syntezy Organicznej "Blachownia": *See—*
Kiedik, Maciej; Kolt, Jozef; Czyz, Jerzy; Grzywa, Edward; Niezgoda, Anna; and Terelak, Kazimierz, 4,301,305, Cl. 568-727.000.
Intermedicat GmbH: *See—*
Hessberg, Sigfried; and Dold, Werner, 4,300,554, Cl. 128-218.00A.
International Business Machines Corp.: *See—*
Beck, Vernon D.; Piggin, Bruce P.; and Uber, Arthur E., III, 4,301,389, Cl. 313-411.000.
Clemen, Rainer; Gschwendtner, Joerg; and Haug, Werner, 4,301,381, Cl. 307-475.000.
Johari, Girish C., 4,301,497, Cl. 363-21.000.
Kumar, Ananda H.; McMillan, Peter W.; and Tummala, Rao R., 4,301,324, Cl. 174-68.500.
Lee, Hsing-San, 4,301,519, Cl. 365-189.000.
Wind, Robert A.; and Yannoni, Costantino S., 4,301,410, Cl. 324-307.000.
International Flavors & Fragrances Inc.: *See—*
Sprecker, Mark A.; Schmitt, Frederick L.; Vock, Manfred H.; Vinals, Joaquin F.; and Kiwala, Jacob, 4,301,018, Cl. 252-8.600.
Sprecker, Mark A.; Schmitt, Frederick L.; Vock, Manfred H.; Vinals, Joaquin F.; and Kiwala, Jacob, 4,301,022, Cl. 252-174.110.
Sprecker, Mark A.; Schmitt, Frederick L.; Vock, Manfred H.; Vinals, Joaquin F.; and Kiwala, Jacob, 4,301,024, Cl. 252-301.310.
Sprecker, Mark A.; Sanders, James M.; Schreiber, William L.; Watkins, Hugh; Vinals, Joaquin F.; Shuster, Edward J.; O'Rourke, Thomas J.; Hagedorn, Myrna L.; and Klemarczyk, Philip, 4,301,302, Cl. 568-373.000.
Sprecker, Mark A.; Schmitt, Frederick L.; Vock, Manfred H.; Vinals, Joaquin F.; and Kiwala, Jacob, 4,301,309, Cl. 568-826.000.
Wiegers, Wilhelmus J.; Sprecker, Mark A.; Watkins, Hugh; Vock, Manfred H.; and Schmitt, Frederick L., 4,301,076, Cl. 260-345.200.
Yoshida, Takao; and Hall, John B., 4,301,184, Cl. 426-534.000.
International Packings Corporation: *See—*
Gagne, Roger O., 4,300,778, Cl. 277-153.000.
International Standard Electric Corporation: *See—*
Neininger, Gunter; and Hahn, Bernard, 4,301,453, Cl. 343-9.00R.
International Telephone and Telegraph Corporation: *See—*
Schwarz, Albrecht, 4,301,496, Cl. 363-17.000.
Interox Chemicals Ltd.: *See—*
Burkin, Alfred R.; and Monhemius, Andrew J., 4,301,125, Cl. 423-150.000.
Inuyama, Hisao: *See—*
Kasai, Isamu; Tomiita, Kazuo; and Inuyama, Hisao, 4,300,345, Cl. 57-290.000.
Inuzuka, Yoichi: *See—*
Funatsu, Takenori; Maejima, Masuhiko; Inuzuka, Yoichi; and Tsuji, Kosaku, 4,301,049, Cl. 260-23.0AR.
Irvin, Ronald D., to Quaker Oats Company, The. Drive control mechanism for a phonograph. 4,301,529, Cl. 369-267.000.
Isago, Kouki, to Ricoh Company, Ltd. Slit exposure type illumination apparatus. 4,300,831, Cl. 355-67.000.
Isayama, Takuro; Komai, Hiromichi; Yamazaki, Hiroshi; and Sato, Tsutomu, to Ricoh Company, Ltd. Ink ejection apparatus comprising entrained air removal means. 4,301,459, Cl. 346-140.00R.

Ishida, Yoshiyuki; and Satoh, Seikoh, to Nissan Motor Company, Limited. Fuel pressure regulator of fuel injection system. 4,300,510, Cl. 123-512.000.
Ishiguro, Jiro: *See—*
Koodo, Teruhisa; Ishiguro, Jiro; and Watanabe, Nobuatsu, 4,301,026, Cl. 252-400.00R.
Ishii, Tadashi. Gong striking mechanism. 4,301,448, Cl. 340-392.000.
Ishikawa, Hikaru: *See—*
Honda, Toshio; Ogawa, Masao; Fukuura, Yukio; Ishikawa, Hikaru; Naito, Kazuo; Akiyama, Setsuo; and Tanuma, Itsuo, 4,300,970, Cl. 156-244.110.
Ishikawajima-Harima Jukogyo Kabushiki Kaisha: *See—*
Hirata, Hiromasa, 4,300,377, Cl. 72-250.000.
Isogai, Kiyoshi; and Sugaya, Kazuyoshi, to Toyota Jidosha Kogyo Kabushiki Kaisha. Ignition coil device attaching construction. 4,300,519, Cl. 123-647.000.
Istituto de Angeli S.p.A.: *See—*
Pala, Gianfranco; and Cereda, Enzo, 4,301,177, Cl. 424-319.000.
Ito, Hiroko: *See—*
Koiso, Junichi; and Ito, Hiroko, 4,300,757, Cl. 271-207.000.
Ito, Takashi; and Kamogawa, Nin-ichi, to Konishiroku Photo Industry Co., Ltd. Heat roller type fixing apparatus for electrophotographic copying machine. 4,301,359, Cl. 219-469.000.
Iwakiri, Norio: *See—*
Sakakino, Takahiro; and Iwakiri, Norio, 4,301,344, Cl. 200-314.000.
Iwasa, Hitoo: *See—*
Koike, Susumu; and Iwasa, Hitoo, 4,300,960, Cl. 148-171.000.
Iwashita, Yuji; and Ajisaka, Katsumi, to Ajinomoto Company, Incorporated. Blood substitute containing modified hemoglobin. 4,301,144, Cl. 424-78.000.
Iwata, Toshiharu: *See—*
Hattori, Tadashi; Takada, Shigetaka; Hayashi, Kenji; and Iwata, Toshiharu, 4,300,490, Cl. 123-439.000.
J. G. Anschutz GmbH: *See—*
Anschutz, Dieter; and Straub, Dieter, 4,300,302, Cl. 42-73.000.
Jack A. Burch Ltd.: *See—*
Burch, Jack A., 4,301,187, Cl. 427-45.100.
Jackson, David M.: *See—*
Kaczmarzyk, Leonard M.; Hlaban, James J.; and Jackson, David M., 4,300,561, Cl. 128-285.000.
Jackson, Harold P., to McDonough Power Equipment, Division of Fuqua Industries Inc. Safety control for riding lawn mower. 4,300,332, Cl. 56-11.300.
Jackson, James A., Sr.: *See—*
Jones, George M., 4,300,853, Cl. 404-92.000.
Jackson, Roy J., to Shell Oil Company. Process for stabilizing polyester compositions. 4,301,261, Cl. 525-507.000.
Jacob, Ralph L.: *See—*
Holmes, Jones F.; and Jacob, Ralph L., 4,300,836, Cl. 356-376.000.
Jacobson, Joel R.: *See—*
Leir, Charles M.; Hedberg, Kirk G.; and Jacobson, Joel R., 4,301,288, Cl. 546-94.000.
Jacquemin, Claude: *See—*
Puyhaubert, Jean; and Jacquemin, Claude, 4,301,431, Cl. 333-141.000.
Jacquet, Raymond, to Thomson-CSF. Isolated D.C. voltage regulating apparatus. 4,301,502, Cl. 363-79.000.
Jacyno, Henry, to Singer Company, The. By-pass valve for automotive air conditioning system. 4,300,357, Cl. 62-239.000.
Jade Corporation, The: *See—*
Keizer, Alan S.; and Brown, Donald B., 4,300,715, Cl. 228-180.00A.
Jaeger, Walter, to GX-Holding AG. Process for the optoelectronic transmission of an image. 4,301,467, Cl. 358-41.000.
Janetzky, Dittmar, to Siemens Aktiengesellschaft. Arrangement for transmitting digital data signals. 4,301,532, Cl. 370-85.000.
Janome Sewing Machine Co., Ltd.: *See—*
Morimoto, Shuzo, 4,300,463, Cl. 112-225.000.
Jansen, Augustinus M.; and Groot, Arien, to NCR Corporation. Quadriphase differential demodulator. 4,301,417, Cl. 329-50.000.
Jarrett, Boaz A.: *See—*
Mowbray, Dorian F.; and Jarrett, Boaz A., 4,300,873, Cl. 417-416.000.
Jasem, Sameer M.: *See—*
Tseung, Alfred C. C.; and Jasem, Sameer M., 4,300,987, Cl. 204-129.000.
Jegorow, Aleksander: *See—*
Egert, Klaus; Heinrich, Wolfgang; Lucas, Klaus; Kuhlbrodt, Klaus-Otto; Berger, Friedrich; Gohler, Peter; Schingnitz, Manfred; Gross, Manfred; Jegorow, Aleksander; Fedotov, Vasilij; Gavrilin, Vladimir; Gudymov, Ernest; Semenov, Vladimir; Achmatov, Igol; Majdurov, Nikolaj; and Abraamov, Evgenij, 4,300,913, Cl. 48-67.000.
Jehle, Dieter: *See—*
Preis, Lothar; and Jehle, Dieter, 4,300,321, Cl. 52-223.00R.
Jelinek, Jerry G., to Parker-Hannifin Corporation. Sealing device. 4,300,773, Cl. 277-11.000.
Jellinek, Hans H. G.; Frankenstein, Guenther E.; and Hanamoto, Ben, to United States of America, Army. Method for reducing the adhesion of ice to the walls of navigation locks. 4,301,208, Cl. 428-334.000.
Jencks, Charles L.: *See—*
Castonguay, Roger N.; and Jencks, Charles L., 4,301,342, Cl. 200-153.0SC.
Castonguay, Roger N.; and Jencks, Charles L., 4,301,346, Cl. 200-320.000.
Castonguay, Roger N.; and Jencks, Charles L., 4,301,433, Cl. 335-13.000.
Castonguay, Roger N.; and Jencks, Charles L., 4,301,436, Cl. 335-166.000.
Jennings Compound Bow, Inc.: *See—*
Schmitt, Chris, 4,300,521, Cl. 124-23.00R.
Jennings, Frederick R., to Pneumatic Scale Corporation. Paperboard carton. 4,300,716, Cl. 229-37.00R.
Jennings, Robert N. Sliding glass window and door lock apparatus including lock unit with dual spring biased eccentrics. 4,300,795, Cl. 292-257.000.
Jensen, Kenneth D., to Midland-Ross Corporation. Hydraulic booster valve. 4,300,583, Cl. 137-101.000.
Jeselnik, Mary E.: *See—*
Rideout, Walker H.; and Jeselnik, Mary E., 4,301,314, Cl. 570-253.000.
Jeunelot, Charles W.: *See—*
Franklin, Michael L.; and Jeunelot, Charles W., 4,300,689, Cl. 209-524.000.
Jezl, James L., to Standard Oil Company (Indiana). Crystalline olefin block polymers and their preparation. 4,301,256, Cl. 525-247.000.
JiHaPlast Johnson Juls AB: *See—*
Funke, Gustaf; and Hendberg, Bernt, 4,300,704, Cl. 221-301.000.
Johari, Girish C., to International Business Machines Corporation. Flyback converter control with feed forward. 4,301,497, Cl. 363-21.000.
Johns-Manville Corporation: *See—*
Stern, Walter, 4,300,685, Cl. 206-499.000.
Johns, McKinley R., to RCA Corporation. Antenna array with impedance matching using mutual coupling. 4,301,458, Cl. 343-800.000.
Johnson, Arthur L.: *See—*
Mettler, Leo L.; and Johnson, Arthur L., 4,301,095, Cl. 261-30.000.
Johnson, David M.: *See—*
de Monterey, Francis; Adhia, Bharat J.; and Johnson, David M., 4,300,954, Cl. 106-309.000.
Johnson, David W., Jr.; and Vogel, Eva M., to Bell Telephone Laboratories, Incorporated. Process of slurrying and spray drying ceramic oxides with polyethyleneimine dispersants. 4,301,020, Cl. 252-62.620.
Johnson, Derek: *See—*
Corfield, John R.; Johnson, Derek; and Taylor, Clifford G., 4,301,280, Cl. 544-016.000.
Johnson, Gary W.; and Hilson, David G., to Electro Materials Corp. of America. Film type resistor and method of producing same. 4,301,439, Cl. 338-195.000.
Johnson, George C., to Mobil Oil Corporation. Recovery of uranium from phosphate ores. 4,301,122, Cl. 423-17.000.
Johnson & Johnson Baby Products Company: *See—*
Pieniak, Heinz A., 4,300,562, Cl. 128-287.000.
Johnson, Matthey & Co., Limited: *See—*
Sloboda, Mieczyslaw H., 4,301,211, Cl. 428-385.000.
Johnson, Morris E.; Voorhes, William G.; and Breneiser, Dennis L., to Nichols-Homeshield, Inc. Method of producing a coating on a core. 4,300,379, Cl. 72-258.000.
Johnson, Robert W., to Exide Electronics Corporation. Method and apparatus for controlling a resonant power module. 4,301,398, Cl. 320-21.000.
Johnson Wax Associates: *See—*
Alley, F. William, 4,300,786, Cl. 280-602.000.
Jonelis, John A., to Western Electric Company, Incorporated. Methods and assemblies for mounting parts. 4,301,343, Cl. 200-283.000.
Jones, Barry M., to Hoechst Aktiengesellschaft. Free-flowing polyolefin molding composition of high filler content, process for its manufacture and its use. 4,301,047, Cl. 260-17.40R.
Jones, George D., to Airco, Inc. System for detecting position of gauge pointer. 4,300,548, Cl. 128-204.210.
Jones, George M., to Jackson, James A., Sr. Plasticizer mixer and method. 4,300,853, Cl. 404-92.000.
Jones, Joseph K.: *See—*
Winch, Allen R.; and Jones, Joseph K., 4,300,267, Cl. 19-200.000.
Jordan, Thomas W., to Wescom, Inc. Printed circuit board faceplate assembly. 4,301,494, Cl. 361-415.000.
Jouffret, Michel, to Rhone-Poulenc Industries. Process for the hydroxylation of aromatic compounds. 4,301,307, Cl. 568-771.000.
Journey, J. Craig, to Cornell-Dubilier Electric Corporation. DC Antenna rotator system. 4,301,397, Cl. 318-625.000.
Jucker, Erich J., heir: *See—*
Jucker, Jules, deceased; Jucker-Raths, Hedwig A., heir; Benz-Jucker, Edith H., heir; Jucker, Erich J., heir; and Uhlemann-Jucker, Christina U., heir, 4,301,335, Cl. 179-84.00L.
Jucker, Jules, deceased; by Jucker-Raths, Hedwig A., heir; by Benz-Jucker, Edith H., heir; by Jucker, Erich J., heir; and by Uhlemann-Jucker, Christina U., heir, to Reichle & De Massari. Visual telephone or other annuciator ringing indicator. 4,301,335, Cl. 179-84.00L.
Jucker-Raths, Hedwig A., heir: *See—*
Jucker, Jules, deceased; Jucker-Raths, Hedwig A., heir; Benz-Jucker, Edith H., heir; Jucker, Erich J., heir; and Uhlemann-Jucker, Christina U., heir, 4,301,335, Cl. 179-84.00L.
Jurascheck, Richard; and Nolte, Karl-Heinz, to Herbert Kannegiesser GmbH & Co. Apparatus for the stiffening of textile sheets by coating with plastic. 4,300,476, Cl. 118-694.000.
Jurgensen, David J.; and Marin, Roger A., to Tektronix, Inc. Residual clamp error compensation circuit. 4,301,474, Cl. 358-171.000.
Kabelitz, Hans-Peter: *See—*
Fischer, Berthold; Kabelitz, Hans-Peter; Pfaff, Hansen; and Schmitz, Andreas, 4,300,875, Cl. 418-55.000.
Kabushiki Kaisha Fujikoshi: *See—*
Hachisuka, Takeji, 4,300,951, Cl. 75-236.000.

Kabushiki Kaisha Universal: *See*—
  Momura, Toshihiro J., 4,300,769, Cl. 273-129.00V.
Kabushikikaisha Nakazima: *See*—
  Nakazima, Hiromu, 4,301,348, Cl. 219-61.200.
Kaczmarzyk, Leonard M.; Hlaban, James J.; and Jackson, David M., to Kimberly-Clark Corporation. Easily removable tampon. 4,300,561, Cl. 128-285.000.
Kadowaki, Takashi: *See*—
  Miyazawa, Sadayuki; Kadowaki, Takashi; and Yamamoto, Isao, 4,301,238, Cl. 430-495.000.
Kaga, Yosimi: *See*—
  Hayashi, Masayuki; Ifuku, Yasushi; Uchiyama, Hirofumi; Kaga, Yosimi; and Nakamori, Akifumi, 4,300,448, Cl. 99-516.000.
Kagantsev, Joseph S.: *See*—
  Blyakharov, Ayzik; and Kagantsev, Joseph S., 4,300,288, Cl. 30-409.000.
Kage, Kouzou, to Nippon Electric Co., Ltd. Supervising system for use in radio transmission. 4,301,539, Cl. 375-107.000.
Kageyama, Kunio; Omote, Shigeo; Taguchi, Youichi; and Yamazaki, Hazime, to Yokohama Rubber Co., Ltd., The. Puncture sealant for a tire. 4,300,614, Cl. 152-347.000.
Kai Cutlery Center Co., Ltd.: *See*—
  Endo, Saijiro, 4,300,285, Cl. 30-41.000.
Kain, Arthur F. Method of molding a suspension idler. 4,301,109, Cl. 264-219.000.
Kaiser, Donald J.; Behar, Albert; and Krupicka, William A., to Scoville Inc. Securing device comprising padlock and anchored housing. 4,300,370, Cl. 70-34.000.
Kaiser, Emil; and Colescott, Robert L., to Armour Pharmaceutical Company. Synthesis of peptides. 4,301,045, Cl. 260-8.000.
Kakeya, Noboru: *See*—
  Fukui, Kiyoshi; and Kakeya, Noboru, 4,301,301, Cl. 568-17.000.
Kalanke, Hans E.: *See*—
  Kugler, Hans, 4,300,346, Cl. 59-79.00R.
Kalnin, Evgeny I.: *See*—
  Ushakov, Konstantin I.; Khilko, Mikhail E.; Felman, Rina I.; Sadykov, Vasily I.; Kalnin, Evgeny I.; and Kovgan, Pavel A., 4,300,949, Cl. 75-73.000.
Kaltenekker, Bela; and Loofbourrow, William L., to Fairchild Camera & Instr. Corp. Apparatus for measuring deflection of a blade upon application of force thereto. 4,300,398, Cl. 73-849.000.
Kalunyants, Kalust A.: *See*—
  Rumyantseva, Galina N.; Grebeshova, Renata N.; Kalunyants, Kalust A.; Artemieva, Irina V.; and Lomakina, Raisa D., 4,301,251, Cl. 435-267.000.
Kametani, Yoshiya; and Iino, Yasuo, to Nitto Chemical Industry Co., Ltd. Process for preparing dimethylaminoethyl methacrylate. 4,301,297, Cl. 560-217.000.
Kameyama, Akinori; Saito, Hiroyasu; and Inomata, Jihei, to Nippon Kasei Chemical Co., Ltd. Pre-copolymer comprising diallyl phthalate and triallyl isocyanurate. 4,301,263, Cl. 526-68.000.
Kameyama, Syuichi, to Tokyo Shibaura Denki Kabushiki Kaisha. I2L With PNPN injector. 4,301,382, Cl. 307-477.000.
Kamogawa, Nin-ichi: *See*—
  Ito, Takashi; and Kamogawa, Nin-ichi, 4,301,359, Cl. 219-469.000.
Kane, John L.; and Nadkarni, Vikas M., to Owens-Corning Fiberglas Corporation. Apparatus for fluidically attenuating filaments. 4,300,876, Cl. 425-66.000.
Kaneko, Hisasi: *See*—
  Hirayama, Takao; Fujishima, Minoru; Kaneko, Hisasi; and Tanaka, Shigeyoshi, 4,301,048, Cl. 260-22.0CQ.
Kanesho Co., Ltd.: *See*—
  Imazaki, Hideyuki; Fujikawa, Masazumi; and Kariya, Hiromitsu, 4,301,173, Cl. 424-288.000.
Kariya, Hiromitsu: *See*—
  Imazaki, Hideyuki; Fujikawa, Masazumi; and Kariya, Hiromitsu, 4,301,173, Cl. 424-288.000.
Kartte, Klaus: *See*—
  Fuchs, Hugo; Grosskinsky, Otto-Alfred; Frommer, Elmar; and Kartte, Klaus, 4,301,073, Cl. 260-239.30A.
Kasai, Isamu; Tomiita, Kazuo; and Inuyama, Hisao, to Toray Industries, Inc. Method for winding a false twisted yarn in a cheese. 4,300,345, Cl. 57-290.000.
Kashden, R. Paul, to Closet Systems Corp. Swingable hanger support member. 4,300,741, Cl. 248-289.100.
Kasper, Klaus: *See*—
  Katscher, Werner; and Kasper, Klaus, 4,300,984, Cl. 376-459.000.
Kasuya, Kazusato: *See*—
  Takada, Shigetaka; Kasuya, Kazusato; and Watanabe, Yukihiro, 4,300,505, Cl. 123-445.000.
Katakura Chikkarin Co.: *See*—
  Morizumi, Mitsuo; and Kawahata, Masahiro, 4,300,590, Cl. 137-413.000.
Katakuse, Itsuo: *See*—
  Matsuo, Takekiyo; Katakuse, Itsuo; and Matsuda, Hisashi, 4,301,369, Cl. 250-423.00R.
Kataoka, Mutsuo: *See*—
  Atarashi, Yuji; and Kataoka, Mutsuo, 4,301,231, Cl. 430-287.000.
Katayama, Yoshiyuki; Hasegawa, Shigekazu; Okuyama, Shigeaki; and Nakamura, Norimi, to Kubota, Ltd. Automatic position control apparatus for ground working vehicle. 4,300,638, Cl. 172-10.000.
Katchman, Arthur: *See*—
  Cooper, Glenn D.; and Katchman, Arthur, 4,301,059, Cl. 260-42.180.
Kather, Kenneth C.: *See*—
  Notaro, Frank; Acharya, Arun; and Kather, Kenneth C., 4,300,356, Cl. 62-50.000.
Katner, Allen S., to Eli Lilly and Company. 1-Oxa-β-lactam antibiotics. 4,301,282, Cl. 544-90.000.
Katscher, Werner; and Kasper, Klaus, to Kernforschungsanlage Julich GmbH. Top reflector for a nuclear-reactor vessel. 4,300,984, Cl. 376-459.000.
Kaufman, Robert J., to Monsanto Company. N-(Substituted carbonyl) derivatives of N-phos-phinylmethylglycinates and the herbicidal use thereof. 4,300,942, Cl. 71-87.000.
Kaufmann, Kenneth M., to Pako Corporation. Photosensitive sheet processor. 4,300,828, Cl. 354-322.000.
Kavchok, Ronald W., to Goodyear Tire & Rubber Company, The. Fabric composite and rubber reinforced therewith. 4,300,615, Cl. 152-357.00R.
Kawabata, Takashi: *See*—
  Sakane, Toshio; Hosoe, Kazuya; Kinoshita, Takao; Tsunekawa, Tokuichi; and Kawabata, Takashi, 4,301,478, Cl. 358-227.000.
Kawahara, Hitoshi: *See*—
  Hotta, Seiji; Kawahara, Hitoshi; Hatori, Minoru; and Koseki, Fumio, 4,301,227, Cl. 430-106.000.
Kawahata, Masahiro: *See*—
  Morizumi, Mitsuo; and Kawahata, Masahiro, 4,300,590, Cl. 137-413.000.
Kawai Musical Instrument Mfg. Co., Ltd.: *See*—
  Deutsch, Ralph, 4,300,432, Cl. 84-1.010.
  Deutsch, Ralph, 4,300,434, Cl. 84-1.190.
Kawakubo, Katsuhiko: *See*—
  Konotsune, Takuo; and Kawakubo, Katsuhiko, 4,301,293, Cl. 548-377.000.
Kaye, Donald J.: *See*—
  Goodnow, Robert A.; Shade, Floyd J.; Sloboth, Thomas A.; and Kaye, Donald J., 4,300,545, Cl. 128-200.140.
Keil, Karl-Heinz: *See*—
  Engelhardt, Friedrich; Keil, Karl-Heinz; Weckler, Gerhard; and Sternberger, Klaus, 4,300,903, Cl. 8-531.000.
Keil, Ronald W., to Hewlett-Packard Company. Moving head printer mechanism. 4,300,844, Cl. 400-120.000.
Keith, Everette R.; Cook, Kenneth J.; Power, Joseph S.; and Ruszala, Frederick B., to Valeron Corporation, The. Test device for blood pressure monitor. 4,301,512, Cl. 364-801.000.
Keizer, Alan S.; and Brown, Donald B., to Jade Corporation, The. Mechanical pulse reflow bonding process. 4,300,715, Cl. 228-180.00A.
Kekuna, Haunani: *See*—
  McWhorter, Thomas E.; Kekuna, Haunani; Gabel, Brian L.; and Osmundson, Eric C., 4,300,355, Cl. 62-48.000.
Keller, Patrick N.; and Biesiadecki, Leon G. Phase controlled shuttering system with selectable shuttered and unshuttered modes. 4,301,476, Cl. 358-209.000.
Kelley, Gordon D. Cleanable woodburning stove grate. 4,300,529, Cl. 126-152.00B.
Kelm, Edward C., to Geophysical Systems Corp. Method and apparatus for data acquisition and transport. 4,301,521, Cl. 367-78.000.
Kelso, Charles R.: *See*—
  Mayer, Endre A.; and Kelso, Charles R., 4,300,595, Cl. 137-625.330.
Kemp, David M.: *See*—
  Skoli, Sigmund P.; Dulian, Robert J.; and Kemp, David M., 4,300,923, Cl. 55-196.000.
Kendall Company, The: *See*—
  Shah, Kishore R., 4,300,820, Cl. 351-160.00H.
Kennecott Corporation: *See*—
  Lai, Ralph W. M.; and Litchfield, John K., 4,301,124, Cl. 423-24.000.
Kennedy, Peter, to United Kingdom Atomic Energy Authority. Silicon carbide bodies and their production. 4,301,132, Cl. 423-345.000.
Kernforschungsanlage Julich Gesellschaft mit Beschrankter Haftung: *See*—
  Divisek, Jiri; and Mergel, Jurgen, 4,300,993, Cl. 204-290.00R.
  Katscher, Werner; and Kasper, Klaus, 4,300,984, Cl. 376-459.000.
Kernforschungszentrum Karlsruhe: *See*—
  Dalle Donne, Mario; Dorner, Stefan; and Schumacher, Gustav, 4,300,983, Cl. 376-280.000.
Kerscher, Utto: *See*—
  Neukirchen, Ernst; and Kerscher, Utto, 4,301,058, Cl. 260-40.00R.
Kestrel Chemicals Limited: *See*—
  Underwood, William S.; and Bohm, Louis, 4,301,060, Cl. 260-42.490.
Keuchel, Herbert W., to PNC Company. Manufacturing a thermoplastic non-woven web comprising coherently interconnected filaments. 4,301,203, Cl. 428-105.000.
Khait, George. Percussive dental crown extractor. 4,300,885, Cl. 433-151.000.
Khan, Sadath U.: *See*—
  Grabowski, Albert T.; and Khan, Sadath U., 4,301,176, Cl. 424-318.000.
Khilko, Mikhail E.: *See*—
  Ushakov, Konstantin I.; Khilko, Mikhail E.; Felman, Rina I.; Sadykov, Vasily I.; Kalnin, Evgeny I.; and Kovgan, Pavel A., 4,300,949, Cl. 75-73.000.
Khvorostukhin, Vladimir A.: *See*—
  Mikhailov, Gerold M.; Tyabin, Nikolai V.; Khvorostukhin, Vladimir A.; Zakharov, Valery V.; and Nikolaev, Vitaly N., 4,300,625, Cl. 165-95.000.

Kiedik, Maciej; Kolt, Jozef; Czyz, Jerzy; Grzywa, Edward; Niezgoda, Anna; and Terelak, Kazimierz, to Instytut Ciezkiej Syntezy Organicznej "Blachownia". Continuous process for preparation of dian. 4,301,305, Cl. 568-727.000.
Kienstra, Mary: *See*—
  Simon, Frank J.; Reinke, William C.; Soo, Hong-Ming; Kienstra, Mary; and Richert, Stanley H., 4,301,181, Cl. 426-250.000.
Kierstead, Richard W.: *See*—
  Fahrenholtz, Kenneth E.; Guthrie, Robert W.; Kierstead, Richard W.; and Tilley, Jefferson W., 4,301,300, Cl. 564-92.000.
Kightlinger, Adrian P.; Speakman, Edwin L.; and Van Duzee, Grant T., to Standard Brands Incorporated. Stable, liquid starch graft copolymer composition. 4,301,017, Cl. 252-8.600.
Kikuchi, Toshiro; and Ando, Makoto, to Toyo Boseki Kabushiki Kaisha. Quantitative analysis of free fatty acid and reagent composition therefor. 4,301,244, Cl. 435-4.000.
Killian, Robert M. Easily movable shelf for step ladder. 4,300,740, Cl. 248-238.000.
Kimball International, Inc.: *See*—
  Fritz, Gary R.; and Robinson, John W., 4,300,436, Cl. 84-345.000.
Kimberly-Clark Corporation: *See*—
  Kaczmarzyk, Leonard M.; Hlaban, James J.; and Jackson, David M., 4,300,561, Cl. 128-285.000.
  Sigl, Wayne C., 4,300,967, Cl. 156-164.000.
Kimbrough, Andrew G.; Rothermel, Ronald R.; and Viri, Donald P., to Dimetrics, Inc. Gas metal arc welding system. 4,301,355, Cl. 219-137.0PS.
Kimura, Takao: *See*—
  Oi, Nobuhiro; Aoki, Bunya; Shinozaki, Teizo; Moro, Kanji; Matsunaga, Isao; Noto, Takao; Nebashi, Toshiyuki; Harada, Yusuke; Endo, Hisao; Kimura, Takao; Okazaki, Hiroshi; Ogawa, Haruki; and Shindo, Minoru, 4,301,161, Cl. 424-246.000.
King, David L.: *See*—
  Thiele, Gerald H.; Freiberg, Ashley H.; Skiles, Robert L.; and King, David L., 4,300,945, Cl. 71-95.000.
King, Lawrence. Animal trap. 4,300,305, Cl. 43-81.000.
Kingsdown Medical Consultants, Ltd.: *See*—
  Steer, Peter L.; and Edwards, John V., 4,300,560, Cl. 128-283.000.
Kinkel, Karl, to DeMag Aktiengesellschaft. Torque responsive, dual speed rotary power driver. 4,300,641, Cl. 173-12.000.
Kinney, Michael J. Method for treating schizophrenia. 4,300,551, Cl. 128-214.00R.
Kinoshita, Takao: *See*—
  Sakane, Toshio; Hosoe, Kazuya; Kinoshita, Takao; Tsunekawa, Tokuichi; and Kawabata, Takashi, 4,301,478, Cl. 358-227.000.
Kintigh, Dana W.: *See*—
  Goldman, Mark B.; Kintigh, Dana W.; and Chalifour, Henri R., 4,301,429, Cl. 333-22.00R.
Kiselevsky, Leonid I.: *See*—
  Shipai, Andrei K.; Zolotovsky, Anatoly I.; Moskovsky, Vladislav G.; Naumenko, Nikolai N.; Shimanovich, Vladimir D.; and Kiselevsky, Leonid I., 4,301,352, Cl. 219-121.0PR.
Kishi, Naoyuki: *See*—
  Masuda, Shinichi; Tanaka, Tsugio; Kishi, Naoyuki; and Nagasaka, Yukio, 4,301,050, Cl. 260-28.00R.
Kishihiro, Yamaoka. Kneader for compounded resin. 4,300,840, Cl. 366-88.000.
Kitamura, Masatsugu, to Victor Company of Japan, Limited. Apparatus for monitoring reproduced audio signals during fast playback operation. 4,301,480, Cl. 360-8.000.
Kitaura, Mashio; and Taniguchi, Nobuyuki, to Minolta Camera Kabushiki Kaisha. Control of shutter closing for excessive object brightness. 4,300,825, Cl. 354-34.000.
Kiwala, Jacob: *See*—
  Sprecker, Mark A.; Schmitt, Frederick L.; Vock, Manfred H.; Vinals, Joaquin F.; and Kiwala, Jacob, 4,301,018, Cl. 252-8.600.
  Sprecker, Mark A.; Schmitt, Frederick L.; Vock, Manfred H.; Vinals, Joaquin F.; and Kiwala, Jacob, 4,301,022. Cl. 252-174.110.
  Sprecker, Mark A.; Schmitt, Frederick L.; Vock, Manfred H.; Vinals, Joaquin F.; and Kiwala, Jacob, 4,301,024, Cl. 252-301.310.
  Sprecker, Mark A.; Schmitt, Frederick L.; Vock, Manfred H.; Vinals, Joaquin F.; and Kiwala, Jacob, 4,301,309, Cl. 568-826.000.
Kjaer, Per. Combined rucksack frame and chair. 4,300,707, Cl. 224-155.000.
Klaas, Jeffrey M., to Texas Instruments Incorporated. Differential sensing of single ended memory array. 4,301,518, Cl. 365-185.000.
Klauck, Manfred: *See*—
  Schon, Otmar P.; and Klauck, Manfred, 4,301,005, Cl. 210-90.000.
Kleiner, Frank: *See*—
  Cohnen, Wolfgang; Kleiner, Frank; and Kranz, Gerhard, 4,301,212, Cl. 428-412.000.
Klemarczyk, Philip: *See*—
  Sprecker, Mark A.; Sanders, James M.; Schreiber, William L.; Watkins, Hugh; Vinals, Joaquin F.; Shuster, Edward J.; O'Rourke, Thomas J.; Hagedorn, Myrna L.; and Klemarczyk, Philip, 4,301,302, Cl. 568-373.000.
Kluge, Arthur F.; Strosberg, Arthur M.; Whiting, Roger; and Christie, George A., to Syntex (U.S.A.) Inc. 2-(1,4-Benzodioxan-2-ylalkyl)benzimidazoles useful as anti-depressants. 4,301,171, Cl. 424-273.00B.
Klygis, Mindaugas J.; and Benno, Edward L., to Illinois Tool Works Inc. Bottle package and packaging device. 4,300,681, Cl. 206-428.000.
Knapp, Heinrich; and Rehmann, Wolfgang, to Robert Bosch GmbH. Fuel supply system. 4,300,506, Cl. 123-478.000.
Knetzger, Robert C., to Mattel, Inc. Electronic board game. 4,300,770, Cl. 273-238.000.
Knighton, David R. Fluid administering and pressure sensing apparatus. 4,300,572, Cl. 128-674.000.
Knopf, Frank A.: *See*—
  Anderson, John A.; Born, Richard C.; Knopf, Frank A.; Sabroff, Richard R.; Schutten, Herman P.; and Van Zeeland, Donald L., 4,301,508, Cl. 364-483.000.
Knothe, Erich; Melcher, Franz-Josef; Ober, Jurgen; and Behrend, Lothar, to Sartorius GmbH. Electromagnetic force compensation scale with temperature compensation. 4,300,647, Cl. 177-212.000.
Knothe, Erich: *See*—
  Melcher, Franz-Josef; Berg, Christoph; and Knothe, Erich, 4,300,646, Cl. 177-212.000.
Knox Manufacturing Co.: *See*—
  Brown, Donald J., 4,300,318, Cl. 51-425.000.
Kobe Steel, Ltd.: *See*—
  Sato, Norimoto; Miyaoka, Minoru; Yamasaki, Shin; Inoue, Kimio; Kuriyama, Akimasa; Fukui, Tsugushi; and Asai, Toshihiro, 4,300,838, Cl. 366-84.000.
Kobori, Yasunori: *See*—
  Furuhata, Takashi; and Kobori, Yasunori, 4,301,395, Cl. 318-314.000.
Koch, Christian; and Behrmann, Alfred, to Kraftwerk Union Aktiengesellschaft. Method for preventing adhesion or caking of hydrocarbon-containing raw materials. 4,300,917, Cl. 48-213.000.
Koch, Manfred; and Bosshard, Ernst, to G & W Machinery Inc. Mandrel for a ball winding machine. 4,300,727, Cl. 242-2.000.
Koch, Ronald N.: *See*—
  Stamm, Johann A.; Sarver, James C., Jr.; and Koch, Ronald N., 4,301,011, Cl. 210-447.000.
Kockler, Barry C.: *See*—
  Danchak, Nicholas, Jr.; Saxinger, Allan L.; Gray, Roger M.; and Kockler, Barry C., 4,300,756, Cl. 271-8.00R.
Koeneman, Robert M.; and Schafer, Albert L., to Remcor Products Company. Cold plate system for ice dispenser. 4,300,359, Cl. 62-379.000.
Koepp, Ronald L.; Oliver, Floyd F.; and Barnett, James V., to Fairchild Camera and Instrument Corp. Programmable alarm clock. 4,301,524, Cl. 368-261.000.
Koeppel, Robert, to Produits Chimiques Ugine Kuhlmann. Anhydrite cellular concrete composite building elements and their method of manufacture. 4,300,324, Cl. 52-612.000.
Kohn, Jean, to Baltek Corporation. Technique for converting balsa logs into panels. 4,301,202, Cl. 428-50.000.
Kohno, Mitsuo: *See*—
  Taguchi, Tadashi; Fujikawa, Noboru; Kohno, Mitsuo; Yoshitake, Katsumi; and Satake, Kunio, 4,301,230, Cl. 430-273.000.
Koike, Susumu; and Iwasa, Hitoo, to Matsushita Electric Industrial Co., Ltd. Method of making a light emitting diode. 4,300,960, Cl. 148-171.000.
Koiso, Junichi; and Ito, Hiroko, to Konishiroku Photo Industry Co., Ltd. Apparatus for receiving recording sheets in upset state for copying machine. 4,300,757, Cl. 271-207.000.
Kolb, Ernest D.; and Laudise, Robert A., to Bell Telephone Laboratories, Incorporated. Growth of $AlPO_4$ crystals. 4,300,979, Cl. 156-623.00R.
Kolenik, Steve; and Langer, Alois A., to Mirowski, Mieczyslaw. Method and apparatus for effecting automatic ventricular defibrillation and/or demand cardioversion through the means of an implanted automatic defibrillator. 4,300,567, Cl. 128-419.00D.
Kollmorgen Techoologies Corp.: *See*—
  McCormack, John F.; and Nuzzi, Francis J., 4,301,196, Cl. 427-305.000.
Kolt, Jozef: *See*—
  Kiedik, Maciej; Kolt, Jozef; Czyz, Jerzy; Grzywa, Edward; Niezgoda, Anna; and Terelak, Kazimierz, 4,301,305, Cl. 568-727.000.
Komai, Hiromichi: *See*—
  Isayama, Takuro; Komai, Hiromichi; Yamazaki, Hiroshi; and Sato, Tsutomu, 4,301,459, Cl. 346-140.00R.
Kondo, Teruhisa; Ishiguro, Jiro; and Watanabe, Nobuatsu. Antioxidant for carbonaceous material and method. 4,301,026, Cl. 252-400.00R.
Kondo, Yoshinobu: *See*—
  Matsuoka, Hideoki; and Kondo, Yoshinobu, 4,300,789, Cl. 280-801.000.
Kondziola, Joseph D., to General Motors Corporation. Belt roll-up retractor. 4,300,731, Cl. 242-107.200.
Konig, Friedrich W.: *See*—
  Ramisch, Reinhard, 4,301,488, Cl. 360-132.000.
Konishiroku Photo Industry Co., Ltd.: *See*—
  Ito, Takashi; and Kamogawa, Nin-ichi, 4,301,359, Cl. 219-469.000.
  Koiso, Junichi; and Ito, Hiroko, 4,300,757, Cl. 271-207.000.
  Miyazawa, Sadayuki; Kadowaki, Takashi; and Yamamoto, Isao, 4,301,238, Cl. 430-495.000.
Konotsune, Takuo; and Kawakubo, Katsuhiko, to Sankyo Company Ltd. Herbicidal compositions and pyrazole derivatives. 4,301,293, Cl. 548-377.000.
Koopman, Donald E.: *See*—
  Buirley, William L.; Koopman, Donald E.; McQuain, David B.; and Reeves, William H., 4,301,054, Cl. 260-29.4UA.
Kopf, Wolfgang, to Daimler-Benz Aktiengesellschaft. Mounting for an adjustable steering hand wheel for motor vehicles. 4,300,407, Cl. 74-493.000.
Kopito, Louis. Product, composition, and process for anorectal propbylactic and/or therapeutic care. 4,300,555, Cl. 128-248.000.

Kordowski, Edward S.: *See—*
Wait, Hershey L.; and Kordowski, Edward S., 4,300,694, Cl. 217-43.00R.
Kori, Toshitaro; and Oka, Tateki, to Minolta Camera Kabushiki Kaisha. Electrographic developing material and developing method employing said developing material. 4,301,228, Cl. 430-122.000.
Koritsu Machine Industry Limited: *See—*
Akira, Tsuzuki; and Hiroshi, Tobitani, 4,300,986, Cl. 202-241.000.
Kornienko, Marat I.: *See—*
Galkin, Mikhail M.; Kornienko, Marat I.; Podboronov, Boris P.; Sokolov, Sergei S.; and Furman, Anatoly V., 4,301,402, Cl. 324-62.000.
Korobkov, Vladlen V.: *See—*
Mitin, Leonid A.; Fadeev, Petr Y.; Ponomarev, Leonid F.; Fadeev, Vladimir Y.; Rybert, Vyacheslav F.; Reutsky, Jury V.; Kulagin, Rim A.; Vorozheikin, Anatoly A.; Ermilov, Nikolai P.; Dimova, Lidia P.; Doskaziev, Adil G.; Korobkov, Vladlen V.; Babenko, Sergei A.; Akhmatov, Mikhail M.; Zhaksybaev, Nabi K., deceased; and Zhaksybaeva, Ekaterina S., executrix, 4,300,802, Cl. 299-64.000.
Korpman, Ralf, to Permacel. Novel alloy compositions and products. 4,301,255, Cl. 525-92.000.
Kosaka, Hideki: *See—*
Otsuki, Keizo; Mochizuki, Hidetoshi; Suzuki, Akira; Adachi, Yoshio; Kosaka, Hideki; and Murakami, Gen, 4,301,464, Cl. 357-70.000.
Kosarzecki, Constantine, to Modular Controls Corporation. Hydraulic sequence valve. 4,300,584, Cl. 137-106.000.
Koseki, Fumio: *See—*
Hotta, Seiji; Kawahara, Hitoshi; Hatori, Minoru; and Koseki, Fumio, 4,301,227, Cl. 430-106.000.
Koshugi, Junichi, to Kureha Kagaku Kogyo Kabushiki Kaisha. Chitin containing poly-ion complex. 4,301,067, Cl. 260-112.50R.
Koslar, Manfred, to Siemens Aktiengesellschaft. Hand held testing device for indicating an electric test voltage. 4,301,407, Cl. 324-96.000.
Kostler, Hans-Gunter: *See—*
Wehner, Wolfgang; and Kostler, Hans-Gunter, 4,301,085, Cl. 260-429.700.
Kosuga, Jiro. Electric storage cell or battery. 4,301,219, Cl. 429-57.000.
Kotulla, Norbert: *See—*
Alguire, Donald E.; Bennett, Robert; Kotulla, Norbert; and Yeung, Anthony C., 4,301,113, Cl. 422-2.000.
Kovgan, Pavel A.: *See—*
Ushakov, Konstantin I.; Khilko, Mikhail E.; Felman, Rina I.; Sadykov, Vasily I.; Kalnin, Evgeny I.; and Kovgan, Pavel A., 4,300,949, Cl. 75-73.000.
Kozima, Akio; and Akutsu, Eiichi, to Ricoh Co., Ltd. Electrophotographic element with a combination of binder resins. 4,301,224, Cl. 430-58.000.
Kraftwerk Union Aktiengesellschaft: *See—*
Frewer, Hans; Muller, Rainer; and Schiffers, Ulrich, 4,300,916, Cl. 48-210.000.
Koch, Christian; and Behrmann, Alfred, 4,300,917, Cl. 48-213.000.
Kranz, Gerhard: *See—*
Cohnen, Wolfgang; Kleiner, Frank; and Kranz, Gerhard, 4,301,212, Cl. 428-412.000.
Krauss-Maffei Aktiengesellschaft: *See—*
Taubenmann, Peter, 4,300,776, Cl. 277-124.000.
Kraychy, Stephen: *See—*
Frank, Patricia; Kraychy, Stephen; and Le Von, Ernest F., 4,301,140, Cl. 424-1.500.
Krehling, Robert P.; and Pfeiffer, Ronald E., to American Cyanamid Company. Melt-spinning a plurality of acrylonitrile polymer fibers. 4,301,107, Cl. 264-206.000.
Kreeley, Bruce K., to Singer Company, The. Axial flow valve. 4,300,748, Cl. 251-5.000.
Krieger, Klaus: *See—*
Straubel, Max; Stumpp, Gerhard; Krieger, Klaus; and Wessel, Wolf, 4,300,515, Cl. 123-568.000.
Krier, Martin: *See—*
Liebel, Henry L.; and Krier, Martin, 4,300,864, Cl. 410-154.000.
Kristiansen, Odd: *See—*
Drabek, Jozef; Ackermann, Peter; Farooq, Saleem; Gsell, Laurenz; and Kristiansen, Odd, 4,301,304, Cl. 568-637.000.
Krogsgaard-Larsen, Povl, to H. Lundbeck & Co. A/S. Heterocyclic compounds. 4,301,287, Cl. 546-19.000.
Kropac, Vaclav, to TH. Goldschmidt AG. Process for the preparation of organopolysiloxanes modified with methacrylic esters. 4,301,268, Cl. 528-26.000.
Kruber, H. W., to Carl Heyer GmbH Inhalationstechnik. Hand-held atomizer especially for dispensing inhalation-administered medicaments. 4,300,546, Cl. 128-200.160.
Krude, Werner, to Uni-Cardan AG. Vehicle wheel mounting and driving assembly including constant velocity universal joint. 4,300,651, Cl. 180-256.000.
Krumhansl, Mark U. Process control. 4,300,909, Cl. 23-230.00A.
Krupicka, William A.: *See—*
Kaiser, Donald J.; Behar, Albert; and Krupicka, William A., 4,300,370, Cl. 70-54.000.
Krupp Polysius AG: *See—*
Goldmann, Wolf; Michaelsen, Dieter; Dreyer, Dieter; Holsiepe, Dietmar; Tiggesbaumker, Peter; Bauer, Klaus; Durr, Manfred; and Mersmann, Heinz G., 4,300,879, Cl. 432-14.000.
Kruse, Richard H.: *See—*
Hoffman, Robert C.; Kruse, Richard H.; and Martin, Donald P., 4,300,847, Cl. 400-196.100.
Martin, Donald P.; Hoffman, Robert C.; and Kruse, Richard H., 4,300,845, Cl. 400-124.000.
Kubo, Masaharu: *See—*
Takemoto, Iwao; Kubo, Masaharu; Ohba, Shinya; Tanaka, Shuhei; and Aoki, Masakazu, 4,301,477, Cl. 358-213.000.
Kubota, Hitoshi; Hayashida, Yoshihiro; and Kutsuma, Hironori, to Nissan Motor Co., Ltd.; and Tokico Ltd. Level detecting device. 4,301,440, Cl. 340-59.000.
Kubota, Ltd.: *See—*
Katayama, Yoshiyuki; Hasegawa, Shigekazu; Okuyama, Shigeaki; and Nakamura, Norimi, 4,300,638, Cl. 172-10.000.
Kuca, Zdenek: *See—*
Muller, Rolf; Hartmann, Werner; and Kuca, Zdenek, 4,301,311, Cl. 568-719.000.
Kuch, Philip L.: *See—*
Shaw, Wilfrid G.; Kuch, Philip L.; and Paparizos, Christos, 4,301,031, Cl. 252-435.000.
Kuchenbecker, Morris W., to American Can Company. Blister package. 4,300,682, Cl. 206-461.000.
Kuczkowski, Joseph A., to Goodyear Tire & Rubber Company, The. Antioxidant combination of esters and amines. 4,301,296, Cl. 560-152.000.
Kudo, Mitsuhiro: *See—*
Suenaga, Masahide; Shimizu, Noboru; Kudo, Mitsuhiro; Yamaguchi, Hiroshi; and Mitani, Masao, 4,301,353, Cl. 219-121.0LJ.
Kuehler, Christopher W., to Chevron Research Company. Three-stage coal liquefaction process. 4,300,996, Cl. 208-10.000.
Kugel, Roger W., to Nalco Chemical Company. Method for the determination of dosage of freeze conditioning agents on coal. 4,300,908, Cl. 23-230.00R.
Kugler, Hans, to Kalanke, Hans E. Extensible strap. 4,300,346, Cl. 59-79.00R.
Kuhlbrodt, Klaus-Otto: *See—*
Egert, Klaus; Heinrich, Wolfgang; Lucas, Klaus; Kuhlbrodt, Klaus-Otto; Berger, Friedrich; Gohler, Peter; Schingnitz, Manfred; Gross, Manfred; Jegorow, Aleksander; Fedotov, Vasilij; Gavrilin, Vladimir; Gudymov, Ernest; Semenov, Vladimir; Achmatov, Igol; Majdurov, Nikolaj; and Abraamov, Evgenij, 4,300,913, Cl. 48-67.000.
Kuhn, John J.: *See—*
Nagel, Harry C.; and Kuhn, John J., 4,301,490, Cl. 361-89.000.
Kuijpers, Petrus J. M.; Stuivenwold, Paulus A.; and van Arkel, Johannes, to Shell Oil Company. Measuring two-phase flow. 4,300,399, Cl. 73-861.040.
Kulagin, Rim A.: *See—*
Mitin, Leonid A.; Fadeev, Petr Y.; Ponomarev, Leonid F.; Fadeev, Vladimir Y.; Rybert, Vyacheslav F.; Reutsky, Jury V.; Kulagin, Rim A.; Vorozheikin, Anatoly A.; Ermilov, Nikolai P.; Dimova, Lidia P.; Doskaziev, Adil G.; Korobkov, Vladlen V.; Babenko, Sergei A.; Akhmatov, Mikhail M.; Zhaksybaev, Nabi K., deceased; and Zhaksybaeva, Ekaterina S., executrix, 4,300,802, Cl. 299-64.000.
Kullen, Allan S.; and Ratner, Phillip. Method of producing continuous tone gradation prints. 4,301,232, Cl. 430-300.000.
Kumar, Ananda H.; McMillan, Peter W.; and Tummala, Rao R., to International Business Machines Corporation. Glass-ceramic structures and sintered multilayer substrates thereof with circuit patterns of gold, silver or copper. 4,301,324, Cl. 174-68.500.
Kunii, Tadashi: *See—*
Sugio, Akitoshi; Amemiya, Akira; Konii, Tadashi; Forusawa, Tomotaka; Takeda, Mutsuhiko; Tanaka, Katsumasa; and Umemura, Toshikazu, 4,301,273, Cl. 528-230.000.
Kuraray Co., Ltd.: *See—*
Yoshimura, Noriaki; and Tamura, Masuhiko, 4,301,083, Cl. 260-404.000.
Kurata, Junichi: *See—*
Morii, Takashi; and Kurata, Junichi, 4,301,526, Cl. 369-33.000.
Kure, Edward A.: *See—*
Raghupathi, Narasimhan; and Kure, Edward A., 4,300,410, Cl. 74-579.00R.
Kureha Gosen Kabushiki Kaisha: *See—*
Nakamura, Masaaki; and Ueba, Hisaaki, 4,300,343, Cl. 57-251.000.
Kureha Kagaku Kogyo Kabushiki Kaisha: *See—*
Kosbugi, Junichi, 4,301,067, Cl. 260-112.50R.
Nakamura, Masaaki; and Ueba, Hisaaki, 4,300,343, Cl. 57-251.000.
Kurisaki, Konomu: *See—*
Sato, Haruhito; Ichikawa, Hiroshi; Hayashi, Hiroshi; and Kurisaki, Konomu, 4,301,043, Cl. 252-522.00A.
Kuriyama, Akimasa: *See—*
Sato, Norimoto; Miyanka, Minoru; Yamasaki, Shin; Inoue, Kimio; Kuriyama, Akimasa; Fukui, Tsugushi; and Asai, Toshihiro, 4,300,838, Cl. 366-84.000.
Kusumi, Yuji: *See—*
Yamashita, Izumi; Yoshida, Kazuo; Kusumi, Yuji; Fukuda, Kunio; and Tazaki, Kichiya, 4,301,062, Cl. 260-45.75B.
Kutsuma, Hironori: *See—*
Kubota, Hitoshi; Hayashida, Yoshihiro; and Kutsuma, Hironori, 4,301,440, Cl. 340-59.000.
Kuzko, Antoni: *See—*
Schroeder, Jeizy; Lewandowski, Mieczyslaw; Kuzko, Antoni; Gorecki, Henryk; Zielinski, Krzysztof; Pozniak, Tadeusz; Zieba, Stefan; Gorecka, Helena; Pawelczyk, Adam; and Wysocki, Andizej, 4,301,130, Cl. 423-320.000.

KV33 Corporation: *See—*
Huffman, Ronald E., 4,301,357, Cl. 219-229.000.
Laas, Harald; Nissen, Axel; and Meissner, Bernd, to BASF Aktiengesellschaft. Process for the preparation of carboxylic acid esters of β-formyl-crotyl alcohol by an allyl rearrangement. 4,301,084, Cl. 260-405.600.
La Bate, Micheal D. Hot metal runner system with air pollution controls. 4,300,753, Cl. 266-196.000.
Labrande, Jean-Paul: *See—*
Busse, Claus-Adolf; and Labrande, Jean-Paul, 4,300,626, Cl. 165-96.000.
Lachman, Irwin M., to Corning Glass Works. Dense cordierite containing manganese. 4,300,953, Cl. 501-112.000.
Lafforgue, Paul: *See—*
Gruet, Michel; Lafforgue, Paul; and Michel, Pierre, 4,301,123, Cl. 423-20.000.
Lagabe, Andre: *See—*
Langenfeld, Michel; and Lagabe, Andre, 4,301,200, Cl. 428-33.000.
Laganas, Arthur, to R. G. Barry Corporation. Clog-type shoes and method for their production. 4,300,256, Cl. 12-142.00F.
Lai, Ralph W. M.; and Litchfield, John K., to Kennecott Corporation. Cobalt solvent extraction with dioxime ion exchangers. 4,301,124, Cl. 423-24.000.
Laithwaite, Eric R.; and Salter, Stephen H. Method of, and apparatus for, extracting energy from waves. 4,300,871, Cl. 417-331.000.
Lal, Joginder; and Senyek, Michael L., to Goodyear Tire & Rubber Company, The. Cyclic organo carbonate and sulfite coupling agents for living polymers of conjugated dienes. 4,301,258, Cl. 525-334.000.
Lal, Joginder; and Senyek, Michael L., to Goodyear Tire & Rubber Company, The. Linear organo carbonate coupling agents for living polymers of conjugated dienes. 4,301,259, Cl. 525-334.000.
Lamb, Frank H.; Lefcort, Malcolm D.; and Rada, Petr, to Enterprises International Inc. Method for generating heat from waste fuel. 4,300,460, Cl. 110-346.000.
Lambot, Honore J., to Diamant Boart. Double core barrel. 4,300,643, Cl. 175-244.000.
Lande, Maurice A.; and David, Roger J. P., to Association des Ouvriers en Instruments de Precision. Articulation for manipulator arm. 4,300,362, Cl. 64-17.00R.
Landis, Phillip S.: *See—*
Horodysky, Andrew O.; and Landis, Phillip S., 4,301,019, Cl. 252-49.600.
Landrau, Felix A.: *See—*
Eckenhoff, James B.; and Landrau, Felix A., 4,300,558, Cl. 128-260.000.
Lane, John L. Adjustable door and window security prop. 4,300,796, Cl. 292-339.000.
Lanet, Jean-Claude: *See—*
Acloque, Andre; Lanet, Jean-Claude; and Correia, Yves, 4,301,092, Cl. 260-544.00Y.
Lang, Jerome G., to Chrysler Corporation. Multi-functional assembly. 4,300,511, Cl. 123-520.000.
Langdon, Roy A.: *See—*
Dahl, Carl B.; Crouse, Jere W.; and Langdon, Roy A., 4,300,714, Cl. 226-196.000.
Langenfeld, Michel; and Lagabe, Andre, to Pont-a-Mousson S.A. Plastic tube formed by spiral winding of a snap locking profile strip. 4,301,200, Cl. 428-33.000.
Langer, Alois A.: *See—*
Kolenik, Steve; and Langer, Alois A., 4,300,567, Cl. 128-419.00D.
Langer, Horst G.: *See—*
Brady, Thomas P.; and Langer, Horst G., 4,301,025, Cl. 252-389.00A.
Lanier Business Products, Inc.: *See—*
Mohammadioun, Said; Wittler, David A.; Titus, Theodore, IV; and Plunkett, Luther C., Jr., 4,301,525, Cl. 369-29.000.
Lanning, Christie L.: *See—*
Simon, Frank J.; Reinke, William C.; Soo, Hong-Ming; Lanning, Christie L.; and Richert, Stanley H., 4,301,180, Cl. 426-250.000.
Lantech Inc.: *See—*
Stackhouse, William H., 4,300,326, Cl. 53-211.000.
Laporte, Jean Claude: *See—*
Laporte, Jean Michel; and Laporte, Jean Claude, 4,300,520, Cl. 124-9.000.
Laporte, Jean Michel; and Laporte, Jean Claude. Target throwing device. 4,300,520, Cl. 124-9.000.
Larkin, Owen: *See—*
Leclerc, Roland; and Larkin, Owen, 4,300,686, Cl. 206-506.000.
Larson, Larry L., to Dow Chemical Company, The. Insecticidal synergistic mixtures of 0,0-diethyl 0-(3,5,6-trichloro-2-pyridinyl)phosphorothioate and 3-(2,2-dichloroethenyl)-2,2-dimethylcyclopropane carboxylic acid:cyano(6-phenoay-2-pyridinyl)methyl ester. 4,301,154, Cl. 424-200.000.
Larson, Larry L., to Dow Chemical Company, The. Insecticidal synergistic mixtures of O,O-diethyl O-(3,5,6-trichloro-2-pyridinyl)phosphorothioate and 2,2,3,3-tetramethylcyclopropanecarboxylic acid:-cyano(3-phenoaypbeoyl)methyl ester. 4,301,155, Cl. 424-200.000.
Larson, Larry L., to Dow Chemical Company, The. Insecticidal synergistic mixtures of G,O-diethyl O-(3,5,6-trichloro-2-pyridinyl) phosphorothioate and 4-chloro-α-(1-methylethyl)benzeneacetic acid:-cyano (6-phenoxy-2-pyridinyl)methyl ester. 4,301,156, Cl. 424-200.000.
Latham, Allen, Jr., to Haemonetics Corporation. Rotary centrifoge seal. 4,300,717, Cl. 233-1.00A.
Lauh, Herman, III. Antidrip volumetric rapid filling machine usable with very viscous substances. 4,300,603, Cl. 141-258.000.
Laudise, Robert A.: *See—*
Kolb, Ernest D.; and Laudise, Robert A., 4,300,979, Cl. 156-623.00R.
Launay, Noel, to Societe d'Assistance Techinque pour Produits Nestle S.A. Distributor for pseudo-spherical objects. 4;300,703, Cl. 221-187.000.
Lauzon, Rodrigue V.: *See—*
Carriere, David B.; and Lauzon, Rodrigue V., 4,301,016, Cl. 252-8.50C.
Lawrence, Bernerd N. Welding clamp. 4,300,754, Cl. 269-8.000.
Lawrence, James D., to Dailey Oil Tools, Inc. Constant bottom contact tool. 4,300,636, Cl. 166-334.000.
Layer, Robert W., to B. F. Goodrich Company, The. Norbornenyl phenolic compounds. 4,301,306, Cl. 568-734.000.
Lechner, Robert, to Siemens Aktiengesellschaft. Telecommunication subscriber line access circuit with ground key and insulation fault indication. 4,301,334, Cl. 179-16.0AA.
Leclerc, Roland; and Larkin, Owen. Stackable nestable container. 4,300,686, Cl. 206-506.000.
Lee, Hsing-San, to International Business Machines Corporation. Sensing technique for memories with small cells. 4,301,519, Cl. 365-189.000.
Lee, Lin-nan; and Lu, Shyue-Ching. Reduction of message redundancy by multiple substitution: a message preprocessing scheme for secure communications. 4,301,327, Cl. 178-22.100.
Lee, Robert G. H.: *See—*
Savard, Guy; Lee, Robert G. H.; and Hornsey, Derek, 4,301,007, Cl. 210-96.100.
Lee, Tien P.: *See—*
Burrus, Charles A., Jr.; Campbell, Joe C.; Dentai, Andrew G.; and Lee, Tien P., 4,301,463, Cl. 357-30.000.
Leeb, Richard; and Helbig, Rainer J., to Hoechst Aktiengesellschaft. Ready for use, injectable, aqueous solutions of alkali metal salts of canrenoic acid and furosemide and process for their preparation. 4,301,160, Cl. 424-241.000.
Lees, Robert, to Autotote, Ltd. Document handling device providing channels for documents of two widths. 4,301,361, Cl. 235-484.000.
Leesona Corporation: *See—*
Wueger, Karl W., 4,300,599, Cl. 139-352.000.
Lefcort, Malcolm D.: *See—*
Lamb, Frank H.; Lefcort, Malcolm D.; and Rada, Petr, 4,300,460, Cl. 110-346.000.
Leger, Violeta Z.: *See—*
Evans, William P.; and Leger, Violeta Z., 4,301,220, Cl. 429-197.000.
Leighton, Betty: *See—*
Leighton, John D., 4,300,409, Cl. 74-512.000.
Leighton, John D., to Leighton, Betty, a part interest. Resilient lever assembly. 4,300,409, Cl. 74-512.000.
Leir, Charles M.; Hedberg, Kirk G.; and Jacobson, Joel R., to Minnesota Mining and Manufacturing Company. Process for 6,7-dihydro-9-fluoro-5-methyl-1-oxo-1H,5H-benzo(ij)quinolizine-2-carboxylic acid. 4,301,288, Cl. 546-94.000.
Leir, Charles M.; and Hedberg, Kirk G., to Minnesota Mining and Manufacturing Company. Process for 6,7-dihydro-9-fluoro-5-methyl-1-oxo-1H,5H-benzo(ij)quinolizine-2-carboxylic acid. 4,301,289, Cl. 546-94.000.
Leir, Charles M., to Minnesota Mining and Manufacturing Company. Intermediates for 6,7-dihydro-9-fluoro-5-methyl-1-oxo-1H,5H-benzo(ij)quinolizine-2-carboxylic acid. 4,301,291, Cl. 546-153.000.
Lemoine, Maurice G.; and Pasdera, Leonard A., to Ampex Corporation. Fast acting phase shifting apparatus for use in digital sampling systems. 4,301,466, Cl. 358-13.000.
Lenz, Henry G.: *See—*
Schweder, Walter M.; and Lenz, Henry G., 4,301,386, Cl. 310-59.000.
Lepretre, Bernard: *See—*
Deleris, Robert; and Lepretre, Bernard, 4,300,503, Cl. 123-425.000.
Leri, Dennis A., to Teledyne Industries, Inc. Tone arm mechanism. 4,301,528, Cl. 369-221.000.
Leusner, Bernd: *See—*
Suling, Carlhans; Balle, Gerhard; Leusner, Bernd; Schulz, Hans-Hermann; and Walkowiak, Michael, 4,300,886, Cl. 433-202.000.
Levinson, Samuel, to United States of America, Army. Inverter circuit with current equalization. 4,301,499, Cl. 363-26.000.
Le Von, Ernest F.: *See—*
Frank, Patricia; Kraychy, Stephen; and Le Voo, Ernest F., 4,301,140, Cl. 424-1.500.
Lewandowski, Mieczyslaw: *See—*
Schroeder, Jeizy; Lewandowski, Mieczyslaw; Kuzko, Antoni; Gorecki, Henryk; Zielinski, Krzysztof; Pozniak, Tadeusz; Zieba, Stefan; Gorecka, Helena; Pawelczyk, Adam; and Wysocki, Andizej, 4,301,130, Cl. 423-320.000.
Lewis, Geoffrey A.; and Sparks, Brian E., to Lucas Industries Limited. Fuel control system for a gas turbine engine. 4,300,348, Cl. 60-39.28R.
Lewis, Geoffrey A.; and Bottoms, Harry S., to Lucas Industries Limited. Apparatus and method for desorption of gas from a liquid. 4,300,919, Cl. 55-48.000.
Ley, Anthony J., to Solartron Electronic Group Limited. Methods and apparatus for analyzing periodic waveforms. 4,301,404, Cl. 324-77.00B.
Leybold-Heraeus GmbH: *See—*
Fischer, Bertbold; Kabelitz, Hans-Peter; Pfaff, Hansen; and Schmitz, Andreas, 4,300,875, Cl. 418-55.000.
Lieb, Claude, to Balzers Aktiengesellschaft. Holding device for electron-microscope specimens. 4,301,371, Cl. 250-443.000.

Liebel, Henry L.; and Krier, Martin, to Angleboard Inc. Freestanding honeycomb load spacer. 4,300,864, Cl. 410-154.000.

Liedtke, Kurt: *See*—
Focke, Heinz H.; and Liedtke, Kurt, 4,300,676, Cl. 206-264.000.

Life Savers, Inc.: *See*—
Witzel, Frank; Puglia, Wayne J.; Clark, K. Warren; and Mackay, Donald A. M., 4,301,178, Cl. 426-5.000.

Ligorati, Ferdinando: *See*—
Canavesi, Roberto; Ligorati, Ferdinando; and Aglietti, Giancarlo, 4,301,308, Cl. 568-804.000.

Lill, Helmut: *See*—
Bartl, Knut; Ziegenhorn, Joachim; Wunderwald, Peter; Beaucamp, Klaus; and Lill, Helmut, 4,301,028, Cl. 252-408.000.

Lilly Industries Limited: *See*—
Corfield, John R.; Johnson, Derek; and Taylor, Clifford G., 4,301,280, Cl. 544-016.000.

Lin, Perry H.: *See*—
Fernstrom, George A.; Hebeler, Harold H.; Lin, Perry H.; and Moneymaker, Robert R., 4,301,102, Cl. 264-151.000.

Lindenthal, Hans; Armasow, Waldemar; and Bretzger, Reinhard, to Voith Transmit GmbH. Articulated coupling. 4,300,361, Cl. 64-17.00R.

Lindner, Friedrich, to Deutsche Forschungs- und Versuchsanstalt fur Luft- und Raumfahrt e.V. Discharging a latent-heat accumulator. 4,300,622, Cl. 165-1.000.

Lindsay, Gene; and O'Beirne, Andrew J., to Dynasciences Corporation. Chromogenic method of detecting endotoxins in blood. 4,301,245, Cl. 435-4.000.

Linhart, Heinz: *See*—
Bachmann, Adolf; Boehler, Joachim; and Linhart, Heinz, 4,301,101, Cl. 264-130.000.

Liotta, Ronald, to Exxon Research & Engineering Co. Method for producing coke. 4,300,994, Cl. 208-8.0LE.

Liotta, Ronald, to Exxon Research & Engineering Co. Oxygen-alkylation of carbonous material and products thereof. 4,300,995, Cl. 208-8.0LE.

Litchfield, John K.: *See*—
Lai, Ralph W. M.; and Litchfield, John K., 4,301,124, Cl. 423-24.000.

Little, Keith W.: *See*—
Millar, Barry C.; and Little, Keith W., 4,300,672, Cl. 198-486.000.

Litton Systems, Inc.: *See*—
Bond, Joseph N., 4,300,475, Cl. 118-657.000.

Littrell, Denis G., to Rexnord, Inc. Apparatus and method for removing finely divided solids from gases. 4,300,921, Cl. 55-96.000.

Liu, Hsaio S.: *See*—
Refojo, Miguel F.; and Liu, Hsaio S., 4,300,557, Cl. 128-260.000.

Livsey, Norman B., to Rolls-Royce Limited. Apparatus for application of metallic coatings to metallic substrates. 4,300,474, Cl. 118-641.000.

Lockhart, David A., to Caterpillar Tractor Co. Method for making laminated spacer plate for engines. 4,300,273, Cl. 29-156.40R.

Lockheed Corporation: *See*—
Lovick, Edward, Jr., 4,301,456, Cl. 343-708.000.

Loersch, Joseph F.: *See*—
Hurwitz, Peter A.; and Loersch, Joseph F., 4,300,959, Cl. 148-127.000.

Lofthouse, Charles H., to English Clays Lovering Pochin & Company, Limited. Process for concentrating mica in a mixture of sand and mica. 4,301,001, Cl. 209-17.000.

Lohmann, Dieter; Roth, Martin; and Baumann, Marcus, to Ciba-Geigy Corporation. N-Substituted imides and bis-imides. 4,301,075, Cl. 260-326.5FM.

Lomakina, Raisa D.: *See*—
Rumyentseva, Gelina N.; Grebeshova, Renata N.; Kalunyants, Kalust A.; Artemieva, Irina V.; and Lomakina, Raisa D., 4,301,251, Cl. 435-267.000.

London, Wallace; and Meyer, Kurt L., to London, Wallace. Compact merchandising package of a flexible garment bag and collapsible hanger. 4,300,668, Cl. 206-286.000.

Loo, Billy W., to United States of America, Energy. High efficiency virtual impactor. 4,301,002, Cl. 209-143.000.

Loofbourrow, William L.: *See*—
Kaltenekker, Bela; and Loofbourrow, William L., 4,300,398, Cl. 73-849.000.

Lopatin, Jury P.: *See*—
Nikandrov, Gennady A.; Alovyainikov, Alexandr A.; Varlamova, Ljudmila V.; Vulikh, Alexandr I.; Lopatin, Jury P.; Tikhomirov, Vladimir A.; Chebukhanova, Vera A.; Preobrazhensky, Pavel S.; Spiridonov, Viktor E.; Zhelonkin, Alexandr G.; and Varlamov, Rudolf P., 4,300,925, Cl. 55-242.000.

Lorenz, Donald H.; Tu, Shu T.; and Wyman, Donald P., to GAF Corporation. Radiation curable coating composition comprising an oligomer, and an ultra-violet absorber. 4,301,209, Cl. 428-339.000.

Lori, Richard F. Ball and string skill toy. 4,300,771, Cl. 273-329.000.

Lorkin, Clive G.: *See*—
Schiffarth, Josef; Lorkin, Clive G.; and Fletcher, Kenneth J., 4,301,387, Cl. 313-355.000.

Lorntson, John M.: *See*—
Meguerian, Garbis H.; Lorntson, John M.; and Vasalos, Iacovos A., 4,300,997, Cl. 208-120.000.

Lorusso, Simone: *See*—
Palla, Ottorino; Galli, Remo; Gozzo, Franco; and Lorusso, Simone, 4,301,174, Cl. 424-300.000.

Lougheed, Robert M.: *See*—
Sternberg, Stanley R.; and Lougheed, Robert M., 4,301,443, Cl. 340-146.3MA.

Lovick, Edward, Jr., to Lockheed Corporation. Electromagnetic wave attenuating surface. 4,301,456, Cl. 343-708.000.

Lowry, Lewis R., to Westinghouse Electric Corp. Light activated silicon switch with etched channel in cathode base and anode emitter communicating with cladded optical fiber. 4,301,462, Cl. 357-30.000.

Lowther, Frank E., to Purification Sciences Inc. Internal combustion engine system technical field. 4,300,486, Cl. 123-39.000.

Lu, Shyue-Ching: *See*—
Lee, Lin-nan; and Lu, Shyue-Ching, 4,301,327, Cl. 178-22.100.

Lubin, Barry D., to Motorola, Inc. Three-party conference circuit for digital time-division-multiplex communication systems. 4,301,531, Cl. 370-62.000.

Luborsky, Fred E.; and Walter, John L., to General Electric Company. Amorphous metal alloys and ribbons thereof. 4,300,950, Cl. 75-123.00B.

Lucas Industries Limited: *See*—
Lewis, Geoffrey A.; and Sparks, Brian E., 4,300,348, Cl. 60-39.28R.
Lewis, Geoffrey A.; and Bottoms, Harry S., 4,300,919, Cl. 55-48.000.
Mowbray, Dorian F.; and Jarrett, Boaz A., 4,300,873, Cl. 417-416.000.
Smith, Trevor S., 4,300,347, Cl. 60-39.28R.

Lucas, Klaus: *See*—
Egert, Klaus; Heinrich, Wolfgang; Lucas, Klaus; Kuhlbrodt, Klaus-Otto; Berger, Friedrich; Gohler, Peter; Schingnitz, Manfred; Gross, Manfred; Jegorow, Aleksander; Fedotov, Vasilij; Gavrilin, Vladimir; Gudymov, Ernest; Semenov, Vladimir; Achmatov, Igol; Majdurov, Nikolaj; and Abraamov, Evgenij, 4,300,913, Cl. 48-67.000.

Luoma, Warren L.: *See*—
Emanuelson, Roger C.; Luoma, Warren L.; and Taylor, William A., 4,301,222, Cl. 429-231.000.

Luwa AG: *See*—
Sutter, Hans P.; and Hartmann, Josef, 4,300,711, Cl. 226-97.000.

Lynn, Peter F.: *See*—
Favin, David L.; Lynn, Peter F.; and Snyder, Paul J., 4,301,536, Cl. 371-22.000.

Lyon Metal Products, Incorporated: *See*—
Steinke, Mark H., 4,300,313, Cl. 49-463.000.

M.H. Center Limited: *See*—
Sugiuchi, Toshiyasu; Aoyama, Susumu; and Tokisue, Hiroshi, 4,300,381, Cl. 72-327.000.

Mackay, Donald A. M.: *See*—
Witzel, Frank; Puglia, Wayne J.; Clark, K. Warren; and Mackay, Donald A. M., 4,301,178, Cl. 426-5.000.

Madaffore, Frank V.: *See*—
Hochstrasser, Otto; Ruby, William S.; and Madaffore, Frank V., 4,301,320, Cl. 13-32.000.

Maeder, Edward G.; and Proctor, Harry P., to National Can Corporation. Tool pack for container body maker. 4,300,375, Cl. 72-45.000.

Maejima, Masuhiko: *See*—
Funatsu, Takenori; Maejima, Masuhiko; Inuzuka, Yoichi; and Tsuji, Kosaku, 4,301,049, Cl. 260-23.0AR.

Magnetic Weather Stripping Corp.: *See*—
Dittrich, Sebastian, 4,300,314, Cl. 49-470.000.

Magoon, Lester E.: *See*—
Magoon, Richard E.; and Magoon, Lester E., 4,300,856, Cl. 405-66.000.

Magoon, Richard E.; and Magoon, Lester E. Compactable, foldable, floatable, boom-fence to quickly control the spread of contaminates over water surfaces. 4,300,856, Cl. 405-66.000.

Maiocco, Guiseppe, to ARMAN S.p.A. Device for connecting a wiper blade holder to a wiper arm. 4,300,259, Cl. 15-250.320.

Majdurov, Nikolaj: *See*—
Egert, Klaus; Heinrich, Wolfgang; Lucas, Klaus; Kuhlbrodt, Klaus-Otto; Berger, Friedrich; Gohler, Peter; Schingnitz, Manfred; Gross, Manfred; Jegorow, Aleksander; Fedotov, Vasilij; Gavrilin, Vladimir; Gudymov, Ernest; Semenov, Vladimir; Achmatov, Igol; Majdurov, Nikolaj; and Abraamov, Evgenij, 4,300,913, Cl. 48-67.000.

Majthan, Rudolf; Stuhler, Rolf; Parsonage, Raymond G.; and Packham, Charles C., to Braun A.G. Hair dryer and method for producing a heating element therefor. 4,300,280, Cl. 29-611.000.

Maki, Melvin: *See*—
Harman, Robert K.; and Maki, Melvin, 4,300,338, Cl. 57-3.000.

Malbrunot, Pierre, to Creusot-Loire. Device for the preparation of coated bituminous products for road surfacing. 4,300,837, Cl. 366-25.000.

Malburg, Werner: *See*—
Buchs, Wolfgang; Muller, Martin; Malburg, Werner; and Seidel, Albert, 4,300,354, Cl. 62-45.000.

Mallya, Prakash: *See*—
Barabas, Eugene S.; Mallya, Prakash; and Gromelski, Stanley J., Jr., 4,301,267, Cl. 526-313.000.

Malsot, Christian; Desmurs, Roland; and Bouygues, Jean, to Socapex. Connector end fitting for optical monofibre. 4,300,815, Cl. 350-96.200.

Manne, Jack: *See*—
Batky, Lester; Batky, Michael P.; and Manne, Jack, 4,300,299, Cl. 40-607.000.

Mansbach, Lillian; and McCarter, Henry, to Becton, Dickinson and Company. Serum vitamin B_{12} assay and kit therefor. 4,300,907, Cl. 23-230.00B.

Marchant, Wayne. Hydroponic irrigation valve and system. 4,300,311, Cl. 47-62.000.

Marencak, Karol; and Rye, Grover W., to Goodyear Tire & Rubber Company, The. Vapor treatment of metal tire cord. 4,300,957, Cl. 148-6.310.

Marin, Roger A.: *See*—
Jurgensen, David J.; and Marin, Roger A., 4,301,474, Cl. 358-171.000.

Markus, Henry Z.; and McAleer, William J., to Merck & Co., Inc. High titer production of hepatitis A virus. 4,301,249, Cl. 435-235.000.

Markus, Henry Z.: *See*—
McAleer, William J.; and Markus, Henry Z., 4,301,250, Cl. 435-241.000.

Marmon Company: *See*—
Bione, Angelo A.; Sehnert, Robert J.; and Taylor, Horace E., 4,300,430, Cl. 84-1.010.
Schreier, Wilford R.; and Taylor, Horace E., 4,300,433, Cl. 84-1.170.

Marosi, Laszlo; Stabenow, Joachim; and Schwarzmann, Matthias, to BASF Aktiengesellschaft. Method for preparing crystalline SiO_2 modification. 4,300,911, Cl. 23-300.000.

Marshall, Winston S.; and Pfeifer, William, to Eli-Lilly and Company. Halogenated ethynyl biphenyls. 4,301,313, Cl. 570-128.000.

Martin, Donald P.; Hoffman, Robert C.; and Kruse, Richard H., to Qwint Systems, Inc. Dot matrix print head. 4,300,845, Cl. 400-124.000.

Martin, Donald P.: *See*—
Hoffman, Robert C.; Kruse, Richard H.; and Martin, Donald P., 4,300,847, Cl. 400-196.100.

Martin, Ernest N., to Societe d'Assistance Technique pour Produits Nestle SA. Coffee maker. 4,300,442, Cl. 99-289.00R.

Martin, Lawrence L.; and Worm, Manfred, to Hoechst-Roussel Pharmaceuticals, Incorporated. 1-[2-(4,5-Dihydro-4,4-dialkyl-2-oxazolyl)-phenyl]-4-(dialkylamino)cyclohexanol. 4,301,292, Cl. 548-239.000.

Martinez, Jean: *See*—
Bach, Jean-Francois; Dardenne, Mireille; Pleau, Jean-Marie; Hamburger, Jean; Bricas, Evanghelos; Martinez, Jean; Blanot, Didier; and Auger, Genevieve, 4,301,065, Cl. 260-112.50R.

Martino, Anthony P.: *See*—
Gandi, Robert A.; and Martino, Anthony P., 4,300,550, Cl. 128-207.180.

Maruyama, Teruo, to Matsushita Electric Industrial Co., Ltd. Rotary head assembly with lubricating double sleeve construction. 4,301,487, Cl. 360-107.000.

Maruyama, Yoshiaki: *See*—
Yano, Tadashi; Maruyama, Yoshiaki; and Toyota, Masahiro, 4,300,421, Cl. 83-99.000.

Marzocchi, Alfred; Roberts, Michael G.; Bolen, Charles E.; and Harrington, Edward R., to Owens-Corning Fiberglas Corporation. Chemically modified asphalt compositions. 4,301,051, Cl. 260-28.5AS.

Maselek, Robert J.: *See*—
Boudreau, Jon P.; Biren, Marvin A.; and Maselek, Robert J., 4,300,414, Cl. 81-64.000.

Mason, William M., to Tektronix, Inc. Color coding of write-through information in direct viewing bistable storage CRT display. 4,301,388, Cl. 313-398.000.

Masselin, Michel, to Alsthom-Atlantique. Cover mounted multi-columnar semiconductor assembly. 4,301,465, Cl. 357-82.000.

Masuda, Masafumi: *See*—
Yasuda, Nobu; Masuda, Masafumi; and Morita, Tomoichi, 4,301,210, Cl. 428-342.000.

Masuda, Shinichi; Tanaka, Tsugio; Kishi, Naoyuki; and Nagasaka, Yukio, to Atom Chemical Paint Co., Ltd. Road marking composition. 4,301,050, Cl. 260-28.00R.

Mathews, James K., to Pertron Controls Corporation. Modular microprocessor-controlled controller for resistance for resistance welding machines. 4,301,351, Cl. 219-114.000.

Mathues, Thomas P., to General Motors Corporation. Torsional vibration damper for a friction clutch. 4,300,363, Cl. 64-27.0NM.

Mathues, Thomas P., to General Motors Corporation. Vibration damper for a friction clutch. 4,300,670, Cl. 192-106.100.

Matsuda, Hisashi: *See*—
Matsuo, Takekiyo; Katakuse, Itsuo; and Matsuda, Hisashi, 4,301,369, Cl. 250-423.00R.

Matsumoto, Hiroshi: *See*—
Ogata, Masaru; Matsumoto, Hiroshi; Hirose, Katsumi; and Eigyo, Masami, 4,301,159, Cl. 424-230.000.

Matsunaga, Isao: *See*—
Oi, Nobuhiro; Aoki, Bunya; Shinozaki, Teizo; Moro, Kanji; Matsunaga, Isao; Noto, Takao; Nebashi, Toshiyuki; Harada, Yusuke; Endo, Hisao; Kimura, Takao; Okazaki, Hiroshi; Ogawa, Haruki; and Shindo, Minoru, 4,301,161, Cl. 424-246.000.

Matsuo, Takekiyo; Katakuse, Itsuo; and Matsuda, Hisashi, to Osaka University, The President of. Semiconductor ion emitter for mass spectrometry. 4,301,369, Cl. 250-423.00R.

Matsuoka, Hideoki; and Kondo, Yoshinobu, to Nissan Motor Co., Ltd.; and Fuji Kiko Co., Ltd. Emergency escape device for seat belts. 4,300,789, Cl. 280-801.000.

Matsushita Electric Industrial Co., Ltd.: *See*—
Koike, Susumu; and Iwasa, Hitoo, 4,300,960, Cl. 148-171.000.
Maruyama, Teruo, 4,301,487, Cl. 360-107.000.
Minakuchi, Hiroshi, 4,301,422, Cl. 331-1.00A.
Miura, Masayoshi; Yamamori, Kiyoshi; and Mizoguchi, Akira, 4,301,460, Cl. 346-140.00R.
Sakamoto, Naraji; Saiki, Shuji; Sato, Kazue; Murata, Kousaku; and Yamamoto, Hiroshi, 4,300,655, Cl. 181-167.000.

Matsushita Electric Works, Ltd.: *See*—
Ochi, Shuhei; Ueda, Fumiya; Morihara, Nobuyuki; Namba, Hiroshi; Nishino, Motohisa; and Yamamoto, Shigeo, 4,300,556, Cl. 128-256.000.

Matsuzaki, Atsushi: *See*—
Hatada, Toshio; Senshu, Takao; Arai, Akira; Harada, Fumio; Matsuzaki, Atsushi; Futawatari, Hajime; Imaizumi, Yutaka; and Takeda, Sumiyoshi, 4,300,629, Cl. 165-151.000.

Mattel, Inc.: *See*—
Knetzger, Robert C., 4,300,770, Cl. 273-238.000.

Matteson, Thomas O.: *See*—
Andre, Gerald R.; Wingate, David C.; and Matteson, Thomas O., 4,300,728, Cl. 242-18.00A.

Matthews, Gerald L.: *See*—
Baker, Philip G.; and Matthews, Gerald L., 4,300,827, Cl. 354-293.000.

Matthews, John A: *See*—
de la Haye, Robert; Matthews, John A; Potton, Malcolm J.; and Cook, Steven P., 4,300,850, Cl. 403-245.000.

Matthey Bishop, Inc.: *See*—
Rosenberger, Gregory J.; and Peters, Louis, 4,300,956, Cl. 148-6.300.

Maurer, Helmut, to Robert Bosch GmbH. Electrochemical sensor element construction. 4,300,990, Cl. 204-195.00S.

May, Earl L., to PPG Industries, Inc. Glass ribbon attenuating apparatus. 4,300,938, Cl. 65-182.400.

May, Michael G. Auto-igniting, four-cycle, piston-type internal combustion engine. 4,300,498, Cl. 123-263.000.

Maycock, E. Frank; and Rayer, John L., to Plastilite Corporation. Detachable nibbler stick. 4,300,304, Cl. 43-44.870.

Mayer, Endre A.; and Kelso, Charles R., to Bendix Corporation, The. Solenoid control valve. 4,300,595, Cl. 137-625.330.

Mayer, Ferdy. Radio frequency interference suppressor cable having resistive conductor and lossy magnetic absorbing material. 4,301,428, Cl. 333-12.000.

Mayer, Wolfram; Rudolph, Hans; De Cleur, Eckhard; and Schonfelder, Manfred, to Bayer Aktiengesellschaft. Ammonium salts of α-ketocarboxylic acids. 4,301,186, Cl. 427-54.100.

Mayflower Electronic Devices, Inc.: *See*—
Meenen, Raymond, 4,300,895, Cl. 493-416.000.

McAleer, William J.; and Markus, Henry Z., to Merck & Co., Inc. Method of producing hepatitis B surface antigen. 4,301,250, Cl. 435-241.000.

McAleer, William J.: *See*—
Markus, Henry Z.; and McAleer, William J., 4,301,249, Cl. 435-235.000.

McAlister, Roy E. Method for manifolding multiple passage solar panel. 4,300,971, Cl. 156-244.110.

McBrierty, Vincent J.: *See*—
Wardell, Gerald E.; and McBrierty, Vincent J., 4,301,411, Cl. 324-307.000.

McCarter, Henry: *See*—
Mansbach, Lillian; and McCarter, Henry, 4,300,907, Cl. 23-230.00B.

McCord Corporation: *See*—
Melnyk, William, 4,300,628, Cl. 165-149.000.

McCormack, John F.; and Nuzzi, Francis J., to Kollmorgen Technologies Corp. Electroless copper deposition process having faster plating rates. 4,301,196, Cl. 427-305.000.

McCoy, Reginald F. H., to Vital Industries, Inc. Combination digital-analog television switching system. 4,301,475, Cl. 358-181.000.

McCuin, Jon P.: *See*—
Castonguay, Roger N.; and McCuin, Jon P., 4,301,435, Cl. 335-26.000.

McCusker, Joseph H.; and Siener, Philip R., Jr., to Cooley Incorporated. Sheet useful as roofing. 4,301,204, Cl. 428-110.000.

McDaniel, Max P., to Phillips Petroleum Company. Silica from single phase controlled hydrolysis of silicate ester. 4,301,034, Cl. 252-452.000.

McDonald, Malvyn C.: *See*—
Catano, Paul S.; and McDonald, Malvyn C., 4,300,468, Cl. 114-340.000.

McDonnell Douglas Corporation: *See*—
Gillette, Richard J., 4,301,333, Cl. 179-15.55R.

McDonough Power Equipment, Division of Fuqua Industries Inc.: *See*—
Jackson, Harold P., 4,300,332, Cl. 56-11.300.

McElroy, Jerry W., to Emerson Electric Co. Adjustable force producing means for manually movable control levers in a space thermostat. 4,301,438, Cl. 337-339.000.

McFayden, Dennis G., to Norlin Industries, Inc. Programmable multiple phase AC power supply. 4,301,415, Cl. 328-24.000.

McFiggans, Robert B.: *See*—
Soderberg, John H.; Eckert, Alton B.; and McFiggans, Robert B., 4,301,507, Cl. 364-464.000.

McGrady, Joseph: *See*—
Wentler, George E.; McGrady, Joseph; Gosselink, Eugene P.; and Cilley, William A., 4,301,044, Cl. 252-545.000.

McKay, John; and Hawkins, Billy C. Woodburning stove. 4,300,526, Cl. 126-67.000.

McKenny, Vernon G.; and Hampton, John K., to Mostek Corporation. Programmable read only memory integrated circuit with bit-check and deprogramming modes and methods for programming and testing said circuit. 4,301,535, Cl. 371-21.000.

McLaughlin, Jay C., to General Thermal Corporation. Method of manufacturing a radiant energy collecting or emitting element. 4,300,275, Cl. 29-157.30C.
McMillan, Peter W.: *See—*
Kumar, Ananda H.; McMillan, Peter W.; and Tummala, Rao R., 4,301,324, Cl. 174-68.500.
McMurtry, David R., to Rolls-Royce Limited; and Renishaw Electrical Ltd. Contact-sensing probe. 4,301,338, Cl. 200-61.410.
McQuain, David B.: *See—*
Buirley, William L.; Koopman, Donald E.; McQuain, David B.; and Reeves, William H., 4,301,054, Cl. 260-29.4UA.
McWhorter, Thomas E.; Kekuna, Haunani; Gabel, Brian L.; and Osmundson, Eric C., to Air Products and Chemicals, Inc. In-line lin slush making for concrete cooling. 4,300,355, Cl. 62-48.000.
Mead Corporation, The: *See—*
Spamer, William S., 4,300,693, Cl. 211-49.00D.
Measells, Paul E.: *See—*
Gajewski, Henry M.; and Measells, Paul E., 4,300,559, Cl. 128-272.000.
Measurement Technology Ltd.: *See—*
Hawkes, David W.; and Hutcheon, Ian C., 4,301,403, Cl. 324-62.000.
Mechanical Technology Incorporated: *See—*
Heshmat, Hooshang, 4,300,806, Cl. 308-9.000.
Meckler, Milton. Integrated multi-duct dual-stage dual-cooling media air conditioning system. 4,300,623, Cl. 165-16.000.
Medex Inc.: *See—*
Waldbillig, Charles C., 4,300,571, Cl. 128-673.000.
Medical College of Wisconsin, Inc., The: *See—*
Stafl, Adolf, 4,300,570, Cl. 128-665.000.
Meechan, Robert M.; and Gallina, Gabriel V., to Owens-Corning Fiberglas Corporation. Foamed plastic panel connecting means. 4,300,323, Cl. 52-464.000.
Meek, James S. Automobile body dent puller. 4,300,382, Cl. 72-478.000.
Meenen, Raymond, to Mayflower Electronic Devices, Inc. Stripper roller assembly. 4,300,895, Cl. 493-416.000.
Mefina S.A.: *See—*
Beuchat, Roger; and Damond, Remy, 4,300,452, Cl. 102-270.000.
Hochstrasser, Walter P.; and Schumacher, Georges, 4,300,296, Cl. 38-17.000.
Meguerian, Garbis H.; Lomtson, John M.; and Vasalos, Iacovos A., to Standard Oil Company (Indiana). Catalytic cracking with reduced emission of noxious gas. 4,300,997, Cl. 208-120.000.
Mehl, Jack J.; and Calpin, Cyril J., to Becton, Dickinson and Company. Liquid specimen container. 4,300,404, Cl. 73-863.520.
Meininghaus, Fritz: *See—*
Hater, Martin; Meininghaus, Fritz; and Scheel, Rudiger, 4,300,939, Cl. 71-25.000.
Meissner, Bernd: *See—*
Laas, Harald; Nissen, Axel; and Meissner, Bernd, 4,301,084, Cl. 260-405.600.
Meissner, Bruno: *See—*
Schmidt, Dietrich; Meissner, Bruno; Rath, Heinz-Jorg; Regler, Dieter; and Voss, Jurgen, 4,300,965, Cl. 156-154.000.
Meland, Clifford L.; and Booth, Newell O., to United States of America, Navy. Measurement and compensation system for beam forming array. 4,301,523, Cl. 367-123.000.
Melcher, Franz-Josef; Berg, Christoph; and Knothe, Erich, to Sartorius GmbH. Electromagnetically compensating precision scale with flexure for thermal expansion. 4,300,646, Cl. 177-212.000.
Melcher, Franz-Josef: *See—*
Knothe, Erich; Melcher, Franz-Josef; Ober, Jurgen; and Behrend, Lothar, 4,300,647, Cl. 177-212.000.
Mellinger, Ralph D. Variable length tool handle. 4,300,607, Cl. 145-62.000.
Melman, Gerard J.: *See—*
Rooze, Antonius J.; den Best, Jan; and Melman, Gerard J., 4,300,616, Cl. 164-124.000.
Melnyk, William, to McCord Corporation. Heat exchanger assembly. 4,300,628, Cl. 165-149.000.
Meltz, Gerald: *See—*
Snitzer, Elias; and Meltz, Gerald, 4,300,816, Cl. 350-96.330.
Mercer, Elizabeth A.; and Eisele, John F., to Minnesota Mining and Manufacturing Company. Transparent sheet material. 4,301,195, Cl. 427-261.000.
Merck & Co., Inc.: *See—*
Bonneau, Paul-Emile, 4,300,569, Cl. 128-654.000.
Christensen, Burton G.; and DiNinno, Frank P., 4,301,074, Cl. 260-245.20R.
Markus, Henry Z.; and McAleer, William J., 4,301,249, Cl. 435-235.000.
McAleer, William J.; and Markus, Henry Z., 4,301,250, Cl. 435-241.000.
Ponpipom, Mitree M., 4,301,152, Cl. 424-182.000.
Veber, Daniel F.; and Freidinger, Roger M., 4,301,151, Cl. 424-177.000.
Mergel, Jurgen: *See—*
Divisek, Jiri; and Mergel, Jurgen, 4,300,993, Cl. 204-290.00R.
Mersmann, Heinz G.: *See—*
Goldmann, Wolf; Michaelsen, Dieter; Dreyer, Dieter; Holsiepe, Dietmar; Tiggesbaumker, Peter; Bauer, Klaus; Durr, Manfred; and Mersmann, Heinz G., 4,300,879, Cl. 432-14.000.
Messerschmitt-Boelkow-Blohm Gesellschaft mit beschraenkter Haftung: *See—*
Buchs, Wolfgang; Muller, Martin; Malburg, Werner; and Seidel, Albert. 4,300,354. Cl. 62-45.000.

Messersmith, Gailyn. Auger-fed sawdust burner with revolving hopper. 4,300,456, Cl. 110-102.000.
Metallgesellschaft Aktiengesellschaft: *See—*
Gupner, Otto, 4,300,922, Cl. 55-146.000.
Mettetal, Bert J., to Truck Safety Systems, Inc. Anti-jackknifing device. 4,300,785, Cl. 280-432.000.
Mettler, Leo L.; and Johnson, Arthur L., to Product Enterprise, Inc. Air freshener dispenser. 4,301,095, Cl. 261-30.000.
Metz, Paul, to Arbed S.A. Method of continuous reduction of iron oxides. 4,300,948, Cl. 75-34.000.
Meyer, Allen E.: *See—*
Hill, Jeremy R.; and Meyer, Allen E., 4,301,412, Cl. 324-442.000.
Hill, Jeremy R.; and Meyer, Allen E., 4,301,414, Cl. 324-446.000.
Meyer, Kurt L.: *See—*
London, Wallace; and Meyer, Kurt L., 4,300,688, Cl. 206-286.000.
Meyn, Pieter. Apparatus for weighing fowl. 4,300,644, Cl. 177-145.000.
Michaelsen, Dieter: *See—*
Goldmann, Wolf; Michaelsen, Dieter; Dreyer, Dieter; Holsiepe, Dietmar; Tiggesbaumker, Peter; Bauer, Klaus; Durr, Manfred; and Mersmann, Heinz G., 4,300,879, Cl. 432-14.000.
Michel, Pierre: *See—*
Gruet, Michel; Lafforgue, Paul; and Michel, Pierre, 4,301,123, Cl. 423-20.000.
Midland-Ross Corporation: *See—*
Jensen, Kenneth D., 4,300,583, Cl. 137-101.000.
Mier, John A. Orthodonic model trimmer aid. 4,300,883, Cl. 433-49.000.
Mignen, Bernard, to Essilor International Cie Generale d'Optique. Photochromic ophthalmic lens of organic materials. 4,300,821, Cl. 351-163.000.
Mikhailov, Gerold M.; Tyabin, Nikolai V.; Khvorostukhin, Vladimir A.; Zakharov, Valery V.; and Nikolaev, Vitaly N. Preventing deposition on the inner surfaces of heat exchange apparatus. 4,300,625, Cl. 165-95.000.
Miles Laboratories, Inc.: *See—*
Rapkin, Myron C.; and Tabb, David L., 4,301,115, Cl. 422-56.000.
Miles, Perry A., to Raytheon Company. Fire control system. 4,300,736, Cl. 244-3.130.
Millar, Barry C.; and Little, Keith W., to Bundy Corporation. Apparatus for fabricating tubing. 4,300,672, Cl. 198-486.000.
Miller, Conrad E., to Du Pont de Nemours, E. I., and Company. Antistatic backing layer for unsubbed polyester film. 4,301,239, Cl. 430-510.000.
Miller, Edward B.: *See—*
Haase, Michael A.; Miller, Edward B.; Eichelberger, Charles W.; Cutler, Scott E.; and Wojnarowski, Robert J., 4,301,509, Cl. 364-557.000.
Miller, Emmett L.; Shumka, Alex; and Gauthier, Michael K., to California Institute of Technology. Solar cell anomaly detection method and apparatus. 4,301,409, Cl. 324-158.00D.
Miller, Harvey A.; Newman, Jon P.; and Yemington, Charles R., to Perry Oceanographics, Inc. Monitoring of electrical insulation integrity. 4,301,399, Cl. 324-54.000.
Mills, James S. Surgical wrapper. 4,301,206, Cl. 428-193.000.
Mimura, Kazunobu: *See—*
Eifuku, Yoshiaki; Mimura, Kazunobu; and Okada, Yasuyuki, 4,301,514, Cl. 364-900.000.
Minakuchi, Hiroshi, to Matsushita Electric Industrial Co., Ltd. Frequency synthesizer. 4,301,422, Cl. 331-1.00A.
Mincy, Katherine S. Plant feeding device. 4,300,309, Cl. 47-48.500.
Mingos, William L.: *See—*
Cleveland, Joseph J.; Newman, Ray L.; and Mingos, William L., 4,300,627, Cl. 165-137.000.
Minnesota Mining and Manufacturing Company: *See—*
Leir, Charles M.; Hedberg, Kirk G.; and Jacobson, Joel R., 4,301,288, Cl. 546-94.000.
Leir, Charles M.; and Hedberg, Kirk G., 4,301,289, Cl. 546-94.000.
Leir, Charles M., 4,301,291, Cl. 546-153.000.
Mercer, Elizabeth A.; and Eisele, John F., 4,301,195, Cl. 427-261.000.
Minning, Charles P.; and Fleischman, George L., to Hughes Aircraft Company. Osmotic pumped heat pipe valve. 4,300,624, Cl. 165-32.000.
Minolta Camera Kabushiki Kaisha: *See—*
Kitaura, Mashio; and Taniguchi, Nobuyuki, 4,300,825, Cl. 354-34.000.
Kori, Toshitaro; and Oka, Tateki, 4,301,228, Cl. 430-122.000.
Yamanaka, Akira; and Imura, Toshinori, 4,300,823, Cl. 354-25.000.
Mirowski, Mieczyslaw: *See—*
Kolenik, Steve; and Langer, Alois A., 4,300,567, Cl. 128-419.00D.
Missouri Research Laboratories, Inc.: *See—*
Frees, Kenneth A., 4,300,867, Cl. 414-493.000.
Mitani, Masao: *See—*
Suenaga, Masahide; Shimizu, Noboru; Kudo, Mitsuhiro; Yamaguchi, Hiroshi; and Mitani, Masao, 4,301,353, Cl. 219-121.0LJ.
Mitin, Leonid A.; Fadeev, Petr Y.; Ponomarev, Leonid F.; Fadeev, Vladimir Y.; Rybert, Vyacheslav F.; Reutsky, Jury V.; Kulagin, Rim A.; Vorozheikin, Anatoly A.; Ermilov, Nikolai P.; Dimova, Lidia P.; Doskaziev, Adil G.; Korobkov, Vladlen V.; Babenko, Sergei A.; Akhmatov, Mikhail M.; Zhaksybaev, Nabi K., deceased; and by Zhaksybaeva, Ekaterina S., executrix. Apparatus for drifting openings in hard rock. 4,300,802, Cl. 299-64.000.
Mitsubishi Gas Chemical Company, Inc.: *See—*
Sugio, Akitoshi; Amemiya, Akira; Kunii, Tadashi; Furusawa, Tomotaka; Takeda, Mutsuhiko; Tanaka, Katsumasa; and Umemura, Toshikazu, 4,301,273, Cl. 528-230.000.

Mitsubishi Jukogyo Kabushiki Kaisha: *See—*
Hayashi, Masayuki; Ifuku, Yasushi; Uchiyama, Hirofumi; Kaga, Yosimi; and Nakamori, Akifumi, 4,300,448, Cl. 99-516.000.
Yano, Tadashi; Maruyama, Yoshiaki; and Toyota, Masahiro, 4,300,421, Cl. 83-99.000.
Mitsubishi Paper Mills, Ltd.: *See—*
Yasuda, Nobu; Masuda, Masafumi; and Morita, Tomoichi, 4,301,210, Cl. 428-342.000.
Miura, Masayoshi; Yamamori, Kiyoshi; and Mizoguchi, Akira, to Matsushita Electric Industrial Company, Limited. Ink ejection apparatus. 4,301,460, Cl. 346-140.00R.
Mix, Thomas W. Vapor liquid contacting. 4,301,098, Cl. 261-114.00R.
Miyamoto, Minoru: *See—*
Tanei, Tadayoshi; Miyamoto, Minoru; and Ohno, Akio, 4,301,356, Cl. 219-213.000.
Miyaoka, Minoru: *See—*
Sato, Norimoto; Miyaoka, Minoru; Yamasaki, Shin; Inoue, Kimio; Kuriyama, Akimasa; Fukui, Tsugushi; and Asai, Toshihiro, 4,300,838, Cl. 366-84.000.
Miyata, Hiromasa, to Echo, Incorporated. Cutter blade assembly for weed and grass trimmers. 4,300,336, Cl. 56-295.000.
Miyata, Katsuhiko: *See—*
Aoki, Harumi; Miyata, Katsuhiko; and Suzuki, Koji, 4,300,826, Cl. 354-60.00L.
Miyata, Osamu: *See—*
Fujiwara, Katsuji; Miyata, Osamu; and Oike, Tadashi, 4,300,588, Cl. 137-185.000.
Miyauchi, Toshimitsu: *See—*
Tsunoda, Yoshito; Miyauchi, Toshimitsu; Shigematsu, Kazuo; and Tatsuno, Kimio, 4,301,527, Cl. 369-45.000.
Miyazawa, Sadayuki; Kadowaki, Takashi; and Yamamoto, Isao, to Konishiroku Photo Industry Co., Ltd. Method for the manufacture of silver halide photographic material. 4,301,238, Cl. 430-495.000.
Mizoguchi, Akira: *See—*
Miura, Masayoshi; Yamamori, Kiyoshi; and Mizoguchi, Akira, 4,301,460, Cl. 346-140.00R.
Mizukoshi, Yukio: *See—*
Nozawa, Koji; Takegami, Norio; Mizukoshi, Yukio; and Ikkatai, Mitsuo, 4,300,668, Cl. 192-53.00F.
Mizutani, Masami: *See—*
Hino, Kazuhiko; and Mizutani, Masami, 4,300,358, Cl. 62-256.000.
Mobil Oil Corporation: *See—*
Horodysky, Andrew G.; and Landis, Phillip S., 4,301,019, Cl. 252-49.600.
Johnson, George C., 4,301,122, Cl. 423-17.000.
Prior, Maurice J., 4,300,254, Cl. 9-8.00R.
Yan, Tsoung-Yuan, 4,300,860, Cl. 405-263.000.
Young, Lewis B., 4,301,316, Cl. 585-455.000.
Young, Lewis B., 4,301,317, Cl. 585-455.000.
Mochizuki, Hidetoshi: *See—*
Otsuki, Keizo; Mochizuki, Hidetoshi; Suzuki, Akira; Adachi, Yoshio; Kosaka, Hideki; and Murakami, Gen, 4,301,464, Cl. 357-70.000.
Modeen, Douglas P.; and Sundermeyer, Frank D., to United Technologies Corporation. Run length encoder for color raster scanner. 4,301,469, Cl. 358-75.000.
Model A and Model T Motor Car Reproduction Corp., The: *See—*
Holzwarth, Robert W., 4,300,315, Cl. 49-501.000.
Modiani & Associati: *See—*
Moreno, Vitalis, 4,300,692, Cl. 211-87.000.
Modular Controls Corporation: *See—*
Kosarzecki, Constantine, 4,300,584, Cl. 137-106.000.
Mohammadioun, Said; Wittler, David A.; Titus, Theodore, IV; and Plunkett, Luther C., Jr., to Lanier Business Products, Inc. Central control system for dictation. 4,301,525, Cl. 369-29.000.
Moherek, Edward F. Apparatus for uniformly dispensing and distributing material. 4,300,725, Cl. 239-684.000.
Mojonnier Bros. Co.: *See—*
Skoli, Sigmund P.; Dulian, Robert J.; and Kemp, David M., 4,300,923, Cl. 55-196.000.
Moller, Hilmar: *See—*
Bauer, Gunther; Burghardt, Wolfgang; and Moller, Hilmar, 4,300,344, Cl. 57-288.000.
Momura, Toshihiro J., to Kabushiki Kaisha Universal. Kicker apparatus for pinball machine. 4,300,769, Cl. 273-129.00V.
Monarch Machine Tool Company, The: *See—*
Gusching, Nagle V.; and Wagner, Ted R., 4,300,418, Cl. 82-36.00A.
Moneymaker, Robert R.: *See—*
Fernstrom, George A.; Hebeler, Harold H.; Lin, Perry H.; and Moneymaker, Robert R., 4,301,102, Cl. 264-151.000.
Monhemius, Andrew J.: *See—*
Burkin, Alfred R.; and Monhemius, Andrew J., 4,301,125, Cl. 423-150.000.
Monsanto Company: *See—*
Dutra, Gerard A.; and Sikorski, James A., 4,300,943, Cl. 71-87.000.
Kaufman, Robert J., 4,300,942, Cl. 71-87.000.
Wilder, Gene R., 4,301,260, Cl. 525-348.000.
Montague, Albert. Bi-loop heat recovery system. 4,300,527, Cl. 126-112.000.
Montedison S.p.A.: *See—*
Palla, Ottorino; Galli, Remo; Gozzo, Franco; and Lorusso, Simone, 4,301,174, Cl. 424-300.000.
Montooth, George A., to Recreation Industries Company. Wheel support for bow end of a boat. 4,300,252, Cl. 9-1.200.
Moore, John D.; and Feast, Alan A. J., to I.S.R. Holding, S.a.r.l. Emulsion polymerization process. 4,301,264, Cl. 526-86.000.

Moore, Richard F., to Combustion Engineering, Inc. Adjustable submerged scraper conveyor seal trough. 4,300,457, Cl. 110-171.000.
Moore, Timothy J.: *See—*
Orlandi, John F.; and Moore, Timothy J., 4,300,339, Cl. 57-58.340.
Moran, Gregory F.: *See—*
Eddleman, Roy T.; and Moran, Gregory F., 4,301,010, Cl. 210-406.000.
Eddleman, Roy T.; and Moran, Gregory F., 4,301,118, Cl. 422-101.000.
Morcos, George A.: *See—*
Morcos, Joseph A.; and Morcos, George A., 4,300,443, Cl. 99-332.000.
Morcos, Joseph A.; and Morcos, George A., to Morcos, Joseph A. Broiling apparatus. 4,300,443, Cl. 99-332.000.
Moreno, Vitalis, to Modiani & Associati. Latching hook structure for supporting vendible articles, particularly trinkets and the like. 4,300,692, Cl. 211-87.000.
Morgan, Donald B.: *See—*
Rodowsky, Stanley J., Jr.; and Morgan, Donald B., 4,300,262, Cl. 15-387.000.
Morihara, Nobuyuki: *See—*
Ochi, Shuhei; Ueda, Fumiya; Morihara, Nobuyuki; Namba, Hiroshi; Nishino, Motohisa; and Yamamoto, Shigen, 4,300,556, Cl. 128-256.000.
Morii, Takashi; and Kurata, Junichi, to Pioneer Electronic Corporation. Tonearm control system based on absolute tonearm position. 4,301,526, Cl. 369-33.000.
Morimoto, Shuzo, to Janome Sewing Machine Co., Ltd. Needle threading device for sewing machines. 4,300,463, Cl. 112-225.000.
Morin, Robert W., to Boston Machine Works Company. Solvent type cementer. 4,300,472, Cl. 118-245.000.
Morinaga, Masaru, to NSK-Warner K.K. Seat belt take-up device provided with an emergency-locking mechanism. 4,300,733, Cl. 242-107.40A.
Morita, Tomoichi: *See—*
Yasuda, Nobu; Masuda, Masafumi; and Morita, Tomoichi, 4,301,210, Cl. 428-342.000.
Moritz, Joseph J.: *See—*
Buckholtz, Harry E.; Moritz, Joseph J.; and Wisnouskas, Joseph S., 4,301,014, Cl. 210-721.000.
Morizumi, Mitsuo; and Kawahata, Masahiro, to Nissan Motor Co., Ltd.; and Katakura Chikkarin Co. Liquefied gas overcharge prevention device. 4,300,590, Cl. 137-413.000.
Moro, Kanji: *See—*
Oi, Nobuhiro; Aoki, Bunya; Shinozaki, Teizo; Moro, Kanji; Matsunaga, Isao; Noto, Takao; Nebashi, Toshiyuki; Harada, Yusuke; Endo, Hisao; Kimura, Takao; Okazaki, Hiroshi; Ogawa, Haruki; and Shindo, Minoru, 4,301,161, Cl. 424-246.000.
Morris, Earl R., to Beheim, Eric. Music stand tray accessory. 4,300,743, Cl. 248-441.00R.
Morris, Robert L.: *See—*
Scotese, Anthony C.; Morris, Robert L.; and Santilli, Arthur A., 4,301,281, Cl. 544-80.000.
Morrison, Donald C. Rotary action firearm safety assembly operable with finger on the trigger. 4,300,301, Cl. 42-70.00E.
Mosher, Carol W.: *See—*
Acton, Edward M.; and Mosher, Carol W., 4,301,277, Cl. 536-17.00A.
Moskovsky, Vladislav G.: *See—*
Shipai, Andrei K.; Zolotovsky, Anatoly I.; Moskovsky, Vladislav G.; Naumenko, Nikolai N.; Shimanovich, Vladimir D.; and Kiselevsky, Leonid I., 4,301,352, Cl. 219-121.0PR.
Mostek Corporation: *See—*
McKenny, Vernon G.; and Hampton, John K., 4,301,535, Cl. 371-21.000.
Motegi, Tsunen: *See—*
Heshimoto, Mitsuyoshi; Hosokawa, Kiyoshi; and Motegi, Tsuneo, 4,301,269, Cl. 528-34.000.
Motorola, Inc.: *See—*
Bruckert, Eugene J.; and Cooper, Morgan H., 4,301,444, Cl. 340-870.020.
Carlson, Richard L.; and Davidson, Allen L., 4,301,432, Cl. 333-164.000.
Cohlman, Donald C.; and Schroeder, Daniel R., 4,301,378, Cl. 307-115.000.
Lubin, Barry D., 4,301,531, Cl. 370-62.000.
Petrie, Adelore F., 4,300,518, Cl. 123-609.000.
Thomas, James S., 4,301,380, Cl. 307-362.000.
Motosugi, Katsubiko; Takahashi, Hiroshi; Toyoda, Shuhei; and Tanahashi, Toshio, to Toyota Jidosha Kogyo Kabushiki Kaisha. Intake system of a multi-cylinder internal combustion engine. 4,300,500, Cl. 123-308.000.
Mourou, Gerard, to University of Rochester. Light activated solid state switch. 4,301,362, Cl. 250-211.00J.
Mowbray, Dorian F.; and Jarrett, Boaz A., to Lucas Industries Limited. Fuel injection systems. 4,300,873, Cl. 417-416.000.
Mucke, Gert: *See—*
Berger, Bernd; Mucke, Gert; Thies, Helmut; Neuschutz, Eberhard; and Oppermann, Heinz, 4,300,403, Cl. 73-862.070.
Muenster, Alfred; and Rohmann, Michael, to BASF Aktiengesellschaft. Manufacture of polymers of acrylic acid or methacrylic acid. 4,301,266, Cl. 526-212.000.
Mulder, Arjen J., to NSM Apparatebau GmbH Kommanditgesellschaft. Circuit for controlling the frequency of a pulse generator associated with a microprocessor. 4,301,423, Cl. 331-1.00R.

Muller, Martin: *See*—
Buchs, Wolfgang; Muller, Martin; Malburg, Werner; and Seidel, Albert, 4,300,354, Cl. 62-45.000.
Muller, Rainer: *See*—
Frewer, Hans; Muller, Rainer; and Schiffers, Ulrich, 4,300,916, Cl. 48-210.000.
Muller, Rolf; Hartmann, Werner; and Kuca, Zdenek, to Chemische Werke Lowi GmbH. Process for the preparation of dicyclopentylene [2,2'-bis(4-alkyl-6-t-butylphenols)]. 4,301,311, Cl. 568-719.000.
Mullich, Richard O.; and Hunter, William R., to Tre Corporation. Key retaining cylinder for a lock. 4,300,374, Cl. 70-389.000.
Munroe, Ronald G., to Skyronics Aviation Inc. Solar hot water collector. 4,300,535, Cl. 126-432.000.
Muntzer, John: *See*—
Houser, William; and Muntzer, John, 4,300,412, Cl. 81-53.00R.
Murakami, Gen: *See*—
Otsuki, Keizo; Mochizuki, Hidetoshi; Suzuki, Akira; Adachi, Yoshio; Kosaka, Hideki; and Murakami, Gen, 4,301,464, Cl. 357-70.000.
Muranaga, Yoshinobu: *See*—
Shimizu, Tomohiro; and Muranaga, Yoshinobu, 4,301,511, Cl. 364-709.000.
Murata, Kousaku: *See*—
Sakamoto, Naraji; Saiki, Shuji; Sato, Kazue; Murata, Kousaku; and Yamamoto, Hiroshi, 4,300,655, Cl. 181-167.000.
Murray, Charles R.: *See*—
Barnes, John G.; and Murray, Charles R., 4,300,892, Cl. 493-193.000.
Murray, Ronald A., to TRW Inc. Blind clip fastener. 4,300,865, Cl. 411-15.000.
Muse, Edward T., to Smoker Products, Inc. Cooker support system. 4,300,444, Cl. 99-448.000.
Musgrove, Donovon E.; and Vos, Wilbur D. Foldable chair with sun shade and tray. 4,300,798, Cl. 297-184.000.
Muting, Frank, to Deutsche Telephonwerke und Kabelindustrie Aktiengesellschaft. Hybrid circuit. 4,301,336, Cl. 179-170.0NC.
Mutsaers, Cornelis A. H. A.: *See*—
Boonstra, Alexander H.; and Mutsaers, Cornelis A. H. A., 4,301,042, Cl. 252-521.000.
Myrick, David T.: *See*—
Comparato, Joseph R.; Hartman, Ernest L.; Zielinski, Edward A.; and Myrick, David T., 4,300,458, Cl. 110-263.000.
Naarmann, Herbert: *See*—
Degen, Hans-Juergen; and Naarmann, Herbert, 4,301,272, Cl. 528-183.000.
Nadkarni, Vikas M.: *See*—
Kane, John L.; and Nadkarni, Vikas M., 4,300,876, Cl. 425-66.000.
Nagasaka, Yukio: *See*—
Masuda, Shinichi; Tanaka, Tsugio; Kishi, Naoyuki; and Nagasaka, Yukio, 4,301,050, Cl. 260-28.00R.
Nagel, Harry C.; and Kuhn, John J., to American Standard Inc. Electronic overload protection circuit. 4,301,490, Cl. 361-89.000.
Nahm, Helmut; and Granzer, Ernold, to Hoechst Aktiengesellschaft. 4-Phenoxy-phenoxy-alkane-carboxylic acid derivatives and process for their manufacture. 4,301,295, Cl. 560-62.000.
Naito, Kazuo: *See*—
Honda, Toshio; Ogawa, Masao; Fukuura, Yukio; Ishikawa, Hikaru; Naito, Kazuo; Akiyama, Setsuo; and Tanuma, Itsuo, 4,300,970, Cl. 156-244.110.
Nakahashi, Ken-ichi, to Olympus Optical Co., Ltd. Optical system for endoscopes. 4,300,812, Cl. 350-42.000.
Nakama, Kazumitsu, to Showa Denko Kabushiki Kaisha. Agent and method for accelerating the maturation of field and garden crops. 4,300,941, Cl. 71-65.000.
Nakamori, Akifumi: *See*—
Hayashi, Masayuki; Ifuku, Yasushi; Uchiyama, Hirofumi; Kaga, Yosimi; and Nakamori, Akifumi, 4,300,448, Cl. 99-516.000.
Nakamura, Kotaro; Suzuki, Yoshiaki; Hara, Hiroshi; Sawada, Satoru; and Oono, Shigeru, to Fuji Photo Film Co., Ltd. Method of stabilizing organic substrate materials to light. 4,301,223, Cl. 430-17.000.
Nakamura, Masaaki; and Ueba, Hisaaki, to Kureha Kagaku Kogyo Kabushiki Kaisha; and Kureha Gosen Kabushiki Kaisha. Gut. 4,300,343, Cl. 57-251.000.
Nakamura, Norimi: *See*—
Katayama, Yoshiyuki; Hasegawa, Shigekazu; Okuyama, Shigeaki; and Nakamura, Norimi, 4,300,638, Cl. 172-10.000.
Nakamura, Yasuhiko: *See*—
Sugie, Hiromichi; Akado, Hajime; Yamashita, Akira; and Nakamura, Yasuhiko, 4,300,928, Cl. 55-385.00R.
Nakanishi, Kiyoshi; Okumura, Takeshi; Deguchi, Ryuichi; and Tanahashi, Toshio, to Toyota Jidosha Kogyo Kabushiki Kaisha. Combustion chamber of an internal combustion engine. 4,300,499, Cl. 123-307.000.
Nakashima, Kunimichi: *See*—
Nomura, Kenji; Tsuboi, Akira; and Nakashima, Kunimichi, 4,300,278, Cl. 29-568.000.
Nakata, Shinji: *See*—
Taniguchi, Masaaki; Nakata, Shinji; and Ueki, Susumu, 4,300,666, Cl. 191-23.00A.
Nakazima, Hiromu, to Kabushikikaisha Nakazima. Process for producing large-sized rectangular or square steel pipes. 4,301,348, Cl. 219-61.200.
Nalco Chemical Company: *See*—
Kugel, Roger W., 4,300,908, Cl. 23-230.00R.
Vartiak, Joseph F., 4,300,861, Cl. 405-264.000.
Namba, Hiroshi: *See*—
Ochi, Shuhei; Ueda, Fumiya; Morihara, Nobuyuki; Namba, Hiroshi; Nishino, Motohisa; and Yamamoto, Shigeo, 4,300,556, Cl. 128-256.000.
Narwid, Thomas A.: *See*—
Despreaux, Carl; Narwid, Thomas A.; Palleroni, Norberto J.; and Uskokovic, Milan R., 4,301,246, Cl. 435-58.000.
Nashua Corporation: *See*—
Cormier, Raymond G.; and Guiguizian, Jacques, 4,300,830, Cl. 355-3.0SH.
National Can Corporation: *See*—
Maeder, Edward G.; and Proctor, Harry P., 4,300,375, Cl. 72-45.000.
National Computer Systems, Inc.: *See*—
Bohrer, James B.; and Collins, Robert T., 4,300,791, Cl. 283-38.000.
National Research Development, Inc.: *See*—
Hayes, Edward O., 4,301,133, Cl. 423-442.000.
Nauheimer, James F.: *See*—
Benzschawel, Steven J.; and Nauheimer, James F., 4,300,679, Cl. 206-424.000.
Naumenko, Nikolai N.: *See*—
Shipai, Andrei K.; Zolotovsky, Anatoly I.; Moskovsky, Vladislav G.; Naumenko, Nikolai N.; Shimanovich, Vladimir D.; and Kiselevsky, Leonid I., 4,301,352, Cl. 219-121.0PR.
Nava, Pier L.; Testa, Carlo; and Frigerio, Davide, to Nava, Pier Luigi. Molded reinforced article and method. 4,300,242, Cl. 2-412.000.
Nava, Pier Luigi: *See*—
Nava, Pier L.; Testa, Carlo; and Frigerio, Davide, 4,300,242, Cl. 2-412.000.
Naylor, Arthur V.; and Spencer, John K., to Baker Perkins Holdings Limited. Feeding of a continuous rope of candy or like confectionery material. 4,300,329, Cl. 53-506.000.
Nazem, Faramarz; and Stroup, Robert C., to Union Carbide Corporation. Process for spinning pitch fiber into a hot gaseous environment. 4,301,135, Cl. 423-447.400.
NCR Corporation: *See*—
Ellsworth, William C., 4,301,516, Cl. 365-15.000.
Jansen, Augustinus M.; and Groot, Arien, 4,301,417, Cl. 329-50.000.
Reinert, John R., 4,301,379, Cl. 307-290.000.
Nebashi, Toshiyuki: *See*—
Oi, Nobuhiro; Aoki, Bunya; Shinozaki, Teizo; Moro, Kanji; Matsunaga, Isao; Noto, Takao; Nebashi, Toshiyuki; Harada, Yusuke; Endo, Hisao; Kimura, Takao; Okazaki, Hiroshi; Ogawa, Haruki; and Shindo, Minoru, 4,301,161, Cl. 424-246.000.
Negersmith, Kent M., to Technicon Instruments Corp. Method for the operation of automated analysis apparatus. 4,300,906, Cl. 23-230.00A.
Negro, Guido; and Fitzel, Reinhold, to Bielomatik Leuze & Co. Apparatus for driving a plurality of units. 4,300,406, Cl. 74-54.000.
Neininger, Gunter; and Hahn, Bernard, to International Standard Electric Corporation. Radar device for simultaneously measuring distance and relative speed. 4,301,453, Cl. 343-9.00R.
Nelson, Bennie C., Jr.: *See*—
Gardner, Jeffrey M.; and Nelson, Bennie C., Jr., 4,300,687, Cl. 206-279.000.
Nelson, Norman A., to Upjohn Company, The. 16-Phenoxy PGE_2 compounds. 4,301,294, Cl. 560-53.000.
Nettleton, Donald E., Jr.; Bush, James A.; and Bradner, William T., to Bristol-Myers Company. Fermentation process for making rachelmycin. 4,301,248, Cl. 435-119.000.
Neubert, Terry C., to General Tire & Rubber Company, The. Adhesion of polyamide or polyester cords to rubber. 4,300,972, Cl. 156-307.500.
Neukirchen, Ernst; and Kerscher, Utto, to Chemische Fabrik Kalk GmbH. Flameproofing additives for thermoplastic synthetic resins. 4,301,058, Cl. 260-40.00R.
Neuland, Erich; and Neuland, Rudolf L. Display boards. 4,300,300, Cl. 40-610.000.
Neuland, Rudolf L.: *See*—
Neuland, Erich; and Neuland, Rudolf L., 4,300,300, Cl. 40-610.000.
Neuschutz, Eberhard: *See*—
Berger, Bernd; Mucke, Gert; Thies, Helmut; Neuschutz, Eberhard; and Oppermann, Heinz, 4,300,403, Cl. 73-862.070.
New Stone, Inc.: *See*—
Frost, Paul E.; and Stewart, James R., 4,300,319, Cl. 52-11.000.
Newman, Jon P.: *See*—
Miller, Harvey A.; Newman, Jon P.; and Yemington, Charles R., 4,301,399, Cl. 324-54.000.
Newman, Ray L.: *See*—
Cleveland, Joseph J.; Newman, Ray L.; and Mingos, William L., 4,300,627, Cl. 165-137.000.
Ney, Robert J.: *See*—
Hafner, Erich; and Ney, Robert J., 4,300,272, Cl. 29-25.350.
Nichols-Homeshield, Inc.: *See*—
Johnson, Morris E.; Voorhes, William G.; and Breneiser, Dennis L., 4,300,379, Cl. 72-258.000.
Nicks, Larry J.: *See*—
Atkinson, Gary B.; Nicks, Larry J.; and Bauer, Donald J., 4,301,032, Cl. 252-443.000.
Niehaus, William C., to Bell Telephone Laboratories, Incorporated. Process for producing contact to GaAs active region. 4,301,188, Cl. 427-88.000.
Nienstedt, Richard. Door locking with movable code elements. 4,300,372, Cl. 70-213.000.
Niezgoda, Anna: *See*—
Kiedik, Maciej; Kolt, Jozef; Czyz, Jerzy; Grzywa, Edward; Niezgoda, Anna; and Terelak, Kazimierz, 4,301,305, Cl. 568-727.000.

Nikandrov, Gennady A.; Alovyainikov, Alexandr A.; Varlamova, Ljudmila V.; Vulikh, Alexandr I.; Lopatin, Jury P.; Tikhomirov, Vladimir A.; Chebukhanova, Vera A.; Preobrazhensky, Pavel S.; Spiridonov, Viktor E.; Zhelonkin, Alexandr G.; and Varlamov, Rudolf P. Gas purifying filter. 4,300,925, Cl. 55-242.000.
Nikki-Universal Co., Ltd.: *See*—
Takumi, Shizuo; Hashimoto, Toshio; and Akimoto, Fumio, 4,301,033, Cl. 252-448.000.
Nikolaev, Vitaly N.: *See*—
Mikhailov, Gerold M.; Tyabin, Nikolai V.; Khvorostukhin, Vladimir A.; Zakharov, Valery V.; and Nikolaev, Vitaly N., 4,300,625, Cl. 165-95.000.
Nippon Cable System Inc.: *See*—
Yoshifuji, Junnosuke, 4,300,408, Cl. 74-301.00R.
Nippon Electric Co., Ltd.: *See*—
Kage, Kouzou, 4,301,539, Cl. 375-107.000.
Taguchi, Tetsu, 4,301,329, Cl. 179-1.0SA.
Tanaka, Koichi; and Amazawa, Kiyoshi, 4,301,541, Cl. 455-221.000.
Nippon Gakki Seizo Kabushiki Kaisha: *See*—
Suzuki, Shigeru, 4,301,481, Cl. 360-62.000.
Takanashi, Hiroyoshi, 4,301,485, Cl. 360-96.500.
Yokoyama, Kenji, 4,301,421, Cl. 330-253.000.
Nippon Gohsei Kagaku Kogyo Kabushiki Kaisha: *See*—
Hasegawa, Masayasu; Nishikawa, Hideo; and Yoshida, Kayoko, 4,301,162, Cl. 424-263.000.
Nippon Kasei Chemical Co., Ltd.: *See*—
Kameyama, Akinori; Saito, Hiroyasu; and Inomata, Jihei, 4,301,263, Cl. 526-68.000.
Nippon Light Metal Co., Ltd.: *See*—
Sakaki, Hirokazu; Shirai, Akira; and Ohashi, Azusa, 4,301,229, Cl. 430-158.000.
Nippon Soken, Inc.: *See*—
Hattori, Tadashi; Takada, Shigetaka; Hayashi, Kenji; and Iwata, Toshiharu, 4,300,490, Cl. 123-439.000.
Nippon Telegraph & Telephone Public Corporation: *See*—
Shimizu, Sachinobu, 4,300,390, Cl. 73-178.00R.
Nippondenso Co., Ltd.: *See*—
Sugie, Hiromichi; Akado, Hajime; Yamashita, Akira; and Nakamura, Yasuhiko, 4,300,928, Cl. 55-385.00R.
Nishikawa, Hideo: *See*—
Hasegawa, Masayasu; Nishikawa, Hideo; and Yoshida, Kayoko, 4,301,162, Cl. 424-263.000.
Nishino, Motohisa: *See*—
Ochi, Shuhei; Ueda, Fumiya; Morihara, Nobuyuki; Namba, Hiroshi; Nishino, Motohisa; and Yamamoto, Shigeo, 4,300,556, Cl. 128-256.000.
Nishio, Shintaro: *See*—
Ohno, Kiyotaka; Nishiyama, Hisao; and Nishio, Shintaro, 4,301,164, Cl. 424-263.000.
Nishiyama, Hisao: *See*—
Ohno, Kiyotaka; Nishiyama, Hisao; and Nishio, Shintaro, 4,301,164, Cl. 424-263.000.
Nissan Motor Company, Limited: *See*—
Chiba, Masao; and Fujishiro, Takeshi, 4,300,991, Cl. 204-195.00S.
Hayakawa, Yukio, 4,300,516, Cl. 123-571.000.
Ishida, Yoshiyuki; and Satoh, Seikoh, 4,300,510, Cl. 123-512.000.
Kubota, Hitoshi; Hayashida, Yoshihiro; and Kutsuma, Hironori, 4,301,440, Cl. 340-59.000.
Matsuoka, Hideoki; and Kondo, Yoshinobu, 4,300,789, Cl. 280-801.000.
Morizumi, Mitsuo; and Kawahata, Masahiro, 4,300,590, Cl. 137-413.000.
Nozawa, Koji; Takegami, Norio; Mizukoshi, Yukio; and Ikkatai, Mitsuo, 4,300,668, Cl. 192-53.00F.
Suzuki, Suzuo, 4,300,501, Cl. 123-339.000.
Taniguchi, Masaaki; Nakata, Shinji; and Ueki, Susumu, 4,300,666, Cl. 191-23.00A.
Nissel, Jurgen, to Pintsch Bamag Antriebs-und Verkehrstechnik GmbH. Sealing arrangement for rotatably mounted shafts. 4,300,772, Cl. 277-3.000.
Nissen, Axel: *See*—
Laas, Harald; Nissen, Axel; and Meissner, Bernd, 4,301,084, Cl. 260-405.600.
Nisshin Flour Milling Co., Ltd.: *See*—
Shibata, Kenji; and Ozima, Masami, 4,301,148, Cl. 424-93.000.
Nitto Chemical Industry Co., Ltd.: *See*—
Kametani, Yoshiya; and Iino, Yasuo, 4,301,297, Cl. 560-217.000.
Nitto Kasei Co., Ltd.: *See*—
Imazaki, Hideyuki; Fujikawa, Masazumi; and Kariya, Hiromitsu, 4,301,173, Cl. 424-288.000.
NL Industries, Inc.: *See*—
Carriere, David B.; and Lauzon, Rodrigue V., 4,301,016, Cl. 252-8.50C.
Noda, Ryuzo: *See*—
Shirouzu, Shunji; and Noda, Ryuzo, 4,300,395, Cl. 73-708.000.
Nolte, Karl-Heinz: *See*—
Juraschek, Richard; and Nolte, Karl-Heinz, 4,300,476, Cl. 118-694.000.
Nomura, Kenji; Tsuboi, Akira; and Nakashima, Kunimichi, to Toyoda Koki Kabushiki Kaisha. Tool exchanger for a machine tool. 4,300,278, Cl. 29-568.000.
Norbedo, Robert A.: *See*—
Fahey, Robert J.; Norbedo, Robert A.; and Resnick, Martin L., 4,301,515, Cl. 364-900.000.
Nordischer Maschinenbau Rud. Baader GmbH & Co. K.G.: *See*—
Gotz, Klaus, 4,300,263, Cl. 17-45.000.
Nordson Corporation: *See*—
Cobbs, Walter H., Jr.; and Rehman, William R., 4,301,119, Cl. 422-133.000.
Norlin Industries, Inc.: *See*—
McFayden, Dennis G., 4,301,415, Cl. 328-24.000.
Norsk Hydro a.s.: *See*—
Solheim, Peder R.; and Wallevik, Oddmund, 4,301,339, Cl. 200-146.00R.
North, Bernard F., to Sun Chemical Corporation. Compositions for treating textile fabrics. 4,300,898, Cl. 8-185.000.
North Carolina State University at Raleigh: *See*—
Hoover, Maurice W., 4,300,447, Cl. 99-516.000.
Notaro, Frank; Acharya, Arun; and Kather, Kenneth C., to Union Carbide Corporation. Refrigeration storage assembly. 4,300,356, Cl. 62-50.000.
Noto, Takao: *See*—
Oi, Nobuhiro; Aoki, Bunya; Shinozaki, Teizo; Moro, Kanji; Matsunaga, Isao; Noto, Takao; Nebashi, Toshiyuki; Harada, Yusuke; Endo, Hisao; Kimura, Takao; Okazaki, Hiroshi; Ogawa, Haruki; and Shindo, Minoru, 4,301,161, Cl. 424-246.000.
Nozawa, Koji; Takegami, Norio; Mizukoshi, Yukio; and Ikkatai, Mitsuo, to Nissan Motor Co., Ltd. Synchromesh device for a transmission of an industrial truck. 4,300,668, Cl. 192-53.00F.
NSK-Warner K.K.: *See*—
Morinaga, Masaru, 4,300,733, Cl. 242-107.40A.
NSM Apparatebau GmbH Kommanditgesellschaft: *See*—
Mulder, Arjen J., 4,301,423, Cl. 331-1.00R.
Nucleonic Data Systems: *See*—
Bertin, Michale C.; and Carson, Mark A., 4,301,366, Cl. 250-308.000.
Nuese, Charles J.: *See*—
Ettenberg, Michael; and Nuese, Charles J., 4,300,811, Cl. 350-1.100.
Nuzzi, Francis J.: *See*—
McCormack, John F.; and Nuzzi, Francis J., 4,301,196, Cl. 427-305.000.
O'Beirne, Andrew J.: *See*—
Lindsay, Gene; and O'Beirne, Andrew J., 4,301,245, Cl. 435-4.000.
Ober, Jurgen: *See*—
Knothe, Erich; Melcher, Franz-Josef; Ober, Jurgen; and Behrend, Lothar, 4,300,647, Cl. 177-212.000.
Occidental Oil Shale, Inc.: *See*—
Ricketts, Thomas E., 4,300,800, Cl. 299-2.000.
Occidental Research Corporation: *See*—
Williams, Kenneth A.; and Bauer, Hans F., 4,301,137, Cl. 423-481.000.
Ochi, Shuhei; Ueda, Fumiya; Morihara, Nobuyuki; Namba, Hiroshi; Nishino, Motohisa; and Yamamoto, Shigeo, to Matsushita Electric Works, Ltd. Facial beauty device. 4,300,556, Cl. 128-256.000.
Odenwalder, Heinrich: *See*—
Puschel, Walter; Odenwalder, Heinrich; and Ranz, Erwin, 4,301,243, Cl. 430-613.000.
Oelrich, Hermann: *See*—
Tetenborg, Konrad; and Oelrich, Hermann, 4,300,600, Cl. 141-10.000.
Ogata, Masaru; Matsumoto, Hiroshi; Hirose, Katsumi; and Eigyo, Masami, to Shionogi & Co., Ltd. N-(Diethylaminoethyl)-2-alkoxybenzamide derivatives. 4,301,159, Cl. 424-230.000.
Ogawa, Haruki: *See*—
Oi, Nobuhiro; Aoki, Bunya; Shinozaki, Teizo; Moro, Kanji; Matsunaga, Isao; Noto, Takao; Nebashi, Toshiyuki; Harada, Yusuke; Endo, Hisao; Kimura, Takao; Okazaki, Hiroshi; Ogawa, Haruki; and Shindo, Minoru, 4,301,161, Cl. 424-246.000.
Ogawa, Masao: *See*—
Honda, Toshio; Ogawa, Masao; Fukuura, Yukio; Ishikawa, Hikaru; Naito, Kazuo; Akiyama, Setsuo; and Tanuma, Itsuo, 4,300,970, Cl. 156-244.110.
Ogawa, Tadashi: *See*—
Sato, Reisuke; and Ogawa, Tadashi, 4,301,540, Cl. 455-180.000.
Ohashi, Azusa: *See*—
Sakaki, Hirokazu; Shirai, Akira; and Ohashi, Azusa, 4,301,229, Cl. 430-158.000.
O'Haver, Thomas C.: *See*—
Harnly, James M.; O'Haver, Thomas C.; Wolf, Wayne R.; and Golden, Bruce M., 4,300,833, Cl. 356-307.000.
Ohba, Shinya: *See*—
Takemoto, Iwao; Kubo, Masaharu; Ohba, Shinya; Tanaka, Shuhei; and Aoki, Masakazu, 4,301,477, Cl. 358-213.000.
Ohno, Akio: *See*—
Tanei, Tadayoshi; Miyamoto, Minoru; and Ohno, Akio, 4,301,356, Cl. 219-213.000.
Ohno, Kiyotaka; Nishiyama, Hisao; and Nishio, Shintaro, to Toray Industries, Inc. 5,6,7-Trinor-4,8-inter-m-phenylene PGI_2 derivatives. 4,301,164, Cl. 424-263.000.
Oi, Nobuhiro; Aoki, Bunya; Shinozaki, Teizo; Moro, Kanji; Matsunaga, Isao; Noto, Takao; Nebashi, Toshiyuki; Harada, Yusuke; Endo, Hisao; Kimura, Takao; Okazaki, Hiroshi; Ogawa, Haruki; and Shindo, Minoru, to Chugai Seiyaku Kabushiki Kaisha. Cephalosporin derivatives. 4,301,161, Cl. 424-246.000.
Oike, Tadashi: *See*—
Fujiwara, Katsuji; Miyata, Osamu; and Oike, Tadashi, 4,300,588, Cl. 137-185.000.
Oiltrol, Inc.: *See*—
Santamaria, Joseph P., 4,300,857, Cl. 405-70.000.
Oishi, Kengo; and Suzuki, Osamu, to Fuji Photo Film Co., Ltd. Tape clamp for magnetic tape magazine. 4,300,729, Cl. 242-74.100.

Oka, Tateki: *See—*
Kori, Toshitaro; and Oka, Tateki, 4,301,228, Cl. 430-122.000.
Oka, Toshiichiro: *See—*
Sawaguchi, Masahiro; Sasaki, Masami; Hosoya, Hiroshi; and Oka, Toshiichiro, 4,301,484, Cl. 360-96.600.
Okada, Masanori: *See—*
Suzuki, Yuichi; Okada, Masanori; and Henmi, Zenzo, 4,300,958, Cl. 148-120.000.
Okada, Yasuyuki: *See—*
Eifuku, Yoshiaki; Mimura, Kazunobu; and Okada, Yasuyuki, 4,301,514, Cl. 364-900.000.
Okano, Hiroshi; and Hirano, Masayoshi, to Toyota Jidosha Kogyo Kabushiki Kaisha. Measurement of the unbalance of a rotor body of small weight. 4,300,387, Cl. 73-460.000.
Okazaki, Hiroshi: *See—*
Oi, Nobuhiro; Aoki, Bunya; Shinozaki, Teizo; Moro, Kanji; Matsunaga, Isao; Noto, Takao; Nebashi, Toshiyuki; Harada, Yusuke; Endo, Hisao; Kimura, Takao; Okazaki, Hiroshi; Ogawa, Haruki; and Shindo, Minoru, 4,301,161, Cl. 424-246.000.
Okumura, Takeshi: *See—*
Nakanishi, Kiyoshi; Okumura, Takeshi; Deguchi, Ryuichi; and Tanahashi, Toshio, 4,300,499, Cl. 123-307.000.
Okuyama, Shigeaki: *See—*
Katayama, Yoshiyuki; Hasegawa, Shigekazu; Okuyama, Shigeaki; and Nakamura, Norimi, 4,300,638, Cl. 172-10.000.
Olcott, Tyler K., to W. R. Grace & Co., Cryovac Division. Horizontal blow molding. 4,301,111, Cl. 264-515.000.
Oliver, Floyd F.: *See—*
Koepp, Ronald L.; Oliver, Floyd F.; and Barnett, James V., 4,301,524, Cl. 368-261.000.
Olsen, Thomas O., to Otto Fabric, Inc. Method and apparatus for collecting solar energy. 4,300,532, Cl. 126-417.000.
Olympus Optical Co., Ltd.: *See—*
Furihata, Hiroyuki, 4,300,564, Cl. 128-321.000.
Ichikawa, Hiroki, 4,300,735, Cl. 242-201.000.
Ida, Hideaki; and Fujiwara, Toshihide, 4,301,116, Cl. 422-65.000.
Nakahashi, Ken-ichi, 4,300,812, Cl. 350-42.000.
Sato, Masaaki, 4,300,713, Cl. 226-190.000.
Omote, Shigeo: *See—*
Kageyama, Kunio; Omote, Shigeo; Taguchi, Youichi; and Yamazaki, Hazime, 4,300,614, Cl. 152-347.000.
Omron Tateisi Electronics Co.: *See—*
Sakakino, Takahiro; and Iwakiri, Norio, 4,301,344, Cl. 200-314.000.
Oneida General Corporation: *See—*
Rich, Brett, 4,300,721, Cl. 238-2.000.
O'Neill, George J.; and Rothwell, Allan R., to Eastman Kodak Company. Hair grooming method using linear polyesters. 4,300,580, Cl. 132-7.000.
Ono, Hiroshi: *See—*
Inoue, Shigeru; and Ono, Hiroshi, 4,301,299, Cl. 564-67.000.
Oono, Shigeru: *See—*
Nakamura, Kotaro; Suzuki, Yoshiaki; Hara, Hiroshi; Sawada, Satoru; and Oono, Shigeru, 4,301,223, Cl. 430-17.000.
Oppermann, Heinz: *See—*
Berger, Bernd; Mucke, Gert; Thies, Helmut; Neuschutz, Eberhard; and Oppermann, Heinz, 4,300,403, Cl. 73-862.070.
Oregon Graduate Center for Study and Research: *See—*
Holmes, Jones F.; and Jacob, Ralph L., 4,300,836, Cl. 356-376.000.
Orlandi, John F.; and Moore, Timothy J., to Belden Corporation. System for stranding and cabling elongate filaments. 4,300,339, Cl. 57-58.340.
Ornati, Ernesto. Leg structure for table, chair or the like. 4,300,455, Cl. 108-156.000.
O'Rourke, Thomas J.: *See—*
Sprecker, Mark A.; Sanders, James M.; Schreiber, William L.; Watkins, Hugh; Vinals, Joaquin F.; Shuster, Edward J.; O'-Rourke, Thomas J.; Hagedorn, Myrna L.; and Klemarczyk, Philip, 4,301,302, Cl. 568-373.000.
Osadin, Vladimir A.: *See—*
Astansky, Jury L.; Romanov, Vladimir A.; and Osadin, Vladimir A., 4,300,517, Cl. 123-575.000.
Osaka University, The President of: *See—*
Matsuo, Takekiyo; Katakuse, Itsuo; and Matsuda, Hisashi, 4,301,369, Cl. 250-423.00R.
Osmundson, Eric C.: *See—*
McWhorter, Thomas E.; Kekuna, Haunani; Gabel, Brian L.; and Osmundson, Eric C., 4,300,355, Cl. 62-48.000.
Otis Elevator Company: *See—*
Hmelovsky, Michael W., 4,300,661, Cl. 187-29.00R.
Hmelovsky, Michael W., 4,300,662, Cl. 187-29.00R.
Hmelovsky, Michael W.; and Games, John E., 4,300,663, Cl. 187-29.00R.
Schoenmann, Charles F.; and Deric, J. Mark, 4,300,660, Cl. 187-29.00R.
Otis, Richard G.: *See—*
Byrne, Allan B.; Otis, Richard G.; and Robinson, Stephen A., 4,300,737, Cl. 244-158.00R.
Otsuki, Keizo; Mochizuki, Hidetoshi; Suzuki, Akira; Adachi, Yoshio; Kosaka, Hideki; and Murakami, Gen, to Hitachi, Ltd. Lead frame and semiconductor device employing the same with improved arrangement of supporting leads for securing the semiconductor supporting member. 4,301,464, Cl. 357-70.000.
Otto Fabric, Inc.: *See—*
Olsen, Thomas O., 4,300,532, Cl. 126-417.000.
Outboard Marine Corporation: *See—*
Heismann, Richard A., 4,300,295, Cl. 37-43.00D.

Hines, Charles E., 4,300,334, Cl. 56-17.400.
Owens-Corning Fiberglas Corporation: *See—*
Andre, Gerald R.; Wingate, David C.; and Matteson, Thomas O., 4,300,728, Cl. 242-18.00A.
Carruth, Grant F.; Pellegrin, Michael T.; Felch, Russell R.; and Atkinson, Donald R., 4,300,929, Cl. 65-2.000.
Green, William A.; and Parsons, William B., 4,300,734, Cl. 242-170.000.
Kane, John L.; and Nadkarni, Vikas M., 4,300,876, Cl. 425-66.000.
Marzocchi, Alfred; Roberts, Michael G.; Bolen, Charles E.; and Harrington, Edward R., 4,301,051, Cl. 260-28.5AS.
Meechan, Robert M.; and Gallina, Gabriel V., 4,300,323, Cl. 52-464.000.
Phillips, John D., 4,300,931, Cl. 65-4.300.
Phillips, John D.; and Schultz, William W., 4,300,932, Cl. 65-14.000.
Ozima, Masami: *See—*
Shibata, Kenji; and Ozima, Masami, 4,301,148, Cl. 424-93.000.
Paap, Hans J., to Texaco Inc. Microwave water in crude monitor. 4,301,400, Cl. 324-58.50A.
Paccar Inc.: *See—*
Coyle, Charles F., 4,300,924, Cl. 55-210.000.
Package Machinery Company: *See—*
Farrell, Robert E., 4,301,100, Cl. 264-40.500.
Packaging Corporation of America: *See—*
Champlin, Charles L., 4,300,680, Cl. 206-427.000.
Packham, Charles C.: *See—*
Majthan, Rudolf; Stuhler, Rolf; Parsonage, Raymond G.; and Packham, Charles C., 4,300,280, Cl. 29-611.000.
Paddison, Eric, deceased (by Paddison, Ethel, administratrix); Fordham, Roger G.; and Thomas, Alan J., to General Electric Company Limited, The. Electrical measuring apparatus employing magnetoelectric devices. 4,301,408, Cl. 324-141.000.
Paddison, Ethel, administratrix: *See—*
Paddison, Eric, deceased; Fordham, Roger G.; and Thomas, Alan J., 4,301,408, Cl. 324-141.000.
Pagany, Volker, to Texas Instruments Deutschland. Alignment apparatus. 4,301,470, Cl. 358-101.000.
Page, Cornelius D., Jr., to Allied Plastics, Inc. Automobile console. 4,300,709, Cl. 224-275.000.
Pako Corporation: *See—*
Kaufmann, Kenneth M., 4,300,828, Cl. 354-322.000.
Pala, Gianfranco; and Cereda, Enzo, to Istituto de Angeli S.p.A. (3-Methyl-2-butenyl)propanedioic acid mono (1,2-diphenylhydrazide) and salts thereof. 4,301,177, Cl. 424-319.000.
Palla, Ottorino; Galli, Remo; Gozzo, Franco; and Lorusso, Simone, to Montedison S.p.A. Fungicidal N-acyl-S-haloalkyl (or S-halovinyl) thiolcarbamates and process for preparing same. 4,301,174, Cl. 424-300.000.
Palleroni, Norberto J.: *See—*
Despreaux, Carl; Narwid, Thomas A.; Palleroni, Norberto J.; and Uskokovic, Milan R., 4,301,246, Cl. 435-58.000.
Palmer, John P., to General Dynamics Corporation, Pomona Division. Fiber optic transceiver and full duplex point-to-point data link. 4,301,543, Cl. 455-612.000.
Panametrics, Inc.: *See—*
Pedersen, Norman E., 4,300,401, Cl. 73-861.310.
Panaro, Robert J., to Gould Inc. Method of making electric fuse having folded fusible element and heat dams. 4,300,281, Cl. 29-623.000.
Panchula, George. Coring machine for frankfurters and the like. 4,300,286, Cl. 30-113.300.
Pandrol Limited: *See—*
Checkley, Peter E., 4,300,380, Cl. 72-306.000.
Panin, Vladimir I.: *See—*
Basin, Leonid A.; Valkov, Alexei A.; Panin, Vladimir I.; and Terekhin, Vladimir I., 4,301,365, Cl. 250-308.000.
Pannwitz, Karl-Heinz, to Dragerwerk Aktiengesellschaft. Test vial construction and method of measuring gas, vapor and aerosol components in an air sample. 4,300,910, Cl. 23-232.00R.
Paparizos, Christos: *See—*
Shaw, Wilfrid G.; Rinz, James E.; and Paparizos, Christos, 4,301,030, Cl. 252-435.000.
Shaw, Wilfrid G.; Kuch, Philip L.; and Paparizos, Christos, 4,301,031, Cl. 252-435.000.
Papst, Hermann. Method of manufacturing connecting rod for axial cylinder-type reciprocating piston engine. 4,300,274, Cl. 29-156.50A.
Paquin, Maurice J.; and Radleigh, James J. Pressure-sensing transducer. 4,301,492, Cl. 361-283.000.
Parker, Duane A., to Surgikos. Operating room face mask. 4,300,549, Cl. 128-206.190.
Parker-Hannifin Corporation: *See—*
Jelinek, Jerry G., 4,300,773, Cl. 277-11.000.
Parmatic Filter Corporation: *See—*
Cary, Boyd, 4,300,918, Cl. 55-1.000.
Parry, John, to South Wales Switchgear Limited. Electrical switchgear. 4,301,340, Cl. 200-147.00R.
Parry, John, to South Wales Switchgear Limited. Electrical switchgear. 4,301,341, Cl. 200-147.00R.
Parsonage, Raymond G.: *See—*
Majthan, Rudolf; Stuhler, Rolf; Parsonage, Raymond G.; and Packham, Charles C., 4,300,280, Cl. 29-611.000.
Parsons, Derek A.; and Clarke, James W., to Coal Industry (Patents) Limited. Filtration. 4,301,015, Cl. 210-777.000.
Parsons, William B.: *See—*
Green, William A.; and Parsons, William B., 4,300,734, Cl. 242-170.000.
Partain, Joe C. Tool suspension system. 4,300,863, Cl. 409-109.000.

Pascal, Jacques: *See—*
Thuries, Edmond; Delcoustal, Jean-Marie; and Pascal, Jacques, 4,300,586, Cl. 137-110.000.
Paschakarnis, Peter: *See—*
Seltenheim, Volker; Schubert, August; Paschakarnis, Peter; Vonderau, Josef; Ilzig, Frank; Frosch, Walter; and Fuglein, Egon, 4,301,205, Cl. 428-127.000.
Pasdera, Leonard A.: *See—*
Lemoine, Maurice G.; and Pasdera, Leonard A., 4,301,466, Cl. 358-13.000.
Pasternack, Adalbert, to Dragerwerk Aktiengesellschaft. Respirator having means for cooling inhalation air. 4,300,547, Cl. 128-202.260.
Pate, Harold T.: *See—*
Wozniak, Glenn A.; Rady, Robert R.; and Pate, Harold T., 4,300,425, Cl. 83-468.000.
Pattermann, Norbert C. Drywall taper's tool carrier and combinations therewith. 4,300,708, Cl. 224-253.000.
Patzke, Jorg; and Wegehaupt, Karl-Heinrich, to Wacker-Chemie GmbH. Organopolysiloxane elastomers. 4,301,056, Cl. 260-37.0SB.
Patzold, Walter; and Czernik, Karl, to Agfa-Gevaert Aktiengesellschaft. Emulsion mixture for color reversal (reflection viewing) material. 4,301,242, Cl. 430-569.000.
Paul, James L.: *See—*
Horlenko, Theodore; Paul, James L.; and Gordon, James W., 4,301,298, Cl. 560-218.000.
Pawelczyk, Adam: *See—*
Schroeder, Jeizy; Lewandowski, Mieczyslaw; Kuzko, Antoni; Gorecki, Henryk; Zielinski, Krzysztof; Pozniak, Tadeusz; Zieba, Stefan; Gorecka, Helena; Pawelczyk, Adam; and Wysocki, Andizej, 4,301,130, Cl. 423-320.000.
Peachtree Doors, Inc.: *See—*
Dunsmoor, Forrest L., 4,300,794, Cl. 292-247.000.
Pedersen, Norman E., to Panametrics, Inc. Method and apparatus for determining fluid flow. 4,300,401, Cl. 73-861.310.
Peek, Hermanus L., to U.S. Philips Corporation. Method of providing a conductor layer pattern having parts which are present at a small separation in the manufacture of semiconductor devices. 4,301,191, Cl. 427-88.000.
Pellegrin, Michael T.: *See—*
Carruth, Grant F.; Pellegrin, Michael T.; Felch, Russell R.; and Atkinson, Donald R., 4,300,929, Cl. 65-2.000.
Perahia, Avraham, to Pertec Computer Corporation. Servo preamplifier and demodulator chain using transconductance balanced modulators. 4,301,416, Cl. 328-71.000.
Permacel: *See—*
Korpman, Ralf, 4,301,255, Cl. 525-92.000.
Perraud, Raymond, to Societe d'Etude et de Construction de Machines pour toutes Industries S.E.C.O.M.A. Device for reaming and collecting dust, for a drilling apparatus. 4,300,642, Cl. 175-173.000.
Perrin, Marc, to Cycles Peugeot. Pipe closing device. 4,300,489, Cl. 123-73.0AD.
Perry Oceanographics, Inc.: *See—*
Miller, Harvey A.; Newman, Jon P.; and Yemington, Charles R., 4,301,399, Cl. 324-34.000.
Pertec Computer Corporation: *See—*
Perahia, Avraham, 4,301,416, Cl. 328-71.000.
Pertron Controls Corporation: *See—*
Mathews, James K., 4,301,351, Cl. 219-114.000.
Pesa, Frederick A.; and Graham, Anne M., to Standard Oil Company. Process for the manufacture of 1-4-butanediol and tetrahydrofuran. 4,301,077, Cl. 260-346.110.
Pesa, Frederick A.; and Haase, Thomas A., to Standard Oil Company. Process for the hydroformylation of olefinically unsaturated compounds. 4,301,089, Cl. 260-465.100.
Pesa, Frederick A.; and Haase, Thomas A., to Standard Oil Company. Carbonylation of olefinically unsaturated compounds. 4,301,090, Cl. 260-465.400.
Peter, Emmett B., III, to Burroughs Corporation. Reverser mechanism for duplex printing/paper handling apparatus for cut sheet printing. 4,300,758, Cl. 271-225.000.
Peters, Louis: *See—*
Rosenberger, Gregory J.; and Peters, Louis, 4,300,956, Cl. 148-6.300.
Peterson, Francis C., to Illinois Tool Works Inc. Device for hanging a drapery rod bracket on wallboard. 4,300,745, Cl. 248-546.000.
Petit, Jean-Pierre. Digital transmission system with a double analog integrator Delta Sigma coder and a double digital integrator Delta Sigma decoder. 4,301,446, Cl. 340-347.0AD.
Petrie, Adelore F., to Motorola, Inc. Digital dwell circuit. 4,300,518, Cl. 123-609.000.
Pfaff, Hansen: *See—*
Fischer, Berthold; Kabelitz, Hans-Peter; Pfaff, Hansen; and Schmitz, Andreas, 4,300,875, Cl. 418-55.000.
Pfaffli, Paul; and Hauth, Hartmut, to Sandoz Ltd. Organic compounds. 4,301,290, Cl. 546-143.000.
Pfanstiehl, John G. Precut framing. 4,301,199, Cl. 428-14.000.
Pfeifer, William: *See—*
Marshall, Winston S.; and Pfeifer, William, 4,301,313, Cl. 570-128.000.
Pfeiffer, Ronald E.: *See—*
Kreahling, Robert P.; and Pfeiffer, Ronald E., 4,301,107, Cl. 264-206.000.
Pforr, Gerhard: *See—*
Duembgen, Gerd; Voelkl, Erfried; and Pforr, Gerhard, 4,301,126, Cl. 423-240.000.

Pfrimmer & Co., Pharmazeutische Werke Erlangen GmbH: *See—*
Baumgartner, Ludwig, 4,300,243, Cl. 3-1.000.
Phelpstead, James W. P.: *See—*
Horsewell, Henry G.; and Phelpstead, James W. P., 4,300,577, Cl. 131-334.000.
Phillips, Frederick W., II; and Priepke, Edward H., to Sperry Corporation. Harvester spout control device. 4,300,726, Cl. 241-101.700.
Phillips, John D., to Owens-Corning Fiberglas Corporation. Method and apparatus for collecting fibrous material. 4,300,931, Cl. 65-4.300.
Phillips, John D.; and Schultz, William W., to Owens-Corning Fiberglas Corporation. Apparatus for forming mineral fibers. 4,300,932, Cl. 65-14.000.
Phillips Petroleum Company: *See—*
Campbell, Robert W., 4,301,274, Cl. 528-388.000.
Clampitt, Richard L., 4,300,634, Cl. 166-272.000.
Glinsmann, Gilbert R., 4,300,635, Cl. 166-274.000.
Haskell, Donald M.; and Farha, Floyd, Jr., 4,301,315, Cl. 585-304.000.
McDaniel, Max P., 4,301,034, Cl. 252-452.000.
Roof, Lewis B.; and Benningfield, L. V., Jr., 4,301,401, Cl. 324-61.00R.
Wiley, Bruce F., 4,300,394, Cl. 73-597.000.
Pick, Anthony J.: *See—*
Feingers, Judith; Pick, Anthony J.; and Wagner, Daniel B., 4,301,139, Cl. 424-1.000.
Pieniak, Heinz A., to Johnson & Johnson Baby Products Company. Laminated structures having gathered marginal portions. 4,300,562, Cl. 128-287.000.
Pierrat, Michel A. Log splitter with protection against twisting moments. 4,300,605, Cl. 144-193.00A.
Piggin, Bruce P.: *See—*
Beck, Vernon D.; Piggin, Bruce P.; and Uber, Arthur E., III, 4,301,389, Cl. 313-411.000.
Pinne, Donald N., Jr.: *See—*
Redzinski, Gilbert E.; Pinne, Donald N., Jr.; and Den Bleyker, Joseph R., 4,300,652, Cl. 180-336.000.
Pintsch Bamag Antriebs-und Verkehrstechnik GmbH: *See—*
Nissel, Jurgen, 4,300,772, Cl. 277-3.000.
Pioneer Electronic Corporation: *See—*
Morii, Takashi; and Kurata, Junichi, 4,301,526, Cl. 369-33.000.
Sato, Reisuke; and Ogawa, Tadashi, 4,301,540, Cl. 455-180.000.
Pioth, Michael J. Stretcher. 4,300,782, Cl. 280-47.110.
Pitney Bowes Inc.: *See—*
Soderberg, John H.; Eckert, Alton B.; and McFiggans, Robert B., 4,301,507, Cl. 364-464.000.
Plastilite Corporation: *See—*
Maycock, E. Frank; and Rayer, John L., 4,300,304, Cl. 43-44.870.
Plesu, Jean-Marie: *See—*
Bach, Jean-Francois; Dardenne, Mireille; Pleau, Jean-Marie; Hamburger, Jean; Bricas, Evanghelos; Martinez, Jean; Blanot, Didier; and Auger, Genevieve, 4,301,065, Cl. 260-112.50R.
Plempel, Manfred: *See—*
Regel, Erik; Buchel, Karl H.; Haller, Ingo; and Plempel, Manfred, 4,301,166, Cl. 424-269.000.
Plessey Handel und Investments AG: *See—*
Silvey, Trevor I., 4,300,466, Cl. 114-244.000.
Plichta, George J.; and Unger, Thomas E., to Western Electric Co., Inc. Method for coating thru holes in a printed circuit substrate. 4,301,192, Cl. 427-97.000.
Plumbium Manufacturing Corporation: *See—*
Chorosevic, Jerome J., 4,300,803, Cl. 301-5.00B.
Plunkett, Luther C., Jr.: *See—*
Mohammadioun, Said; Wittler, David A.; Titus, Theodore, IV; and Plunkett, Luther C., Jr., 4,301,525, Cl. 369-29.000.
PMC Industries, Inc.: *See—*
Urbanic, Robert F., 4,300,780, Cl. 279-1.00L.
PNC Company: *See—*
Keuchel, Herbert W., 4,301,203, Cl. 428-105.000.
Pneumatic Scale Corporation: *See—*
Jennings, Frederick R., 4,300,716, Cl. 229-37.00R.
Podboronov, Boris P.: *See—*
Galkin, Mikhail M.; Kornienko, Marat I.; Podboronov, Boris P.; Sokolov, Sergei S.; and Furman, Anatoly V., 4,301,402, Cl. 324-62.000.
Polaroid Corporation: *See—*
Baker, Philip G.; and Matthews, Gerald L., 4,300,827, Cl. 354-293.000.
Powers, Sheldon D., 4,300,822, Cl. 352-130.000.
Politechnika Wroclawska: *See—*
Schroeder, Jeizy; Lewandowski, Mieczyslaw; Kuzko, Antoni; Gorecki, Henryk; Zielinski, Krzysztof; Pozniak, Tadeusz; Zieba, Stefan; Gorecka, Helena; Pawelczyk, Adam; and Wysocki, Andizej, 4,301,130, Cl. 423-320.000.
Pollman, Gary A., to PPG Industries, Inc. Sizing composition and sized strand useful as reinforcement for reinforced molded composites having improved physical properties. 4,301,052, Cl. 260-29.2TN.
Pommer, Ernst-Heinrich: *See—*
Buschmann, Ernst; Zeeh, Bernd; Pommer, Ernst-Heinrich; and Goetz, Norbert, 4,301,284, Cl. 544-106.000.
Hagen, Helmut; Pommer, Ernst-Heinrich; Reuther, Wolfgang; and Ziegler, Hans, 4,301,157, Cl. 424-218.000.
Ponomarev, Leonid F.: *See—*
Mitin, Leonid A.; Fadeev, Petr Y.; Ponomarev, Leonid F.; Fadeev, Vladimir Y.; Rybert, Vyacheslav F.; Reutsky, Jury V.; Kulagin, Rim A.; Vorozheikin, Anatoly A.; Ermilov, Nikolai P.; Dimova, Lidia P.; Doskaziev, Adil G.; Korobkov, Vladlen V.; Babenko,

Sergei A.; Akhmatov, Mikhail M.; Zhaksybaev, Nabi K., deceased; and Zhaksybaeva, Ekaterina S., executrix, 4,300,802, Cl. 299-64.000.
Ponpipom, Mitree M., to Merck & Co., Inc. Immunologic adjuvant. 4,301,152, Cl. 424-182.000.
Pont-a-Mousson S.A.: *See—*
Langenfeld, Michel; and Lagabe, Andre, 4,301,200, Cl. 428-33.000.
Royer, Alain L. A.; Roques, Jean-Claude B.; and Dumas, Bernard J. L., 4,300,598, Cl. 138-177.000.
Popper, Robert H., Jr. Apparatus for enabling movement of a binder between stored and readable positions relative to a support. 4,300,744, Cl. 248-447.000.
Porter, Steven A.: *See—*
Valka, William A.; and Porter, Steven A., 4,300,750, Cl. 251-323.000.
Potter, Jerry F., to Du Pont de Nemours, E. I., and Company. Apparatus for cutting filamentary material. 4,300,422, Cl. 83-99.000.
Potton, Malcolm J.: *See—*
de la Haye, Robert; Matthews, John A; Potton, Malcolm J.; and Cook, Steven P., 4,300,850, Cl. 403-245.000.
Potvin, Alfred M. Miter box construction with clamp means. 4,300,755, Cl. 269-87.200.
Poubeau, Pierre, to Societe Nationale Industrielle Aerospatiale. Method and device for balancing rotary bodies with passive radial and active axial magnetic suspension and for orienting their axis of rotation. 4,300,807, Cl. 308-10.000.
Power, Joseph S.: *See—*
Keith, Everette R.; Cook, Kenneth J.; Power, Joseph S.; and Ruszala, Frederick B., 4,301,512, Cl. 364-801.000.
Powers, Sheldon D., to Polaroid Corporation. Multipurpose film cassette having balanced force process mode switch. 4,300,822, Cl. 352-130.000.
Poynter, Donald B., to Poynter Products, Inc. Device for moistening the adhesive coating on postage stamps and envelopes. 4,300,473, Cl. 118-263.000.
Poynter Products, Inc.: *See—*
Poynter, Donald B., 4,300,473, Cl. 118-263.000.
Pozniak, Tadeusz: *See—*
Schroeder, Jeizy; Lewandowski, Mieczyslaw; Kuzko, Antoni; Gorecki, Henryk; Zielinski, Krzysztof; Pozniak, Tadeusz; Zieba, Stefan; Gorecka, Helena; Pawelczyk, Adam; and Wysocki, Andizej, 4,301,130, Cl. 423-320.000.
Pozzo, Hans, to Schubert & Salzer. Housing for holding a thread monitor comprising a thread tension sensor. 4,300,340, Cl. 57-80.000.
Pozzo, Hans, to Schubert & Salzer. Housing for holding a control device with heat-generating elements for a thread monitor of an open-end spinning station. 4,300,341, Cl. 57-80.000.
PPG Industries, Inc.: *See—*
DeTorre, Robert P., 4,300,934, Cl. 65-60.100.
Franz, Helmut; Hanlon, James H.; and Shick, Lloyd G., 4,301,197, Cl. 427-353.000.
May, Earl L., 4,300,938, Cl. 65-182.400.
Pollman, Gary A., 4,301,052, Cl. 260-29.2TN.
Rideout, Walker H.; and Jeselnik, Mary E., 4,301,314, Cl. 570-253.000.
Seymour, Samuel L., 4,300,935, Cl. 65-107.000.
Thomas, Donald D., 4,300,933, Cl. 65-60.100.
Prasthofer, Willibald P., to United States of America, National Aeronautics and Space Administration. Controlled overspray spray nozzle. 4,300,723, Cl. 239-499.000.
Precision Metalsmiths, Inc.: *See—*
Bauer, Timothy R., 4,300,617, Cl. 164-244.000.
Prefectural Economic Federation of Agricultural Co-operatives: *See—*
Hayashi, Masayuki; Ifuku, Yasushi; Uchiyama, Hirofumi; Kaga, Yosimi; and Nakamori, Akifuml, 4,300,448, Cl. 99-516.000.
Preininger, Gustav, to Elin-Union Aktiengesellschaft. Impedance coil core. 4,301,437, Cl. 336-60.000.
Preis, Lothar; and Jehle, Dieter, to Bayer Aktiengesellschaft. Composite fibre material articles with inlays and a method of producing them. 4,300,321, Cl. 52-223.00R.
Preobrazhensky, Pavel S.: *See—*
Nikandrov, Gennady A.; Alovyainikov, Alexandr A.; Varlamova, Ljudmila V.; Vulikh, Alexandr I.; Lopatin, Jury P.; Tikhomirov, Vladimir A.; Chebukhanova, Vera A.; Preobrazhensky, Pavel S.; Spiridonov, Viktor E.; Zhelonkin, Alexandr G.; and Varlamov, Rudolf P., 4,300,925, Cl. 55-242.000.
Price, Paul. Apparatus for severing and separating cup-shaped object supports. 4,300,423, Cl. 83-165.000.
Price, Robert A. Atmosphere exclusion hood means for internal combustion motors of portable rescue tools and related equipment and the like. 4,300,496, Cl. 123-198.00E.
Priebs, Horst, to HAT-Hohmann GmbH & Co. Automations-Technik, Kommanditgesellschaft. Device for folding materials to be folded. 4,300,896, Cl. 493-419.000.
Priepke, Edward H.: *See—*
Phillips, Frederick W., II; and Priepke, Edward H., 4,300,726, Cl. 241-101.700.
Prior, John C. Building component and method of making the same. 4,301,198, Cl. 428-2.000.
Prior, Maurice J., to Mobil Oil Corporation. Release mechanism for underwater device, such as seismograph. 4,300,254, Cl. 9-8.00R.
Procter & Gamble Company, The: *See—*
Carstens, Jerry E., 4,300,981, Cl. 162-109.000.
Wentler, George E.; McGrady, Joseph; Gosselink, Eugene P.; and Cilley, William A., 4,301,044, Cl. 252-545.000.
Proctor, Harry P.: *See—*
Maeder, Edward G.; and Proctor, Harry P., 4,300,375, Cl. 72-45.000.
Product Enterprise, Inc.: *See—*
Mettler, Leo L.; and Johnson, Arthur L., 4,301,095, Cl. 261-30.000.
Produits Chimiques Ugine Kuhlmann: *See—*
Koeppel, Robert, 4,300,324, Cl. 52-612.000.
Properzi, Giulio. Fixable width casting wheel. 4,300,618, Cl. 164-433.000.
Prosser, Leonard J., Jr.: *See—*
Sainato, Albert; Cervik, Joseph; and Prosser, Leonard J., Jr., 4,300,631, Cl. 166-187.000.
Provost, Fellows and Scholars of the College of the Holy and Undivided Trinity of Queen Elizabeth, The: *See—*
Wardell, Gerald E.; and McBrierty, Vincent J., 4,301,411, Cl. 324-307.000.
Pruett, Roy L.; and Bradley, John S., to Exxon Research & Engineering Co. Bimetallic clusters of ruthenium with copper, silver and gold. 4,301,086, Cl. 260-438.100.
Ptaszek, George W.: *See—*
Biasuzzi, Patricia A.; and Ptaszek, George W., 4,300,307, Cl. 46-154.000.
Puckett, Donald M., to Purolator Technologies, Inc. Welded stainless steel mesh cleanable filter. 4,301,012, Cl. 210-457.000.
Puglia, Wayne J.: *See—*
Witzel, Frank; Puglia, Wayne J.; Clark, K. Warren; and Mackay, Donald A. M., 4,301,178, Cl. 426-5.000.
Purdue University: *See—*
Whistler, Roy L., 4,301,276, Cl. 536-4.000.
Purex Corporation: *See—*
Borja, Arthur; and Van Otterdyk, Frans, 4,301,194, Cl. 427-154.000.
Purification Sciences Inc.: *See—*
Lowther, Frank E., 4,300,486, Cl. 123-39.000.
Purolator Technologies, Inc.: *See—*
Puckett, Donald M., 4,301,012, Cl. 210-457.000.
Puschel, Walter; Odenwalder, Heinrich; and Ranz, Erwin, to AGFA-Gevaert Aktiengesellschaft. Photographic recording material. 4,301,243, Cl. 430-613.000.
Putzar, Roland; and Fierz, Hans, to Ciba-Geigy Corporation. Process and dye preparations for pad-dyeing. 4,300,900, Cl. 8-524.000.
Puyhaubert, Jean; and Jacquemin, Claude, to Thomson-CSF. Miniature delay line having low direct coupling. 4,301,431, Cl. 333-141.000.
Quaker Oats Company, The: *See—*
Fisher, Robert C., 4,300,783, Cl. 280-87.02R.
Irvin, Ronald D., 4,301,529, Cl. 369-267.000.
Queen's University at Kingston: *See—*
Saunders, Gerald A., 4,300,245, Cl. 3-18.000.
Quillevere, Jean C.; and Segall, Jean, to BFG Glassgroup. Process of cooling glass in a fluidized bed. 4,300,936, Cl. 65-114.000.
Quine, John P., to General Electric Company. Feed system for microwave oven. 4,301,347, Cl. 219-10.55F.
Qwint Systems, Inc.: *See—*
Hoffman, Robert C.; Kruse, Richard H.; and Martin, Donald P., 4,300,847, Cl. 400-196.100.
Martin, Donald P.; Hoffman, Robert C.; and Kruse, Richard H., 4,300,845, Cl. 400-124.000.
R. A. Pearson Company: *See—*
Campbell, Barry, 4,300,325, Cl. 53-143.000.
R. G. Barry Corporation: *See—*
Laganas, Arthur, 4,300,256, Cl. 12-142.00F.
Rada, Petr: *See—*
Lamb, Frank H.; Lefcort, Malcolm D.; and Rada, Petr, 4,300,460, Cl. 110-346.000.
Rader, Philip C.: *See—*
Goodstine, Stephen L.; and Rader, Philip C., 4,301,127, Cl. 423-242.000.
Radiation Dynamics, Inc.: *See—*
Berejka, Anthony J.; and Bradley, Richard, 4,300,988, Cl. 204-159.200.
Radisic, Branko: *See—*
Halilovic, Esref; and Radisic, Branko, 4,300,843, Cl. 366-125.000.
Radleigh, James J.: *See—*
Paquin, Maurice J.; and Radleigh, James J., 4,301,492, Cl. 361-283.000.
Rady, Robert R.: *See—*
Wozniak, Glenn A.; Rady, Robert R.; and Pate, Harold T., 4,300,425, Cl. 83-468.000.
Raetz, Karlheinz. Sunlight collector. 4,300,531, Cl. 126-417.000.
Ragaly, Istvan, to Robert Bosch GmbH. Internal combustion engine and D-C floating battery self-contained electrical network combination, particularly for the on-board network of automotive vehicles. 4,301,376, Cl. 290-36.00R.
Raghupathi, Narasimhan; and Kure, Edward A., to Ford Motor Company. Tension-compression member. 4,300,410, Cl. 74-579.00R.
Rahdener Maschinenfabrik August Kolbus GmbH & Co. KG: *See—*
Rathert, Horst, 4,300,427, Cl. 83-519.000.
Rairden, John R.: *See—*
Habesch, Emil M., Jr.; and Rairden, John R., 4,300,947, Cl. 75-0.50R.
Ralston Purina Company: *See—*
Simon, Frank J.; Reinke, William C.; Soo, Hong-Ming; Lanning, Christie L.; and Richert, Stanley H., 4,301,180, Cl. 426-250.000.
Simon, Frank J.; Reinke, William C.; Soo, Hong-Ming; Kienstra, Mary; and Richert, Stanley H., 4,301,181, Cl. 426-250.000.

Simon, Frank J.; Reinke, William C.; and Richert, Stanley H., 4,301,182, Cl. 426-250.000.
Ranisch, Reinhard, to Konig, Friedrich W. Tape cassette. 4,301,488, Cl. 360-132.000.
Rankin, John W. Method and apparatus for fractionation and recovery of limestone grits in kraft pulping process. 4,301,000, Cl. 209-17.000.
Ranz, Erwin: *See—*
Puschel, Walter; Odenwalder, Heinrich; and Ranz, Erwin, 4,301,243, Cl. 430-613.000.
Rapkin, Myron C.; and Tabb, David L., to Miles Laboratories, Inc. Test device resistant to cross contamination between reactant areas and process for making it. 4,301,115, Cl. 422-56.000.
Rapp, Eugen: *See—*
Grullmeier, Artur, 4,300,351, Cl. 60-560.000.
Rasberger, Michael, to Ciba-Geigy Corporation. Dibenzodioxaphosphepines and stabilized polymers. 4,301,061, Cl. 260-45.80N.
Rasmussen GmbH: *See—*
Sauer, Heinz, 4,300,270, Cl. 24-274.00R.
Rath, Heinz-Jorg: *See—*
Schmidt, Dietrich; Meissner, Bruno; Rath, Heinz-Jorg; Regler, Dieter; and Voss, Jurgen, 4,300,965, Cl. 156-154.000.
Rathert, Horst, to Rahdener Maschinenfabrik August Kolbus GmbH & Co. KG. Three-knife trimmer. 4,300,427, Cl. 83-519.000.
Ratner, Phillip: *See—*
Kullen, Allan S.; and Ratner, Phillip, 4,301,232, Cl. 430-300.000.
Raue, Roderich: *See—*
Schieder, Rudolf; Telle, Helmut; Raue, Roderich; and Brinkwerth, Wolfgang, 4,301,091, Cl. 260-505.00R.
Ray, Dennis A. Carburetor attachment. 4,300,513, Cl. 123-545.000.
Raychem Corporation: *See—*
Carlsen, John S., 4,300,328, Cl. 53-492.000.
Reeder, Larry R., 4,300,284, Cl. 29-860.000.
Rayer, John L.: *See—*
Maycock, E. Frank; and Rayer, John L., 4,300,304, Cl. 43-44.870.
Raymond, Samuel O.; and Hayward, Gary G., to Benthos, Inc. Undersea implosion device. 4,300,654, Cl. 181-120.000.
Raytheon Company: *See—*
Goldman, Mark B.; Kintigh, Dana W.; and Chalifour, Henri R., 4,301,429, Cl. 333-22.00R.
Miles, Perry A., 4,300,736, Cl. 244-3.130.
RCA Corporation: *See—*
Dietz, Wolfgang F. W., 4,301,394, Cl. 315-408.000.
Ettenberg, Michael; and Nuese, Charles J., 4,300,811, Cl. 350-1.100.
Herman, Ralph, 4,301,495, Cl. 361-415.000.
Johns, McKinley R., 4,301,458, Cl. 343-800.000.
Stachejko, Vitaly, 4,301,430, Cl. 333-24.100.
Rebbe, Klaus; Rosicke, Berd; and Wellmann, Klaus, to Clinocon International GmbH. Sphygmomanometer. 4,300,573, Cl. 128-686.000.
Recreation Industries Company: *See—*
Montooth, George A., 4,300,252, Cl. 9-1.200.
Reddy, Junuthula N., to Bendix Corporation, The. System controlling any air/fuel ratio with stoichiometric sensor and asymmetrical integration. 4,300,507, Cl. 123-489.000.
Redzinski, Gilbert E.; Pinne, Donald N., Jr.; and Den Bleyker, Joseph R., to Clark Equipment Company. Soft shift reversing control system. 4,300,652, Cl. 180-336.000.
Reed, Thomas F.; and Ritzert, Raymond K., to General Tire & Rubber Company, The. Inflated game ball having long lasting pressure retention with decreased noise. 4,300,767, Cl. 273-61.00R.
Reeder, Larry R., to Raychem Corporation. Method and apparatus to organize and to electrically connect wires. 4,300,284, Cl. 29-860.000.
Reeves, William H.: *See—*
Buirley, William L.; Koopman, Donald E.; McQuain, David B.; and Reeves, William H., 4,301,054, Cl. 260-29.4UA.
Refojo, Miguel F.; and Liu, Hsaio S., to United States of America, Health and Human Services. Method for treating intraocular malignancies. 4,300,557, Cl. 128-260.000.
Regel, Erik; Buchel, Karl H.; Haller, Ingo; and Plempel, Manfred, to Bayer Aktiengesellschaft. Hydroxyethyl-azole compounds, their production and their medicinal use. 4,301,166, Cl. 424-269.000.
Regie Nationale des Usines Renault: *See—*
Deleris, Robert; and Lepretre, Bernard, 4,300,503, Cl. 123-425.000.
Regler, Dieter: *See—*
Schmidt, Dietrich; Meissner, Bruno; Rath, Heinz-Jorg; Regler, Dieter; and Voss, Jurgen, 4,300,965, Cl. 156-154.000.
Rehman, William R.: *See—*
Cobbs, Walter H., Jr.; and Rehman, William R., 4,301,119, Cl. 422-133.000.
Rehmann, Wolfgang: *See—*
Knapp, Heinrich; and Rehmann, Wolfgang, 4,300,506, Cl. 123-478.000.
Reichle & De Massari: *See—*
Jucker, Jules, deceased; Jucker-Raths, Hedwig A., heir; Benz-Jucker, Edith H., heir; Jucker, Erich J., heir; and Uhlemann-Jucker, Christina U., heir, 4,301,335, Cl. 179-84.00L.
Reinecke, Erich, to WABCO Fahrzeugbremsen GmbH. Dual-circuit pressure medium operated braking system load-dependingly controlled for motor vehicles. 4,300,805, Cl. 303-22.00R.
Reiners & Furst: *See—*
Heinen, Helmut, 4,300,265, Cl. 19-112.000.
Reinert, John R., to NCR Corporation. Latching Schmitt trigger circuit. 4,301,379, Cl. 307-290.000.
Reinke, William C.: *See—*
Simon, Frank J.; Reinke, William C.; Soo, Hong-Ming; Lanning, Christie L.; and Richert, Stanley H., 4,301,180, Cl. 426-250.000.
Simon, Frank J.; Reinke, William C.; Soo, Hong-Ming; Kienstra, Mary; and Richert, Stanley H., 4,301,181, Cl. 426-250.000.
Simon, Frank J.; Reinke, William C.; and Richert, Stanley H., 4,301,182, Cl. 426-250.000.
Reisch, John W.: *See—*
Rounbehler, David P.; and Reisch, John W., 4,301,114, Cl. 422-52.000.
Remcor Products Company: *See—*
Koeneman, Robert M.; and Schafer, Albert L., 4,300,359, Cl. 62-379.000.
Rempfler, Hermann: *See—*
Bohner, Beat; Rempfler, Hermann; and Schurter, Rolf, 4,300,944, Cl. 71-94.000.
Renishaw Electrical Ltd.: *See—*
McMurtry, David R., 4,301,338, Cl. 200-61.410.
Replogle Globes, Inc.: *See—*
Riemer, Wolfgang J., 4,300,887, Cl. 434-132.000.
Resnick, Martin L.: *See—*
Fahey, Robert J.; Norbedo, Robert A.; and Resnick, Martin L., 4,301,515, Cl. 364-900.000.
Retallick, William B. Method of making a metal catalyst support. 4,301,039, Cl. 252-477.00R.
Reudink, Douglas O.: *See—*
Acampora, Anthony; and Reudink, Douglas O., 4,301,533, Cl. 370-104.000.
Reuther, Wolfgang: *See—*
Hagen, Helmut; Pommer, Ernst-Heinrich; Reuther, Wolfgang; and Ziegler, Hans, 4,301,157, Cl. 424-218.000.
Reutsky, Jury V.: *See—*
Mitin, Leonid A.; Fadeev, Petr Y.; Ponomarev, Leonid F.; Fadeev, Vladimir Y.; Rybert, Vyacheslav F.; Reutsky, Jury V.; Kulagin, Rim A.; Vorozheikin, Anatoly A.; Ermilov, Nikolai P.; Dimova, Lidia P.; Doskaziev, Adil G.; Korobkov, Vladlen V.; Babenko, Sergei A.; Akhmatov, Mikhail M.; Zhaksybaev, Nabi K., deceased; and Zhaksybaeva, Ekaterina S., executrix, 4,300,802, Cl. 299-64.000.
Revici, Emanuel, to Vinoxen Company, The. Method of treating the clinical manifestations of viral diseases. 4,301,150, Cl. 424-128.000.
Rexnord, Inc.: *See—*
Littrell, Denis G., 4,300,921, Cl. 55-96.000.
Reynolds, James W., to American International Tool Co., Inc. Apparatus for introducing an additive into a drilling mud system. 4,300,724, Cl. 239-654.000.
Rhee, Jhoon G. Protective cast device. 4,300,543, Cl. 128-89.00R.
Rhone-Poulenc Industries: *See—*
Acloque, Andre; Lanet, Jean-Claude; and Correia, Yves, 4,301,092, Cl. 260-544.00Y.
Breant, Claude, 4,301,021, Cl. 252-98.000.
Jouffret, Michel, 4,301,307, Cl. 568-771.000.
Rhonehouse, Donald E., to TGS Systems, Inc. Quench devices, glass tempering furnaces, and methods of utilizing same. 4,300,937, Cl. 65-114.000.
Ricciardi, Ronald J.; Ferrara, Angelo; and Hartmann, Joseph L., to Acrison, Incorporated. Weigh feeder system. 4,301,510, Cl. 364-567.000.
Rice, Doris M.: *See—*
Cuscurida, Michael; Dominguez, Richard J. G.; and Rice, Doris M., 4,301,110, Cl. 264-328.140.
Rice, Louis F., to United States of America, Energy. Method and apparatus for gasifying with a fluidized bed gasifier having integrated pretreating facilities. 4,300,914, Cl. 48-76.000.
Rich, Brett, to Oneida General Corporation. System for collecting liquid spillage at rail facilities. 4,300,721, Cl. 238-2.000.
Richards, James F., to Tredair Industries, Inc. Processing of silicone polymers. 4,300,841, Cl. 366-98.000.
Richert, Stanley H.: *See—*
Simon, Frank J.; Reinke, William C.; Soo, Hong-Ming; Lanning, Christie L.; and Richert, Stanley H., 4,301,180, Cl. 426-250.000.
Simon, Frank J.; Reinke, William C.; Soo, Hong-Ming; Kienstra, Mary; and Richert, Stanley H., 4,301,181, Cl. 426-250.000.
Simon, Frank J.; Reinke, William C.; and Richert, Stanley H., 4,301,182, Cl. 426-250.000.
Ricketts, Thomas E., to Occidental Oil Shale, Inc. Method of rubbling a pillar. 4,300,800, Cl. 299-2.000.
Ricoh Company, Ltd.: *See—*
Isago, Kouki, 4,300,831, Cl. 355-67.000.
Isayama, Takuro; Komai, Hiromichi; Yamazaki, Hiroshi; and Sato, Tsutomu, 4,301,459, Cl. 346-140.00R.
Kozima, Akio; and Akutsu, Eiichi, 4,301,224, Cl. 430-58.000.
Rideout, Walker H.; and Jeselnik, Mary E., to PPG Industries, Inc. Vapor phase chlorination of 1,1-dichloroethane. 4,301,314, Cl. 570-253.000.
Ridgway, Stuart L. Vehicle propulsion system. 4,300,353, Cl. 60-618.000.
Riecken, George C. Article of footwear. 4,300,294, Cl. 36-97.000.
Riemer, Wolfgang J., to Replogle Globes, Inc. Method of manufacture of raised relief illuminated globe. 4,300,887, Cl. 434-132.000.
Riggs, Dennis D. Roller skate braking system. 4,300,781, Cl. 280-11.200.
Riihimaki, Esko, to Hospital Physics Oy. Ionizing radiation detector adapted for use with tomography systems. 4,301,368, Cl. 250-385.000.
Riken Corporation: *See—*
Sugiuchi, Toshiyasu; Aoyama, Susumu; and Tokisue, Hiroshi, 4,300,381, Cl. 72-327.000.
Riker Laboratories, Inc.: *See—*
Rosenberg, Robert D., 4,301,153, Cl. 424-183.000.

Ringel, Reginald K., to Caterpillar Tractor Co. Liquid-filled radial seal. 4,300,775, Cl. 277-34.300.
Ringo Manufacturing Co. Inc.: *See—*
Davet, Richard F., 4,300,674, Cl. 206-45.140.
Rinz, James E.: *See—*
Shaw, Wilfrid G.; Rinz, James E.; and Paparizos, Christos, 4,301,030, Cl. 252-435.000.
Risse, Roger P. P., to Societe Lyonnaise des Applications Catalytiques. Catalyst mass for heterogeneous catalysis. 4,301,035, Cl. 252-455.00R.
Ritter, Robert A. Back pressure regulator and non-return valve. 4,300,593, Cl. 137-512.150.
Rittersdorf, Walter: *See—*
Bleisteiner, Manfred; Rittersdorf, Walter; and Wielinger, Hans, 4,300,905, Cl. 23-230.00B.
Rittman, Alan H.: *See—*
Brown, Sheldon H.; Autery, William D.; Rittman, Alan H.; and Chapman, Nelson H., 4,301,486, Cl. 360-99.000.
Ritzert, Raymond K.: *See—*
Reed, Thomas F.; and Ritzert, Raymond K., 4,300,767, Cl. 273-61.00R.
Robbins, Robert E.: *See—*
Woodward, James C.; and Holland, Marion D., 4,300,261, Cl. 15-345.000.
Robert Bosch GmbH: *See—*
Haubner, Georg; and Wesemeyer, Jurgen, 4,301,504, Cl. 364-200.000.
Knapp, Heinrich; and Rehmann, Wolfgang, 4,300,506, Cl. 123-478.000.
Maurer, Helmut, 4,300,990, Cl. 204-195.00S.
Ragaly, Istvan, 4,301,376, Cl. 290-36.00R.
Straubel, Max; Stumpp, Gerhard; Krieger, Klaus; and Wessel, Wolf, 4,300,515, Cl. 123-568.000.
Streit, Klaus; Buxmeyer, Walter; Schulzke, Peter; and Harsch, Klaus, 4,300,508, Cl. 123-490.000.
Roberts, Michael G.: *See—*
Marzocchi, Alfred; Roberts, Michael G.; Bolen, Charles E.; and Harrington, Edward R., 4,301,051, Cl. 260-28.5AS.
Robertshaw Controls Company: *See—*
Buckshaw, Thomas M., 4,300,396, Cl. 73-728.000.
Robertson, Berthal B.; and Robertson, Michael L. Barbecue oven. 4,300,523, Cl. 126-21.00A.
Robertson, Michael L.: *See—*
Robertson, Berthal B.; and Robertson, Michael L., 4,300,523, Cl. 126-21.00A.
Robinson, Frank, to Courtaulds Limited. Knitting method. 4,300,365, Cl. 66-176.000.
Robinson, John W.: *See—*
Fritz, Gary R.; and Robinson, John W., 4,300,436, Cl. 84-345.000.
Robinson, Paul B., to General Electric Company. Communication system and method having wide dynamic range digital gain control. 4,301,445, Cl. 340-825.540.
Robinson, Roy D.: *See—*
Flinn, Robert W.; and Robinson, Roy D., 4,300,424, Cl. 83-374.000.
Robinson, Stephen A.: *See—*
Byrne, Allan B.; Otis, Richard G.; and Robinson, Stephen A., 4,300,737, Cl. 244-158.00R.
Roccaforte, Harry, to Champion International Corporation. Display card. 4,300,683, Cl. 206-485.000.
Rockwell International Corporation: *See—*
Gergis, Isoris S., 4,301,517, Cl. 365-16.000.
Stamm, Johann A.; Sarver, James C., Jr.; and Koch, Ronald N., 4,301,011, Cl. 210-447.000.
Webber, William T., 4,300,497, Cl. 123-254.000.
Rockwell-Rimoldi, S.p.A.: *See—*
Bonahumi, Pietro, 4,300,464, Cl. 112-254.000.
Rodowsky, Stanley J., Jr.; and Morgan, Donald B., to Black & Decker Inc. Air-powered vacuum cleaner floor tool. 4,300,262, Cl. 15-387.000.
Rogers, Elmer H., Jr.: *See—*
Ryan, Kenneth W.; and Rogers, Elmer H., Jr., 4,301,138, Cl. 423-495.000.
Rohmann, Michael: *See—*
Muenster, Alfred; and Rohmann, Michael, 4,301,266, Cl. 526-212.000.
Rohr Industries, Inc.: *See—*
Whitemore, Christopher E.; and Carrillo, Robert M., 4,300,978, Cl. 156-581.000.
Rohringer, Peter; and Wegmuller, Hans, to Ciba-Geigy Corporation. Method of flameproofing wood with inorganic ammonium salts and dicyandiamide/formaldehyde reaction products. 4,301,217, Cl. 428-528.000.
Roig, Claude: *See—*
Baffert, Alain; Fauconnet, Michel; Gales, Christian; and Roig, Claude, 4,301,008, Cl. 210-242.300.
Rolls-Royce Limited: *See—*
Livsey, Norman B., 4,300,474, Cl. 118-641.000.
McMurtry, David R., 4,301,338, Cl. 200-61.410.
Wilkinson, Wilfred H.; and Henshaw, Harry, 4,300,868, Cl. 415-137.000.
Romanov, Vladimir A.: *See—*
Astansky, Jury L.; Romanov, Vladimir A.; and Osadin, Vladimir A., 4,300,517, Cl. 123-575.000.
Romanski, Eric R., to Albany International Corp. Wet press felt. 4,300,982, Cl. 162-358.000.
Ronnow, Peter H.: *See—*
Wiberger, Lars I.; Ronnow, Peter H.; Tengblad, Per F.; and Hellman, Bert G. H., 4,300,632, Cl. 166-246.000.
Roof, Lewis B.; and Benningfield, L. V., Jr., to Phillips Petroleum Co. Dielectric constant detector. 4,301,401, Cl. 324-61.00R.
Rooney, Craig E., to Havens Steel Company. Bridge section composite and method of forming same. 4,300,320, Cl. 52-173.00R.
Roos, John C., to Bunker Ramo Corporation. Means and method for maintaining synchronization of a spread spectrum or other receiver clock. 4,301,537, Cl. 375-1.000.
Rooze, Antonius J.; den Best, Jan; and Melman, Gerard J., to Estel Hoogovens BV. Manufacture of cast-iron ingot moulds. 4,300,616, Cl. 164-124.000.
Roques, Jean-Claude B.: *See—*
Royer, Alain L. A.; Roques, Jean-Claude B.; and Dumas, Bernard J. L., 4,300,598, Cl. 138-177.000.
Rose, Stanley E.; and Fulks, Robert G., to Genrad, Inc. High speed print head system and method. 4,300,846, Cl. 400-124.000.
Rosenberg, Robert D., to Riker Laboratories, Inc. Heparin preparation. 4,301,153, Cl. 424-183.000.
Rosenberger, Gregory J.; and Peters, Louis, to Matthey Bishop, Inc. Method of preparing a metal substrate for use in a catalytic converter. 4,300,956, Cl. 148-6.300.
Rosensaft, Michael N.; and Webb, Richard L., to American Cyanamid Company. Synthetic polyester surgical articles. 4,300,565, Cl. 128-335.500.
Rosicke, Berd: *See—*
Rebbe, Klaus; Rosicke, Berd; and Wellmann, Klaus, 4,300,573, Cl. 128-686.000.
Ross, William D., to William D. Ross Manufacturing Corporation. Key blank impressioning tool. 4,300,416, Cl. 81-463.000.
Roth, Martin: *See—*
Lohmann, Dieter; Roth, Martin; and Baumann, Marcus, 4,301,075, Cl. 260-326.5FM.
Rothermel, Ronald R.: *See—*
Kimbrough, Andrew G.; Rothermel, Ronald R.; and Viri, Donald P., 4,301,355, Cl. 219-137.0PS.
Rothwell, Allan R.: *See—*
O'Neill, George J.; and Rothwell, Allan R., 4,300,580, Cl. 132-7.000.
Rottlander, Manfred, to Goetze AG. Holder for annular workpieces. 4,300,419, Cl. 82-44.000.
Rounbehler, David P.; and Reisch, John W., to Thermo Electron Corporation. Molecular sieve trap for nitrogen compound detection. 4,301,114, Cl. 422-52.000.
Roux, Claude P.: *See—*
Torossian, Dieran R.; Roux, Claude P.; and Aubard, Gilbert G., 4,301,163, Cl. 424-263.000.
Royer, Alain L. A.; Roques, Jean-Claude B.; and Dumas, Bernard J. L., to Pont-A-Mousson S.A. Tubular steel members for underwater pipelines. 4,300,598, Cl. 138-177.000.
Ruby, William S.: *See—*
Hochstrasser, Otto; Ruby, William S.; and Madaffore, Frank V., 4,301,320, Cl. 13-32.000.
Rudel, Harry W., to Dia-Sert Corp. Disposable female contraceptive. 4,300,544, Cl. 128-127.000.
Rudolph, Hans: *See—*
Mayer, Wolfram; Rudolph, Hans; De Cleur, Eckhard; and Schonfelder, Manfred, 4,301,186, Cl. 427-54.100.
Rule, Norman G.: *See—*
Contois, Lawrence E.; and Rule, Norman G., 4,301,226, Cl. 430-72.000.
Rumyantseva, Galina N.; Grebeshova, Renata N.; Kalunyants, Kalust A.; Artemieva, Irina V.; and Lomakina, Raisa D. Process for producing rose oil. 4,301,251, Cl. 435-267.000.
Ruszala, Frederick B.: *See—*
Keith, Everette R.; Cook, Kenneth J.; Power, Joseph S.; and Ruszala, Frederick B., 4,301,512, Cl. 364-801.000.
Ryan, Kenneth W.; and Rogers, Elmer H., Jr., to Aluminum Company of America. System for transporting particulate solids from high temperature to low temperature zone. 4,301,138, Cl. 423-495.000.
Rybert, Vyacheslav F.: *See—*
Mitin, Leonid A.; Fadeev, Petr Y.; Ponomarev, Leonid F.; Fadeev, Vladimir Y.; Rybert, Vyacheslav F.; Reutsky, Jury V.; Kulagin, Rim A.; Vorozheikin, Anatoly A.; Ermilov, Nikolai P.; Dimova, Lidia P.; Doskaziev, Adil G.; Korobkov, Vladlen V.; Babenko, Sergei A.; Akhmatov, Mikhail M.; Zhaksybaev, Nabi K., deceased; and Zhaksybaeva, Ekaterina S., executrix, 4,300,802, Cl. 299-64.000.
Rydz, Leon. Moving surface water driven power apparatus. 4,301,377, Cl. 290-43.000.
Rye, Grover W.: *See—*
Marencak, Karol; and Rye, Grover W., 4,300,957, Cl. 148-6.310.
Saab-Scania AB: *See—*
Sjodin, Bo, 4,301,373, Cl. 250-560.000.
Sabroff, Richard R.: *See—*
Anderson, John A.; Born, Richard C.; Knopf, Frank A.; Sabroff, Richard R.; Schutten, Herman P.; and Van Zeeland, Donald L., 4,301,508, Cl. 364-483.000.
Sacco, Leonard R. Design of hydraulic circuits for the automatic operation of heliostats. 4,300,533, Cl. 126-425.000.
Sadykov, Vasily I.: *See—*
Ushakov, Konstantin I.; Khilko, Mikhail E.; Felman, Rina I.; Sadykov, Vasily I.; Kalnin, Evgeny I.; and Kovgan, Pavel A., 4,300,949, Cl. 75-73.000.

Saiki, Shuji: *See—*
Sakamoto, Naraji; Saiki, Shuji; Sato, Kazue; Murata, Kousaku; and Yamamoto, Hiroshi, 4,300,655, Cl. 181-167.000.
Saila, Tauno. Adjustable toggle locking closed-end wrench. 4,300,415, Cl. 81-128.000.
Sainato, Albert; Cervik, Joseph; and Prosser, Leonard J., Jr., to United States of America, Interior. Flexible continuous grout filled packer for use with a water infusion system. 4,300,631, Cl. 166-187.000.
Saito, Hiroyasu: *See—*
Kameyama, Akinori; Saito, Hiroyasu; and Inomata, Jihei, 4,301,263, Cl. 526-68.000.
Saito, Isao: *See—*
Yamanaka, Motosuke; Saito, Isao; Yamatsu, Kiyomi; and Fujimoto, Takako, 4,301,169, Cl. 424-273.00R.
Saito, Mitsuo, to Fuji Photo Film Co., Ltd. Process for forming light-sensitive silver halide crystals. 4,301,241, Cl. 430-569.000.
Sajewski, Vincent F.: *See—*
Cumming, Richard J.; DeBano, John; Sajewski, Vincent F.; Zens, John F.; and Gardella, William A., 4,300,894, Cl. 493-210.000.
Sakagami, Mamoru, to Sekisui Kagaku Kogyo Kabushiki Kaisha. Self-cleaning type extruder. 4,300,839, Cl. 366-85.000.
Sakaki, Hirokazu; Shirai, Akira; and Ohashi, Azusa, to Fuji Photo Film Co., Ltd.; and Nippon Light Metal Co., Ltd. Electrolytically grained aluminum support for making a lithographic plate and presensitized lithographic printing plate. 4,301,229, Cl. 430-158.000.
Sakakino, Takahiro; and Iwakiri, Norio, to Omron Tateisi Electronics Co. Illuminated pushbutton switch. 4,301,344, Cl. 200-314.000.
Sakamoto, Naraji; Saiki, Shuji; Sato, Kazue; Murata, Kousaku; and Yamamoto, Hiroshi, to Matsushita Electric Industrial Co., Ltd. Acoustic diaphragm for speakers and method of producing the same. 4,300,655, Cl. 181-167.000.
Sakane, Toshio; Hosoe, Kazuya; Kinoshita, Takao; Tsunekawa, Tokuichi; and Kawabata, Takashi, to Canon Kabushiki Kaisha. TV Camera with focus detecting means. 4,301,478, Cl. 358-227.000.
Sakata, Mamoru, to Honda Giken Kogyo Kabushiki Kaisha. Engine mounting structure for vehicles. 4,300,649, Cl. 180-55.000.
Salem Corporation: *See—*
Heard, Harold; and Wilt, Charles R., 4,300,291, Cl. 34-10.000.
Sallee, Bradley T., to Tracor, Inc. Method and apparatus for measuring pneumatic differential drag forces. 4,300,451, Cl. 102-223.000.
Sallersbeck, Konrad: *See—*
Deubzer, Bernward; Brunner, Erich; Wilhelm, Herman; and Sallersbeck, Konrad, 4,301,215, Cl. 428-447.000.
Salter, Stephen H.: *See—*
Laithwaite, Eric R.; and Salter, Stephen H., 4,300,871, Cl. 417-331.000.
Salvas, Roger J.: *See—*
Smith, James D.; Salvas, Roger J.; and Shaw, Ralph B., 4,300,684, Cl. 206-493.000.
Salviata Impianti S.p.A.: *See—*
Salviati, Antonio, 4,300,881, Cl. 432-241.000.
Salviati, Antonio, to Salviata Impianti S.p.A. Truck or the like for conveying ceramic articles through a kiln. 4,300,881, Cl. 432-241.000.
Sanchez, Moises G.; and Herrera, Jose E., to W. R. Grace & Co. Extruded alumina catalyst support having controlled distribution of pore sizes. 4,301,037, Cl. 252-462.000.
Sanchez, Moises G., to W. R. Grace & Co. Oxidation of phosphoric acid plus K compound addition. 4,301,131, Cl. 423-321.00R.
Sande, Lloyd P. Adjustable pole-mounted mail box support. 4,300,739, Cl. 248-219.400.
Sanders Associates, Inc.: *See—*
Chapman, Paul W., 4,300,477, Cl. 119-2.000.
Sanders, James M.: *See—*
Sprecker, Mark A.; Sanders, James M.; Schreiber, William L.; Watkins, Hugh; Vinals, Joaquin F.; Shuster, Edward J.; O'Rourke, Thomas J.; Hagedorn, Myrna L.; and Klemarczyk, Philip, 4,301,302, Cl. 568-373.000.
Sandoz, Inc.: *See—*
Houlihan, William J., 4,301,170, Cl. 424-273.00R.
Spencer, Homer K., 4,301,158, Cl. 424-228.000.
Sandoz Ltd.: *See—*
Pfaffli, Paul; and Hauth, Hartmut, 4,301,290, Cl. 546-143.000.
Schmid, Hans-Rudolf, 4,300,899, Cl. 8-455.000.
Sandvik Aktiebolag: *See—*
Ingelstrom, Nils A.; and Akesson, Leif A. E., 4,300,952, Cl. 75-238.000.
Sangamo Weston, Inc.: *See—*
Becker, Dale F., 4,300,350, Cl. 60-528.000.
Sankyo Company Ltd.: *See—*
Konotsune, Takuo; and Kawakubo, Katsuhiko, 4,301,293, Cl. 548-377.000.
Santamaria, Joseph P., to Oiltrol, Inc. Marine barrier. 4,300,857, Cl. 405-70.000.
Santens, Lieven J. M. E.; and Vander Beke, Robert M., to Centre Scientifique et Technique de l'Industrie Textile Belge, en abrege: "Centexbel"; and "Santens", Societe de Personnes a responsabilite Limitee. Method for bleaching and dyeing spooled threads. 4,300,251, Cl. 8-149.100.
"Santens", Societe de Personnes a responsabilite Limitee: *See—*
Santens, Lieven J. M. E.; and Vander Beke, Robert M., 4,300,251, Cl. 8-149.100.
Santilli, Arthur A.: *See—*
Scotese, Anthony C.; Morris, Robert L.; and Santilli, Arthur A., 4,301,281, Cl. 544-80.000.
Santoro, Giovanni. Unit for transmitting the movement of a motor to the cassette spool driving gears in a cassette tape recorder. 4,301,483, Cl. 360-96.300.
Santostasi, Paul, to Sun Coast Plastic Closures, Inc. Closure cap. 4,300,701, Cl. 220-289.000.
Sanvordeker, Dilip R., to G. D. Searle & Co. Stabilization of 16-oxygenated prostanoic acid derivatives. 4,301,146, Cl. 424-80.000.
Sartorius GmbH: *See—*
Knothe, Erich; Melcher, Franz-Josef; Ober, Jurgen; and Behrend, Lothar, 4,300,647, Cl. 177-212.000.
Melcher, Franz-Josef; Berg, Christoph; and Knothe, Erich, 4,300,646, Cl. 177-212.000.
Sarver, James C., Jr.: *See—*
Stamm, Johann A.; Sarver, James C., Jr.; and Knch, Ronald N., 4,301,011, Cl. 210-447.000.
Sasaki, Masami: *See—*
Sawaguchi, Masahiro; Sasaki, Masami; Hosoya, Hiroshi; and Oka, Toshiichiro, 4,301,484, Cl. 360-96.600.
Satake, Kunio: *See—*
Taguchi, Tadashi; Fujikawa, Noboru; Kohno, Mitsuo; Yoshitake, Katsumi; and Satake, Kunio, 4,301,230, Cl. 430-273.000.
Sato, Haruhito; Ichikawa, Hiroshi; Hayashi, Hiroshi; and Kurisaki, Konomu, to Idemitsu Kosan Company Limited. Sublimable perfume compositions. 4,301,043, Cl. 252-522.00A.
Sato, Kazue: *See—*
Sakamoto, Naraji; Saiki, Shuji; Sato, Kazue; Murata, Kousaku; and Yamamoto, Hiroshi, 4,300,655, Cl. 181-167.000.
Sato, Masaaki, to Olympus Optical Co., Ltd. Cassette tape recorder. 4,300,713, Cl. 226-190.000.
Sato, Norimoto; Miyaoka, Minoru; Yamasaki, Shin; Inoue, Kimio; Kuriyama, Akimasa; Fukui, Tsugushi; and Asai, Toshihiro, to Bridgestone Tire Co., Ltd.; and Kobe Steel, Ltd. Mixing and kneading machine. 4,300,838, Cl. 366-84.000.
Sato, Reisuke; and Ogawa, Tadashi, to Pioneer Electronic Corporation. Electronic tuning type receiver with digital to analog converter. 4,301,540, Cl. 455-180.000.
Sato, Tsutomu: *See—*
Isayama, Takuro; Komai, Hiromichi; Yamazaki, Hiroshi; and Sato, Tsutomu, 4,301,459, Cl. 346-140.00R.
Satoh, Seikoh: *See—*
Ishida, Yoshiyuki; and Satoh, Seikoh, 4,300,510, Cl. 123-512.000.
Sauer, Heinz, to Rasmussen GmbH. Housing for tightening elements of hose clips. 4,300,270, Cl. 24-274.00R.
Saunders, Gerald A., to Queen's University at Kingston. Pneumatic leg. 4,300,245, Cl. 3-18.000.
Savard, Guy; Lee, Robert G. H.; and Hornsey, Derek, to Canadian Liquid Air Ltd./Air Liquide Canada Ltee. Two zone apparatus for biological treatment of waste water. 4,301,007, Cl. 210-96.100.
Sawada, Satoru: *See—*
Nakamura, Kotaro; Suzuki, Yoshiaki; Hara, Hiroshi; Sawada, Satoru; and Oono, Shigeru, 4,301,223, Cl. 430-17.000.
Sawaguchi, Masahiro; Sasaki, Masami; Hosoya, Hiroshi; and Oka, Toshiichiro, to Victor Company of Japan, Limited. Cassette loading device of tape recorder. 4,301,484, Cl. 360-96.600.
Saxinger, Allan L.: *See—*
Danchak, Nicholas, Jr.; Saxinger, Allan L.; Gray, Roger M.; and Kockler, Barry C., 4,300,756, Cl. 271-8.00R.
Scartazzini, Riccardo, to Ciba-Geigy Corporation. Process for the production of 3-hydroxy compounds. 4,301,279, Cl. 544-016.000.
Schachar, Ronald A. Multifocal ophthalmic lens. 4,300,818, Cl. 351-7.000.
Schafer, Albert L.: *See—*
Koeneman, Robert M.; and Schafer, Albert L., 4,300,359, Cl. 62-379.000.
Schaich, Josef. Device for vaporizing fuel and controlling the temperature of the fuel in an internal combustion engine. 4,300,514, Cl. 123-557.000.
Scharrer, Konrad. Sealing cap. 4,300,702, Cl. 220-295.000.
Schechter, Michael M., to Ford Motor Company. Fuel injection and control systems. 4,300,509, Cl. 123-499.000.
Scheel, Rudiger: *See—*
Hater, Martin; Meininghaus, Fritz; and Scheel, Rudiger, 4,300,939, Cl. 71-25.000.
Schefbauer, Rupert J., to Inmont Corporation. Printing inks containing novel limed resinates. 4,301,055, Cl. 260-33.60R.
Scheffel, Herbert, to South African Inventions Development Corporation. Self-steering damping railway truck. 4,300,454, Cl. 105-168.000.
Scheller, Hans U., to Wurttembergische Parfumerie-Fabrik GmbH. Strong foaming toothpaste. 4,301,141, Cl. 424-7.000.
Schering Corporation: *See—*
Goodoow, Robert A.; Shade, Floyd J.; Sloboth, Thomas A.; and Kaye, Donald J., 4,300,545, Cl. 128-200.140.
Scheurecker, Werner, to Voest-Alpine Aktiengesellschaft. Strand guide arrangement to be used in a continuous casting plant. 4,300,619, Cl. 164-448.000.
Schieder, Rudolf; Telle, Helmut; Raue, Roderich; and Brinkwerth, Wolfgang, to Bayer Aktiengesellschaft. Fluorescent dyestuffs. 4,301,091, Cl. 260-505.00R.
Schiemann, Dieter; and Witte, Wolfgang, to Bodenseewerk Perkin-Elmer & Co., GmbH. Attenuator for stray light produced in monochromators. 4,300,835, Cl. 356-334.000.
Schiffarth, Josef; Lorkin, Clive G.; and Fletcher, Kenneth J., to Foseco International Limited. Protection of carbon articles. 4,301,387, Cl. 313-355.000.

Schiffers, Ulrich: *See—*
Frewer, Hans; Muller, Rainer; and Schiffers, Ulrich, 4,300,916, Cl. 48-210.000.
Schingnitz, Manfred: *See—*
Egert, Klaus; Heinrich, Wolfgang; Lucas, Klaus; Kuhlbrodt, Klaus-Otto; Berger, Friedrich; Gohler, Peter; Schingnitz, Manfred; Gross, Manfred; Jegorow, Aleksander; Fedotov, Vasilij; Gavrilin, Vladimir; Gudymov, Ernest; Semenov, Vladimir; Achmatov, Igol; Majdurov, Nikolaj; and Abraamov, Evgenij, 4,300,913, Cl. 48-67.000.
Schink, Norbert, to Siemens Aktiengesellschaft. Lead-doped silicon with enhanced semiconductor properties. 4,301,323, Cl. 136-261.000.
Schlegel Corporation: *See—*
Ficurilli, Nicholas, 4,300,316, Cl. 49-445.000.
Schlossman, Mitchell L., to Tevco Inc. Universal nail polish using polyester resin. 4,301,046, Cl. 260-16.000.
Schmid, Hans-Rudolf, to Sandoz Ltd. Triazine and pyrimidine derivatives us reserving agents. 4,300,899, Cl. 8-455.000.
Schmidt, Dietrich; Meissner, Bruno; Rath, Heinz-Jorg; Regler, Dieter; and Voss, Jurgen, to Wacker-Chemitronic Gesellschaft fur Elektronik-Grundstoffe mbH. Process for cementing semiconductor discs to carrier plates and product so obtained. 4,300,965, Cl. 156-154.000.
Schmidt, Edward D., to Dumas Seed Company. Bread process using milk substitnte. 4,301,179, Cl. 426-19.000.
Schmidt, Rudiger; Steininger, Franz; and Hillekamp, Klaus, to Babcock Krauss-Maffei. Process for the pyrolysis of refuse. 4,300,915, Cl. 48-197.00R.
Schmitt, Chris, to Jennings Compound Bow, Inc. Compound bow. 4,300,521, Cl. 124-23.00R.
Schmitt, Frederick L.: *See—*
Sprecker, Mark A.; Schmitt, Frederick L.; Vock, Manfred H.; Vinals, Joaquin F.; and Kiwala, Jacob, 4,301,018, Cl. 252-8.600.
Sprecker, Mark A.; Schmitt, Frederick L.; Vock, Manfred H.; Vinals, Joaquin F.; and Kiwala, Jacob, 4,301,022, Cl. 252-174.110.
Sprecker, Mark A.; Schmitt, Frederick L.; Vock, Manfred H.; Vinals, Joaquin F.; and Kiwela, Jacob, 4,301,024, Cl. 252-301.310.
Sprecker, Mark A.; Schmitt, Frederick L.; Vock, Manfred H.; Vinals, Joaquin F.; and Kiwala, Jacob, 4,301,309, Cl. 568-826.000.
Wiegers, Wilhelmus J.; Sprecker, Mark A.; Watkins, Hugh; Vock, Manfred H.; and Schmitt, Frederick L., 4,301,076, Cl. 260-345.200.
Schmitz, Andreas: *See—*
Fischer, Berthold; Kabelitz, Hans-Peter; Pfaff, Hansen; and Schmitz, Andreas, 4,300,875, Cl. 418-55.000.
Schmoll, George F., III, to CBS Inc. Synthesizer for organ voices. 4,300,435, Cl. 84-1.190.
Schneider, Horst: *See—*
Achelpohl, Fritz; and Schneider, Horst, 4,300,893, Cl. 493-194.000.
Schneider, Irwin, to United States of America, Navy. Solid state laser and material. 4,301,426, Cl. 331-94.50P.
Schnell, Philip G., to Standard Oil Company (Indiana). Stabilization of heat sensitive antioxidants. 4,301,185, Cl. 426-546.000.
Schoen Investments, Inc.: *See—*
Schoen, John F., 4,300,746, Cl. 249-13.000.
Schoen, John F., to Schoen Investments, Inc. Apparatus and method for manufacturing concrete structural modules. 4,300,746, Cl. 249-13.000.
Schoenmann, Charles F.; and Deric, J. Mark, to Otis Elevator Company. Elevator door motion reversal. 4,300,660, Cl. 187-29.00R.
Schomerus, Cristoph. Floor covering for indoor sports arena. 4,301,207, Cl. 428-241.000.
Schon, Otmar P.; and Klauck, Manfred, to Flutec Fluidtechnische Gerate GmbH. Apparatus for filtering a liquid. 4,301,005, Cl. 210-90.000.
Schonfelder, Manfred: *See—*
Mayer, Wolfram; Rudolph, Hans; De Cleur, Eckhard; and Schonfelder, Manfred, 4,301,186, Cl. 427-54.100.
Schoppe, Fritz; and Wenz, Wilhelm. Apparatus and process for the operation of an environmentally satisfactory coal fired plant. 4,300,480, Cl. 122-121.000.
Schreiber, William L.: *See—*
Sprecker, Mark A.; Sanders, James M.; Schreiber, William L.; Watkins, Hugh; Vinals, Joaquin F.; Shuster, Edward J.; O'Rourke, Thomas J.; Hagedorn, Myrna L.; and Klemarczyk, Philip, 4,301,302, Cl. 568-373.000.
Schreier, Wilford R.; and Taylor, Horace E., to Marmon Company. Harmony generating circuit for a musical instrument. 4,300,433, Cl. 84-1.170.
Schroeder, Daniel R.: *See—*
Cohlman, Donald C.; and Schroeder, Daniel R., 4,301,378, Cl. 307-115.000.
Schroeder, Jeizy; Lewandowski, Mieczyslaw; Kuzko, Antoni; Gorecki, Henryk; Zielinski, Krzysztof; Pozniak, Tadeusz; Zieba, Stefan; Gorecka, Helena; Pawelczyk, Adam; and Wysocki, Andizej, to Politechnika Wroclawska. Method of washing waste phosphogypsum. 4,301,130, Cl. 423-320.000.
Schroeder, William, Jr.; and Fink, Raymond N., to Hoffmann-La Roche Inc. Safety enclosure for glass bottles containing hazardous materials. 4,300,612, Cl. 150-52.00R.
Schubert, August: *See—*
Seltenheim, Volker; Schubert, August; Paschakarnis, Peter; Vonderau, Josef; Ilzig, Frank; Frosch, Walter; and Fuglein, Egon, 4,301,205, Cl. 428-127.000.
Schubert & Salzer: *See—*
Pozzo, Hans, 4,300,340, Cl. 57-80.000.
Pozzo, Hans, 4,300,341, Cl. 57-80.000.
Schuberth, Winfried; and Hanny, John F., to American Thermometer Co., Inc. Cholesteric compositions. 4,301,023, Cl. 252-299.700.
Schultz, Daryl A. Hog lot gate. 4,300,752, Cl. 256-73.000.
Schultz, William W.: *See—*
Phillips, John D.; and Schultz, William W., 4,300,932, Cl. 65-14.000.
Schulz, Hans-Hermann: *See—*
Suling, Carlhans; Balle, Gerhard; Leusner, Bernd; Schulz, Hans-Hermann; and Walkowiak, Michael, 4,300,886, Cl. 433-202.000.
Schulze, Ehrhart, to Stiegler, Karl Heinz. Machine for welding thermoplastic sheets. 4,300,977, Cl. 156-515.000.
Schulzke, Peter: *See—*
Streit, Klaus; Buxmeyer, Walter; Schulzke, Peter; and Harsch, Klaus, 4,300,508, Cl. 123-490.000.
Schumacher, Georges: *See—*
Hochstrasser, Walter P.; and Schumacher, Georges, 4,300,296, Cl. 38-17.000.
Schumacher, Gustav: *See—*
Dalle Donne, Mario; Dorner, Stefan; and Schumacher, Gustav, 4,300,983, Cl. 376-280.000.
Schurter, Rolf: *See—*
Bohner, Beat; Rempfler, Hermann; and Schurter, Rolf, 4,300,944, Cl. 71-94.000.
Schutten, Herman P.: *See—*
Anderson, John A.; Born, Richard C.; Knopf, Frank A.; Sahroff, Richard R.; Schutten, Herman P.; and Van Zeeland, Donald L., 4,301,508, Cl. 364-483.000.
Schwarz, Albrecht, to International Telephone and Telegraph Corporation. Use of an inductor within a full bridge d.c.-d.c. power converter. 4,301,496, Cl. 363-17.000.
Schwarzmann, Matthias: *See—*
Marosi, Laszlo; Stabenow, Joachim; and Schwarzmann, Matthias, 4,300,911, Cl. 23-300.000.
Schweder, Walter M.; and Lenz, Henry G., to General Electric Co. Rotor laminae assembly for a cast rotor dynamoelectric machine. 4,301,386, Cl. 310-59.000.
Schwee, Leonard J.: *See—*
Gordon, Daniel I.; Schwee, Leonard J.; and Anderson, Wallace E., 4,301,418, Cl. 330-62.000.
Schweikle, George E.; and Stanback, Harris I., to Square D Company. Insulator mounting for panelboard. 4,301,493, Cl. 361-355.000.
Schwing, Gregory W.; and Woods, Thomas S., to Du Pont de Nemours, E. I., and Company. Herbicidal O-alkyl sulfonylisoureas. 4,301,286, Cl. 544-211.000.
SCM Corporation: *See—*
Cox, Charles E.; and Eeckhout, Roger V., 4,300,870, Cl. 417-53.000.
Scotese, Anthony C.; Morris, Robert L.; and Santilli, Arthur A., to American Home Products Corporation. 7,8-Dihydro-2,5,8-trisubstituted-7-oxo-pyrido[2,3-d]-pyrimidine-6-carboxylic acid amides. 4,301,281, Cl. 544-80.000.
Scott, Robert J., to Dennison Manufacturing Company. Stabilized labelling of objects. 4,300,975, Cl. 156-456.000.
Scoville Inc.: *See—*
Kaiser, Donald J.; Behar, Albert; and Krupicka, William A., 4,300,370, Cl. 70-54.000.
Sea Solar Power, Inc.: *See—*
Anderson, J. H., 4,301,375, Cl. 290-1.00R.
Seberg, Charles H., to Abbott Laboratories. Winged catheter placement assembly. 4,300,553, Cl. 128-214.400.
Secnrax, Inc.: *See—*
Thomas, Robert E., 4,300,690, Cl. 211-4.000.
Sedco, Inc.: *See—*
Taylor, Donald F., 4,300,585, Cl. 137-107.000.
Segall, Jean: *See—*
Quillevere, Jean C.; and Segall, Jean, 4,300,936, Cl. 65-114.000.
Segawa, Takashi, to Shimano Industrial Company Limited. Gear crank for a bicycle. 4,300,411, Cl. 74-594.200.
Segredo, Guillermo T., to FMC Corporation. Citrus fruit juice extractor having a multiple chamber juice manifold. 4,300,449, Cl. 100-98.00R.
Sehnert, Robert J.: *See—*
Bione, Angelo A.; Sehnert, Robert J.; and Taylor, Horace E., 4,300,430, Cl. 84-1.010.
Seidel, Albert: *See—*
Buchs, Wolfgang; Muller, Martin; Malburg, Werner; and Seidel, Albert, 4,300,354, Cl. 62-45.000.
Seki, Nagataka; and Tsuruta, Ynkioori, to Tokyo Shibaura Denki Kabushiki Kaisha. Gate control system of the inverter using gate-turn-off thyristors. 4,301,500, Cl. 363-58.000.
Sekisui Kagaku Kogyo Kabushiki Kaisha: *See—*
Sakagami, Mamoru, 4,300,839, Cl. 366-85.000.
Tanei, Tadayoshi; Miyamoto, Minoru; and Ohno, Akio, 4,301,356, Cl. 219-213.000.
Seliger, Robert L.; and Dumage, Laurence C., to Hnghes Aircraft Company. Dual discharge plasma device. 4,301,391, Cl. 315-111.310.
Selleck, Robert A.: *See—*
Degnan, William G.; and Selleck, Robert A., 4,300,439, Cl. 92-146.000.
Seltenheim, Volker; Schubert, August; Paschakarnis, Peter; Vonderau, Josef; Ilzig, Frank; Frosch, Walter; and Fuglein, Egon, to Fichtel & Sachs A.G. Device for fastening objects on a flat support member. 4,301,205, Cl. 428-127.000.

Semenov, Vladimir: *See—*
Egert, Klaus; Heinrich, Wolfgang; Lucas, Klaus; Kuhlbrodt, Klaus-Otto; Berger, Friedrich; Gohler, Peter; Schingnitz, Manfred; Gross, Manfred; Jegorow, Aleksander; Fedotov, Vasilij; Gavrilin, Vladimir; Gudymov, Ernest; Semenov, Vladimir; Achmatov, Igol; Majdurov, Nikolaj; and Abraamov, Evgenij, 4,300,913, Cl. 48-67.000.
Senshu, Takao: *See—*
Hatada, Toshio; Senshu, Takao; Arai, Akira; Harada, Fumio; Matsuzaki, Atsushi; Futawatari, Hajime; Imaizumi, Yutaka; and Takeda, Sumiyoshi, 4,300,629, Cl. 165-151.000.
Senyek, Michael L.: *See—*
Lal, Joginder; and Senyek, Michael L., 4,301,258, Cl. 525-334.000.
Lal, Joginder; and Senyek, Michael L., 4,301,259, Cl. 525-334.000.
Sergeant, Ronald G.: *See—*
Bunyea, John R.; Ferrill, Jess B.; Hutchinson, Ray A. J.; and Sergeant, Ronald G., 4,300,282, Cl. 29-751.000.
Setti, Duilio; and Balbo, Peter M., to Abcor, Inc. Spiral membrane module with controlled by-pass seal. 4,301,013, Cl. 210-637.000.
Seymour, Samuel L., to PPG Industries, Inc. Shaping glass sheets by drop forming with improved sag control. 4,300,935, Cl. 65-107.000.
Shade, Floyd J.: *See—*
Goodnow, Robert A.; Shade, Floyd J.; Sloboth, Thomas A.; and Kaye, Donald J., 4,300,545, Cl. 128-200.140.
Shah, Kishore R., to Kendall Company, The. Water absorptive composition. 4,300,820, Cl. 351-160.00H.
Shah, Ricky H., to Zenith Radio Corporation. Method and solution for conductive coating for use in cathode ray tubes. 4,301,041, Cl. 252-511.000.
Sharp, David E. Power operated brush rake. 4,300,337, Cl. 56-376.000.
Shasta Industries, Inc.: *See—*
Gould, Henry D., 4,300,246, Cl. 4-490.000.
Shaull, Cecelia A. Garment and method of making same. 4,300,241, Cl. 2-400.000.
Shaver, Marvin B.: *See—*
Vadas, Robert M.; and Shaver, Marvin B., 4,300,292, Cl. 34-108.000.
Shaw, Ralph B.: *See—*
Smith, James D.; Salvas, Roger J.; and Shaw, Ralph B., 4,300,684, Cl. 206-493.000.
Shaw, Richard J.: *See—*
Burns, Fredrick B.; and Shaw, Richard J., 4,300,258, Cl. 15-210.00R.
Shaw, Wilfrid G.; Rinz, James E.; and Paparizos, Christos, to Standard Oil Company, The. Bi-containing methacrolein oxidation catalysts. 4,301,030, Cl. 252-435.000.
Shaw, Wilfrid G.; Kuch, Philip L.; and Paparizos, Christos, to Standard Oil Company, The. Methacrolein oxidation catalysts. 4,301,031, Cl. 252-435.000.
Shaw, Wilfrid G.; and Terrill, David B., to Standard Oil Company. Catalyst for the production of unsaturated aliphatic acids. 4,301,038, Cl. 252-468.000.
Shell Internationale Research Maatschappij B.V.: *See—*
Steenge, Wiecher D. E., 4,300,801, Cl. 299-5.000.
Shell Oil Company: *See—*
Graiff, Leonard B.; and Haury, Earl J., 4,300,494, Cl. 123-193.00H.
Haynes, George R., 4,301,172, Cl. 424-275.000.
Jackson, Roy J., 4,301,261, Cl. 525-507.000.
Kuijpers, Petrus J. M.; Stuivenwold, Paulus A.; and van Arkel, Johannes, 4,300,399, Cl. 73-861.040.
Stewart, Robert B., 4,300,633, Cl. 166-250.000.
Shemtov, Israel. Display stand and method of forming same. 4,300,691, Cl. 211-131.000.
Shepard, Steve A.: *See—*
Haag, George A.; Fogg, G. Douglas; Greenley, Gordon A.; Shepard, Steve A.; and Terry, F. Duncan, 4,301,513, Cl. 364-900.000.
Shibata, Kenji; and Ozima, Masami, to Nisshin Flour Milling Co., Ltd. Anticoccidial drug. 4,301,148, Cl. 424-93.000.
Shick, Lloyd G.: *See—*
Franz, Helmut; Hanlon, James H.; and Shick, Lloyd G., 4,301,197, Cl. 427-353.000.
Shigematsu, Kazuo: *See—*
Tsunoda, Yoshito; Miyauchi, Toshimitsu; Shigematsu, Kazuo; and Tatsuno, Kimio, 4,301,527, Cl. 369-45.000.
Shimano Industrial Company, Limited: *See—*
Hasebe, Masayuki, 4,300,804, Cl. 301-105.00B.
Segawa, Takashi, 4,300,411, Cl. 74-594.200.
Shimanovich, Vladimir D.: *See—*
Shipai, Andrei K.; Zolotovsky, Anatoly I.; Moskovsky, Vladislav G.; Naumenko, Nikolai N.; Shimanovich, Vladimir D.; and Kiselevsky, Leonid I., 4,301,352, Cl. 219-121.0PR.
Shimazaki, Yumiko: *See—*
Fukinuki, Takahiko; Yoshigi, Hiroshi; and Shimazaki, Yumiko, 4,301,479, Cl. 358-257.000.
Shimizu, Noboru: *See—*
Suenaga, Masahide; Shimizu, Noboru; Kudo, Mitsuhiro; Yamaguchi, Hiroshi; and Mitani, Masao, 4,301,353, Cl. 219-121.0LJ.
Shimizu, Sachinobu, to Nippon Telegraph & Telephone Public Corporation. Apparatus for determining positional coordinates utilizing the terrestrial magnetism as a directional reference. 4,300,390, Cl. 73-178.00R.
Shimizu, Tomohiro; and Muranaga, Yoshinobu, to Casio Computer Co., Ltd. Programmable calculator with a device for controlling the reading of program data. 4,301,511, Cl. 364-709.000.
Shindo, Minoru: *See—*
Oi, Nobuhiro; Aoki, Bunya; Shinozaki, Teizo; Moro, Kanji; Matsunaga, Isao; Noto, Takao; Nebashi, Toshiyuki; Harada, Yusuke; Endo, Hisao; Kimura, Takao; Okazaki, Hiroshi; Ogawa, Haruki; and Shindo, Minoru, 4,301,161, Cl. 424-246.000.
Shinozaki, Teizo: *See—*
Oi, Nobuhiro; Aoki, Bunya; Shinozaki, Teizo; Moro, Kanji; Matsunaga, Isao; Noto, Takao; Nebashi, Toshiyuki; Harada, Yusuke; Endo, Hisao; Kimura, Takao; Okazaki, Hiroshi; Ogawa, Haruki; and Shindo, Minoru, 4,301,161, Cl. 424-246.000.
Shionogi & Co., Ltd.: *See—*
Ogata, Masaru; Matsumoto, Hiroshi; Hirose, Katsumi; and Eigyo, Masami, 4,301,159, Cl. 424-230.000.
Shipai, Andrei K.; Zolotovsky, Anatoly I.; Moskovsky, Vladislav G.; Naumenko, Nikolai N.; Shimanovich, Vladimir D.; and Kiselevsky, Leonid I. Device for surface fusion treatment of artificial stone products. 4,301,352, Cl. 219-121.0PR.
Shirai, Akira: *See—*
Sakaki, Hirokazu; Shirai, Akira; and Ohashi, Azusa, 4,301,229, Cl. 430-158.000.
Shirouzu, Shunji; and Noda, Ryuzo, to Tokyo Shibaura Denki Kabushiki Kaisha. Semiconductor pressure detection device. 4,300,395, Cl. 73-708.000.
Shoji, Koji; and Hamamoto, Yoshinobu, to Anritsu Electric Company Limited. Automatic Y-axis offset system. 4,301,393, Cl. 315-367.000.
Shotwell, Kenneth E.; and Gaines, Albert L., to Combustion Engineering, Inc. Superconducting magnet assembly. 4,301,385, Cl. 310-11.000.
Showa Denko Kabushiki Kaisha: *See—*
Nakama, Kazumitsu, 4,300,941, Cl. 71-65.000.
Shriner, Walter. Microwave warning device. 4,301,406, Cl. 324-95.000.
Shumka, Alex: *See—*
Miller, Emmett L.; Shumka, Alex; and Gauthier, Michael K., 4,301,409, Cl. 324-158.00D.
Shuster, Edward J.: *See—*
Sprecker, Mark A.; Sanders, James M.; Schreiber, William L.; Watkins, Hugh; Vinals, Joaquin F.; Shuster, Edward J.; O'Rourke, Thomas J.; Hagedorn, Myrna L.; and Klemarczyk, Philip, 4,301,302, Cl. 568-373.000.
Shy, Min C. Vacuum insulated bottle with mechanism for dispensing liquid by compression. 4,300,705, Cl. 222-131.000.
Sibley, Clifton B., to Ferrofluidics Corporation. Chain introduction means for a crystal growth pulling head. 4,301,120, Cl. 422-249.000.
Siegman, Edwin J.: *See—*
Coleman, Denis; and Siegman, Edwin J., 4,301,105, Cl. 264-205.000.
Coleman, Denis; and Siegman, Edwin J., 4,301,106, Cl. 264-205.000.
Siemens Aktiengesellschaft: *See—*
De Steur, Hubert, 4,301,413, Cl. 324-438.000.
Goebel, Herbert, 4,301,364, Cl. 250-272.000.
Janetzky, Dittmar, 4,301,532, Cl. 370-85.000.
Koslar, Manfred, 4,301,407, Cl. 324-96.000.
Lechner, Robert, 4,301,334, Cl. 179-16.0AA.
Schink, Norbert, 4,301,323, Cl. 136-261.000.
Wieder, Armin, 4,300,279, Cl. 29-571.000.
Siemens-Allis, Inc.: *See—*
Stich, Frederick A., 4,301,489, Cl. 361-9.000.
Siener, Philip R., Jr.: *See—*
McCusker, Joseph H.; and Siener, Philip R., Jr., 4,301,204, Cl. 428-110.000.
Sigl, Wayne C., to Kimberly-Clark Corporation. Methods and apparatus for elasticizing discrete areas of conformable garments. 4,300,967, Cl. 156-164.000.
Sih, John C., to Upjohn Company, The. 19-Hydroxy-19-methyl-PGI_1 compounds. 4,301,079, Cl. 260-346.220.
Sikorski, James A.: *See—*
Dutra, Gerard A.; and Sikorski, James A., 4,300,943, Cl. 71-87.000.
Silverman, Max. Hampers with improved lifting apparatus. 4,300,611, Cl. 150-51.000.
Silverstrand, Thomas R. Four-post hoist. 4,300,659, Cl. 187-8.590.
Silvey, Trevor I., to Plessey Handel und Investments AG. Hydrodynamic devices. 4,300,466, Cl. 114-244.000.
Simmons, Robert, to Vision Metal Fabricators Corporation. Vehicle traction mat. 4,300,722, Cl. 238-14.000.
Simon, Frank J.; Reinke, William C.; Soo, Hong-Ming; Lanning, Christie L.; and Richert, Stanley H., to Ralston Purina Company. Process for producing a fish product. 4,301,180, Cl. 426-250.000.
Simon, Frank J.; Reinke, William C.; Soo, Hong-Ming; Kienstra, Mary; and Richert, Stanley H., to Ralston Purina Company. Process for producing a fish product. 4,301,181, Cl. 426-250.000.
Simon, Frank J.; Reinke, William C.; and Richert, Stanley H., to Ralston Purina Company. Process for producing a fish product. 4,301,182, Cl. 426-250.000.
Simons, Harold M., to Billings Energy Corporation. Granulating and activating metal to form metal hydride. 4,300,946, Cl. 75-0.50B.
Singer Company, The: *See—*
Jacyno, Henry, 4,300,357, Cl. 62-239.000.
Kreeley, Bruce K., 4,300,748, Cl. 251-5.000.
Sjodin, Bo, to Saab-Scania AB. Scanning of workpieces such as lumber cants. 4,301,373, Cl. 250-560.000.
Skadeland, David A. Dispersal of pathogenic material for pest control. 4,301,147, Cl. 424-93.000.
Skiles, Robert L.: *See—*
Thiele, Gerald H.; Freiberg, Ashley H.; Skiles, Robert L.; and King, David L., 4,300,945, Cl. 71-95.000.
Skinner, Frank R.: *See—*
Henry, Robert L.; and Skinner, Frank R., 4,300,522, Cl. 125-11.00R.

Skoli, Sigmund P.; Dulian, Robert J.; and Kemp, David M., to Mojonnier Bros. Co. Deaerator system having positive pressure indicating means. 4,300,923, Cl. 55-196.000.
Skyronics Aviation Inc.: *See—*
Munroe, Ronald G., 4,300,535, Cl. 126-432.000.
Slemmons, Charles O. Fireplace door seal. 4,300,528, Cl. 126-140.000.
Sloboda, Mieczyslaw H., to Johnson, Matthey & Co., Limited. Brazing rod comprising an alloy core coated with a layer of elastomer containing a flux. 4,301,211, Cl. 428-385.000.
Sloboth, Thomas A.: *See—*
Goodnow, Robert A.; Shade, Floyd J.; Sloboth, Thomas A.; and Kaye, Donald J., 4,300,545, Cl. 128-200.140.
Sluys, Wesley W., to Builders Concrete, Inc. Movable float system for boat launching ramps. 4,300,854, Cl. 405-1.000.
Sly, Eugene L.; and English, David C. Weighing scale for small loads. 4,300,645, Cl. 177-211.000.
Smeets, Arnoldus A.: *See—*
Broeksema, Egbert; and Smeets, Arnoldus A., 4,301,099, Cl. 264-25.000.
Smernoff, Ronald B., to Analytical Products, Inc. Gas-liquid equilibration apparatus. 4,301,117, Cl. 422-99.000.
Smith, Earl W.: *See—*
Hansel, William B.; and Smith, Earl W., 4,300,388, Cl. 73-49.200.
Smith, Herman W., to Upjohn Company, The. Trans-4,5,13,14-tetradehydro-PG1$_1$ compounds. 4,301,078, Cl. 260-346.220.
Smith, James D.; Salvas, Roger J.; and Shaw, Ralph B., to Fletcher-Terry Company, The. Glaziers point and retaining means. 4,300,684, Cl. 206-493.000.
Smith Kline & French Laboratories Limited: *See—*
Durant, Graham J.; and Ganellin, Charon R., 4,301,165, Cl. 424-269.000.
Smith, Trevor S., to Lucas Industries Limited. Shut-off valve arrangement for a gas turbine engine fuel. 4,300,347, Cl. 60-39.28R.
Smoker Products, Inc.: *See—*
Muse, Edward T., 4,300,444, Cl. 99-448.000.
Smoliar, Gerald D., to Burroughs Corporation. Error detection for multi-segmented indicia display. 4,301,450, Cl. 340-715.000.
Snitzer, Elias; and Meltz, Gerald, to United Technologies Corporation. Wide band multicore optical fiber. 4,300,816, Cl. 350-96.330.
Snyder, Paul J.: *See—*
Favin, David L.; Lynn, Peter F.; and Snyder, Paul J., 4,301,536, Cl. 371-22.000.
Socapex: *See—*
Malsot, Christian; Desmurs, Roland; and Bouygues, Jean, 4,300,815, Cl. 350-96.200.
Societe d'Assistance Techinque pour Produits Nestle S.A.: *See—*
Launay, Noel, 4,300,703, Cl. 221-187.000.
Societe d'Assistance Technique pour Produits Nestle SA: *See—*
Martin, Ernest N., 4,300,442, Cl. 99-289.00R.
Societe d'Etude et de Construction de Machines pour toutes Industries S.E.C.O.M.A.: *See—*
Perraud, Raymond, 4,300,642, Cl. 175-173.000.
Societe Industrielle de Produits de Synthese: *See—*
Torossian, Dieran R.; Roux, Claude P.; and Aubard, Gilbert G., 4,301,163, Cl. 424-263.000.
Societe Italiana Resine S.I.R. S.p.A.: *See—*
Canavesi, Roberto; Ligorati, Ferdinando; and Aglietti, Giancarlo, 4,301,308, Cl. 568-804.000.
Societe Lyonnaise des Applications Catalytiques: *See—*
Risse, Roger P. P., 4,301,035, Cl. 252-455.00R.
Societe Nationale Industrielle Aerospatiale: *See—*
Poubeau, Pierre, 4,300,807, Cl. 308-10.000.
Soderberg, John H.; Eckert, Alton B.; and McFiggans, Robert B., to Pitney Bowes Inc. Electronic postage meter having plural computing systems. 4,301,507, Cl. 364-464.000.
Sodick Co., Ltd.: *See—*
Fujikawa, Misao, 4,301,350, Cl. 219-69.00R.
Sokolov, Sergei S.: *See—*
Galkin, Mikhail M.; Kornienko, Marat I.; Podboronov, Boris P.; Sokolov, Sergei S.; and Furman, Anatoly V., 4,301,402, Cl. 324-62.000.
Solartron Electronic Group Limited: *See—*
Ley, Anthony J., 4,301,404, Cl. 324-77.00B.
Solheim, Peder R.; and Wallevik, Oddmund, to Norsk Hydro a.s. Electrical bridge attached to high current switch. 4,301,339, Cl. 200-146.00R.
Soo, Hong-Ming: *See—*
Simon, Frank J.; Reinke, William C.; Soo, Hong-Ming; Lanning, Christie L.; and Richert, Stanley H., 4,301,180, Cl. 426-250.000.
Simon, Frank J.; Reinke, William C.; Soo, Hong-Ming; Kienstra, Mary; and Richert, Stanley H., 4,301,181, Cl. 426-250.000.
South African Inventions Development Corporation: *See—*
Scheffel, Herbert, 4,300,454, Cl. 105-168.000.
South Wales Switchgear Limited: *See—*
Parry, John, 4,301,340, Cl. 200-147.00R.
Parry, John, 4,301,341, Cl. 200-147.00R.
Sowa, Michael W., to Union Carbide Corporation. Compound for pinhole-free rotational casting. 4,301,063, Cl. 260-45.85S.
Spamer, William S., to Mead Corporation, The. Automatic feed device for merchandise display. 4,300,693, Cl. 211-49.00D.
Sparks, Brian E.: *See—*
Lewis, Geoffrey A.; and Sparks, Brian E., 4,300,348, Cl. 60-39.28R.
Speakman, Edwin L.: *See—*
Kightlinger, Adrian P.; Speakman, Edwin L.; and Van Duzee, Grant T., 4,301,017, Cl. 252-8.600.
Spector, George: *See—*
Delgado, Jesus; and Spector, George, 4,300,525, Cl. 126-42.000.
Spectrolab: *See—*
Bartels, Frederick T. C., 4,301,321, Cl. 136-246.000.
Spectrum Medical Industries, Inc.: *See—*
Eddleman, Roy T.; and Moran, Gregory F., 4,301,010, Cl. 210-406.000.
Eddleman, Roy T.; and Moran, Gregory F., 4,301,118, Cl. 422-101.000.
Spencer, Homer K., to Sandoz, Inc. N-(2-Propynyl)-2,6-dinitro-benzenamine derivatives. 4,301,158, Cl. 424-228.000.
Spencer, John K.: *See—*
Naylor, Arthur V.; and Spencer, John K., 4,300,329, Cl. 53-506.000.
Sperling, Gustav. Passive restraint system. 4,300,788, Cl. 280-748.000.
Sperry Corporation: *See—*
Funk, Buddy K.; and Fowler, David M., III, 4,301,447, Cl. 340-365.00P.
Gravel, Robert L., 4,300,813, Cl. 350-96.100.
Phillips, Frederick W., II; and Priepke, Edward H., 4,300,726, Cl. 241-101.700.
Spiridonov, Viktor E.: *See—*
Nikandrov, Gennady A.; Alovyainikov, Alexandr A.; Varlamova, Ljudmila V.; Vulikh, Alexandr I.; Lopatin, Jury P.; Tikhomirov, Vladimir A.; Chebukhanova, Vera A.; Preobrazhensky, Pavel S.; Spiridonov, Viktor E.; Zhelonkin, Alexandr G.; and Varlamov, Rudolf P., 4,300,925, Cl. 55-242.000.
Sprecker, Mark A.; Schmitt, Frederick L.; Vock, Manfred H.; Vinals, Joaquin F.; and Kiwala, Jacob, to International Flavors & Fragrances Inc. Use of cyclic chemical compounds for augmenting or enhancing the aroma of fabric softener articles. 4,301,018, Cl. 252-8.600.
Sprecker, Mark A.; Schmitt, Frederick L.; Vock, Manfred H.; Vinals, Joaquin F.; and Kiwala, Jacob, to International Flavors & Fragrances Inc. Process for augmenting or enhancing the aroma of a detergent using 2,4,6-trimethylcyclohexanemethanol and derivatives. 4,301,022, Cl. 252-174.110.
Sprecker, Mark A.; Schmitt, Frederick L.; Vock, Manfred H.; Vinals, Joaquin F.; and Kiwala, Jacob, to International Flavors & Fragrances Inc. Use of cyclic chemical compounds for augmenting or enhancing the aroma of optical brightener composition. 4,301,024, Cl. 252-301.310.
Sprecker, Mark A.; Sanders, James M.; Schreiber, William L.; Watkins, Hugh; Vinals, Joaquin F.; Shuster, Edward J.; O'Rourke, Thomas J.; Hagedorn, Myrna L.; and Klemarczyk, Philip, to International Flavors & Fragrances Inc. Tetraalkyl substituted tricyclic ketone. 4,301,302, Cl. 568-373.000.
Sprecker, Mark A.; Schmitt, Frederick L.; Vock, Manfred H.; Vinals, Joaquin F.; and Kiwala, Jacob, to International Flavors & Fragrances Inc. Cyclohexenemethanols and lower alkyl esters thereof. 4,301,309, Cl. 568-826.000.
Sprecker, Mark A.: *See—*
Wiegers, Wilhelmus J.; Sprecker, Mark A.; Watkins, Hugh; Vock, Manfred H.; and Schmitt, Frederick L., 4,301,076, Cl. 260-345.200.
Square D Company: *See—*
Schweikle, George E.; and Stanback, Harris I., 4,301,493, Cl. 361-355.000.
SRI International: *See—*
Acton, Edward M.; and Mosher, Carol W., 4,301,277, Cl. 536-17.00A.
Stabenow, Joachim: *See—*
Marosi, Laszlo; Stabenow, Joachim; and Schwarzmann, Matthias, 4,300,911, Cl. 23-300.000.
Stachejko, Vitaly, to RCA Corporation. U-Shaped iris design exhibiting capacitive reactance in heavily loaded rectangular waveguide. 4,301,430, Cl. 333-24.100.
Stackhouse, William H., to Lantech Inc. Stretch wrapping apparatus with mechanical closure. 4,300,326, Cl. 53-211.000.
Stafl, Adolf, to Medical College of Wisconsin, Inc., The. Diagnostic method. 4,300,570, Cl. 128-665.000.
Stamm, Johann A.; Sarver, James C., Jr.; and Koch, Ronald N., to Rockwell International Corporation. Water strainer. 4,301,011, Cl. 210-447.000.
Stanback, Harris I.: *See—*
Schweikle, George E.; and Stanback, Harris I., 4,301,493, Cl. 361-355.000.
Standard Brands Incorporated: *See—*
Kightlinger, Adrian P.; Speakman, Edwin L.; and Van Duzee, Grant T., 4,301,017, Cl. 252-8.600.
Standard Oil Company: *See—*
Greene, Janice L., 4,301,087, Cl. 260-463.000.
Greene, Janice L., 4,301,319, Cl. 585-638.000.
Pesa, Frederick A.; and Graham, Anne M., 4,301,077, Cl. 260-346.110.
Pesa, Frederick A.; and Haase, Thomas A., 4,301,089, Cl. 260-465.100.
Pesa, Frederick A.; and Haase, Thomas A., 4,301,090, Cl. 260-465.400.
Shaw, Wilfrid G.; Rinz, James E.; and Paparizos, Christos, 4,301,030, Cl. 252-435.000.
Shaw, Wilfrid G.; Kuch, Philip L.; and Paparizos, Christos, 4,301,031, Cl. 252-435.000.
Shaw, Wilfrid G.; and Terrill, David B., 4,301,038, Cl. 252-468.000.
Standard Oil Company (Indiana): *See—*
Jezl, James L., 4,301,256, Cl. 525-247.000.
Meguerian, Garbis H.; Lorotson, John M.; and Vasalos, Iacovos A., 4,300,997, Cl. 208-120.000.

Schnell, Philip G., 4,301,185, Cl. 426-546.000.
Weisrock, William P., 4,301,247, Cl. 435-104.000.
Staodynamics, Inc.: *See—*
Wilson, Michael A., 4,300,575, Cl. 128-798.000.
Stauffer Chemical Company: *See—*
Thiele, Gerald H.; Freiberg, Ashley H.; Skiles, Robert L.; and King, David L., 4,300,945, Cl. 71-95.000.
Stearns, Stanley D. Sample introduction apparatus for gas chromatographic analysis using packed or capillary bore open tubular columns and method of testing. 4,300,393, Cl. 73-863.110.
Steenge, Wiecher D. E., to Shell Internationale Research Maatschappij B.V. Method of solution mining salts from an underground salt deposit. 4,300,801, Cl. 299-5.000.
Steer, Peter L.; and Edwards, John V., to Kingsdown Medical Consultants, Ltd. Ostomy bag having a bottom drain valve. 4,300,560, Cl. 128-283.000.
Steeves, Arthur F.; and Stewart, James C., to United States of America, Energy. Overlapping double etch technique for evaluation of metallic alloys to stress corrosion cracking. 4,300,980, Cl. 156-626.000.
Stein, Reinhardt P., to American Home Products Corporation. Sydnonimine CNS stimulants. 4,301,285, Cl. 544-138.000.
Steinberg, Hy. Vacuum valve and monitoring system. 4,300,601, Cl. 141-94.000.
Steininger, Franz: *See—*
Schmidt, Rudiger; Steininger, Franz; and Hillekamp, Klaus, 4,300,915, Cl. 48-197.00R.
Steinke, Mark H., to Lyon Metal Products, Incorporated. Lift-out gate. 4,300,313, Cl. 49-463.000.
Stephens, Burr E.: *See—*
Hallmann, Melvin H.; and Stephens, Burr E., 4,300,890, Cl. 474-110.000.
Sterling Drug Inc.: *See—*
Thorpe, John G.; and Urben, Peter G., 4,301,283, Cl. 544-92.000.
Sterling Extruder Corp.: *See—*
Andersen, Howard W., 4,300,877, Cl. 425-67.000.
Stern, Walter, to Johns-Manville Corporation. Multiple particle package and method. 4,300,685, Cl. 206-499.000.
Sternberg, Stanley R.; and Lougheed, Robert M., to Environmental Research Institute of Michigan. Bit enable circuitry for an image analyzer system. 4,301,443, Cl. 340-146.3MA.
Sternberger, Klaus: *See—*
Engelhardt, Friedrich; Keil, Karl-Heinz; Weckler, Gerhard; and Sternberger, Klaus, 4,300,903, Cl. 8-531.000.
Steun, Jean-Pierre: *See—*
Desombre, Patrice; and Steun, Jean-Pierre, 4,301,538, Cl. 375-4.000.
Stewart, James C.: *See—*
Steeves, Arthur F.; and Stewart, James C., 4,300,980, Cl. 156-626.000.
Stewart, James R.: *See—*
Frost, Paul E.; and Stewart, James R., 4,300,319, Cl. 52-11.000.
Stewart, Robert B., to Shell Oil Company. Method of cementing wells with foam-containing cement. 4,300,633, Cl. 166-250.000.
Stich, Frederick A., to Siemens-Allis, Inc. Arcless tap changer utilizing static switching. 4,301,489, Cl. 361-9.000.
Stiegler, Karl Heinz: *See—*
Schulze, Ehrhart, 4,300,977, Cl. 156-515.000.
Stindt, Richard E.; and Wright, Thomas C., to Cardiac Pacemakers, Inc. Cardiac pacer circuit. 4,300,566, Cl. 128-419.0PG.
Stinecipher, Mary M.; and Coburn, Michael D., to United States of America, Energy. Ammonium nitrate explosive systems. 4,300,962, Cl. 149-47.000.
Stirling, Irene; and Clarke, Brian P., to Beecham Group Limited. Tetrahydropyridyl derivatives of clavulanic acid, a process for their preparation and their use. 4,301,168, Cl. 424-272.000.
Stone & Webster Engineering Corp.: *See—*
Gartside, Robert J., 4,300,998, Cl. 208-127.000.
Stout, Thomas C., to Trail Equipment Company, Inc. Ski pole shaft. 4,301,201, Cl. 428-36.000.
Straub, Dieter: *See—*
Anschutz, Dieter; and Straub, Dieter, 4,300,302, Cl. 42-73.000.
Straubel, Max; Stumpp, Gerhard; Krieger, Klaus; and Wessel, Wolf, to Robert Bosch GmbH. Apparatus for actuating an adjustment device acting upon a control apparatus for exhaust recirculation in internal combustion engines. 4,300,515, Cl. 123-568.000.
Streetman, William E.; and Daftary, Shashikumar H., to American Cyanamid Company. Process for self-crimping acrylic fiber from a melt of two non-compatible polymers. 4,301,104, Cl. 264-168.000.
Streit, Klaus; Buxmeyer, Walter; Schulzke, Peter; and Harsch, Klaus, to Robert Bosch GmbH. Installation for operating electromagnetic loads in internal combustion engines. 4,300,508, Cl. 123-490.000.
Stringham, Ronald L. Batting aid. 4,300,765, Cl. 273-26.00C.
Strong, Herbert M., to General Electric Company. Novel diamond products and the manufacture thereof. 4,301,134, Cl. 423-446.000.
Strosberg, Arthur M.: *See—*
Kluge, Arthur F.; Strosberg, Arthur M.; Whiting, Roger; and Christie, George A., 4,301,171, Cl. 424-273.00B.
Stroup, Robert C.: *See—*
Nazem, Faramarz; and Stroup, Robert C., 4,301,135, Cl. 423-447.400.
Studiengesellschaft Kohle mbH: *See—*
Bogdanovic, Borislav, 4,301,081, Cl. 260-347.200.
Stuhler, Rolf: *See—*
Majthan, Rudolf; Stuhler, Rolf; Parsonage, Raymond G.; and Packham, Charles C., 4,300,280, Cl. 29-611.000.
Stuivenwold, Paulus A.: *See—*
Knijpers, Petrus J. M.; Stuivenwold, Paulus A.; and van Arkel, Johannes, 4,300,399, Cl. 73-861.040.
Stumpp, Gerhard: *See—*
Straubel, Max; Stumpp, Gerhard; Krieger, Klaus; and Wessel, Wolf, 4,300,515, Cl. 123-568.000.
Sturgeon, Aurora A. Interchangable and reusable handbag kit. 4,300,609, Cl. 150-29.000.
Suenaga, Masahide; Shimizu, Noboru; Kudo, Mitsuhiro; Yamaguchi, Hiroshi; and Mitani, Masao, to Hitachi, Ltd. Method for producing magnetic head. 4,301,353, Cl. 219-121.0LJ.
Sugawara, Tsutomu, to Tokyo Shibaura Denki Kabushiki Kaisha. Frequency characteristic-adjusting apparatus. 4,301,420, Cl. 330-126.000.
Sugaya, Kazuyoshi: *See—*
Isogai, Kiyoshi; and Sugaya, Kazuyoshi, 4,300,519, Cl. 123-647.000.
Sugie, Hiromichi; Akado, Hajime; Yamashita, Akira; and Nakamura, Yasuhiko, to Nippondenso Co., Ltd. Structure for supporting air filter. 4,300,928, Cl. 55-385.00R.
Sugio, Akitoshi; Amemiya, Akira; Kunii, Tadashi; Furusawa, Tomotaka; Takeda, Mutsuhiko; Tanaka, Katsumasa; and Umemura, Toshikazu, to Mitsubishi Gas Chemical Company, Inc. Process for stabilizing oxymethylene copolymers. 4,301,273, Cl. 528-230.000.
Sugiuchi, Toshiyasu; Aoyama, Susumu; and Tokisue, Hiroshi, to Riken Corporation; and M.H. Center Limited, a part interest. Method for producing insert for diesel engine combustion chamber. 4,300,381, Cl. 72-327.000.
Suling, Carlhans; Balle, Gerhard; Leusner, Bernd; Schulz, Hans-Hermann; and Walkowiak, Michael, to Bayer Aktiengesellschaft. Shaped dental articles. 4,300,886, Cl. 433-202.000.
Sullivan, David M. Handcuff assembly. 4,300,368, Cl. 70-16.000.
Sumitomo Chemical Company, Limited: *See—*
Hotta, Seiji; Kawahara, Hitoshi; Hatori, Minoru; and Koseki, Fumio, 4,301,227, Cl. 430-106.000.
Sumitomo Heavy Industries, Ltd.: *See—*
Ibe, Kazuhiko; and Fujita, Kenji, 4,300,257, Cl. 15-93.00A.
Sun Chemical Corporation: *See—*
North, Bernard F., 4,300,898, Cl. 8-185.000.
Sun Coast Plastic Closures, Inc.: *See—*
Santostasi, Paul, 4,300,701, Cl. 220-289.000.
Sun Oil Company of Pennsylvania: *See—*
Hansel, William B.; and Smith, Earl W., 4,300,388, Cl. 73-49.200.
Sundermeyer, Frank D.: *See—*
Modeen, Douglas P.; and Sundermeyer, Frank D., 4,301,469, Cl. 358-75.000.
Surgikos: *See—*
Parker, Duane A., 4,300,549, Cl. 128-206.190.
Sutter, Hans P.; and Hartmann, Josef, to Luwa AG. Apparatus for the pneumatic transport of textile band material. 4,300,711, Cl. 226-97.000.
Sutton, Gary W., to General Signal Corporation. Anti-cavitation and overload relief valve for a hydraulic system. 4,300,591, Cl. 137-493.400.
Suzuki, Akira: *See—*
Otsuki, Keizo; Mochizuki, Hidetoshi; Suzuki, Akira; Adachi, Yoshio; Kosaka, Hideki; and Murakami, Gen, 4,301,464, Cl. 357-70.000.
Suzuki, Akiyoshi; Hiraga, Ryozo; and Yoshinari, Hideki, to Canon Kabushiki Kaisha. Alignment device. 4,301,363, Cl. 250-216.000.
Suzuki, Koji: *See—*
Aoki, Harumi; Miyata, Katsuhiko; and Suzuki, Koji, 4,300,826, Cl. 354-60.00L.
Suzuki, Osamu: *See—*
Oishi, Kengo; and Suzuki, Osamu, 4,300,729, Cl. 242-74.100.
Suzuki, Sadao, to Yoshino Kogyosho Co., Ltd. Orientation-blow molding equipment and jig used therefor. 4,300,880, Cl. 432-138.000.
Suzuki, Shigeru, to Nippon Gakki Seizo Kabushiki Kaisha. Operation mode switching system for tape recorder. 4,301,481, Cl. 360-62.000.
Suzuki, Suzuo, to Nissan Motor Company, Limited. Apparatus for controlling the rotational speed of an I.C. engine in an idling operation. 4,300,501, Cl. 123-339.000.
Suzuki, Yasoji; and Iida, Tetsuya, to Tokyo Shibaura Denki Kabushiki Kaisha. Astable MOS FET multivibrator. 4,301,427, Cl. 331-111.000.
Suzuki, Yoshiaki: *See—*
Nakamura, Kotaro; Suzuki, Yoshiaki; Hara, Hiroshi; Sawada, Satoru; and Oono, Shigeru, 4,301,223, Cl. 430-17.000.
Suzuki, Yuichi; Okada, Masanori; and Henmi, Zenzo, to Fujitsu Limited. Semi-hard magnetic material for a reed switch and process for producing the same. 4,300,958, Cl. 148-120.000.
Swearingen, Judson S. Method and apparatus for controlling clamping forces in fluid flow control assemblies. 4,300,869, Cl. 415-160.000.
Swift, Michael P.: *See—*
Hollis, Nicholas E.; Swift, Michael P.; and Halila, Herbert, 4,300,774, Cl. 277-12.000.
Symons, James D., to General Motors Corporation. Fluid seal. 4,300,777, Cl. 277-153.000.
Syntex (U.S.A.) Inc.: *See—*
Kluge, Arthur F.; Strosberg, Arthur M.; Whiting, Roger; and Christie, George A., 4,301,171, Cl. 424-273.00B.
Szabo, Arthur D., to Westinghouse Electric Corp. Electric motor shipping carton. 4,300,677, Cl. 206-319.000.
Szczepanek, Udo, to Bauer Kompressoren, GmbH. Central guide means for the piston of a reciprocating piston machine. 4,300,405, Cl. 74-44.000.
Sze, Robert C., to United States of America, Energy. XeCl Avalanche discharge laser employing Ar as a diluent. 4,301,425, Cl. 331-94.50G.

Szwarc, Joseph M.: *See—*
Gyure, Sandor; and Szwarc, Joseph M., 4,300,678, Cl. 206-364.000.
Tabb, David L.: *See—*
Rapkin, Myron C.; and Tabb, David L., 4,301,115, Cl. 422-56.000.
Tadmor, Zehev: *See—*
Hold, Peter; and Tadmor, Zehev, 4,300,842, Cl. 366-99.000.
Taguchi, Tadashi; Fujikawa, Noboru; Kohno, Mitsuo; Yoshitake, Katsumi; and Satake, Kunio, to Asahi Kasei Kogyo Kabushiki Kaisha. Oriented polystyrene support for photopolymerizable element. 4,301,230, Cl. 430-273.000.
Taguchi, Tetsu, to Nippon Electric Co., Ltd. Speech analysis and synthesis apparatus. 4,301,329, Cl. 179-1.0SA.
Taguchi, Youichi: *See—*
Kageyama, Kunio; Omote, Shigeo; Taguchi, Youichi; and Yamazaki, Hazime, 4,300,614, Cl. 152-347.000.
Takada, Shigetaka; Kasuya, Kazusato; and Watanabe, Yukihiro, to Aisan Industry Co., Ltd. Air fuel ratio control device. 4,300,505, Cl. 123-445.000.
Takada, Shigetaka: *See—*
Hattori, Tadashi; Takada, Sbigetaka; Hayashi, Kenji; and Iwata, Toshiharu, 4,300,490, Cl. 123-439.000.
Takahashi, Hiroshi: *See—*
Motosugi, Katsuhiko; Takahashi, Hiroshi; Toyoda, Shuhei; and Tanahashi, Toshio, 4,300,500, Cl. 123-308.000.
Takanashi, Hiroyoshi, to Nippon Gakki Seizo Kabushiki Kaisha. Tape speed switching device in cassette tape recorder-player. 4,301,485, Cl. 360-96.500.
Takeda, Mutsuhiko: *See—*
Sugio, Akitoshi; Amemiya, Akira; Kunii, Tadashi; Furusawa, Tomotaka; Takeda, Mutsuhiko; Tanaka, Katsumasa; and Umemura, Toshikazu, 4,301,273, Cl. 528-230.000.
Takeda, Sumiyoshi: *See—*
Hatada, Toshio; Senshu, Takao; Arai, Akira; Harada, Fumio; Matsuzaki, Atsushi; Futawatari, Hajime; Imaizumi, Yutaka; and Takeda, Sumiyoshi, 4,300,629, Cl. 165-151.000.
Takegami, Norio: *See—*
Nozawa, Koji; Takegami, Norio; Mizukoshi, Yukio; and Ikkatai, Mitsuo, 4,300,668, Cl. 192-53.00F.
Takemoto, Iwao; Kubo, Masaharu; Ohba, Shinya; Tanaka, Shuhei; and Aoki, Masakazu, to Hitachi, Ltd.; and Hitachi Denshi Kabushiki Kaisha. Solid-state imaging device. 4,301,477, Cl. 358-213.000.
Takeuchi, Shuhei, to Alps Electric Co., Ltd. Paper feeder device for miniaturized printers. 4,300,712, Cl. 226-157.000.
Takomi, Shizuo; Hashimoto, Toshio; and Akimoto, Fumio, to Nikki-Universal Co., Ltd. High apparent bulk density gamma alumina carrier and method of manufacture of same. 4,301,033, Cl. 252-448.000.
Talres Development (N.A.) N.V.: *See—*
van der Loo, Henricus E.; Wiener, Charles; and Higginbotham, Jnbn D., 4,300,576, Cl. 131-335.000.
Tamura, Masuhiko: *See—*
Yoshimura, Noriaki; and Tamura, Masuhiko, 4,301,083, Cl. 260-404.000.
Tanahashi, Toshio: *See—*
Motosugi, Katsuhiko; Takahashi, Hiroshi; Toyoda, Shuhei; and Tanahashi, Toshio, 4,300,500, Cl. 123-308.000.
Nakanishi, Kiyoshi; Okumura, Takeshi; Deguchi, Ryuichi; and Tanahashi, Toshio, 4,300,499, Cl. 123-307.000.
Tanaka, Katsumasa: *See—*
Sugio, Akitoshi; Amemiya, Akira; Kunii, Tadashi; Furusawa, Tomotaka; Takeda, Mutsuhiko; Tanaka, Katsumasa; and Umemura, Toshikazu, 4,301,273, Cl. 528-230.000.
Tanaka, Koichi; and Amazawa, Kiyoshi, to Nippou Electric Co., Ltd.; and Clarion Co., Ltd. Noise eliminating circuit. 4,301,541, Cl. 455-221.000.
Tanaka, Shigeyoshi: *See—*
Hirayama, Takao; Fujishima, Minoru; Kaneko, Hisasi; and Tanaka, Shigeyoshi, 4,301,048, Cl. 260-22.0CQ.
Tanaka, Shuhei: *See—*
Takemoto, Iwao; Kubo, Masaharu; Ohba, Shinya; Tanaka, Sbuhei; and Aoki, Masakazu, 4,301,477, Cl. 358-213.000.
Tanaka, Tsugio: *See—*
Masuda, Shinichi; Tanaka, Tsugio; Kishi, Nanyuki; and Nagasaka, Yukio, 4,301,050, Cl. 260-28.00R.
Tanei, Tadayoshi; Miyamoto, Minoru; and Ohno, Akio, to Sekisui Kagaku Kogyo Kabushiki Kaisha. Heating unit and method for production thereof. 4,301,356, Cl. 219-213.000.
Taniguchi, Masaaki; Nakata, Shinji; and Ueki, Susumu, to Nissan Motor Company, Limited. Current collecting means in an aerial cableway system. 4,300,666, Cl. 191-23.00A.
Taniguchi, Nobuyuki: *See—*
Kitaura, Mashio; and Taniguchi, Nobuyuki, 4,300,825, Cl. 354-34.000.
Tansson, Bertil E.: *See—*
Carlsson, Karl L.; and Tansson, Bertil E., 4,300,730, Cl. 242-84.20R.
Tanuma, Itsuo: *See—*
Honda, Toshio; Ogawa, Masao; Fukuura, Yukio; Ishikawa, Hikaru; Naito, Kazuo; Akiyama, Setsuo; and Tanuma, Itsuo, 4,300,970, Cl. 156-244.110.
Taschok, John N., to Flynn, James P., a part interest. Auxiliary hot water boiler with solar heater and heat exchange system. 4,300,536, Cl. 126-435.000.
Tatsuno, Kimio: *See—*
Tsunoda, Yoshito; Miyauchi, Toshimitsu; Shigematsu, Kazuo; and Tatsuno, Kimio, 4,301,527, Cl. 369-45.000.
Taubenmann, Peter, to Krauss-Maffei Aktiengesellschaft. Sealing assembly for two relatively movable machine parts. 4,300,776, Cl. 277-124.000.
Taylor, Clifford G.: *See—*
Corfield, John R.; Johnson, Derek; and Taylor, Clifford G., 4,301,280, Cl. 544-016.000.
Taylor, David L., to Harris Corporation. Complementary IGFET buffer with improved bipolar output. 4,301,383, Cl. 307-585.000.
Taylor, Donald E. Eyeglasses for aiding color blind viewers. 4,300,819, Cl. 351-41.000.
Taylor, Donald F., to Sedco, Inc. Automatic dump valve. 4,300,585, Cl. 137-107.000.
Taylor, Francis H. Chair for neurologically impaired patients. 4,300,249, Cl. 4-661.000.
Taylor, Horace E.: *See—*
Bione, Angelo A.; Sehnert, Robert J.; and Taylor, Horace E., 4,300,430, Cl. 84-1.010.
Schreier, Wilford R.; and Taylor, Horace E., 4,300,433, Cl. 84-1.170.
Taylor, Merritt I. Beehives. 4,300,250, Cl. 6-1.000.
Taylor, William A.: *See—*
Emanuelson, Roger C.; Luoma, Warren L.; and Taylor, William A., 4,301,222, Cl. 429-251.000.
Tazaki, Kichiya: *See—*
Yamashita, Izumi; Yoshida, Kazuo; Kusumi, Yuji; Fukuda, Kunio; and Tazaki, Kichiya, 4,301,062, Cl. 260-45.75B.
Technicon Instruments Corp.: *See—*
Negersmith, Kent M., 4,300,906, Cl. 23-230.00A.
Tecl, Bohuslav: *See—*
Fottinger, Walter; Tecl, Bohuslav; and Fahrbach, Erich, 4,300,968, Cl. 156-181.000.
Tektronix, Inc.: *See—*
Barta, Gary S., 4,301,451, Cl. 340-781.000.
Blair, Bruce W., 4,301,360, Cl. 235-92.00T.
Jurgensen, David J.; and Marin, Roger A., 4,301,474, Cl. 358-171.000.
Mason, William M., 4,301,388, Cl. 313-398.000.
Teledyne Industries, Inc.: *See—*
Leri, Dennis A., 4,301,528, Cl. 369-221.000.
Telle, Helmut: *See—*
Schieder, Rudolf; Telle, Helmut; Raue, Roderich; and Brinkwerth, Wolfgang, 4,301,091, Cl. 260-505.00R.
Tengblad, Per F.: *See—*
Wiberger, Lars I.; Ronnow, Peter H.; Tengblad, Per F.; and Hellman, Bert G. H., 4,300,632, Cl. 166-246.000.
Tennessee Valley Authority: *See—*
Hsieh, Shuang-shii, 4,301,003, Cl. 209-166.000.
Terekhin, Vladimir I.: *See—*
Basin, Leonid A.; Valkov, Alexei A.; Panin, Vladimir I.; and Terekhin, Vladimir I., 4,301,365, Cl. 250-308.000.
Terelak, Kazimierz: *See—*
Kiedik, Maciej; Kolt, Jozef; Czyz, Jerzy; Grzywa, Edward; Niezgoda, Anna; and Terelak, Kazimierz, 4,301,305, Cl. 568-727.000.
Terrill, David B.: *See—*
Shaw, Wilfrid G.; and Terrill, David B., 4,301,038, Cl. 252-468.000.
Terry, F. Duncan: *See—*
Haag, George A.; Fogg, O. Douglas; Greenley, Gordon A.; Shepard, Steve A.; and Terry, F. Duncan, 4,301,513, Cl. 364-900.000.
Testa, Carlo: *See—*
Nava, Pier L.; Testa, Carlo; and Frigerio, Davide, 4;300,242, Cl. 2-412.000.
Tetenborg, Kourad; and Oelrich, Hermann, to Windmoller & Holscher. Method and apparatus for filling sacks with an amount of pourable material determined by their weight. 4,300,600, Cl. 141-10.000.
Tetirick, Jack E. Solar heat control apparatus for a body of water. 4,300,530, Cl. 126-415.000.
Tevco Inc.: *See—*
Schlossman, Mitchell L., 4,301,046, Cl. 260-16.000.
Tevelow, Frank L., to United States of America, Army. Soft recovery method for gunfired shells. 4,300,389, Cl. 73-167.000.
Texaco Inc.: *See—*
Cuscurida, Michael; Dominguez, Richard J. G.; and Rice, Doris M., 4,301,110, Cl. 264-328.140.
Paap, Hans J., 4,301,400, Cl. 324-58.50A.
Texas Instruments Deutschland: *See—*
Pagany, Volker, 4,301,470, Cl. 358-101.000.
Texas Instruments, Inc.: *See—*
Brown, Sheldon H.; Autery, William D.; Rittman, Alan H.; and Chapman, Nelson H., 4,301,486, Cl. 360-99.000.
Cao, Cbung Van; and Ward, Phillip W., 4,300,653, Cl. 181-107.000.
Klaas, Jeffrey M., 4,301,518, Cl. 365-185.000.
Tokuda, Ryuji; and Andresen, Bernhard H., 4,300,824, Cl. 354-25.000.
Tezuka, Etsuhiro, to Yamaha Hatsudoki Kabushiki Kaisha. Internal combustion engine. 4,300,504, Cl. 123-432.000.
TGS Systems, Inc.: *See—*
Rhonehouse, Donald E., 4,300,937, Cl. 65-114.000.
TH. Goldschmidt AG: *See—*
Kropac, Vaclav, 4,301,268, Cl. 528-26.000.
Thelander, Henry. Device for releasably connecting a furniture leg with a piece of furniture, for example a table. 4,300,851, Cl. 403-319.000.
Thermal Imagery, Inc.: *See—*
Buirley, William L.; Koopman, Donald E.; McQuain, David B.; and Reeves, William H., 4,301,054, Cl. 260-29.4UA.

Thermo Electron Corporation: *See—*
Rounbehler, David P.; and Reisch, John W., 4,301,114, Cl. 422-52.000.
Thiele, Gerald H.; Freiberg, Ashley H.; Skiles, Robert L.; and King, David L., to Stauffer Chemical Company. Synergistic herbicidal compositions. 4,300,945, Cl. 71-95.000.
Thies, Helmut: *See—*
Berger, Bernd; Mucke, Gert; Thies, Helmut; Neuschutz, Eberhard; and Oppermann, Heinz, 4,300,403, Cl. 73-862.070.
Thiokol Corporation: *See—*
Wade, Robert C.; and Hui, Benjamin C., 4,301,129, Cl. 423-284.000.
Thiruvarudchelvan, Sinnathamby. Method and apparatus for forming elongated articles having reduced diameter cross-sections. 4,300,378, Cl. 72-253.100.
Thomas, Alan J.: *See—*
Paddison, Eric, deceased; Fordham, Roger G.; and Thomas, Alan J., 4,301,408, Cl. 324-141.000.
Thomas, Donald D., to PPG Industries, Inc. Method of manufacturing automotive windows by coating a scored substrate. 4,300,933, Cl. 65-60.100.
Thomas, James S., to Motorola, Inc. Voltage detector. 4,301,380, Cl. 307-362.000.
Thomas, Robert E., to Securax, Inc. Security display rack. 4,300,690, Cl. 211-4.000.
Thompson, H. Truett. Scaffold. 4,300,657, Cl. 182-38.000.
Thompson, Raymon F. Centrifugal wafer processor. 4,300,581, Cl. 134-57.00R.
Thomson-CSF: *See—*
Guyot, Joel; and Vernet, Jean-Louis, 4,301,522, Cl. 367-123.000.
Jacquet, Raymond, 4,301,502, Cl. 363-79.000.
Puyhaubert, Jean; and Jacquemin, Claude, 4,301,431, Cl. 333-141.000.
Thorpe, John G.; and Urben, Peter G., to Sterling Drug Inc. Process for preparing 2-oxo-dihydrobenzo(d)(1,3)-oxazines. 4,301,283, Cl. 544-92.000.
Thorsen, Walter J., to United States of America, Agriculture. Apparatus for treatment of fibers with ozone-steam mixtures. 4,300,367, Cl. 68-5.00D.
Thuries, Edmond; Delcoustal, Jean-Marie; and Pascal, Jacques, to Delle-Alsthom. Stabilizer for stabilizing the gas pressure in an air blast circuit breaker. 4,300,586, Cl. 137-110.000.
Tibbetts, Samuel H.: *See—*
Brown, Peter S.; and Tibbetts, Samuel H., 4,300,872, Cl. 417-360.000.
Tibbs, Larry T. Cutting tool. 4,300,287, Cl. 30-289.000.
Tiggesbaumker, Peter: *See—*
Goldmann, Wolf; Michaelsen, Dieter; Dreyer, Dieter; Holsiepe, Dietmar; Tiggesbaumker, Peter; Bauer, Klaus; Durr, Manfred; and Mersmann, Heinz O., 4,300,879, Cl. 432-14.000.
Tikhomirov, Vladimir A.: *See—*
Nikandrov, Gennady A.; Alovyainikov, Alexandr A.; Varlamova, Ljudmila V.; Vulikh, Alexandr I.; Lopatin, Jury P.; Tikhomirov, Vladimir A.; Chebukhanova, Vera A.; Preobrazhensky, Pavel S.; Spiridonov, Viktor E.; Zhelonkin, Alexandr G.; and Varlamov, Rudolf P., 4,300,925, Cl. 55-242.000.
Tilley, Jefferson W.: *See—*
Fahrenholtz, Kenneth E.; Guthrie, Robert W.; Kierstead, Richard W.; and Tilley, Jefferson W., 4,301,300, Cl. 564-92.000.
Timex Corporation: *See—*
Wilson, Robert, 4,300,621, Cl. 164-485.000.
Timmins, Cyril: *See—*
Davies, Haydn S.; Garstang, James H.; and Timmins, Cyril, 4,300,999, Cl. 208-212.000.
Tinkham, Sherman L. Fuel system. 4,300,482, Cl. 123-23.000.
Titus, Theodore, IV: *See—*
Mohammadioun, Said; Wittler, David A.; Titus, Theodore, IV; and Plunkett, Luther C., Jr., 4,301,525, Cl. 369-29.000.
TLV Co., Ltd.: *See—*
Fujiwara, Katsuji; Miyata, Osamu; and Oike, Tadashi, 4,300,588, Cl. 137-185.000.
Tokico Ltd.: *See—*
Kubota, Hitoshi; Hayashida, Yoshihiro; and Kutsuma, Hironori, 4,301,440, Cl. 340-59.000.
Tokisue, Hiroshi: *See—*
Sugiuchi, Toshiyasu; Aoyama, Susumu; and Tokisue, Hiroshi, 4,300,381, Cl. 72-327.000.
Tokuda, Ryuji; and Andresen, Bernhard H., to Canon Inc.; and Texas Instruments Incorporated. Signal processing circuitry for a distance measuring system. 4,300,824, Cl. 354-25.000.
Tokyo Print Co., Ltd.: *See—*
Arai, Minoru; and Baba, Akio, 4,301,189, Cl. 427-96.000.
Tokyo Shibaura Denki Kabushiki Kaisha: *See—*
Kameyama, Syuichi, 4,301,382, Cl. 307-477.000.
Seki, Nagataka; and Tsuruta, Yukinori, 4,301,500, Cl. 363-58.000.
Shirouzu, Shunji; and Noda, Ryuzo, 4,300,395, Cl. 73-708.000.
Sugawara, Tsutomu, 4,301,420, Cl. 330-126.000.
Suzuki, Yasoji; and Iida, Tetsuya, 4,301,427, Cl. 331-111.000.
Tomiita, Kazuo: *See—*
Kasai, Isamu; Tomiita, Kazuo; and Inuyama, Hisao, 4,300,345, Cl. 57-290.000.
Tomy Kogyo Co., Inc.: *See—*
Ikeda, Masaki, 4,300,308, Cl. 46-206.000.
Toray Industries, Incorporated: *See—*
Atarashi, Yuji; and Kataoka, Mutsuo, 4,301,231, Cl. 430-287.000.
Kasai, Isamu; Tomiita, Kazuo; and Inuyama, Hisao, 4,300,345, Cl. 57-290.000.
Ohno, Kiyotaka; Nishiyama, Hisao; and Nishio, Shintaro, 4,301,164, Cl. 424-263.000.
Yamamoto, Ryuichi; and Watanabe, Shizuo, 4,301,136, Cl. 423-447.800.
Torbus, Marek; and Vujevic, Aleksandar, to Huttenes-Albertus Chemische Werke GmbH. Polyurethane-based binder, as well as the production thereof. 4,301,271, Cl. 528-85.000.
Torossian, Dieran R.; Roux, Claude P.; and Aubard, Gilbert G., to Societe Industrielle de Produits de Synthese. Amino-ether oxides and use thereof in therapy. 4,301;163, Cl. 424-263.000.
Torre, Jean-Pierre: *See—*
Chanin, Gerald; and Torre, Jean-Pierre, 4,300,360, Cl. 62-514.00R.
Toshiba Silicone Co., Ltd.: *See—*
Hashimoto, Mitsuyoshi; Hosokawa, Kiyoshi; and Motegi, Tsuneo, 4,301,269, Cl. 528-34.000.
Tnwnsend, David J., to Union Carbide Corporation. Synthetic fuel containing methanol and butanol. 4,300,912, Cl. 44-56.000.
Toyo Boseki Kabushiki Kaisha: *See—*
Kikuchi, Toshiro; and Ando, Makoto, 4,301,244, Cl. 435-4.000.
Toyo Engineering Corporation: *See—*
Inoue, Shigeru; and Ono, Hiroshi, 4,301,299, Cl. 564-67.000.
Toyo Ink Mfg. Ltd.: *See—*
Funatsu, Takenori; Maejima, Masuhiko; Inuzuka, Yoichi; and Tsuji, Kosaku, 4,301,049, Cl. 260-23.0AR.
Toyoda Koki Kabushiki Kaisha: *See—*
Nomura, Kenji; Tsuboi, Akira; and Nakashima, Kunimichi, 4,300,278, Cl. 29-568.000.
Toyoda, Sbuhei: *See—*
Mntosugi, Katsuhiko; Takahashi, Hiroshi; Toyoda, Shuhei; and Tanahashi, Toshio, 4,300,500, Cl. 123-308.000.
Toyota Jidosha Kogyo Kabushiki Kaisha: *See—*
Isogai, Kiyoshi; and Sugaya, Kazuyoshi, 4,300,519, Cl. 123-647.000.
Motosugi, Katsuhiko; Takahashi, Hiroshi; Toyoda, Shuhei; and Tanahashi, Toshio, 4,300,300, Cl. 123-308.000.
Nakanishi, Kiyoshi; Okumura, Takeshi; Deguchi, Ryuicbi; and Tanahashi, Toshio, 4,300,499, Cl. 123-307.000.
Okano, Hiroshi; and Hirano, Masayoshi, 4,300,387, Cl. 73-460.000.
Toyota, Masahiro: *See—*
Yano, Tadashi; Maruyama, Yoshiaki; and Toyota, Masahiro, 4,300,421, Cl. 83-99.000.
Tracor, Inc.: *See—*
Sallee, Bradley T., 4,300,451, Cl. 102-223.000.
Trail Equipment Company, Inc.: *See—*
Stout, Thomas C., 4,301,201, Cl. 428-36.000.
Tranter, Inc.: *See—*
Grove, Edward E., 4,300,920, Cl. 55-84.000.
Tre Corporation: *See—*
Mullich, Richard O.; and Hunter, William R., 4,300,374, Cl. 70-389.000.
Tredair Industries, Inc.: *See—*
Richards, James F., 4,300,841, Cl. 366-98.000.
Tremblay, Michael A.: *See—*
Hetzel, Henry T.; and Tremblay, Michael A., 4,301,326, Cl. 178-18.000.
Trevino, Carlos S.; and Trevino, Isidro S. Car theft preventer. 4,300,495, Cl. 123-198.00B.
Trevino, Isidro S.: *See—*
Trevino, Carlos S.; and Trevino, Isidro S., 4,300,495, Cl. 123-198.00B.
Trevithick, Richard W. Programmable multi-channel audio playback system for reel-to-reel tapes. 4,301,482, Cl. 360-72.100.
Triulzi, Joseph P., to Triulzi Rotary, Inc. Rotary engine. 4,300,487, Cl. 123-44.00C.
Triulzi Rotary, Inc.: *See—*
Triulzi, Joseph P., 4,300,487, Cl. 123-44.00C.
Trojani, Benito L. Finned metal tube and method for making the same. 4,300,630, Cl. 165-181.000.
Truck Safety Systems, Inc.: *See—*
Mettetal, Bert J., 4,300,785, Cl. 280-432.000.
Trump, Bruce, to Zenith Radio Corporation. Loudspeaker protection circuit. 4,301,330, Cl. 179-1.00A.
Trusczcinski, Helmut: *See—*
Von Viebahn, Hans-Eckart; and Trusczcinski, Helmut, 4,300,673, Cl. 198-611.000.
TRW Inc.: *See—*
Fisher, Charles K.; and Arias, Pierre E., 4,300,866, Cl. 411-155.000.
Murray, Ronald A., 4,300,865, Cl. 411-15.000.
Tseung, Alfred C. C.; and Jasem, Sameer M. Gas extraction. 4,300,987, Cl. 204-129.000.
Tsuboi, Akira: *See—*
Nomura, Kenji; Tsnboi, Akira; and Nakashima, Kunimichi, 4,300,278, Cl. 29-568.000.
Tsuboi, Shigeo. Thread-tension regulating device for multi-thread sewing machine. 4,300,465, Cl. 112-255.000.
Tsuji, Kosaku: *See—*
Funatsu, Takenori; Maejima, Masuhiko; Inuzuka, Yoichi; and Tsuji, Kosaku, 4,301,049, Cl. 260-23.0AR.
Tsunekawa, Tokuicbi: *See—*
Sakane, Toshio; Hosoe, Kazuya; Kinoshita, Takao; Tsunekawa, Tokuichi; and Kawabata, Takashi, 4,301,478, Cl. 358-227.000.
Tsunoda, Yoshito; Miyauchi, Toshimitsu; Shigematsu, Kazuo; and Tatsuno, Kimio, to Hitachi, Ltd. Optical head for a videodisc recorder/player. 4,301,527, Cl. 369-45.000.
Tsuruta, Yukinori: *See—*
Seki, Nagataka; and Tsuruta, Yokinori, 4,301,500, Cl. 363-58.000.

Tu, Shu T.: *See—*
Lorenz, Donald H.; Tu, Shu T.; and Wyman, Donald P., 4,301,209, Cl. 428-339.000.
Tummala, Rao R.: *See—*
Kumar, Ananda H.; McMillan, Peter W.; and Tummala, Rao R., 4,301,324, Cl. 174-68.500.
Turco, Daniel J. Auto routing computer for eliminating the need for maps or travel instructions. 4,301,506, Cl. 364-436.000.
Turner Quick-Lift Corporation: *See—*
Vandenberg, Ervin K., 4,300,787, Cl. 280-704.000.
Tyabin, Nikolai V.: *See—*
Mikhailov, Gerold M.; Tyabin, Nikolai V.; Khvorostukhin, Vladimir A.; Zakharov, Valery V.; and Nikolaev, Vitaly N., 4,300,625, Cl. 165-95.000.
UBE Industries, Ltd.: *See—*
Fukui, Kiyoshi; and Kakeya, Noboru, 4,301,301, Cl. 568-17.000.
Uber, Arthur E., III: *See—*
Beck, Vernon D.; Piggin, Bruce P.; and Uber, Arthur E., III, 4,301,389, Cl. 313-411.000.
Uchiyama, Hirofumi: *See—*
Hayashi, Masayuki; Ifuku, Yasushi; Uchiyama, Hirofumi; Kaga, Yosimi; and Nakamori, Akifumi, 4,300,448, Cl. 99-516.000.
Ueba, Hisaaki: *See—*
Nakamura, Masaaki; and Ueba, Hisaaki, 4,300,343, Cl. 57-251.000.
Ueda, Fumiya: *See—*
Ochi, Shuhei; Ueda, Fumiya; Morihara, Nobuyuki; Namba, Hiroshi; Nishino, Motohisa; and Yamamoto, Shigeo, 4,300,556, Cl. 128-256.000.
Ueda, Minoru, to Yoshida Kogyo K.K. Apparatus for manufacturing slide fasteners. 4,300,283, Cl. 29-766.000.
Ueki, Susumu: *See—*
Taniguchi, Masaaki; Nakata, Shinji; and Ueki, Susumu, 4,300,666, Cl. 191-23.00A.
Uhde GmbH: *See—*
Hater, Martin; Meininghaus, Fritz; and Scheel, Rudiger, 4,300,939, Cl. 71-25.000.
Uhlemann-Jucker, Christina U., heir: *See—*
Jucker, Jules, deceased; Jucker-Raths, Hedwig A., heir; Benz-Jucker, Edith H., heir; Jucker, Erich J., heir; and Uhlemann-Jucker, Christina U., heir, 4,301,335, Cl. 179-84.00L.
Uhlig, Fritz, to Hoechst Aktiengesellschaft. Process for the preparation of relief-type recordings using diazonium condensation product and amine resin as light-sensitive recording layer and incoherent radiation source for recording image. 4,301,234, Cl. 430-325.000.
Ulrich, Jorn, to B.A.T. Cigaretten-Fabriken GmbH. Process for the manufacture of a tobacco rib cut having an improved filling capacity. 4,300,579, Cl. 131-290.000.
Umemura, Toshikazu: *See—*
Sugio, Akitoshi; Amemiya, Akira; Kunii, Tadashi; Furusawa, Tomotaka; Takeda, Mutsuhiko; Tanaka, Katsumasa; and Umemura, Toshikazu, 4,301,273, Cl. 528-230.000.
Underwood, William S.; and Bohm, Louis, to Kestrel Chemicals Limited. Polyvinyl chloride containing a filler. 4,301,060, Cl. 260-42.490.
Unger, Thomas E.: *See—*
Plichta, George J.; and Unger, Thomas E., 4,301,192, Cl. 427-97.000.
Uni-Cardan AG: *See—*
Krude, Wernez, 4,300,651, Cl. 180-256.000.
Union Carbide Corporation: *See—*
Evans, William P.; and Leger, Violeta Z., 4,301,220, Cl. 429-197.000.
Nazem, Faramarz; and Stroup, Robert C., 4,301,135, Cl. 423-447.400.
Notaro, Frank; Acharya, Arun; and Kather, Kenneth C., 4,300,356, Cl. 62-50.000.
Sowa, Michael W., 4,301,063, Cl. 260-45.85S.
Townsend, David J., 4,300,912, Cl. 44-56.000.
Warren, Barbara K., 4,301,253, Cl. 518-700.000.
United Kingdom Atomic Energy Authority: *See—*
Kennedy, Peter, 4,301,132, Cl. 423-345.000.
United Kingdom of Great Britain and Northern Ireland, The Secretary of State for Energy in Her Britannic Majesty's Government of the: *See—*
Clark, Peter J., 4,300,852, Cl. 403-385.000.
United States of America
Agriculture: *See—*
Blanchard, Eugene J.; 4,300,904, Cl. 8-532.000.
Harnly, James M.; O'Haver, Thomas C.; Wolf, Wayne R.; and Golden, Bruce M., 4,300,833, Cl. 356-307.000.
Thorsen, Walter J., 4,300,367, Cl. 68-5.00D.
Wilkins, Dale E.; and Conley, William J., 4,300,462, Cl. 111-34.000.
America: *See—*
Yetter, Forrest G., 4,301,455, Cl. 343-106.00D.
Army: *See—*
Burke, John F., 4,300,596, Cl. 137-836.000.
Calomiris, Thomas J., 4,301,419, Cl. 330-107.000.
Gutleber, Frank S., 4,301,530, Cl. 370-18.000.
Hafner, Erich; and Ney, Robert J., 4,300,272, Cl. 29-25.350.
Jellinek, Hans H. G.; Frankenstein, Guenther E.; and Hanamoto, Ben, 4,301,208, Cl. 428-334.000.
Levinson, Samuel, 4,301,499, Cl. 363-26.000.
Tevelow, Frank L., 4,300,389, Cl. 73-167.000.
Energy: *See—*
Feder, Harold M.; and Chen, Michael J., 4,301,312, Cl. 568-902.000.
Loo, Billy W., 4,301,002, Cl. 209-143.000.
Rice, Louis F., 4,300,914, Cl. 48-76.000.
Steeves, Arthur F.; and Stewart, James C., 4,300,980, Cl. 156-626.000.
Stinecipher, Mary M.; and Coburn, Michael D., 4,300,962, Cl. 149-47.000.
Sze, Robert C., 4,301,425, Cl. 331-94.50G.
Health and Human Services: *See—*
Refojo, Miguel F.; and Liu, Hsaio S., 4,300,557, Cl. 128-260.000.
Interior: *See—*
Atkinson, Gary B.; Nicks, Larry J.; and Bauer, Donald J., 4,301,032, Cl. 252-443.000.
Sainato, Albert; Cervik, Joseph; and Prosser, Leonard J., Jr., 4,300,631, Cl. 166-187.000.
National Aeronautics and Space Administration: *See—*
Burcham, Frank W., 4,300,656, Cl. 181-214.000.
Prasthofer, Willibald P., 4,300,723, Cl. 239-499.000.
Navy: *See—*
Catano, Paul S.; and McDonald, Malvyn C., 4,300,468, Cl. 114-340.000.
Chang, Ching T., 4,300,930, Cl. 65-3.110.
Gordon, Daniel I.; Schwee, Leonard J.; and Anderson, Wallace E., 4,301,418, Cl. 330-62.000.
Meland, Clifford L.; and Booth, Newell O., 4,301,523, Cl. 367-123.000.
Schneider, Irwin, 4,301,426, Cl. 331-94.50F.
U.S. Philips Corporation: *See—*
Boonstra, Alexander H.; and Mutsaers, Cornelis A. H. A., 4,301,042, Cl. 252-521.000.
Broeksema, Egbert; and Smeets, Arnoldus A., 4,301,099, Cl. 264-25.000.
Peek, Hermanus L., 4,301,191, Cl. 427-88.000.
Veldkamp, Jan D. B., 4,300,417, Cl. 82-1.00C.
U.S. Precision Lens Incorporated: *See—*
Betensky, Ellis I., 4,300,817, Cl. 350-412.000.
United States Surgical Corporation: *See—*
Hill, Jeremy R.; and Meyer, Allen E., 4,301,412, Cl. 324-442.000.
Hill, Jeremy R.; and Meyer, Allen E., 4,301,414, Cl. 324-446.000.
United Technologies Corporation: *See—*
Degnan, William G.; and Selleck, Robert A., 4,300,439, Cl. 92-146.000.
Emanuelson, Roger C.; Luoma, Warren L.; and Taylor, William A., 4,301,222, Cl. 429-251.000.
Hurwitz, Peter A.; and Loersch, Joseph F., 4,300,959, Cl. 148-127.000.
Modeen, Douglas P.; and Sundermeyer, Frank D., 4,301,469, Cl. 358-75.000.
Snitzer, Elias; and Meltz, Gerald, 4,300,816, Cl. 350-96.330.
University of Nebraska, The Board of Regents of the: *See—*
Galbraith, David W., 4,300,310, Cl. 47-58.000.
University of Rochester: *See—*
Mourou, Gerard, 4,301,362, Cl. 250-211.00J.
University Patents, Inc.: *See—*
Basu, Samarnath; and Worrell, Wayne L., 4,301,221, Cl. 429-218.000.
Uphoff, John W., to Brunswick Corporation. Composition and process for delustering plastisol films. 4,301,103, Cl. 264-166.000.
Upjohn Company, The: *See—*
Nelson, Norman A., 4,301,294, Cl. 560-53.000.
Sih, John C., 4,301,079, Cl. 260-346.220.
Smith, Herman W., 4,301,078, Cl. 260-346.220.
Yalkowsky, Samuel H., 4,301,175, Cl. 424-305.000.
Urbanic, Robert F., to PMC Industries, Inc. Centering and self-adjusting chuck. 4,300,780, Cl. 279-1.00L.
Urben, Peter G.: *See—*
Thorpe, John G.; and Urben, Peter G., 4,301,283, Cl. 544-92.000.
Uroshevich, Miroslav, to Alpha Solarco Inc. Solar energy receivers. 4,300,538, Cl. 126-438.000.
Ushakov, Konstantin I.; Khilko, Mikhail E.; Felman, Rina I.; Sadykov, Vasily I.; Kalnin, Evgeny I.; and Kovgan, Pavel A. Method for treating sulfide raw materials. 4,300,949, Cl. 75-73.000.
Uskokovic, Milan R.: *See—*
Despreaux, Carl; Narwid, Thomas A.; Palleroni, Norberto J.; and Uskokovic, Milan R., 4,301,246, Cl. 435-58.000.
USM Corporation: *See—*
Hold, Peter; and Tadmor, Zehev, 4,300,842, Cl. 366-99.000.
Vadas, Leslie, to FMC Corporation. No pouch - no fill apparatus with memory system. 4,300,602, Cl. 141-103.000.
Vadas, Robert M.; and Shaver, Marvin B., to Dominion Engineering Works Limited. Heated mill drive system. 4,300,292, Cl. 34-108.000.
Vahlensieck, Hans-Joachim: *See—*
Blumcke, Alfred; Fischer, Peter; and Vahlensieck, Hans-Joachim, 4,301,027, Cl. 252-408.000.
Valeron Corporation, The: *See—*
Keith, Everette R.; Cook, Kenneth J.; Power, Joseph S.; and Ruszala, Frederick B., 4,301,512, Cl. 364-801.000.
Valka, William A., to Armco Inc. Tool for remotely determining the position of a device in an underwater well assembly. 4,300,637, Cl. 166-336.000.
Valka, William A.; and Porter, Steven A., to Armco Inc. Position indicating valves. 4,300,750, Cl. 251-323.000.
Valkov, Alexei A.: *See—*
Basin, Leonid A.; Valkov, Alexei A.; Panin, Vladimir I.; and Terekhin, Vladimir I., 4,301,365, Cl. 250-308.000.

van Arkel, Johannes: *See—*
Kuijpers, Petrus J. M.; Stuivenwold, Paulus A.; and van Arkel, Johannes, 4,300,399, Cl. 73-861.040.
Vandenberg, Ervin K., to Turner Quick-Lift Corporation. Lift axle suspension. 4,300,787, Cl. 280-704.000.
van den Haak, Rob. Anchor. 4,300,467, Cl. 114-303.000.
Vander Beke, Robert M.: *See—*
Santens, Lieven J. M. E.; and Vander Beke, Robert M., 4,300,251, Cl. 8-149.100.
van der Lely, Ary; and Bom, Cornelis J. G., to C. van der Lely N.V. Overload couplings. 4,300,364, Cl. 64-28.00R.
van der Lely, Cornelis. Soil cultivating machines. 4,300,639, Cl. 172-49.500.
van der Loo, Henricus E.; Wiener, Charles; and Higginbotham, John D., to Talres Development (N.A.) N.V. Smoking articles containing thaumatin or monellin. 4,300,576, Cl. 131-335.000.
Van Duzee, Grant T.: *See—*
Kightlinger, Adrian P.; Speakman, Edwin L.; and Van Duzee, Grant T., 4,301,017, Cl. 252-8.600.
Van Otterdyk, Frans: *See—*
Borja, Arthur; and Van Otterdyk, Frans, 4,301,194, Cl. 427-154.000.
Van Zeeland, Donald L.: *See—*
Anderson, John A.; Born, Richard C.; Knopf, Frank A.; Sabroff, Richard R.; Schutten, Herman P.; and Van Zeeland, Donald L., 4,301,508, Cl. 364-483.000.
Varlamov, Rudolf P.: *See—*
Nikandrov, Gennady A.; Alovyainikov, Alexandr A.; Varlamova, Ljudmila V.; Vulikh, Alexandr I.; Lopatin, Jury P.; Tikhomirov, Vladimir A.; Chebukhanova, Vera A.; Preobrazhensky, Pavel S.; Spiridonov, Viktor E.; Zhelonkin, Alexandr G.; and Varlamov, Rudolf P., 4,300,925, Cl. 55-242.000.
Varlamova, Ljudmila V.: *See—*
Nikandrov, Gennady A.; Alovyainikov, Alexandr A.; Varlamova, Ljudmila V.; Vulikh, Alexandr I.; Lopatin, Jury P.; Tikhomirov, Vladimir A.; Chebukhanova, Vera A.; Preobrazhensky, Pavel S.; Spiridonov, Viktor E.; Zhelonkin, Alexandr G.; and Varlamov, Rudolf P., 4,300,925, Cl. 55-242.000.
Vartiak, Joseph F., to Nalco Chemical Company. Method of using admixture of water-soluble polymers in latex form and gypsum as seepage control agents. 4,300,861, Cl. 405-264.000.
Vasalos, Iacovos A.: *See—*
Meguerian, Garbis H.; Lorntson, John M.; and Vasalos, Iacovos A., 4,300,997, Cl. 208-120.000.
Veber, Daniel F.; and Freidinger, Roger M., to Merck & Co., Inc. Long-lasting agonists of enkephalin. 4,301,151, Cl. 424-177.000.
Veldkamp, Jan D. B., to U.S. Philips Corporation. Method and device for machining glass and vitreous material as well as work-piece of glass or vitreous material machined according to the method. 4,300,417, Cl. 82-1.00C.
Venot, Jean, to ASA S.A. Yarn heating device. 4,301,358, Cl. 219-388.000.
Vernet, Jean-Louis: *See—*
Guyot, Joel; and Vernet, Jean-Louis, 4,301,522, Cl. 367-123.000.
Viallet, Marie-Pierre D.: *See—*
Boucherle, Andre L.; and Viallet, Marie-Pierre D., 4,301,167, Cl. 424-270.000.
Victor Company of Japan, Limited: *See—*
Kitamura, Masatsugu, 4,301,480, Cl. 360-8.000.
Sawaguchi, Masahiro; Sasaki, Masami; Hosoya, Hiroshi; and Oka, Toshiichiro, 4,301,484, Cl. 360-96.600.
Yoshiba, Shigeru, 4,300,331, Cl. 53-573.000.
Vinals, Joaquin F.: *See—*
Sprecker, Mark A.; Schmitt, Frederick L.; Vock, Manfred H.; Vinals, Joaquin F.; and Kiwala, Jacob, 4,301,018, Cl. 252-8.600.
Sprecker, Mark A.; Schmitt, Frederick L.; Vock, Manfred H.; Vinals, Joaquin F.; and Kiwala, Jacob, 4,301,022, Cl. 252-174.110.
Sprecker, Mark A.; Schmitt, Frederick L.; Vock, Manfred H.; Vinals, Joaquin F.; and Kiwala, Jacob, 4,301,024, Cl. 252-301.310.
Sprecker, Mark A.; Sanders, James M.; Schreiber, William L.; Watkins, Hugh; Vinals, Joaquin F.; Shuster, Edward J.; O'Rourke, Thomas J.; Hagedorn, Myrna L.; and Kiemarczyk, Philip, 4,301,302, Cl. 568-373.000.
Sprecker, Mark A.; Schmitt, Frederick L.; Vock, Manfred H.; Vinals, Joaquin F.; and Kiwala, Jacob, 4,301,309, Cl. 568-826.000.
Vinoxen Company, The: *See—*
Revici, Emanuel, 4,301,150, Cl. 424-128.000.
Viri, Donald P.: *See—*
Kimbrough, Andrew G.; Rothermel, Ronald R.; and Viri, Donald P., 4,301,355, Cl. 219-137.0PS.
Vision Metal Fabricators Corporation: *See—*
Simmons, Robert, 4,300,722, Cl. 238-14.000.
Vital Industries, Inc.: *See—*
McCoy, Reginald F. H., 4,301,475, Cl. 358-181.000.
Vock, Manfred H.: *See—*
Sprecker, Mark A.; Schmitt, Frederick L.; Vock, Manfred H.; Vinals, Joaquin F.; and Kiwala, Jacob, 4,301,018, Cl. 252-8.600.
Sprecker, Mark A.; Schmitt, Frederick L.; Vock, Manfred H.; Vinals, Joaquin F.; and Kiwala, Jacob, 4,301,022, Cl. 252-174.110.
Sprecker, Mark A.; Schmitt, Frederick L.; Vock, Manfred H.; Vinals, Joaquin F.; and Kiwala, Jacob, 4,301,024, Cl. 252-301.310.
Sprecker, Mark A.; Schmitt, Frederick L.; Vock, Manfred H.; Vinals, Joaquin F.; and Kiwala, Jacob, 4,301,309, Cl. 568-826.000.
Wiegers, Wilhelmus J.; Sprecker, Mark A.; Watkins, Hugh; Vock, Manfred H.; and Schmitt, Frederick L., 4,301,076, Cl. 260-345.200.
Voelkl, Erfried: *See—*
Duembgen, Gerd; Voelkl, Erfried; and Pforr, Gerhard, 4,301,126, Cl. 423-240.000.
Voest-Alpine Aktiengesellschaft: *See—*
Scheurecker, Werner, 4,300,619, Cl. 164-448.000.
Vogel, Eva M.: *See—*
Johnson, David W., Jr.; and Vogel, Eva M., 4,301,020, Cl. 252-62.620.
Voith Transmit GmbH: *See—*
Lindenthal, Hans; Armasow, Waldemar; and Bretzger, Reinhard, 4,300,361, Cl. 64-17.00R.
Vonderau, Josef: *See—*
Seltenheim, Volker; Schubert, August; Paschakarnis, Peter; Vonderau, Josef; Ilzig, Frank; Frosch, Walter; and Fuglein, Egon, 4,301,205, Cl. 428-127.000.
von Fraunberg, Karl: *See—*
Hoffmann, Werner; von Fraunberg, Karl; and Baumann, Manfred, 4,301,303, Cl. 568-375.000.
Von Kohorn, Henry. Method for leaching metal bearing ores. 4,301,121, Cl. 423-1.000.
Von Viebahn, Hans-Eckart; and Trusczcinski, Helmut, to Gewerkschaft Eisenhutte Westfalia. Apparatus for transferring material between conveyors. 4,300,673, Cl. 198-611.000.
Voorhes, William G.: *See—*
Johnson, Morris E.; Voorhes, William G.; and Breneiser, Dennis L., 4,300,379, Cl. 72-258.000.
Vorozheikin, Anatoly A.: *See—*
Mitin, Leonid A.; Fadeev, Petr Y.; Ponomarev, Leonid F.; Fadeev, Vladimir Y.; Rybert, Vyacheslav F.; Reutsky, Jury V.; Kulagin, Rim A.; Vorozheikin, Anatoly A.; Ermilov, Nikolai P.; Dimova, Lidia P.; Doskaziev, Adil G.; Korobkov, Vladlen V.; Babenko, Sergei A.; Akhmatov, Mikhail M.; Zhaksybaev, Nabi K., deceased; and Zhaksybaeva, Ekaterina S., executrix, 4,300,802, Cl. 299-64.000.
Vos, Wilbur D.: *See—*
Musgrove, Donovon E.; and Vos, Wilbur D., 4,300,798, Cl. 297-184.000.
Voss, Jurgen: *See—*
Schmidt, Dietrich; Meissner, Bruno; Rath, Heinz-Jorg; Regler, Dieter; and Voss, Jurgen, 4,300,965, Cl. 156-154.000.
Vujevic, Aleksandar: *See—*
Torbus, Marek; and Vujevic, Aleksandar, 4,301,271, Cl. 528-85.000.
Vulikh, Alexandr I.: *See—*
Nikandrov, Gennady A.; Alovyainikov, Alexandr A.; Varlamova, Ljudmila V.; Vulikh, Alexandr I.; Lopatin, Jury P.; Tikhomirov, Vladimir A.; Chebukhanova, Vera A.; Preobrazhensky, Pavel S.; Spiridonov, Viktor E.; Zhelonkin, Alexandr G.; and Varlamov, Rudolf P., 4,300,925, Cl. 55-242.000.
W. R. Grace & Co.: *See—*
Sanchez, Moises G.; and Herrera, Jose E., 4,301,037, Cl. 252-462.000.
Sanchez, Moises G., 4,301,131, Cl. 423-321.00R.
W. R. Grace & Co., Cryovac Division: *See—*
Olcott, Tyler K., 4,301,111, Cl. 264-515.000.
WABCO Fahrzeugbremsen GmbH: *See—*
Reinecke, Erich, 4,300,805, Cl. 303-22.00R.
Wacker-Chemie GmbH: *See—*
Deubzer, Bernward; Brunner, Erich; Wilhelm, Herman; and Sallersbeck, Konrad, 4,301,215, Cl. 428-447.000.
Patzke, Jorg; and Wegehaupt, Karl-Heinrich, 4,301,056, Cl. 260-37.0SB.
Wacker-Chemitronic Gesellschaft fur Elektronik-Grundstoffe mbH: *See—*
Schmidt, Dietrich; Meissner, Bruno; Rath, Heinz-Jorg; Regler, Dieter; and Voss, Jurgen, 4,300,965, Cl. 156-154.000.
Wade, Robert C.; and Hui, Benjamin C., to Thiokol Corporation. Synthesis of $NaBH_3CN$ and related compounds. 4,301,129, Cl. 423-284.000.
Waegemann, C. Peter. Binder for paper sheets with pre-formed holes. 4,300,848, Cl. 402-13.000.
Wagner, Daniel B.: *See—*
Feingers, Judith; Pick, Anthony J.; and Wagner, Daniel B., 4,301,139, Cl. 424-1.000.
Wagner, Hans-Ruedi. Box for cigarettes, cigars and the like smoking units. 4,300,675, Cl. 206-252.000.
Wagner, Kuno; Ick, Jurgen; and Balle, Gerhard, to Bayer Aktiengesellschaft. Process for the production of aminoplast dispersions. 4,301,262, Cl. 525-509.000.
Wagner, Kuno, to Bayer Aktiengesellschaft. Process for the preparation of low molecular weight polyhydroxyl compounds. 4,301,310, Cl. 568-863.000.
Wagner, Ted R.: *See—*
Gusching, Nagle V.; and Wagner, Ted R., 4,300,418, Cl. 82-36.00A.
Waiamea Company, Inc.: *See—*
Donan, David C., Jr., 4,300,859, Cl. 405-259.000.
Wait, Hershey L.; and Kordowski, Edward S., to General Box Company. Hinged pallet box. 4,300,694, Cl. 217-43.00R.
Waldbillig, Charles C., to Medex Inc. Constant flush device. 4,300,571, Cl. 128-673.000.

Walkowiak, Michael: *See—*
Suling, Carlhans; Balle, Gerhard; Leusner, Bernd; Schulz, Hans-Hermann; and Walkowiak, Michael, 4,300,886, Cl. 433-202.000.
Wallace, Kurt F.; Frye, Greg G.; and Grayson, David A., to Atari, Inc. Method and apparatus for video signal resolution enhancement. 4,301,473, Cl. 358-166.000.
Wallace Murray Corporation: *See—*
Zinn, Michael J.; Bremer, Robert C., Jr.; Williams, Lewis E.; and Haupt, Hans O., 4,300,383, Cl. 73-11.000.
Wallevik, Oddmund: *See—*
Solheim, Peder R.; and Wallevik, Oddmund, 4,301,339, Cl. 200-146.00R.
Walter, John L.: *See—*
Luborsky, Fred E.; and Walter, John L., 4,300,950, Cl. 75-123.00B.
Ward, Phillip W.: *See—*
Cao, Chung Van; and Ward, Phillip W., 4,300,653, Cl. 181-107.000.
Wardell, Gerald E.; and McBrierty, Vincent J., to Provost, Fellows and Scholars of the College of the Holy and Undivided Trinity of Queen Elizabeth, The. NMR Test method for dispersion of solids in elastomer compositions. 4,301,411, Cl. 324-307.000.
Warner-Lambert Company: *See—*
Grabowski, Albert T.; and Khan, Sadath U., 4,301,176, Cl. 424-318.000.
Warning, Richard L. Remote outboard motor steering control. 4,300,888, Cl. 440-62.000.
Warren, Barbara K., to Union Carbide Corporation. Process for the selective production of ethanol and methanol directly from synthesis gas. 4,301,253, Cl. 518-700.000.
Watanabe, Kenzi: *See—*
Yoshida, Hiroyuki; Akazawa, Toshitada; Haneda, Tadayosi; and Watanabe, Kenzi, 4,300,992, Cl. 204-242.000.
Watanabe, Nobuatsu: *See—*
Kondo, Teruhisa; Ishiguro, Jiro; and Watanabe, Nobuatsu, 4,301,026, Cl. 252-400.00R.
Watanabe, Shizuo: *See—*
Yamamoto, Ryuichi; and Watanabe, Shizuo, 4,301,136, Cl. 423-447.800.
Watanabe, Yukihiro: *See—*
Takada, Shigetaka; Kasuya, Kazusato; and Watanabe, Yukihiro, 4,300,505, Cl. 123-445.000.
Watkins, Hogh: *See—*
Sprecker, Mark A.; Sanders, James M.; Schreiber, William L.; Watkins, Hugh; Vinals, Joaquin F.; Shuster, Edward J.; O'-Rourke, Thomas J.; Hagedorn, Myrna L.; and Klemarczyk, Philip, 4,301,302, Cl. 568-373.000.
Wiegers, Wilhelmus J.; Sprecker, Mark A.; Watkins, Hugh; Vock, Manfred H.; and Schmitt, Frederick L., 4,301,076, Cl. 260-345.200.
Watson, Kenneth. Rotatable ice-formation-preventing device. 4,300,855, Cl. 405-61.000.
Waxman, Elliot: *See—*
Weintraub, Morton; Waxman, Elliot; and Gendelman, Bernard, 4,301,542, Cl. 455-353.000.
Weaver, Max A.; and Coates, Clarence A., Jr., to Eastman Kodak Company. Azo dyes from five membered ring heterocyclic amines and aniline, tetrahydroquinoline and benzomorpholine couplers containing thiosulfate alkyl groups. 4,301,069, Cl. 260-152.000.
Weaver, Max A.: *See—*
Giles, Ralph R.; and Weaver, Max A., 4,301,068, Cl. 260-152.000.
Giles, Ralph R.; and Weaver, Max A., 4,301,070, Cl. 260-155.000.
Giles, Ralph R.; and Weaver, Max A., 4,301,071, Cl. 260-158.000.
Weaver, Paul L. Power miter saw. 4,300,426, Cl. 83-471.300.
Webasto-Werk W. Baier GmbH & Co.: *See—*
Baier, Werner; and Friedl, Reiner, 4,300,720, Cl. 237-12.30A.
Webb, Richard L.: *See—*
Rosensaft, Michael N.; and Webb, Richard L., 4,300,565, Cl. 128-335.300.
Webber, William T., to Rockwell International Corporation. Prevaporizing diesel precombustion chamber. 4,300,497, Cl. 123-254.000.
Weber, Harold J. Multilevel power assisted steering. 4,300,650, Cl. 180-142.000.
Wechsler, Allan. Chess-like board games. 4,300,768, Cl. 273-260.000.
Weckler, Gerhard: *See—*
Engelhardt, Friedrich; Keil, Karl-Heinz; Weckler, Gerhard; and Sternberger, Klaus, 4,300,903, Cl. 8-531.000.
Weder, Donald E.: *See—*
Weder, Edwin H.; and Weder, Donald E., 4,300,312, Cl. 47-72.000.
Weder, Edwin H.; and Weder, Donald E. Flower pot covering. 4,300,312, Cl. 47-72.000.
Wegehaupt, Karl-Heinrich: *See—*
Patzke, Jorg; and Wegehaupt, Karl-Heinrich, 4,301,056, Cl. 260-37.0SB.
Wegmuller, Hans: *See—*
Rohringer, Peter; and Wegmuller, Hans, 4,301,217, Cl. 428-528.000.
Wehner, Wolfgang; and Kostler, Hans-Gunter, to Ciba-Geigy Corporation. Process for the production of methyl-alkyl tin dichlorides. 4,301,085, Cl. 260-429.700.
Wehr, Hubert, to Cyjkio-Gesellschaft Emil Hoffmann. Apparatus for the welding of strips of thermoplastic material lying on top of each other. 4,300,976, Cl. 156-502.000.
Weintraub, Morton; Waxman, Elliot; and Gendelman, Bernard. Remote control of appliances. 4,301,542, Cl. 455-353.000.
Weisrock, William P., to Standard Oil Company (Indiana). Method for improving xanthan yield. 4,301,247, Cl. 435-104.000.
Wellmann, Klaus: *See—*
Rebbe, Klaus; Rosicke, Berd; and Wellmann, Klaus, 4,300,573, Cl. 128-686.000.
Wentler, George E.; McGrady, Joseph; Gosselink, Eugene P.; and Cilley, William A., to Procter & Gamble Company, The. Biodegradable zwitterionic surfactant compounds. 4,301,044, Cl. 252-545.000.
Wenz, Wilhelm: *See—*
Schoppe, Fritz; and Wenz, Wilhelm, 4,300,480, Cl. 122-121.000.
Werkzeugmaschinenfabrik Oerlikon-Buhrle AG: *See—*
Bigler, Hans-Ulrich, 4,300,453, Cl. 102-307.000.
Werych, Ewald R., to General Signal Corp. Industrial furnace with side wall ceramic insulating modules. 4,300,882, Cl. 432-247.000.
Wescom, Inc.: *See—*
Jordan, Thomas W., 4,301,494, Cl. 361-415.000.
Wesemeyer, Jurgen: *See—*
Haubner, Georg; and Wesemeyer, Jurgen, 4,301,504, Cl. 364-200.000.
Wessel, Wolf: *See—*
Straubel, Max; Stumpp, Gerhard; Krieger, Klaus; and Wessel, Wolf, 4,300,515, Cl. 123-568.000.
West Electric Co., Ltd.: *See—*
Hirata, Shinji, 4,301,392, Cl. 315-241.00P.
Western Electric Co., Inc.: *See—*
Burns, John A., 4,301,237, Cl. 430-394.000.
Jonelis, John A., 4,301,343, Cl. 200-283.000.
Plichta, George J.; and Unger, Thomas E., 4,301,192, Cl. 427-97.000.
Westinghouse Electric Corp.: *See—*
Bistran, John M., Jr.; and Wright, Lawrence G., 4,300,400, Cl. 73-861.280.
Lowry, Lewis R., 4,301,462, Cl. 357-30.000.
Szabo, Arthur D., 4,300,677, Cl. 206-319.000.
Whinfrey, Thomas B., to Boeing Company, The. Duct support structure. 4,300,738, Cl. 248-62.000.
Whistler, Roy L., to Purdue University. Synthesis of daunosamine hydrochloride and intermediates used in its preparation. 4,301,276, Cl. 536-4.000.
Whitemore, Christopher E.; and Carrillo, Robert M., to Rohr Industries, Inc. Bonding tool for venting honeycomb noise attenuation structure during manufacture. 4,300,978, Cl. 156-581.000.
Whiting, Roger: *See—*
Kluge, Arthur F.; Strosberg, Arthur M.; Whiting, Roger; and Christie, George A., 4,301,171, Cl. 424-273.00B.
Whitley, James M.: *See—*
Whitley, William N.; and Whitley, James M., 4,300,797, Cl. 296-164.000.
Whitley, William N.; and Whitley, James M. Compactly foldable recreation enclosure. 4,300,797, Cl. 296-164.000.
Wiberger, Lars I.; Ronnow, Peter H.; Tengblad, Per F.; and Hellman, Bert G. H., to Chemical Dynamics Sweden AB. Method for increasing the pressure in oil-bearing geological structures. 4,300,632, Cl. 166-246.000.
Wieder, Armin, to Siemens Aktiengesellschaft. Method for the manufacture of a monolithic, static memory cell. 4,300,279, Cl. 29-571.000.
Wiegers, Wilhelmus J.; Sprecker, Mark A.; Watkins, Hugh; Vock, Manfred H.; and Schmitt, Frederick L., to International Flavors & Fragrances Inc. Isochroman musk compounds and organoleptic uses thereof. 4,301,076, Cl. 260-345.200.
Wielinger, Hans: *See—*
Bleisteiner, Manfred; Rittersdorf, Walter; and Wielinger, Hans, 4,300,905, Cl. 23-230.00B.
Wiener, Charles: *See—*
van der Loo, Henricus E.; Wiener, Charles; and Higginbotham, John D., 4,300,576, Cl. 131-335.000.
Wiesner, Peter; and Heim, Ulrich, to Dragerwerk Aktiengesellschaft. Method and apparatus for taking samples for the determination of breath alcohol content. 4,300,384, Cl. 73-23.000.
Wilbeck, Jerry L.: *See—*
Baxter, Bobby G.; Wilbeck, Jerry L.; and Wilbeck, Wendell J., 4,300,640, Cl. 172-311.000.
Wilbeck, Wendell J.: *See—*
Baxter, Bobby G.; Wilbeck, Jerry L.; and Wilbeck, Wendell J., 4,300,640, Cl. 172-311.000.
Wilder, Gene R., to Monsanto Company. Vulcanizable rubber compositions scorch inhibited by 2-(thioamino)-4,6-diamino-1,3,5-triazines. 4,301,260, Cl. 525-348.000.
Wiley, Bruce F., to Phillips Petroleum Co. Sonic wave travel time measuring system. 4,300,394, Cl. 73-597.000.
Wilhelm, Herman: *See—*
Deubzer, Bernward; Brunner, Erich; Wilhelm, Herman; and Sallersbeck, Konrad, 4,301,215, Cl. 428-447.000.
Wilkins, Dale E.; and Conley, William J., to United States of America, Agriculture. Apparatus for planting seeds. 4,300,462, Cl. 111-34.000.
Wilkinson, Wilfred H.; and Henshaw, Harry, to Rolls-Royce Limited. Nozzle guide vane assembly for a gas turbine engine. 4,300,868, Cl. 415-137.000.
William Burke Associates, Inc.: *See—*
Burke, William B., 4,300,764, Cl. 273-1.50R.
William D. Ross Manufacturing Corporation: *See—*
Ross, William D., 4,300,416, Cl. 81-463.000.
Williams, Henry L., to Genlograph Company, The. Hydraulic pressure integrator. 4,300,352, Cl. 60-567.000.
Williams, Kenneth A.; and Bauer, Hans F., to Occidental Research Corporation. Removal of chlorine from pyrolysis vapors. 4,301,137, Cl. 423-481.000.

Williams, Lewis E.: *See—*
Zinn, Michael J.; Bremer, Robert C., Jr.; Williams, Lewis E.; and Haupt, Hans O., 4,300,383, Cl. 73-11.000.
Williams, Rafelia A., to Hercules Incorporated. Process for deterrent coating of triple base propellant compositions. 4,300,961, Cl. 149-10.000.
Williams, Ronald L., to Hughes Aircraft Company. Method of making foil termination for a capacitor. 4,301,354, Cl. 219-121.0ED.
Williamson, James H., Jr. Mounting member. 4,300,698, Cl. 220-85.00R.
Wilmotte, Stephan H., to Centre de Recherches Metallurgiques-Centrum voor Research in de Metallurgiqnes. Cooling of rolled metal products. 4,300,376, Cl. 72-201.000.
Wilson, Michael A. Paper clips. 4,300,268, Cl. 24-67.00R.
Wilson, Michael A., to Staodynamics, Inc. Air-permeable disposable electrode. 4,300,575, Cl. 128-798.000.
Wilson, Robert, to Timea Corporation. Continous casting method with vaporized coolant. 4,300,621, Cl. 164-485.000.
Wilt, Charles R.: *See—*
Heard, Harold; and Wilt, Charles R., 4,300,291, Cl. 34-10.000.
Winch, Allen R.; and Jones, Joseph K., to Cotton, Incorporated. Total fiber recovery method and apparatus. 4,300,267, Cl. 19-200.000.
Wind, Robert A.; and Yannoni, Costantino S., to International Business Machines Corporation. Spin imaging in solids using synchronously rotating field gradients and samples. 4,301,410, Cl. 324-307.000.
Windmoller & Holscher: *See—*
Achelpohl, Fritz; and Schneider, Horst, 4,300,893, Cl. 493-194.000.
Tetenborg, Konrad; and Oelrich, Hermann, 4,300,600, Cl. 141-10.000.
Wingate, David C.: *See—*
Andre, Gerald R.; Wingate, David C.; and Matteson, Thomas O., 4,300,728, Cl. 242-18.00A.
Winkelmann, Detlef: *See—*
Herrmann, Heinz; and Winkelmann, Detlef, 4,301,225, Cl. 430-66.000.
Wirth, Gallo & Co.: *See—*
Gallo, Mario; and Wirth, Johannes, 4,300,648, Cl. 177-229.000.
Wirth, Johannes: *See—*
Gallo, Mario; and Wirth, Johannes, 4,300,648, Cl. 177-229.000.
Wise, Bennett L. Aquarium structure. 4,300,478, Cl. 119-5.000.
Wisnouskas, Joseph S.: *See—*
Buckholtz, Harry E.; Moritz, Joseph J.; and Wisnouskas, Joseph S., 4,301,014, Cl. 210-721.000.
Witte, Wolfgang: *See—*
Schiemann, Dieter; and Witte, Wolfgang, 4,300,835, Cl. 356-334.000.
Wittler, David A.: *See—*
Mohammadioun, Said; Wittler, David A.; Titus, Theodore, IV; and Plunkett, Luther C., Jr., 4,301,525, Cl. 369-29.000.
Witzel, Frank; Puglia, Wayne J.; Clark, K. Warren; and Mackey, Donald A. M., to Life Savers, Inc. Liquid-filled chewing gum and method. 4,301,178, Cl. 426-5.000.
Wohlhaupter, Gerhard, to Emil Wohlhaupter & Co. Clamping device for a sliding mount. 4,300,271, Cl. 29-1.00A.
Wojnarowski, Robert J.: *See—*
Haase, Michael A.; Miller, Edward B.; Eichelberger, Charles W.; Cutler, Scott E.; and Wojnarowski, Robert J., 4,301,509, Cl. 364-557.000.
Wold, Duane V. Automobile wheel cylinder leak damage prevention. 4,300,589, Cl. 137-312.000.
Wolf, Manfred, to Concast AO. Method of monitoring the mold geometry during the continuous casting of metals, especially steel. 4,300,620, Cl. 164-452.000.
Wolf, Wayne R.: *See—*
Harnly, James M.; O'Haver, Thomas C.; Wolf, Wayne R.; and Golden, Bruce M., 4,300,833, Cl. 356-307.000.
Wolff, Erich: *See—*
Bruck, Rolf; and Wolff, Erich, 4,301,240, Cl. 430-537.000.
Wolff, Horst: *See—*
Heinze, Christoph; Botsch, Franz; and Wolff, Horst, 4,301,275, Cl. 528-500.000.
Wolfrey, Austin A., to General Electric Company. Polyurethane resin coating composition. 4,301,053, Cl. 260-29.2TN.
Woodland, Dennis R. Chain saw mill. 4,300,428, Cl. 83-574.000.
Woods, Thomas S.: *See—*
Schwing, Gregory W.; and Woods, Thomas S., 4,301,286, Cl. 544-211.000.
Woodward, James C.; and Holland, Marion D., to Robbins, Robert E., a part interest. Vacuum cleaning apparatus with compressed air means. 4,300,261, Cl. 15-345.000.
Woodward, Robert B.; and Bickel, Hans, to Ciba-Geigy Corporation. Process for the manufacture of enol derivatives. 4,301,278, Cl. 544-016.000.
Worm, Manfred: *See—*
Martin, Lawrence L.; and Worm, Manfred, 4,301,292, Cl. 548-239.000.
Wormser, Robert S. Shallow draft propeller pocket. 4,300,889, Cl. 440-69.000.
Worrell, Wayne L.: *See—*
Basu, Samarnath; and Worrell, Wayne L., 4,301,221, Cl. 429-218.000.
Wozniak, Glenn A.; Rady, Robert R.; and Pate, Harold T., to Indian Head Inc. Floor or bench mounted conduit cutting device. 4,300,425, Cl. 83-468.000.
Wright, Lawrence O.: *See—*
Bistran, John M., Jr.; and Wright, Lawrence G., 4,300,400, Cl. 73-861.280.
Wright, Thomas C.: *See—*
Stindt, Richard E.; and Wright, Thomas C., 4,300,566, Cl. 128-419.0PG.
Wueger, Karl W., to Leesona Corporation. Warp detection system. 4,300,599, Cl. 139-352.000.
Wunderwald, Peter: *See—*
Bartl, Knut; Ziegenhorn, Joachim; Wunderwald, Peter; Beaucamp, Klaus; and Lill, Helmut, 4,301,028, Cl. 252-408.000.
Wurttembergische Parfumerie-Fabrik GmbH: *See—*
Scheller, Hans U., 4,301,141, Cl. 424-7.000.
Wyman, Donald P.: *See—*
Lorenz, Donald H.; Tu, Shu T.; and Wyman, Donald P., 4,301,209, Cl. 428-339.000.
Wysocki, Andizej: *See—*
Schroeder, Jeizy; Lewandowski, Mieczyslaw; Kuzko, Antoni; Gorecki, Henryk; Zielinski, Krzysztof; Pozniak, Tadeusz; Zieba, Stefan; Gorecka, Helena; Pawelczyk, Adam; and Wysocki, Andizej, 4,301,130, Cl. 423-320.000.
Xerox Corporation: *See—*
Braswell, Charles D.; and Burkett, Robert A., 4,300,829, Cl. 355-14.00R.
Danchak, Nicholas, Jr.; Saxinger, Allan L.; Gray, Roger M.; and Kockler, Barry C., 4,300,756, Cl. 271-8.00R.
Yada, Hiroshi, to Dijet Industrial Co., Ltd. End milling tool. 4,300,862, Cl. 407-53.000.
Yalkowsky, Samuel H., to Upjohn Company, The. E-Type prostaglandin compositions. 4,301,175, Cl. 424-305.000.
Yamada, Minoru: *See—*
Idota, Yoshio; and Yamada, Minoru, 4,301,236, Cl. 430-393.000.
Yamada, Tsutomu: *See—*
Hara, Toshizo; and Yamada, Tsutomu, 4,300,491, Cl. 123-179.0BG.
Yamaguchi, Hiroshi: *See—*
Suenaga, Masahide; Shimizu, Noboru; Kudo, Mitsuhiro; Yamaguchi, Hiroshi; and Mitani, Masao, 4,301,353, Cl. 219-121.0LJ.
Yamaha Hatsudoki Kabushiki Kaisha: *See—*
Tezuka, Etsuhiro, 4,300,504, Cl. 123-432.000.
Yamamori, Kiyoshi: *See—*
Miura, Masayoshi; Yamamori, Kiyoshi; and Mizoguchi, Akira, 4,301,460, Cl. 346-140.00R.
Yamamoto, Hiroshi: *See—*
Sakamoto, Naraji; Saiki, Shuji; Sato, Kazue; Murata, Kousaku; and Yamamoto, Hiroshi, 4,300,655, Cl. 181-167.000.
Yamamoto, Isao: *See—*
Miyazawa, Sadayuki; Kadowaki, Takashi; and Yamamoto, Isao, 4,301,238, Cl. 430-495.000.
Yamamoto, Ryuichi; and Watanabe, Shizuo, to Toray Industries, Incorporated. Process for continuous graphitization of graphitizable precursor fibers. 4,301,136, Cl. 423-447.800.
Yamamoto, Shigeo: *See—*
Ochi, Shuhei; Ueda, Fumiya; Morihara, Nobuyuki; Namba, Hiroshi; Nishino, Motohisa; and Yamamoto, Shigeo, 4,300,556, Cl. 128-256.000.
Yamanaka, Akira; and Imura, Toshinori, to Minolta Camera Kabushiki Kaisha. Auto-focus camera having a rangefinder. 4,300,823, Cl. 354-25.000.
Yamanaka, Motosuke; Saito, Isao; Yamatsu, Kiyomi; and Fujimoto, Takako, to Eisai Co., Ltd. Novel imidazole compound and anti-depressing agent containing the same. 4,301,169, Cl. 424-273.00R.
Yamasaki, Shin: *See—*
Sato, Norimoto; Miyaoka, Minoru; Yamasaki, Shin; Inoue, Kimio; Kuriyama, Akimasa; Fukui, Tsugushi; and Asai, Toshihiro, 4,300,838, Cl. 366-84.000.
Yamashita, Akira: *See—*
Sugie, Hiromichi; Akado, Hajime; Yamashita, Akira; and Nakamura, Yasuhiko, 4,300,928, Cl. 55-385.00R.
Yamashita, Izumi; Yoshida, Kazuo; Kusumi, Yuji; Fukuda, Kunio; and Tazaki, Kichiya, to Asahi Dow Limited. Diester of 3,5,3',5'-tetrabromo-bisphenol A with halogenated aromatic carboxylic acid. 4,301,062, Cl. 260-45.75B.
Yamatsu, Kiyomi: *See—*
Yamanaka, Motosuke; Saito, Isao; Yamatsu, Kiyomi; and Fujimoto, Takako, 4,301,169, Cl. 424-273.00R.
Yamazaki, Hazime: *See—*
Kageyama, Kunio; Omote, Shigeo; Taguchi, Youichi; and Yamazaki, Hazime, 4,300,614, Cl. 152-347.000.
Yamazaki, Hiroshi: *See—*
Isayama, Takuro; Komai, Hiromichi; Yamazaki, Hiroshi; and Sato, Tsutomu, 4,301,459, Cl. 346-140.00R.
Yan, Tsoung-Yuan, to Mobil Oil Corporation. Method of treating a subterranean formation to remove ammonium ions. 4,300,860, Cl. 405-263.000.
Yannoni, Costantino S.: *See—*
Wind, Robert A.; and Yannoni, Costantino S., 4,301,410, Cl. 324-307.000.
Yano, Tadashi; Maruyama, Yoshiaki; and Toyota, Masahiro, to Mitsubishi Jukogyo Kabushiki Kaisha. Trim guide device for slitter-scorers. 4,300,421, Cl. 83-99.000.
Yasuda, Nobu; Masuda, Masafumi; and Morita, Tomoichi, to Mitsubishi Paper Mills, Ltd. Method for manufacturing cast-coated paper. 4,301,210, Cl. 428-342.000.
Yates, Brian L.; and Clark, Malcolm C., to Ciba-Geigy Corporation. Liquid form of dyestuffs. 4,300,901, Cl. 8-527.000.
Yazaki Sogyn Kabushiki Kaisha: *See—*
Furukawa, Noriyuki, 4,300,470, Cl. 116-332.000.

Yemington, Charles R.: *See—*
Miller, Harvey A.; Newman, Jon P.; and Yemington, Charles R., 4,301,399, Cl. 324-54.000.
Yetter, Forrest G., to United States of America, America. Groundspeed measurement system. 4,301,455, Cl. 343-106.00D.
Yeung, Anthony C.: *See—*
Alguire, Donald E.; Bennett, Robert; Kotulla, Norbert; and Yeung, Anthony C., 4,301,113, Cl. 422-2.000.
Yokohama Rubber Co., Ltd., The: *See—*
Kageyama, Kunio; Omote, Shigeo; Taguchi, Youichi; and Yamazaki, Hazime, 4,300,614, Cl. 152-347.000.
Yokoyama, Kenji, to Nippon Gakki Seizo Kabushiki Kaisha. Direct-coupled amplifier with output offset regulation. 4,301,421, Cl. 330-253.000.
Yoshiba, Shigeru, to Victor Company of Japan, Ltd. Apparatus for automatically packing record discs. 4,300,331, Cl. 53-573.000.
Yoshida, Hiroyuki; Akazawa, Toshitada; Haneda, Tadayosi; and Watanabe, Kenzi, to Hodogaya Chemical Co., Ltd. Activated cathode. 4,300,992, Cl. 204-242.000.
Yoshida, Kayoko: *See—*
Hasegawa, Masayasu; Nishikawa, Hideo; and Yoshida, Kayoko, 4,301,162, Cl. 424-263.000.
Yoshida, Kazuo: *See—*
Yamashita, Izumi; Yoshida, Kazuo; Kusumi, Yuji; Fukuda, Kunio; and Tazaki, Kichiya, 4,301,062, Cl. 260-45.75B.
Yoshida Kogyo K.K.: *See—*
Ueda, Minoru, 4,300,283, Cl. 29-766.000.
Yoshida, Takao; and Hall, John B., to International Flavors & Fragrances Inc. Flavoring with 5-methyl-3,5-octadien-2-one. 4,301,184, Cl. 426-534.000.
Yoshifuji, Junnosuke, to Nippon Cable System Inc. Control cable. 4,300,408, Cl. 74-501.00R.
Yoshigi, Hiroshi: *See—*
Fukinuki, Takahiko; Yoshigi, Hiroshi; and Shimazaki, Yumiko, 4,301,479, Cl. 358-257.000.
Yoshimura, Noriaki; and Tamura, Masuhiko, to Kuraray Co., Ltd. Preparation of etherified polyoxyalkylene derivatives. 4,301,083, Cl. 260-404.000.
Yoshinari, Hideki: *See—*
Suzuki, Akiyoshi; Hiraga, Ryozo; and Yoshinari, Hideki, 4,301,363, Cl. 250-216.000.
Yoshino Kogyosho Co., Ltd.: *See—*
Suzuki, Sadao, 4,300,880, Cl. 432-138.000.
Yoshioka, Masahiro, to Hitachi, Ltd. Tilting-pad bearings. 4,300,808, Cl. 308-76.000.
Yoshitake, Katsumi: *See—*
Taguchi, Tadashi; Fujikawa, Noboru; Kohno, Mitsuo; Yoshitake, Katsumi; and Satake, Kunio, 4,301,230, Cl. 430-273.000.
Young, Lewis B., to Mobil Oil Corporation. Preparing phenylalkanes. 4,301,316, Cl. 585-455.000.
Young, Lewis B., to Mobil Oil Corporation. Preparation of 2-phenylalkanes. 4,301,317, Cl. 585-455.000.
Yount, John W. Process for removing a resinous coating from fiberglass products. 4,300,955, Cl. 134-3.000.
Yurek, John J. Composite limiting sum and difference circuitry for extending the reception area of a frequency modulated stereo radio transmitter. 4,301,331, Cl. 179-1.0GC.
Zakharov, Valery V.: *See—*
Mikhailov, Gerold M.; Tyabin, Nikolai V.; Khvorostukhin, Vladimir A.; Zakharov, Valery V.; and Nikolaev, Vitaly N., 4,300,625, Cl. 165-95.000.
Zalewski, Leon. Vertical sight adjuster. 4,300,290, Cl. 33-392.000.
Zeeh, Bernd: *See—*
Buschmann, Ernst; Zeeh, Bernd; Pommer, Ernst-Heinrich; and Goetz, Norbert, 4,301,284, Cl. 544-106.000.
Zengel, Hans; Zielke, Rainer; and Bergfeld, Manfred, to Akzona Incorporated. Polyfunctional isocyanates free of alkali and orea groups. 4,301,257, Cl. 525-329.000.
Zenith Radio Corporation: *See—*
Shah, Ricky H., 4,301,041, Cl. 252-511.000.
Trump, Bruce, 4,301,330, Cl. 179-1.00A.
Zens, John F.: *See—*
Cumming, Richard J.; DeBano, John; Sajewski, Vincent F.; Zens, John F.; and Gardella, William A., 4,300,894, Cl. 493-210.000.
Zhaksybaev, Nabi K., deceased: *See—*
Mitin, Leonid A.; Fadeev, Petr Y.; Ponomarev, Leonid F.; Fadeev, Vladimir Y.; Rybert, Vyacheslav F.; Reutsky, Jury V.; Kulagin, Rim A.; Vorozheikin, Anatoly A.; Ermilov, Nikolai P.; Dimova, Lidia P.; Doskaziev, Adil G.; Korobkov, Vladlen V.; Babenko, Sergei A.; Akhmatov, Mikhail M.; Zhaksybaev, Nabi K., deceased; and Zhaksybaeva, Ekaterina S., executrix, 4,300,802, Cl. 299-64.000.
Zhaksybaeva, Ekaterina S., executrix: *See—*
Mitin, Leonid A.; Fadeev, Petr Y.; Ponomarev, Leonid F.; Fadeev, Vladimir Y.; Rybert, Vyacheslav F.; Reutsky, Jury V.; Kulagin, Rim A.; Vorozheikin, Anatoly A.; Ermilov, Nikolai P.; Dimova, Lidia P.; Doskaziev, Adil G.; Korobkov, Vladlen V.; Babenko, Sergei A.; Akhmatov, Mikhail M.; Zhaksybaev, Nabi K., deceased; and Zhaksybaeva, Ekaterina S., executrix, 4,300,802, Cl. 299-64.000.
Zhelonkin, Alexandr G.: *See—*
Nikandrov, Gennady A.; Alovyainikov, Alexandr A.; Varlamova, Ljudmila V.; Vulikh, Alexandr I.; Lopatin, Jury P.; Tikhomirov, Vladimir A.; Chebukhanova, Vera A.; Preobrazhensky, Pavel S.; Spiridonov, Viktor E.; Zhelonkin, Alexandr G.; and Varlamov, Rudolf P., 4,300,925, Cl. 55-242.000.
Zieba, Stefan: *See—*
Schroeder, Jeizy; Lewandowski, Mieczyslaw; Kuzko, Antoni; Gorecki, Henryk; Zielinski, Krzysztof; Pozniak, Tadeusz; Zieba, Stefan; Gorecka, Helena; Pawelczyk, Adam; and Wysocki, Andizej, 4,301,130, Cl. 423-320.000.
Ziegenhorn, Joachim: *See—*
Bartl, Knut; Ziegenhorn, Joachim; Wunderwald, Peter; Beaucamp, Klaus; and Lill, Helmut, 4,301,028, Cl. 252-408.000.
Ziegler, Hans: *See—*
Hagen, Helmut; Pommer, Ernst-Heinrich; Reuther, Wolfgang; and Ziegler, Hans, 4,301,157, Cl. 424-218.000.
Zielinski, Edward A.: *See—*
Comparato, Joseph R.; Hartman, Ernest L.; Zielinski, Edward A.; and Myrick, David T., 4,300,458, Cl. 110-263.000.
Zielinski, Krzysztof: *See—*
Schroeder, Jeizy; Lewandowski, Mieczyslaw; Kuzko, Antoni; Gorecki, Henryk; Zielinski, Krzysztof; Pozniak, Tadeusz; Zieba, Stefan; Gorecka, Helena; Pawelczyk, Adam; and Wysocki, Andizej, 4,301,130, Cl. 423-320.000.
Zielke, Rainer: *See—*
Zengel, Hans; Zielke, Rainer; and Bergfeld, Manfred, 4,301,257, Cl. 525-329.000.
Zimmerman, Edwin H. System to produce wood products from peeler core logs. 4,300,604, Cl. 144-41.000.
Zinn, Michael J.; Bremer, Robert C., Jr.; Williams, Lewis E.; and Haupt, Hans O., to Wallace Murray Corporation. Crankshaft damper resonance monitor. 4,300,383, Cl. 73-11.000.
Zintz, Howard C.; and Zintz, Walter A. Variable dam. 4,300,858, Cl. 405-100.000.
Zintz, Walter A.: *See—*
Zintz, Howard C.; and Zintz, Walter A., 4,300,858, Cl. 405-100.000.
Zolotovsky, Anatoly I.: *See—*
Shipai, Andrei K.; Zolotovsky, Anatoly I.; Moskovsky, Vladislav G.; Naumenko, Nikolai N.; Shimanovich, Vladimir D.; and Kiselevsky, Leonid I., 4,301,352, Cl. 219-121.0PR.
Zuk, Paul W. Process for restoration of clear plastic. 4,301,193, Cl. 427-140.000.
Zurn, Frank: *See—*
Briggs, James, 4,300,574, Cl. 128-734.000.
Zwick, Maurice M., to American Cyanamid Company. Process for melt-spinning transparent acrylonitrile polymer fiber from a hydrophobic polymer. 4,301,108, Cl. 264-206.000.
Zwick, Maurice M., to American Cyanamid Company. Process for biaxially oriented acrylonitrile polymer barrier film. 4,301,112, Cl. 264-564.000.

LIST OF REISSUE PATENTEES

TO WHOM

PATENTS WERE ISSUED ON THE 17TH DAY OF NOVEMBER, 1981

NOTE.—Arranged in accordance with the first significant character or word of the name (in accordance with city and telephone directory practice).

Bethlehem Steel Corporation: *See—*
Kreiger, John W., Re. 30,795, Cl. 75-256.000.
Bil, Milos S., to Clairol Incorporated. Process for preparing nitro-p-phenylenediamines. Re. 30,798, Cl. 564-406.000.
Clairol Incorporated: *See—*
Bil, Milos S., Re. 30,798, Cl. 564-406.000.
Davis, Chester, to Scott Paper Company. Associated dye salts and method of forming colored indicia therewith. Re. 30,797, Cl. 427-288.000.
Dow Chemical Co., The: *See—*
Lesinski, Chester A., Re. 30,796, Cl. 134-2.000.
Hayes, Robert R., to Oatey Co. Hand scraper. Re. 30,794, Cl. 29-78.000.
Kreiger, John W., to Bethlehem Steel Corporation. Green balls formed by agglomerating wet-collected fume produced in metallurgical furnaces. Re. 30,795, Cl. 75-256.000.
Lesinski, Chester A., to Dow Chemical Co., The. Scale removal, ferrous metal passivation and compositions therefor. Re. 30,796, Cl. 134-2.000.
Nakabayashi, Masahiro: *See—*
Zvanut, Albert J.; and Nakabayashi, Masahiro, Re. 30,799, Cl. 219-74.000.
Oatey Co.: *See—*
Hayes, Robert R., Re. 30,794, Cl. 29-78.000.
Scott Paper Company: *See—*
Davis, Chester, Re. 30,797, Cl. 427-288.000.
Sony Corporation: *See—*
Yamanaka, Seisuke, Re. 30,800, Cl. 358-44.000.
Stoody Company: *See—*
Zvanut, Albert J.; and Nakabayashi, Masahiro, Re. 30,799, Cl. 219-74.000.
Yamanaka, Seisuke, to Sony Corporation. Solid-state video camera. Re. 30,800, Cl. 358-44.000.
Zvanut, Albert J.; and Nakabayashi, Masahiro, to Stoody Company. Fabricated welding wire for corrosive-resistant stainless. Re. 30,799, Cl. 219-74.000.

LIST OF DESIGN PATENTEES

Abramo, Ralph J., to Sunbeam Plastics Corporation. Bottle. 261,864, 11-17-81, Cl. D9-378.000.
ADIDAS Fabrique de Chaussures de Sport: *See—*
Joseph, Michel, 261,822, Cl. D2-40.000.
Aerodata Corporation: *See—*
Davies, Daryl W.; and Levin, Harry P., 261,885, Cl. D14-106.000.
Akers, Raymond F., Jr., to Raycal Corporation. Salinity tester. 261,871, 11-17-81, Cl. D10-81.000.
Amici, F. Robert: *See—*
Reiner, Norbert L.; Wruck, Keith R.; and Amici, F. Robert, 261,881, Cl. D13-11.000.
Anderson, Edward E. Ground stake. 261,875, 11-17-81, Cl. D11-181.000.
Baus, Andre E. J.; Fontaine, Jean F. L.; and Ham, Brian L., to Goodyear Tire & Rubber Company, The. Tire. 261,878, 11-17-81, Cl. D12-147.000.
Beadle, Anthony C.; Mintern, Keith E.; and Stoddard, John, to International Standard Electric Corporation. Information display terminal. 261,884, 11-17-81, Cl. D14-106.000.
Bengtsson, Algot E. Hand stamp. 261,897, 11-17-81, Cl. D18-15.000.
Benson, Mason; and McIntosh, James K., to Carolina Enterprises, Inc. Portable vanity case. 261,825, 11-17-81, Cl. D3-39.000.
Berlant, George, to New Hermes Incorporated. Guard for cutting machine. 261,893, 11-17-81, Cl. D15-127.000.
Berman, James S.; and Stegmaier, Sigurd, to Citibank, N.A. Desk. 261,838, 11-17-81, Cl. D6-157.000.
Bezprozvanny, Grigory K.: *See—*
Chepil, Iraida N.; Levin, Lev B.; Bezprozvanny, Grigory K.; and Shturman, Yakov P., 261,898, Cl. D18-25.000.
Chepil, Iraida N.; Levin, Lev B.; Bezprozvanny, Grigory K.; and Shturman, Yakov P., 261,899, Cl. D18-25.000.
Chepil, Iraida N.; Levin, Lev B.; Bezprozvanny, Grigory K.; and Shturman, Yakov P., 261,900, Cl. D18-25.000.
Blanchard, Russell O.; Guzek, Joseph; and Matt, Donald A., to Motor Wheel Corporation. Wheel. 261,880, 11-17-81, Cl. D12-211.000.
Blasnik, William, to Hardware Designers, Inc. Channel support for drawer slides. 261,844, 11-17-81, Cl. D6-191.000.
Boukma, John, to Howard Miller Clock Co. Grandfather clock. 261,869, 11-17-81, Cl. D10-16.000.
Brand, Marshall C., to Morning Star, Inc. Display stand for greeting cards. 261,829, 11-17-81, Cl. D6-24.000.
Breneman, Jack L., to Quaker Oats Company, The. Toy race car. 261,912, 11-17-81, Cl. D21-137.000.
Bridgestone Tire Co., Ltd.: *See—*
Sato, Takeshi; Oosawa, Tooru; and Kojima, Hiroshi, 261,877, Cl. D12-141.000.
Brunson, Weltoo K.: *See—*
Hubbard, Vance M.; and Brunson, Welton K., 261,821, Cl. D2-27.000.
Burlington Industries, Inc.: *See—*
Carter, Gary L., 261,861, Cl. D9-305.000.
Bussiere, Ronald L. Orthodontic work tool or similar article. 261,932, 11-17-81, Cl. D24-10.000.
Camerino, Giuliana. Bottle. 261,862, 11-17-81, Cl. D9-319.000.
Carfagno, Samuel J. Coffee filter holder. 261,850, 11-17-81, Cl. D7-129.000.
Carolina Enterprises, Inc.: *See—*
Benson, Mason; and McIntosh, James K., 261,825, Cl. D3-39.000.
Carr, Pauline E. Valet. 261,842, 11-17-81, Cl. D6-186.000.
Carter, Gary L., to Burlington Industries, Inc. Pantyhose package. 261,861, 11-17-81, Cl. D9-305.000.
Caspersen, Frank S., to National Foodline Corporation. Housing for a soft ice cream machine. 261,890, 11-17-81, Cl. D15-82.000.
Celluloid S.A.: *See—*
Wachtel, Jean L., 261,845, Cl. D6-233.000.
Chepil, Iraida N.; Levin, Lev B.; Bezprozvanny, Grigory K.; and Shturman, Yakov P. Typeface for photocomposition. 261,898, 11-17-81, Cl. D18-25.000.
Chepil, Iraida N.; Levin, Lev B.; Bezprozvanny, Grigory K.; and Shturman, Yakov P. Typeface for photocomposition. 261,899, 11-17-81, Cl. D18-25.000.
Chepil, Iraida N.; Levin, Lev B.; Bezprozvanny, Grigory K.; and Shturman, Yakov P. Typeface for photocomposition. 261,900, 11-17-81, Cl. D18-25.000.
Cicci, George B.; and Scarnato, Thomas J., to International Harvester Company. Mower-cooditioner. 261,889, 11-17-81, Cl. D15-27.000.
Citibank, N.A.: *See—*
Berman, James S.; and Stegmaier, Sigurd, 261,838, Cl. D6-157.000.
Claman, Mike T., to Lewittes Furniture Enterprises, Inc. Chair. 261,833, 11-17-81, Cl. D6-57.000.
Clarion Co., Ltd.: *See—*
Hisatsune, Toshiyuki, 261,887, Cl. D14-96.000.
Coffman, Melvin C. Shaft for a marking instrument. 261,901, 11-17-81, Cl. D19-54.000.
Coleco Industries, Inc.: *See—*
Reiner, Norbert L.; Wruck, Keith R.; and Amici, F. Robert, 261,881, Cl. D13-11.000.
Combi Co., Ltd.: *See—*
Nakao, Shinroku; Ishii, Yoshiyasu; and Mizukami, Masako, 261,828, Cl. D6-7.000.
Nakao, Shinroku; Ishii, Yoshiyasu; and Hanashima, Taira, 261,915, Cl. D21-149.000.
Continental Group, Inc., The: *See—*
Fridl, James J.; and Hasegawa, Gary K., 261,868, Cl. D9-438.000.
Hasegawa, Gary K., 261,867, Cl. D9-438.000.
Creative Playgrounds Corporation: *See—*
Dieter, Berthold B.; and Gibson, Charles L., 261,917, Cl. D21-244.000.
Dalia, Salvatore A. Combined louver clip and retainer therefor. 261,860, 11-17-81, Cl. D8-395.000.
Dart Industries Inc.: *See—*
Tenzer, Abraham I., 261,874, Cl. D11-143.000.

Davies, Daryl W.; and Levin, Harry P., to Aerodata Corporation. Distance computer for light aircraft. 261,885, 11-17-81, Cl. D14-106.000.
Davis, Kristi L.; and Davis, Ronald M. Container for lotion. 261,865, 11-17-81, Cl. D9-389.000.
Davis, Ronald M.: *See*—
  Davis, Kristi L.; and Davis, Ronald M., 261,865, Cl. D9-389.000.
Dieter, Berthold B.; and Gibson, Charles L., to Creative Playgrounds Corporation. Playground climber. 261,917, 11-17-81, Cl. D21-244.000.
Donohue, Michael J. Firebox intake hood. 261,924, 11-17-81, Cl. D23-127.000.
Dunchock, Richard S., to SL Container Corporation. Storage compartment for an automobile. 261,827, 11-17-81, Cl. D3-40.000.
Dusza, Francis: *See*—
  Neal, Edmond A.; and Dusza, Francis, 261,855, Cl. D8-98.000.
Eisenberg, Alvin S., to Q-Co Industries, Inc. Television prompter mount. 261,836, 11-17-81, Cl. D6-132.000.
Eldridge, Paul H.: *See*—
  Schurgin, Herbert L.; and Eldridge, Paul H., 261,896, Cl. D16-124.000.
Envall, Bjorn E. A.; and Vahlenbreder, Aribert, to Saab-Scania Aktiebolag. Wheel. 261,879, 11-17-81, Cl. D12-211.000.
Envoys U.S.A., Inc.: *See*—
  Gamm, Robert J., 261,823, Cl. D2-309.000.
Erskine, Jimmy H.: *See*—
  Martin, Hal E.; and Erskine, Jimmy H., 261,931, Cl. D23-97.000.
Eva Gabor International: *See*—
  Lubin, Robert H., 261,941, Cl. D28-93.000.
Ferguson, Bobby R. Picture frame. 261,846, 11-17-81, Cl. D6-237.000.
Findlay Products Division of Rexcorp Management Ltd.: *See*—
  Mariager, Svend; and Mariager, Grace, 261,922, Cl. D23-95.000.
Firemaster Systems, Inc.: *See*—
  Lane, Byron D., 261,930, Cl. D23-95.000.
Fletcher, Robert, to Paramount Pictures Corporation. Jewelry pin. 261,872, 11-17-81, Cl. D11-70.000.
Fontaine, Jean F. L.: *See*—
  Baus, Andre E. J.; Fontaine, Jean F. L.; and Ham, Brian L., 261,878, Cl. D12-147.000.
Fridl, James J.; and Hasegawa, Gary K., to Continental Group, Inc., The. Pull tab for a tear strip opener. 261,868, 11-17-81, Cl. D9-438.000.
Frisella, Peter J., to Scottie Graphics Inc. Projection system. 261,895, 11-17-81, Cl. D16-20.000.
Fukushima, Hisao; and Hirooka, Junji, to Oki Electric Industry Co., Ltd. Transceiver for a car telephone set. 261,886, 11-17-81, Cl. D14-94.000.
Funaki, Hirokatsu; and Katsumata, Kenichi, to Matsushita Electric Industrial Co., Ltd. Hot plate. 261,849, 11-17-81, Cl. D7-123.000.
Gamm, Robert J., to Envoys U.S.A., Inc. Athletic shoe with pocket. 261,823, 11-17-81, Cl. D2-309.000.
Garoogian, Zakar: *See*—
  Nunez, Henry D.; and Garoogian, Zakar, 261,923, Cl. D23-123.000.
George, Wilfred R. Newspaper grate. 261,852, 11-17-81, Cl. D7-207.000.
Gibson, Charles L.: *See*—
  Dieter, Berthold B.; and Gibson, Charles L., 261,917, Cl. D21-244.000.
Gigante, John. Tomato stake or the like. 261,853, 11-17-81, Cl. D8-01.000.
Gilman & Co., Ltd.: *See*—
  Ho, Shun K., 261,907, Cl. D21-13.000.
Goodyear Tire & Rubber Company, The: *See*—
  Baus, Andre E. J.; Footaine, Jean F. L.; and Ham, Brian L., 261,878, Cl. D12-147.000.
Gordy International Incorporated: *See*—
  Steinberg, Alan M., 261,908, Cl. D21-61.000.
Grove Foods, Inc.: *See*—
  Perlmutter, R. Michel, 261,937, Cl. D25-26.000.
Gucci, Rodolfo, to Guccio Gucci S.r.l. Fabric. 261,943, 11-17-81, Cl. D92-1.00P.
Guccio Gucci S.r.l.: *See*—
  Gucci, Rodolfo, 261,943, Cl. D92-1.00P.
Gulick, Louis E. Decorative lamp base. 261,938, 11-17-81, Cl. D26-110.000.
Guzek, Joseph: *See*—
  Blanchard, Russell O.; Guzek, Joseph; and Matt, Donald A., 261,880, Cl. D12-211.000.
Halloran, William X. Slotted intramedullary rod. 261,935, 11-17-81, Cl. D24-33.000.
Ham, Brian L.: *See*—
  Baus, Andre E. J.; Footaine, Jean F. L.; and Ham, Brian L., 261,878, Cl. D12-147.000.
Hamrick, George B. Hoop guide. 261,910, 11-17-81, Cl. D21-101.000.
Hanashima, Taira: *See*—
  Nakao, Shinroku; Ishii, Yoshiyasu; and Hanashima, Taira, 261,915, Cl. D21-149.000.
Hardware Designers, Inc.: *See*—
  Blasnik, William, 261,844, Cl. D6-191.000.
Harrison, Charles A.: *See*—
  Masterson, Oliver W.; Harrison, Charles A.; and Singletary, Buckley A., 261,851, Cl. D32-18.000.
Hasegawa, Gary K., to Continental Group, Inc., The. Pull tab for a tear strip opener. 261,867, 11-17-81, Cl. D9-438.000.
Hasegawa, Gary K.: *See*—
  Fridl, James J.; and Hasegawa, Gary K., 261,868, Cl. D9-438.000.
Hayden, M. Dean, Jr. Jacket-type coaster. 261,848, 11-17-81, Cl. D7-45.000.
Heatwole, Richard, to Southerland, James A., a part interest. Balancing toy. 261,909, 11-17-81, Cl. D21-66.000.
Hirooka, Junji: *See*—
  Fukushima, Hisao; and Hirooka, Junji, 261,886, Cl. D14-94.000.
Hisatsune, Toshiyuki, to Clarion Co., Ltd. Amplifier for automobile. 261,887, 11-17-81, Cl. D14-96.000.
Ho, Shun K., to Gilman & Co., Ltd. Electronic game housing. 261,907, 11-17-81, Cl. D21-13.000.
Holloway, Thomas F., to Risdon Manufacturing Company, The. Lipstick case or similar article. 261,940, 11-17-81, Cl. D28-88.000.
Howard Miller Clock Co.: *See*—
  Boukma, John, 261,869, Cl. D10-16.000.
Hubbard, Vance M.; and Brunson, Welton K., to Tecnol, Inc. Heel or elbow protector. 261,821, 11-17-81, Cl. D2-27.000.
Huser, J. P., to Utilis Mullheim Aktiengesellschaft. Milk-shaker. 261,892, 11-17-81, Cl. D15-99.000.
International Harvester Company: *See*—
  Cicci, George B.; and Scarnato, Thomas J., 261,889, Cl. D15-27.000.
International Standard Electric Corporation: *See*—
  Beadle, Anthony C.; Mintern, Keith E.; and Stoddard, John, 261,884, Cl. D14-106.000.
Ishii, Yoshiyasu: *See*—
  Nakao, Shinroku; Ishii, Yoshiyasu; and Mizukami, Masako, 261,828, Cl. D6-7.000.
  Nakao, Shinroku; Ishii, Yoshiyasu; and Hanashima, Taira, 261,915, Cl. D21-149.000.
Ishiyama, Atsushi, to Yamaha Hatsudoki Kabushiki Kaisha. Motortricycle. 261,876, 11-17-81, Cl. D12-110.000.
Joseph, Michel, to ADIDAS Fabrique de Chaussures de Sport. Bathing suit. 261,822, 11-17-81, Cl. D2-40.000.
Katsumata, Kenichi: *See*—
  Funaki, Hirokatsu; and Katsumata, Kenichi, 261,849, Cl. D7-123.000.
Knox, Carleton R. Surfboard fin. 261,916, 11-17-81, Cl. D21-231.000.
Kojima, Hiroshi: *See*—
  Sato, Takeshi; Oosawa, Tooru; and Kojima, Hiroshi, 261,877, Cl. D12-141.000.
Kronfeld, Mervin B.; and Rubin, Bruce J., to Nortronics Company, Inc. Cassette tape eraser. 261,888, 11-17-81, Cl. D14-99.000.
Kvasnicka, Donald A. Cocktail table or similar article. 261,839, 11-17-81, Cl. D6-177.000.
Kvasnicka, Donald A. Cocktail table or similar article. 261,840, 11-17-81, Cl. D6-177.000.
Kvasnicka, Donald A. Cocktail table or similar article. 261,841, 11-17-81, Cl. D6-179.000.
Laakkonen, Launo, to Oy Kolster Ab. Over-pressure valve for ventilation. 261,925, 11-17-81, Cl. D23-151.000.
Lane, Byron D., to Firemaster Systems, Inc. Fireplace grate and blower tube surround assembly with elevated water heating heat exchanger tubes and baffle structure. 261,930, 11-17-81, Cl. D23-95.000.
Lassiter, Will M. Trailer king pin lock. 261,858, 11-17-81, Cl. D8-331.000.
Levin, Harry P.: *See*—
  Davies, Daryl W.; and Levin, Harry P., 261,885, Cl. D14-106.000.
Levin, Lev B.: *See*—
  Chepil, Iraida N.; Levin, Lev B.; Bezprozvanny, Grigory K.; and Shturman, Yakov P., 261,898, Cl. D18-25.000.
  Chepil, Iraida N.; Levin, Lev B.; Bezprozvanny, Grigory K.; and Shturman, Yakov P., 261,899, Cl. D18-25.000.
  Chepil, Iraida N.; Levin, Lev B.; Bezprozvanny, Grigory K.; and Shturman, Yakov P., 261,900, Cl. D18-25.000.
Lewittes Furniture Enterprises, Inc.: *See*—
  Claman, Mike T., 261,833, Cl. D6-57.000.
Litt, David K. Power and test module. 261,870, 11-17-81, Cl. D10-75.000.
Lubin, Robert H., to Eva Gabor International. Wig support. 261,941, 11-17-81, Cl. D28-93.000.
Lubke GmbH & Co. KG: *See*—
  Lubke, Karl, 261,835, Cl. D6-73.000.
Lubke, Karl, to Lubke GmbH & Co. KG. Armchair. 261,835, 11-17-81, Cl. D6-73.000.
Luckey, Clarence A., to Luckey, Clarence A. Auxiliary orthopedic seat for automobiles. 261,831, 11-17-81, Cl. D6-48.000.
Marchand, William R. Novelty statuette. 261,873, 11-17-81, Cl. D11-131.000.
Marconi, Karen D., to Quaker Oats Company, The. Stuffed toy dog. 261,914, 11-17-81, Cl. D21-161.000.
Mariager, Grace: *See*—
  Mariager, Svend; and Mariager, Grace, 261,922, Cl. D23-95.000.
Mariager, Svend; and Mariager, Grace, to Findlay Products Division of Rexcorp Management Ltd. Fireplace insert stove. 261,922, 11-17-81, Cl. D23-95.000.
Marks, Robert J. Lounge seat. 261,830, 11-17-81, Cl. D6-37.000.
Martin, Hal E.; and Erskine, Jimmy H. Wood-burning stove. 261,931, 11-17-81, Cl. D23-97.000.
Masterson, Oliver W.; Harrison, Charles A.; and Singletary, Buckley A., to Sears, Roebuck & Co. Housing for hand vacuum and the like. 261,851, 11-17-81, Cl. D32-18.000.
Matsumoto, Tetsuo, to Yakult Honsha Co., Ltd. Packaging container. 261,866, 11-17-81, Cl. D9-432.000.

Matsushita Electric Industrial Co., Ltd.: *See*—
  Funaki, Hirokatsu; and Katsumata, Kenichi, 261,849, Cl. D7-123.000.
  Obata, Shuichi; and Nakagawa, Takamichi, 261,882, Cl. D14-14.000.
Matt, Donald A.: *See*—
  Blanchard, Russell O.; Guzek, Joseph; and Matt, Donald A., 261,880, Cl. D12-211.000.
Mayuzumi, Masaki, to Tomy Kogyo Co., Inc. Pocket size maze game box. 261,911, 11-17-81, Cl. D21-104.000.
McIntosh, James K.: *See*—
  Benson, Mason; and McIntosh, James K., 261,825, Cl. D3-39.000.
McIntosh Laboratories, Inc.: *See*—
  Russell, Roger H.; and Rogers, Thomas A., 261,883, Cl. D14-33.000.
Meisner, Edward H., to Scovill Inc. Door handle and lockset. 261,856, 11-17-81, Cl. D8-301.000.
Mielke, Bodo, to Rollei-Werke Franke & Heidecke. Camera. 261,894, 11-17-81, Cl. D16-6.000.
Minnesota Mining and Manufacturing Company: *See*—
  Sweet, Lawrence A., 261,942, Cl. D29-7.000.
Mintern, Keith E.: *See*—
  Beadle, Anthony C.; Mintern, Keith E.; and Stoddard, John, 261,884, Cl. D14-106.000.
Mizukami, Masako: *See*—
  Nakao, Shinroku; Ishii, Yoshiyasu; and Mizukami, Masako, 261,828, Cl. D6-7.000.
Moore, David D. Fishing lure. 261,921, 11-17-81, Cl. D22-27.000.
Mornaghini, Franco, to Trigonal Arredamento Bagno di Mornaghini Franco & C. s.a.s. Combined washbasin and cabinet. 261,928, 11-17-81, Cl. D23-59.000.
Morning Star, Inc.: *See*—
  Brand, Marshall C., 261,829, Cl. D6-24.000.
Motor Wheel Corporation: *See*—
  Blanchard, Russell O.; Guzek, Joseph; and Matt, Donald A., 261,880, Cl. D12-211.000.
Mulder, Bernard H. Combined clipboard and file container. 261,903, 11-17-81, Cl. D19-88.000.
Nakagawa, Takamichi: *See*—
  Obata, Shuichi; and Nakagawa, Takamichi, 261,882, Cl. D14-14.000.
Nakao, Shinroku; Ishii, Yoshiyasu; and Mizukami, Masako, to Combi Co., Ltd. Baby chair. 261,828, 11-17-81, Cl. D6-7.000.
Nakao, Shinroku; Ishii, Yoshiyesu; and Hanashima, Taira, to Combi Co., Ltd. Animate figure toy. 261,915, 11-17-81, Cl. D21-149.000.
National Foodline Corporation: *See*—
  Caspersen, Frank S., 261,890, Cl. D15-82.000.
Neal, Edmond A.; and Dusza, Francis, to Russell Harringtoo Cutlery, Inc. Mat cutter. 261,855, 11-17-81, Cl. D8-98.000.
Nevarez, Rafael T. Hair comb. 261,939, 11-17-81, Cl. D28-21.000.
New Hermes Incorporated: *See*—
  Berlant, George, 261,893, Cl. D15-127.000.
Nielsen, Fred. Twist-off cap gripper. 261,854, 11-17-81, Cl. D8-40.000.
Nortronics Company, Inc.: *See*—
  Kronfeld, Mervin B.; and Rubin, Bruce J., 261,888, Cl. D14-99.000.
Nunez, Henry D.; and Garoogian, Zakar. Portable electric heater. 261,923, 11-17-81, Cl. D23-123.000.
Oakley, Sterling A. Combined loose leaf holder and display article. 261,902, 11-17-81, Cl. D19-78.000.
Obata, Shuichi; and Nakagawa, Takamichi, to Matsushita Electric Industrial Co., Ltd. Record player. 261,882, 11-17-81, Cl. D14-14.000.
Ohmura, Ryuichi. Line guide for fishing rod. 261,918, 11-17-81, Cl. D22-24.000.
Ohmura, Ryuichi. Line guide for fishing rod. 261,919, 11-17-81, Cl. D22-24.000.
Ohmura, Ryuichi. Line guide for fishing rod. 261,920, 11-17-81, Cl. D22-24.000.
Oki Electric Industry Co., Ltd.: *See*—
  Fukushima, Hisao; and Hirooka, Junji, 261,886, Cl. D14-94.000.
Oosawa, Tooru: *See*—
  Sato, Takeshi; Oosawa, Tooru; and Kojima, Hiroshi, 261,877, Cl. D12-141.000.
Oy Kolster Ab: *See*—
  Laakkonen, Launo, 261,925, Cl. D23-151.000.
Pack Image, Inc.: *See*—
  Stone, Orison W., 261,944, Cl. D9-346.000.
Paramount Pictures Corporation: *See*—
  Fletcher, Robert, 261,872, Cl. D11-70.000.
Pardo, John, to Procter & Gamble Co., The. Jar. 261,863, 11-17-81, Cl. D9-353.000.
Peregrine Industries, Incorporated: *See*—
  Tulipani, Victor J., 261,926, Cl. D23-55.00X.
Perlmutter, R. Michel, to Grove Foods, Inc. Kiosk. 261,937, 11-17-81, Cl. D25-26.000.
Polhemus, Marlan H., to Tenex Corporatioo. Stacked letter tray. 261,904, 11-17-81, Cl. D19-92.000.
Porteous, Don D. Dental burr holder. 261,934, 11-17-81, Cl. D24-31.000.
Primault, Andre, to Societe Generale de Fonderie. Washstand. 261,929, 11-17-81, Cl. D23-61.000.
Procter & Gamble Co., The: *See*—
  Pardo, John, 261,863, Cl. D9-353.000.
Q-Co Industries, Inc.: *See*—
  Eisenberg, Alvin S., 261,836, Cl. D6-132.000.
Quaker Oats Company, The: *See*—
  Breneman, Jack L., 261,912, Cl. D21-137.000.
  Marconi, Karen D., 261,914, Cl. D21-161.000.
Ranno, Carl P.: *See*—
  Sutton, Lawrence R.; and Ranno, Carl P., 261,859, Cl. D8-389.000.
Raycal Corporation: *See*—
  Akers, Raymond F., Jr., 261,871, Cl. D10-81.000.
Reiner, Norbert L.; Wruck, Keith R.; and Amici, F. Robert, to Coleco Industries, Inc. Battery eliminator. 261,881, 11-17-81, Cl. D13-11.000.
Risdon Manufacturing Company, The: *See*—
  Holloway, Thomas F., 261,940, Cl. D28-88.000.
Rogers, Thomas A.: *See*—
  Russell, Roger H.; and Rogers, Thomas A., 261,883, Cl. D14-33.000.
Rollei-Werke Franke & Heidecke: *See*—
  Mielke, Bodo, 261,894, Cl. D16-6.000.
Rubin, Bruce J.: *See*—
  Kronfeld, Mervin B.; and Rubin, Bruce J., 261,888, Cl. D14-99.000.
Russell Harrington Cutlery, Inc.: *See*—
  Neal, Edmond A.; and Dusza, Francis, 261,855, Cl. D8-98.000.
Russell, Roger H.; and Rogers, Thomas A., to McIntosh Laboratories, Inc. Speaker assembly. 261,883, 11-17-81, Cl. D14-33.000.
Russo, Joseph L.: *See*—
  Sonder, Richard; and Russo, Joseph L., 261,837, Cl. D6-138.000.
Ryon, Don J., III. Portion of a tongue for a buckle. 261,824, 11-17-81, Cl. D2-433.000.
Saab-Scania Aktiebolag: *See*—
  Envall, Bjorn E. A.; and Vahlenbreder, Aribert, 261,879, Cl. D12-211.000.
Sato, Sanji, to Yonezawa Toys Co. Ltd. Marble game playing board. 261,906, 11-17-81, Cl. D21-12.000.
Sato, Takeshi; Oosawa, Tooru; and Kojima, Hiroshi, to Bridgestone Tire Co., Ltd. Vehicle tire. 261,877, 11-17-81, Cl. D12-141.000.
Scarnato, Thomas J.: *See*—
  Cicci, George B.; and Scarnato, Thomas J., 261,889, Cl. D15-27.000.
Schurgin, Herbert L.; and Eldridge, Paul H. Contact lens inserting instrument. 261,896, 11-17-81, Cl. D16-124.000.
Scottie Graphics Inc.: *See*—
  Frisella, Peter J., 261,895, Cl. D16-20.000.
Scovill Inc.: *See*—
  Meisner, Edward H., 261,856, Cl. D8-301.000.
Sears, Roebuck & Co.: *See*—
  Masterson, Oliver W.; Harrison, Charles A.; and Singletary, Buckley A., 261,851, Cl. D32-18.000.
Shturman, Yakov P.: *See*—
  Chepil, Iraida N.; Levin, Lev B.; Bezprozvanny, Grigory K.; and Shturman, Yakov P., 261,898, Cl. D18-25.000.
  Chepil, Iraida N.; Levin, Lev B.; Bezprozvanny, Grigory K.; and Shturman, Yakov P., 261,899, Cl. D18-25.000.
  Chepil, Iraida N.; Levin, Lev B.; Bezprozvanny, Grigory K.; and Shturman, Yakov P., 261,900, Cl. D18-25.000.
Singletary, Buckley A.: *See*—
  Masterson, Oliver W.; Harrison, Charles A.; and Singletary, Buckley A., 261,851, Cl. D32-18.000.
SL Container Corporation: *See*—
  Dunchock, Richard S., 261,827, Cl. D3-40.000.
Smith, Daniel. Spatula. 261,933, 11-17-81, Cl. D24-23.000.
Smith, Drew R. Identification label. 261,905, 11-17-81, Cl. D20-27.000.
Societe Generale de Fonderie: *See*—
  Primault, Andre, 261,929, Cl. D23-61.000.
Sonder, Richard; and Russo, Joseph L., to Thonet Industries, Inc. Overbed table. 261,837, 11-17-81, Cl. D6-138.000.
Southerland, James A.: *See*—
  Heatwole, Richard, 261,909, Cl. D21-66.000.
Sprague, James M. Bathtub. 261,927, 11-17-81, Cl. D23-55.000.
Stebbins, Harris A. Combined swivel seat and storage box or the like. 261,834, 11-17-81, Cl. D6-64.000.
Stegmaier, Sigurd: *See*—
  Berman, James S.; and Stegmaier, Sigurd, 261,838, Cl. D6-157.000.
Steinberg, Alan M., to Gordy International Incorporated. Simulative bubble blower. 261,908, 11-17-81, Cl. D21-61.000.
Stoddard, John: *See*—
  Beadle, Anthony C.; Mintern, Keith E.; and Stoddard, John, 261,884, Cl. D14-106.000.
Stone, Orison W., to Pack Image, Inc. Carrier for bottles or the like. 261,944, 11-17-81, Cl. D9-346.000.
Sumiyasu, Noriaki, to TDK Electronics Co., Ltd. Medical magnetic pad. 261,936, 11-17-81, Cl. D24-99.000.
Sunbeam Plastics Corporation: *See*—
  Abramo, Ralph J., 261,864, Cl. D9-378.000.
Sutton, Lawrence R.; and Ranno, Carl P. Tackless carpet stripping. 261,859, 11-17-81, Cl. D8-389.000.
Sweet, Lawrence A., to Minnesota Mining and Manufacturing Company. Hardhat respirator hood. 261,942. 11-17-81, Cl. D29-7.000.
Takeshi Yagi: *See*—
  Yamanaka, Minoru, 261,820, Cl. D1-3.000.
TDK Electronics Co., Ltd.: *See*—
  Sumiyasu, Noriaki, 261,936, Cl. D24-99.000.
Tecnol, Inc.: *See*—
  Hubbard, Vance M.; and Brunson, Welton K., 261,821, Cl. D2-27.000.

Tenex Corporation: *See—*
Polhemus, Marlan H., 261,904, Cl. D19-92.000.

Tenzer, Abraham I., to Dart Industries Inc. Container for soil-free plant growth medium. 261,874, 11-17-81, Cl. D11-143.000.

Thompson, Dennis M.; and Thompson, George E., III, to Ursus Enterprises Ltd. Refrigerator wine rack. 261,891, 11-17-81, Cl. D15-89.000.

Thompson, George E., III: *See—*
Thompson, Dennis M.; and Thompson, George E., III, 261,891, Cl. D15-89.000.

Thonet Industries, Inc.: *See—*
Sonder, Richard; and Russo, Joseph L., 261,837, Cl. D6-138.000.

Tokai Metals Co., Ltd.: *See—*
Yamamoto, Hiroaki, 261,847, Cl. D7-9.000.

Tomy Kogyo Co., Inc.: *See—*
Mayuzumi, Masaki, 261,911, Cl. D21-104.000.

Trigonal Arredamento Bagno di Mornaghini Franco & C. s.a.s.: *See—*
Mornaghini, Franco, 261,928, Cl. D23-59.000.

Tulipani, Victor J., to Peregrine Industries, Incorporated. Bath tub of wood. 261,926, 11-17-81, Cl. D23-55.00X.

Ursus Enterprises Ltd.: *See—*
Thompson, Dennis M.; and Thompson, George E., III, 261,891, Cl. D15-89.000.

Utilis Mullhelm Aktiengesellschaft: *See—*
Huser, J. P., 261,892, Cl. D15-99.000.

Vahlenbreder, Aribert: *See—*
Envall, Bjorn E. A.; and Vahlenbreder, Aribert, 261,879, Cl. D12-211.000.

Valli & Colombo S.p.A.: *See—*
Valli, Pasquale, 261,857, Cl. D8-301.000.

Valli, Pasquale, to Valli & Colombo S.p.A. Combined door lever and escutcheon unit. 261,857, 11-17-81, Cl. D8-301.000.

Wachtel, Jean L., to Celluloid S.A. Combined double sided mirror and support therefor. 261,845, 11-17-81, Cl. D6-233.000.

Wall, William O. Portable sun visor attachment for a seat or similar article. 261,843, 11-17-81, Cl. D6-191.000.

Webb, Carol C. Holder for tissues. 261,826, 11-17-81, Cl. D3-39.000.

Welch, Donald E. Simulative trundle toy. 261,913, 11-17-81, Cl. D21-150.000.

Wruck, Keith R.: *See—*
Reiner, Norbert L.; Wruck, Keith R.; and Amici, F. Robert, 261,881, Cl. D13-11.000.

Yakult Honsha Co., Ltd.: *See—*
Matsumoto, Tetsuo, 261,866, Cl. D9-432.000.

Yamaha Hatsudoki Kabushiki Kaisha: *See—*
Ishiyama, Atsushi, 261,876, Cl. D12-110.000.

Yamamoto, Hiroaki, to Tokai Metals Co., Ltd. Folding cup. 261,847, 11-17-81, Cl. D7-9.000.

Yamanaka, Minoru, to Takeshi Yagi. Combined hot dog and bun. 261,820, 11-17-81, Cl. D1-3.000.

Yonezawa Toys Co. Ltd.: *See—*
Sato, Sanji, 261,906, Cl. D21-12.000.

Zigmont, Clifford V. Hanging lounge seat for a spa. 261,832, 11-17-81, Cl. D6-53.000.

LIST OF PLANT PATENTEES

Anderson, Frederic W. Nectarine tree. 4,790, 11-17-81, Cl. 41.000.

Anderson, Frederic W. Nectarine tree. 4,791, 11-17-81, Cl. 41.000.

Anderson, Frederic W. Nectarine tree. 4,792, 11-17-81, Cl. 41.000.

CLASSIFICATION OF PATENTS

ISSUED NOVEMBER 17, 1981

NOTE.—First number, class; second number, subclass; third number, patent number

CLASS 2	
206	4,300,240
400	4,300,241
412	4,300,242
CLASS 3	
1	4,300,243
1.4	4,300,244
18	4,300,245
CLASS 4	
490	4,300,246
598	4,300,247
628	4,300,248
661	4,300,249
CLASS 6	
1	4,300,250
CLASS 8	
111	4,300,897
149.1	4,300,251
185	4,300,898
455	4,300,899
524	4,300,900
527	4,300,901
529	4,300,902
531	4,300,903
532	4,300,904
CLASS 9	
1.2	4,300,252
1.5	4,300,253
8 R	4,300,254
309	4,300,255
CLASS 12	
142 F	4,300,256
CLASS 13	
32	4,301,320
CLASS 15	
93 A	4,300,257
210 R	4,300,258
250.32	4,300,259
339	4,300,260
345	4,300,261
387	4,300,262
CLASS 17	
45	4,300,263
51	4,300,264
CLASS 19	
112	4,300,265
113	4,300,266
200	4,300,267
CLASS 23	
230 A	4,300,906
	4,300,909
230 B	4,300,905
	4,300,907
230 R	4,300,908
232 R	4,300,910
300	4,300,911
CLASS 24	
67 R	4,300,268
134 R	4,300,269
274 R	4,300,270
CLASS 29	
1 A	4,300,271
25.35	4,300,272
78	Re.30,794
156.4 R	4,300,273
156.5 A	4,300,274
157.3 C	4,300,275
234	4,300,276
450	4,300,277
568	4,300,278
571	4,300,279
611	4,300,280
623	4,300,281
751	4,300,282
766	4,300,283
860	4,300,284
CLASS 30	
41	4,300,285
113.3	4,300,286
289	4,300,287
409	4,300,288
CLASS 33	
137 R	4,300,289
392	4,300,290
CLASS 34	
10	4,300,291
108	4,300,292
	4,300,293
CLASS 36	
97	4,300,294
CLASS 37	
43 D	4,300,295
CLASS 38	
17	4,300,296
CLASS 40	
20 R	4,300,297
430	4,300,298
607	4,300,299
610	4,300,300
CLASS 42	
70 E	4,300,301
73	4,300,302
CLASS 43	
24	4,300,303
44.87	4,300,304
81	4,300,305
112	4,300,306
CLASS 44	
36	4,300,912
CLASS 46	
154	4,300,307
206	4,300,308
CLASS 47	
48.5	4,300,309
58	4,300,310
62	4,300,311
72	4,300,312
CLASS 48	
67	4,300,913
76	4,300,914
197 R	4,300,915
210	4,300,916
213	4,300,917
CLASS 49	
	4,300,316
445	4,300,313
463	4,300,314
470	4,300,315
CLASS 51	
284 E	4,300,317
425	4,300,318
CLASS 52	
11	4,300,319
173 R	4,300,320
223 R	4,300,321
406	4,300,322
464	4,300,323
612	4,300,324
CLASS 53	
143	4,300,325
211	4,300,326
258	4,300,327
492	4,300,328
506	4,300,329
539	4,300,330
573	4,300,331
CLASS 55	
1	4,300,918
48	4,300,919
84	4,300,920
96	4,300,921
146	4,300,922
196	4,300,923
210	4,300,924
242	4,300,925
319	4,300,926
378	4,300,927
385 R	4,300,928
CLASS 56	
11.3	4,300,332
14.5	4,300,333
17.4	4,300,334
119	4,300,335
295	4,300,336
376	4,300,337
CLASS 57	
3	4,300,338
38.34	4,300,339
80	4,300,340
	4,300,341
81	4,300,342
251	4,300,343
288	4,300,344
290	4,300,345
CLASS 59	
79 R	4,300,346
CLASS 60	
39.28 R	4,300,347
	4,300,348
39.51 R	4,300,349
528	4,300,350
560	4,300,351
567	4,300,352
618	4,300,353
CLASS 62	
45	4,300,354
48	4,300,355
50	4,300,356
239	4,300,357
256	4,300,358
379	4,300,359
514 R	4,300,360
CLASS 64	
17 R	4,300,361
	4,300,362
27 NM	4,300,363
28 R	4,300,364
CLASS 65	
2	4,300,929
3.11	4,300,930
4.3	4,300,931
14	4,300,932
60.1	4,300,933
	4,300,934
107	4,300,935
114	4,300,936
	4,300,937
182.4	4,300,938
CLASS 66	
176	4,300,365
CLASS 68	
3 R	4,300,366
5 D	4,300,367
CLASS 70	
16	4,300,368
54	4,300,369
	4,300,370
58	4,300,371
213	4,300,372
232	4,300,373
389	4,300,374
CLASS 71	
25	4,300,939
27	4,300,940
65	4,300,941
87	4,300,942
	4,300,943
94	4,300,944
95	4,300,945
CLASS 72	
45	4,300,375
201	4,300,376
250	4,300,377
253.1	4,300,378
258	4,300,379
306	4,300,380
327	4,300,381
478	4,300,382
CLASS 73	
11	4,300,383
23	4,300,384
	4,300,385
38	4,300,386
49.2	4,300,388
167	4,300,389
178 R	4,300,390
204	4,300,391
362 AR	4,300,392
460	4,300,387
597	4,300,394
708	4,300,395
728	4,300,396
818	4,300,397
849	4,300,398
861.04	4,300,399
861.28	4,300,400
861.31	4,300,401
861.54	4,300,402
862.07	4,300,403
863.11	4,300,393
863.52	4,300,404
CLASS 74	
44	4,300,405
54	4,300,406
493	4,300,407
501 R	4,300,408
512	4,300,409
579 R	4,300,410
594.2	4,300,411
CLASS 75	
0.5 B	4,300,946
0.5 R	4,300,947
34	4,300,948
73	4,300,949
123 B	4,300,950
236	4,300,951
238	4,300,952
256	Re.30,795
CLASS 81	
53 R	4,300,412
62	4,300,413
64	4,300,414
128	4,300,415
463	4,300,416
CLASS 82	
1 C	4,300,417
36 A	4,300,418
44	4,300,419
CLASS 83	
92	4,300,420
99	4,300,421
	4,300,422
165	4,300,423
374	4,300,424
468	4,300,425
471.3	4,300,426
519	4,300,427
574	4,300,428
651.1	4,300,429
CLASS 84	
1.01	4,300,430
	4,300,431
	4,300,432
1.17	4,300,433
1.19	4,300,434
	4,300,435
345	4,300,436
411 R	4,300,437
422 S	4,300,438
CLASS 92	
146	4,300,439
CLASS 98	
37	4,300,440
40 C	4,300,441
CLASS 99	
289 R	4,300,442
332	4,300,443
448	4,300,444
458	4,300,445
461	4,300,446
516	4,300,447
	4,300,448
CLASS 100	
98 R	4,300,449
CLASS 101	
364	4,300,450
CLASS 102	
223	4,300,451
270	4,300,452
307	4,300,453
CLASS 105	
168	4,300,454
CLASS 106	
309	4,300,954
CLASS 108	
156	4,300,455
CLASS 110	
102	4,300,456
171	4,300,457
263	4,300,458
	4,300,459
346	4,300,460
CLASS 111	
6	4,300,461
34	4,300,462
CLASS 112	
225	4,300,463
254	4,300,464
255	4,300,465
CLASS 114	
244	4,300,466
303	4,300,467
340	4,300,468
CLASS 116	
209	4,300,469
332	4,300,470
CLASS 118	
235	4,300,471
245	4,300,472
263	4,300,473
641	4,300,474
657	4,300,475
694	4,300,476
CLASS 119	
2	4,300,477
5	4,300,478
15.6	4,300,479
CLASS 122	
121	4,300,480
406 B	4,300,481
CLASS 123	
23	4,300,482
25 J	4,300,483
	4,300,484
	4,300,485
39	4,300,486
44 C	4,300,487
52 M	4,300,488
73 AD	4,300,489
179 BG	4,300,491
188 AA	4,300,492
192 B	4,300,493
193 H	4,300,494
198 B	4,300,495
198 E	4,300,496
254	4,300,497
263	4,300,498
307	4,300,499
308	4,300,500
339	4,300,501
389	4,300,502
425	4,300,503
432	4,300,504
439	4,300,490
445	4,300,505
478	4,300,506
489	4,300,507
490	4,300,508
499	4,300,509
512	4,300,510
520	4,300,511
536	4,300,512
545	4,300,513
557	4,300,514
568	4,300,515
571	4,300,516
575	4,300,517
609	4,300,518
647	4,300,519
CLASS 124	
9	4,300,520
23 R	4,300,521
CLASS 125	
11 R	4,300,522
CLASS 126	
21 A	4,300,523
39 R	4,300,524
42	4,300,525
67	4,300,526
112	4,300,527
140	4,300,528
152 B	4,300,529
415	4,300,530
417	4,300,531
	4,300,532
425	4,300,533
432	4,300,534
	4,300,535
435	4,300,536
437	4,300,537
438	4,300,538
448	4,300,539
452	4,300,540
CLASS 128	
18	4,300,541
87 R	4,300,542
89 R	4,300,543
127	4,300,544
200.14	4,300,545
200.16	4,300,546
202.26	4,300,547
204.21	4,300,548
206.19	4,300,549
207.18	4,300,550
214 E	4,300,552
214 R	4,300,551
214.4	4,300,553
218 A	4,300,554
248	4,300,555
256	4,300,556
260	4,300,557
	4,300,558
272	4,300,559
283	4,300,560
285	4,300,561
287	4,300,562
	4,300,563
321	4,300,564
335.5	4,300,565
419 D	4,300,567
419 PG	4,300,566
509	4,300,568
654	4,300,569
665	4,300,570
673	4,300,571
674	4,300,572
686	4,300,573
734	4,300,574
798	4,300,575
CLASS 131	
290	4,300,579
330	4,300,578
334	4,300,577
335	4,300,576
CLASS 133	
7	4,300,580
CLASS 134	
2	Re.30,796
3	4,300,955
57 R	4,300,581
CLASS 135	
20 R	4,300,582
CLASS 136	
246	4,301,321
256	4,301,322
261	4,301,323
CLASS 137	
101	4,300,583
106	4,300,584

107	4,300,585
110	4,300,586
117	4,300,587
185	4,300,588
312	4,300,589
413	4,300,590
493.4	4,300,591
505.25	4,300,592
512.15	4,300,593
625.21	4,300,594
625.33	4,300,595
836	4,300,596
CLASS 138	
89	4,300,597
177	4,300,598
CLASS 139	
352	4,300,599
CLASS 141	
10	4,300,600
94	4,300,601
103	4,300,602
238	4,300,603
CLASS 144	
41	4,300,604
193 A	4,300,605
CLASS 145	
2 R	4,300,606
62	4,300,607
CLASS 148	
6.3	4,300,956
6.31	4,300,957
120	4,300,958
127	4,300,959
171	4,300,960
CLASS 149	
10	4,300,961
47	4,300,962
CLASS 150	
12	4,300,608
29	4,300,609
40	4,300,610
51	4,300,611
32 R	4,300,612
CLASS 152	
159	4,300,613
347	4,300,614
357 R	4,300,615
CLASS 156	
82	4,300,963
110 A	4,300,964
154	4,300,965
156	4,300,966
164	4,300,967
181	4,300,968
244.11	4,300,969
	4,300,970
	4,300,971
307.5	4,300,972
307.7	4,300,973
360	4,300,974
456	4,300,975
502	4,300,976
515	4,300,977
581	4,300,978
623 R	4,300,979
626	4,300,980
CLASS 162	
109	4,300,981
358	4,300,982
CLASS 164	
124	4,300,616
244	4,300,617
433	4,300,618
448	4,300,619
452	4,300,620
485	4,300,621
CLASS 165	
1	4,300,622
16	4,300,623
32	4,300,624
95	4,300,625
96	4,300,626
137	4,300,627
149	4,300,628
151	4,300,629
181	4,300,630
CLASS 166	
187	4,300,631
246	4,300,632
250	4,300,633
272	4,300,634
274	4,300,635
334	4,300,636
336	4,300,637

CLASS 172	
10	4,300,638
49.5	4,300,639
311	4,300,640
CLASS 173	
12	4,300,641
CLASS 174	
68.5	4,301,324
76	4,301,325
CLASS 175	
173	4,300,642
244	4,300,643
CLASS 177	
145	4,300,644
211	4,300,645
212	4,300,646
	4,300,647
229	4,300,648
CLASS 178	
18	4,301,326
22.10	4,301,327
CLASS 179	
1 A	4,301,330
1 E	4,301,332
1 GC	4,301,331
1 SA	4,301,328
	4,301,329
15.55 R	4,301,333
16 AA	4,301,334
84 L	4,301,335
170 NC	4,301,336
CLASS 180	
55	4,300,649
142	4,300,650
256	4,300,651
336	4,300,652
CLASS 181	
107	4,300,653
120	4,300,654
167	4,300,655
214	4,300,656
CLASS 182	
38	4,300,657
CLASS 184	
7 E	4,300,658
CLASS 187	
8.59	4,300,659
29 R	4,300,660
	4,300,661
	4,300,662
	4,300,663
CLASS 188	
265	4,300,664
CLASS 191	
12.4	4,300,665
23 A	4,300,666
CLASS 192	
36	4,300,667
53 F	4,300,668
69 B	4,300,669
106.1	4,300,670
CLASS 198	
345	4,300,671
486	4,300,672
611	4,300,673
CLASS 200	
5 A	4,301,337
61.41	4,301,338
146 R	4,301,339
147 R	4,301,340
	4,301,341
153 SC	4,301,342
283	4,301,343
314	4,301,344
	4,301,345
320	4,301,346
CLASS 201	
10	4,300,985
CLASS 202	
241	4,300,986
CLASS 204	
129	4,300,987
159.2	4,300,988
164	4,300,989
195 S	4,300,990
	4,300,991
242	4,300,992
290 R	4,300,993

CLASS 206	
45.14	4,300,674
252	4,300,675
264	4,300,676
279	4,300,687
286	4,300,688
319	4,300,677
364	4,300,678
424	4,300,679
427	4,300,680
428	4,300,681
461	4,300,682
483	4,300,683
493	4,300,684
499	4,300,685
506	4,300,686
CLASS 208	
8 LE	4,300,994
	4,300,995
10	4,300,996
120	4,300,997
127	4,300,998
212	4,300,999
CLASS 209	
17	4,301,000
	4,301,001
143	4,301,002
166	4,301,003
	4,301,004
524	4,300,689
CLASS 210	
90	4,301,005
96.1	4,301,006
	4,301,007
242.3	4,301,008
278	4,301,009
406	4,301,010
447	4,301,011
457	4,301,012
637	4,301,013
721	4,301,014
777	4,301,015
CLASS 211	
4	4,300,690
49 D	4,300,693
87	4,300,692
131	4,300,691
CLASS 217	
43 R	4,300,694
CLASS 219	
10.55 F	4,301,347
61.2	4,301,348
69 R	4,301,350
69 W	4,301,349
74	Re.30,799
114	4,301,351
121 ED	4,301,354
121 LJ	4,301,353
121 PR	4,301,352
137 PS	4,301,355
213	4,301,356
229	4,301,357
388	4,301,358
469	4,301,359
CLASS 220	
6	4,300,695
18	4,300,696
19	4,300,697
85 R	4,300,698
86 R	4,300,699
257	4,300,700
289	4,300,701
292	4,300,702
CLASS 221	
187	4,300,703
301	4,300,704
CLASS 222	
131	4,300,705
CLASS 224	
31	4,300,706
155	4,300,707
253	4,300,708
275	4,300,709
CLASS 226	
74	4,300,710
97	4,300,711
157	4,300,712
190	4,300,713
196	4,300,714
CLASS 228	
180 A	4,300,715
CLASS 229	
37 R	4,300,716

CLASS 233	
1 A	4,300,717
CLASS 235	
92 T	4,301,360
484	4,301,361
CLASS 236	
34.5	4,300,718
53	4,300,719
CLASS 237	
12.3 A	4,300,720
CLASS 238	
2	4,300,721
14	4,300,722
CLASS 239	
499	4,300,723
654	4,300,724
684	4,300,725
CLASS 241	
101.7	4,300,726
CLASS 242	
2	4,300,727
18 A	4,300,728
74.1	4,300,729
84.2 R	4,300,730
107.2	4,300,731
107.3	4,300,732
107.4 A	4,300,733
170	4,300,734
201	4,300,735
CLASS 244	
3.13	4,300,736
158 R	4,300,737
CLASS 248	
62	4,300,738
219.4	4,300,739
238	4,300,740
289.1	4,300,741
360	4,300,742
441 R	4,300,743
447	4,300,744
546	4,300,745
CLASS 249	
13	4,300,746
217	4,300,747
CLASS 250	
211 J	4,301,362
216	4,301,363
272	4,301,364
308	4,301,365
	4,301,366
370	4,301,367
385	4,301,368
423 R	4,301,369
435	4,301,370
443	4,301,371
461 R	4,301,372
560	4,301,373
566	4,301,374
CLASS 251	
5	4,300,748
124	4,300,749
323	4,300,750
CLASS 252	
8.5 C	4,301,016
8.6	4,301,017
	4,301,018
49.6	4,301,019
62.62	4,301,020
98	4,301,021
174.11	4,301,022
299.7	4,301,023
301.31	4,301,024
389 A	4,301,025
400 R	4,301,026
408	4,301,027
	4,301,028
429 B	4,301,029
435	4,301,030
	4,301,031
443	4,301,032
448	4,301,033
452	4,301,034
455 R	4,301,035
458	4,301,036
462	4,301,037
468	4,301,038
477 R	4,301,039
511	4,301,040
	4,301,041
521	4,301,042
522 A	4,301,043
545	4,301,044

CLASS 254	
2 R	4,300,751
CLASS 256	
73	4,300,752
CLASS 260	
8	4,301,045
16	4,301,046
17.4 R	4,301,047
22 CQ	4,301,048
23 AR	4,301,049
28 R	4,301,050
28.5 AS	4,301,051
29.2 TN	4,301,052
	4,301,053
29.4 UA	4,301,054
33.6 R	4,301,055
37 N	4,301,057
37 SB	4,301,056
40 R	4,301,058
42.18	4,301,059
42.49	4,301,060
45.75 B	4,301,062
45.8 N	4,301,061
45.85 S	4,301,063
112 R	4,301,064
112.5 LH	4,301,066
112.5 R	4,301,065
	4,301,067
152	4,301,068
	4,301,069
155	4,301,070
158	4,301,071
239.1	4,301,072
239.3 A	4,301,073
245.2 R	4,301,074
326.5 FM	4,301,075
345.2	4,301,076
346.11	4,301,077
346.22	4,301,078
	4,301,079
347.2	4,301,081
371	4,301,080
373	4,301,082
404	4,301,083
405.6	4,301,084
429.7	4,301,085
438.1	4,301,086
463	4,301,087
465 F	4,301,088
465.1	4,301,089
465.4	4,301,090
505 R	4,301,091
544 Y	4,301,092
CLASS 261	
1	4,301,093
29	4,301,094
30	4,301,095
41 B	4,301,096
109	4,301,097
114 R	4,301,098
CLASS 264	
25	4,301,099
40.5	4,301,100
130	4,301,101
151	4,301,102
166	4,301,103
168	4,301,104
205	4,301,105
	4,301,106
206	4,301,107
	4,301,108
219	4,301,109
328.14	4,301,110
515	4,301,111
564	4,301,112
CLASS 266	
196	4,300,753
CLASS 269	
8	4,300,754
87.2	4,300,755
CLASS 271	
8 R	4,300,756
207	4,300,757
225	4,300,758
CLASS 272	
116	4,300,759
120	4,300,760
134	4,300,761
CLASS 273	
1 E	4,300,763
1 GC	4,300,762
1.5 R	4,300,764
26 C	4,300,765
61 R	4,300,767
85 R	4,300,766
129 V	4,300,769
238	4,300,770
260	4,300,768

329	4,300,771
CLASS 277	
3	4,300,772
11	4,300,773
12	4,300,774
34.3	4,300,775
124	4,300,776
153	4,300,777
	4,300,778
235 B	4,300,779
CLASS 279	
1 L	4,300,780
CLASS 280	
11.2	4,300,781
47.11	4,300,782
87.02 R	4,300,783
255	4,300,784
432	4,300,785
602	4,300,786
704	4,300,787
748	4,300,788
801	4,300,789
CLASS 282	
9 R	4,300,790
CLASS 283	
38	4,300,791
CLASS 285	
112	4,300,792
CLASS 290	
1 R	4,301,375
36 R	4,301,376
43	4,301,377
CLASS 292	
205	4,300,793
247	4,300,794
257	4,300,795
339	4,300,796
CLASS 296	
164	4,300,797
CLASS 297	
184	4,300,798
487	4,300,799
CLASS 299	
2	4,300,800
5	4,300,801
64	4,300,802
CLASS 301	
5 B	4,300,803
105 B	4,300,804
CLASS 303	
22 R	4,300,805
CLASS 307	
115	4,301,378
290	4,301,379
362	4,301,380
475	4,301,381
477	4,301,382
585	4,301,383
CLASS 308	
9	4,300,806
10	4,300,807
76	4,300,808
CLASS 310	
11	4,301,384
	4,301,385
59	4,301,386
CLASS 312	
305	4,300,809
CLASS 313	
355	4,301,387
398	4,301,388
411	4,301,389
CLASS 315	
82	4,301,390
111.31	4,301,391
241 P	4,301,392
367	4,301,393
408	4,301,394
CLASS 318	
314	4,301,395
490	4,301,396
625	4,301,397
CLASS 320	
21	4,301,398
CLASS 324	
34	4,301,399
58.5 A	4,301,400

61 R	4,301,401
62	4,301,402
	4,301,403
77 B	4,301,404
78 D	4,301,405
95	4,301,406
96	4,301,407
161	4,301,408
158 D	4,301,409
307	4,301,410
	4,301,411
438	4,301,413
442	4,301,412
446	4,301,414
CLASS 328	
24	4,301,415
71	4,301,416
CLASS 329	
50	4,301,417
CLASS 330	
62	4,301,418
107	4,301,419
126	4,301,420
253	4,301,421
CLASS 331	
1 A	4,301,422
1 R	4,301,423
94.5 F	4,301,426
	4,301,425
111	4,301,427
CLASS 333	
12	4,301,428
22 R	4,301,429
24.1	4,301,430
141	4,301,431
164	4,301,432
CLASS 335	
13	4,301,433
20	4,301,434
26	4,301,435
166	4,301,436
CLASS 336	
60	4,301,437
CLASS 337	
339	4,301,438
CLASS 338	
195	4,301,439
CLASS 339	
74 R	4,300,810
CLASS 340	
59	4,301,440
64	4,301,441
	4,301,442
146.3 MA	4,301,443
347 AD	4,301,446
365 P	4,301,447
392	4,301,448
525	4,301,449
715	4,301,450
781	4,301,451
825.54	4,301,445
870.02	4,301,444
CLASS 343	
5 EM	4,301,452
9 R	4,301,453
18 E	4,301,454
106 D	4,301,455
708	4,301,456
770	4,301,457
800	4,301,458
CLASS 346	
140 R	4,301,459
	4,301,460
CLASS 350	
1.1	4,300,811
42	4,300,812
96.10	4,300,813
96.12	4,300,814
96.20	4,300,815
96.33	4,300,816
412	4,300,817
CLASS 351	
7	4,300,818
41	4,300,819
160 H	4,300,820

163	4,300,821
CLASS 352	
130	4,300,822
CLASS 354	
25	4,300,823
	4,300,824
34	4,300,825
60 L	4,300,826
293	4,300,827
322	4,300,828
CLASS 355	
3 SH	4,300,830
14 R	4,300,829
67	4,300,831
106	4,300,832
CLASS 356	
307	4,300,833
316	4,300,834
334	4,300,835
376	4,300,836
CLASS 357	
17	4,301,461
30	4,301,462
	4,301,463
70	4,301,464
82	4,301,465
CLASS 358	
13	4,301,466
41	4,301,467
44	Re.30,800
64	4,301,468
75	4,301,469
101	4,301,470
105	4,301,471
163	4,301,472
166	4,301,473
171	4,301,474
181	4,301,475
209	4,301,476
213	4,301,477
227	4,301,478
237	4,301,479
CLASS 360	
8	4,301,480
62	4,301,481
72.1	4,301,482
96.3	4,301,483
96.5	4,301,485
96.6	4,301,484
99	4,301,486
107	4,301,487
132	4,301,488
CLASS 361	
9	4,301,489
89	4,301,490
93	4,301,491
283	4,301,492
355	4,301,493
415	4,301,494
	4,301,495
CLASS 363	
17	4,301,496
21	4,301,497
25	4,301,498
26	4,301,499
58	4,301,500
62	4,301,501
79	4,301,502
CLASS 364	
200	4,301,503
	4,301,504
	4,301,505
436	4,301,506
464	4,301,507
483	4,301,508
537	4,301,509
567	4,301,510
709	4,301,511
801	4,301,512
900	4,301,513
	4,301,514
	4,301,515
CLASS 365	
15	4,301,516
16	4,301,517
185	4,301,518
189	4,301,519
	4,301,520

CLASS 366	
25	4,300,837
84	4,300,838
85	4,300,839
88	4,300,840
98	4,300,841
99	4,300,842
125	4,300,843
CLASS 367	
78	4,301,521
123	4,301,522
	4,301,523
CLASS 368	
261	4,301,524
CLASS 369	
29	4,301,525
33	4,301,526
45	4,301,527
221	4,301,528
267	4,301,529
CLASS 370	
18	4,301,530
62	4,301,531
85	4,301,532
104	4,301,533
105	4,301,534
CLASS 371	
21	4,301,535
22	4,301,536
CLASS 375	
1	4,301,537
4	4,301,538
107	4,301,539
CLASS 376	
280	4,300,983
459	4,300,984
CLASS 400	
120	4,300,844
124	4,300,845
	4,300,846
196.1	4,300,847
CLASS 402	
13	4,300,848
CLASS 403	
11	4,300,849
245	4,300,850
319	4,300,851
385	4,300,852
CLASS 404	
92	4,300,853
CLASS 405	
1	4,300,854
61	4,300,855
66	4,300,856
70	4,300,857
100	4,300,858
259	4,300,859
263	4,300,860
264	4,300,861
CLASS 407	
53	4,300,862
CLASS 409	
109	4,300,863
CLASS 410	
154	4,300,864
CLASS 411	
15	4,300,865
135	4,300,866
CLASS 414	
493	4,300,867
CLASS 415	
137	4,300,868
160	4,300,869
CLASS 417	
53	4,300,870
331	4,300,871
360	4,300,872
416	4,300,873
CLASS 418	
54	4,300,874

55	4,300,875
CLASS 422	
2	4,301,113
52	4,301,114
56	4,301,115
65	4,301,116
99	4,301,117
101	4,301,118
133	4,301,119
249	4,301,120
CLASS 423	
1	4,301,121
17	4,301,122
20	4,301,123
24	4,301,124
150	4,301,125
240	4,301,126
242	4,301,127
	4,301,128
284	4,301,129
320	4,301,130
321 R	4,301,131
345	4,301,132
442	4,301,133
446	4,301,134
447.4	4,301,135
447.8	4,301,136
481	4,301,137
495	4,301,138
CLASS 424	
1	4,301,139
1.5	4,301,140
7	4,301,141
8	4,301,142
57	4,301,143
78	4,301,144
80	4,301,145
	4,301,146
93	4,301,147
	4,301,148
114	4,301,149
128	4,301,150
177	4,301,151
182	4,301,152
183	4,301,153
200	4,301,154
	4,301,155
	4,301,156
218	4,301,157
228	4,301,158
230	4,301,159
241	4,301,160
246	4,301,161
263	4,301,162
	4,301,163
	4,301,164
269	4,301,165
	4,301,166
270	4,301,167
272	4,301,168
273 B	4,301,171
273 R	4,301,169
	4,301,170
275	4,301,172
288	4,301,173
300	4,301,174
305	4,301,175
318	4,301,176
319	4,301,177
CLASS 425	
66	4,300,876
67	4,300,877
114	4,300,878
CLASS 426	
5	4,301,178
19	4,301,179
250	4,301,180
	4,301,181
	4,301,182
482	4,301,183
534	4,301,184
546	4,301,185
CLASS 427	
45.1	4,301,187
54.1	4,301,186
88	4,301,188
	4,301,191
96	4,301,189
97	4,301,190
	4,301,192
140	4,301,193
154	4,301,194
261	4,301,195

288	Re.30,797
305	4,301,196
353	4,301,197
CLASS 428	
2	4,301,198
14	4,301,199
33	4,301,200
36	4,301,201
50	4,301,202
105	4,301,203
110	4,301,204
127	4,301,205
193	4,301,206
241	4,301,207
334	4,301,208
339	4,301,209
342	4,301,210
385	4,301,211
412	4,301,212
419	4,301,213
446	4,301,214
447	4,301,215
476.3	4,301,216
528	4,301,217
CLASS 429	
42	4,301,218
57	4,301,219
197	4,301,220
218	4,301,221
251	4,301,222
CLASS 430	
17	4,301,223
58	4,301,224
66	4,301,225
72	4,301,226
106	4,301,227
122	4,301,228
158	4,301,229
273	4,301,230
287	4,301,231
300	4,301,232
314	4,301,233
325	4,301,234
387	4,301,235
393	4,301,236
394	4,301,237
495	4,301,238
510	4,301,239
537	4,301,240
569	4,301,241
	4,301,242
613	4,301,243
CLASS 432	
14	4,300,879
138	4,300,880
241	4,300,881
247	4,300,882
CLASS 433	
49	4,300,883
74	4,300,884
151	4,300,885
202	4,300,886
CLASS 434	
132	4,300,887
CLASS 435	
4	4,301,244
	4,301,245
58	4,301,246
104	4,301,247
119	4,301,248
235	4,301,249
241	4,301,250
267	4,301,251
290	4,301,252
CLASS 440	
62	4,300,888
69	4,300,889
CLASS 468	
180	4,301,540
221	4,301,541
353	4,301,542
612	4,301,543
CLASS 474	
110	4,300,890
CLASS 493	
8	4,300,891
193	4,300,892
494	4,300,893
210	4,300,894

416	4,300,895
419	4,300,896
CLASS 501	
112	4,300,953
CLASS 518	
700	4,301,233
CLASS 521	
154	4,301,234
CLASS 525	
92	4,301,255
247	4,301,256
329	4,301,257
334	4,301,258
	4,301,259
348	4,301,260
507	4,301,261
509	4,301,262
CLASS 526	
68	4,301,263
86	4,301,264
140	4,301,265
212	4,301,266
313	4,301,267
CLASS 528	
26	4,301,268
34	4,301,269
64	4,301,270
85	4,301,271
183	4,301,272
230	4,301,273
388	4,301,274
500	4,301,275
CLASS 536	
4	4,301,276
17 A	4,301,277
CLASS 544	
80	4,301,281
90	4,301,282
92	4,301,283
016	4,301,278
	4,301,279
	4,301,280
106	4,301,284
138	4,301,285
211	4,301,286
CLASS 546	
19	4,301,287
94	4,301,288
	4,301,289
143	4,301,290
153	4,301,291
CLASS 548	
239	4,301,292
377	4,301,293
CLASS 560	
53	4,301,294
62	4,301,295
152	4,301,296
217	4,301,297
218	4,301,298
CLASS 564	
67	4,301,299
92	4,301,300
406	Re.30,798
CLASS 568	
17	4,301,301
373	4,301,302
375	4,301,303
637	4,301,304
719	4,301,311
727	4,301,305
734	4,301,306
771	4,301,307
804	4,301,308
826	4,301,309
863	4,301,310
902	4,301,312
CLASS 570	
128	4,301,313
253	4,301,314
CLASS 585	
304	4,301,315
455	4,301,316
	4,301,317
526	4,301,318
638	4,301,319

CLASSIFICATION OF DESIGNS

D1—	3	261,820
D2—	27	261,821
	40	261,822
	309	261,823
	433	261,824
D3—	39	261,825
		261,826
	40	261,827
D6—	7	261,828
	24	261,829
	37	261,830
	48	261,831
	53	261,832
	57	261,833
	64	261,834
	73	261,835
	132	261,836
	138	261,837
	157	261,838
	177	261,839
		261,840
	179	261,841
	186	261,842
	191	261,843
		261,844
	233	261,845
	237	261,846
D7—	9	261,847
	45	261,848
	123	261,849
	129	261,850
	207	261,852
D8—	01	261,853
	40	261,854
	98	261,855
	301	261,856
		261,857
	331	261,858
	389	261,859
	395	261,860
D9—	305	261,861
	319	261,862
	346	261,944
	353	261,863
	378	261,864
	389	261,865
	432	261,866
	438	261,867
		261,868
D10—	16	261,869
	75	261,870
	81	261,871
D11—	70	261,872
	131	261,873
	143	261,874
	181	261,875
D12—	110	261,876
	141	261,877
	147	261,878
	211	261,879
		261,880
D13—	11	261,881
D14—	14	261,882
	33	261,883
	94	261,886
	96	261,887
	99	261,888
	106	261,884
		261,885
D15—	27	261,889
	82	261,890
	89	261,891
	99	261,892
	127	261,893
D16—	6	261,894
	20	261,895
	124	261,896
D18—	15	261,897
	25	261,898
		261,899
		261,900
D19—	54	261,901
	78	261,902
	88	261,903
	92	261,904
D20—	27	261,905
D21—	12	261,906
	13	261,907
	61	261,908
	66	261,909
	101	261,910
	104	261,911
	137	261,912
	149	261,915
	150	261,913
	161	261,914
	231	261,916
	244	261,917
D22—	24	261,918
		261,919
		261,920
	27	261,921
D23—	55	261,927
	55 X	261,926
	59	261,928
	61	261,929
	95	261,922
		261,930
	97	261,931
	123	261,923
	127	261,924
	151	261,925
D24—	10	261,932
	23	261,933
	31	261,934
	33	261,935
	99	261,936
D25—	26	261,937
D26—	110	261,938
D28—	21	261,939
	88	261,940
	93	261,941
D29—	7	261,942
D32—	18	261,851
D92—	1 P	261,943

CLASSIFICATION OF PLANTS

P.—	41	4,790
		4,791
		4,792

GEOGRAPHICAL INDEX OF RESIDENCE OF INVENTORS

(U.S. States, Territories and Armed Forces, the Commonwealth of Puerto Rico, and the Canal Zone)

Alabama	1	Kentucky	21	Oregon	41
Alaska	2	Louisiana	22	Pennsylvania	42
American Samoa	3	Maine	23	Puerto Rico	43
Arizona	4	Maryland	24	Rhode Island	44
Arkansas	5	Massachusetts	25	South Carolina	45
California	6	Michigan	26	South Dakota	46
Canal Zone	7	Minnesota	27	Tennessee	47
Colorado	8	Mississippi	28	Texas	48
Connecticut	9	Missouri	29	Utah	49
Delaware	10	Montana	30	Vermont	50
District of Columbia	11	Nebraska	31	Virginia	51
Florida	12	Nevada	32	Virgin Islands	52
Georgia	13	New Hampshire	33	Washington	53
Guam	14	New Jersey	34	West Virginia	54
Hawaii	15	New Mexico	35	Wisconsin	55
Idaho	16	New York	36	Wyoming	56
Illinois	17	North Carolina	37	U.S. Air Force	57
Indiana	18	North Dakota	38	U.S. Army	58
Iowa	19	Ohio	39	U.S. Navy	59
Kansas	20	Oklahoma	40		

(First number in listing denotes location according to above key. Refer to patent number in body of the Official Gazette to obtain details as to inventor name, location, etc.)

PATENTS

6 : 01 :	4,300,328
	4,300,276
	4,300,461
	4,300,596
	4,300,723
	4,301,003
04 :	4,300,246
	4,300,525
	4,300,747
	4,300,846
	4,300,971
	4,301,133
	4,301,357
05 :	4,300,424
	4,301,406
06 :	Re.30,799
	4,300,244
	4,300,252
	4,300,269
	4,300,275
	4,300,284
	4,300,311
	4,300,323
	4,300,327
	4,300,353
	4,300,367
	4,300,371
	4,300,374
	4,300,398
	4,300,402
	4,300,415
	4,300,432
	4,300,434
	4,300,442
	4,300,468
	4,300,487
	4,300,495
	4,300,497
	4,300,521
	4,300,533
	4,300,537
	4,300,552
	4,300,558
	4,300,572
	4,300,574
	4,300,587
	4,300,589
	4,300,592
	4,300,602
	4,300,603
	4,300,606
	4,300,609
	4,300,623
	4,300,624
	4,300,656
	4,300,675
	4,300,690
	4,300,716
	4,300,737
	4,300,740
	4,300,743
	4,300,759
	4,300,762
	4,300,769
	4,300,770
	4,300,773
	4,300,781
	4,300,784
	4,300,788
	4,300,795
	4,300,858
	4,300,869
	4,300,883
	4,300,885
	4,300,891
	4,300,909
	4,300,914
	4,300,930
	4,300,940
	4,300,945
	4,300,966
	4,300,978
	4,300,996
	4,301,002
	4,301,010
	4,301,012
	4,301,095
	4,301,117
	4,301,118
	4,301,137
	4,301,154
	4,301,155
	4,301,156
	4,301,171
	4,301,180
	4,301,181
	4,301,182
	4,301,194
	4,301,252
	4,301,254
	4,301,277
	4,301,321
	4,301,332
	4,301,337
	4,301,351
	4,301,354
	4,301,355
	4,301,366
	4,301,390
	4,301,391
	4,301,409
	4,301,415
	4,301,416
	4,301,441
	4,301,452
	4,301,454
	4,301,456
	4,301,466
	4,301,468
	4,301,471
	4,301,473
	4,301,476
	4,301,492
	4,301,501
	4,301,505
	4,301,517
	4,301,521
	4,301,523
	4,301,524
	4,301,529
	4,301,537
	4,301,543
08 :	4,300,268
	4,300,575
	4,300,613
	4,300,800
	4,300,888
	4,301,016
	4,301,326
	4,301,379
	4,301,513
09 :	4,300,290
	4,300,439
	4,300,457
	4,300,458
	4,300,459
	4,300,660
	4,300,661
	4,300,662
	4,300,663
	4,300,684
	4,300,710
	4,300,761
	4,300,816
	4,300,842
	4,300,959
	4,301,105
	4,301,106
	4,301,108
	4,301,112
	4,301,121
	4,301,127
	4,301,199
	4,301,222
	4,301,342
	4,301,346
	4,301,384
	4,301,385
	4,301,389
	4,301,412
	4,301,414
	4,301,433
	4,301,434
	4,301,435
	4,301,436
	4,301,439
	4,301,469
	4,301,499
10 :	4,300,422
	4,301,102
	4,301,361
11 :	4,301,472
12 :	4,300,264
	4,300,303
	4,300,449
	4,300,482
	4,300,551
	4,300,601
	4,300,610
	4,300,701
	4,300,706
	4,300,708
	4,300,758
	4,300,763
	4,300,889
	4,301,104
	4,301,107
	4,301,109
	4,301,545
	4,301,399
	4,301,475
	4,301,516
13 :	4,300,332
	4,300,350
	4,300,369
	4,300,608
	4,300,693
	4,300,794
	4,300,863
	4,301,147
	4,301,449
	4,301,525
16 :	4,300,428
	4,300,721
	4,301,396
17 :	4,300,253
	4,300,273
	4,300,287
	4,300,295
	4,300,312
	4,300,313
	4,300,318
	4,300,333
	4,300,335
	4,300,336
	4,300,339
	4,300,359
	4,300,379
	4,300,430
	4,300,433
	4,300,435
	4,300,493
	4,300,518
	4,300,523
	4,300,553
	4,300,559
	4,300,562
	4,300,584
	4,300,669
	4,300,679
	4,300,681
	4,300,683
	4,300,685
	4,300,687
	4,300,694
	4,300,698
	4,300,714
	4,300,722
	4,300,745
	4,300,754
	4,300,775
	4,300,779
	4,300,790
	4,300,810
	4,300,819
	4,300,832
	4,300,845
	4,300,847
	4,300,861
	4,300,887
	4,300,908
	4,300,912
	4,300,923
	4,300,997
	4,301,041
	4,301,045
	4,301,103
	4,301,113
	4,301,140
	4,301,146
	4,301,185
	4,301,198
	4,301,206
	4,301,312
	4,301,378
	4,301,432
	4,301,444
	4,301,494
	4,301,503
	4,301,531
18 :	4,300,294
	4,300,319
	4,300,326
	4,300,383
	4,300,436
	4,300,541
	4,300,667
	4,300,752
	4,300,890
	4,300,927
	4,301,115
	4,301,276
	4,301,282
	4,301,313
	4,301,343
19 :	4,300,798
	4,301,017
20 :	4,300,320
	4,300,532
21 :	4,300,261
	4,300,793
	4,300,859
	4,300,921
	4,301,493
22 :	4,300,373
	4,300,904
23 :	4,300,247
	4,300,481
	4,300,872
24 :	4,300,262
	4,300,389
	4,300,400
	4,300,438
	4,300,496
	4,300,607
	4,300,688
	4,300,833

4,300,855
4,301,037
4,301,131
4,301,232
4,301,245
4,301,327
4,301,418
4,301,419
25 : 4,300,281
4,300,306
4,300,317
4,300,401
4,300,414
4,300,431
4,300,472
4,300,555
4,300,557
4,300,605
4,300,650
4,300,654
4,300,717
4,300,736
4,300,764
4,300,768
4,300,771
4,300,813
4,300,820
4,300,822
4,300,827
4,300,848
4,300,657
4,300,865
4,300,974
4,300,975
4,300,998
4,301,013
4,301,025
4,301,040
4,301,053
4,301,098
4,301,100
4,301,114
4,301,120
4,301,124
4,301,129
4,301,153
4,301,201
4,301,204
4,301,278
4,301,367
4,301,372
4,301,429
4,301,506
4,301,515
4,301,528
26 : Re.30,796
4,300,241
4,300,260
4,300,315
4,300,409
4,300,410
4,300,456
4,300,492
4,300,507
4,300,509
4,300,511
4,300,583
4,300,591
4,300,595
4,300,612
4,300,628
4,300,652
4,300,697
4,300,718
4,300,731
4,300,777
4,300,785
4,300,894
4,300,954
4,301,004
4,301,078
4,301,079
4,301,175
4,301,294
4,301,328
4,301,330
4,301,443
4,301,512
27 : 4,300,375
4,300,313
4,300,566
4,300,739
4,300,742
4,300,791
4,300,828
4,301,179
4,301,195
4,301,288
4,301,405
29 : 4,300,416
4,300,640
4,300,760
4,300,867
4,300,942
4,300,943
4,301,183
4,301,333
4,301,438
30 : 4,300,581
31 : 4,300,304
4,300,310
4,300,334
4,300,545
4,300,597
4,300,659
32 : 4,301,032
33 : 4,300,477
4,300,778
4,300,830
4,300,834
4,300,841
4,301,445
34 : 4,300,249
4,300,267
4,300,272
4,300,314
4,300,404
4,300,413
4,300,437
4,300,527
4,300,549
4,300,582
4,300,615
4,300,678
4,300,689
4,300,744
4,300,765
4,300,792
4,300,811
4,300,866
4,300,895
4,300,897
4,300,964
4,300,973
4,300,979
4,300,989
4,300,994
4,300,995
4,301,018
4,301,019
4,301,020
4,301,022
4,301,024
4,301,046
4,301,055
4,301,057
4,301,063
4,301,074
4,301,076
4,301,086
4,301,096
4,301,122
4,301,152
4,301,158
4,301,170
4,301,176
4,301,184
4,301,188
4,301,190
4,301,192
4,301,209
4,301,246
4,301,255
4,301,267
4,301,270
4,301,292
4,301,300
4,301,302
4,301,309
4,301,316
4,301,317
4,301,320
4,301,322
4,301,430
4,301,458
4,301,463
4,301,491
4,301,495
4,301,496
4,301,510
4,301,530
4,301,533
4,301,536
35 : 4,300,962
4,301,425
36 : Re.30,798
4,300,248
4,300,288
4,300,299
4,300,316
4,300,337
4,300,356
4,300,386
4,300,392
4,300,450
4,300,455
4,300,475
4,300,486
4,300,524
4,300,540
4,300,542
4,300,550
4,300,565
4,300,568
4,300,576
4,300,578
4,300,611
4,300,691
4,300,700
4,300,741
4,300,783
4,300,806
4,300,829
4,300,884
4,300,906
4,300,907
4,300,947
4,300,950
4,300,953
4,300,980
4,300,982
4,300,988
4,301,014
4,301,059
4,301,134
4,301,145
4,301,150
4,301,178
4,301,193
4,301,196
4,301,202
4,301,208
4,301,214
4,301,226
4,301,233
4,301,248
4,301,324
4,301,347
4,301,362
4,301,377
4,301,386
4,301,442
4,301,457
4,301,507
4,301,520
4,301,542
37 : 4,300,282
4,300,309
4,300,342
4,300,370
4,300,447
4,300,709
4,300,955
4,301,239
4,301,397
39 : Re.30,794
Re.30,797
4,300,256
4,300,286
4,300,363
4,300,418
4,300,425
4,300,473
4,300,478
4,300,522
4,300,528
4,300,530
4,300,538
4,300,571
4,300,617
4,300,670
4,300,674
4,300,677
4,300,680
4,300,719
4,300,734
4,300,746
4,300,766
4,300,767
4,300,774
4,300,780
4,300,782
4,300,787
4,300,797
4,300,849
4,300,864
4,300,876
4,300,878
4,300,929
4,300,931
4,300,932
4,300,933
4,300,937
4,300,972
4,300,981
4,301,023
4,301,030
4,301,031
4,301,038
4,301,044
4,301,051
4,301,052
4,301,054
4,301,077
4,301,087
4,301,089
4,301,090
4,301,119
4,301,135
4,301,203
4,301,220
4,301,258
4,301,259
4,301,260
4,301,296
4,301,306
4,301,319
4,301,509
40 : 4,300,352
4,300,394
4,300,634
4,300,635
4,300,920
4,301,034
4,301,097
4,301,247
4,301,274
4,301,315
4,301,401
41 : 4,300,429
4,300,462
4,300,645
4,300,836
4,300,844
4,300,924
4,301,000
4,301,360
4,301,388
4,301,451
4,301,474
42 : Re.30,795
4,300,289
4,300,291
4,300,297
4,300,301
4,300,322
4,300,355
4,300,388
4,300,396
4,300,412
4,300,440
4,300,443
4,300,479
4,300,534
4,300,567
4,300,604
4,300,627
4,300,631
4,300,665
4,300,715
4,300,725
4,300,726
4,300,728
4,300,738
4,300,748
4,300,749
4,300,753
4,300,860
4,300,870
4,300,934
4,300,935
4,300,938
4,300,956
4,301,011
4,301,039
4,301,072
4,301,151
4,301,197
4,301,221
4,301,237
4,301,249
4,301,250
4,301,256
4,301,281
4,301,285
4,301,286
4,301,318
4,301,331
4,301,375
4,301,394
4,301,398
4,301,450
4,301,462
4,301,490
44 : 4,300,307
4,300,536
4,300,599
45 : 4,300,330
4,300,502
4,300,526
4,300,529
4,300,535
4,300,898
4,301,111
47 : 4,300,368
4,300,382
4,300,580
4,300,796
4,301,068
4,301,069
4,301,070
4,301,071
48 : 4,300,254
4,300,393
4,300,444
4,300,451
4,300,494
4,300,585
4,300,636
4,300,637
4,300,653
4,300,657
4,300,724
4,300,750
4,300,751
4,300,756
4,300,818
4,300,877
4,301,009
4,301,036
4,301,110
4,301,138
4,301,172
4,301,261
4,301,298
4,301,314
4,301,380
4,301,383
4,301,400
4,301,486
4,301,497
4,301,518
4,301,535
49 : 4,300,240
4,300,397
4,300,853
4,300,946
4,301,447
4,301,482
50 : 4,300,786
4,301,519
51 : 4,300,250
4,300,543
4,300,803
4,300,809
4,300,918
4,300,961
4,301,426
4,301,455
4,301,534
53 : 4,300,325
4,300,426
4,300,469
4,300,512
4,300,664
4,300,671
4,300,854
4,300,856
54 : 4,300,483
4,300,484
4,300,485
4,301,216
4,301,253
55 : 4,300,258
4,300,357
4,300,441
4,300,445
4,300,446
4,300,548
4,300,561
4,300,570
4,300,682
4,300,882
4,300,967
4,301,289
4,301,291
4,301,489
4,301,508

DESIGN PATENTS

05 : 261,846
06 : 261,826
261,831
261,832
261,850
261,852
261,854
261,860
261,872
261,885
261,891
261,905
261,916
261,923
261,924
261,926
261,927
261,934
261,935
261,939
261,941
08 : 261,839
261,840
261,841
261,901
261,937
09 : 261,881
261,940
12 : 261,830
261,834
261,874
261,910
14 : 261,849
16 : 261,902
17 : 261,851
261,867
261,868
261,889
261,903
261,904
261,909
18 : 261,842
261,917
19 : 261,921
25 : 261,855
261,864
261,896
26 : 261,827
261,843
261,859
261,869
261,875
261,880
27 : 261,829
261,888
261,890
261,938
261,942
29 : 261,823
261,895
31 : 261,870
34 : 261,825
261,844
261,856
261,871
36 : 261,833
261,836
261,837
261,838
261,853
261,863
261,883
261,893
261,908
261,912
261,914
37 : 261,858
261,861
38 : 261,930
39 : 261,933
41 : 261,865
48 : 261,821
261,824
261,913
49 : 261,848
50 : 261,944
53 : 261,873
261,931
261,932

PLANT PATENTS

06 : 4,790
4,791
4,792

U.S. GOVERNMENT PRINTING OFFICE : O—1981

CHANGE OF ADDRESS FORM

NAME—FIRST, LAST

COMPANY NAME OR ADDITIONAL ADDRESS LINE

STREET ADDRESS

CITY | STATE | ZIP CODE

PLEASE PRINT OR TYPE

(or) COUNTRY

Mail this form to: NEW ADDRESS

Superintendent of Documents
Government Printing Office SSOM
Washington, D.C. 20402

Attach last subscription label here.

SUBSCRIPTION ORDER FORM

SUBSCRIPTION ORDER FORM

ENTER MY SUBSCRIPTION TO:

@ $ Domestic; @ $ Foreign.

NAME—FIRST, LAST

COMPANY NAME OR ADDITIONAL ADDRESS LINE

STREET ADDRESS

CITY | STATE | ZIP CODE

PLEASE PRINT OR TYPE

(or) COUNTRY

☐ Remittance Enclosed (Make checks payable to Superintendent of Documents)

☐ Charge to my Deposit Account No.

MAIL ORDER FORM TO:
Superintendent of Documents
Government Printing Office
Washington, D.C. 20402

Vol. 1012 Number 4

OFFICIAL GAZETTE

of the

UNITED STATES PATENT AND TRADEMARK OFFICE

November 24, 198

U.S.
DEPARTMENT
OF COMMERCE

Patent
and
Trademark
Office

OFFICIAL GAZETTE of the UNITED STATES PATENT and TRADEMARK OFFICE

November 24, 1981 Volume 1012 Number 4

CONTENTS

The following are mailed under direction of the Superintendent of Documents, Government Printing Office, Washington, D.C., 20402, to whom all subscriptions should be made payable and all communications addressed:

THE OFFICIAL GAZETTE (PATENT SECTION), issued weekly, subscription $325.00 per annum for first-class mailing, also available as fourth-class mail at $225.00 domestic; $281.25 foreign; foreign first-class mailing rates will be furnished upon request; single copies each, $5.50 domestic, $6.90 foreign.

THE OFFICIAL GAZETTE (TRADEMARK SECTION), issued weekly, subscription $105.00 per annum, foreign mailing $131.25 per annum; single copies $2.75 each domestic, $3.45 foreign.

GENERAL INFORMATION concerning PATENTS, price $2.25 each.

GENERAL INFORMATION concerning TRADEMARKS, price $1.70 each.

PRINTED COPIES OF PATENTS are furnished by the Patent and Trademark Office at 50 cents each; PLANT PATENTS in color, $1.00 each; copies of TRADEMARKS AND DESIGN PATENTS at 20 cents each. Address orders to the Commissioner of Patents and Trademarks, Washington, D.C., 20231.

Printing authorized by Section 11(a)3 of Title 35, U.S. Code P.T.O.

PATENT AND TRADEMARK OFFICE NOTICES

Patent Cooperation Treaty Information

For information concerning the PCT, consult Chapter 1800 of the Manual of Patent Examining Procedure and notices 90-95 in the consolidated listing of notices appearing in the Official Gazette of Jan. 6, 1981.

The PCT fees in effect after May 19, 1981 are as follows:

Transmittal fee	$ 35.00
Search fee	300.00
International Basic Fee (for the first 30 sheets of an international application)	215.00
Basic Supplemental Fee (for each sheet over 30)	4.00
International Designation Fee (for each State for which a national patent is sought, or group of States for which the same regional patent is sought)	50.00

RENE D. TEGTMEYER,
Assistant Commissioner for Patents.

REISSUE APPLICATIONS FILED

Notice under 37 CFR 1.11(b). The reissue applications listed below are open to inspection by the general public in the indicated Examining Groups and copies may be obtained by paying the fee therefor (37 CFR 1.21(b)).

3,272,120, Re. S.N. 275,764, Filed June 22, 1981, Cl. 101/56, ADDRESS PRINTING MACHINE WITH ROLLER PLATENS, Dean W. Johnson, deceased, by Addressograph-Multigraph Corp., Owner of Record: *Addressograph-Multigraph Corp., Cleveland, Ohio*, Attorney or Agent: George B. Newitt, et al., Ex. Gp.: 337

3,739,994, Re. S.N. 277,675, Filed June 29, 1981, Cl. 241/74, APPARATUS FOR PRODUCING DEBONED MEAT PRODUCTS, Archie Rae McFarland, Owner of Record: *Beehive Machinery, Inc., Salt Lake City, Utah*, Attorney or Agent: Phillip A. Mallinckrodt, et al., Ex. Gp.: 322

3,741,772, Re. S.N. 277,083, Filed June 25, 1981, Cl. 99/508, PROCESS FOR PRODUCING DEBONED MEAT PRODUCTS, Archie Rae McFarland, Owner of Record: *Beehive Machinery Inc., Salt Lake City, Utah*, Attorney or Agent: Philip A. Mallinckrodt, et al., Ex. Gp.: 242

4,047,567, Re. S.N. 297,581, Filed Aug. 31, 1981, Cl. 166/293, OIL WELL CEMENTING PROCESS, William J. Detroit, et al., Owner of Record: *Halliburton Co., Duncan, Okla.*, Attorney or Agent: John H. Tregoning, et al., Ex. Gp.: 354

4,052,127, Re. S.N. 297,931, Filed Aug. 31, 1981, Cl. 355/3DD, DEVELOPING SYSTEM, Shoji Kuroishi, et al., Owner of Record: *Ricoh Co., Ltd., Tokyo, Japan*, Attorney or Agent: Guy W. Shoup, et al., Ex. Gp.: 217

4,061,817, Re. S.N. 285,806, Filed July 22, 1981, Cl. 428/246, LUGGAGE SHELLS AND PROCESS FOR THE MANUFACTURE THEREOF, John M. Maxel, Owner of Record: *Armco Steel Corp., Middletown, Ohio*, Attorney or Agent: D.C. Roylance, et al., Ex. Gp.: 164

4,130,014, Re. S.N. 295,225, Filed Aug. 21, 1981, Cl. 73/861.69, TENSION MONITOR MEANS, Gerald R. Eddens, Owner of Record: *W. J. Industries, Inc., St. Louis, Mo.*, Attorney or Agent: Charles B. Haverstock, et al., Ex. Gp.: 244

4,164,410, Re. S.N. 279,279, Filed June 25, 1981, Cl. 71/98, ESTERS OF SUBSTITUTED PHENOXYBENZOIC ACIDS, COMPOSITIONS OF THE SAME AND HERBICIDAL USE THEREOF, Robert J. Theissen, Owner of Record: *Mobil Oil Corp., New York, N.Y.*, Attorney or Agent: Charles A. Huggett, et al., Ex. Gp.: 121

4,165,442, Re. S.N. 295,126, Filed Aug. 21, 1981, Cl. 174/36, TELEPHONE CABLE WITH IMPROVED SHIELD COMBINATION, Anthony P. Gabriel, Owner of Record: *General Cable Corp., Greenwich, Conn.*, Attorney or Agent: Dennis J. Mondolino, et al., Ex. Gp.: 213

4,166,763, Re. S.N. 297,675, Filed Aug. 31, 1981, Cl. 435/28, ANALYSIS OF LACTIC OR LACTATE USING LACTATE OXIDASE, Theodore W. Esders, et al., Owner of Record: *Eastman Kodak Co., Rochester, N.Y.*, Attorney or Agent: J.J. Hawley, Ex. Gp.: 172

4,176,750, Re. S.N. 293,342, Filed Aug. 17, 1981, Cl. 209/699, SORTING SYSTEM AND APPARATUS, Robert G. Holmes, Owner of Record: *Ohio Agricultural Research and Development Center, Wooster, Ohio*, Attorney or Agent: Sidney W. Millard, et al., Ex. Gp.: 311

4,199,327, Re. S.N. 281,174, Filed July 7, 1981, Cl. 048/202, PROCESS FOR GASIFICATION OF COAL TO MAXIMIZE COAL UTILIZATION AND MINIMIZE QUANTITY AND ECOLOGICAL IMPACT OF WASTE PRODUCTS, Hugh G. Hempill, et al., Owner of Record: *Kaiser Engineers, Inc., Oakland, Calif.*, Attorney or Agent: James E. Tormey, et al., Ex. Gp.: 173

4,210,781, Re. S.N. 297,831, Filed Aug. 31, 1981, Cl. 179/15.55T, SOUND SYNTHESIZING APPARATUS, Satoshi Nishimura, et al., Owner of Record: *Sanyo Electric Co., Ltd., Osaka, Japan*, Attorney or Agent: Morris Relson, et al., Ex. Gp.: 236

4,216,486, Re. S.N. 297,528, Filed Aug. 28, 1981, Cl. 357/19, LIGHT EMITTING AND LIGHT DETECTING SEMICONDUCTOR DEVICE FOR INTERFACING WITH AN OPTICAL FIBER, John J. Geddes, Owner of Record: *Honeywell, Inc., Minneapolis, Minn.*, Attorney or Agent: Laurence J. Marhoefer, et al., Ex. Gp.: 254

4,221,634, Re. S.N. 297,775, Filed Aug. 31, 1981, Cl. 162/190, METHOD OF TREATING PAPERMAKING WHITE WATER, Arthur W. Frost, III, Owner of Record: *Federal Paper Board Co., Inc., New York, N.Y.*, Attorney or Agent: James T. Fitzgibbon, et al., Ex. Gp.: 173

4,232,010, Re. S.N. 296,353, Filed Aug. 26, 1981, Cl. 424/200, CALCIUM-ANTAGONISTIC COMPOSITION, Goro Tsukamoto, et al., Owner of Record: *Kanebo, Ltd., Tokyo, Japan*, Attorney or Agent: John E. Lind, et al., Ex. Gp.: 125

4,249,303, Re. S.N. 287,463, Filed July 27, 1981, Cl. 29/868, METHOD FOR ELECTRICAL CONNECTION OF FLAT CABLES, Karl Weinmann, et al., Owner of Record: *Thomas & Betts Corp., Raritan, N.J.*, Attorney or Agent: Robert M. Rodrick, et al., Ex. Gp.: 321

4,259,138, Re. S.N. 294,819, Filed Aug. 20, 1981, Cl. 156/363, CORRECTION LABEL APPLYING DEVICE FOR A LABEL PRINTING MACHINE, Yo Sato, Owner of Record: *Kabushiki Kaisha Sato Kenkyusho, Tokyo, Japan*, Attorney or Agent: Sidney G. Faber, et al., Ex. Gp.: 161

4,262,174, Re. S.N. 286,901, Filed July 27, 1981, Cl. 369/221, TRACK SKIPPER FOR VIDEO DISC PLAYER, John Clifford Bleazey, Owner of Record: *RCA Corp., New York, N.Y.*, Attorney or Agent: Eugene M. Whitacre, et al., Ex. Gp.: 243

4,279,714, Re. S.N. 294,251, Filed Aug. 19, 1981, Cl. 204/129.9 AC ETCHING OF ALUMINUM CAPACITOR, Mulk R. Arora, et al., Owner of Record: *Sprague Electric Co., North Adams, Mass.*, Attorney or Agent: Arthur G. Connolly, et al., Ex. Gp.: 114

REQUEST FOR REEXAMINATION FILED

Notice under 37 CFR 1.11(c). The request for reexamination listed below is open to inspection by the general public in the indicated Examining Group. Copies of the request and related papers may be obtained by paying the fee therefor established in the Rules (37 CFR 1.21(b)).

In the event correspondence to the patent owner is not received, this notice will be considered to be constructive notice to the patent owner and reexamination will proceed (37 CFR 1.248(a)(5) and 1.525(b).

3,400,012, Reexam. No. 90/000,093, Requested: Oct. 19, 1981, Cl. 427/242, PROCESS OF PLATING METAL OBJECTS, Michael Golben, Owner of Record: *Minnesota Mining & Manufacturing Co., St. Paul, Minn.*, Attorney or Agent: Alexander Kinney, et al., Ex. Gp.: 162 Requester: Waldes Kohinoor, Inc., Long Island City, New York, N.Y.

DEPARTMENT OF COMMERCE

Patent and Trademark Office

37 CFR Part 1

Patent Interference Proceedings

AGENCY: Patent and Trademark Office, Commerce.

ACTION: Final rule.

SUMMARY: This document amends the regulations governing patent interference proceedings. The amendments are needed, and intended to (1) clarify and more specifically define the matters which may be raised before the Board of Patent Interferences at final hearing; (2) broaden the present requirements relating to printed testimony and briefs at final hearing; and (3) specify the manner in which discovery may be used.

DATES: Effective date: December 31, 1981.

FOR FURTHER INFORMATION CONTACT: Ian A. Calvert, Chairman, Board of Patent Interferences, by telephone at (703) 557-3625, or by mail marked to his attention and addressed to the Commissioner of Patents and Trademarks, Washington, D.C. 20231.

SUPPLEMENTARY INFORMATION: A notice of proposed rulemaking concerning the amendment of 37 CFR 1.225, 1.231, 1.253, 1.254 and 1.258, and the addition of §1.288, was published in the Federal Register on November 25, 1980 (45 FR 78172). Interested persons were requested to submit written comments on or before February 4, 1981. Three comments were received.

One commenter requested that the deadline for comments be extended to April 16, 1981, the date set for comments on another proposal relating to the rules for reexamination and inter partes protest proceedings (46 FR 3162). An extension was not considered necessary, and in any event, no comments concerning the present rules were received after the published deadline.

It was suggested that §1.258(a) should not be amended to specify that a motion under §1.231(a) must be transmitted to the primary examiner in order for the matter raised in the motion to be considered by the Board of Patent Interferences at final hearing. Proposed §1.258(a)(1)(i) was objected to because a decision by the Patent Interference Examiner denying transmission would only be reviewable by petition and not by the Board. Instead of the proposal, it was suggested that §1.258 be amended to require only that a matter have been raised in a motion complying with §1.231(a) and (b) in order to be considered by the Board at final hearing.

This suggestion has not been adopted. As stated in the notice of proposed rulemaking, the proposed changes in §1.258 were not intended to alter the existing practice. The suggestion would change the practice and would, in effect, make the propriety of dismissing a motion under §1.231 reviewable by the Board of Patent Interferences at final hearing. Such a procedure would not be desirable. It would leave unsettled what issues could be raised at final hearing, lead to greater uncertainty during the taking of testimony, and impose an additional burden on the Board.

The suggestion expressed a belief that limiting review of a Patent Interference Examiner's dismissal of a §1.231 motion to review by petition is unsatisfactory. However, in the considerable time during which this procedure has been followed, it has not been found to be unsatisfactory. Whether a motion should be transmitted to the Primary Examiner is a matter that rests largely within the discretion of the Patent Interference Examiner, and any party may by petition challenge a decision of the Patent Interference Examiner to transmit or not to transmit a motion. A decision refusing to transmit a motion is scrutinized more thoroughly on petition than a decision transmitting a motion, "as it is considered desirable to submit all matters raised by motion under 37 CFR 1.231 to the primary examiner for decision on the merits where possible." *Gutman* v. *Beriger*, 200 USPQ 596, 597 (Comr. Pats. & TM, 1978). The rights of the parties are deemed to be adequately protected by limiting review of the transmission or dismissal of a motion under §1.231 to a request for reconsideration and/or petition under §§1.243(d) and 1.244, respectively.

It was also suggested that "and (b)" be inserted after "paragraph (a)" in the first sentence of 37 CFR 1.231(d). This suggestion has been adopted.

One commenter noted that proposed §1.253(e) would apparently prohibit spiral-type bindings, while at the same time requiring the testimony to be bound to lie flat when open. The proposed prohibition against "ring-type bindings" was taken from Rule 5.8(a) of the U.S. Court of Customs and Patent Appeals. It is understood that the Court prohibits such bindings because of the manner in which its records are stored. However, the Patent and Trademark Office stores records in a different manner, and generally prefers spiral-type bindings as the most convenient method of binding the testimony so that it will lie flat when open. Therefore, the sentence "Plastic and metal ring-type bindings are not acceptable" is not being adopted. While it is recognized that the rule will permit bindings which would not be acceptable to the Court, it is considered that the advantages gained by having the testimony and briefs lie flat when they are being reviewed by Patent and Trademark Office personnel and others outweigh any disadvantages which may be caused by the discrepancy between this paragraph and the Court rule.

No adverse comments were received relative to the proposed addition of new §1.288.

Environmental and Other Considerations

These rule changes will not have any significant impact on the quality of the human environment or the conservation of energy resources.

These rule changes will not have a significant adverse economic impact on a substantial number of small entities (Regulatory Flexibility Act, 5 U.S.C. 601 *et seq.*).

The Patent and Trademark Office has determined that these rule changes do not constitute a "major rule" as defined in Section 1(b) of Executive Order 12291 (45 FR 13193), since they would benefit parties in interference proceedings and impose no additional burdens on the Office.

Amendment of Regulations

PART 1—RULES OF PRACTICE IN PATENT CASES

In consideration of the comments received, and pursuant to the authority of the Commissioner of Patents and

Trademarks under 35 U.S.C. 6, 37 CFR Part 1 is amended as follows:

1. In §1.225, paragraph (a) is revised to read as follows:

§1.225 Failure of junior party to file statements or to overcome filing date of senior party.

(a) If a junior party to an interference fails to file a preliminary statement, or if his statement fails to overcome the effective filing date of another party, judgment on the record will be entered against that junior party unless:

(1) Under the provisions of §1.258(a), he would be entitled to raise before the Board of Patent Interferences a matter which is ancillary to priority and which, if decided in his favor, would remove the basis for judgment on the record against him, and

(2) Within a time set by the patent interference examiner, not less than 30 days, he requests that final hearing be set to review such matter. If the matter was raised in a motion which was dismissed for one of the reasons specified in §1.258(a)(1)(iii), the request for final hearing must be accompanied by a motion to take testimony under paragraph (b) of this section.

* * * * *

2. In §1.231, paragraph (d) is revised to read as follows:

§1.231 Motions before the primary examiner.

* * * * *

(d) All proper motions as specified in paragraphs (a) and (b) of this section, or of a similar character, will be transmitted to and considered by the primary examiner without oral argument, except that consideration of a motion to dissolve on a ground other than no interference in fact will be deferred to final hearing before a Board of Patent Interferences where the motion raises a matter which would be reviewable at final hearing under §1.258(a) and such matter is raised against a patentee or has been ruled upon by the Board of Appeals or by a court in ex parte proceedings. Also consideration of a motion to add or remove the names of one or more inventors may be deferred to final hearing if such motion is filed after the times for taking testimony have been set. Requests for reconsideration will not be entertained.

* * * * *

3. In §1.253, paragraph (e) is revised to read as follows:

§1.253 Copies of the testimony.

* * * * *

(e) When the copies of the testimony are submitted in printed form, they may be produced by standard typographic printing or by any process capable of producing a clear black permanent image. All printed matter except on covers must appear in at least 11 point type on opaque, unglazed paper. Margins must be justified. Footnotes may not be printed in type smaller than 9 point. The page size shall be either 7-5/8 by 10-1/4 inches (19.4 by 26 cm.) with type matter 4-1/6 by 7-1/6 inches (10.6 by 18.2 cm.), or 8-1/2 by 11 inches (21.6 by 27.9 cm.) with type matter 6-1/2 by 9-1/2 inches (16.5 by 24.1 cm.). The testimony shall be bound to lie flat when open. Twenty-five additional copies for the United States Court of Customs and Patent Appeals, should appeal be taken, may also be filed; if no appeal be taken, the twenty-five copies will be returned to the party filing the testimony.

* * * * *

4. Section 1.254 is amended by adding the following sentence:

§1.254 Briefs at final hearing.

* * * * *

The board may refuse to accept any brief which has been printed, typewritten, or bound otherwise than in substantial conformity with this section.

5. Section 1.258 is revised to read as follows:

§1.258 Matters considered in determining priority.

(a) In determining priority of invention, the Board of Patent Interferences will consider only priority of invention on the evidence submitted, and matters ancillary thereto. A party shall be entitled to raise a matter which is ancillary to priority only if:

(1) The matter was raised by the party in a motion under §1.231(a), and:

(i) The motion was transmitted to and decided by the primary examiner; or

(ii) consideration of the motion was deferred to final hearing; or

(iii) The motion was dismissed as being based on facts sought to be established by affidavits, declarations or evidence outside of official records and printed publications, or as being based on a ground which would require the taking of testimony; or

(2) The matter was raised by the party in opposition to a motion under §1.231(a) (2), (3), (4) or (5) which was granted over his opposition; or

(3) The party shows good reason why the matter was not raised as specified in paragraphs (a)(1) or (a)(2) of this section.

(b) To prevent manifest injustice the Board of Patent Interferences may in its discretion consider a matter which is ancillary to priority even though it would not otherwise be entitled to consideration under paragraph (a) of this section.

(c) At final hearing between an application and a patent the prior art of record in the patent file may be referred to for the purpose of construing the issue.

6. Section 1.288 is added to read as follows:

§1.288 Use of discovery.

(a) If a party intends to rely upon an admission or upon an answer to an interrogatory, obtained by discovery, the admission or answer may be introduced into evidence by filing, before the closing of the time for taking the testimony of the party (before the time for taking the testimony in chief if such admission or answer is not in rebuttal), a copy of the admission and the request therefor and/or a copy of the interrogatory and its answer, together with a notice of reliance thereon.

(b) A party may not rely upon any other matter obtained by discovery unless it is introduced into evidence pursuant to §§1.271 to 1.286.

Dated: October 5, 1981.
Gerald J. Mossinghoff,
Commissioner of Patents and Trademarks.

Dated: October 10, 1981.
Approved:
Robert B. Ellert,
Acting Assistant Secretary for Productivity, Technology and Innovation.

[FR Doc. 81-31096 Filed 10-26-81; 8:45 am]
BILLING CODE 35 10-16-M

Status of PTO Services

The following is an update of the status of PTO services:

Service Item	Performance Goal (Calendar Days)	Actual	Comment
Mail Processing & Delivery	4	3.5	
Filing Receipts:			
Patents	22	97	Due to staffing limitations.
Trademarks	42	36	Due to staffing limitations.
Patent Copies:			
Window Coupons	5	95% within 5 days 99% within 10 days	This new method for showing actual service levels is based on a 3% random sample of all completed orders
Mail Coupons	15	95% within 10 days 99% within 20 days	
Letter Orders	20	95% within 20 days 99% within 30 days	
Certified Copies	Being established	95% within 15 days 99% within 20 days	Based on a 3% random sample of all completed orders.
Trademark Search Room:			
Filing Drawings	21	24	
Filing Reg. Certificates	3	11	
Patent Assignments	15	63	Due to staffing limitations.
Trademark Assignments	21	73	Due to staffing limitations.
Patent Official Gazette	Issue Date	On schedule	
Patent Grants	Issue Date	1.5 days late	Expected to be on schedule by the end of November
Trademark Official Gazette	Issue Date	On schedule	
Trademark Registrations	Issue Date	On schedule	

Nov. 3, 1981.

THERESA A. BRELSFORD
for Richard J. Shakman,
Assistant Commissioner for Administration

PATENT NOTICES

Certificates of Correction for the Week of Nov. 24, 1981

D. 252,106	4,246,172	4,276,415	4,284,528
3,383,207	4,246,726	4,276,591	4,284,677
3,817,660	4,247,787	4,276,621	4,284,802
3,979,444	4,248,006	4,276,978	4,284,803
3,984,158	4,248,359	4,277,090	4,284,938
4,041,951	4,248,382	4,277,313	4,284,970
4,042,585	4,248,848	4,277,320	4,285,128
4,055,873	4,250,519	4,277,344	4,285,390
4,064,155	4,251,438	4,277,438	4,285,733
4,082,879	4,251,819	4,277,496	4,285,988
4,085,139	4,251,837	4,278,099	4,286,351
4,098,805	4,252,307	4,278,140	4,286,353
4,109,082	4,255,083	4,278,397	4,286,805
4,123,849	4,255,390	4,278,460	4,286,818
4,125,552	4,255,485	4,278,464	4,286,845
4,130,569	4,255,507	4,278,503	4,286,904
4,167,516	4,256,554	4,279,306	4,287,131
4,176,002	4,258,308	4,279,523	4,287,174
4,187,208	4,259,700	4,279,919	4,287,289
4,187,700	4,259,869	4,280,174	4,287,358
4,191,594	4,260,227	4,280,206	4,287,378
4,195,167	4,261,858	4,280,587	4,287,484
4,201,190	4,263,210	4,281,002	4,288,117
4,203,152	4,263,404	4,281,043	4,288,332
4,203,952	4,263,414	4,281,082	4,288,646
4,207,733	4,263,419	4,281,184	4,288,848
4,208,246	4,264,748	4,281,492	4,289,397
4,211,800	4,267,350	4,281,722	4,289,437
4,216,831	4,268,528	4,281,812	4,289,536
4,226,014	4,268,800	4,281,954	4,289,669
4,227,906	4,269,602	4,282,224	4,289,674
4,228,113	4,269,758	4,282,233	4,289,708
4,228,592	4,270,133	4,282,246	4,289,914
4,231,910	4,270,284	4,282,386	4,290,092
4,234,159	4,272,544	4,282,870	4,290,266
4,239,556	4,272,953	4,283,180	4,290,896
4,239,589	4,273,851	4,283,188	4,290,897
4,239,630	4,274,063	4,283,437	4,291,011
4,239,642	4,274,505	4,283,569	4,291,020
4,239,824	4,275,493	4,283,836	4,291,255
4,240,663	4,275,874	4,284,014	
4,242,538	4,276,137	4,284,123	
4,245,124	4,276,355	4,284,140	

Disclaimers

Re. 27,976.—*Lloyd W. Sahley,* Shaker Heights, Ohio. DOCUMENT FEEDER. Patent dated Apr. 23, 1974. Disclaimer filed Sept. 11, 1981, by the assignee, *Eastman Kodak Co.*

Hereby enters this disclaimer to claims 9, 72 and 73 of said patent.

3,796,967.—*Jack C. Sondermeyer,* S. Somerville, N.J. AMPLIFIER PROTECTION CIRCUIT. Patent dated Mar. 12, 1974. Disclaimer filed June 2, 1981, by the assignee, *RCA Corp.*

Hereby enters this disclaimer to claims 1, 2, 3, 4 and 5 of said patent.

3,810,174.—*James L. Heard,* and *William C. Hoffman,* Torrance, and *Eugene W. Opittek,* Tustin, Calif. DIGITAL SCAN CONVERTER. Patent dated May 7, 1974. Disclaimer filed Mar. 9, 1981, by the assignee, *Hughes Aircraft Co.*

Hereby enters this disclaimer to claims 1 through 28 of said patent.

4,076,809.—*W. David Weir,* Levittown and *Edward E. Kilbourn,* Chalfont, Pa. PHOSPHONOUREIDE AND PHOSPHONOTHIOUREIDE ANTHELMINTICS. Patent dated Feb. 28, 1978. Disclaimer filed Mar. 31, 1981, by the assignee, *Beecham, Inc.*

Hereby enters this disclaimer to all of the claims of said patent.

4,234,575.—*W. David Weir,* Levittown and *Edward E. Kilbourn,* Chalfont, Pa. PHOSPHONOUREIDE AND PHOSPHONOTHIOUREIDE ANTHELMINTICS. Patent dated Nov. 18, 1980. Disclaimer filed Mar. 31, 1981, by the assignee, *Beecham, Inc.*

Hereby enters this disclaimer to all of the claims of said patent.

4,237,399.—*Hitoshi Sakamoto,* Kanagawa-Ken, Japan. DRIVING CIRCUIT FOR PIEZO-ELECTRIC MULTIMORPH TRANSDUCER. Patent dated Dec. 2, 1980. Disclaimer filed, Aug. 27, 1981, by the assignee, *Sony Corp.*

Hereby enters this disclaimer to claims 3, 4, 11 and 12 of said patent.

Patent Suits

Notices under 35 U.S.C. 290; Patent Act of 1952

2,124,986, Walter L. Pipes, RUBBER SOLES AND HEELS; **2,206,860,** Paul A. Sperry, SHOE; **2,284,307,** Paul A. Sperry, METHOD OF SLITTING SHOE SOLES, **filed** July 29, 1981, D.C.N.H. (Concord), Doc. 81-373, *The Timberland Co.* v. *The Stride Rite Corp., et al.*

2,206,860. (See 2,124,986.)

2,284,307. (See 2,124,986.)

3,081,230, SK & F, Co., DIURETIC AND ANTIHYPERTENSIVE TRIAMINOARYLPTERIDINES, **filed** Dec. 19, 1979, D.C.N.J. (Newark), Doc. 79-3611, *SK & F, Co.* v. *Pharmadyne Laboratories, Inc.* Consent judgment for permanent injunction filed Feb. 3, 1981.

3,109,468, Lamb-Weston, Inc., VEGETABLE SLICING APPARATUS; **3,116,772,** same, METHOD FOR SLICING VEGETABLES, **filed** Feb. 4, 1981, D.C. Del. (Wilmington), Doc. 81-49, *Amfac Foods, Inc.* v. *AKF Foods, Inc.* **Same, filed** Feb. 23, 1981, D.C., E.D. Wash. (Spokane), Doc. C-81-094-RJM, *Amfac Foods, Inc.* v. *Chef Reddy Foods Corp.*

3,116,772. (See 3,109,468.)

3,122,474, Hoffmann-La Roche, CHLORDIAZEPOXIDE AND CLIDINIUM HALIDE COMPOSITION AND METHOD OF USING SAME, **filed** Sept. 10, 1980, D.C.N.J. (Newark), Doc. 80-2953, *Hoffman-La Roche* v. *Zenith Laboratories.* Consent judgment for permanent injunction filed Apr. 15, 1981.

3,140,988, Clauss and Brown, ELECTRODEPOSITION OF NICKEL, **filed** Jan. 28, 1981, D.C. Mich. (Detroit), Doc. 81-70302, *Hooker Chemicals & Plastics* v. *Quin-Tec, Inc.*

3,160,987, Wallfill Insulation, Inc., BUILDING CONSTRUCTION AND INSULATION DAM THEREFOR, **filed** Aug. 29, 1980, D.C., C.D. Ill. (Peoria), Doc. 80-1163, *Wallfill Insulation, Inc.* v. *Air Vent, Inc.* Complaint dismissed with prejudice and counterclaims dismissed with prejudice on Dec. 29, 1980.

3,175,560, Mary Rose Menzies, REDUCING GARMENT, **filed** June 15, 1981, D.C., C.D. Calif. (Los Angeles), Doc. 81-2920, *Mary Rose Menzies* v. *E.I. Du Pont de Nemours & Co.*

3,236,709, Bandag Inc., TIRE RECAPPING PROCESS, **filed** Aug. 6, 1980, D.C., W.D.N.C. (Statesville), Doc. ST-C-80-33, *Bandag Inc.* v. *Gerrard Tire Co., Inc.* Permanent injunction against Defendant from further infringement of Claims 1-7 of Plaintiff's patent filed Aug. 3, 1981.

3,237,319, University Patents, Inc., SKI BOOTS HAVING A THIXOTROPIC MATERIAL ENCIRCLING THE ANKLE PORTION THEREOF; **3,402,411,** same, PROCESS FOR MAKING BOOTS, SPORTS EQUIPMENT AND HATS, **filed** May 22, 1980, D.C. Colo. (Denver), Doc. 80-K-675, *University Patents, Inc.* v. *Sport-Obermeyer, Ltd.* **Same, filed** May 27, 1980, D.C.N.H. (Concord), Doc. 80-236, *University Patents, Inc.* v. *Dartmouth Outdoor Sports, Inc.* **Same, filed** May 28, 1980, D.C. Mass. (Springfield), Doc. 80-0138-F, *University Patents, Inc.* v. *Questor Corp.* Case transferred to District of Colorado on Feb. 23, 1981.

3,241,716, Eugene A. Wahl, GRAVIMETRIC BELT FEEDER, **filed** Aug. 26, 1980, D.C.N.J. (Newark), Doc. 80-2830, *Eugene A. Wahl, et al.* v. *Metalfab, Inc., et al.* Order dismissing action filed May 29, 1981.

3,282,600, Radio Steel & Mfg. Co., WHEELBARROW, **filed** July 27, 1981, D.C., N.D. Ohio (Cleveland), Doc. C81-1506, *Radio Steel & Mfg. Co.* v. *MTD Products, Inc.*

3,317,994, Southwire Co., METHOD OF CONDITIONING METAL FOR HOT FORMING; **4,129,170,** same, APPARATUS FOR PRODUCING A HOT-FORMED PRODUCT, **filed** June 12, 1981, D.C., N.D. Ill. (Chicago), Doc. 81-C-3313, *Southwire Co.* v. *Essex Group, Inc.*

3,387,786, Robert W. Rynberk, DIVIDER AND SPRINKLER COMBINATION, **filed** Mar. 27, 1980, D.C., N.D. Ill. (Chicago), Doc. 81-C-1738, *Wayne Management Corp.* v. *DeCanio Builders Supply Co.* **Same, filed** Mar. 27, 1981, D.C., N.D. Ill. (Chicago), Doc. 81-C-1739, *Wayne Management Corp.* v. *Alsip Nursery.* **Same, filed** Apr. 30, 1981, D.C., N.D. Ill. (Chicago), Doc. 81-C-2444, *Wayne Management Corp.* v. *Trim-Tex.*

3,391,601, Jim Sant'Andrea, Inc., IMAGE PROJECTING SYSTEM, **filed** July 21, 1981, D.C., S.D.N.Y., Doc. 81-Civ-4525, *Jim Sant'Andrea, Inc.* v. *Charles Close.*

3,402,411. (See 3,237,319.)

3,430,221, Barringer Research, Ltd., PROXIMITY DETECTOR, **filed** Apr. 18, 1980, D.C., N.D. Ill. (Chicago), Doc. 80-C-1922, *Barringer Research, Ltd.* v. *Illinois Department of Administrative Services.* **Same, filed** July 9, 1980, D.C., W.D. Pa. (Pittsburgh), Doc. 80-925, *Federal Laboratories Inc.* v. *Barringer Research Ltd., et al.* **Same, filed** Oct. 28, 1980, D.C. Colo. (Denver), Doc. 80-Z-1464, *Barringer Research, Ltd.* v. *Outokumpu Engineering, Inc.* **Same, filed** Aug. 15, 1980. D.C. Dist. of Columbia (Wash. D.C.), Doc. 80-2069, *Outokumpu Engineering, Inc.* v. *Barringer Research, Ltd.* Case transferred to D.C. Colo. (Denver), on Jan. 5, 1981.

3,447,479, Imed Corp., SYRINGE PUMP; **3,985,133,** same, IV PUMP; **4,114,144,** same, AUTOMATIC AIR-IN-LINE FLUID DETECTOR, **filed** June 5, 1981, D.C., N.D. Ill. (Chicago), Doc. 81-C-3155, *Travenol Laboratories, Inc., et al.* v. *Imed Corp.*

3,463,345, Kenneth R. Bockenstette, LIDDED TOTE BOX, **filed** July 2, 1981, D.C., S.D. Ohio (Dayton), Doc. C-3-81-359, *Nestier Corp.* v. *Menasha Corp.*

3,488,017, Staar S.A., STOP SYSTEM FOR A TAPE REEL DRIVE, **filed** June 19, 1981, D.C., C.D. Calif. (Los Angeles), Doc. 81-3065, *Staar S.A.* v. *Tatung Co. of America.*

3,507,861, Eli Lilly and Co., CERTAIN 3-METHYL-CEPHALOSPORIN COMPOUNDS, **filed** May 4, 1979, D.C.N.J. (Newark), Doc. 79-1381, *Eli Lilly and Co.* v. *Lark S.p.A.* Stipulation and Order of dismissal of action filed Feb. 14, 1980.

3,580,204, OY Wartsila AB, ARRANGEMENT IN SHIPS, **filed** May 15, 1981, U.S. Court of Claims (Wash. D.C.), Doc. 332-81C, *OY Wartsila AB* v. *The United States.*

3,604,322, Friedrick Sohne Mauer, BRIDGING OF EXPANSION JOINTS IN ROADWAYS OF BRIDGES, STREETS, RUNWAYS AND THE LIKE, **filed** July 17, 1981, D.C., W.D.N.Y. (Buffalo), Doc. 81-582C, *Watson-Bowman Associates, Inc.* v. *Acme Highway Products Corp.* **Same, filed** Aug. 4, 1981, D.C. Dist. of Columbia (Wash. D.C.), Doc. 81-1835, *Acme Highway Products Corp.* v. *Friedrick Sohne Maurer.*

3,608,210, California Automotive Research, TRAFFIC HAZARD SIMULATOR, **filed** Mar. 30, 1979, D.C., S.D. Calif. (San Diego), Doc. 79-0336, *California Automotive Research* v. *Applied Personal Dynamics, et al.* Order re dismissal of complaint and counterclaims filed Nov. 6, 1980.

3,615,024, Amicon Corp., HIGH FLOW MEMBRANE, **filed** June 18, 1980, D.C. Del. (Wilmington), Doc. 80-302, *Amicon Corp.* v. *Osmonics, Inc.*

3,689,459, Baxter Travenol Laboratories, Inc., NOVEL ETHER; **3,773,840,** same, DIFLUOROMETHYL 1-2, 2, 3, 3-TETRAFLUOROPROPYL ETHER, **filed** July 17, 1981, D.C. Del. (Wilmington), Doc. 81-320, *Airco, Inc.* v. *Baxter Travenol Laboratories, Inc.*

3,692,208, Dart Industries, Inc., CLOSURE FOR OPEN-MOUTHED CONTAINERS OR TUBULAR VESSELS; **3,756,480,** same, THREE-PART PRESS TYPE SEAL; **D. 226,576,** same, CONTAINER CLOSURE OR THE LIKE, **filed** Apr. 17, 1979, D.C., E.D. Wis. (Milwaukee), Doc. 79-260, *Dart Industries, Inc.* v. *Henriksen Imports, Inc., et al.* Consent to dismissal filed Nov. 13, 1980.

3,733,267, Frederick Taussig, PROCESS OF FILTRATION OF DRY CLEANING FLUID, **filed** July 24, 1975, D.C., S.D. Calif. (San Diego), Doc. 75-0426-S, *Frederick Taussig* v. *Arthur Henschel, doing business as All Service Cleaners.* Order dismissing complaint and counterclaims without prejudice filed Apr. 9, 1976.

3,756,480. (See 3,692,208.)

3,761,647, Kabushiki Kaisha Audio-Technica, CARTRIDGE FOR DETECTING VIBRATIONS REPRESENTING STEREOPHONIC SOUND; **4,075,418,** same, STEREOPHONIC PICKUP CARTRIDGE, **filed** Sept. 28, 1978, D.C. Del. (Wilmington), Doc. 78-400, *Atlantis Sound, Inc., et al.* v. *Kabushiki Kaisha Audio-Technica, et al.* Stipulation and Order dismissing action with prejudice filed July 30, 1981.

3,773,840. (See 3,689,459.)

3,808,895, John Herman Fitzwater, ELECTRIC FAIL-SAFE ACTUATOR; **Re. 30,135,** same, **filed** June 26, 1981, D.C., N.D. Ill. (Chicago), Doc. 81C3601, *Ewol, Inc.* v. *Brunswick Corp.*

3,884,068, International Measurement & Control Co., Inc., LOAD SENSING DEVICE; **4,048,848,** same, LOAD MONITORING SYSTEM; **4,062,055,** same, LOAD MONITORING SYSTEM WITH HIGH AND LOW LOAD CONTROL, **filed** Aug. 6, 1981, D.C. Conn. (Bridgeport), Doc. B-81-362, *International Measurement & Control Co., Inc.* v. *Clarktron Products, Inc.*

3,891,585, Charles H. McDonald, ELASTOMERIC PAVEMENT REPAIR COMPOSITION FOR PAVEMENT FAILURE AND A METHOD OF MAKING THE SAME, **filed** Aug. 3, 1981, D.C., N.D. Tex. (Dallas), Doc. CA-3-81-1332G, *Atlos Rubber, Inc.* v. *Allied Materials Corp., et al.*

3,909,767, Littelfuse, Inc., MINIATURE PLUG-IN FUSE; **4,056,884**, same, METHOD OF MAKING A MINIATURE PLUG-IN FUSE; **4,131,869**, same, PLUG-IN FUSE ASSEMBLY CONSTRUCTION, **filed** Nov. 13, 1980, D.C.N.J. (Newark), Doc. 80-3653, *Littelfuse, Inc.* v. *Narda, Inc.* Stipulation of dismissal filed Mar. 30, 1981.

3,952,524, Rand and Hancock, PIPE LAYING METHOD AND APPARATUS, **filed** Aug. 18, 1981, D.C. Md. (Baltimore), Doc. JH-81-2084, *Burgess F. Rand and Dane R. Hancock, et al.* v. *Harford Co., et al.*

3,960,492, Nuclear Diagnostics, Inc., METHOD FOR DETERMINING AN INDEX OF BINDING PROTEIN CONTENT OF BLOOD, **filed** Nov. 21, 1980, D.C., E.D. Mich. (Detroit), Doc. 80-74396, *Nuclear Diagnostics, Inc.* v. *Advance Medical and Research Center Inc.*

3,978,777, Econovent Systems, Inc., VENTILATING APPARATUS; **4,047,519**, same; **4,153,044**, same, BACKSHELF VENTILATING HOOD, **filed** Mar. 18, 1981, D.C., S.D. Ohio (Cincinnati), Doc. C-1-81-334, *Econovent Systems, Inc.* v. *Feldkamp Sheet Metal, Inc., et al.* Action dismissed with prejudice, provided that parties, upon good cause shown, within 60 days reopen the action if settlement is not consummated. Order entered Aug. 18, 1981.

3,985,133. (See 3,447,479.)

3,991,282, Interconnect Planning Corp., MULTI STATION TELEPHONE SWITCHING SYSTEM, **filed** Nov. 21, 1980, D.C., S.D.N.Y., Doc. 80-Civ-6602 KTD, *Interconnect Planning Corp.* v. *Thomas E. Feil.*

3,993,315, Hansen and Sorensen, AUTOMATIC PHONOGRAPHS; **4,124,216**, N. Krebs Sorensen, PHONOGRAPH, **filed** July 21, 1981, D.C., N.D. Ill. (Chicago), Doc. 81-C-4116, *Bang & Olufsen of America* v. *U.S. Pioneer Electronics Corp.*

3,994,027, Jensen and Fetz, PREPUPILLARY LENS FOR IMPLANTING IN A HUMAN EYE, **filed** July 8, 1981, D.C., C.D. Calif. (Los Angeles), Doc. 81-3392, *Ronald P. Jensen, M.D.* v. *California Intraocular Lens Corp.*

4,003,408, Entek Corp., UNDERGROUND IRRIGATION POROUS PIPE; **4,028,288**, same, MOLDABLE END PRODUCTS FROM PRIMARILY RECLAIMABLE WASTE MATERIALS; **4,110,420**, same, METHOD FOR EXTRUDING POROUS IRRIGATION PIPE; **4,168,799**, same, SOAKER HOSE; **4,191,522**, same, EXTRUDING MACHINE AND END PRODUCTS, **filed** Aug. 12, 1981, D.C., N.D. Tex. (Dallas), Doc. CA-3-1434G, *Entek Corp.* v. *Entek Corp. of America, et al.*

4,021,257, Tile Council of America, Inc., CEMENTIOUS COMPOSITION FOR USE IN PREPARING POINTING COMPOUNDS OR MORTAR COMPOUNDS; **4,043,827**, same, SAG RESISTANT DRY-SET MORTAR COMPOSITION, **filed** June 29, 1981, D.C.N.J. (Trenton), Doc. 81-2021, *Tile Council of America, Inc.* v. *American Hoeschst Corp.*

4,021,583, Consolidated Foods Corp., FRUIT-FLAVORED FROZEN CONFECTION AND METHOD OF MAKING THE SAME, **filed** Aug. 12, 1981, D.C., W.D. Mo. (Kansas City), Doc. 81-0690-CV-W-5, *Merritt Foods Co.* v. *Consolidated Foods Corp.*

4,028,288. (See 4,003,408.)

4,043,827. (See 4,021,257.)

4,047,519. (See 3,978,777.)

4,048,848. (See 3,884,068.)

4,056,884. (See 3,909,767.)

4,062,055. (See 3,884,068.)

4,062,968, Sumitomo Chemical Co. Ltd., INSECTICIDAL SUBSTITUTED ACETATE COMPOUNDS, **filed** Aug. 21, 1980, D.C., S.D. Tex. (Houston), Doc. H-80-1884, *Shell Oil Co. and Sumitomo Chemical Co. Ltd.* v. *America Cyanamid Co.*

4,065,264, Shiley, Inc., BLOOD OXYGENATOR WITH INTEGRAL HEAT EXCHANGER FOR REGULATING THE TEMPERATURE OF BLOOD IN AN EXTRACORPOREAL CIRCUIT; **4,138,288**, same, METHOD AND APPARATUS FOR OXYGENATING AND REGULATING THE TEMPERATURE OF BLOOD; **4,138,464**, same, BLOOD OXYGENATOR WITH INTEGRAL HEAT EXCHANGER, **filed** July 2, 1981, D.C., C.D. Calif. (Los Angeles), Doc. 81-3262, *Shiley, Inc.* v. *Bentley Laboratories, Inc.*

4,068,379, Miller and Andreiko, ORTHODONTIC APPLIANCE AWITH POROUS TOOTH-ABUTTING FACE, **filed** Aug. 24, 1979, D.C., N.D. Ill. (Chicago), Doc. 79c3497, *Frank R. Miller, et al.* v. *Unitek Corp.* **Same, filed** Dec. 5, 1979, D.C., C.D. Calif. (Los Angeles), Doc. 79-04457, *"A"-Company* v. *American Hospital Supply Corp., et al.*

4,071,338, Hutter and Hutter, AIR EXHAUSTED MIXING BOWL, **filed** Apr. 28, 1981, D.C., S.D.N.Y., Doc. 81-2553 RJW, *DePuy Div. of Bio-Dynamics Inc.* v. *Howmedica Inc.*

4,075,418. (See 3,761,647.)

4,110,420. (See 4,003,408.)

4,114,144. (See 3,447,479.)

4,116,560, James J. Dragani, APPARATUS AND METHOD FOR DOCUMENT MICROFILMING SYSTEM, **filed** Aug. 13, 1981, D.C., S.D. Ohio (Columbus), Doc. C-2-81-1007, *James J. Dragani* v. *Eastman Kodak Co.*

4,124,216. (See 3,993,315.)

4,127,485, Baker and Wall, VACUUM FILTER FOR SWIMMING POOLS, **filed** July 31, 1981, D.C., N.D. Ill. (Chicago), Doc. 81-C-4365, *Paddock Pool Equipment Co., Inc.* v. *Central Pool Supply Inc.*

4,129,170. (See 3,317,994.)

4,131,869. (See 3,909,767.)

4,138,288. (See 4,065,264.)

4,138,464. (See 4,065,264.)

4,141,361, Snyder Mfg. Co., Inc., EVACUATOR, **filed** Sept. 11, 1979, D.C., E.D. Mo. (St. Louis), Doc. 79-1110C(1), *Sherwood Medical Industries, Inc.* v. *Snyder Mfg. Co., Inc., et al.*, Action transferred to D.C., N.D. Ohio on Mar. 31, 1980.

4,142,887, Reactive Metals & Alloys Corp., STEEL LADLE DESULFURIZATION COMPOSITIONS AND METHODS OF STEEL DESULFURIZATION, **filed** Dec. 18, 1980, D.C., W.D. Pa. (Pittsburgh), Doc. 80-1812, *Reactive Metals & Alloys Corp.* v. *ESM, Inc.*

4,144,733, Billy L. Whitten, PIPE GROOVING APPARATUS, **filed** Jan. 20, 1981, D.C., N.D. Ga. (Rome), Doc. C81-22R, *Billy L. Whitten* v. *Wayne Cordle, et al.*, **Same, filed** Mar. 11, 1981, D.C., N.D. Ga. (Rome), Doc. C81-72R, *Billy L. Whitten* v, *Douglas Cordle, et al.*

4,145,780, Classic Products Corp., WATERBED ASSEMBLY; **4,152,796**, same, WATERBED MATTRESS, **filed** Sept. 7, 1979, D.C., E.D. Pa. (Philadelphia), Doc. 79-3292, *Classic Products Corp.* v. *Dynaclean, Inc., et al.* Patent Nos. 4,145,780 and 4,152,796 are invalid under 35 U.S.C. §103 as obvious in light of prior art. Judgment is hereby entered on behalf of defendants and against plaintiff on June 23, 1981.

4,146,489, Rohm and Haas Co., POLYOLEFIN GRAFT COPOLYMERS, **filed** Jan. 27, 1981, D.C. Del. (Wilmington), Doc. 81-36, *Rohm and Haas Co.* v. *Texaco, Inc.*

4,152,796. (See 4,145,780.)

4,153,044. (See 3,978,777.)

4,156,806, Raytheon Co., CONCENTRATED ENERGY MICROWAVE APPLIANCE; **4,158,760**, same, SEED HEATING MICROWAVE APPLIANCE, **filed** June 6, 1980, D.C., N.D. Ill. (Chicago), Doc. 80 C 2881, *Raytheon Co.* v. *Republic Molding Corp.* Cause ordered dismissed pursuant to order dated Feb. 3, 1981.

4,158,760. (See 4,156,806.)

4,168,799. (See 4,003,408.)

4,174,588, Quaker Oats Co., TOY BLOOD PRESSURE MONITORING DEVICE; **4,177,871**, same, TOY STETHOSCOPE; **D. 253,063**, same, TOY BLOOD PRESSURE TESTER, **filed** May 16, 1980, D.C., S.D.N.Y., Doc. 80-Civ-2961 PNL, *Fisher-Price Toys* v. *Island Merchandise Co., Ltd.* Order of discontinuance filed July 7, 1981.

4,177,871. (See 4,174,588.)

4,191,522. (See 4,003,408.)

4,209,261, NCR Corp., RIBBON CASSETTE FOR OBLIQUE RIBBON FEEDING, **filed** Sept. 19, 1980, D.C., M.D. Tenn. (Nashville), Doc. 80-3507, *NCR Corp.* v. *Graphic Ribbon, Inc.*

4,212,337, Union Carbide Corp., CLOSURE FASTENING DEVICE, **filed** June 19, 1981, D.C., E.D. Wis. (Milwaukee), Doc. 81-721, *Union Carbide Corp.* v. *Presto Products, Inc.*

4,218,585, Robert W. Carver, DIMENSIONAL SOUND PRODUCING APPARATUS AND METHOD, **filed** Aug. 27, 1980, D.C. Mass. (Boston), Doc. 80-1935-K, *Robert W. Carver* v. *Joel M. Cohen, et al.*

4,239,836, Douglas Battery Mfg. Co., SYSTEM FOR PROTECTING AND SEALING INTERCELL CONNECTING LINKS AND POLES OF INDUSTRIAL BATTERIES, **filed** May 7, 1980, D.C., M.D.N.C. (Greensboro), Doc. 80-211-WS, *Douglas Battery Manufacturing Co.* v. *William A. Picciolo.* Voluntary dismissal with prejudice filed June 23, 1980.

4,257,204, Childers Products Co., Inc., PREFABRICATED INSULATED PANEL AND WALL STRUCTURE PRODUCED THEREFROM, **filed** Apr. 24, 1981, D.C., M.D. Tenn. (Nashville), Doc. 81-3248, *Childers Products Co., Inc.* v. *Panel Systems, Inc.*

Re. 30,135. (See 3,808,895.)

D. 226,576. (See 3,692,208.)

D. 253,063. (See 4,174,588.)

D. 254,766, Christen Inc., SPATULA; **D. 254,767**, same, TONGS; **D. 254,770**, same, FORK, **filed** Nov. 17, 1980, D.C., S.D.N.Y., Doc. 80-Civ-6531 WCC, *Christen Inc.* v. *B.N.S. Industries, Inc.*

D. 254,767. (See D. 254,766.)

D. 254,770. (See D. 254,766.)

D.259,275, Austin-Berryhill Fabricators, Inc., STOVE, **filed** Aug. 14, 1981, D.C.S.C. (Greenville), Doc. 81-1768-0, *Austin-Berryhill Fabricators, Inc.* v. *United Metal Services, Inc.*

Reference Collections of U.S. Patents Available for Public Use in Patent Depository Libraries

The libraries listed herein, designated as patent depository libraries, receive current issues of U.S. Patents and maintain collections of earlier issued patents. The scope of these collections varies from library to library, ranging from patents of only recent months or years in some libraries to all or most of the patents issued since 1870, or earlier, in other libraries.

These patent collections are open to public use and each of the patent depository libraries, in addition, offers the publications of the patent classification system (e.g. The Manual of Classification, Index to the U.S. Patent Classification, Classification Definitions, etc.) and provides technical staff assistance in their use to aid the public in gaining effective access to information contained in patents. With one exception, as noted in the table following, the collections are organized in patent number sequence.

Depending upon the library, the patents may be available in microfilm, in bound volumes of paper copies, or in some combination of both. Facilities for making paper copies from either microfilm in reader-printers or from the bound volumes in paper-to-paper copies are generally provided for a fee.

Owing to variations in the scope of patent collections among the patent depository libraries and in their hours of service to the public, anyone contemplating use of the patents at a particular library is advised to contact that library, in advance, about its collection and hours, so as to avert possible inconvenience.

State	*Name of Library*	*Telephone Contact*
Alabama	Birmingham Public Library	(205) 254-2555
Arizona	Tempe: Science Library, Arizona State University	(602) 965-7607
California	Los Angeles Public Library	(213) 626-7555 Ext. 273
	Sacramento: California State Library	(916) 322-4572
	Sunnyvale: Patent Information Clearinghouse*	(408) 738-5580
Colorado	Denver Public Library	(303) 573-5152 Ext. 222
Delaware	Newark: University of Delaware	(302) 738-2238
Georgia	Atlanta: Price Gilbert Memorial Library, Georgia Institute of Technology	(404) 894-4519
Illinois	Chicago Public Library	(312) 269-2814
Louisiana	Baton Rouge: Troy H. Middleton Library, Louisiana State University	(504) 388-2570
Massachusetts	Boston Public Library	(617) 536-5400 Ext. 265
Michigan	Detroit Public Library	(313) 833-1450
Minnesota	Minneapolis Public Library & Information Center	(612) 372-6552
Missouri	Kansas City: Linda Hall Library	(816) 363-4600
	St. Louis Public Library	(314) 241-2288 Ext. 214, 215
Nebraska	Lincoln: University of Nebraska-Lincoln, Engineering Library	(402) 472-3411
New Hampshire	Durham: University of New Hampshire Library	(603) 862-1777
New Jersey	Newark Public Library	(201) 733-7814
New York	Albany: New York State Library	(518) 474-5125
	Buffalo and Erie County Public Library	(716) 856-7525 Ext. 267
	New York Public Library (The Research Libraries)	(212) 790-6291
North Carolina	Raleigh: D. H. Hill Library, N.C. State University	(919) 737-3280
Ohio	Cincinnati & Hamilton County, Public Library of	(513) 369-6936
	Cleveland Public Library	(216) 623-2870
	Columbus: Ohio State University Libraries	(614) 422-6286
	Toledo/Lucas County Public Library	(419) 255-7055 Ext. 212
Oklahoma	Stillwater: Oklahoma State University Library	(405) 624-6546
Pennsylvania	Philadelphia: Franklin Institute Library	(215) 448-1321**
	Pittsburgh: Carnegie Library of Pittsburgh	(412) 622-3138
	University Park: Pattee Library, Pennsylvania State University	(814) 865-4861
Rhode Island	Providence Public Library	(401) 521-7722 Ext. 226
Tennessee	Memphis & Shelby County Public Library and Information Center	(901) 528-2957
Texas	Dallas Public Library	(214) 748-9071
	Houston: The Fondren Library, Rice University	(713) 527-8101 Ext. 2587
Washington	Seattle: Engineering Library, University of Washington	(206) 543-0740
Wisconsin	Madison: Kurt F. Wendt Engineering Library, University of Wisconsin	(608) 262-6845
	Milwaukee Public Library	(414) 278-3043

*Collection organized by subject matter.

**Call only between the hours of 10:00 a.m. and 5:00 p.m.

PATENT EXAMINING CORPS

RENE D. TEGTMEYER, Assistant Commissioner

WILLIAM FELDMAN, Deputy Assistant Commissioner

CONDITION OF PATENT APPLICATIONS AS OF September 5, 1981

PATENT EXAMINING GROUPS	Actual Filing Date of Oldest New Case Awaiting Action
CHEMICAL EXAMINING GROUPS	
GENERAL CHEMISTRY AND PETROLEUM CHEMISTRY, GROUP 110—D. E. TALBERT, Director	5-12-80
Inorganic Compounds; Inorganic Compositions; Organo-Metal and Organo-Metalloid Chemistry; Metallurgy; Metallurgical Apparatus; Metal Stock; Electro Chemistry; Batteries; Hydrocarbons; Mineral Oil Technology; Lubricating Compositions; Gaseous Compositions; Fuel and Igniting Devices.	
GENERAL ORGANIC CHEMISTRY, GROUP 120—C. E. VAN HORN, Director	10-11-79
Heterocyclic Amides; Alkaloids; Azo; Sulfur; Misc. Esters; Carbohydrates; Herbicides; Poisons; Medicines; Cosmetics; Steroids; Oxo and Oxy; Quinones; Acids; Carboxylic Acid Esters; Acid Anhydrides; Acid Halides.	
HIGH POLYMER CHEMISTRY, PLASTICS AND MOLDING, GROUP 140—J. O. THOMAS, JR., Director	7-09-80
Synthetic Resins; Rubber; Proteins; Macromolecular Carbohydrates; Mixed Synthetic Resin Compositions; Synthetic Resins With Natural Polymers and Resins; Reclaiming; Pore-Forming; Compositions (Part) e.g., Coating; Molding; Ink; Prosthdontics; Adhesive and Abrading Compositions; Molding, Shaping, Treating Process, and Apparatus Therefor; Irradiation (Part); Bleaching; Dyeing; Leather, Fur and Textile Treating Compositions.	
COATING, LAMINATING AND PHOTOGRAPHY, GROUP 160—S. N. ZAHARNA, Director	1-12-80
Coating: Processes, Apparatus and Misc. Products; Laminating Methods and Apparatus; Stock Materials; Adhesive Bonding; Special Chemical Manufactures; Special Utility Compositions; and Photography.	
SPECIALIZED CHEMICAL INDUSTRIES AND CHEMICAL ENGINEERING, GROUP 170—R. F. WHITE, Director	5-06-80
Fertilizers; Foods; Fermentation; Analytical Chemistry; Reactors; Sugar and Starch; Paper Making; Glass Manufacture; Gas; Heating and Illuminating; Cleaning Processes; Liquid Purification; Distillation; Preserving; Liquid, Gas, and Solid Separation; Gas and Liquid Contact Apparatus; Refrigeration; Concentrative Evaporators; Mineral Oils Apparatus; Misc. Physical Processes.	
ELECTRICAL EXAMINING GROUPS	
INDUSTRIAL ELECTRONICS, PHYSICS AND RELATED ELEMENTS, GROUP 210—S. W. ENGLE, Director	1-07-80
Generation and Utilization; General Applications; Conversion and Distribution; Heating and Related Art Conductors; Switches; Photography; Motion Pictures; Horology; Acoustics; Recorders; Weighing Scales.	
SPECIAL LAWS ADMINISTRATION, GROUP 220—KENNETH L. CAGE, Director	1-18-80
Ordnance, Firearms and Ammunition; Lubrication; Illumination; Nuclear Reactors; Acoustics, Communications, Optics; Radar; Directional Radio; Torpedoes; Seismic Exploring; Cathode Ray Tube Circuitry; Cryptography; Laser Devices; Radioactive Materials; Powder Metallurgy, Rocket Fuels; Special, Fuel, Explosive and Thermic Compositions; Thermal and Photoelectric Batteries.	
INFORMATION TRANSMISSION, STORAGE, AND RETRIEVAL, GROUP 230—VACANT	1-23-80
Communications; Multiplexing Techniques; Television; Facsimile; Data Processing, Computation and Conversion; Storage Devices and Related Arts.	
RECEPTACLES, SANITATION AND CLEANING, WINDING, AND MEASURING, GROUP 240—A. L. SMITH, Director	12-07-79
Receptacles; Bearings; Joint Packing; Conduits; Switches; Presses; Plumbing Fixtures; Textile Spinning; Cleaning; Food Treating; Agitating; Centrifugal Separating; Geometrical Instruments; Sound Recording; Image Projectors; Web Feeding; Winding and Reeling; Cable Hoists; Measuring and Testing; Indicating; Fluent Material Handling.	
ELECTRONIC COMPONENT SYSTEMS AND DEVICES, GROUP 250—S. S. MATTHEWS, Director	4-20-79
Semi-Conductor and Space Discharge Systems and Devices; Electronic Component Circuits; Wave Transmission Lines and Networks; Optics; Radiant Energy; Measuring.	
DESIGN, GROUP 290—KENNETH L. CAGE, Director	2-08-80
Industrial Arts; Household, Personal and Fine Arts.	
MECHANICAL EXAMINING GROUPS	
HANDLING AND TRANSPORTING MEDIA, GROUP 310—B. R. GRAY, Director	1-09-80
Conveyors; Hoists; Elevators; Article Handling Implements; Store Service; Sheet Feeding; Dispensing; Fluid Sprinkling; Fire Extinguishers; Coin Handling; Check Controlled Apparatus; Classifying and Assorting Solids; Boats; Ships; Aeronautics; Motor and Land Vehicles and Appurtenances; Brakes; Railways and Railway Equipment.	
MATERIAL SHAPING, ARTICLE MANUFACTURING, TOOLS, GROUP 320—M. M. NEWMAN, Director	6-12-79
Manufacturing Processes, Assembling, Combined Machines, Special Article Making; Metal Deforming; Sheet Metal and Wire Working; Metal Fusion-Bonding, Metal Founding; Machine Tools for Shaping or Dividing; Work and Tool Holders, Woodworking; Tools; Cutlery; Jacks; Fishing, Etc.; Butchering; and Books and Printed Matter.	
AMUSEMENT, HUSBANDRY, PERSONAL TREATMENT, INFORMATION, GROUP 330—R. E. AEGERTER, Director	1-30-80
Amusement and Exercising Devices; Projectors; Animal and Plant Husbandry; Plants; Harvesting; Earth Working and Excavating; Tobacco; Artificial Body Members; Dentistry; Jewelry; Surgery; Toiletry; Printing; Typewriters; Information Dissemination.	
HEAT, POWER, AND FLUID ENGINEERING, GROUP 340—D. J. STOCKING, Director	10-22-79
Power Plants; Combustion Engines; Fluid Motors; Reaction Motors; Pumps; Rotary Engines and Pumps; Heat Generation and Exchange; Refrigeration; Ventilation; Drying; Temperature and Humidity Regulation; Couplings; Gearing; Fluid Handling and Control; Lubrication.	
GENERAL CONSTRUCTIONS, TEXTILES, MINING AND GEARING, GROUP 350—G. M. FORLENZA, Director	2-19-80
Building Structures; Racks; Cabinets; Closures; Supports; Furniture; Fasteners; Locks; Pipe Couplings; Joints; Miscellaneous Hardware; Textiles; Sewing Machines; Apparel; Footwear; Earth Engineering; Earth Drilling; Mining; Wells; Roads; Bridges; Tool Driving; Gearing; Machine Elements; Clutches.	

Expiration of patents: The patents within the range of numbers indicated below expire during September 1981, except those which may have expired earlier due to shortened terms under the provisions of Public Law 690, 79th Congress, approved August 8, 1946 (60 Stat. 940) and Public Law 619, 83rd Congress, approved August 23, 1954 (68 Stat. 764), or which may have had their terms curtailed by disclaimer under the provisions of 35 U.S.C. 253. Other patents, issued after the dates of the range of numbers indicated below, may have expired before the full term of 17 years for the same reasons, or have lapsed under the provisions of 35 U.S.C. 151.

Patents . . . . Numbers 3,146,459 to 3,151,328, inclusive
Plant Patents . . . . Numbers 2,444 to 2,448, inclusive

XEROX LICENSE OFFER

This notice is published pursuant to a CONSENT ORDER TO CEASE AND DESIST dated July 29, 1975 between Xerox Corporation and the Federal Trade Commission.

TERMS *contained in this notice are defined in the Consent Order. All interested parties should refer to that document for the definitions and additional details of Xerox' patent and know-how licensing obligations thereunder.* A copy of the Consent Order and a list of PATENTS licensed to Xerox which are subject to the provisions of paragraphs II and IV (C) (9) of the Order, if any, are available from Xerox upon written request. All such requests and any request relating to the licensing of PATENTS and the licensing and disclosure of KNOW-HOW pursuant to the Consent Order should be made in writing and addressed to:

The Manager of Patent Licensing
Xerox Corporation
Stamford, Connecticut 06904

Xerox shall in accordance with the terms of the Consent Order:

(1) Grant licenses under

(a) its ORDER PATENTS to make, have made, use and vend OFFICE COPIER PRODUCTS under the terms of the Consent Order, and

(b) patents which are required to be licensed pursuant to the terms of paragraph X of the Consent Order, if any, and

(2) Disclose certain written materials as provided in the Consent Order [KNOW-HOW] to any LICENSEE of its United States ORDER PATENTS for use in connection with the manufacture of OFFICE COPIER PRODUCTS in the United States upon payment of the cost of collection and duplication of the requested materials.

The following is a list of patents which is believed to include all of the PATENTS available for licensing in accordance with the terms of the Consent Order. Fuji Xerox, Ltd. patents which also make up part of the list are grouped separately. There also follows a classification index for use in conjunction with the classification data appearing in the patent list to identify the category of the patent and a schedule of foreign countries and their corresponding key letters which are used in identifying corresponding foreign patents in the list. Since the classification system is not restricted solely to OFFICE COPIER PRODUCTS there are several patents included in the list to which the Consent Order is not applicable.

LIST CLASSIFICATION

The Patents are listed in numerical order according to their class assignment. For example, all U.S. patents classified as 1(A) appear at the beginning followed by those classified as 1A1, 1A1A, 1A1B, etc. The left-hand column shows the U.S. patent number. To the right of the U.S. patent number is its title followed by its issue date. Following the U.S. patent issue date is a list of the foreign patents based on the U.S. patents. An example of how the list should be used is as follows:

Under Class 1A which is entitled "Electrostatographic Systems, Imaging Systems—Distinctive Photosensitive Members Imaged", two U.S. patents are listed—2,573,881 which issued November 6, 1951 with corresponding patents in Australia, Canada, Germany, Great Britain, Switzerland and Sweden, and 3,877,936 which issued April 15, 1975 with a corresponding patent in Belgium.

XEROX PATENT CLASSIFICATION INDEX

TABLE OF CONTENTS

TABLE OF CONTENTS

9. Transfer From Intermediate Insulating Member
D. Charging Across a Liquid Layer
E. Charging a Semiconductive Photoconductor
F. Charging Including Illumination of Photoconductor

4. OPTICAL IMAGE FORMATION AND PROJECTION
A. Illumination of Original
1. Light Sources and Method of Illumination
2. Document Holders
a. Platen Covers
3. Illumination Control Systems
B. Projection of Optical Image onto Photoresponsive Member
1. Scanning Systems—In General
a. Distinctive Optical Scanning Systems
(1) Lens Strip
(2) Fiber Optics
(3) Half Tone Projection Systems
(4) Fresnel Lens
2. Simultaneous Charging and Projection of Optical Image
3. Distortion of Optical Image (e.g., for Coding Purposes)
4. Full Frame Exposure
5. Reflex Exposure
6. Projection with Variable Magnification
a. Magnification with Fixed Optical Path Length
7. Projection of Composite Image
C. Control of Image Contrast

5. LATENT IMAGE DEVELOPMENT SYSTEMS AND COMPOSITIONS
A. Powder Cloud Development
1. Aerosol Development Methods and Apparatus in General
a. Plate Development Apparatus
2. Cloud Charging Methods and Devices
3. Specific Toner and/or Gas Supply Devices and Methods
a. Belt and Porous Material Toner Supply Device
b. Cloud Directing Devices and Methods
4. Induction Development
5. Cleaning Devices
6. Charcoal Development Method
B. Fibrous Brush Development Devices and Methods
C. Magnetic Brush Development (Dry)
1. Magnetic Brush Development Methods and Devices
a. Magnetic Belt Devices
b. Loading Devices
2. Color Producing Development
3. Single Component Magnetic Developer
D. Cascade Development
1. Gravitational Developer Handling Methods and Devices
a. Incremental (e.g., Bucket Devices)
b. Continuous (e.g., Wheel)
c. Magnetic
d. Non-Linear Developer Flow
2. Impact Developing Methods and Devices
3. Developer Contact and Concentration Control Apparatus
4. Background Suppression Apparatus
5. Flat Plate Development
E. Liquid Development
1. Liquid Aerosol Development
2. Emulsion Development
3. Encapsulated Liquid Development
4. Electrophoretic Development
5. Polar Ink Development
F. Donor Development Methods and Apparatus
G. Dense Bed Development Methods and Apparatus
H. Fluidized Bed Development Methods and Apparatus
I. Toner and Developer Dispensing Methods and Apparatus
1. Developer Dispensing
2. Toner Dispensing
a. Powdered Toner Containers
b. Solid Toner Containers
c. Dispensing Apparatus
(1) Without Concentration Control
(2) With Concentration Control
J. Development Electrodes
1. Electrode Types in General
2. Segmented Electrodes
3. Flexible Electrodes
4. Self-Cleaning Electrodes
5. With Variation of Potential
K. Contrast and Large Area Development Enhancement
L. Simultaneous Positive-Negative Formation
M. Reversal Development
N. Developer, Toner and Carrier Compositions
1. Three Component Developer-Carrier, Toner and Additive
a. Inorganic Additive
b. Organic Additive
2. Two Component Developer
a. Distinctive Toner
(1) Polystyrene-Containing
(2) Phenol-Formaldehyde Containing
b. Distinctive Carrier
3. One Component
4. New Carriers
5. New Toners
a. Distinctive Pigment
b. Encapsulated Liquids
6. Developer Manufacture
a. Carrier Preparation
b. Toner Preparation
O. Miscellaneous
P. Simultaneous Development and Cleaning

6. COPY SUBSTRATE HANDLING SYSTEMS
A. Paper Holding Trays
1. With Stack Height Control
B. Seriatim Stack Feeding Devices
1. Mechanical
2. Aeriform
C. Non-Seriatim Stack Feeding Devices
D. Sheet Tracking, Registration, Aligning, Conveying Devices
1. Belt Conveyors
2. Clutch Mechanisms
E. Sheet Holding Devices (During Image Transfer)
F. Mispuff and Multiple Sheet Detecting Devices
G. Counter Devices
H. Sheet Stripping Devices
I. Sheet Cutting Devices
J. Sheet Inverting Devices

K. Copy Distribution, Collection and Sorting Devices

7. DEVELOPED IMAGE TRANSFER AND DISPLAY
A. Image Display Systems
1. Reflective Projection
2. Transmittive Projection
B. Chemical Treatment to Enhance Transfer
C. Electrostatic Transfer of Toner
1. Corona Charging Systems
a. With Conductive Transfer Web
2. A.C. Field Transfer
3. Multiple Transfer
4. Selective Transfer
D. Magnetic Transfer of Toner
E. Pressure Transfer of Toner
1. With Heat
2. With Solvent
3. With Tackified Copy Substrate
a. Gelatin Coated Substrate

8. IMAGE FIXING SYSTEMS
A. Heat Fixation
1. Radiation
a. Flash Heating
b. Control Systems
c. Glass Panel Heating
2. Conduction
a. With Pressure Means
3. Convection
4. Induction
B. Fixation with Vapor Fixative
1. Fixative Removal
C. Fixation with Liquid Fixative
D. Fixation with Solid Fixative
E. Fixation with Pressure
1. Gelatin Coated Copy Substrate

9. CLEANING OF IMAGING SURFACE
A. Frictional
1. Web
2. Brush
a. With Brush Scraper
b. With Electrostatic Assist
(1) Within a Liquid
c. Filter Bag For Use with
B. Non-Frictional
1. Magnetic Brush
2. Cleaning Beads
3. Liquid

10. DOCUMENT HANDLING
A. Document Feed Apparatus
B. Microfiche Handling Systems
C. Stack Feeding Apparatus
D. Facsimile Feeding Apparatus
E. Document Registration Systems
F. Document Inverting Apparatus
G. Stacking and/or Imbricating Apparatus
H. Collating Apparatus
I. Document Jamming Detection Devices

12. PHOTOELECTROPHORESIS
A. Basic Process and Materials
B. Basic Apparatus
C. Machines
D. Air Breakdown
E. Blocking Electrode
F. Camera Apparatus
G. Cleaning
H. Apparatus Components
I. Composite Particle
J. Fixing
K. Inking
L. Masking
M. Pigments (Including PEP Use of Particular Pigment)
N. Process Variation
O. Sensitizors
P. Shear
Q. Transfer
R. Use of Image

15. IMAGING SYSTEMS OTHER THAN ELECTROSTATOGRAPHIC
A. Deformation Imaging
B. Polymerization Imaging
1. Photopolymerization Imaging
2. Charge Injection Polymerization Imaging
C. Ferromagnetic Imaging
D. Photochromic Imaging
E. Vesicular Imaging
F. Exposure Only Imaging

17. OPTICAL SYSTEMS
A. Radiation Sensing
1. X-ray, Ultraviolet
2. Solar Cell
3. Spectral Response Junctions
4. Photocell Circuits
B. Optical Projection and Modulation
1. Image Projection
2. Lenses, Transparencies
3. Kerr Cell
4. Modulators
C. Image Conversion and Intensification
1. Emission
2. Infrared
3. Passive
4. Active (Semiconductor)
D. Character Generation and Display Devices
1. Deflection Generated Display
2. Character Mask
3. Translation and Function Generation
4. Justifier
5. Optical Lens Arrangements
E. Optical Imaging and Scanning
1. Photosensitive Scanners and Spot Scanning Systems
2. Field Effect Scanners
3. Lenticular
4. Scanning Lens Strip and Rotating Mirror Mechanisms
5. Thermotropic, Thermal, Deformation
6. Optical Stabilizing Devices
F. Electron Beam Devices
1. Tubes
2. Circuits
G. Electroluminescent Devices
1. Storage with Field Effect Device
2. Storage Panels—Construction
3. Display, Actuation
4. Enhancement, Amplifications, Conversion
H. Stimulated Emission Devices
1. Laser Structure and Materials

2. Laser Structures
3. Laser Optical Systems and Applications

I. Optical Devices
1. Pressure Gauge
2. Density Measuring
3. Fiber Optics

J. Miscellaneous

18. CHEMICAL COMPOSITIONS AND PREPARATION THEREOF

A. Photosensitive
1. With a Liquid Vehicle
2. Phthalocyanine
a. X-Form
3. Carboxamides
4. Naphthols

B. Polymers

C. Developer, Toner and Carrier Compositions
1. Three Component Developer-Carrier, Toner and Additive
a. Inorganic Additive
b. Organic Additive
2. Two Component Developer
a. Distinctive Toner
(1) Polystyrene-Containing
(2) Phenol-Formaldehyde Containing
b. Distinctive Carrier
3. One Component Developer
4. New Carriers
5. New Toners
a. Distinctive Pigment
b. Encapsulated Liquids
6. Developer Manufacture
a. Carrier Manufacture
b. Toner Preparation

D. Brazing Compositions

20. MECHANICAL COMPONENTS

A. Mechanical Reaction Devices
1. Belts
2. Drives
3. Pulleys and Rollers
4. Load Movers
5. Clutch
6. Transport Motor and Speed Controls

B. Dispensing and Filtering Devices
1. Powder Cloud
2. Particulate Material Dispensing, Distribution
3. Filtering

C. Sensing Devices
1. Powder Level
2. Temperature
3. Quality (Web)
4. Pressure Gauge
5. Wind
6. Weight
7. Thickness

D. Work Devices (Mechanical)
1. Holding, Forming, Feeding
2. Bonding and Fastening
3. Coupling (Pipe)
4. Testing
5. Molding
6. Valves
7. Sizing

E. Antenna Structure

F. Fluid Amplifiers and Magnetically Controllable Switching Devices

G. Miscellaneous

21. METAL WORKING, FORMING AND TREATING

A. Electroforming and Plating
1. Methods
2. Structure
3. Apparatus

B. Metal Treating

24. GRAPHIC ARTS

A. Liquid Ink Recording
1. Electrically Responsive System
2. Electromechanically Responsive System
3. Magnetically Responsive System
4. Photoresponsive System

B. Photographic Copying
1. Transparency Formation
a. Document Support
b. Projection and Exposure
(1) Simultaneous Exposure and Development of Different Frames
(2) Image Reversal Optics
(3) Automatic Masking
c. Transparency Identification
d. Frame Counting and Locating
e. Miscellaneous
2. Contact Printing From a Transparency
a. Transparency Feed
b. Establishing and Maintaining Contact Between Transparency and Copy Material
c. Exposure Control
d. Transfer Imaging
(1) Image Layer Support Strip
3. Processing
a. Material Purification
b. Transparency Transport
4. Viewing

C. Duplicating
1. Method and Apparatus
a. Thermographic
b. Pressure Applied to Sandwich of Original, Transfer and Receiving Sheet
c. Transfer of Electrostatic Charge Through Stencil
d. Condensation Imaging
e. Spirit and Dry Duplicating Systems (Including ELCAR)
(1) Means for Rotably Mounting a Transfer Sheet
(2) Means for Establishing Pressure Between Transfer Sheet and Copy Substrate
(3) Copy Substrate Handling
(4) Program Control
(5) Formation of a Spirit Duplicating Transfer Sheet
(6) Formation of a Stencil Transfer Sheet
(7) Composition of a Transfer Sheet, Receiving Sheets and Printing Inks

D. Planographic Imaging (Including Lithography)

E. Relief Imaging

F. Gravure Printing

G. Miscellaneous

25. ELECTRONIC COMPONENTS

A. Passive Components
1. Printed Circuit Boards
2. Semiconductor Devices
3. Thin Film Components
4. Connectors

B. Active Components

1. Space Charge Devices
2. Junction Devices
3. Thermionic Conversion Devices
4. Thyratrons

C. Circuits
1. Amplifiers
2. Switching
3. Oscillators and Generators
4. Pulse Circuitry, Including Signal Storage and Delay
5. Power Supply
6. Miscellaneous

26. DESIGN PATENTS

A. Reproduction Apparatus
1. In General
2. Document Feeding Apparatus
3. Transfer and Fusing Apparatus
4. Printer
5. Camera

B. Sorting and/or Storing Apparatus

C. Containers for Xerographic Powder

D. Labeling Apparatus

E. Facsimile Transmission Apparatus
1. In General
2. Transceiver Paper Feed Apparatus
3. Adapter for Facsimile Computer System

F. Microform Apparatus
1. Viewer and/or Copier

G. Educational Devices
1. Scales

H. Miscellaneous
1. Housing For Electronic Apparatus
2. Computer Keyboard
3. Send/Receive Data Printer Terminal
4. Telephone Acoustic Coupler
5. Prism
6. Paper Shredder
7. Other

27. PHOTOGRAPHY

A. Direct Printout Members
B. Direct Printout Processes
C. Imaging Member Fabrication
D. Photographic Processes Generally

30. MANIFOLD

A. Basic Process
B. Apparatus
C. Process Variations
D. Activation
E. Image Transfer and Fixing
F. Duplication Masters
G. Image Reversal
H. Reflex Imaging
I. Color Processes

31. MIGRATION IMAGING (XDM)

A. Basic Process
B. Apparatus
C. Process Variation
D. Imaging Members
E. Imaging Member Fabrication
F. Imaged Members
G. Stripping and Splitting
H. Reversal
I. Fixing
J. Duplicating Masters
K. Color
L. Use of Image

32. MISCELLANEOUS

A. Energy Cells
B. Miscellaneous

FOREIGN COUNTRY KEY LETTER CODE

COUNTRY KEY	COUNTRY NAME
AAA	NO FOREIGN FILING
ALB	ALBANIA
ALG	ALGERIA
ARG	ARGENTINA
ATR	AUSTRIA
AUS	AUSTRALIA
BAH	BAHAMAS
BAR	BAHRAIN
BEL	BELGIUM
BOL	BOLIVIA
BRA	BRAZIL
BRS	BR. SOLOMON ISL.
BRU	BRUNEI
BUL	BULGARIA
BUR	BURUNDI
CAM	CAMBODIA
CAN	CANADA
CEY	CEYLON
CHL	CHILE
CHN	CHINA
CLB	COLOMBIA
COR	CONGO REP. (ZAIRE)
COS	COSTA RICA
CUB	CUBA
CZC	CZECHOSLOVAKIA
DNK	DENMARK
DOR	DOMINICAN REP.
ECD	ECUADOR
EGP	EGYPT
EGR	E. GERMANY
EIR	EIRE
ELS	EL SALVADOR
FIJ	FIJI
FIN	FINLAND
FOM	FORMOSA
FRA	FRANCE
GER	GERMANY
GHA	GHANA
GIB	GIBRALTAR
GIE	GIBERT & ELLICE
GNR	GUINEA REP.
GRB	GR. BRITAIN
GRK	GREECE
GUA	GUATEMELA
GUR	GUERNSEY
HGK	HONG KONG
HOL	HOLLAND
HON	HONDURAS
HUN	HUNGARY
ICE	ICELAND
IDS	INDONESIA
IND	INDIA
IRL	IRELAND
IRN	IRAN
ISR	ISRAEL
ITL	ITALY
JAM	JAMAICA
JAP	JAPAN
JER	JERSEY

COUNTRY KEY	COUNTRY NAME
KEN	KENYA
KOR	KOREA
KUW	KUWAIT
LAS	LAOS
LEB	LEBANON
LIB	LIBERIA
LXB	LUXEMBOURG
MAU	MAURITIUS
MEX	MEXICO
MLI	MALI
MLS	MALASIA
MLT	MALTA
MLW	MALAWI
MNC	MONACO
MRC	MOROCCO
NIG	NIGERIA
NOR	NORWAY
NZL	NEW ZEALAND
PAK	PAKISTAN
PLD	POLAND
PLP	PHILIPPINES
PNM	PANAMA
PRU	PERU
PTG	PORTUGAL
RHD	RHODESIA
RMN	RUMANIA
RWD	RWANDA
SAB	SAUDI ARABIA
SAF	SOUTH AFRICA
SBH	SABAH
SGP	SINGAPORE
SHL	ST. HELENA
SLN	SIERRA LEONE
SPN	SPAIN
SRK	SARAWAK
STZ	SWITZERLAND
SWA	SO. WEST AFRICA
SWD	SWEDEN
SYA	SYRIA
TGR	TANGIER
THL	THAILAND
TIW	TAIWAN
TNS	TUNIS
TRD	TRINIDAD
TRK	TURKEY
TZN	TANZANIA
UGD	UGANDA
UK	UNITED KINGDOM (Fuji Xerox list only)
URG	URUGUAY
USA	USA
USR	USSR
UAR	UNITED ARAB REP.
VTM	VIETNAM
VZL	VENEZUELA
YGS	YUGOSLAVIA
ZMB	ZAMBIA
ZZZ	

FUJI XEROX PATENTS

Class 1A1C

3,569,803.—ELECTROPHOTOGRAPHIC PROCESS UTILIZING FRICTION CHARGING. MAR. 9, 1971. BEL. 719365, CAN. 925561, FRA. 1577647, U.K. 1232470.

3,573,905.—METHOD OF PRODUCING ELECTROPHOTOSENSITIVE CADMIUM SULFIDE WITH CRYSTALS OF A HEXAGONALITY OF LESS THAN 80%. APR. 6, 1971. BEL. 682886, CAN. 814845, FRA. 1526846, JAP. 43-16195, MEX. 93082, U.K. 1148487.

3,775,103.—ELECTROPHOTOGRAPHIC MATERIAL AND PROCESS FOR PRODUCING SAME. NOV. 27, 1973. BEL. 693919, FRA. 1511300, GER. 1,522,612, ITL. 798303, NOR. 122730, U.K. 1,183,762.

3,775,106.—ELECTROPHOTOGRAPHIC PROCESS. NOV. 27, 1973. BEL. 771855, CAN. 946465, JAP. 49-17531, U.K. 1328318.

Class 1A1F

3,705,032.—ELECTROPHOTOGRAPHIC MATERIALS. DEC. 5, 1972. AUS. 432027, BEL. 737701, CAN. 918984, FRA. 6928605, GER. 1942383, ITL. 872749, JAP. 48-2966, U.K. 1237036.

Class 1A2

4,105,466.—ORGANIC PHOTOCONDUCTIVE COATING COMPOSITIONS CONTAINING TRICYANOVINYL COMPOUNDS FOR ELECTROPHOTOGRAPHY. AUG. 8, 1978. U.K. 1531921.

Class 1A2C

3,660,086.—ELECTROPHOTOGRAPHIC PLATE AND PROCESS EMPLOYING INORGANIC PHOTOCONDUCTIVE MATERIAL WITH A PHOTOCHROMIC SENSITIZING AGENT. MAY 2, 1972. U.K. 1290441.

3,799,773.—ELECTROPHOTOGRAPHIC PROCESS EMPLOYING A PHOTOCHROMIC COMPOUND AND TRANSPARENT TONER. MAR. 26, 1974.

Class 1A6

3,787,235.—METHOD OF ELECTROPHOTOGRAPHIC SENSITIVE PAPER. JAN. 22, 1974. JAP. 48-1330.

4,197,119.—ELECTROPHOTOGRAPHIC PROCESS. APR. 8, 1980.

Class 1C4B

3,563,733.—METHODS OF PREPARING RELIEF IMAGES BY ENZYMATIC DIGESTION. FEB. 16, 1971. BEL. 709856, CAN. 830395, FRA. 1564578, JAP. 46-11628, U.K. 1217087.

3,630,728.—ELECTROPHOTOGRAPHIC METHOD OF FORMING RELIEF IMAGES. DEC. 28, 1971. BEL. 728693, CAN. 877883, FRA. 2002.362, JAP. 46-41348, U.K, 1228509.

Class 1E

3,549,359.—COLOR ELECTROPHOTOGRAPHY EMPLOYING DYE TRANSFER FROM A DYE-CONTAINING PHOTOSENSITIVE LAYER TO AN IMAGE RECEIVING SHEET. DEC. 22, 1970. FRA. 1524473, GER. 1,572,341, JAP. 45-40159, U.K. 1,183,532.

3,615,391.—ELECTROPHOTOGRAPHIC COLOR DEVELOPING METHOD. OCT. 26, 1971. AUS. 435735, CAN. 842157, FRA. 1572518, JAP. 46-21996, U.K. 1231846, U.K. 1257609.

3,615,392.—ELECTROPHOTOGRAPHIC REPRODUCTION OF ORIGINALS CONTAINING BOTH MULTICOLOR AND LINE AREAS. OCT. 26, 1971. CAN. 902986, JAP. 46-43951.

3,654,865.—METHOD FOR FORMING DYE IMAGE USING AN ELECTROPHOTOGRAPHIC DEVELOPER CONTAINING A GELATIN TONER. APR. 11, 1972. AUS. 435812, BEL. 745534, CAN. 924.951, FRA. 7004034, ITL. 888.447, JAP. 48-9017, U.K. 1257296.

3,656,947.—CODING OF ORIGINALS AND SENSITIVE PAPER IN A MULTI-COLOR ELECTROPHOTOGRAPHIC PROCESS. APR. 18, 1972. BEL. 748591, CAN. 902987, FRA. 7012518, JAP. 48-26778, U.K. 1309644.

3,672,887.—ELECTROPHOTOGRAPHIC PROCESS FOR MULTICOLOR REPRODUCTION. JUNE 27, 1972. JAP. 47-19395.

3,687,661.—COLOR ELECTROPHOTOGRAPHIC PROCESS. AUG. 29, 1972. CAN. 925929, JAP. 48-28697.

3,689,260.—COLOR ELECTROPHOTOGRAPHIC PROCESS WITH RESIN DEPOSITION FOR STABILIZATION OF TONER IMAGE. SEPT. 5, 1972. AUS. 437666, BEL. 7531555, CAN. 927649, FRA. 7025295, ITL. 910210, JAP. 48-26779, U.K. 1279506.

3,705,767.—ELECTROPHOTOGRAPHIC DEVICE. DEC. 12, 1972. BEL. 753687, CAN. 947357, FRA. 7026800, GER. 2036140, ITL. 902477, JAP. 48-11054, U.K. 1266112.

3,779,639.—COLOR ELECTROPHOTOGRAPHIC APPARATUS. DEC. 18, 1973. U.K. 1331870.

3,785,812.—METHOD OF EXPOSURE IN MULTI-COLOR ELECTROPHOTOGRAPHY. JAN. 15, 1974. ARG. 185812, AUS. 417288, BEL. 759392, CAN. 945619, FRA. 7042329, ITL. 914549, JAP. 49-23905, U.K. 1322847.

3,806,340.—COLOR ELECTROPHOTOGRAPHIC PROCESS EMPLOYING A POLAR ORGANIC SOLVENT VAPOR. APR. 23, 1974. BEL. 774765, CAN. 946671, FRA. 7138742, JAP. 49-23905, U.K. 1322847.

Class 1F

3,473,923.—REPRODUCTION PROCESS INCLUDING TRANSFER AND REDEVELOPMENT OF ELECTROSTATICALLY FORMED IMAGES. OCT. 21, 1969. BEL. 679506, FRA. 1479592, GER. 1,522,597. JAP. 43-07586, U.K. 1152832.

3,745,002.—METHOD OF PREPARING A PRINTING MASTER BY XEROGRAPHY. JULY 10, 1973. ARG. 120543, AUS. 432568, BEL. 756.595, CAN. 903014, FRA. 2068748, JAP. 48-27362, MEX. 119463, U.K. 1314109.

3,788,845.—PROCESS FOR FORMING DYE IMAGES. JAN. 29, 1974.

Class 1G

3,764,309.—COLOR PRINTING METHOD. OCT. 9, 1973. BEL. 724581, CAN. 877884, FRA. 1595848, ITL. 848192, JAP. 46-33541, U.K. 1223020.

Class 1G1

4,151,604.—IMAGE STORAGE AND OPTICAL READ-OUT DEVICE HAVING STRIPED ELECTRODES. APR. 24, 1979.

Class 1I

3,762,811.—METHOD AND APPARATUS FOR ELECTROPHOTOGRAPHY. OCT. 2, 1973.

3,784,301.—ELECTROPHOTOGRAPHIC BORDER APPARATUS. JAN. 8, 1974. JAP. 49-26590.

Class 1J1A

4,260,878.—MANAGEMENT SYSTEM FOR COPYING MACHINES. APR. 7, 1981.

4,275,941.—SECURITY DEVICE FOR OPERATION PANEL. JUNE 30, 1981.

Class 1J6

3,796,187.—APPARATUS FOR DEVELOPING CONTINUOUS ELECTROPHOTOGRAPHIC PHOTOSENSITIVE WEB MATERIAL. MAR. 12, 1974. BEL. 769412, CAN. 934541, FRA. 7123852, ITL. 934462, U.K. 1332534.

Class 1K

3,408,217.—FINGERPRINT RECORDING. OCT. 29, 1968. JAP. 41-21520, U.K. 1095572.

3,492,140.—METHOD OF RECORDING FINGERPRINTS OF HUMAN BODY. JAN. 7, 1970. FRA. 1386116, JAP. 39-27575, U.K. 1063635.

Class 1K3

3,745,002.—METHOD OF PREPARING A PRINTING MASTER BY XEROGRAPHY. JULY 10, 1973. ARG. 120543, AUS. 432568, BEL. 756.595, CAN. 903014, FRA. 2068748, JAP. 48-27362, MEX. 119463, U.K. 1314109.

Class 2A1B

4,170,476.—LAYERED PHOTOCONDUCTIVE ELEMENT HAVING AS AND/OR TE DOPED WITH GA, IN OR

TL INTERMEDIATE TO SE AND INSULATOR. OCT. 9, 1979. U.K. 1535629.

Class 2A1E

3,506,595.—PHOTOCONDUCTIVE INSULATING MATERIALS. APR. 14, 1970. FRA. 1498064, GER. 1,522,606, JAP. 43-24394, U.K. 1148537.
3,615,401.—PROCESS FOR THE PREPARATION OF PHOTOCONDUCTIVE LIGHT-SENSITIVE MATERIALS COMPRISING CdS OR CdS.N $CdCo_3$. OCT. 26, 1971. FRA. 2001257, JAP. 47-40819, U.K. 1239129.
3,615,410.—ELECTROPHOTOGRAPHIC LIGHT-SENSITIVE MATERIAL CONTAINING A PROTEASE ENZYME. OCT. 26, 1971. BEL. 730415, CAN. 885386, FRA. 2004.940, U.K. 1224711.

Class 2A1E1

3,385,699.—PROCESS FOR PROCESSING ELECTROPHOTOSENSITIVE LAYERS. MAY 28, 1968. BEL. 651039, FRA. 1402385, HOL. 130806, SWD. 310458, U.K. 1072476.
3,494,766.—LIGHT SENSITIVE LAYER FOR ELECTROPHOTOGRAPHY. FEB. 10. 1970. CAN. 791648, FRA. 1460449, NOR. 112288, SWD. 226000, U.K. 1085939.
3,494,789.—PHOTOCONDUCTIVE INSULATING MATERIAL. FEB. 10, 1970. CAN. 813830, FRA. 1564467, ITL. 788829, JAP. 44-10631, MEX. 88112, U.K. 1120091.
3,615,410.—ELECTROPHOTOGRAPHIC LIGHT-SENSITIVE MATERIAL CONTAINING A PROTEASE ENZYME. OCT. 26, 1971. BEL. 730415, CAN. 885386, FRA. 2004.940, U.K. 1224711.
3,634,333.—PROCESS FOR COATING ZINC OXIDE POWDER WITH CADMIUM SULFIDE. JAN. 11, 1972. BEL. 731056, CAN. 882.627, FRA. 2.005.849, GER. 1916761, JAP. 47-49616, U.K. 1215685.
3,660,086.—ELECTROPHOTOGRAPHIC PLATE AND PROCESS EMPLOYING INORGANIC PHOTOCONDUCTIVE MATERIAL WITH A PHOTOCHROMIC SENSITIZING AGENT. MAY 2, 1972. U.K. 1290441.
3,674,476.—PROCESS FOR PRODUCING PHOTOCONDUCTIVE LAYER FOR ELECTROPHOTOGRAPHY. JULY 4, 1972. BEL. 751.676, CAN. 918481, FRA. 2051030, U.K. 1264719.
3,689,260.—COLOR ELECTROPHOTOGRAPHIC PROCESS WITH RESIN DEPOSITION FOR STABILIZATION OF TONER IMAGE. SEPT. 5, 1972. AUS. 437666, BEL. 753155, CAN. 927649, FRA. 7025295, ITL. 910210, JAP. 48-26779, U.K. 1279506.
3,707,392.—METHOD OF SENSITIZATION OF AN ELECTROPHOTOGRAPHIC MATERIAL. DEC. 26, 1972. AUS. 444836, BEL. 744600, CAN. 888125, FRA. 7001955, GER. 2002607, ITL. 892368, JAP. 48-7814, U.K. 1257154.
3,725,060.—HEMATEIN OR HEMATOXYLIN-CONTAINING ZINC OXIDE PHOTOCONDUCTIVE LAYERS. APR. 3, 1973. JAP. 49-4340.
3,761,261.—PHTHALOCYANINE DYE SENSITIZERS FOR ZINC OXIDE. SEPT. 25, 1973. JAP. 45-990335.

Class 2A1F

3,394,001.—ELECTROPHOTOGRAPHIC SENSITIVE CONTAINING ELECTRON DONOR DYE LAYERS. JULY 23, 1968. JAP. 44-15758, U.K. 1,106,562.
3,476,659.—ELECTROPHOTOGRAPHIC IMAGING AND COPYING PROCESS. NOV. 4, 1969. BEL. 684406, FRA. 1489929, ITL. 773333, JAP. 43-27579, U.K. 1159394.
3,654,865.—METHOD FOR FORMING DYE IMAGE USING AN ELECTROPHOTOGRAPHIC DEVELOPER CONTAINING A GELATIN TONER. APR. 11, 1972. AUS. 435812, BEL. 745534, CAN. 924.951, FRA. 7004034, ITL. 888.447, JAP. 48-9017, U.K. 1257296.
3,704,123.—DYE SENSITIZED PHOTOCONDUCTIVE MATERIAL. NOV. 28, 1972. AUS. 424510, BEL. 720260, CZC. 142206, FRA. 1568416, GER. 1772210, ITL. 831114, JAP. 47-20753, U.K. 1190676, USR. 374866.
3,705,032.—ELECTROPHOTOGRAPHIC MATERIALS. DEC. 5, 1972. AUS. 432027, BEL. 737701, CAN. 918984, FRA. 6928605, GER. 1942383, ITL. 872749, JAP. 48-2966, U.K. 1237036.
3,707,392.—METHOD OF SENSITIZATION OF AN ELECTROPHOTOGRAPHIC MATERIAL. DEC. 26, 1972. AUS. 444836, BEL. 744600, CAN. 888125, FRA. 7001955, GER. 2002607, ITL. 892368, JAP. 48-7814, U.K. 1257154.

Class 2A1G

3,541,028.—PHOTOCONDUCTIVE INSULATING MATERIALS. NOV. 17, 1970. FRA. 1494699, GER. 1,522,605, JAP. 43-14494, U.K. 1128417.

Class 2A2

3,647,428.—PHOTOCONDUCTIVE MATERIAL FOR ELECTROPHOTOGRAPHY. MAR. 7, 1972. AUS. 429949, BEL. 759550, CAN. 924162, FRA. 2072521, ITL. 923181, JAP. 48-4316, U.K. 1269429.
3,704,119.—ELECTROPHOTOGRAPHIC PROCESS USING TONER OF SAME REFRACTIVE INDEX AS ORGANIC PHOTOCONDUCTIVE LAYER. NOV. 28, 1972. AUS. 433360, BEL. 754544, FRA. 7028556, ITL. 902771, JAP. 48-21054, U.K. 1321065.

Class 2A2A

3,707,369.—PHOTOCONDUCTIVE ELEMENTS CONTAINING 2-METHYL-3, 3-DIMETHYL INDOLE DERIVATIVES. DEC. 26, 1972. BEL. 754969, CAN. 898823, FRA. 703049, GER. 2041490, U.K. 1268889.
4,209,579.—ELECTROPHOTOGRAPHIC PHOTOSENSITIVE MATERIAL WITH A QUINOCYANINE PIGMENT. JUNE 24, 1980.
4,218,529.—ELECTROPHOTOGRAPHIC PHOTOSENSITIVE MATERIAL HAVING A QUINOCY ANINE PIGMENT PHOTOCONDUCTOR. AUG. 19, 1980.
2,264,694.—PHOTOSENSITIVE MEDIUM FOR ELECTROPHOTOGRAPHY HAVING A CYANINE PHOTOCONDUCIVE PIGMENT. APR. 28, 1981.

Class 2B

3,394,001.—ELECTROPHOTOGRAPHIC SENSITIVE MATERIAL CONTAINING ELECTRON-DONOR DYE LAYERS. JULY 23, 1968. JAP. 44-15758, U.K. 1,106,562.
3,656,949.—METHOD OF PRODUCING AN ELECTROPHOTOGRAPHIC AND ELECTROGRAPHIC RECORDING MEMBER. APR. 18, 1972. BEL. 734288, CAN. 890875, FRA. 6919148, GER. 1929162, JAP. 48-787, U.K. 1259158.
3,704,121.—ELECTROPHOTOGRAPHIC REPRODUCTION PROCESS USING A DUAL LAYERED PHOTORECEPTOR. NOV. 28, 1972. BEL. 739153, FRA. 6932116, ITL. 890989, JAP. 49-25218, SPN. 371685, STZ. 519188, U.K. 1272131.
4,023,181.—RECORDING MEDIUM CONDUCTIVE ELECTRODE. MAY 10, 1977. JAP. 49-91720.
4,042,936.—ELECTROSENSITIVE RECORDING METHOD. AUG. 16, 1977. JAP. P49-042206.

Class 2B1

3,574,682.—ELECTROSTATIC RECORDING MATERIALS. APR. 13, 1971. U.K. 1213395.
3,787,235.—METHOD OF ELECTROPHOTOGRAPHIC SENSITIVE PAPER. JAN. 22, 1974. JAP. 48-1330.

Class 2B2

3,552,956.—METHOD FOR TREATING ELECTROPHOTOGRAPHIC RECORDING MATERIALS WITH PROTECTIVE OVERCOATINGS. JAN. 5, 1971. BEL. 693184, FRA. 1508918, SWD. 326372, U.K. 1155665.
3,717,461.—REMOVAL OF PROTECTIVE RESIN LAYER BY LIQUID DEVELOPER IN ELECTROPHOTOGRAPHIC IMAGING. FEB. 20, 1973. ARG. 182091, AUS. 428797, BEL. 762.808, CAN. 929016, FRA. 2078511, ITL. 919801, MEX. 120941, U.K. 1326300.

Class 2B4

3,428,453.—IMAGING FORMING PROCESS UTILIZING XEROGRAPHY. FEB. 18, 1969. FRA. 1,428,775, ITL. 754,825, JAP. 43-02622, U.K. 1,085,151.

Class 2E

3,417,733.—APPARATUS FOR VACUUM COATING. DEC. 24, 1968. FRA. 1,415,251, GER. 1,521,238, JAP. 40-26402, U.K. 1,081,324.
3,573,905.—METHOD OF PRODUCING ELECTROPHOTOSENSITIVE CADMIUM SULFIDE WITH CRYSTALS OF A HEXAGONALITY OF LESS THAN 80% APR. 6, 1971. BEL. 682886, CAN. 814845, FRA. 1526846, JAP. 43-16195, MEX. 93082, U.K. 1148487.
3,656,949.—METHOD OF PRODUCING AN ELECTROPHOTOGRAPHIC AND ELECTOGRAPHIC RECORDING MEMBER. APR. 18, 1972. BEL. 734288, CAN. 890875, FRA. 6919148, GER. 1929162, JAP. 48-787, U.K. 1259158.
3,672,988.—METHOD OF MANUFACTURING BASES FOR ELECTROSTATIC RECORDING MATERIAL OR ELECTROPHOTOGRAPHIC MATERIAL. JUNE 27, 1972. AUS. 437336, BEL. 746420, CAN. 898621, GER. 2008636, ITL. 888758, JAP. 47-45549, U.K. 1301926.

3,674,476.—PROCESS FOR PRODUCING PHOTOCONDUCTIVE LAYER FOR ELECTROPHOTOGRAPHY. JULY 4, 1972. BEL. 751.676, CAN. 918481, FRA. 2051030, U.K. 1264719.
3,772,173.—ELECTROCONDUCTIVE PAPER. NOV. 13, 1973. CAN. 930693, JAP. 48-15037, U.K. 1329569.
3,775,103.—ELECTROPHOTOGRAPHIC MATERIAL AND PROCESS FOR PRODUCING SAME. NOV. 27, 1973. BEL. 693919, FRA. 1511300, GER. 1522612, ITL. 798303, NOR. 122730, U.K. 1183762.
3,927,638.—VACUUM EVAPORATION PLATING APPARATUS. DEC. 23, 1975.
3,984,585.—VACUUM EVAPORATION PLATING METHOD. MAY 5, 1976. FRA. 7422500, GER. P-2430653.4, JAP. 48-72263, U.K. 1,214,698.

Class 2F

3,998,548.—SENSITIVE DRUM RECEIVING DEVICE FOR USE IN ELECTROPHOTOGRAPHIC REPRODUCING MACHINE. DEC. 21, 1976. JAP. 49-94060, U.K. 32984/75.

Class 3

3,764,207.—ELECTROPHOTOGRAPHIC PROCESS UTILIZING SINGLE CHARGING MEANS FOR EFFECTING SIMULTANEOUS FUNCTIONS OF CHARGING AND FACILITATING TONER IMAGE TRANSFER. OCT. 9, 1973.

Class 3C

3,612,864.—IMAGING SYSTEM UTILIZING AN ELECTRODE TREATED WITH A MIXTURE OF A HYGROSCOPIC MATERIAL AND A HYDROPHILIC BINDER. OCT. 12, 1971. BEL. 726690, CAN. 885615, JAP. 47-12440.
3,775,106.—ELECTROPHOTOGRAPHIC PROCESS. NOV. 27, 1973. BEL. 771855, CAN. 946465, JAP. 49-17531, U.K. 1328318.

Class 3C1

3,772,173.—ELECTROCONDUCTIVE PAPER. NOV. 13, 1973. CAN. 930693, JAP. 48-15037, U.K. 1329569.

Class 3C3

3,649,830.—UNIFORM CHARGING METHOD AND APPARATUS USING AN ARRAY OF NEEDLE ELECTRODES. MAR. 14, 1972. CAN. 940590, JAP. 48-28301, U.K. 1279758.
3,655,966.—ELECTRIC CHARGING DEVICE FOR ELECTROPHOTOGRAPHY. APR. 11, 1972. CAN. 922359, JAP. 48-25942, U.K. 1323599.

Class 3C4

3,719,481.—ELECTROSTATOGRAPHIC IMAGING PROCESS. MAR. 6, 1973. CAN. 948693, FRA. 7108391, ITL. 921208, U.K. 1281149.

Class 3C5

3,715,640.—CORONA CHARGING PROCESS AND APPARATUS IN ELECTROPHOTOGRAPHY. FEB. 6, 1973. AUS. 425637, BEL. 765716, CAN. 927473, FRA. 71131128, ITL. 923947, JAP. 49-17379, U.K. 1338691.
3,779,749.—METHOD OF CHARGING IN ELECTROPHOTOGRAPHY. DEC. 18, 1973. BEL. 772412, CAN. 9481495, FRA. 7132246, ITL. 942080, JAP. 49-17532, U.K. 1359182.
3,788,844.—CHARGING METHOD FOR ELECTROPHOTOGRAPHY. JAN. 29, 1974. JAP. 49-13025, U.K. 1344908.
3,789,222.—CORONA CHARGE METHOD. JAN. 29, 1974. BEL. 771311, CAN. 943180, FRA. 7129655, ITL. 933902, JAP. 49-17530.
3,789,224.—PROCESS FOR CHARGING ELECTROPHOTOGRAPHIC MATERIALS. JAN. 29, 1974. AUS. 435928, BEL. 772465, CAN. 945834, FRA. 7132445, ITL. 938023, JAP. 49-23902, U.K. 1359181.

Class 3C9

3,582,731.—CHARGING SYSTEM. JUNE 1, 1971. CAN. 906045, JAP. 46-30636.

Class 3D

3,546,545.—METHOD OF CHARGING A PHOTOCONDUCTIVE INSULATING LAYER. DEC. 8, 1970. BEL. 721040, FRA. 1586221, U.K. 1205297.
3,569,803.—ELECTROPHOTOGRAPHIC PROCESS UTILIZING FRICTION CHARGING. MAR. 9, 1971. BEL. 719365, CAN. 925561, FRA. 1577647, U.K. 1232470.

Class 3E

3,704,121.—ELECTROPHOTOGRAPHIC REPRODUCTION PROCESS USING A DUAL LAYERED PHOTORECEPTOR. NOV. 28, 1972. BEL. 739153, FRA. 6932116, ITL. 890989, JAP. 49-25218, SPAN. 371685, STZ. 519188, U.K. 1272131.
3,715,640.—CORONA CHARGING PROCESS AND APPARATUS IN ELECTROPHOTOGRAPHY. FEB. 6, 1973. AUS. 425637, BEL. 765716, CAN. 927473, FRA. 71131128, ITL. 923947, JAP. 49-17379, U.K. 1338691.

Class 3F

3,749,927.—ELECTROSTATIC CHARGING PROCESS FOR ELECTROPHOTOSENSITIVE MATERIAL. JULY 31, 1973. AUS. 435008, BEL. 469413, FRA. 7123717, ITL. 934461, JAP. 49-16060, U.K. 1316047.
3,778,148.—APPARATUS AND METHOD FOR SELECTIVELY DISCHARGING THE PHOTOCONDUCTIVE SURFACE OF AN ELECTROSTATIC DRUM COPIER TO FACILITATE THE CLEANING THEREOF. DEC. 11, 1973.
3,778,623.—CHARGING METHOD OF ELECTROPHOTOGRAPHIC MATERIALS. DEC. 11, 1973. FRA. 7229549.
3,789,223.—CHARGING METHOD FOR RELATIVELY MOVABLE ELECTROPHOTOGRAPHIC MEANS AND CORONA MEANS. JAN. 29, 1974. AUS. 431512, BEL. 771143, FRA. 7129349, ITL. 935108, JAP. 49-17529, U.K. 1347100.
3,789,224.—PROCESS FOR CHARGING ELECTROPHOTOGRAPHIC MATERIALS. JAN. 29, 1974. AUS. 435928, BEL. 772465, CAN. 945834, FRA. 7132445, ITL. 938023, JAP. 49-23902, U.K. 1359181.

Class 4A

3,741,644.—ORIGINAL POSITION CONFIRMING MEANS FOR DUPLICATING APPARATUS. JUNE 26, 1973.

Class 4A1

3,771,082.—COPYING APPARATUS WITH AUXILIARY LIGHT SOURCE FOR ILLUMINATING AN ORIGINAL TO BE REPRODUCED. NOV. 6, 1973. U.K. 1350616.
3,841,752.—LIGHT SOURCE FOR COPYING MACHINE. OCT. 15, 1974.

Class 4A2

3,737,223.—PLATEN DRIVING DEVICE IN AN ELECTROPHOTOGRAPHIC COPYING MACHINE. JUNE 5, 1973. U.K. 1341619.

Class 4B

3,687,661.—COLOR ELECTROPHOTOGRAPHIC PROCESS. AUG. 29, 1972. ARG. 182081, BEL. 759454, CAN. 932785, FRA. 7043828, ITL. 909538, JAP. 49-18265, U.K. 1327486.
3,784,301.—ELECTROPHOTOGRAPHIC BORDER APPARATUS. JAN. 8, 1974. JAP. 49-26590.
3,785,812.—METHOD OF EXPOSURE IN MULTI-COLOR ELECTROPHOTOGRAPHY. JAN. 15, 1974. ARG. 185812, AUS. 417288, BEL. 759392, CAN. 945619, FRA. 7042329, ITL. 914549, JAP. 49-11573, U.K. 1326580.

Class 4B1

3,927,940.—MANUSCRIPT SCANNING DEVICE FOR COPYING MACHINES AND THE LIKE. DEC. 23, 1975.
3,955,048.—SCANNING METHOD AND APPARATUS. MAY 4, 1976.

Class 4B1A

3,778,153.—OPTICAL IMAGING SYSTEM. DEC. 11, 1973.
4,063,813.—METHOD OF EXPOSING A LIGHT SENSITIVE MEMBER. DEC. 20, 1977. JAP. 51-89646, U.K. 76-19272.

Class 4B7

3,313,883.—SYSTEMS FOR RECORDING CHARACTERS ON LIGHT SENSITIVE RECORDING SURFACES. AUG. 25, 1964. CAN. 693,055, FRA. 1,246,197, GER. 1,449,634, JAP. 318,009.

3,615,391.—ELECTROPHOTOGRAPHIC COLOR DEVELOPING METHOD. OCT. 26, 1971. AUS. 435735, CAN. 842157, FRA. 1572518, JAP. 46-21996, U.K. 1231846, U.K. 1257609.
3,656,947.—CODING OF ORIGINALS AND SENSITIVE PAPER IN A MULTI-COLOR ELECTROPHOTOGRAPHIC PROCESS. APR. 18, 1972. BEL. 748591, CAN. 902987, FRA. 7012518, JAP. 48-26778, U.K. 1309644.

Class 5A1A

3,451,376.—DEVELOPING DEVICE FOR ELECTROPHOTOGRAPHY. JUNE 24, 1969. AUS. 410555, FRA. 1556520, SWD. 319382, U.K. 1173377.

Class 5A2

3,418,972.—POWDER DUSTING DEVICE FOR ELECTROPHOTOGRAPHY. DEC. 31, 1968. FRA. 1544620, JAP. 45-8838, U.K. 1169410.

Class 5A3B

3,418,972.—POWDER DUSTING DEVICE FOR ELECTROPHOTOGRAPHY. DEC. 31, 1968. FRA. 1544620, JAP. 45-8838, U.K. 1169410.

Class 5A4

3,681,065.—DYE TRANSFER COLOR ELECTROPHOTOGRAPHY. AUG. 1, 1972. CAN. 884,227, JAP. 44-32208.

Class 5A5

3,620,800.—CLEANING LIQUID DEVELOPED ELECTROSTATIC IMAGES BY CONTACT WITH VAPORIZED CLEANING FLUID. NOV. 16, 1971. CAN. 915753, CAN. 933997, JAP. 48-13454.

Class 5C

3,927,641.—DEVELOPING MECHANISM USING MAGNETIC BRUSH. DEC. 23, 1975.
3,937,181.—MAGNETIC BRUSH TYPE DEVELOPING MECHANISM IN ELECTROPHOTOGRAPHIC COPYING MACHINE. FEB. 10, 1976.

Class 5C1

3,545,968.—DEVELOPING A LATENT ELECTROSTATIC IMAGE WITH FERROMAGNETIC CARRIER AND TONER BY EMPLOYING A VARYING MAGNETIC FIELD. DEC. 8, 1970. BEL. 710692, FRA. 1561470, U.K. 1205175.
3,908,595.—MAGNETIC BRUSH DEVELOPMENT APPARATUS UTILIZING MAGNETIC MEANS. SEPT. 30, 1975.
3,977,361.—MAGNETIC BRUSH DEVELOPMENT DEVICE. AUG. 31, 1976. GER. P2521275.3, JAP. 49-52302, KOR. 3670, TIW. 6410622, U.K. 19955-75.
3,981,271.—MAGNETIC BRUSH TYPE DEVELOPER FOR USE IN AN ELECTROPHOTOGRAPHIC MACHINE. SEPT. 21, 1976. GER. P25073910, JAP. 49-19615, U.K. 6841-75.
3,985,099.—MAGNETIC BRUSH DEVELOPING DEVICE. OCT. 12, 1976. GER. P2521291.3 JAP. 52303, KOR. 3669, TIW. 6410736, U.K. 19951-75.
4,048,958.—MAGNETIC BRUSH DEVELOPING DEVICE. SEPT. 20, 1977. KOR. 4052-74, TIW. 22,999, U.K. 9472/76, W. GER. P2611755.5.
4,194,465.—MAGNETIC BRUSH DEVELOPER DEVICE. MAR. 25, 1980.

Class 5C2

3,672,887.—ELECTROPHOTOGRAPHIC PROCESS FOR MULTICOLOR REPRODUCTION. JUNE 27, 1972. JAP. 47-19395.
3,764,309.—COLOR PRINTING METHOD. OCT. 9, 1973. BEL. 724581, CAN. 877884, FRA. 1595848, ITL. 848192, JAP. 46-33541, U.K. 1223020.

Class 5D1

3,783,818.—ELECTROPHOTOGRAPHIC DEVELOPING PROCESS. JAN. 8, 1974. BEL. 781515, FRA. 7211409, ITL. 950927, U.K. 1358450.

Class 5D2

3,336,904.—XEROGRAPHIC DEVELOPING APPARATUS. AUG. 22, 1967. BEL. 651786, GER. 1,472,946, HOL. 132649, JAP. 40-23755, U.K. 1068575.

Class 5D3

3,804,659.—ELECTROPHOTOGRAPHIC REVERSAL DEVELOPMENT PROCESS FOR ENHANCING THE QUALITY OF THE DEVELOPED IMAGE. APR. 16, 1974. FRA. 7144069, JAP. 49-26901.

Class 5E

3,540,885.—REDUCTION OF FOG FORMATION IN AN ELECTROPHOTOGRAPHIC LIGHT SENSITIVE SHEET. NOV. 17, 1970. BEL. 693302, FRA. 1509571, JAP. 44-2551, U.K. 1176001.
3,560,203.—ELECTROPHOTOGRAPHIC DEVELOPING PROCESS. FEB. 2, 1971. FRA. 1604137, U.K. 1165038.
3,566,834.—ELECTROPHOTOGRAPHIC DEVELOPING DEVICE. MAR. 2, 1971. AUS. 417201, BEL. 718329, FRA. 1578391, JAP. 48-31853, U.K. 1194789.
3,622,515.—ELECTROPHOTOGRAPHIC LIQUID DEVELOPER HAVING A PROTEOLYTIC ENZYME. NOV. 23, 1971. AUS. 436813, BEL. 732273, CAN. 896948, FRA. 2007.520, ITL. 867188, JAP. 47-17879, U.K. 1231544.
3,627,557.—LIQUID DEVELOPMENT BY REDUCING THE VISCOSITY OF THE DEVELOPER ON A ROLLER APPLICATION PRIOR TO DEVELOPMENT. DEC. 14, 1971. CAN. 905230, U.K. 1303499.
3,628,981.—LIQUID TONER DEVELOPMENT. DEC. 21, 1971. BEL. 751669, CAN. 902982, FRA. 7021033, ITL. 893939, JAP. 48-18859, U.K. 1284477.
3,642,515.—LIQUID DEVELOPMENT UTILIZING A CURVILINEAR DEVELOPMENT ELECTRODE. FEB. 15, 1972. CAN. 867698.
3,668,126.—METHOD OF PRODUCING ELECTROPHOTOGRAPHIC LIQUID DEVELOPERS HAVING VERY FINE COLORING MATERIAL. JUNE 6, 1972. BEL. 709625, FRA. 1562934, U.K. 1218064.
3,671,290.—IMAGING SYSTEM. JUNE 20, 1972. CAN. 917486, JAP. 48-8134, U.K. 1278858.
3,685,907.—ELECTROPHOTOGRAPHIC PROCESS. AUG. 22, 1972. ARG. 181932, AUS. 442703, BEL. 752387, CAN. 910132, FRA. 2-51297, ITL. 902170, MEX. 116451, U.K. 1292200.
3,692,523.—PROCESS FOR DEVELOPING ELECTROSTATIC LATENT IMAGE AND LIQUID DEVELOPER USED THEREFOR. SEPT. 19, 1972. AUS. 437065, BEL. 745533, CAN. 924.167, FRA. 7040233, GER. 20052680, ITL. 888.449, JAP. 48-7821, U.K. 1255445.
3,703,400.—DEVELOPING METHOD FOR ELECTROPHOTOGRAPHY. NOV. 21, 1972. AUS. 435816, BEL. 748.590, CAN. 898073, FRA. 7012445, GER. 2016586, ITL. 903950, U.K. 1251623.
3,705,032.—ELECTROPHOTOGRAPHIC MATERIALS. DEC. 5, 1972. AUS. 432027, BEL. 737701, CAN. 918984, FRA. 6928605, GER. 1942383, ITL. 872749, JAP. 48-2966, U.K. 1237036.
3,705,767.—ELECTROPHOTOGRAPHIC DEVICE. DEC. 12, 1972. BEL. 753687, CAN. 947357, FRA. 7026800, GER. 2036140, ITL. 902477, JAP. 48-11054, U.K. 1266112.
3,707,139.—LIQUID TYPE ELECTROPHOTOGRAPHY DEVELOPING APPARATUS. DEC. 26, 1972. BEL. 756409, CAN. 918413, FRA. 7034577, GER. 1314865.
3,713,422.—APPARATUS FOR DEVELOPING AN ELECTROSTATIC LATENT IMAGE BY LIQUID DEVELOPMENT. JAN. 30, 1973. BEL. 764267, CAN. 932954, FRA. 7109086, GER. 763,992, U.K. 1341631.
3,716,360.—MOLTEN IMAGE TRANSFER IN ELECTROPHOTOGRAPHY. FEB. 13, 1973. BEL. 763191, FRA. 7105717, GER. 2108080, ITL. 919905, U.K. 1313059.
3,717,461.—REMOVAL OF PROTECTIVE RESIN LAYER BY LIQUID DEVELOPER IN ELECTROPHOTOGRAPHIC IMAGING. FEB. 20, 1973. ARG. 182091, AUS. 428797, BEL. 762808, CAN. 929016, FRA. 2078511, ITL. 919801, MEX. 120941, U.K. 1326300.
3,718,593.—PROCESS FOR THE PRODUCTION OF AN ELECTROPHOTOGRAPHIC LIQUID DEVELOPER CONTAINING GELATIN. FEB. 27, 1973. AUS. 438586, BEL. 745535, CAN. 924166, FRA. 7004034, ITL. 888743, JAP. 48-7822, U.K. 1255763.
3,738,832.—COLOR ELECTROPHOTOGRAPHIC PROCESS EMPLOYING LIQUID DEVELOPER CONTAINING GELATIN. JUNE 12, 1973. CAN. 921746, JAP. 47-30858, U.K. 1277723.
3,749,059.—APPARATUS FOR DEVELOPING ELECTROSTATIC LATENT IMAGE. JULY 31, 1973. AUS. 445683, BEL. 755061, CAN. 903579, FRA. 7029636, JAP. 48-25936, U.K. 1267888.
3,750,624.—APPARATUS FOR DEVELOPING ELECTROPHOTOGRAPHIC CONTINUOUS WEB MATERIAL. AUG. 7, 1973. AUS. 433381, BEL. 770250, CAN. 948843, FRA. 7126524, ITL. 948843, U.K. 1328313.
3,753,419.—ELECTROPHOTOGRAPHIC LIQUID DEVELOPING APPARATUS. AUG. 21, 1973. AUS. 430772,

BEL. 768788, CAN. 334540, FRA. 7122426, ITL. 928531, U.K. 1337485.
3,766,887.—DEVELOPING DEVICE FOR ELECTROSTATIC LATENT IMAGE. OCT. 28, 1973. AUS. 429869, BEL. 761227, CAN. 102437, FRA. 2075270, ITL. 919235, U.K. 1310092.
3,774,574.—DEVELOPMENT DEVICE FOR ELECTROPHOTOGRAPHY. NOV. 27, 1973. FRA. 7143873.
3,783,827.—LIQUID DEVELOPMENT APPARATUS FOR ELECTROPHOTOGRAPHY. JAN. 8, 1974. BEL. 777528, CAN. 949309, FRA. 7147339, ITL. 945720.
3,784,397.—IMAGING SYSTEM. JAN. 8, 1974. ARG. 185194, JAP. 1348667, MEX. 120938.
3,788,930.—METHOD OF FIXING IMAGES OBTAINED BY LIQUID DEVELOPMENT IN ELECTROPHOTOGRAPHY. JAN. 29, 1974. BEL. 774763.
3,796,187.—APPARATUS FOR DEVELOPING CONTINUOUS ELECTROPHOTOGRAPHIC PHOTOSENSITIVE WEB MATERIAL. MAR. 12, 1974. BEL. 769412, CAN. 934541, FRA. 7123852, ITL. 934462, U.K. 1332534.
3,804,659.—ELECTROPHOTOGRAPHIC REVERSAL DEVELOPMENT PROCESS FOR ENHANCING THE QUALITY OF THE DEVELOPED IMAGE. APR. 16, 1974. FRA. 7144069, JAP. 49-26901.
3,817,212.—ELECTROSTATOGRAPHIC LIQUID DEVELOPMENT APPARATUS. JUNE 18, 1974. U.K. 1310448.
3,836,384.—IMAGING SYSTEMS. SEPT. 17, 1974. JAP. 46-43198.
3,991,711.—ELECTROSTATIC DUPLICATING METHOD AND APPARATUS UTILIZING WET DEVELOPING. NOV. 16, 1976. FRA. 733636, GER. 2350429, JAP. 47-101120, U.K. 1,443,209.
4,029,826.—ELECTROSTATIC PRINTING METHOD. JUNE 14, 1977. FRA. 7434[illegible], GER. P2448211.9, JAP. 48-112875, U.K. 43016-74.

Class 5E4

3,577,259.—LIQUID DEVELOPMENT OF ELECTROSTATIC LATENT IMAGES UTILIZING A TOWER-FREE ZONE. MAY 4, 1971. AUS. 418640, CAN. 871081, FRA. 1592038, JAP. 46-11633, U.K. 1232917.
3,592,678.—LIQUID DONOR DEVELOPMENT WITH ELECTROPHORETIC CLEANING. JULY 13, 1971. CAN. 939733, JAP. 48-34774, U.K. 1261752.
3,597,368.—LIQUID DEVELOPER FOR ELECTROPHOTOGRAPHY CONTAINING YELLOW PIGMENT. AUG. 3, 1971. BEL. 719289, CAN. 846.122, FRA. 1578390, JAP. 46-10480, U.K. 1201134.

Class 5I1

3,537,427.—ELECTROSTATIC LATENT IMAGE DEVELOPING DEVICE. NOV. 3, 1930. BEL. 722040, JAP. 46-14440, U.K. 1239635.
3,607,342.—METHOD OF DEVELOPMENT OF ELECTROSTATIC IMAGES. SEPT. 21, 1971. BEL. 707253, FRA. 1555753, JAP. 44-9878, U.K. 1204548.
3,627,557.—LIQUID DEVELOPMENT BY REDUCING THE VISCOSITY OF THE DEVELOPER ON A ROLLER APPLICATION PRIOR TO DEVELOPMENT. DEC. 14, 1971. CAN. 905230, U.K. 1303499.

Class 5J

3,713,422.—APPARATUS FOR DEVELOPING AN ELECTROSTATIC LATENT IMAGE BY LIQUID DEVELOPMENT. JAN. 30, 1973. BEL. 764267, CAN. 932954, FRA. 7109086, GER. 763,992, U.K. 1341631.
3,750,624.—APPARATUS FOR DEVELOPING ELECTROPHOTOGRAPHIC CONTINUOUS WEB MATERIAL. AUG. 7, 1973. AUS. 433381, BEL. 770250, CAN. 948843, FRA. 7126524, ITL. 937783, U.K. 1328313.

Class 5J1

3,620,798.—DEVELOPMENT OF LATENT ELECTROSTATIC IMAGE EMPLOYING NOVEM DEVELOPMENT ELECTRODE. NOV. 16, 1971. BEL. 709410, FRA. 1552425, U.K. 1186841.
3,642,515.—LIQUID DEVELOPMENT UTILIZING A CURVILINEAR DEVELOPMENT ELECTRODE. FEB. 15, 1972. CAN. 867698.
3,655,419.—ELECTROPHOTOGRAPHIC REVERSAL DEVELOPING PROCESS. APR. 11, 1972. AUS. 432643, BEL. 741.440, CAN. 914.518, FRA. 6938659, ITL. 880.593, U.K. 1287.903.
3,685,907.—ELECTROPHOTOGRAPHIC PROCESS. AUG. 22, 1972. AUS. 442703, BEL. 752387, CAN. 910132, FRA. 2-51297, ITL. 902170, U.K. 1292200.
3,783,827.—LIQUID DEVELOPMENT APPARATUS FOR ELECTROPHOTOGRAPHY. JAN. 8, 1974. BEL. 777528, CAN. 949309, FRA. 7147339, ITL. 945720.

3,836,384.—IMAGING SYSTEMS. SEPT. 17, 1974. JAP. 46-43198.

Class 5J2

3,774,574.—DEVELOPMENT DEVICE FOR ELECTROPHOTOGRAPHY. NOV. 27, 1973. FRA. 7143873.
3,784,397.—IMAGING SYSTEM. JAN. 8, 1974. ARG. 185194, MEX. 120938, U.K. 1348667.

Class 5J3

3,566,834.—ELECTROPHOTOGRAPHIC DEVELOPING DEVICE. MAR. 2, 1971. AUS. 417201, BEL. 718329, FRA. 1578391, JAP. 48-31853, U.K. 1194789.
3,672,330.—APPARATUS FOR DEVELOPING A LATENT ELECTROSTATIC IMAGE. JUNE 27, 1972. BEL. 708760, FRA. 149128, U.K. 1192600.

Class 5J5

3,560,203.—ELECTROPHOTOGRAPHIC DEVELOPING PROCESS. FEB. 2, 1971. FRA. 1604137, U.K. 1165038.
3,783,818.—ELECTROPHOTOGRAPHIC DEVELOPING PROCESS. JAN. 8, 1974. BEL. 781515, FRA. 7211409, ITL. 950927, U.K. 1358450.
3,784,397.—IMAGING SYSTEM. JAN. 8, 1974. ARG. 185194, MEX. 120938, U.K. 1348667.
3,981,268.—DEVICE FOR CONTROLLING ELECTRIC POTENTIAL APPLIED TO DEVELOPING ELECTRODE IN AN ELECTROPHOTOGRAPHIC DUPLICATOR. SEPT. 21, 1976. GER. P2526802.4, JAP. 49-47554, KOR. 3672, TIW. 6410621, U.K. 24745-75.

Class 5K

3,724,941.—ELECTROPHOTOGRAPHIC APPARATUS. APR. 3, 1973.
3,762,811.—METHOD AND APPARATUS FOR ELECTROPHOTOGRAPHY. OCT. 2, 1973.

Class 5M

3,620,798.—DEVELOPMENT OF LATENT ELECTROSTATIC IMAGE EMPLOYING NOVEM DEVELOPMENT ELECTRODE. NOV. 16, 1971. BEL. 709410, FRA. 1552425, U.K. 1186841.
3,655,419.—ELECTROPHOTOGRAPHIC REVERSAL DEVELOPING PROCESS. APR. 11, 1972. AUS. 432643, BEL. 471.440, CAN. 914.518, FRA. 6938659, ITL. 880.593, U.K. 1287.903.
3,773,507.—ELECTROPHOTOGRAPHIC REVERSAL DEVELOPMENT PROCESS EMPLOYING A PRE-TONER. NOV. 20, 1973. AUS. 426720, BEL. 769893, CAN. 947812, FRA. 7124853, ITL. 934605, JAP. 49-5465, U.K. 1340947.

Class 5N

3,764,312.—ELECTROPHOTOGRAPHIC PROCESS. OCT. 9, 1973. FRA. 7146405, JAP. 49-26903.

Class 5N2

4,246,332.—ELECTROPHOTOGRAPHIC TONER COMPRISING LOW AND HIGH MOLECULAR WEIGHT BLEND OF BINDER RESINS. JAN. 20, 1981.

Class 5N2B

4,020,192.—XEROGRAPHIC REPRODUCTION PROCESS AND TONER CARRIER FOR USE THEREIN. APR. 26, 1977. FRA. 7430644, GER. P2443013.1, JAP. 48-101085, U.K. 39509.

Class 5N5

3,941,898.—DEVELOPING METHOD UTILIZING PULVERIZED, COLORED, CROSSLINKED, VINYLIC POLYMER RESIN AS TONER. MAR. 2, 1976.
4,245,022.—DRY ELECTROPHOTOGRAPHIC DEVELOPERS. JAN. 13, 1981.

Class 5N66

4,217,406.—CROSS-LINKING REACTION DURING MELT KNEADING PRODUCES RESINOUS ELECTROPHOTOGRAPHIC TONER. AUG. 12, 1980.

Class 5O

3,476,659.—ELECTROPHOTOGRAPHIC IMAGING AND COPYING PROCESS. NOV. 4, 1969. BEL. 684406, FRA. 1489929, ITL. 773333, JAP. 43-27579, U.K. 1159394.
3,565,613.—ELECTROLYTIC ELECTROPHOTOGRAPHY. FEB. 23, 1971. GER. 1597849, JAP. 44-13679, U.K. 1202409.

Class 5P

4,127,083.—DEVELOPER SEALING DEVICE FOR XEROGRAPHIC COPYING MACHINE. NOV. 28, 1978.

Class 6BI

3,791,643.—CHAIN DELIVERY PAPER FEEDING DEVICE. FEB. 12, 1974. JAP. 48-20232.
3,927,877.—PAPER FEED TRAY FOR USE WITH COPYING MACHINE AND THE LIKE. DEC. 23, 1975.

Class 6C

3,901,427.—COPY PAPER FEEDER. AUG. 26, 1975.

Class 6D

3,924,848.—PAPER FEED APPARATUS FOR GRIPPER-TYPE PAPER TRANSPORT DEVICE. DEC. 9, 1975.
3,924,849.—PAPER GRIPPING DEVICE FOR USE WITH A CHAIN DRIVEN PAPER CARRIAGE. DEC. 9, 1975.

Class 6H

3,704,881.—TRANSFER SHEET PEELING DEVICE FOR XEROGRAPHIC APPARATUS. DEC. 5, 1972. CAN. 940546, U.K. 1275888.

Class 7C

3,764,207.—ELECTROPHOTOGRAPHIC PROCESS UTILIZING SINGLE CHARGING MEANS FOR EFFECTING SIMULTANEOUS FUNCTIONS OF CHARGING AND FACILITATING TONER IMAGE TRANSFER. OCT. 9, 1973.

Class 7E1

3,716,360.—MOLTEN IMAGE TRANSFER IN ELECTROPHOTOGRAPHY. FEB. 13, 1973. BEL. 763191, FRA. 7105717, GER. 2108080, ITL. 919905, U.K. 1313059.

Class 7E3A

3,549,359.—COLOR ELECTROPHOTOGRAPHY EMPLOYING DYE TRANSFER FROM A DYE-CONTAINING PHOTOSENSITIVE LAYER TO AN IMAGE RECEIVING SHEET. DEC. 22, 1970. FRA. 1524473, GER. 1,572,341, JAP. 45-40159, U.K. 1,183,532.
3,654,865.—METHOD FOR FORMING DYE IMAGE USING AN ELECTROPHOTOGRAPHIC DEVELOPER CONTAINING A GELATIN TONER. APR. 11, 1972. AUS. 435812, BEL. 745534, CAN. 924.951, FRA. 7004034, ITL. 888.447, JAP. 48-9017, U.K. 1257296.

Class 8A

3,825,407.—HEATER HOLDING BRACKET FOR A HEAT FIXER IN A COPYING MACHINE OR THE LIKE. JULY 23, 1974.

Class 8AB

3,806,314.—FIXING APPARATUS FOR THERMOPLASTIC RECORDING. APR. 23, 1974.

Class 8A1B

3,818,185.—HEAT FUSION-BONDING APPARATUS FOR ELECTROPHOTOGRAPHY. JUNE 18, 1974.
3,916,256.—PROTECTIVE CIRCUIT IN A TEMPERATURE REGULATOR FOR THE THERMAL FIXING DEVICE OF A DUPLICATOR. NOV. 4, 1975.

Class 8A2

3,904,786.—PROCESS FOR FIXING IMAGES BY CONTACT HEATING IN A DUPLICATOR. SEPT. 9, 1975.
3,981,269.—FIXING DEVICE FOR ELECTROPHOTOGRAPHIC DUPLICATING MACHINES. SEPT. 21, 1976. GER. P2507365.8, JAP. 31159, KOR. 3389, U.K. 5395-75.

Class 8A2A

3,788,930.—METHOD OF FIXING IMAGES OBTAINED BY LIQUID DEVELOPMENT IN ELECTROPHOTOGRAPHY. JAN. 29, 1974. BEL. 774763.

Class 8B

3,647,773.—SUSPENSION POLYMERIZATION IN THE PRESENCE OF A METHYL STYRENE. MAR. 7, 1972. BEL. 727179, FRA. 2000527, JAP. 47-909, U.K. 1251434.

Class 8C

3,385,699.—PROCESS FOR PROCESSING ELECTROPHOTOSENSITIVE LAYERS. MAY 28, 1968. BEL. 651039, FRA. 1402385, HOL. 130806, SWD. 310458, U.K. 1072476.
3,740,249.—SOLVENT FIXING PROCESS. JUNE 19, 1973. JAP. 49-26591.

Class 9A

3,488,896.—PROCESS OF PUMICING A SURFACE. JAN. 13, 1970. FRA. 1,474,687, ITL. 782,665, JAP. 44-12197, U.K. 1,143,923.
3,936,183.—ELECTROPHOTOGRAPHIC COPYING MACHINE WITH IMPROVED CLEANING BLADE. FEB. 3, 1976.

Class 9A1

3,766,592.—DRUM CLEANING DEVICE FOR AN ELECTROPHOTOGRAPHIC DUPLICATOR. OCT. 23, 1973.

Class 9B3

3,671,290.—IMAGING SYSTEM. JUNE 20, 1972. CAN. 917486, JAP. 48-8134, U.K. 1278858.
3,703,400.—DEVELOPING METHOD FOR ELECTROPHOTOGRAPHY. NOV. 21, 1972. AUS. 435816, BEL. 748.590, CAN. 898073, FRA. 7012445, GER. 2016586, ITL. 903950, U.K. 1251623.

Class 10A, 10E

3,922,662.—DETECTOR FOR USE WITH A DUPLICATOR OR THE LIKE FOR DETECTING INCORRECTLY ALIGNED DOCUMENTS. NOV. 25, 1975.

Class 14A5

3,937,883.—BRAKING CIRCUIT FOR USE WITH PHASE SYNCHRONIZINO CIRCUITRY. FEB. 10, 1976.

Class 15

3,795,187.—IMPELLERS FOR IMPACT PRINTERS. MAR. 5, 1974.

Class 15C

4,058,800.—IMAGE PICKUP ELEMENT AND SYSTEM UTILIZING MAGNETIC BUBBLES. NOV. 15, 1977. JAP. P49-137738.
4,054,866.—CONVERSION ELEMENT AND SYSTEM UTILIZING MAGNETIC BUBBLES. OCT. 18, 1977. JAP. P50-077558.
4,151,599.1.—MAGNETIC BUBBLE DISPLAY UNITS. APR. 24, 1979.

Class 16C

4,227,452.—PRINTING MACHINE. OCT. 14, 1980.

Class 17B1

3,687,538.—APPARATUS FOR EXPOSING LATENT IMAGE MARGINS IN ELECTROPHOTOGRAPHIC COPYING APPARATUS. AUG. 29, 1972. CAN. 931204, U.K. 1350795.

Class 17D3

3,936,664.—METHOD AND APPARATUS FOR GENERATING CHARACTER PATTERNS. FEB. 3, 1976.

Class 17E1

4,271,435.—SCANNING TYPE READOUT DEVICE. JUNE 2, 1981.
4,224,510.—ORIGINAL DOCUMENT READING APPARATUS. SEPT. 23, 1980.

4,288,702.—IMAGE PICKUP DEVICE HAVING ELECTRODE MATRIX COUPLING. SEPT. 8, 1981.

Class 18A

3,417,733.—APPARATUS FOR VACUUM COATING. DEC. 24, 1968. FRA. 1,415,251, GER. 1,521,238. JAP. 40-26402, U.K. 1,081,324.
3,730,711.—PHOTOCONDUCTIVE MATERIAL FOR ELECTROPHOTOGRAPHY. MAY 1, 1973. BEL. 754699, CAN. 925087, FRA. 754699, GER. 2040152, JAP. 48-32381, U.K. 1272720.
3,799,340.—REFINING PHOTOCONDUCTIVE PARTICLE. MAR. 26, 1974. BEL. 776110, CAN. 944204, FRA. 714325.

Class 18A1

3,589,928.—PROCESS FOR THE PRODUCTION OF A LIGHT SENSITIVE MATERIAL FOR ELECTROPHOTOGRAPHY. JUNE 29, 1971. BEL. 685072, FRA. 1500187, GER. 1,522,603, JAP. 44-23775, U.K. 1139532.
3,607,363.—PROCESS FOR PRODUCING PHOTOCONDUCTIVE MATERIAL. SEPT. 21, 1971. U.K. 1210071.
3,625,747.—PHOTOCONDUCTIVE POWDERS AND A METHOD FOR PRODUCING THE SAME. DEC. 7, 1971.
3,634,333.—PROCESS FOR COATING ZINC OXIDE POWDER WITH CADMIUM SULFIDE. JAN. 11, 1972. BEL. 731056, CAN. 882.627, FRA. 2.005.849, GER. 1916761, JAP. 47-49616, U.K. 1215685.
3,682,825.—PROCESS FOR THE PRODUCTION OF ELECTROPHOTOGRAPHIC LIQUID DEVELOPER CONTAINING GELATIN. AUG. 8, 1972. AUS. 424258, BEL. 745390, CAN. 924165, FRA. 7003324, GER. 2004817, ITL. 887410, JAP. 48-7819, U.K. 1255762.
3,729,419.—LIQUID DEVELOPER. APR. 24, 1973. AUS. 451254, FRA. 71.09434, JAP. 48-43157, U.K. 1341627.
3,743,537.—METHOD OF MAKING ELECTROPHOTOGRAPHIC RECORDING MEMBER. JULY 3, 1973. AUS. 430736, ATR. 305766, BEL. 757.393, CAN. 928165, FRA. 7037234, ITL. 917004, JAP. 49-3846, U.K. 1269306.
3,755,177.—PROCESS OF MAKING LIQUID ELECTROSTATIC DEVELOPERS CONTAINING GELATIN. AUG. 28, 1973. AUS. 443292, CAN. 925743, JAP. 48-7820, U.K. 1284646.
3,803,011.—PROCESS FOR PREPARING 2, 3-DIHYDRO-1H,6H-1,5-BENZODIAZOCINE-2-ONE DERIVATIVE. APR. 9, 1974.

Class 18A2

3,761,261.—PHTHALOCYANINE DYE SENSITIZERS FOR ZINC OXIDE. SEPT. 25, 1973.

Class 18A3

3,806,314.—FIXING APPARATUS FOR THERMOPLASTIC RECORDING. APR. 23, 1974.
3,661,572.—MANUFACTURING PROCESS FOR MANUFACTURING ELECTROPHOTOGRAPHIC SENSITIVE MATERIAL. MAY 9, 1972. AUS. 429948, BEL. 754323, CAN. 754323, FRA. 7028557, GER. 2038762, ITL. 902691, U.K. 1305298.

Class 18B

3,548,035.—SUSPENSION POLYMERIZATION PROCESS. DEC. 15, 1970. FRA. 1559138, GER. 1720782, JAP. 45-40052, U.K. 1185775.
3,625,747.—PHOTOCONDUCTIVE POWDERS AND A METHOD FOR PRODUCING THE SAME. DEC. 7, 1971.
3,647,773.—SUSPENSION POLYMERIZATION IN THE PRESENCE OF METHYL STYRENE. MAR. 7, 1972. BEL. 727179, FRA. 2000527, JAP. 47-909, U.K. 1251434.
3,668,126.—METHOD OF PRODUCING ELECTROPHOTOGRAPHIC LIQUID DEVELOPERS HAVING VERY FINE COLORING MATERIAL. JUNE 6, 1972. BEL. 709625, FRA. 1562934, U.K. 1218064.
3,697,266.—ORGANIC PHOTOCONDUCTIVE MATERIALS FOR ELECTROPHOTOGRAPHY. OCT. 10, 1972. BEL. 761043, CAN. 915493, FRA. 2074451, ITL. 913992, JAP. 48-38429, U.K. 1323109.
3,716,505.—PROCESS FOR SUSPENSION POLYMERIZATION. FEB. 13, 1973. FRA. 2048682, GER. 2025104, JAP. 47-23406, U.K. 1316693.

Class 18C

3,622,515.—ELECTROPHOTOGRAPHIC LIQUID DEVELOPER HAVING A PROTEOLYTIC ENZYME. NOV. 23, 1971. AUS. 436813, BEL. 732273, CAN. 896948, FRA. 2007.520, ITL. 867188, JAP. 47-17879, U.K. 1231544.
3,718,593.—PROCESS FOR THE PRODUCTION OF AN ELECTROPHOTOGRAPHIC LIQUID DEVELOPER CONTAINING GELATIN. FEB. 27, 1973. AUS. 438586, BEL. 745535, CAN. 924166, FRA. 7004034, ITL. 888743, JAP. 48-7822, U.K. 1255763.
3,740,249.—SOLVENT FIXING PROCESS. JUNE 19, 1973. JAP. 49-26591.

Class 18C2A1

3,704,119.—ELECTROPHOTOGRAPHIC PROCESS USING TONER OF SAME REFRACTIVE INDEX AS ORGANIC PHOTOCONDUCTIVE LAYER. NOV. 28, 1972. AUS. 433360, BEL. 754544, FRA. 7028556, ITL. 902771, JAP. 48-21054, U.K. 1321065.

Class 18C2A2

3,668,126.—METHOD OF PRODUCING ELECTROPHOTOGRAPHIC LIQUID DEVELOPERS HAVING VERY FINE COLORING MATERIAL. JUNE 6, 1972. BEL. 709625, FRA. 1562934, U.K. 1218064.
3,682,825.—PROCESS FOR THE PRODUCTION OF ELECTROPHOTOGRAPHIC LIQUID DEVELOPER CONTAINING GELATIN. AUG. 8, 1972. AUS. 424258, BEL. 745390, CAN. 924165, FRA. 7003324, GER. 2004817, ITL. 887410, JAP. 48-7819, U.K. 1255762.

Class 18C5A

3,597,368.—LIQUID DEVELOPER FOR ELECTROPHOTOGRAPHY CONTAINING YELLOW PIGMENT. AUG. 3, 1971. BEL. 719289, CAN. 846.122, FRA. 1578390, JAP. 46-10480, U.K. 1201134.
3,738,832.—COLOR ELECTROPHOTOGRAPHIC PROCESS EMPLOYING LIQUID DEVELOPER CONTAINING GELATIN. JUNE 12, 1973. CAN. 921746, JAP. 47-30858, U.K. 1277723.

Class 20A3

3,753,419.—ELECTROPHOTOGRAPHIC LIQUID DEVELOPING APPARATUS. AUG. 21, 1973. AUS. 430722, BEL. 768788, CAN. 334540, FRA. 7122426, ITL. 928531, U.K. 1337485.
3,817,212.—ELECTROSTATOGRAPHIC LIQUID DEVELOPMENT APPARATUS. JUNE 18, 1974. U.K. 1310448.

Class 20B3

3,544,458.—METHOD OF FILTERING. DEC. 1, 1970. BEL. 732578, CAN. 888335.

Class 20C

3,707,139.—LIQUID TYPE ELECTROPHOTOGRAPHY DEVELOPING APPARATUS. DEC. 26, 1972. BEL. 756409, CAN. 918413, FRA. 7034577, GER. 1314865.

Class 20C2

3,753,466.—AUTOMATIC FIRE EXTINGUISHER IN ELECTROPHOTOGRAPHIC COPYING MACHINE OR THE LIKE. AUG. 21, 1973. U.K. 1334579.

Class 20C4

3,704,881.—TRANSFER SHEET PEELING DEVICE FOR XEROGRAPHIC APPARATUS. DEC. 5, 1972. CAN. 940546, U.K. 1275888.

Class 20D

3,653,292.—AUTOMATIC CONTOUR TRACING DEVICE. APR. 4, 1972. FRA. 7204547, GER. 2033094, U.K. 1295128.
3,825,407.—HEATER HOLDING BRACKET FOR A HEAT FIXER IN A COPYING MACHINE OR THE LIKE. JULY 23, 1974.

Class 20D1

3,791,643.—CHAIN DELIVERY PAPER FEEDING DEVICE. FEB. 12, 1974. JAP. 48-20232.

Class 20G

3,795,187.—IMPELLERS FOR IMPACT PRINTERS. MAR. 5, 1974.

Class 20I

3,341,664.—METAL DRAWING APPARATUS. APR. 24, 1974.

Class 24A1

4,212,017.—DEFLECTION ELECTRODE ASSEMBLY FOR MULTI-NOZZLE INK JET PRINTERS. JULY 8, 1980.

Class 25A4

3,952,167.—ELECTROMAGNETIC COUPLER FOR USE WITH A TELEPHONE SET. APR. 20, 1976.

Class 25C2

3,341,631.—CIRCUIT INTERRUPTER. APR. 24, 1974. BEL. 764267, CAN. 932954, FRA. 7109086.
3,846,647.—TRIGGER CIRCUIT FOR USE WITH MULTI-VIBRATORS. NOV. 5, 1974.

Class 25C4

3,838,344.—FREQUENCY MULTIPLYING CIRCUIT. SEPT. 24, 1974.

Class 25C5

3,936,675.—REFERENCE POINT POTENTIAL COMPENSATING CIRCUIT FOR USE WITH PHASE CONTROLLER. FEB. 3, 1976.

Class 27D

3,779,206.—APPARATUS FOR SCRAPING LIQUID OFF OF SHEET MATERIAL. DEC. 18, 1973.

Class 32

3,813,262.—RESIN-IMPREGNATED TISSUE OVERLAYS. MAY 28, 1974. BEL. 777312, FRA. 7146406, ITL. 945655.

Class 32B

3,273,450.—DATA PROCESSING APPARATUS. NOV. 15, 1963. FRA. 1384061, GER. 1449563, GRB. 1048048, JAP. 629392.

Xerox Patents

Class 1

4,043,549.—IMPACT FEEDER. AUG. 23, 1977
4,060,105.—TONER LOADING APPARATUS WITH REPLENISHING SUPPLY CONTAINER. NOV. 29, 1977
4,109,903.—FLUIDIC FEEDING OF DOCUMENTS TO AN EXPOSURE STATION. AUG. 29, 1978

Class 1A

3,877,936.—PHOTOCONDUCTIVE COPOLYMER OF N-VINYLCARBAZOLE AND N-VINYLPHTHALIMIDE. APR. 15, 1975. BEL. 0812436, FRA. 7409307, GRB. 1444048, ITL. 1010697, SPN. 0424411.
3,954,951.—PREPARATION OF RED AMORPHOUS SELENIUM. MAY 4, 1976.
3,961,954.—ACID SENSITIZED CHARGE TRANSFER COMPLEXES AND CYCLIC ELECTRSTATOGRAPHC IMAGNG METH-ACID SENSITIZATN. JUNE 8, 1976. CAN. 1002366.
4,009,249.—PREPARATION OF RED AMORPHOUS SELENIUM. FEB. 22, 1977.
4,072,522.—METHOD OF TREATING PHOTOCONDUCTIVE ZINC OXIDE. FEB. 7, 1978.
4,078,924.—IMAGING SURFACE SMOOTHING WITH ROUGHENED FOIL NICKEL. MAR. 14, 1978.
4,099,969.—COATING METHOD TO IMPROVE ADHESION OF PHOTOCONDUCTORS. JULY 11, 1978.
4,265,990.—IMAGING SYSTEM WITH A DIAMINE CHARGE TRANSPORT MATERIAL IN A POLYCARBONATE RESIN. MAY 5,1981. CAN. 1104866, GRB. 1577237.

Class 1A 1

3,607,261.—INORGANIC CRYSTALLINE BINDERS FOR ELECTROPHOTOGRAPHIC PLATES. SEPT. 21, 1971.
3,850,631.—PHOTOCONDUCTIVE ELEMENT WITH A POLYVINVLIDENE FLUORIDE BINDER. NOV. 26, 1974.
3,928,036.—FLEXIBLE XEROGRAPHIC PHOTORECEPTOR ELEMENT. DEC. 23, 1975.
3,981,728.—XEROGRAPHIC IMAGING MEMBER HAVING HEXAGONAL SELENIUM IN INTERLOCKING CONTINUOUS PATHS. SEPT. 21, 1971.
4,233,384.—IMAGING SYSTEM USING NOVEL CHARGE TRANSPORT LAYER. NOV. 11, 1980.

Class 1A 1A

3,174,855.—METHOD FOR A PRODUCTION OF A XEROGRAPHIC PLATE. MAR. 23, 1965.
3,251,686.—XEROGRAPHIC PROCESS. MAY 17, 1966. FRA. 1292831, GER. 1243979, GRB. 0996972, JAP. 0416023.
3,312,547.—XEROGRAPHIC PLATE AND PROCESSES OF MAKING AND USING SAME. APR. 4, 1967.
3,341,326.—DARK DECAY CONTROLLED XEROGRAPHY. SEPT. 12, 1967. AUS. 0285843, CAN. 0729829, FRA. 1377592, GRB. 1029199, ITL. 0706101.
3,352,669.—PHOTOCONDUCTIVE MEMBER AND PROCESSES OF PREPARING AND USING SAME. NOV. 14, 1967. AUS. 0405164, CAN. 0834670, FRA. 1422625, GER. 1497194, GRB. 1052970, HOL. 0137891, ITL. 0749420, JAP. 0501912.
3,508,918.—XEROGRAPHIC PLATE CONTAINING ALUMINUM SELENIDE BARRIER LAYER. APR. 28, 1970. CAN. 0872175.
3,532,496.—XRGRPHC PLTS AND PROCS EMPLYNG HMGNUS DISPRSNS OF VTREOUS SLNIUM AND SNSTZNG DYES AS PHTCNDCTV LAYER. OCT. 6, 1970.
3,621,248.—METHOD USING XERORADIOGRAPHIC PLATE INSENSITIVE TO VISIBLE LIGHT. NOV. 16, 1971.
3,645,729.—METHOD OF TRANSFERRING ELECTROSTATIC LATENT IMAGES USING MULTIPLE PHOTOCONDUCTIVE LAYERS. FEB. 29, 1972.
3,690,252.—LITHOGRAPHIC INKING APPARATUS. SEPT. 12, 1972. CAN. 0919006.
3,930,853.—ACCELERATING AGING METHOD FOR SELENIUM ARSENIC PHOTOCONDUCTORS. JAN. 6, 1976.
4,013,463.—PHOTORECEPTOR FABRICATION UTILIZING AC ION PLATING. MAR. 22, 1977.
4,150,029.—SELENIUM AND SELENIUM ALLOY EVAPORATION TECHNIQUE. MAR. 29, 1977.
4,016,310.—COATR HRDWR AND METH FOR OBTNG UNFRM PHROCNDTV LAYR ON A XEROGRAPHIC PHOTORECEPTOR. APR. 5, 1977.
4,109,902.—PHOTORECEPTOR FABRICATION. APR. 26, 1977.
4,023,523.—COATING HARDWARE AND METHOD FOR OBTAINING UNIFORM PHOTOCONDUCTIVE LAYERS ON A XEROGRAPHIC PHOTO. MAY 17, 1977.
4,072,518.—METHOD OF MAKING TRIGONAL SELENIUM INTERLAYERS BY GLOW DISCHARGE. FEB. 7, 1978.
4,075,013.—ELECTROPHOTOCHEMICAL PREPARATION OF SELENIUM PHOTOCONDUCTIVE MEMBERS. FEB. 21, 1978.
4,098,655.—METHOD FOR FABRICATING A PHOTORECEPTOR. JULY 4, 1978.

Class 1A 1B

3,312,548.—XEROGRAPHIC PLATES. APR. 4, 1967. BEL. 0691217, CAN. 0819658, FRA. 1505803, GRB. 1165579, JAP. 0650232.
3,355,289.—CYCLICAL XEROGRAPHIC PROCESSD UTILIZING A SELENIUM-TELLURIUM XEROGRAPHIC PLATE. NOV. 28, 1967.
3,427,157.—XEROGRAPHIC PROCESS UTILIZING A PHOTOCONDUCTIVE ALLOY OF THALLIUM IN SELNIUM. FEB. 11, 1969. CAN. 0834085, FRA. 1461161, GRB. 1132993, HOL. 0150924, ITL. 0749553, JAP. 0534762, MEX. 0085232.
3,489,560.—PHOTOCONDUCTIVE LAYR COMPRISN SELENIUM COMPOUND AND SOLID HYDROPHOBIC METL SALT OF A FATTY ACID. JAN. 13, 1970. BEL. 0711297, CAN. 0871632, FRA. 1544448, GRB. 1203237, ITL. 0815227, JAP. 0632160.
3,490,903.—ALLOYS OF ANTIMONY AND SELENIUM USED IN PHOTOCONDUCTIVE ELEMENTS. JAN. 20, 1970. AUS. 0412949, CAN. 0871074, FRA. 1533536, GRB. 1185389, ITL. 0805955, JAP. 0626127, SWD. 0318193.
3,511,649.—PROCESS OF REDUCING FATIGUE IN PHOTOCONDUCTIVE GLASSES. MAY 12, 1970. GRB. 1193472, JAP. 0604152.
3,524,745.—PHOTOCONDUCTIVE ALLOY OF ARSENIC ANTIMONY AND SELENIUM. AUG. 18, 1970. ARG. 0164055, AUS. 0410443, BEL. 0709132, CAN. 0884810, CHL. 0024255, FRA. 1550902, GRB. 1209971, IND. 0113988, ITL. 0833508, JAP. 9124370, LXB. 0055231, MEX. 0108993, NOR. 0127943, NZL. 0151243, PRU. 0009904, PTG. 0048919, SAF. 0680228, SPN. 0349235, STZ. 0495573, SWD. 0328189, URG. 0009683.
3,645,729.—METHOD OF TRANSFERRING ELECTROSTATIC LATENT IMAGES USING MULTIPLE PHOTOCONDUCTIVE LAYERS. FEB. 29, 1972.
3,690,252.—LITHOGRAPHIC INKING APPARATUS. SEPT. 12, 1972. CAN. 0919006.
3,709,683.—INFRARED SENSITIVE IMAGE RETENTION PHOTORECEPTOR. JAN. 9, 1973.
3,874,917.—METHOD OF FORMING VITREOUS SEMICONDUCTORS BY VAPOR DEPOSITING BISMUTH AND SELENIUM. APR. 1, 1975.
4,015,029.—SELENIUM AND SELENIUM ALLOY EVAPORATION TECHNIQUE. MAR. 29, 1977.
4,016,310.—COATR HRDWR AND METH FOR OBTNG UNFRM PHROCNDTV LAYR ON A XEROGRAPHIC PHOTORECEPTOR. APR. 5, 1977.
4,019,902.—PHOTORECEPTOR FABRICATION. APR. 26, 1977.
4,023,523.—COATING HARDWARE AND METHOD FOR OBTAINING UNIFORM PHOTOCONDUCTIVE LAYERS ON A XEROGRAPHIC PHOTO. MAY 17, 1977.
4,099,969.—COATING METHOD TO IMPROVE ADHESION OF PHOTOCONDUCTORS. JULY 11, 1978.
4,121,981.—ELECTROCHEMICAL METHOD FOR FORMING A SELENIUM-TELLURIUM LAYER IN A PHOTORECEPTOR. OCT. 24, 1978
4,126,457.—EVAPORATION TECHNIQUE FOR PRODUCING TEMPERATURE PHOTORECEPTOR ALLOYS. NOV. 21, 1978. CAN 1046864.
4,187,104.—ELECTROHOTTOGRAPHIC PHOTORECEPTOR. FEB. 5, 1980.

Class 1A 1C

3,251,686.—XEROGRAPHIC PROCESS. MAY 17, 1966. FRA. 1292831, GER. 1243979, GRB. 0996972, JAP. 0416023.

3,379,527.—PHOTOCONDUCTIVE INSULATORS COMPRISING ACTIVATED SULFIDES SELENIDES AND SULFOSELENIDES OF CADMIUM. APR. 23, 1968. CAN. 0907921, GRB. 1079065.
3,519,420.—METHOD OF CHARGING A ZINC OXIDE PHOTOCONDUCTIVE LAYER WITH A POSITIVE CHARGE. JULY 7, 1970.
3,522,040.—PHOTOSENSITIVE INSULATING MATERIAL. JULY 28, 1970. CAN. 0884808, GRB. 1171910, JAP. 0552966.
3,941,594.—ELECTROPHOTOGRAPHIC ELEMENT WITH ZNO AND TIO2. MAR. 2, 1976.
3,969,113.—PHOTOSENSITIVE BINDER LAYER FOR XEROGRAPHY CONTAINING TITANIUM OXIDE AND A CADMIUM PIGMENT. JULY 13, 1976.
3,975,306.—METHOD FOR IMPROVING THE PHOTOINDUCED DISCHARGE CHARACTERISTICS OF CERTAIN CADMIUM CHALCOGENIDE. AUG. 17, 1976.

Class 1A 1E

3,469,978.—PHOTOSENSITIVE ELEMENT. SEPT. 30, 1969. CAN. 0872173, GRB. 1171909, JAP. 0552967.

Class 1A 1F

3,288,604.—IMAGING METHOD USING AN ELEMENT HAVING A GLASS OVERCOATING. NOV. 29, 1966. CAN. 0815735.
3,397,982.—XIC PLATE W/INORGANIC GLASS BINDER HAVING OVERCOATING CONSISTING ESSENTIALLY OF ALUMINUM OXIDE. AUG. 20, 1968. ARG. 0150690, AUS. 0407349, BEL. 0674140, CAN. 0866142, FRA. 1460232, GER. 1497230, GRB. 1129674, ITL. 0822914, JAP. 0531894, MEX. 0085270, SWD. 0319976.
3,507,646.—ELECTROPHOTOGRAPHIC PROCESS USING A SINGLE PHASE PHOTOCONDUCTIVE GLASS IMAGING LAYER. APR. 21, 1970. ARG. 0164449, AUS. 0416137, BEL. 0691757, CAN. 0818383, FRA. 1511172, GER. 1522713, GRB. 1167520, ITL. 0787661, JAP. 0567233, MEX. 0105237, SPN. 0334896, STZ. 0472707, SWD. 0331793, VZL. 0024006.
3,565,713.—METHOD OF FORMING A CERAMIC IMAGE ON A CERAMIC SUBSTRATE. FEB. 23, 1971.

Class 1A 2

3,738,831.—CHALCOGEN ORGANIC COMPOUNDS USED IN ELECTROPHOTOGRAPHIC PLATES AND PROCESS. JUNE 12, 1973.
3,758,301.—ELECTROPHOTOGRAPHIC USE OF SELENIUM CONTAINING POLYMERS. SEPT. 11, 1973.
3,770,428.—ORGANIC PHOTOCONDUCTIVE MATERIAL. NOV. 6, 1973.
3,850,631.—PHOTOCONDUCTIVE ELEMENT WITH A POLYVINVLIDENE FLUORIDE BINDER. NOV. 26, 1974.
3,864,144.—PROCESS FOR PREPARATION OF PHOTOCONDUCTIVE FILMS FROM INTRACTABLE MATERIALS. FEB. 4, 1975. FRA. 740836, GRB. 1414158, ITL. 1010695, TIW. 0008534.
3,879,198.—ELECTROPHOTOGRAPHIC AMBIPOLAR PHOTOCONDUCTIVE COMPOSITION AND IMAGING METHOD. APR. 22, 1975.
3,882,087.—ORGANIC PHOTOCONDUCTIVE MATERIAL. MAY 6, 1975.
3,903,107.—DIRECT ALPHA TO X PHASE CONVERSION OF METAL CONTAINING PHTHALOCYANINE. SEPT. 2, 1975. BEL. 0815632, SAF. 0743536.
3,915,704.—PHOTOINDUCED ACID CATALYZED DEGRADATION OF DEGRADABLE POLYMERS. OCT. 28, 1975.
3,917,483.—PHOTOINDUCED ACID CATALIZED DEPOLYMERIZATION OF DEGRADABLE POLYMERS. NOV. 4, 1975.
3,923,762.—PROCESS FOR PREPARATION OF 2-ANTHRYL AND SUBSTITUTED 2-ANTHRYL FUNCTIONAL MONOMERS AND P. DEC. 2, 1975. BEL. 0822305, STZ. 0032598.
3,932,180.—DIRECT ALPHA TO X PHASE CONVERSION OF METAL-FREE PHTHALOCYANINE. JAN. 13, 1976. BEL. 0815632, SAF. 0743536.
3,943,108.—PHOTOCONDUCTIVE COMPOSITION OF AN ALDEHYDE CONDENSATE. MAR. 9, 1976.
3,951,658.—COLOR MODIFYING IMAGING METHOD AND ARTICLE. APR. 20, 1976.
3,954,906.—AMBIPOLAR PHOTOCONDUCTIVE COMPOSITION AND IMAGING METHOD. MAY 4, 1976. FRA. 7403086, GRB. 1446966.
3,978,029.—PHOTOCONDUCTIVE COMPOSITIONS AND IMAGING MEMBERS AND METHODS EMPLOYING SAME. AUG. 31, 1976. ARG. 0206212, BEL. 0816552, FRA. 7422479, SAF. 0744129.
3,981,848.—PHOTOCONDUCTIVE COMPOSITION AND IMAGING METHODS EMPLOYING SAME. SEPT. 21, 1976. ARG. 0206211, ATR. 0332734, FRA. 7422484.
4,043,812.—A PROCESS FOR PREPARATION OF 2-ANTHRYL & SUBSTITUTED 2-ANTHRYL FUNCTIONAL MONOMERS AND POLY. JUL 23, 1977. BEL. 822305, FRA. 7527053, STZ. 32598.
4,050,934.—ELECTRON ACCEPTOR MONOMERS & POLYMERS. SEPT. 27, 1977.
4,056,391.—METHOD FOR ENHANCING SOLID SOLUTION STABILITY OF ELECTRON ACCEPTOR MOLECULES AND ELECTROPHO. NOV. 1, 1977.
4,117,072.—PROCESS FOR ENHANCEMENT OF MECHANICAL PROPERTIES OF PHOTOCONDUCTIVE POLYMERS. SEPT. 26, 1978. FRA. 7531736. GRB. 1469371.
4,117,239.—PROCESS FOR PREPARATION OF 2-ANTHRYL AND SUBSTITUTED 2-ANTHRYL FUNCTIONAL MONOMERS & POLYMERS. SEPT. 26, 1978. BEL. 822305.
4,153,802.—ELECTRON ACCEPTOR MONOMERS AND POLYMERS. MAY 8, 1979. FRA. 7626102.
4,161,490.—ELECTRON ACCEPTOR MONOMERS. JULY 17, 1979. FRA. 7626102.
4,225,692.—ELECTRON ACCEPTOR MONOMERS AND POLYMERS. SEPT. 30, 1980. CAN. 1069370, FRA. 7626102, GRB. 1555086.
4,251,612.—DIELECTRIC OVERCOATED PHOTORESPONSIVE IMAGING MEMBER. FEB. 17, 1981.
4,275,132.—DIELECTRIC OVERCOATED PHOTORESPONSIVE IMAGING MEMBER AND IMAGING METHOD. JUNE 23, 1981.

Class 1A 2A

3,357,989.—METAL FREE PHTHALOCYANINE IN THE NEW X-FORM-SEE D2167 FOR RE27117. DEC. 12, 1967. CAN. 0860929, FRA. 1508173, GRB. 1169901, ITL. 0787592, JAP. 0560090, MEX. 0101543.
3,432,415.—ELECTROPHORETIC IMG. PROCESS USING PHOTOSENSITIVE XANTHENONIUM SALTS. MAR. 11, 1969. AUS. 0439502, BEL. 0743895, CAN. 0851118, GER. 1522701, GRB. 1155747, JAP. 0650631, MEX. 0104632.
3,442,781.—PHOTOELECTROPHORETIC AND XEROGRAPHIC IMG. PROC. EMPL. TRIPHENODIOXAZINES AS ELECTRIC. PHOTOSENSIT. MAY 6, 1969. AUS. 0445582, BEL. 0743894, CAN. 0855152, GRB. 0175452, JAP. 0611634.
3,445,225.—ELECTROPHOTOGRAPHIC IMAGING PROCESS. MAY 20, 1969. CAN. 0846121.
3,445,227.—ELECTROPHOTOGRAPHIC IMAGING PROCESSES EMPLOYING 2,4 DIAMINOTRIAZINES AS ELCTRCLY PHOTOSNSTV PRT. MAY 20, 1969. BEL. 0743891, CAN. 0852681, GER. 1522687, GRB. 1146019, JAP. 0617789.
3,448,028.—N-SBSTUD-8,13-DIOXODINAPHTHO-2-1-B,2,3-D-FURAN-6-CARBOXAMIDES AS ELCTLY PTOSNSTV MTLS IN ELCPHG. JUNE 3, 1969.
3,448,029.—ELECTROPHORETIC IMAGING PROCESS USING 8,13-DIOXODINAPTHO-2,1-B,2,3-D-FURAN-6-CARBOXAMIDE PIGMEN. JUNE 3, 1969.
3,448,030.—ELECTRICALLY PHOTOSENSITIVE PART. USEFUL IN PHOTOELECTROPHORETIC AND XEROGRAPHIC IMAGING PROCESSE. JUNE 3, 1969. AUS. 0445639, BEL. 0743893, CAN. 0943830, GRB. 1155554, JAP. 0686735.
3,482,970.—ELECTROPHOTOGRAPHIC PLATE AND PROCESS USING NAPHTHYLAZO COMPOUNDS AS THE PRIMARY PHOTOCONDUCTOR. DEC. 9, 1969. ATR. 0279351, AUS. 0453397, BEL. 0742978, CAN. 0869486, GRB. 1296390, ITL. 0878843, JAP. 0725059.
3,607,261.—INORGANIC CRYSTALLINE BINDERS FOR ELECTROPHOTOGRAPHIC PLATES. SEPT. 21, 1971.
3,615,409.—ELCTROPHOTOGRPHC PLATE AND PROCESS EMPLOYING A PHOTODNDCTV PIGMNT OF GENERAL FORMULA R2 N4 S3. OCT. 26, 1971.
3,640,710.—PHTHALOCYANINE PHOTOCONDUCTIVE ELEMENTS CONTAINING MULTIPLE BINDER MATERIALS. FEB. 8, 1972. ARG. 0184666, ATR. 0328861, AUS. 0456430, BEL. 0760751, CAN. 0933012, FRA. 7047636, GRB. 1333605, ITL. 0913999, PNM. 0002243, STZ. 0554550, SWD. 0365878, TIW. 0006738, USR. 0450420, VZL. 0032928.
3,672,979.—METHOD OF PRODUCING A PHTHALOCYANINE PHOTOCONDUCTIVE LAYER. JUNE 27, 1972. ARG. 0184673, AUS. 0457271, BEL. 0761135, CAN. 0951697, FRA. 7047702, GRB. 1334060, ITL. 0914074, JAP. 0753795, MEX. 0119529, PNM. 0002191, SPN. 0386759, STZ. 0571731, TIW. 0007180, VZL. 0032789.

3,708,292.—PI-FORM METAL PHTHALOCYANINE. JAN. 2, 1973. ARG. 0194234, BEL. 0783793, CAN. 0996931, GRB. 1396922, ITL. 0955644, MEX. 0128928.
3,789,216.—PHOTODETECTION DEVICE AND METHOD COMPRISING PHTHALOCYANINE. JAN. 29, 1974.
3,865,798.—PHOTOACTIVE POLYMERS INDUCED EXOCYCLIC QUARTET CONCEPT. FEB. 11, 1975. AUS. 0462805, BEL. 0790689, FRA. 7237458, GRB. 1411998, ITL. 0969902, MEX. 0133728, SPN. 0407984, STZ. 0028515, VZL. 003956.
3,895,945.—PROCESS FOR PREPARATION OF 'A DYESTUFF SENSITIZED PHOTOCONDUCTIVE COMPOSITION. JULY 22, 1975.
3,923,762.—PROCESS FOR PREPARATION OF 2-ANTHRYL AND SUBSTITUTED 2-ANTHRYL FUNCTIONAL MONOMERS AND P. DEC. 2, 1975. BEL. 0822305, STZ. 0032598.
3,951,654.—MTHD ENHNCMT RATE AND EFFICIENCY OF PHOTODSCHG OF ELCTRPHGRIC IMAGING MEMBERS COMPRSNG PHTHALOCYA. APR. 20, 1976.
3,970,602.—COPOLYMERS OF N-VINYLCARBAZOLE AND N-VINYLPHTHALIMIDE AND DERIVATIVES THEREOF. JULY 20, 1976. BEL. 0812436. FRA. 7409307, GRB. 1444048, ITL. 1010697, SPN. 0424411.
3,989,860.—REPAIR TECHNIQUE FOR PHOTORECEPTOR. NOV. 2, 1976.
4,006,017.—PHOTOCONDUCTIVE COMPOSITION ARTICLE AND PROCESS. FEB. 1, 1977.
4,012,122.—LIQUID CRYSTALLINE PLATEN FOR A ELECTROPHOTOGRAPHIC PRINTING MACHINE. MAR. 15, 1977.
4,046,563.—PHOTOCONDUCTIVE COMPOSITION CONTAINING A TRICYANOPYRENE, ARTICLE AND PROCESS OF USE. SEPT. 6, 1977. FRA. 7509147.
4,055,420.—SINGLE PHASE ORGANIC PHOTOCONDUCTIVE COMPOSITION. OCT. 25, 1977.
4,072,519.—PHOTOCONDUCTIVE COMPOSITION, AND ELEMENT. FEB. 7, 1978. FRA. 7509146.
4,092,161.—INORGANIC PHOTOCONDUCTORS WITH PHENYL SUBSTITUTED IMAGE TRANSPORT MATERIALS. MAY 30, 1978. AUS. 462805, BEL. 790689, CAN. 1007922, FRA. 7411475, GRB. 1462986, ITL. 969902, MEX. 133728, SPN. 407984, STZ. 28515, VZL. 33956.
4,122,114.—1-TRICYANOINYLPYRENE. OCT. 24, 1978.
4,232,102.—IMAGING SYSTEM. NOV. 4, 1980. BEL. 870340.

Class 1A 2B

3,408,182.—ELECTROPHOTOGRAPHIC MATERIALS AND METHODS EMPLOYING PHOTOCONDUCTIVE RESINOUS CHARGE TRANSFER COMP. OCT. 29, 1968. CAN. 0847805, FRA. 1463743, GER. 1522679, GRB. 1137665, ITL. 0755290, JAP. 0572185, MEX. 0107318.
3,408,183.—ELECTROPHOTOGRAPHIC MATERIALS AND METHODS EMPLOYING PHOTOCONDUCTIVE RESINOUS CHARGE TRANSFER COMP. OCT. 29, 1968. CAN. 0819066, FRA. 1463745, GER. 1522676, GRB. 1126048, ITL. 0755287, JAP. 0727091, MEX. 0106758.
3,408,184.—ELECTROPHOTOGRAPHIC MATERIALS AND METHODS EMPLOYING PHOTOCONDUCTIVE RESINOUS CHARGE TRNSFR COMPLE. OCT. 29, 1968. CAN. 0818382, FRA. 1463727, GRB. 1137664, ITL. 0755289, JAP. 0726382, MEX. 0105835.
3,408,185.—ELECTROPHOTOGRAPHIC MATERIALS AND METHOD EMPLOYING PHOTOCONDUCTIVE RESINOUS CHARGE TRANSFER COMP. OCT. 29, 1968. CAN. 0848383, FRA. 1463728, GER. 1645192, GRB. 1137476, ITL. 0755291, MEX. 0106763.
3,408,186.—ELECTROPHOTOGRAPHIC MATERIALS AND METHODS EMPLOYING PHOTOCONDUCTIVE RESINOUS CHARGE TRNSFR COMPLE. OCT.29,1968. CAN. 0846736, FRA. 1463746, GRB. 1138629, ITL. 0755288, JAP. 0569483, MEX. 0106589.
3,408,187.—ELECTROPHOTOGRAPHIC MATER AND METH EMPLOYING PHOTOCONDUCTIVE RESINOUS CHARGE TRANSFER COMPLEXES. OCT. 29, 1968. CAN. 0867298, GER. 1522721, GRB. 1163097, JAP. 0797719.
3,408,188.—ELECTROPHOTOGRAPHIC PLATE AND PROCESS COMPRISING PHOTOCONDUCTIVE CHARGE TRANSFER COMPLEXES. OCT. 29, 1968. CAN. 0869485, GRB. 1183516, JAP. 0797720.
3,408,189.—ELECTROPHOTOGRAPHIC PLATE AND PROCESS EMPLOYING PHOTOCONDUCTIVE CHARGE TRANSFER COMPLEXES. OCT. 29, 1968.
3,408,190.—ELECTROPHOTOGRAPHIC PLATE AND PROCESS EMPLOYING PHOTOCONDUCTIVE CHARGE TRANSFER COMPLEXES. OCT. 29, 1968. CAN. 0850019, GER. 1302772, GRB. 1182172.
3,536,482.—ELECTROPHOTOGRPHC IMG SYS INCL A HALOGEN TREATMENT STOP FOR MAKING BCKGRND AREAS TRANSPARENT. OCT. 27, 1970.
3,607,258.—ELECTROPHOTOGRAPHIC PLATE AND PROCESS. SEPT. 21, 1971. CAN. 0871634, GRB. 1174171.
3,865,798.—PHOTOACTIVE POLYMERS INDUCED EXOCYCLIC QUARTET CONCEPT. FEB. 11, 1975. AUS. 0462805, BEL. 0790689, FRA. 7237458, GRB. 1411998, ITL. 0969902, MEX. 0133728, SPN. 0407984, STZ. 0028515, VZL. 0033956.
3,879,201.—PERSISTENT PHOTOCONDUCTIVE COMPOSITIONS. APR. 22, 1975.
3,899,328.—ACTIVE MATRIX AND INTRINSIC PHOTOCONDUCTIVE POLYMER OF A LINEAR POLYSILOXANE. AUG. 12, 1975.
3,923,762.—PROCESS FOR PREPARATION OF 2-ANTHRYL AND SUBSTITUTED 2-ANTHRYL FUNCTIONAL MONOMERS AND P. DEC. 2. 1975. BEL. 0822305, STZ. 0032598.
3,957,725.—AN ACTIVE MATRIX AND INTRINSIC PHOTOCONDUCTIVE POLYMER. MAY 18, 1976. ITL. 1010430.
4,007,043.—PHOTOCONDUCTIVE ELEMENTS WITH COPOLYMER CHARGE TRANSPORT LAYERS. FEB. 8, 1977.
4,013,623.—INTRACHAIN CHARGE TRANSFER COMPLEXES. MAR. 22, 1977.
4,025,710.—INTRACHAIN CHARGE TRANSFER COMPLEXES. MAY 24, 1977.
4,033,769.—PERSISTENT PHOTOCONDUCTIVE COMPOSITIONS. JULY 5, 1977.
4,046,564.—ELECTROPHOTOGRAPHIC IMAGING MEMBERS WITH PHOTOCONDUCTIVE LAYER CONTAINING ELECTRON ACCEPTOR. SEPT. 6, 1977.
4,062,886.—FLUORENONE CARBOXYLE ACID ESTERS. DEC. 13, 1977. FRA. 7621895.
4,069,046.—POLYMERIZED VINYL CARBAZOLES SENSITIZED BY NITRO-SUBSTITUTED 9-DICYANOMETHYLENE FLUORENES. JAN. 17, 1978.
4,075,012.—INTRACHAIN CHARGE TRANSFER COMPLEXES USE IN ELECTROPHOTOGRAPHIC IMAGING. FEB. 21, 1978.
4,092,161.—INORGANIC PHOTOCONDUCTORS WITH PHENYL SUBSTITUTED IMAGE TRANSPORT MATERIALS. MAY 30, 1978.
AUS. 462805, BEL. 790689, CAN. 1007922, FRA. 7411475, GRB. 1462986, ITL. 969902, MEX. 133728, SPN. 407984, STZ. 28515, VZL. 33956.
4,098,984.—ELECTRON ACCEPTOR POLYMERS. JULY 4, 1978.
4,116,691.—ELECTROPHOTOGRAPHIC IMAGING MEMBER OF MONOMERS HAVING PENDANT ELECTRON ACCEPTOR GROUPS. SEPT. 26, 1978.
4,122,113.—9-FLUORENYL ACRYLATES. OCT. 24, 1978.
4,129,581.—MONOMERS HAVING PENDANT ELECTRON ACCEPTOR GROUPS-PROCESS FOR PREPARATION AND USE. DEC. 12, 1978.
4,143,225.—HOMOPOLYMERS OF A FLUORENONE DERIVATIVE HAVING PENDANT ELECTRON ACCEPTOR GROUPS. MAR. 6, 1979.
4,179,933.—MONOMERS HAVING PENDANT ELECTRON ACCEPTOR GROUPS—PROCESS FOR PREPARATION AND USE. OCT. 30, 1979.

Class 1A 2C

3,451,811.—ELECTROPHOTOGRAPHIC IMAGING PROCESSES USING ELECTRICALLY PHOTOSENSITIVE PHOTOCHROMIC MATERIALS. JUNE 24, 1969. CAN. 0828692, JAP. 0573734.
3,660,086.—ELCTRPHTGRPC PLATE AND PROCS EMPLYNG INORGNC PHOTCNDCTV MATRL W/PHOTOCHROMIC SENSITIVE AGENT. MAY 2, 1972.
3,961,948.—PHOTOCHROMIC IMAGING METHOD. JUNE 8, 1976.

Class 1A 2D

3,518,081.—IMAGE FORMATION AND DEVELOPMENT - REISSUED D 857R. JUNE 30, 1970. CAN. 0801270, GRB. 1085573.
RE29,357.—IMAGE FORMATION AND DEVELOPMENT—REISSUE OF 3,518,081—D 857. AUG. 16, 1977. CAN. 801270, GRB. 1085573.

Class 1A 3

3,312,547.—XEROGRAPHIC PLATE AND PROCESSES OF MAKING AND USING SAME. APR. 4, 1967.
3,341,326.—DARK DECAY CONTROLLED XEROGRAPHY. SEPT. 12, 1967. AUS. 0285843, CAN. 0729829, FRA. 1377592, GRB. 1029199, ITL. 0706101.

3,352,669.—PHOTOCONDUCTIVE MEMBER AND PROCESSES OF PREPARING AND USING SAME. NOV. 14, 1967. AUS. 0405164, CAN. 0834670, FRA. 1422625, GER. 1497194, GRB. 1052970, HOL. 0137891, ITL. 0749420, JAP. 0501912.
3,393,070.—XEROGRAPHIC PLATE WITH ELECTRIC FIELD REGULATING LAYER. JULY 16, 1968. CAN. 0871308, GER. 1490987, GRB. 1141452, JAP. 0764435, MEX. 0105660.
3,508,918.—XEROGRAPHIC PLATE CONTAINING ALUMINUM SELENIDE BARRIER LAYER. APR. 28, 1970. CAN. 0872175.
3,573,906.—ELECTROPHOTOGRAPHIC PLATE AND PROCESS. APR. 6, 1971. ARG. 0177890, AUS. 0441534, BEL. 0725173, BRA. 0088092, CAN. 0906801, CZC. 0157053, FRA. 1594981, GRB. 1217726, ITL. 0852743, SPN. 0379204, SWD. 0335063, USR. 0448658, VZL. 0029780.
3,723,110.—ELECTROPHOTOGRAPHIC PROCESS. MAR. 27, 1973.
3,765,757.—TRANSPORT ARRANGEMENT FOR THIN SHEET MATERIAL. OCT. 16, 1973. BEL. 0793551, CAN. 1004289, GRB. 1419978, ITL. 0972846, SPN. 0410107.
3,867,027.—TRANSPORT ARRANGEMENT FOR THIN SHEET MATERIAL. FEB. 18, 1975. BEL. 0793551, CAN. 1004289, GRB. 1419978, ITL. 0972846, SPN. 0410107.
3,907,650.—PHOTOSENSITIVE BINDER LAYER FOR XEROGRAPHY. SEPT. 23, 1975.
3,914,126.—NICKEL OXIDE INTERLAYERS FOR PHOTOCONDUCTIVE ELEMENTS. OCT. 21, 1975.
4,043656.—TRANSPARENCY COPYING MACHINE. AUG. 23, 1977.

Class 1A 4

3,251,686.—XEROGRAPHIC PROCESS. MAY 17, 1966. FRA. 1292831, GER. 1243979, GRB. 0996972, JAP. 0416023.
3,256,089.—MASKED PLATE XEROGRAPHY. JUNE 14, 1966.
3,288,604.—IMAGING METHOD USING AN ELEMENT HAVING A GLASS OVERCOATING. NOV. 29, 1966. CAN. 0815735.
3,397,982.—XIC PLATE W/INORGANIC GLASS BINDER HAVING OVERCOATING CONSISTING ESSENTIALLY OF ALUMINUM OXIDE. AUG. 20, 1968. ARG. 0150690, AUS. 0407349, BEL. 0674140, CAN. 0866142, FRA. 1460232, GER. 1497230, GRB. 1129674, ITL. 0822914, JAP. 0531894, MEX. 0085270, SWD. 0319976.
3,434,832.—XEROGRAPHIC PLATE COMPRISING A PROTECTIVE COATING OF A RESIN MIXED WITH A METALLIC STEARATE. MAR. 25, 1969. CAN. 0835883, FRA. 1454672, GER. 1497223, GRB. 1128156, ITL. 0772535, JAP. 0545757, MEX. 0085603.
3,488,189.—ELECTROPHOTOGRAPHIC RECORDING MEMBER HAVING SOLID CRYSTALLINE PLASTICIZR AVAILBL AT IMGNG SURFA. JAN. 6, 1970. CAN. 0866700, FRA. 1506810, GRB. 1183205, ITL. 0788976, JAP. 0570734, MEX. 0108241.
3,607,258.—ELECTROPHOTOGRAPHIC PLATE AND PROCESS. SEPT. 21, 1971. CAN. 0871634, GRB. 1174171.
3,816,115.—METHOD FOR FORMING A PLURALITY OF ELECTROSTATIC LATENT IMAGES ON AN ELECTROPHOTOGRAPHIC PLATE. JUNE 11, 1974.
3,860,421.—N-ALKYL MORPHOLINE TREATMENT OF A SELENIUM-CONTAINING PHOTOCONDUCTIVE LAYER. JAN. 14, 1975.
3,865,798.—PHOTOACTIVE POLYMERS INDUCED EXOCYCLIC QUARTET CONCEPT. FEB. 11, 1975. AUS. 0462805, BEL. 0790689, FRA. 7237458, GRB. 1411998, ITL. 0969902, MEX. 0133728, SPN. 0407984, STZ. 0028515.
3,884,690.—POLYESTER PHOTOCONDUCTORS AND MATRIX MATERIALS. MAY 20, 1975.
3,896,184.—POLYMERS OF BENZANTHRACENE AS ACTIVE MATRIX MATERIALS. JULY 22, 1975.
3,899,328.—ACTIVE MATRIX AND INTRINSIC PHOTOCONDUCTIVE POLYMER OF A LINEAR POLYSILOXANE. AUG. 12, 1975.
3,957,725.—AN ACTIVE MATRIX AND INTRINSIC PHOTOCONDUCTIVE POLYMER. MAY 18, 1976. ITL. 1,010,430.
4,022,956.—POLYMERS OF BENZANTHRACENE AS ACTIVE MATRIX MATERIALS. MAY 10, 1977.
4,027,964.—IMAGING METHOD AND APPARATUS. JUNE 7, 1977. ARG. 0190535, BEL. 0777714, CAN. 0949825, FRA. 7201000, GRB. 1374301, ITL. 0946355, MEX. 0124981.
4,045,413.—POSSIBLE ACTIVE MATRIX POLYMERS. AUG. 30, 1977. FRA. 7432710.
4,063,943.—ELECTROSTATOGRAPHIC IMAGING METHOD. DEC. 20, 1977.
4,063,945.—ELECTROSTATOGRAPHIC IMAGING METHOD. DEC. 20, 1977.
4,092,161.—INORGANIC PHOTOCONDUCTORS WITH PHENYL SUBSTITUTED IMAGE TRANSPORT MATERIALS. MAY 30, 1978.AUS. 462805, BEL. 790689, CAN. 1007922, FRA. 7411475, GRB. 1462986, ITL. 969902, MEX. 133728, SPN. 407984, STZ. 28515, VZL. 33956.
4,254,199.—ELECTROPHOTOGRAPHIC IMAGING METHOD HAVING A DOUBLE CHARGING SEQUENCE. MAR. 3, 1981. BEL. 872427.

Class 1A 5

3,411,903.—XEROGRAPHIC METHOD AND PLATE COMPRISING PHOTOCONDUCTIVE INSULATING FIBERS. NOV. 19, 1968. ARG. 0149620, ATR. 0270379, AUS. 0410718, BEL. 0672668, BRA. 0084119, CAN. 0834669, CHL. 0023648, CLB. 0014943, DNK. 0120577, EGR. 0055545, FRA. 1464792, GER. 1497224, GRB. 1084024, GRK. 0031509, IND. 0102560, ISR. 0024632, ITL. 0734376, JAP. 0724233, LXB. 0049849, MEX. 0098487, NOR. 0122817, NZL. 0143432, PLO. 0067959, PLP. 0004547, PNM. 0001533, PRU. 0008384, PTG. 0044879, SAF. 0656280, SPN. 0319795, STZ. 0458076, SWD. 0308250, THL. 1084024, TIW. 0003735, URG. 0006624, VZL. 0023996.
3,947,184.—IMAGING METHOD. MAR. 30, 1976.
3,972,718.—ELECTROSTATOGRAPHIC GRAVURE MEMBER. AUG. 3, 1976.

Class 1A 6

3,288,602.—XEROGRAPHIC PLATE AND METHOD. NOV. 29, 1966. CAN. 0795978, GER. 1237902, GRB. 1029181, ITL. 0690835, JAP. 0578399.
3,621,248.—METHOD USING XERORADIOGRAPHIC PLATE INSENSITIVE TO VISIBLE LIGHT. NOV. 16, 1971.
3,684,500.—METHOD OF FORMING PERMANENT ELECTROSTATIC IMAGE WITH TWO-LAYERED PHOTORECEPTOR. AUG. 15, 1972.
3,843,407.—BLADE CLEANING WITH REVERSE MOVEMENT. OCT. 22, 1974.
3,907,650.—PHOTOSENSITIVE BINDER LAYER FOR XEROGRAPHY. SEPT. 23, 1975.
3,914,126.—NICKEL OXIDE INTERLAYERS FOR PHOTOCONDUCTIVE ELEMENTS. OCT. 21, 1975.
3,994,791.—PROCESS FOR PREPARATION OF SOLID PHASE DISPERSION OF PHOTOCONDUCTIVE MATERIALS. NOV. 30, 1976.
4,049,449.—METHOD FOR FORMING AN ELECTROPHOTOGRAPHIC MEMBER. SEPT. 20, 1977.

Class 1B

3,730,453.—EARLY END-OF-TAPE DETECTION. MAY 1, 1973. CAN. 0939052, GRB. 1334581.
3,889,292.—APPARATUS FOR MAKING MULTIPLE ALPHANURMIC COPIES OF A BINARY CODED MESSAGE. JUNE 10, 1975. CAN. 0986572.
4,032,746.—CONTROL SYSTEM FOR A FUSING APPARATUS. JUNE 28, 1977.
4,076,858.—ELECTROSTATIC COPYING PROCESS WITH CHARGING OF THE ORIGINAL. FEB. 28, 1978.

Class 1B 1

3,244,546.—ELECTROSTATIC IMAGE REPRODUCTION. APR. 5, 1966. CAN. 0847532, GRB. 1040371, JAP. 0477223.
3,484,162.—ELECTROVISCOUS RECORDING. DEC. 16, 1969.
3,518,698.—IMAGING SYSTEM. JUNE 30, 1970. CAN. 0905481, FRA. 1542838, GRB. 1200804, JAP. 0604154, MEX. 0099911.
3,561,957.—ELECTROPHOTOGRAPHIC PROCESS USING A HIGH INTENSITY ELECTROMAGNETIC RADIATION SOURCE. FEB. 9, 1971. CAN. 0914266, GRB. 1207361.
3,631,507.—METHOD OF REDISTRIBUTING CHARGE ON A DIELECTRIC MEDIUM. DEC. 28, 1971.
3,677,750.—PHOTOELECTROSOLOGRAPHIC IMAGING. JULY 18, 1972. GRB. 1326934.
3,686,678.—DUAL MODE ELECTROSTATIC PRINTING. AUG. 22, 1972. BEL. 0747125, CAN. 0952574, FRA. 7007650, GRB. 1297996, JAP. 0753534.
3,693,185.—ELECTROSTATIC RECORDING HEAD AND METHOD OF MANUFACTURE. SEPT. 19, 1972.
3,719,481.—ELECTROSTATOGRAPHIC IMAGING PROCESS. MAR. 6, 1973.

3,729,123.—PRINTING MACHINE AND METHOD. APR. 24, 1973. CAN. 0959532, FRA. 7142517, GRB. 1348014.
3,729,334.—IMAGING PROCESS. APR. 24, 1973.
3,793,107.—ELECTROSTATIC RECORDING HEAD AND METHOD OF MANUFACTURE. FEB. 19, 1974.
3,829,185.—HOUSING ASSEMBLY FOR ELECTROSTATIC PRINTING MACHINE. AUG. 13, 1974.
3,854,942.—TRANSPARENCY FOR MULTI-COLOR ELECTROSTATIC COPYING. DEC. 17, 1974.
3,859,960.—PRINTING MACHINE WITH ELECTROSTATIC WEB DEVELOPING APPARATUS. JAN. 14, 1975. CAN. 0959532, FRA. 7142517, GRB. 1348014.
3,937,177.—ELECTROSTATIC PRINTING MACHINE WITH IMPROVED TONER FOUNTAIN AND RECOVERY, FEB. 10, 1976 .
3,985,666.—PLASTIC MATERIALS MIXED WITH POLAR GROUP CONTAINING MATERIALS. OCT. 12, 1976. ARG. 0195541, BEL. 0781970, CAN. 0976742, FRA. 7213873, GRB. 1396141, ITL. 0951326, MEX. 0126158, VZL. 0032937.
4,042,939.—PRINTER/PLOTTER STYLE SYSTEM FOR CONFINED INSTALLATION AND METHOD. AUG. 16, 1977.
4,234,424.—ELECTROSTATIC RECORDING APPARATUS. MAR. 3, 1981.

Class 1B 2

3,196,013.—XEROGRAPHIC INDUCTION RECORDING WITH MECHANICALLY DEFORMABLE IMAGE-FORMATION IN A DEFORMABLE LAY. JULY 20, 1965. CAN. 0778520, FRA. 1360084, GER. 1253581, ITL. 0711488, JAP. 0649672.
3,321,308.—XEROGRAPHIC INDUCTION RECORDING. MAY 23, 1967. CAN. 0778521, FRA. 1393821, GRB. 1049903, ITL. 0801906, JAP. 0537660.
3,551,146.—INDUCTION IMAGING SYSTEM. DEC. 29, 1970.
3,703,376.—INDUCTION SYSTEM. NOV. 21, 1972. ARG. 0190247, MEX. 0123032.
3,738,855.—INDUCTION IMAGING SYSTEM. JUNE 12, 1973.
3,778,841.—INDUCTION IMAGING SYSTEM. DEC. 11, 1973. ARG. 0190247, MEX. 0123032.
3,953,206.—IMAGING METHOD. APR. 27, 1976.
4,050,804.—LIQUID INK IMAGING SYSTEM. SEPT. 27, 1977.
4,056,314.—LIQUID INK IMAGING SYSTEM. NOV. 1, 1977.
4,076,405.—LIQUID INK IMAGING SYSTEM. FEB. 28, 1978.
4,197,331.—A NOVEL ELECTROSTATIC IMAGING SYSTEM. APR. 8, 1980.

Class 1B 3

3,160,091.—HIGH SPEED XEROPRINTER AND METHOD THEREFOR. DEC. 8, 1964. GRB. 0978349.
3,318,698.—XEROPRINTING REPRODUCTION. MAY 9, 1967. CAN. 0790236, FRA. 1394421, GRB. 1055323, ITL. 0801547, JAP. 0504497.
3,515,584.—XEROPRINTING MASTER. JUNE 2, 1970. CAN. 0882600, GRB. 1204246, JAP. 0659019.
3,547,627.—LITHOGRPHC PRINTG MASTER AND METHOD EMPLOYING A CRYSTALLINE PHOTOCONDUCTIVE IMAGING LAYER. DEC. 15, 1970.
3,574,614.—PROCESS OF PREPARING MULTIPLE COPIES FROM A XEROPRINTING MASTER. APR. 13, 1971. ATR. 0305769, AUS. 0448396, BEL. 0743660, CAN. 0882599, FRA. 6944513, GRB. 1209060, ITL. 0879118, JAP. 0713808.
3,967,818.—DUPLICATING SYSTEM. JULY 6, 1976.
4,047,945.—XEROPRINTING MASTER AND PROCESS. SEPT. 13, 1977.

Class 1B 4A

3,653,891.—FORMS OVERLAY TECHNIQUE USING TESI. APR. 4, 1972. ARG. 0184314, AUS. 0459354, BEL. 0761030, CAN. 0946912, FRA. 7047635, GRB. 1339714, ITL. 0913996, MEX. 0119467.
4,023,895.—ELECTROSTATOGRAPHIC APPARATUS. MAY 17, 1977.

Class 1B 4B

3,182,591.—IMAGE FORMING APPARATUS AND METHOD. MAY 11, 1965.
3,208,076.—ELECTROSTATIC PRINTER. SEPT. 21, 1965. GRB. 0999260.
3,217,330.—ELECTROSTATIC PRINTING UTILIZING PRINT-THROUGH RECORDING. NOV. 9, 1965. CAN. 0773752, GRB. 1001152.
3,234,359.—RECORD CARD SCANNING APPARATUS. FEB. 8, 1966.
3,234,904.—DEVICE FOR TESIPRINTING. FEB. 15, 1966. AUS. 0277492, CAN. 0804878, FRA. 1367728, GRB. 1024635, ITL. 0697883.
3,257,222.—ELECTROSTATIC RECORDING METHOD AND APPARATUS USING SHAPED ELECTRODES. JUNE 21, 1966. CAN. 0736231, GRB. 1027438, JAP. 0451019.
3,289,209.—ELECTROSTATIC MATRIX PRINTER. NOV. 29, 1966. CAN. 0707049, FRA. 1357858, GER. 1447873, GRB. 1018513, ITL. 0694321, JAP. 0440456.
3,342,126.—MULTIPLE ELECTROGRAPHIC PRINTER HAVING PLURAL UNITS CONNECTED TO COMMON DRIVE MEANS. SEPT. 19, 1967. CAN. 0825341, GRB. 1182685, JAP. 0648073.
3,348,232.—ASYNCHRONOUS PAGE-AT-A-TIME PRINTER. OCT. 17, 1967. CAN. 0709971, GRB. 1025487, JAP. 0462803.
3,358,592.—ELECTROGRAPHIC PRINTING. DEC. 19, 1967. CAN. 0896701, FRA. 1514749, GER. 1512401, GRB. 1182686, ITL. 0793834, MEX. 0098070.
3,430,254.—TESI PRINTING WITH FLEXIBLE ELECTRODE ON ENDLESS BELT. FEB. 25, 1969.
3,438,052.—AIR-SUPPORTED HOUSING CONTAINING TESI PRINTING DRUM. APR. 8, 1969. CAN. 0827330, GRB. 1149349.
3,495,269.—ELECTROGRAPHIC RECORDG METH AND APPRTS W/INERT GASEOUS DISCHARGE IONIZATION AND ACCELERATION GAPS. FEB. 10, 1970. ARG. 0174765, ATR. 0309208, AUS. 0413341, BEL. 0707986, CAN. 0865837, CZC. 0164808, FRA. 1551296, GRB. 1205790, ITL. 0819587, JAP. 0587936, MEX. 0103538, SPN. 0348328, SWD. 0346867, USR. 0291520.
3,599,225.—ELECTROSTATIC RECORDING APPARATUS - AIR GAP APERTURE BELT COMMUNICATIONS PRINTER. AUG. 10, 1971. CAN. 0882319, GRB. 1226436, JAP. 0675796.
3,644,930.—MULTI-STYLUS RECORDER. FEB. 22, 1972. ARG. 0181835, AUS. 0457379, BEL. 0751150, CAN. 0944812, CHL. 0025752, FRA. 7019463, GRB. 1297110, ITL. 0893693, MEX. 0119071, SPN. 0380273, SWD. 0368289, TIW. 0005822, VZL. 0027516.
3,673,600.—ELECTROGRAPHIC RECORDING METHOD AND APPARATUS. JUNE 27, 1972. CAN. 0947361, GRB. 1318605.
3,673,603.—RECIPROCATING CARRIAGE FOR ELECTROGRAPHIC PRINTING. JUNE 27, 1972. CAN. 0937629, GRB. 1346647.
3,686,676.—DUAL MODE ELECTROGRAPHIC RECORDER. AUG. 22, 1972. CAN. 0954293.
3,686,679.—MULTI-STYLUS RECORDING ASSEMBLY. AUG. 22, 1972.
3,714,665.—ELECTROSTATIC RECORDING WITH IMPROVED ELECTROSTATIC CHARGE RETENTION. JAN. 30, 1973.
3,717,880.—DUAL MODE ELECTROGRAPHIC RECORDING. FEB. 20, 1973. BEL. 0774564, CAN. 0948271, FRA. 7139638, GRB. 1366129, ITL. 0937674.
3,766,850.—DEVELOPING MEANS FOR ELECTROSTATIC PRINTING APPARATUS. OCT. 23, 1973. CAN. 0972551, FRA. 7246855, GRB. 1415325, ITL. 0973310, SWD. 7216975.
3,771,184.—PRINTING APPARATUS. NOV. 13, 1973. CAN. 0973704, FRA. 7246858, GRB. 1415200, ITL. 0973321, SWD. 7216973.
3,795,010.—WRITING APPARATUS AND METHOD OF MANUFACTURE. FEB. 26, 1974.
3,806,238.—FORMS OVERLAY TECHNIQUE USING TEST. APR. 23, 1974.
3,811,766.—DEVELOPING APPARATUS. MAY 21, 1974. ARG. 0183333, AUS. 0446187, BEL. 0747127, CAN. 0879412, EGR. 0084803, FRA. 7008249, GRB. 1296417, ITL. 0898245, JAP. 0770134, MEX. 0112930, SPN. 0377301, STZ. 0521614, SWD. 0361749, TIW. 0006826, USR. 0352484.
3,875,578.—ENVELOPED STYLUS RECORDER. APR. 1, 1975. CAN. 0947360, FRA. 7008242, GRB. 1296416.
3,971,042.—WRITING APPARATUS AND METHOD OF MANUFACTURE. JULY 20, 1976.

Class 1C

4,072,522.—METHOD OF TREATING PHOTOCONDUCTIVE ZINC OXIDE. FEB. 7, 1978.

Class 1C 1

3,236,165.—XEROGRAPHIC REPRODUCING APPARATUS. FEB. 22, 1966. CAN. 0771829, JAP. 0547196.
3,343,142.—XEROGRAPHIC CODING AND INFORMATION STORAGE ON A SPECULAR BUSINESS MA-

CHINE CARD. SEPT. 19, 1967. CAN. 0844786, GRB. 1047261, JAP. 0701182.

3,437,020.—MICROFILM TITLING APPARATUS. APR. 8, 1969. CAN. 0837780, GRB. 1191019, JAP. 0572188.

3,499,374.—XEROGRAPHIC PRINTER. MAR. 10, 1970. AUS. 0415164, BEL. 0677146, CAN. 0846424, FRA. 1470069, GRB. 1135603, ITL. 0762255, MEX. 0091183, SWD. 0327142.

3,521,950.—XEROGRAPHIC REPRODUCING APPARATUS. JULY 28, 1970. ARG. 0184148, ATR. 0317675, AUS. 0441739, BEL. 0713876, CAN. 0877511, CHL. 0024535, DNK. 0129304, FRA. 1558225, GRB. 1231622, GRK. 0037839, IND. 0124668, ISR. 0029824, ITL. 0831700, JAM. 0001853, JAP. 0774498, LXB. 0055912, MEX. 0102085, NOR. 0131313, NZL. 0159801, PRU. 0009366, PTG. 0049474, SAF. 6872518, SPN. 0352885, STZ. 0505015, SWD. 7012263, UAR. 0008668, URG. 0009239, VZL. 0025077.

3,689,143.—REPRODUCING MACHINE. SEPT. 5, 1972.

4,047,810.—DUAL MODE COPYING MACHINE. SEPT. 13, 1977.

Class 1C 2

3,236,165.—XEROGRAPHIC REPRODUCING APPARATUS. FEB. 22, 1966. CAN. 0771829, JAP. 0547196.

3,379,106.—XEROGRAPHIC REPRODUCTION APPARATUS. APR. 23, 1968. ATR. 0300567, AUS. 0416116, BEL. 0674602, CAN. 0821718, DNK. 0117045, FRA. 1475712, GRB. 1135742, ITL. 0750206, MEX. 0095580, SPN. 0321099, STZ. 0509924, SWD. 6912065.

3,480,360.—XEROGRAPHIC COPYING APPARATUS. NOV. 25, 1969. ARG. 0180571, ATR. 0301344, AUS. 0310556, BEL. 0704978, CAN. 0870794, CHL. 0023569, FRA. 1540839, GRB. 1206964, GRK. 0035147, HUN. 0158496, IND. 0112715, ITL. 0827017, LXB. 0054635, MEX. 0102269, NZL. 0156632, PRU. 0009341, PTG. 0048460, SAF. 0676065, SPN. 0345998, STZ. 0487439, SWD. 0337743, URG. 0008847, VZL. 0023675.

3,592,539.—RECORDING APPARATUS. JULY 13, 1971. CAN. 0917230.

3,689,143.—REPRODUCING MACHINE. SEPT. 5, 1972.

Class 1C 3

3,212,888.—METHOD FOR DEVELOPING LATENT ELECTROSTATIC CHARGE HALFTONE IMAGES. OCT. 19, 1965. GER. 1284302, GRB. 1017683, JAP. 0470423.

3,281,857.—XEROGRAPHIC TRANSFER PLATEN. OCT. 25, 1966. CAN. 0733683, GRB. 1025199.

3,535,036.—APPARATUS FOR FORMING HALF-TONE LINE SCREEN WITH A LENS. OCT. 20, 1970. CAN. 0909309, GRB. 1253887.

3,698,893.—METHODS OF ORGANIZED THERMOPLASTIC XEROGRAPHY AND PHOTORECEPTOR STRUCTURE THEREFOR. OCT. 17, 1972.

3,873,310.—METHOD OF CONTROLLING THE BRIGHTNESS ACCEPTANCE RANGE AND TONAL CONTRAST OF XEROGRAPHIC PLATE. MAR. 25, 1975. GRB. 1414951.

3,905,822.—COMPOUND SCREEN FOR OBJECT SCREENING. SEPT. 16, 1975. GRB. 1459558.

3,912,510.—ELECTROPHOTOGRAPHIC PROCESS EMPLOYING A COMPOUND DOCUMENT SCREEN. OCT. 14, 1975. GRB. 1459558.

4,013,355.—NOTCH FILTER FOR COLOR TRANSPARENCY COPYING MACHINES. MAR. 22, 1977.

4,014,607.—REMOVABLE SCREENING SYSTEM FOR A TRANSPARENCY REPRODUCTION MACHINE. MAR. 29, 1977.

4,025,181.—A SCREEN CLEANING DEVICE. MAY 24, 1977.

4,043,656.—TRANSPARENCY COPYING MACHINE. AUG. 23, 1977.

4,051,536.—ELECTRONIC HALFTONE IMAGING SYSTEM. SEPT. 27, 1977.

4,066,353.—HALF TONE IMAGING SYSTEM. JAN. 3, 1978.

4,068,940.—VARIABLE CONTRAST OPTICAL SCREENING SYSTEM. JAN. 17, 1978.

4,072,414.—SCREEN FOR AN ELECTROPHOTOGRAPHIC PRINTING MACHINE. FEB. 7, 1978.

4,080,055.—A HALF-TONE COLOR COPIER. MAR. 21, 1978.

4,083,632.—MULTI FREQUENCY SCREEN. APR. 11, 1978.

4,090,786.—MULTI-COLOR SCREEN FOR ELECTROPHOTOGRAPHIC PRINTING. MAY 23, 1978.

4,095,889.—EXPOSURE SYSTEM FOR AN ELECTROPHOTOGRAPHIC PRINTING MACHINE. JUNE 20, 1978.

4,108,654.—COLOR ELECTROPHOTOGRAPHIC PROCESS EMPLOYING A DOCUMENT SCREEN. AUG. 22, 1978. FRA. 7514227. GRB. 1490898.

4,130,841.—VARIABLE FREQUENCY HALF-TONE IMAGING APPARATUS. DEC. 19, 1978.

4,149,183.—ELECTRONIC HALFTONE GENERATOR. APR. 10, 1979.

4,149,194.—VARIABLE ANGLE ELECTRONC HALFTONE SCREENING. APR. 10, 1979.

4,185,304.—ELECTRONIC HALFTONE SCREENING. JAN. 22, 1980.

4,196,451.—ELECTRONIC HALFTONE GENERATOR. APR. 1, 1980.

4,196,452.—TONER ERROR CONTROL FOR IMAGE CONTOUR REMOVAL. APR. 1, 1980.

4,196,453.—IMAGE SCREENING IMAGING SYSTEM. APR. 1, 1980.

4,196,454.—TONER ERROR CONTROL FOR RELATIVELY LARGE IMAGE AREAS. APR. 1, 1980.

4,214,277.—HALFTONE IMPLEMENTATION APPARATUS. JULY 22, 1980.

4,259,694.—ELECTRONIC RESCREEN TECHNIQUE FOR HALFTONE PICTURES. MAR. 31, 1981.

Class 1C 4

3,196,009.—ELECTROSTATIC IMAGE LIQUID DEFORMATION DEVELOPMENT. JULY 20, 1965. ATR. 0267320, AUS. 0273895, BEL. 0631984, CAN. 0768329, DNK. 0129676, FRA. 1408156, GER. 1497058, GRB. 1043981, HOL. 0134043, ISR. 0019144, ITL. 0695213, JAP. 0620918, LXB. 0043704, MEX. 0080571, NOR. 0123260, SAF. 0001947, STZ. 0448745, SWD. 0315502.

3,196,010.—ELECTROPHOTOGRAPHIC PROCESS FOR FORMATION OF DEFORMATION IMAGES IN DEFORMABLE INTERFERENCE FILM. JULY 20, 1965. CAN. 0790232, FRA. 1364100, GRB. 1036738, ITL. 0695214, JAP. 0510166.

3,196,012.—HALF-TONE XEROGRAPHY WITH THERMOPLASTIC DEFORMATION OF THE IMAGE. JULY 20, 1965. CAN. 0760623, FRA. 1359565, GER. 1497060, GRB. 1040836, ITL. 0697483, JAP. 0478444.

3,196,013.—XEROGRAPHIC INDUCTION RECORDING WITH MECHANICALLY DEFORMABLE IMAGE FORMATION IN A DEFORMABLE LAY. JULY 20, 1965. CAN. 0778520, FRA. 1360084, GER. 1253581, ITL. 0711488, JAP. 0649672.

3,307,941.—PLASTIC DEFORMATION IMAGING FILM AND PROCESS. MAR. 7, 1967. CAN. 0801262.

3,419,885.—IMAGE DEVELOPMENT OF THERMOPLASTIC LAYERS. DEC. 31, 1968. CAN. 0785985, GRB. 1117644, JAP. 0537663.

3,436,216.—IMAGE STORAGE COMPRISING A THERMOPLASTIC DEFORMATION PATTERN. APR. 1, 1969. CAN. 0807326, FRA. 1488094, GRB. 1160731, ITL. 0774940.

3,445,227.—ELECTROPHOTOGRAPHIC IMAGING PROCESSES EMPLOYING 2,4 DIAMINOTRIAZINES AS ELCTRCLY PHOTOSNSTV PRT. MAY 20, 1969. BEL. 0743891, CAN. 0852681, GER. 1522687, GRB. 1146019, JAP. 0617789.

3,448,028.—N-SBSTUD-8,13-DIOXODINAPHTHO-2-1-B,2,3-D-FURAN-6-CARBOXAMIDES AS ELCTLY PTOSNSTV MTLS IN ELCPHG. JUNE 3, 1969.

3,448,029.—ELECTROPHORETIC IMAGING PROCESS USING 8,13-DIOXODINAPTHO-2,1-B,2,3-D-FURAN-6-CARBOXAMIDE PIGMEN. JUNE 3, 1969.

3,448,030.—ELECTRICALLY PHOTOSENSITIVE PART. USEFUL IN PHOTOELECTROPHORETIC AND XEROGRAPHIC IMAGING PROCESSE. JUNE 3, 1969. BEL. 0743893, CAN. 0943830, GRB. 1155554, JAP. 0686735.

3,698,892.—METHODS OF THERMOPLASTIC XEROGRAPHY AND APPARATUS THEREFOR. OCT. 17, 1972. CAN. 0949117, GRB. 1343191.

3,698,893.—METHODS OF ORGANIZED THERMOPLASTIC XEROGRAPHY AND PHOTORECEPTOR STRUCTURE THEREFOR. OCT. 17, 1972.

3,716,359.—CYCLIC RECORDING SYSTEM BY THE USE OF AN ELASTOMER IN AN ELECTRIC FIELD. FEB. 13, 1973. ARG. 0196734, AUS. 0461213, BEL. 0777320, CAN. 0953990, FRA. 7147891, GRB. 1380057, ITL. 0944392, MEX. 0131400, SPN. 0398306.

3,719,483.—METHODS OF ORGANIZED THERMOPLASTIC XEROGRAPHY AND PHOTORECEPTOR STRUCTURE THEREFOR. MAR. 6, 1973.

3,730,621.—CONTROL OF ELECTROSTATIC DEFORMATION OF THERMOPLASTIC FILM. MAY 1, 1973.

3,795,514.—DEFORMATION IMAGING METHOD. MAR. 5, 1974.

3,842,406.—CYCLIC RECORDING SYSTEM BY THE USE OF AN ELASTOMER IN AN ELECTRIC FIELD. OCT. 15, 1974. ARG. 0196734, AUS. 0461213, BEL. 0777320, CAN. 0953990, FRA. 7147891, GRB. 1380057, ITL. 0944392, MEX. 0131400, SPN. 0398306.

3,858,973.—METHODS OF THERMOPLASTIC XEROGRAPHY AND APPARATUS THEREFOR. JAN. 7, 1975. CAN. 0949117, GRB. 1343191.

3,888,591.—IMAGE SUBTRACTION APPARATUS. JUNE 10, 1975.

3,932,025.—IMAGING SYSTEM. JAN. 13, 1976.

3,944,358.—COLOR IMAGE REPRODUCTION SYSTEMS. MAR. 16, 1976.

3,946,433.—PHASE IMAGE SCANNING METHOD. MAR. 23, 1976. BEL. 0835551.

3,951,533.—COLOR IMAGE REPRODUCTION SYSTEM. APR. 20, 1976.

3,961,950.—IMAGING SYSTEM. JUNE 8, 1976.

3,980,476.—IMAGING SYSTEM. SEPT. 14, 1976.

3,997,243.—COLOR IMAGE REPRODUCTION SYSTEM. DEC. 14, 1976.

3,999,988.—METHOD FOR REAL-TIME COLOR MASKING. DEC. 28, 1976.

4,018,603.—DEFORMATION IMAGING SYSTEM USING THERMOPLASTIC AND ELASTOMERIC LAYERS. APR. 19, 1977.

4,021,236.—IMAGING SYSTEM. MAY 3, 1977.

4,023,969.—DEFORMABLE ELASTOMER IMAGING MEMBER EMPLOYING AN INTERNAL OPAQUE DEFORMABLE METALLIC LAYER. MAY 17, 1977.

4,065,308.—DEFORMATION IMAGING ELEMENT. DEC. 27, 1977.

4,079,421.—IMAGE SCANNING SYSTEM. MAR. 14, 1978.BEL. 835551, SPN. 442965.

4,163,667.—DEFORMABLE IMAGING MEMBER USED IN ELECTRO-OPTIC IMAGING SYSTEMS. AUG. 7, 1979. BEL. 820868, CAN. 1005111, FRA. 7434330, GERM 2431770, GRB. 1482703, ITL. 1030694, JAP. 886837.

Class 1C 4A

3,196,008.—ELECTROPC PRCS FOR FRMTN OF FRST LIKE DEFRMTN IMGS IN MECHANICALLY DEFRMBL PHOTOCONDUCTIVE LAYER. JULY 20, 1965. CAN. 0844221.

3,196,011.—ELECTROSTATIC FROSTING. JULY 20, 1965. ARG. 0150575, ATR. 0256625, AUS. 0275848, BEL. 0631983, BRA. 0082433, CAN. 0918226, CHL. 0019655, EIR. 0027268, FIN. 0044982, FRA. 1364101, GER. 1295371, GRB. 1039881, GRK. 0026981, HOL. 0140635, IND. 0087685, ISR. 0019143, ITL. 0695215, LXR. 0043693, MEX. 0102124, NOR. 0118346, NZL. 0134799, PAK. 0114430, PLP. 0003269, PTG. 0040894, SAF. 0001948, SPN. 0292129, STZ. 0425467, SWD. 0315201, TRK. 0011937, UAR. 0004997, VTM. 0000992, VZL. 0014488.

3,213,429.—HIGH SPEED INFORMATION RECORDER. OCT. 19, 1965.

3,258,336.—STRIPPABLE LAYER FROST PRINTING. JUNE 28, 1966. CAN. 0815184.

3,322,034.—FROST COLOR DISPLAY. MAY 30, 1967.

3,329,500.—ELECTROSTATIC FROSTING. JULY 4, 1967.

3,482,969.—FIXING OF DEFORMATION IMAGES. DEC. 9, 1969. CAN. 0801883, FRA. 1399003, GRB. 1061235, ITL. 0726200, SWD. 0315806.

3,485,623.—CONTINUOUS TONE THERMOPLASTIC PHOTOGRAPHY. DEC. 23, 1969. CAN. 0810834, GRB. 1181093, JAP. 0565795.

3,526,879.—INTERNAL FROST RECORDING APPARATUS USING A DEFORMABLE PHOTOCONDUCTOR. SEPT. 1, 1970.

3,542,545.—FROST OR RELIEF WRNKLNG OF AN IMGNG ARTCL COMPRSNG AN ELCTRCLY PHOTSNSTV LAYER AND DEFORMABLE LAY. NOV. 24, 1970. ARG. 0174588, ATR. 0300563, AUS. 0424162, BEL. 0726280, CAN. 0928764, CHL. 0025764, DNK. 0126400, FRA. 1604336, GER. 1817226, GRB. 1234600, GUA. 0002531, ITL. 0864015, JAP. 0693385, LXB. 0057697, MEX. 0107799, NZL. 0154931, PNM. 0001803, PRU. 0010480, SAF. 0688517, SPN. 0362039, STZ. 0518578, SWD. 0354132, URG. 0009690.

3,560,205.—METHOD OF FORMING A PHASE MODULATING HOLOGRAM ON A DEFORMABLE THERMOPLASTIC. FEB. 2, 1971. CAN. 0949793, GRB. 1162853.

3,560,206.—PRODUCTION OF LATENT PERODIC MEMORY PATTERNS IN FROSTABLE FILMS. FEB. 2, 1971.

3,561,958.—INDUCING FROST DEFORMATION IMAGING BY ELECTROLYTIC DEPOSITION. FEB. 9, 1971.

3,672,883.—CRYSTALLINE POLYMERS FOR FROST. JUNE 27, 1972.

3,672,886.—NOVOLAR RESINS IN DEFORMATION IMAGING. JUNE 27, 1972.

3,764,311.—IMAOING SYSTEM. OCT. 9, 1973.

3,819,369.—SURFACE DEFORMABLE IMAGING MEMBER OF IMPROVED DARK DECAY CHARACTERISTICS. JUNE 25, 1974.

3,923,504.—MIGRATION IMAGING MEMBER AND METHOD. DEC. 2, 1975. GRB. 1461872.

3,926,626.—CIRCULATION IMAGING METHOD. DEC. 16, 1975.

4,047,810.—DUAL MODE COPYING MACHINE. SEPT. 13, 1977.

Class 1C 4B

3,238,041.—RELIEF IMAGING OF PHOTORESPONSIVE MEMBER AND PRODUCT. MAR. 1, 1966. CAN. 0850841, GRB. 1043983, MEX. 0080410.

3,321,308.—XEROGRAPHIC INDUCTION RECORDING. MAY 23, 1967. CAN. 0778521, FRA. 1393821, GRB. 1049903, ITL. 0801906, JAP. 0537660.

3,542,545.—FROST OR RELIEF WRNKLNG OF AN IMGNG ARTCL COMPRSNG AN ELCTRCLY PHOTSNSTV LAYER AND DEFORMABLE LAY. NOV. 24, 1970. ARG. 0174588, ATR. 0300563, AUS. 0424162, BEL. 0726280, CAN. 0928764, CHL: 0025764, DNK. 0126400, FRA. 1604336, GER. 1817226, GRB. 1234600, GUA. 0002531, ITL. 0864015, JAP. 0693385, LXB. 0057697, MEX. 0107799, NZL. 0154931, PNM. 0001803, PRU. 0010480, SAF. 0688517, SPN. 0362039, STZ. 0518578, SWD. 0354132, URG. 0009690.

3,615,388.—DEFORMATION IMAGING PROCESS AND ELEMENT. OCT. 26, 1971. CAN. 0941877, MEX. 0101539.

3,923,504.—MIGRATION IMAGING MEMBER AND METHOD. DEC. 2, 1975. GRB 1461872.

3,926,626.—CIRCULATION IMAGING METHOD. DEC. 16, 1975.

Class 1C 5

3,519,818.—METHOD OF PREPARING A NEGATIVE XEROGRAPHIC REPRODUCTION FROM A POSITIVE LINE COPY IMAGE. JULY 7, 1970. CAN. 0829037, GRB. 1191159, JAP. 0589516.

Class 1D

3,318,212.—DUPLEX XEROGRAPHIC REPRODUCTION. MAY 9, 1967.

3,506,347.—DUPLEX XEROGRAPHIC REPRODUCTION APPARATUS. APR. 14, 1970.

3,536,398.—REPRODUCTION APPARATUS. OCT. 27, 1970. AUS. 0442047, BEL. 0737274, CAN. 0899443, EGR. 0091200, FRA. 6927759, GRB. 1246226, ITL. 0883645, SPN. 0370416, STZ. 0500517, SWD. 0356144, TIW. 0005358, USR. 0359871.

3,580,670.—APPARATUS FOR DUPLEXING. MAY 25, 1971. CAN. 0929581.

3,615,129.—DUPLEXING XEROGRAPHIC REPRODUCING MACHINE WITH COPY SHEET REVERSING STATION. OCT. 26, 1971. ARG. 0172601, AUS. 0432830, BEL. 0737341, CAN. 0909853, CZC. 0158650, EGR. 0083299, FRA. 6927784, GRB. 1256767, ITL. 0883644, JAP. 0774495, MEX. 0108784, SPN. 0370415, STZ. 0500518, SWD. 0356143, TIW. 0006822, USR. 0371736, VZL. 0032923.

3,671,118.—APPARATUS FOR CREATING DUPLEX REPRODUCTIONS. JUNE 20, 1972. ARG. 0186265, AUS. 0445064, BEL. 0760746, CAN. 0922768, EGR. 0088254, FRA. 7047143, GRB. 1282808, ITL. 0913849, JAP. 0773214, MEX. 0116655, SPN. 0386707, STZ. 0526137, SWD. 0366403.

3,674,475.—ENCLOSED MIGRATION IMAGING SYSTEM. JULY 4, 1972.

3,694,073.—METHOD FOR DUPLEXING. SEPT. 26, 1972.

3,754,822.—SCANNING SYSTEM. AUG. 28, 1973.

3,844,653.—ROOF MIRROR COPYING SYSTEM. OCT. 29, 1974.

3,844,654.—DUPLEX COPYING SYSTEM. OCT. 29, 1974. FRA. 7340246.

3,847,478.—SEGMENTED BIAS ROLL. NOV. 12, 1974.

3,936,171.—ELECTROSTATOGRAPHIC METHODS AND APPARATUS. FEB. 3, 1976.

3,940,210.—PROGRAMMABLE CONTROLLER FOR CONTROLLING REPRODUCTION MACHINES. FEB. 24, 1976. BEL. 0832356, IRN. 0013436.

3,944,359.—PROGRAMMABLE CONTROLLER FOR CONTROLLING REPRODUCTION MACHINES. MAR. 16, 1976.

4,014,609.—PROGRAMMABLE CONTROLLER FOR CONTROLLING REPRODUCTION MACHINE. MAR. 29, 1977.

4,035,073.—DUPLEX REPRODUCTION MACHINE. JULY 12, 1977, BEL. 0832115, SPN. 0440012.

4,104,726.—PROGRAMMABLE CONTROLLER FOR CONTROLLING REPRODUCTION MACHINES. AUG. 1, 1978.

4,107,779.—PROGRAMMABLE CONTROLLER FOR CONTROLLING REPRODUCTION MACHINES. AUG. 15, 1978.
4,109,313.—PROGRAMMABLE CONTROLLER FOR CONTROLLING REPRODUCTION MACHINES. AUG. 22, 1978.
4,116,558.—DUPLEX SYSTEM AND METHOD FOR PRECOLLATION COPIERS. SEPT. 26, 1978.
4,120,034.—PROGRAMMABLE CONTROLLER FOR CONTROLLING REPRODUCTION MACHINES. OCT. 10, 1978.
4,131,360.—DUPLEX REPRODUCTION SYSTEM EMPLOYING COPY SHEET CLEANER. DEC. 26, 1978.
4,172,655.—SHINGLE SHEET STACKING FOR DUPLEX COPYING. OCT. 30, 1979.

Class 1E

3,227,549.—MULTIPLE IMAGE FORMING XEROGRAPHIC REPRODUCTION PROCESS. JAN. 4, 1966.
3,313,623.—LINE SEQUENTIAL COLOR XEROGRAPHY. APR. 11, 1967. CAN. 0880483, GRB. 1019974.
3,316,805.—COLOR DISPLAY. MAY 2, 1967.
3,357,830.—DYED IMAGE XEROGRAPHY. DEC. 12, 1967. CAN. 0821484, GER. 1277018, GRB. 1016581, ITL. 0679720, JAP. 0477809.
3,373,091.—DATA STORAGE DEVICE AND METHOD. MAR. 12, 1968.
3,386,379.—DUPLICATING WITH COLOR PRODUCING REAGENTS. JUNE 4, 1968. AUS. 0294747, CAN. 0842445, FRA. 1390006, GER. 1249089, GRB. 1043875, ITL. 0801548, JAP. 0611643.
3,468,705.—METHOD OF PREPARING LEAD OXIDE FILMS. SEPT. 23, 1969. CAN. 0806134, FRA. 1501511, GER. 1521942, GRB. 1170428, ITL. 0787638, JAP. 0634868, MEX. 0093335.
3,508,823.—DUPLICATING APPARATUS. APR. 28, 1970.
3,583,806.—DYED IMAGE XEROGRAPHY. JUNE 8, 1971.
3,615,392.—ELECTROPHORETIC REPRODUCTION ORIGINAL CONTAINING BOTH MULTI-COLOR AND LINE AREAS. OCT. 26, 1971.
3,672,887.—ELECTROPHOTOGRAPHIC PROCESS FOR MULTICOLOR REPRODUCTION. JUNE 27, 1972.
3,687,661.—COLOR ELECTROPHOTOGRAPHIC PROCESS. AUG. 29, 1972. CAN. 0932785.
3,690,756.—COLOR XEROGRAPHY. SEPT. 12, 1972. BEL. 0781001, CAN. 0963522, FRA. 7210584, GRB. 1365753, ITL. 0950399.
3,702,483.—COLOR RENDITION METHOD. NOV. 7, 1972. BEL. 0777015, CAN. 0935334, FRA. 7146255, GRB. 1361647, ITL. 0944210.
3,719,482.—IMAGING SYSTEM. MAR. 6, 1973.
3,724,943.—COLOR REPRODUCTION APPARATUS. APR. 3, 1973. CAN. 0946463.
3,734,607.—COLOR REPRODUCTION APPARATUS. MAY 22, 1973. ARG. 0184654, ATR. 0314352, AUS. 0459724, BEL. 0751490, CAN. 0946462, CHL. 0026265, DNK. 0130156, EGR. 0085001, FRA. 7020455, GRB. 1316499, ITL. 0893863, MEX. 0120285, NZL. 0160302, PNM. 0002259, PTG. 0053890, SAF. 0703775, SPN. 0380376, STZ. 0514164, SWD. 0359176.
3,799,668.—COLOR STANDARD AND METHOD OF CALIBRATING A MULTI-COLOR ELECTROPHOTGRAPHIC PRINTING MACHINE. MAR. 26, 1974. BEL. 0812179, SAF. 0741562.
3,799,774.—MULTI COLOR ELECTROPHOTOGRAPHIC MASKING PROCESS. MAR. 26, 1974.
3,805,283.—CHART CREATION APPARATUS. APR. 16, 1974.
3,869,203.—COLOR ELECTROPHOTOGRAPHIC PRINTING MACHINE. MAR. 4, 1975. BEL. 0820041.
3,884,686.—COLOR CORRECTION METHOD. MAY 20, 1975.
3,909,127.—MULTI-COLOR ORIGINAL FOR AN ELECTROPHOTOGRAPHIC PRINTING SYSTEM. SEPT. 30, 1975.
3,914,043.—COLOR ACCENTING COPYING MACHINE. OCT. 21, 1975.
3,936,182.—CONTROL ARRANGEMENT FOR AN ELECTROSTATOGRAPHIC REPRODUCTION APPARATUS. FEB. 3, 1976.
3,944,711.—TRANSPARENCY. MAR. 16, 1976.
3,958,990.—TRANSFERRING TONER TO AN AMINE COATED SHEET. MAY 25, 1976.
3,960,445.—COLOR HIGHLIGHTING ELECTROPHOTOGRAPHIC PRINTING MACHINE. JUNE 1, 1976.
3,963,341.—A COLOR ELECTROPHOTOGRAPHIC PRINTING MACHINE. JUNE 15, 1976.
3,970,042.—COLOR DEVELOPMENT APPARATUS. JULY 20, 1976.
3,999,987.—COLOR REPRODUCTION METHOD. DEC. 28, 1976.
4,013,355.—NOTCH FILTER FOR COLOR TRANSPARENCY COPYING MACHINES. MAR. 22, 1977.
4,014,696.—MULTICOLORED XEROGRAPHIC TRANSPARENCY UTILIZING AN APIPHATIC ESTER COATING. MAR. 29, 1977.
4,027,962.—COLOR TRANSPARENCY REPRODUCING MACHINE. JUNE 7, 1977. BEL. 0830321, IRN. 0013435, SPN. 0437814.
4,040,828.—MULTICOLOR IMAGING METHOD AND IMAGED MEMBER EMPLOYING COMBINATION OF TRANSPARENT TONER AND. AUG. 9, 1977. FRA. 7540219.
4,045,218.—METHOD FOR ELECTROSTATICALLY PRODUCING A COLOR ACCENTED PHOTOCOPY. AUG. 30, 1977.
4,045,219.—METHOD OF REPRODUCING COLOR HIGHLIGHTED DOCUMENTS. AUG. 30, 1977.
4,053,216.—COLOR TRANSPARENCY REPRODUCING MACHINE. OCT. 11, 1977. BEL. 830321, FRA. 7518443, GRB. 1489142, IRN. 13435, SPN. 437814, STZ. 597632.
4,053,217.—COLOR TRANSPARENCY REPRODUCING MACHINE. OCT. 11, 1977. BEL. 830321, FRA. 7518443, GRB. 1489142, IRN. 13435, SPN. 437814, STZ. 597632.
4,058,850.—PROGRAMMABLE CONTROLLER. NOV. 15, 1977.
4,063,810.—COLOR TRANSPARENCY REPRODUCING MACHINE. DEC. 20, 1977. BEL. 830321, FRA. 7518443, GRB. 1489142, IRN. 13435, SPN. 437814, STZ. 597632.
4,063,946.—ELECTROPHOTOGRAPHIC COLOR REPRODUCTION PROCESS EMPLOYING PHOTOCONDUCTIVE MATERIAL WITH DUAL. DEC. 20, 1977.
4,068,938.—ELECTROSTAIC COLOR PRINTING USING DISCRETE POTENTIALS. JAN. 17, 1978. GRB. 1442234.
4,068,939.—COLOR TRANSPARENCY REPRODUCING MACHINE. JAN. 17, 1978. BEL. 830321, FRA. 7518443, GRB. 1489142, IRN. 13435, SPN. 437814, STZ. 597632.
4,072,522.—METHOD OF TREATING PHOTOCONDUCTIVE ZINC OXIDE. FEB. 7, 1978.
4,078,929.—METHOD FOR TWO-COLOR DEVELOPMENT OF A XERIOGRAPHIC CHARGE PATTERN. MAR. 14, 1978.
4,082,443.—SYSTEM FOR SUPERPOSITION OF COLOR SEPARATION IMAGES. APR. 4, 1978.
4,087,168.—CHARGING SYSTEM FOR ELECTROSTATIC REPRODUCTION MACHINE. MAY 2, 1978.
4,097,139.—REPRODUCING MACHINE HAVING INTERCHANGEABLE DEVELOPER HOUSINGS. JUNE 27, 1978.
4,111,542.—COLLATING SYSTEM FOR OPAQUE DOCUMENTS AND SLIDE REPRODUCTIONS. SEPT. 5, 1978.
4,135,927.—MULTICOLOR XEROGRAPHIC PROCESS. JAN. 23, 1979. ARG. 188730, AUS. 459398, BEL. 767360, CAN. 946910, CHL. 26754, DNK. 133524, FRA. 7118951, GRB. 1345391, ITL. 930586, MEX. 121678, PNM. 2395, SPN. 391274, STZ. 530659, SWD. 358245, TIW. 8520, VZL. 32422.
4,188,110.—PHOTOCONDUCTIVE BELT SUPPORTING APPARATUS. FEB. 12, 1980.
4,234,250.—ELECTROPHOTOGRAPHIC PRINTING SYSTEM. NOV. 18, 1980. BEL. 868940.
4,255,040.—POSITIVE OVERLAY ELECTRONIC XEROGRAPHIC PRINTER. MAR. 10, 1981.

Class 1F

3,428,453.—IMAGE FORMING PROCESS UTILIZING XEROGRAPHY-ETCHING PROCESS. FEB. 18, 1969. CAN. 0856722, FRA. 1428775, GRB. 1085151, ITL. 0754825.
3,455,240.—IMAGING SYSTEM. JULY 15, 1969. CAN. 0823599, GER. 1571913, GRB. 1165676, JAP. 0594700.
3,460,476.—IMAGING PROCESS. AUG. 12, 1969. ARG. 0164839, AUS. 0418783, BEL. 0691755, CAN. 0882050, FRA. 1511173, GRB. 1168268, ITL. 0787662, JAP. 0562388, MEX. 0108240, SPN. 0346128, STZ. 0480672, SWD. 0331794, VZL. 0024009.
3,490,368.—PRINTING BY PARTICULATE IMAGES. JAN. 20, 1970. ARG. 0152222, ATR. 0281875, AUS. 0403243, BEL. 0674293, BRA. 0086720, CAN. 0824922, DNK. 0117303, FIN. 0047145, FRA. 1464987, GER. 1496169, GRB. 1128173, GRK. 0031516, HOL. 0145056, ITL. 0750153, JAP. 0547199, MEX. 0101075, NOR. 0130551, SAF. 0656968, SPN. 0321274, STZ. 0446906, SWD. 0355681, VZL. 0023998.
3,549,447.—IMAGING SYSTEM. DEC. 22, 1970.
3,559,570.—METHOD OF PREPARING AND USING A GRAVURE PRINTING PLATE. FEB. 2, 1971. CAN. 0844544, GRB. 1198142.

3,589,290.—RELIEF IMAGING PLATES MADE BY REPETITIVE XEROGRAPHIC PROCESSES. JUNE 29, 1971. CAN. 0896949.
3,615,128.—APPARATUS FOR ELECTROSTATIC PRINTING. OCT. 26, 1971. CAN. 0910956.
3,638,567.—METHOD OF PREPARING AND UTILIZING A GRAVURE PRINTING MASTER. FEB. 1, 1972.
3,806,354.—METHOD OF DEVELOPING ELECTROSTATIC LATENT IMAGES. APR. 23, 1974.
3,884,686.—COLOR CORRECTION METHOD. MAY 20, 1975.
3,919,938.—PERMANENT ELECTROSTATIC MASTER. NOV. 18, 1975.
4,006,267.—COLOR HIGHLIGHTING PROCESS. FEB. 1, 1977.
4,068,588.—PRINTING USING AN ELECTROCHROMIC IMAGE. JAN. 17, 1978.

Class 1G 1

3,185,777.—MAGNETIC RECORDING. MAY 25, 1965.
3,485,621.—RECORDING BY PARTICLE ORIENTATION. DEC. 23, 1969. CAN. 0916777, GRB. 1188982, JAP. 0582501.
3,526,191.—DUPLICATING PROCESS EMPLOYING MAGNETIC DEVELOPER MATERIAL. SEPT. 1, 1970. CAN. 0903830, GRB. 1208307.
3,803,638.—RECORDING SYSTEM USING MAGNETIC CORE MATRIX. APR. 9, 1974.
3,875,576.—ELECTROSTATIC IMAGING SYSTEM WITH MAGNETIC TONER. APR. 1, 1975.
4,160,046.—METHOD OF MAKING AN IMAGING SYSTEM. JULY 3, 1979.

Class 1G 2

3,592,642.—DUPL METH PAPR SHT HTS MELTG PT TONR IMG SIMUL CAUSE TRANSF TNR FRPHOTOCNDCR AND FSG TNR IMG ON PAP. JULY 13, 1971. BEL. 0706852, FRA. 1547828, GRB. 1198306, HUN. 0157321, ITL. 0815498.

Class 1G 3

3,275,436.—METHOD OF IMAGE REPRODUCTION UTILIZING A UNIFORM RELEASABLE SURFACE FILM. SEPT. 27, 1966. AUS. 0296158, CAN. 0811877, FRA. 1371894, GRB. 1033523, ITL. 0702168, JAP. 0508402.
3,438,772.—IMG RPDCTN INVLVNG ELCTROSTC TRSF OF RELESBL DONR FILM FRM PTOCNDTV INSLTNG LAYER TO ADHSV TRS. APR. 15, 1969. CAN. 0838044, GRB. 1124954, JAP. 0542587.
3,446,616.—XEROGRAPHIC IMAGING EMPLOYING A SELECTIVELY REMOVABLE LAYER. MAY 27, 1969.

Class 1G 4

3,166,418.—IMAGE DEVELOPMENT. JAN. 19, 1965. CAN. 0747566, FRA. 1259438, GER. 1190334, GRB. 0952609, JAP. 0418117.
3,619,054.—OIL FILM IMAGING APPARATUS. NOV. 9, 1971.

Class 1G 5

3,234,019.—METHOD FOR FORMATION OF AN ELECTROSTATIC IMAGE RESISTANT TO DETERIORATION ON STORAGE. FEB. 8, 1966. ATR. 0248873, AUS. 0266424, BEL. 0618720, FRA. 1325903, GER. 1295374, GRB. 1006231, IND. 0081730, ISR. 0017057, ITL. 0667262, SAF. 0001489, STZ. 0407176, SWD. 0307733.

Class 1G 6

3,869,896.—ROLLING PROCESS. MAR. 11, 1975. GRB. 1434131.
3,924,945.—APPARATUS FOR INDUCTIVE IMAGING WITH SIMULTANEOUS POLAR INK DEVELOPMENT. DEC. 9, 1975.
3,974,534.—QUANDRANGULAR TRIPETICORD GRAVURE ROLL. AUG. 17, 1976.
3,980,404.—XEROGRAPHIC APPARATUS HAVING IMPROVED FLUID DISPENSING MEMBER. SEPT. 14, 1976.
3,994,726.—LAMINATED FLEXIBLE PHOTORECEPTOR. NOV. 30, 1976. GRB. 1429517.
4,002,476.—METHOD OF DEVELOPING RESILIENT PHOTOCONDUCTIVE ELEMENT. JAN. 11, 1977. GRB. 1429517.
4,017,174.—DEVELOPER ASSEMBLY SUPPORT. APR. 12, 1977.
4,020,788.—DOCTORING MEANS. MAY 3, 1977.
4,023,967.—ELECTROPHOTOGRAPHIC LIQUID DEVELOPMENT METHOD IN WHICH A UNIFORM SUBSTANTIAL INTERFACE CONTACT. MAY 17, 1977. BEL. 0819537.
4,024,838.—DEVELOPER LIQUID SUPPLY DEVICE. MAY 24, 1977.

Class 1H 1

3,166,419.—IMAGE PROJECTION. JAN. 19, 1965. CAN. 0699802, FRA. 1260843, GRB. 0955994.
3,166,420.—SIMULTANEOUS IMAGE FORMATION. JAN. 19, 1965. CAN. 0756267, GRB. 0955142.
3,185,050.—XEROGRAPHIC IMAGE PROCESSOR PROJECTOR. MAY 25, 1965.
3,196,765.—IMAGE DEVELOPMENT AND PROJECTION. JULY 27, 1965.
3,220,012.—SIMULTANEOUS RECORDING AND DISPLAY SYSTEM. NOV. 23, 1965. CAN. 0809339, FRA. 1373673, GER. 1303156, GRB. 1019900, ITL. 0695895, JAP. 0470425.
3,317,317.—XEROGRAPHIC METHOD OF MAKING A PARTICLE TRANSPARENCY PROJECTIBLE IMAGE. MAY 2, 1967.
3,320,061.—MASKING BY TOTAL INTERNAL REFLECTION FOR IMAGE REPRODUCTION AND DISPLAY. MAY 16, 1967. CAN. 0847533, FRA. 1401615, GER. 1497081, GRB. 1065986, ITL. 0729029, JAP. 0471308.
3,343,142.—XEROGRAPHIC CODING AND INFORMATION STORAGE ON A SPECULAR BUSINESS MACHINE CARD. SEPT. 19, 1967. CAN. 0844786, GRB. 1047261, JAP. 0701182.
3,519,344.—IMAGE PROJECTION. JULY 7, 1970.
3,543,031.—DEVICE AND PROCESS FOR IMAGE STORAGE. NOV. 24, 1970. ARG. 0161299, AUS. 0432468, BEL. 0703461, CAN. 0862332, FRA. 1543309, GER. 1549142, GRB. 1201374, ITL. 0811521, JAP. 0742514, MEX. 0100142, SPN. 0344004, STZ. 0497022, SWD. 0354169, VZL. 0023663.
3,593,832.—KEYBOARD INPUT DISPLAY DEVICE. JULY 20, 1971.
3,619,049.—XEROGRAPHIC IMAGERY USING A LONG PERSISTENCE PHOSPHOR INTERMEDIATE. NOV. 9. 1971.
3,955,977.—ELECTROSTATOGRAPHIC PROCESS. MAY 11, 1976.

Class 1H 2

3,437,408.—MULTIPLE COPY ELECTROSTATIC IMAGING APPARATUS. APR. 8, 1969. ARG. 0164840, ATR. 0283115, AUS. 0410817, BEL. 0704323, CAN. 0831674, CZC. 0156411, EGR. 0065587, FRA. 1538197, GRB. 1202583, HUN. 0161168, ITL. 0822157, JAP. 0582502, MEX. 0099950, SPN. 0345482, STZ. 0484459, SWD. 0331795, USR. 0353450, VZL. 0023662.
3,512,038.—PIN SYSTEM. MAY 12, 1970. CAN. 0873507, GRB. 1201497, JAP. 0623001.

Class 1I

3,414,409.—PARTICLE TRANSFER. DEC. 3, 1968. BEL. 0713399, CAN. 0822324, FRA. 1568374, GRB. 1145026, ITL. 0829803.
3,543,022.—METH AND APPARATUS CHARG DISCRETE SMALL AREAS XEROGRAPHIC PLATES TO DIF POTENT CONT TONE PRINTG. NOV. 24, 1970. CAN. 0921971, GRB. 1186599.
3,682,677.—BACKGROUND REMOVAL. AUG. 8, 1972.
3,784,301.—ELECTROPHOTOGRAPHIC METHOD. JAN. 8, 1974.
3,883,349.—ELECTROPHOTOGRAPHIC CHARGING METHOD. MAY 13, 1975.
3,973,846.—ELECTROSTATIC MASTER MAKING APPARATUS. AUG. 10, 1976.
4,021,112.—PHOTORECEPTOR DARK CURRENT LEAKAGE DETECTING APP FOP XEROGRAPHIC MACHINES. May 3, 1977.
4,039,831.—TWO COLOR XERORADIOGRAPHY DEVELOPMENT. AUG. 2, 1977.
4,134,137.—SINGLE WIRE MICROELECTROMETER IMAGING SYSTEM. JAN. 9, 1979.
4,245,258.—METHOD AND APPARATUS FOR REDUCTION OF FALSE CONTOURS IN ELECTRICALLY SCREENED IMAGES. JAN. 13, 1981.
4,246,614.—BINARY GRAPHIC PRINTER SYSTEM HAVING AN ELECTRONIC SCREEN WITH SHIFT CONTROL SUITED FOR RESCREENING. JAN. 20, 1981.

Class 1J

3,652,156.—LINEAR-TO-DRUM OPTICAL SCAN CONVERTER SYSTEM. MAR. 28, 1972.
3,766,850.—DEVELOPING MEANS FOR ELECTROSTATIC PRINTING APPARATUS. OCT. 23, 1973. CAN. 0972551, FRA. 7246855, GRB. 1415325, ITL. 0973310, SWC. 7216975.
3,954,463.—METHOD FOR ELECTROSTATIC PRINTING. MAY 4, 1976.
4,046,472.—ELECTROSTATIC IMAGING APPARATUS. SEPT. 6, 1977.
4,103,995.—IMAGING APPARATUS. AUG. 1, 1978.
4,174,903.—COMBINED PROCESSING STATION FOR USE IN AN ELECTROPHOTOGRAPHIC PRINTING MACHINE. NOV. 20, 1979.

Class 1J 1

3,182,573.—MASKED PLATE XEROGRAPHY. MAY 11, 1965. CAN. 0859657, FRA. 1353685, GRB. 1021882, ITL. 0694073, JAP. 0470242.
3,205,484.—ELECTROSTATIC MEMORY SYSTEM. SEPT. 7, 1965.
3,355,983.—CARD HANDLING MECHANISM. DEC. 5, 1967. CAN. 0814086, MEX. 0113373.
3,514,201.—RECORDING APPARATUS. MAY 26, 1970. CAN. 0880484.
3,520,602.—GRAPHIC DISPLAY DEVICE. JULY 14, 1970. CAN. 0838312.
3,536,395.—TRANSACTION RECORDING APPARATUS AND SYSTEM. OCT. 27, 1970. CAN. 0870184, GRB. 1213825.
3,580,671.—EXPOSURE APPARATUS. MAY 25, 1971. CAN. 0912104, GRB. 1276010.
3,677,633.—PORTABLE DOCUMENT ABSTRACTOR. JULY 18, 1972.
3,770,430.—PHOTOELECTROSCLOGRAPHIC IMAGING PROCESS. NOV. 6, 1973.
3,865,482.—ELECTROSTATOGRAPHIC COPYING MACHINE. FEB. 11, 1975.
3,917,396.—CONTROL SYSTEM. NOV. 4, 1975.
3,955,977.—ELECTROSTATOGRAPHIC PROCESS. MAY 11, 1976.
3,976,374.—ELIMINATION OF REDUNDANT IMAGE. AUG. 24, 1976. GRB. 1419725.
3,977,780.—ELECTROSTATIC REPRODUCTION METHOD AND APPARATUS. AUG. 31, 1976.
RE29,514.—PROGRAMMING CONTROL SYSTEM FOR PRINTING MACHINE. JAN. 10, 1978.
4,046,472.—ELECTROSTATIC IMAGING APPARATUS. SEPT. 6, 1977.
4,054,380.—CONTROL SYSTEM FOR HIGH SPEED COPIER/DUPLICATORS. OCT. 18, 1977. GRB. 1491911.
4,093,367.—IMAGING APPARATUS. JUNE 6, 1978.
4,103,995.—IMAGING APPARATUS. AUG. 1, 1978.
4,122,996.—COPY REPRODUCTION MACHINE WITH CONTROLLER SELF CHECK SYSTEM. OCT. 31, 1978.
4,124,287.—IMAGING SYSTEM UTILIZING UNCHARGED MARKING PARTICLES. NOV. 7, 1978.
4,125,325.—AUTOMATIC DUPLEX CONTROL SYSTEM FOR A REPRODUCTION MACHINE. NOV. 14, 1978. BEL. 870043.
4,130,354.—REPRODUCTION MACHINE HAVING DUPLEX JOB RECOVERY CAPABILITIES. DEC. 19, 1978. BEL. 870038.
4,149,487.—XEROGRAPHIC MACHINE WITH INFINITELY VARIABLE DEVELOPER BIAS. APR. 17, 1979.
4,153,241.—DOUBLE DOCUMENT FEED DETECTION FOR A DOCUMENT HANDLER IN A REPRODUCTION MACHINE. MAY 8, 1979. BEL. 870041.
4,156,133.—REPRODUCTION MACHINE WITH PAPER PATH DETECTION DIAGNOSTICS. MAY 22, 1979. BEL. 870040.
4,158,886.—OPERATOR CONSOLE FOR A REPRODUCTION MACHINE. JUNE 19, 1979. BEL. 870041.
4,161,277.—IMPROPER COPY RUN PROGRAM ENTRY CHECK FOR ELECTROSTATIC TYPE REPRODUCTION OR COPYING MACHINE. JULY 17, 1979.
4,162,844.—REPRODUCTION MACHINE WITH DUPLEX IMAGE SHIFT. JULY 31, 1979. BEL. 870037.
4,165,170.—CONTROL SYSTEM. AUG. 21, 1979.
4,181,429.—SAMPLE COPY SYSTEM FOR XEROGRAPHIC REPRODUCTION MACHINE. JAN. 1, 1980.
4,186,299.—REPRODUCTION MACHINE WITH DIFFERENT OPERATING PROGRAMS. JAN. 29, 1980. BEL. 870041.
4,196,476.—REPRODUCTION MACHINE WITH SELECTIVELY DISCLOSABLE PROGRAMS. APR. 1, 1980. BEL. 870039.
4,198,680.—CONTROL SYSTEM FOR ELECTROSTATIC TYPE COPY REPRODUCING MACHINES. APR. 15, 1980.
4,204,670.—SORTER FOR A REPRODUCTION MACHINE. MAY 27, 1980. BEL. 870044.
4,206,995.—REPRODUCTION MACHINE WITH ON BOARD DOCUMENT HANDLER DIAGNOSTICS. JUNE 10, 1980. BEL. 870041.
4,266,294.—COPY REPRODUCTION MACHINE WITH CONTROLLER SELF CHECK SYSTEM. MAY 5, 1981. BEL. 870036.

Class 1J 1A

4,183,089.—DATA COMMUNICATIONS SYSTEM. JAN. 8, 1980.
4,190,350.—DISTRIBUTED MICROPROCESSOR CONTROL SYSTEM FOR A COPIER/DUPLICATOR. FEB. 26, 1980.
4,248,528.—COPIER WITH DOCUMENT SENSING CONTROL. FEB. 3, 1981.

Class 1J 2

3,185,051.—XEROGRAPHIC METHOD. MAY 25, 1965. CAN. 0740113, FRA. 1385444, GRB. 1026557, ITL. 0712017.
3,237,197.—IMAGE METHOD FOR ELECTROSTATIC RETENTION IN PHOTOCONDUCTIVE LAYERS. FEB. 22, 1966.

Class 1J 3

3,649,114.—MULTIPLE OUTPUT ELECTROSTATIC RECORDING SYSTEM. MAR. 14, 1972. ARG. 0200567, AUS. 0447901, CAN. 0923542, NZL. 0160104.

Class 1J 4

3,187,651.—XEROGRAPHIC REPRODUCING APPARATUS. JUNE 8, 1965. FRA. 1338861, GER. 1797533, GRB. 1015633, HGK. 0013368, JAP. 0441423, KEN. 0167368.
3,196,767.—DOCUMENT COPY MECHANISM. JULY 27, 1965. CAN. 0731929, GRB. 1032953, JAP. 0651995.
3,399,610.—XEROGRAPHIC APPARATUS. SEPT. 3, 1968. CAN. 0819923.
3,788,203.—JUSTIFICATION APPARATUS. JAN. 29, 1974. CAN. 0989929, GRB. 1380831.
3,982,831.—ELECTROSTATOGRAPHIC REPRODUCTION APP & DRIVE THEREFOR. SEPT. 28, 1976.
4,002,409.—CHAIN-FEED CONTROL LOGIC FOR A MULTI-MODE COPIER/DUPLICATOR. JAN. 11, 1977. BEL. 0840300.
4,027,963.—MULTI-MODE REPRODUCING APPARATUS. JUNE 7, 1977. BEL. 0843154, HAT. 0001534.
4,053,221.—MULTI-MODE REPRODUCING APPARATUS. OCT. 11, 1977.

Class 1J 5

3,160,057.—XEROGRAPHIC PROCESSING APPARATUS. DEC. 8, 1964.
3,272,101.—XEROGRAPHIC APPARATUS. SEPT. 13, 1966.
3,520,605.—DOCUMENT SCAN DRIVE AND RETURN APPARATUS. JULY 14, 1970. CAN. 0858848.
3,697,160.—CONTINUOUS IMAGING APPARATUS. OCT. 10, 1972.

Class 1J 6

RE.27,776.—ROLLER ASSEMBLY FR BELT-TYPE PHOTORECEPTR IN ELECTROSTATC PRNTNG MACHINES—RE OF D1480—3,536. OCT. 9, 1973.
3,190,199.—XEROGRAPHIC COPYING APPARATUS. JUNE 22, 1965. CAN. 0709970, GRB. 1033834, JAP. 0477813.
3,435,693.—BELT TRACKING DEVICE. APR. 1, 1969. ARG. 0168295, ATR. 0283116, AUS. 0421893, BEL. 0705641, CAN. 0853440, CHL. 0023084, CLB. 0017528, DNK. 0117047, FRA. 1543079, GRB. 1180659, ITL. 0827782, MEX. 0100320, NOR. 0124530, PRU. 0009336, SAF. 0676414, SPN. 0346430, STZ. 0471736, URG. 0009729, VZL. 0023676.
3,536,323.—BELT ASSEMBLY—REISSUED D3492—27,776. OCT. 27, 1970. ARG. 0181307, AUS. 0437364, BEL. 0733405, BRA. 6909127, CAN. 0943179, FRA. 6917082, GRB. 1275135, HUN. 0157763, ITL. 0869475, JAP. 0700616, MEX. 0112302, PNM. 0001817, SPN. 0367615, STZ. 0506819, TIW. 0UM5646, USR. 0406385, VZL. 0025831.
3,661,452.—XEROGRAPHIC REPRODUCTION MACHINE. MAY 9, 1972. ARG. 0169621, AUS. 0442749, BEL. 0733407, CAN. 0910959, CHL. 0024800, DNK. 0125257, FRA. 6917084, GRB. 1264406, ITL. 0877771, MEX. 0115542, PNM. 0001759, PRU. 0010640, SPN. 0367613, STZ. 0491418, TIW. 0006498, USR. 0358875, VZL. 0026279.

3,664,204.—BELT ASSEMBLY FOR USE IN AN ELECTROSTATIC PRINTING MACHINE. MAY 23, 1972. ARG. 0193980, BEL. 0777322, CAN. 0939735, FRA. 7147893, GRB. 1372389, ITL. 0944437, MEX. 0128274, VZL. 0032791.
3,730,623.—VACUUM HOLDDOWN DEVICE FOR MOVING BELTS. MAY 1, 1973. ARG. 0191239, BEL. 0777323, CAN. 0940591, FRA. 7147894, GRB. 1372390, ITL. 0944436, MEX. 0127634.
3,765,757.—TRANSPORT ARRANGEMENT FOR THIN SHEET MATERIAL. OCT. 16, 1973. BEL. 0793551, GRB. 1419978, ITL. 0972846, SPN. 0410107.
3,790,271.—PROCESSING CONTROL SYSTEM FOR PRINTING MACHINES. FEB. 5, 1974. CAN. 0986173, SPN. 0418256.
3,801,092.—VACUUM HOLD-DOWN DEVICE FOR MOVING BELTS. APR. 2, 1974. ARG. 0191239, BEL. 0777323, CAN. 0940591, FRA. 7147894, GRB. 1372390, ITL. 0944436, MEX. 0127634.
3,860,340.—OPTICAL ALIGNMENT ON VACUUM PLENUM. JAN. 14, 1975. BEL. 0784630, FRA. 7220686, GRB. 1379674, ITL. 0956164.
3,867,027.—TRANSPORT ARRANGEMENT FOR THIN SHEET MATERIAL. FEB. 18, 1975. BEL. 0793551, GRB. 1419978, ITL, 0972846, SPN. 0410107.
3,907,650.—PHOTOSENSITIVE BINDER LAYER FOR XEROGRAPHY. SEPT. 23, 1975.
3,914,126.—NICKEL OXIDE INTERLAYERS FOR PHOTOCONDUCTIVE ELEMENTS. OCT. 21, 1975.
3,921,179.—FLUID PEN ASSEMBLY. NOV. 18, 1975.
3,961,849.—ELECTROSTATIC PRINTING MACHINE. JUNE 8, 1976. ARG. 0200108, ATR. 0323556, AUS. 0458405, BEL. 0776599, CAN. 0948274, FRA. 7145342, GRB. 1374799, ITL. 0943875, MEX. 0127493, PNM. 0718307, SAF. 0718307, SPN. 0397851, STZ. 0554009, SWD. 7115731, VZL. 0032936.
4,094,606.—XEROGRAPHIC SYSTEM EMPLOYING WAVEGUIDE ADDRESSING AND MODULATING APPARATUS. JUNE 13, 1978.

Class 1J 7

3,512,885.—ACCOUNTING DEVICE FOR XEROGRAPHIC REPRODUCING APPARATUS. MAY 19, 1970. ARG. 0152214, ATR. 0285324, AUS. 0409894, BEL. 0670170, BRA. 0086686, CAN. 0763624, CHL. 0022095, CLB. 0015661, COS. 0001881, DNK. 0125559, ECD. 0000019, EGR. 0050203, EIR. 0029756, ELS. 0000939, FRA. 1459931, GER. 1522804, GRB. 1122622, GRK. 0030861, GUA. 0001741, HOL. 0146300, IND. 0096570, ISR. 0024363, ITL. 0729658, JAP. 0513607, LXB. 0049537, MEX. 0079047, NOR. 0124392, NZL. 0142991, PAK. 0116058, PLP. 0005074, PNM. 0002079, PRU. 0008106, PTG. 0044651, SAF. 0655276, SPN. 0318011, STZ. 0438031, SWD. 0358037, TRK. 0013473, UAR. 0007497, URG. 0006622, VZL. 0023997.
3,588,472.—LOGIC CONTROL APPARATUS. JUNE 28, 1971. ARG. 0181590. ATR. 0279353, BEL. 0706629, BRA. 6793350, CAN. 0834957, FRA. 1567082, GRB. 1204719, ITL. 0815466, JAP. 0645591, LXB. 0054882, MEX. 0101675, VZL. 0023684.
3,734,610.—MICROFICHE VIEWER-COPIER WITH BILLING DATA STORAGE. MAY 22, 1973.
3,813,157.—CONTROL LOGIC FOR TROUBLE DETECTION AND RECOVERY. MAY 28, 1974.

Class 1J 8

3,301,152.—XEROGRAPHIC COPYING APPARATUS. JAN. 31, 1967.
3,348,521.—AUTOMATIC TONER CONTROL SYSTEM. OCT. 24, 1967. CAN. 0799398.
3,453,045.—XEROGRAPHIC DEVELOPMENT APPARATUS. JULY 1, 1969. CAN. 0852125, FRA. 1559973, GRB. 1213493, HUN. 0156188, ITL. 0832847, JAP. 0602169, USR. 0371739.
3,542,466.—DEVELOPMENT APPARATUS. NOV. 24, 1970. AUS. 0428620, BEL. 0725611, CAN. 0884213, FRA. 1598505, GRB. 1203167, ITL. 0870661, JAP. 0641479, SPN. 0361653, SWD. 0343694.
3,695,224.—CASCADE DEVELOPMENT. OCT. 3, 1972.
3,816,756.—AUTOMATIC BIAS CONTROL. JUNE 11, 1974.
3,851,966.—REPRODUCTION APPARATUS. DEC. 3, 1974. BEL. 808482.
3,869,896.—ROLLING PROCESS. MAR. 11, 1975. GRB. 1434131.
3,931,792.—ABRASIVE LIQUID DEVELOPING APPARATUS. JAN. 13, 1976.
3,994,726.—LAMINATED FLEXIBLE PHOTORECEPTOR. GRB. 1429517.
4,002,476.—METHOD OF DEVELOPING RESILIENT PHOTOCONDUCTIVE ELEMENT. JAN. 11,, 1977. GRB. 1429517.
4,023,967.—ELECTROPHOTOGRAPHIC LIQUID DEVELOPMENT METHOD IN WHICH A UNIFORM SUBSTANTIAL INTERFACE CONTACT. BEL. 0819537, GRB. 1429518.

Class 1K

T.940,022.—PRESSURIZED AND FILTERED XEROGRAPHIC SYSTEM. NOV. 4, 1975.
3,638,110.—DEVC FOR MEASRNG CHRG ON MATRIAL BY CONVRTNG INTO ELCTRCL SGNLS FRICTNL FORCS CAUSD BY CHARGE. JAN. 25, 1972. AUS. 0161306, BEL. 0746479, FRA. 7007991, GRB. 1280803, HUN. 0161306, ITL. 0892329, JAP. 0681943, PLD. 0069581, SPN. 0376910, STZ. 0519185, SWD. 0364418, USR. 0412696.
3,661,453.—ELECTROSTATIC LABEL PRINTER. MAY 9, 1972. CAN. 0927471, FRA. 7122950, GRB. 1345800, ITL. 0927543.
3,893,175.—RECORDER FOR MONITORING COPIERS. JULY 1, 1975. GRB. 1427292.
4,007,326.—ELECTRONIC COPY ANALYSIS. FEB. 8, 1977.
4,016,310.—COATR HRDWR & METH FOR OBTNG UNFRM PHROCNDTV LAYR ON A XEROGRAPHIC PHOTORECEPTOR. APR. 5, 1977.
4,023,523.—COATING HARDWARE AND METHOD FOR OBTAINING UNIFORM PHOTOCONDUCTIVE LAYERS ON A XEROGRAPHIC PHOTO. MAY 17, 1977.
4,023,901.—REPRODUCTION MACHINE SERVICE CONTROL. MAY 17, 1977.
4,025,188.—PHOTOACTIVE DEVICE FOR XEROGRAPHY. MAY 24, 1977.
4,026,397.—CONTROL KNOB CLUTCHES WITH LOCK. MAY 31, 1977.
4,134,137.—SINGLE WIRE MICROELECTROMETER IMAGING SYSTEM. JAN. 9, 1979.

Class 1K 1

3,835,380.—ELECTROMETER SYSTEM. SEPT. 10, 1974.
3,852,668.—ELECTROMETER SYSTEM. DEC. 3, 1974.
3,887,845.—COPIER PHOTORECEPTOR CHARGE CONTROL. JUNE 3, 1975. GRB. 1465969.
3,891,316.—MULTI-PROCESS CONTROL SYSTEM FOR AN ELECTROPHOTOGRAPHIC PRINTING MACHINE. JUNE 24, 1975.
3,898,001.—ELCTROMETR SYSTM FOR NON-CNTCT DETCTN OF ELCTRSTATC CHRGE ON A MVNG ELCTRSTGRPHC IMAGNG SURFACE. AUG. 5, 1975.
3,909,126.—MULTI-PROCESS CONTROL SYSTEM FOR AN ELECTROPHOTOGRAPHIC PRINTING MACHINE. SEPT. 30, 1975.
3,934,141.—APPARATUS FOR AUTOMATICALLY REGULATING THE AMOUNT OF CHARGE APPLIED TO AN INSULATING SURFACE. JAN. 20, 1976.
3,935,531.—ELECTROMETER WITH LOW VOLTAGE INDICATOR. JAN. 27, 1976.
3,935,532.—AUTOMATIC ZEROING ELECTROMETER. JAN. 27, 1976.
3,998,538.—ELECTROMETER APPARATUS FOR REPRODUCTION MACHINES. DEC. 21, 1976.
4,000,944.—PHOTORECEPTOR FOR ELECTROSTATIC REPRODUCTION MACHINES WITH BUILT IN ELECTRODE. JAN. 4, 1977.
4,003,650.—CONTROLLER FOR REPRODUCTION APPARATUS. JAN. 18, 1977.
4,100,484.—D.C. ELECTROMETER. JULY 11, 1978.
4,105,321.—ILLUMINATED CHARGE CONTROL SYSTEM FOR XEROGRAPHIC MACHINES. AUG. 8, 1978.
4,127,806.—SHIELDED ELECTROMETER WHOSE OUTPUT IS USED TO CONTROL WIDTH OF PULSES FED BACK TO THE SHIELD. NOV. 28, 1978.
4,139,813.—ADAPTOR FOR AN ELECTROMETER PROBE TO PERMIT CONTACT POTENTIAL MEASUREMENTS AND METHOD FOR USE. FEB. 13, 1979.
4,149,119.—COMBINED AC-DC ELECTROMETER WITH AC FEEDBACK FOR DRIFT COMPENSATION. APR. 10, 1979.
4,248,519.—CHARGE CONTROL SYSTEM FOR XEROGRAPHIC MACHINES. FEB. 3, 1981.

Class 1K 2

3,335,003.—REFLEX XEROGRAPHIC PROCESS. AUG. 8, 1967. CAN. 0764912, FRA. 1415836, GER. 1261398, GRB. 1059657, ITL. 0741353, JAP. 0511404.
3,337,339.—SCREEN XEROGRAPHY. AUG. 22, 1967. AUS. 0291558, BEL. 0638029, CAN. 0729824, DNK. 0114045, FRA. 1404424, GER. 0114045, GRB. 1027354, HOL. 0130250, ITL. 0706191, JAP. 0489562, LXB. 0044538, NOR. 0109228, SWD. 0321859.
3,676,118.—REFLEX XEROGRAPHY IMAGING SYSTEM. JULY 11, 1972.
4,063,154.—D.C. ELECTROMETER. DEC. 13, 1977.
4,063,155.—D.C. ELECTROMETER PROBE. DEC. 13, 1977.
4,106,869.—DISTANCE COMPENSATED ELECTROSTATIC VOLTMETER. AUG. 15, 1978.

Class 1K 3

3,926,626.—CIRCULATION IMAGING METHOD. DEC. 16, 1975.

Class 2

4,043,549.—IMPACT FEEDER AUG. 23, 1977.
4,059,353.—PHOTORECEPTOR BELT SYSTEM. NOV. 22, 1977.
4,192,989.—BLANKET HEATED PHOTORECEPTOR. MAR. 11, 1980.

Class 2A

3,856,461.—REPRODUCTION MACHINE FUSER. DEC. 24, 1974.
3,856,462.—REPRODUCTION MACHINE FUSER. DEC. 24, 1974. BEL. 0821050.
3,877,936.—PHOTOCONDUCTIVE COPOLYMER OF N-VINYLCARBAZOLF AND N-VINYLPHTHALIMIDE. APR. 15, 1975. BEL. 0812436.
3,883,921.—CLEANING ROLL APPARATUS HAVING REJUVENATED CLEANING SURFACE. MAY 20, 1975.
3,944,358.—COLOR IMAGE REPRODUCTION SYSTEMS. MAR. 16, 1976.
3,951,533.—COLOR IMAGE REPRODUCTION SYSTEM. APR. 20, 1976.
3,984,183.—SHEET STRIPPING FROM IMAGING SURFACE. OCT. 5, 1976. BEL. 0836791.
3,997,243.—COLOR IMAGE REPRODUCTION SYSTEM. DEC. 14, 1976.
4,004,549.—ROLL FUSER. JAN. 25, 1977.
4,022,956.—POLYMERS OF BENZANTHRACENE AS ACTIVE MATRIX MATERIALS. MAY 10, 1977.
4,027,138.—A FUSER RELEASE MATERIAL DISPENSER. MAY 31, 1977.
4,035,140.—FIXING DEVICE IN AN ELECTROPHOTOGRAPHIC COPYING MACHINE. JULY 12, 1977.
4,045,163.—HEATED FUSER RELEASE AGENT CONTAINER. AUG. 30, 1977.
4,060,105.—TONER LOADING APPARATUS WITH REPLENISHING SUPPLY CONTAINER. NOV. 29, 1977.
4,063,530.—IMAGE FIXING. DEC. 20, 1977.
4,072,522.—METHOD OF TREATING PHOTOCONDUCTIVE ZINC OXIDE. FEB. 7, 1978.
4,078,924.—IMAGING SURFACE SMOOTHING WITH ROUGHENED FOIL NICKEL. MAR. 14, 1978.
4,172,721.—DYE-AMPLIFIED IMAGING PROCESS. OCT. 30, 1979. AUS. 494739, BEL. 822400, CAN. 1033041, FRA. 7438506, GER. 7438730, GRB. 1484706, ITL. 1025877, SPN. 432205, SWD. 74144650.
4,233,383.—TRIGONAL SELENIUM PHOTOCONDUCTIVE ELEMENT. NOV. 11, 1980.

Class 2A 1

3,764,315.—AMBIPOLAR ELECTROPHOTOGRAPHIC PLATE. OCT. 9, 1973. BEL. 0802608, GRB. 1421948.
3,948,656.—IMPROVED METHOD FOR THE PREPARATION OF CDSSE. APR. 6, 1976.

Class 2A 1A

3,170,790.—RED SENSITIVE XEROGRAPHIC PLATE AND PROCESS THEREFOR. FEB. 23, 1965.
3,174,855.—METHOD FOR A PRODUCTION OF A XEROGRAPHIC PLATE. MAR. 23, 1965.
3,234,020.—PLATE FOR ELECTROSTATIC ELECTROPHOTOGRAPHY. FEB. 8, 1966.
3,460,296.—METAL WORKING. AUG. 12, 1969. BEL. 0705574, CAN. 0853918, GRB. 1196684.
3,488,896.—PROCESS OF PUMICING A SURFACE. JAN. 13, 1970.
3,489,560.—PHOTOCONDUCTIVE LAYR COMPRISN SELENIUM COMPOUND AND SOLID HYDROPHOBIC METL SALT OF A FATTY ACID. JAN. 13, 1970. BEL. 0711297, CAN. 0871632, FRA. 1544448, GRB. 1203237.
3,517,995.—METHOD & APPARATUS FOR INCREASING THE EFFICIENCY OF CORONA CHARGNG. JUNE 30, 1970. ARG. 0172471, BEL. 0721553, CAN. 0856714, FRA. 1585283, GRB. 1247034, ITL. 0844214, JAP. 0708414, MEX. 0103113, VZL. 0023701.
3,552,848.—XEROGRAPHIC PLATE. JAN. 5, 1971.
3,621,248.—METHOD USING XERORADIOGRAPHIC PLATE INSENSITIVE TO VISIBLE LIGHT. NOV. 16, 1971.
3,954,464.—METHOD OF FABRICATINO A COMPOSITE TRIGONAL SELENIUM PHOTORECEPTOR. MAY 4, 1976.
3,961,953.—METHOD OF FABRICATING COMPOSITES TRIGONAL SELENIUM PHOTORECEPTORS. JUNE 8, 1976.
4,007,255.—PREPARATION OF RED AMORPHOUS SELENIUM. FEB. 8, 1977.
4,009,249.—PREPARATION OF RED AMORPHOUS SELENIUM. FEB. 22, 1977.
4,019,014.—METHOD FOR HEAT WELDING SELENIUM. APR. 19, 1977.

Class 2A 1B

3,312,548.—XEROGRAPHIC PLATES. APR. 4, 1967. BEL. 0691217, CAN. 0819658, FRA. 1505803, GRB. 1165579, JAP. 0650232.
3,467,548.—METHOD OF MAKING XEROGRAPHIC PLATE BY VACUUM EVAPORATION OF SELENIUM ALLOY. SEPT. 16, 1969.
3,490,903.—ALLOYS OF ANTIMONY AND SELENIUM USED IN PHOTOCONDUCTIVE ELEMENTS. JAN. 20, 1970. AUS. 0412949, CAN. 0871074, FRA. 1533536, GRB. 1185389, ITL. 0805955, JAP. 0626127, SWD. 0318193.
3,511,649.—PROCESS OF REDUCING FATIGUE IN PHOTOCONDUCTIVE GLASSES. MAY 12, 1970. GRB. 1193472, JAP. 0604152.
3,524,745.—PHOTOCONDUCTIVE ALLOY OF ARSENIC ANTIMONY AND SELENIUM. AUG. 18, 1970. ARG. 0164055, AUS. 0410443, BEL. 0709132, CAN. 0884810, CHL. 0024255, FRA. 1550902, GRB. 1209971, IND. 0113988, ITL. 0833508, JAP. 9124370, LXB. 0055231, MEX. 0108993, NOR. 0127943, NZL. 0151243, PRU. 0009904, PTG. 0048919, SAF. 0680228, SPN. 0349235, STZ. 0495573, SWD. 0328189, URG. 0009683.
3,615,413.—INDIUM DOPING OF A SE-AS PHOTOCONDUCTIVE ALLOYS. OCT. 26, 1971. CAN. 0917981, GRB. 1309312, JAP. 0739528.
3,655,377.—TRI-LAYERED SELENIUM DOPED PHOTORECEPTOR. APR. 11, 1972.
3,660,086.—ELCTRPHTGRPC PLATE AND PROCS EMPLYNG INORGNC PHOTCNDCTV MATRL W/PHOTOCHROMIC SENSITIVE AGENT. MAY 2, 1972.
3,685,989.—AMBIPOLAR PHOTORECEPTOR AND METHOD OF IMAGING. AUG. 22, 1972. CAN. 0971800, GRB. 1360078.
3,697,265.—VTRS SELNUM ALLY MTRX CNTNING ISLTD PRTCLS/PRTCL NETWKS OF RSN. OCT. 10, 1972. ARG. 0183560, ATR. 0299699, AUS. 0449439; BEL. 0752439, CAN. 0933014, EGR. 0090944, FRA. 7023472, GRB. 1319341, ITL. 0894623, MEX. 0116409, PNM. 0002539, SPN. 0409740, STZ. 0000000, SWD. 7216008, TIW. 0006838, USR. 0374867, VZL. 0031909.
3,879,199.—SURFACE TREATMENT OF ARSENIC-SELENIUM PHOTOCONDUCTORS. APR. 22, 1975.
3,884,688.—PHOTOSENSITIVE ELEMENT EMPLOYING A VITREOUS BISMUTH-SELENIUM FILM. MAY 20, 1975.
3,887,368.—COMPOSITION. JUNE 3, 1975.
3,898,083.—HIGH SENSITIVITY VISIBLE INFRARED PHOTOCONDUCTOR. AUG. 5, 1975.
3,909,458.—PHOTOSENSITIVE VITREOUS LAYER COMPRISING BISMUTH AND SELENIUM. SEPT. 30, 1975.
4,015,029.—SELENIUM & SELENIUM ALLOY EVAPORATION TECHNIQUE. MAR. 29, 1977.
4,126,457.—EVAPORATION TECHNIQUE FOR PRODUCING TEMPERATURE PHOTORECEPTOR ALLOYS. NOV. 21, 1978. CAN. 1046864.

Class 2A 1C

3,379,527.—PHOTOCONDUCTIVE INSULATORS COMPRISING ACTIVATED SULFIDES SELENIDES AND SULFOSELENIDES OF CADMIUM. APR. 23, 1968. CAN. 0907921, GRB. 1079065.
3,682,631.—METHOD OF FORMING AN ELECTROPHOTOGRAPHIC LAYER CONTAINING A BENZOQUANAMINE RESIN BINDER. AUG. 8, 1972.

3,867,145.—METHANOL AND HEAT TREATED ZINC OXIDE. FEB. 18, 1975.
3,971,742.—ORGANO-CHALCOGEN COMPOSITIONS. JULY 27, 1976.

Class 2A 1D

3,469,978.—PHOTOSENSITIVE ELEMENT. SEPT. 30, 1969. CAN. 0872173, GRB. 1171909, JAP. 0552967.
3,522,040.—PHOTOSENSITIVE INSULATING MATERIAL. JULY 28, 1970. CAN. 0884808, GRB. 1171910, JAP. 0552966.
3,627,573.—COMPOSITION AND METHOD. DEC. 14, 1971. ARG. 0176480, AUS. 0441224, BEL. 0721965. CAN. 0892493, FRA. 0095985, GRB. 1251630, ITL. 0889828, MEX. 0124897, SPN. 0358960, STZ. 0517359, VZL. 0030358.

Class 2A 1E

3,238,150.—PHOTOCONDUCTIVE CADMIUM SULFIDE POWDER AND METHOD FOR THE PREPARATION THEREOF. MAR. 1, 1966. CAN. 0712516, GRB. 1062022, JAP. 0486530.
3,879,200.—NOVEL XEROGRAPHIC PLATE CONTAINING PHOTOINJECTING BIX-BENZIMIDAZOLE PIGMENTS. APR. 22, 1975. ARG. 0188392, AUS. 0465970, BEL. 0763545, BRA. 0088118, CAN. 0928123, CHL. 0027130, EGR. 0093279, FRA. 7107565, GRB. 1337222, ITL. 0919105, MEX. 0122169, PNM. 0002460, SAF. 0711225, SPN. 0388590, TIW. 0008178, USR. 0449515.
3,909,261.—XEROGRAPHIC IMAGING MEMBER HAVING PHOTOCONDUCTIVE MATERIAL IN INTERLOCKING CONTINUOUS PATHS. SEPT. 30, 1975. ARG. 0186443, ATR. 0451252, BEL. 0763544, CAN. 0925741, CHL. 0026794, FRA. 7107567, GRB. 1296291, ITL. 0918909, MEX. 0122096, NZL. 0162891, PLP. 0009378, PNM. 0002396, SAF. 0711227, SPN. 0388639, STZ. 0568591, SWD. 0367259, TIW. 0007844, USR. 0398062.

Class 2A 1F

3,394,001.—ELECTROPHOTOGRAPHIC SENSITIVE MATERIAL CONTAINING ELECTRON-DONOR DYE LAYERS. JULY 23, 1968. GRB. 1106562.
3,498,835.—METHOD FOR MAKING XEROGRAPHIC PLATES. MAR. 3, 1970. ARG. 0154134, AUS. 0418468, BEL. 0700454, CAN. 0872174, FRA. 1529285, GRB. 1189504, ITL. 0807717, JAP. 0567234, MEX. 0096199, SPN. 0342303, STZ. 0479093, SWD. 0332346, VZL. 0024014.
3,532,496.—XRGRPHC PLTS AND PROCS EMPLYNG HMGNUS DISPRSNS OF VTREOUS SLNIUM AND SNSTZNG DYES AS PHTCNDCTV LAYER. OCT. 6, 1970.

Class 2A 1G

3,288,603.—METHOD OF RESTORING XEROGRAPHIC PROPERTIES TO A GLASS BINDER PLATE. NOV. 29, 1966. CAN. 0800955, FRA. 1432127, GER. 1497201, GRB. 1088473, ITL. 0802168, JAP. 0519677.
3,397,982.—XIC PLATE W/INORGANIC GLASS BINDER HAVING OVERCOATING CONSISTING ESSENTIALLY OF ALUMINUM OXIDE. AUG. 20, 1968. ARG. 0150690, AUS. 0407349, BEL. 0674140, CAN. 0866142, FRA. 1460232, GER. 1497230, GRB. 1129674, ITL. 0822914, JAP. 0531894, MEX. 0085270, SWD. 0319976.
3,451,846.—PROCESS OF MAKING XEROGRAPHIC PLATE. JUNE 24, 1969. CAN. 0818384, GRB. 1183961, JAP. 0598621.
3,510,298.—PROCESS OF ACTIVATING PHOTOCONDUCTIVE MATERIAL IN GLASS BINDER. MAY 5, 1970. CAN. 0834668, GER. 1572366, GRB. 1189822, JAP. 0552968.
3,537,848.—PROCESS OF TREATING A XEROGRAPHIC GLASS BINDER PLATE AND PRODUCT. NOV. 3, 1970. ARG. 0180580.
3,655,376.—ELECTROPHOTOGRAPHIC DENITRIFIED GLASS BINDER PLATE. APR. 11, 1972.
3,885,962.—PHOTOGRAPHIC AND ELECTROPHOTOGRAPHIC MEMBERS WITH GLASS FIBER CONTAINING PAPER SUBSTRATES. MAY 27, 1975.

Class 2A 2

3,657,272.—PROCESS FOR PREPARING X-FORM METAL FREE PHTHALOCYANINE. APR. 18, 1972.
3,738,831.—CHALCOGEN ORGANIC COMPOUNDS USED IN ELECTROPHOTOGRAPHIC PLATES AND PROCESS. JUNE 12, 1973.
3,758,301.—ELECTROPHOTOGRAPHIC USE OF SELENIUM CONTAINING POLYMERS. SEPT. 11, 1973.
3,770,428.—ORGANIC PHOTOCONDUCTIVE MATERIAL. NOV. 6, 1973.
3,864,144.—PROCESS FOR PREPARATION OF PHOTOCONDUCTIVE FILMS FROM INTRACTABLE MATERIALS. FEB. 4, 1975. GRB. 1414158, TIW. 0008534.
3,870,516.—METHOD OF IMAGING PHOTOCONDUCTOR IN CHARGE TRANSPORT BINDER. MAR. 11, 1975. AUS. 0466028, BEL. 0763541, CAN. 0931413, CHL. 0026797, EGR. 0094762, FRA. 7107559, GRB. 1343671, ITL. 0919108, MEX. 0122098, NZL. 0162883, PNM. 0002450, SAF. 0711219, SPN. 0388584, STZ. 0567744.
3,877,936.—PHOTOCONDUCTIVE COPOLYMER OF N-VINYLCARBAZOLE AND N-VINYLPHTHALIMIDE. APR. 15, 1975. BEL. 0812436.
3,879,198.—ELECTROPHOTOGRAPHIC AMBIPOLAR PHOTOCONDUCTIVE COMPOSITION AND IMAGING METHOD. APR. 22, 1975.
3,882,087.—ORGANIC PHOTOCONDUCTIVE MATERIAL. MAY 6, 1975.
3,903,107.—DIRECT ALPHA TO X PHASE CONVERSION OF METAL CONTAINING PHTHALOCYANINE. SEPT. 2, 1975. BEL. 0815632, SAF. 0743536.
3,915,702.—PHTOELCTRC & ELCTRPHTGRPHC PGMNTS COMPRISING DERIVATIVES OF CONDENSED PLYCYLC ARMATC HYDRCABN A. OCT. 28, 1975.
3,915,704.—PHOTOINDUCED ACID CATALYZED DEGRADATION OF DEGRADABLE POLYMERS. OCT. 28, 1975.
3,917,483.—PHOTOINDUCED ACID CATALTZED DEPOLYMERIZATION OF DEGRADABLE POLYMERS. NOV. 4, 1975.
3,923,762.—PROCESS FOR PREPARATION OF 2-ANTHRYL AND SUBSTITUTED 2-ANTHRYL FUNCTIONAL MONOMERS AND P. DEC. 2, 1975. BEL. 0822305, STZ. 0032598.
3,926,629.—ELECTROPHOTOGRAPHIC METHOD AND PLATE EMPLOYING A PHTHALOCYANINE POLYMER. DEC. 16, 1975.
3,932,180.—DIRECT ALPHA TO X PHASE CONVERSION OF METAL-FREE PHTHALOCYANINE. JAN. 13, 1976. BEL. 0815632, SAF. 0743536.
3,943,108.—PHOTOCONDUCTIVE COMPOSITION OF AN ALDEHYDE CONDENSATE. MAR. 9, 1976.
3,954,906.—AMBIPOLAR PHOTOCONDUCTIVE COMPOSITION AND IMAGING METHOD. MAY 4, 1976.
3,970,602.—COPOLYMERS OF N-VINYLCARBAZOLE AND N-VINYLPHTHALIMIDE AND DERIVATIVES THEREOF. JULY 20, 1976. BEL. 0812436.
3,978,029.—PHOTOCONDUCTIVE COMPOSITIONS AND IMAGING MEMBERS AND METHODS EMPLOYING SAME. AUG. 31, 1976. ARG. 0206212, BEL. 0816552, FRA. 7422479, SAF. 0744129.
3,981,848.—PHOTOCONDUCTIVE COMPOSITION AND IMAGING METHODS EMPLOYING SAME. SEPT. 21, 1976. ARG. 0206211, ATR. 0332734, FRA. 7422484.
4,043,812.—A PROCESS FOR PREPARATION OF 2-ANTHRYL & SUBSTITUTED 2-ANTHRYL FUNCTIONAL MONOMERS AND POLY. AUG. 23, 1977. BEL. 822305, FRA. 7527053, STZ. 32598.
4,089,684.—IMAGING METHOD UTILIZING THE CHEMICAL REACTIVITY OF DONOR-ACCEPTOR MIXTURES. MAY 16, 1978.
4,117,239.—PROCESS FOR PREPARATION OF 2-ANTHRYL AND SUBSTITUTED 2-ANTHRYL FUNCTIONAL MONOMERS & POLYMERS. SEPT. 26, 1978. BEL. 822305.
4,197,242.—POTASSIUM PHTHALOCYANINE COMPLEXES, METHOD OF PREPARATION, AND PHTHALOCYANINE PURIFICATION PROCESSES. APR. 8, 1980.

Class 2A 2A

3,408,181.—HEAT DEFORMABLE RECORDING MATERIALS CONTAINING PHOTOCONDUCTIVE RESINOUS CHARGE TRANSFER COMPLE. OCT. 29, 1968. CAN. 0843620, FRA. 1463744, GER. 1522677, GRB. 1138552, ITL. 0755286, MEX. 0109927.
3,432,415.—ELECTROPHORETIC IMG. PROCESS USING PHOTOSENSITIVE XANTHENONIUM SALTS. MAR. 11, 1969. AUS. 0439502, BEL. 0743895, CAN. 0851118, GER. 1522701, GRB. 1155747, JAP. 0650631, MEX. 0104632.
3,445,227.—ELECTROPHOTOGRAPHIC IMAGING PROCESSES EMPLOYING 2,4 DIAMINOTRIAZINES AS ELCTRCLY PHOTOSNSTV PRT. MAY 20, 1969. BEL. 0743891, CAN. 0852681, GER. 1522687, GRB. 1146019, JAP. 0617789.
3,447,922.—ELECTRICALLY PHOTOSENSITIVE PARTICLES USEFUL IN PHOTOELECTROPHORETIC AND XEROGRAPHIC IMAGING PROC. JUNE 3, 1969.

3,448,029.—ELECTROPHORETIC IMAGING PROCESS USING 8,13-DIOXODINAPTHO-2,1-B,2,3-D-FURAN-6-CARBOXAMIDE PIGMEN. JUNE 3, 1969.
3,448,030.—ELECTRICALLY PHOTOSENSITIVE PART. USEFUL IN PHOTOELECTROPHORETIC AND XEROGRAPHIC IMAGING PROCESSE. JUNE 3, 1969. BEL. 0743893, CAN. 0943830, GRB. 1155554, JAP. 0686735.
3,482,970.—ELECTROPHOTOGRAPHIC PLATE AND PROCESS USING NAPHTHYLAZO COMPOUNDS AS THE PRIMARY PHOTOCONDUCTOR. DEC. 9, 1969. AUS. 0453397, BEL. 0742978, CAN. 0869486, GRB. 1296390, ITL. 0878843, JAP. 0725059.
3,553,009.—PROCESS OF PREPARING AN ELECTROPHOTOGRAPHIC MATERIAL. JAN. 5, 1971.
3,594,163.—METHOD OF CONVERTING ALPHA PHTHALOCYANINE TO THE X FORM. JULY 20, 1971.
3,640,710.—PHTHALOCYANINE PHOTOCONDUCTIVE ELEMENTS CONTAINING MULTIPLE BINDER MATERIALS. FEB. 8, 1972. ARG. 0184666, ATR. 0328861, AUS. 0456430, BEL. 0760751, CAN. 0933012, FRA. 7047636, GRB. 1333605, ITL. 0913999, PNM. 0002243, STZ. 0554550, SWD. 0365878, TIW. 0006738, USR. 0450420, VZL. 0032928.
3,667,943.—QUINACRIDONE PIGMENTS IN ELECTROPHOTOGRAPHIC IMAGING. JUNE 6, 1972. ARG. 0184823, AUS. 0452663, BEL. 0737810, CAN. 0877882, EGR. 0077411, FRA. 6928700, GRB. 1278702, ITL. 0888005, SPN. 0370720, STZ. 0519183, SWD. 0346396, TIW. 0005517, USR. 0351396.
3,667,944.—QUINACRIDONE PIGMENTS IN ELECTROPHOTOGRAPHIC RECORDING. JUNE 6, 1972. ARG. 0177369, AUS. 0452031, BEL. 0741159, CAN. 0884807, FRA. 6937223, GRB. 1286079, ITL. 0879710, JAP. 0693421, MEX. 0115407.
3,667,945.—QUINACRIDONE PIGMENTS IN ELECTROPHOTOGRAPHIC IMAGING. JUNE 6, 1972.
3,708,292.—PI-FORM METAL PHTHALOCYANINE. JAN. 2, 1973. ARG. 0194234, BEL. 0783793, GRB. 1396922, ITL. 0955644, MEX. 0128928.
3,708,293.—PI-FORM METAL-FREE PHTHALOCYANINE. JAN. 2, 1973. ARG. 0195167, BEL. 0783792, GRB. 1395769, ITL. 0955643, MEX. 0131970.
3,761,261.—PHTHALOCYANINE DYE SENSITIZERS FOR ZINC OXIDE. SEPT. 25, 1973.
3,816,118.—ELECTROPHOTOGRAPHIC ELEMENT CONTAINING PHTHALOCYANINE. JUNE 11, 1974. ARG. 0156316, CAN. 0890855, FRA. 0091579, GRB. 1175451, ITL. 0809972, MEX. 0115884, VZL. 0024012.
3,850,630.—XEROGRAPHIC PLATE CONTAINING PHOTOINJECTING INDIGOLD PIGMENTS. NOV. 26, 1974. ARG. 0188393, AUS. 0465971, BEL. 0763391, CAN. 0932198, CHL. 0027129, EGR. 0093923, FRA. 7107566, GRB. 1337221, ITL. 0919106, MEX. 0122099, NZL. 0162890, PNM. 0002480, SAF. 0711226, SPN. 0388591, TIW. 0006740, USR. 0463276.
3,865,798.—PHOTOACTIVE POLYMERS INDUCED EXOCYCLIC QUARTET CONCEPT. FEB. 11, 1975. AUS. 0462805, BEL. 0790689, FRA. 7237458, GRB. 1411998, ITL. 0969902, MEX. 0133728, SPN. 0407984, STZ. 0028515.
3,877,935.—NOVEL XEROGRAPHIC PLATE CONTAINING PHOTOINJECTING POLYNUCLEAR QUINONE PIGMENTS. APR. 15, 1975. ARG. 0002614, AUS. 0452620, BEL. 0763389, CAN. 0932197, CHL. 0027120, FRA. 7107563, GRB. 1337224, GUA. 0002614, ITL. 0919103, MEX. 0122100, NZL. 0162887, PNM. 0002467, SAF. 0711223, SPN. 0388588, TIW. 0006741.
3,884,689.—POLYCYCLIC AROMATIC POLYMER AS A PHOTO-CONDUCTOR OR OVERLAYER. MAY 20, 1975.
3,895,945.—PROCESS FOR PREPARATION OF A DYESTUFF SENSITIZED PHOTOCONDUCTIVE COMPOSITION. JULY 22, 1975.
3,899,328.—ACTIVE MATRIX AND INTRINSIC PHOTOCONDUCTIVE POLYMER OF A LINEAR POLYSILOXANE. AUG. 12, 1975.
3,899,329.—MIXTURE OF PHOTOCONDUCTORS IN AN ACTIVE MATRIX. AUG. 12, 1975. ARG. 0187047, ATR. 327000, AUS. 0450862, BEL. 0775968, CAN. 0971797, CHL. 0027272, FRA. 7143179, GRB. 1348138, GUA. 0002724, ITL. 0941822, MEX. 1328040, PNM. 0002602, SAF. 0718022, SPN. 397403, STZ. 0026771.
3,904,407.—XEROGRAPHIC PLATE CONTAINING PHOTOINJECTING PERYLENE PIGMENTS. SEPT. 9, 1975. ARG. 0189747, AUS. 0465811, BEL. 0763388, CAN. 0933010, CHL. 0026796, EGR. 0093458, FRA. 7107562, GRB. 1337225, GUA. 0002799, ITL. 0919102, MEX. 0126620, PNM. 0002468, SAF. 0711222, SPN. 0388587, SWD. 0362509, TIW. 0007210, USR. 0473381.
3,923,762.—PROCESS FOR PREPARATION OF 2-ANTHRYL AND SUBSTITUTED 2-ANTHRYL FUNCTIONAL MONOMERS AND P. DEC. 2, 1975. BEL. 0822305, STZ. 0032598.
3,927,026.—PROCESS OF MAKING X-FORM METAL PHTHALOCYANINE. DEC. 16, 1975. CAN. 0916703, GRB. 1312946, JAP. 0693981.
3,932,454.—PROCESS OF MAKING HEXAGONAL ALPHA METAL-FREE PHTHALOCYANINE. JAN. 13, 1976. CAN. 0918152, GRB. 1327084, JAP. 0752724.
3,941,085.—RELEASE MATERIAL APPLICATOR. MAR. 2, 1976.
3,941,750.—POLYVINYL PYREMAL-AN INTRINSIC PHOTOCONDUCTOR AND ACTIVE MATRIX POLYMER. MAR. 2, 1976.
3,951,654.—MTHD ENHNCMT RATE AND EFFICIENCY OF PHOTODSCHG OF ELCTRPHGRIC IMAGING MEMBERS COMPRSNO PHTHALOCYA. APR. 20, 1976.
4,006,017.—PHOTOCONDUCTIVE COMPOSITION ARTICLE & PROESS. FEB. 1, 1977.
4,031,109.—METHOD FOR THE PREPARATION OF X-FORM METAL PHTHALOCYANINE AND X-FORM METAL FREE COMPOUNDS. JUNE 21, 1977. ARG. 0188048.
4,046,563.—PHOTOCONDUCTIVE COMPOSITION CONTAINING A TRICYANOPYREME, ARTICLE AND PROCESS OF USE. SEPT. 6, 1977. FRA. 7509147.
4,050,934.—ELECTRON ACCEPTOR MONOMERS & POLYMERS. SEPT. 27, 1977.
4,056,391.—METHOD FOR ENHANCING SOLID SOLUTION STABILITY OF ELECTRON ACCEPTOR MOLECULES AND ELECTROPHO. NOV. 1, 1977.
4,072,519.—PHOTOCONDUCTIVE COMPOSITION, AND ELEMENT. FEB. 7, 1978. FRA. 7509146.
4,076,528.—XEROGRAPHIC BINDER PLATE. FEB. 28, 1978. AUS. 456887, BEL. 775967, CAN. 971796, CHL. 27271, FRA. 7143178, GRB. 1358269, ITL. 941821, MEX. 124712, PNM. 2599, SAF. 718023, SPN. 397402, STZ. 26772.
4,092,161.—INORGANIC PHOTOCONDUCTORS WITH PHENYL SUBSTITUTED IMAGE TRANSPORT MATERIALS. MAY 30, 1978. AUS. 462805, BEL. 790689, CAN. 1007922, FRA. 7411475, GRB. 1462986, ITL. 969902, MEX. 133728, SPN. 407984, STZ. 28515, VZL. 33956.
4,098,795.—METHOD FOR THE PREPARATION OF X-FORM METAL FREE PHTHALOCYAMINE. JULY 4, 1978. ARG. 182328, BEL. 737989, CAN. 899870, FRA. 6928871, GER. 1943381, GRB. 1280843, ITL. 870314, JAP. 654041, MEX. 116011.
4,122,114.—1-TRICYANOINYLPYRENE. OCT. 24, 1978.
4,153,802.—ELECTRON ACCEPTOR MONOMERS AND POLYMERS. MAY 8, 1979. FRA. 7626102.
4,161,490.—ELECTRON ACCEPTOR MONOMERS. JULY 17, 1979. FRA. 7626102.
4,225,692.—ELECTRON ACCEPTOR MONOMERS AND POLYMERS. SEPT. 30, 1980. CAN. 1069370, FRA. 7626102, GRB. 1555086.

Class 2A 2B

3,408,182.—ELECTROPHOTOGRAPHIC MATERIALS AND METHODS EMPLOYING PHOTOCONDUCTIVE RESINOUS CHARGE TRANSFER COMP. OCT. 29, 1968. CAN. 0847805, FRA. 1463743, GRB. 1137665, ITL. 0755290, JAP. 0572185, MEX. 0107318.
3,408,183.—ELECTROPHOTOGRAPHIC MATERIALS AND METHODS EMPLOYING PHOTOCONDUCTIVE RESINOUS CHARGE TRANSFER COMP. OCT. 29, 1968. CAN. 0819066, FRA. 1463745, GER. 1522676, GRB. 1126048, ITL. 0755287, JAP. 0727091, MEX. 0106758.
3,408,184.—ELECTROPHOTOGRAPHIC MATERIALS AND METHODS EMPLOYING PHOTOCONDUCTIVE RESINOUS CHARGE TRNSFR COMPLE. OCT. 29, 1968. CAN. 0818382, FRA. 1463727, GRB. 1137664, ITL. 0755289, JAP. 0726382, MEX. 0105835.
3,408,185.—ELECTROPHOTOGRAPHIC MATERIALS AND METHOD EMPLOYING PHOTOCONDUCTIVE RESINOUS CHARGE TRANSFER COMP. OCT. 29, 1968. CAN. 0848383, FRA. 1463728, GER. 1645192, GRB. 1137476, ITL. 0755291, MEX. 0106763.
3,408,186.—ELECTROPHOTOGRAPHIC MATERIALS AND METHODS EMPLOYING PHOTOCONDUCTIVE RESINOUS CHARGE TRNSFR COMPLE. OCT. 29, 1968. CAN. 0846736, FRA. 1463746, GRB. 1138629, ITL. 0755288, JAP. 0569483, MEX. 0106589.
3,408,187.—ELECTROPHOTOGRAPHIC MATER AND METH EMPLOYING PHOTOCONDUCTIVE RESINOUS CHARGE TRANSFER COMPLEXES. OCT. 29, 1968. CAN. 0867298, GER. 1522721, GRB. 1163097, JAP. 0797719.
3,408,188.—ELECTROPHOTOGRAPHIC PLATE AND PROCESS COMPRISING PHOTOCONDUCTIVE

CHARGE TRANSFER COMPLEXES. OCT. 29, 1968. CAN. 0869485, GRB. 1183516, JAP. 0797720.
3,408,189.—ELECTROPHOTOGRAPHIC PLATE AND PROCESS EMPLOYING PHOTOCONDUCTIVE CHARGE TRANSFER COMPLEXES. OCT. 29, 1968.
3,408,190.—ELECTROPHOTOGRAPHIC PLATE AND PROCESS EMPLOYING PHOTOCONDUCTIVE CHARGE TRANSFER COMPLEXES. OCT. 29, 1968. CAN. 0850019, GER. 1302772, GRB. 1182172.
3,879,201.—PERSISTENT PHOTOCONDUCTIVE COMPOSITIONS. APR. 22, 1975.
3,896,184.—POLYMERS OF BENZANTHRACENE AS ACTIVE MATRIX MATERIALS. JULY 22, 1975.
3,923,762.—PROCESS FOR PREPARATION OF 2-ANTHRYL AND SUBSTITUTED 2-ANTHRYL FUNCTIONAL MONOMERS AND P. DEC. 2, 1975. BEL. 0822305, STZ. 0037598.
4,033,769.—PERSISTENT PHOTOCONDUCTIVE COMPOSITIONS. JULY 5, 1977.
4,069,046.—POLYMERIZED VINYL CARBAZOLES SENSITIZED BY NITRO-SUGSTITUTED 9-DICYANOMETHYLENE FLUORENES. JAN. 17, 1978.

Class 2A 2C

4,019,902.—PHOTORECEPTOR FABRICATION. APR. 26, 1977.

Class 2A2E

4,099,969.—COATING METHOD TO IMPROVE ADHESION OF PHOTOCONDUCTORS. JULY 11, 1978.

Class 2B

3,617,265.—METHOD FOR PREPARING A RESIN OVERCOATED ELECTROPHOTOGRAPHIC PLATE. NOV. 2, 1971.
3,635,705.—MULTI-LAYERED HALOGEN-DOPED SELENIUM PHOTOCONDUCTIVE ELEMENT. JAN. 18, 1972. GRB. 1311329, ITL. 0901916, JAP. 0739531.
3,639,120.—2-LAYERED PHOTOCONDUCTIVE ELEMNT CONTNG A HALOGEN DOPED STORG LAYER AND SELENIUM ALLOY CNTRL LAYER. FEB. 1, 1972. CAN. 0870535, GRB. 1193876, JAP. 0558440.
3,655,377.—TRI-LAYERED SELENIUM DOPED PHOTORECEPTOR. APR. 11, 1972.
3,712,810.—AMBIPOLAR PHOTORECEPTOR AND METHOD. JAN. 23, 1973. CAN. 0971025, GRB. 1363266.
3,843,407.—BLADE CLEANING WITH REVERSE MOVEMENT. OCT. 22, 1974.
3,848,994.—LINE CHARGE TONER CLEANING. NOV. 19, 1974.
3,928,034.—ELECTRON TRANSPORT LAYER OVER AN INORGANIC PHOTOCONDUCTIVE LAYER. DEC. 23, 1975. AUS. 0453265, BEL. 0763542, CAN. 0932199, CHL. 0026802, EGR. 0093924, FRA. 7107560, GRB. 1337227, GUA. 0002423, ITL. 0919109, MEX. 0121682, NZL. 0162884, PNM. 0002473, SAF. 0711220, SPN. 0388585, STZ. 0576659, SWD. 0363176, TIW.00 07181.
3,953,207.—A COMPOSITE LAYERED PHOTORECEPTOR. APR. 27, 1976.
4,007,043.—PHOTOCONDUCTIVE ELEMENTS WITH COPOLYMER CHARGE TRANSPORT LAYERS. FEB. 8, 1977.
4,007,100.—PROCESS FOR PREPARATION OF SOLID PHASE DISPERSION OF PHOTOCONDUCTIVE MATERIALS. FEB. 8, 1977.
4,007,101.—PROCESS FOR PREPARATION OF SOLID PHASE DISPERSION OF PHOTOCONDUCTIVE MATERIALS. FEB. 8, 1977.
4,012,251.—MULTI-LAYERED PHOTOCONDUCTIVE MEMBER. MAR. 15, 1977.
4,013,528.—PROCESS FOR PREPARATION OF SOLID PHASE DISPERSION OF PHOTOCONDUCTIVE MATRIALS. MAR. 22, 1977.
4,013,529.—PROCESS FOR PREPARATION OF SOLID PHASE DISPERSION OF PHOTOCONDUCTIVE MATERIALS. MAR. 22, 1977.
4,013,530.—PROCESS FOR PREPARATION OF SOLID PHASE DISPERSION OF PHOTOCONDUCTIVE MATERIALS. MAR. 22, 1977.
4,013,623.—INTRACHAIN CHARGE TRANSFER COMPLEXES. MAR. 22, 1977.
4,014,768.—PROCESS FOR PREPARATION OF SOLID PHASE DISPERSION OF PHOTOCONDUCTIVE MATERIALS. MAR. 29, 1977.
4,016,058.—PROCESS FOR PREPARATION OF SOLID PHASE DISPERSION OF PHOTOCONDUCTIVE MATERIALS. APR. 5, 1977.
4,018,602.—METHOD FOR IN-SITU FABRICATION OF PHOTOCONDUCTIVE COMPOSITE. APR. 19, 1977.
4,022,956.—POLYMERS OF BENZANTHRACENE AS ACTIVE MATRIX MATERIALS. MAY 10, 1977.
4,023,969.—DEFORMABLE ELASTOMER IMAGING MEMBER EMPLOYING AN INTERNAL OPAQUE DEFORMABLE METALLIC LAYER. MAY 17, 1977.
4,025,710.—INTRACHAIN CHARGE TRANSFER COMPLEXES. MAY 24, 1977.
4,028,203.—PROCESS FOR PREPARATION OF SOLID PHASE DISPERSION OF PHOTOCONDUCTIVE MATERIALS. JUNE 7, 1977.
4,030,991.—PROCESS FOR PREPARATION OF SOLID PHASE DISPERSION OF PHOTOCONDUCTIVE MATERIALS. JUNE 21, 1977.
4,030,992.—PROCESS FOR PREPARATION OF SOLID PHASE DISPERSION OF PHOTOCONDUCTIVE MATERIALS. JUNE 21, 1977.
4,030,993.—PROCESS FOR PREPARATION OF SOLID PHASE DISPERSION OF PHOTOCONDUCTIVE MATERIALS. JUNE 21, 1977.
4,046,564.—ELECTROPHOTOGRAPHIC IMAGING MEMBERS WITH PHOTOCONDUCTIVE LAYER CONTAINING ELECTRON ACCEPTOR. SEPT. 6, 1977.
4,047,948.—COMPOSITE LAYERED IMAGING MEMBER FOR ELECTROPHOTOGRAPHY. SEPT. 13, 1977.
4,047,949.—COMPOSITE LAYERED IMAGING MEMBER FOR ELECTROPHOTOGRAPHY. SEPT. 13, 1977.
4,049,449.—METHOD FOR FORMING AN ELECTROPHOTOGRAPHIC MEMBER. SEPT. 20, 1977.
4,050,935.—TRIGONAL SE LAYER OVERCOATED BY BIS(4-DIETHYLAMINO-2-METHYLPHENYL) PHENYLMETANE CONTAINING. SEPT. 27, 1977. FRA. 7709994.
4,052,205.—PHOTOCONDUCTIVE IMAGING MEMBER WITH STUBSTITUTED ANTHRACENE PLASTICIZER. OCT. 4, 1977.
4,053,311.—POLY-L-VINYL CARBAZOLE IMAGE TRANSPORT LAYER PLASTICIZED OF BIS-(4-DIETHYLAMINO-2-METHYLPHE. OCT. 11, 1977.
4,062,886.—FLUORENONE CARBOXYLE ACID ESTERS. DEC. 13, 1977. FRA. 7621895.
4,063,947.—PHOTOCONDUCTIVE INSULATING FILMS COMPRISING FLUORENONE-SUBSTITUTED OLIGOMERS. DEC. 20, 1977.
4,075,012.—INTRACHAIN CHARGE TRANSFER COMPLEXES USE IN ELECTROPHOTOGRAPHIC IMAGING. FEB. 21, 1977.
4,078,925.—A COMPOSITE LAYERED PHOTORECEPTOR. MAR. 14, 1978.
4,081,274.—COMPOSITE LAYERED PHOTORECEPTOR. MAR. 28, 1978.
4,098,984.—ELECTRON ACCEPTOR POLYMERS. JULY 4, 1978.
4,115,116.—IMAGING MEMBER HAVING A POLYCARBONATE-BIPHENYL DIAMINE CHARGE TRANSPORT LAYER. SEPT. 19, 1978.
4,116,691.—ELECTROPHOTOGRAPHIC IMAGING MEMBER OF MONOMERS HAVING PENDANT ELECTRON ACCEPTOR GROUPS. SEPT. 26, 1978.
4,117,072.—PROCESS FOR ENHANCEMENT OF MECHANICAL PROPERTIES OF PHOTOCONDUCTIVE POLYMERS. SEPT. 26, 1978. FRA. 7531736. GRB. 1469371.
4,122,113.—9-FLUORENYL ACRYLATES. OCT. 24, 1978.
4,129,581.—MONOMERS HAVING PENDANT ELECTRON ACCEPTOR GROUPS-PROCESS FOR PREPARATION AND USE. DEC. 12, 1978.
4,140,529.—CHARGE TRANSPORT OVERLAYER IN PHOTOCONDUCTIVE ELEMENT AND METHOD OF USE. FEB. 20, 1979.
4,143,225.—HOMOPOLYMERS OF A FLUORENONE DERIVATIVE HAVING PENDANT ELECTRON ACCEPTOR GROUPS. MAR. 6, 1979.
4,172,933.—MONOMERS HAVING PENDANT ELECTRON ACCEPTOR GROUPS—PROCESS FOR PREPARATION AND USE. OCT. 30, 1979.
4,263,388.—ELECTROPHOTOGRAPHIC IMAGING DEVICE. APR. 21, 1981.
4,273,846.—IMAGING MEMBER HAVING A CHARGE TRANSPORT LAYER OF A TERPHENYL DIAMINE AND A POLYCARBONATE RESIN. JUNE 16, 1981.

Class 2B 1

3,243,293.—PLATE FOR ELECTROSTATIC ELECTROPHOTOGRAPHY. MAR. 29, 1966. CAN. 0830430.
3,288,602.—XEROGRAPHIC PLATE AND METHOD. NOV. 29, 1966. CAN. 0795978, GER. 1237902, GRB. 1029181, ITL. 0690835, JAP. 0578399.
3,312,547.—XEROGRAPHIC PLATE AND PROCESSES OF MAKING AND USING SAME. APR. 4, 1967.

3,341,326.—DARK DECAY CONTROLLED XEROGRAPHY. SEPT. 12, 1967. AUS. 0285843, CAN. 0729829, FRA. 1377592, GRB. 1029199, ITL. 0706101.
3,352,669.—PHOTOCONDUCTIVE MEMBER AND PROCESSES OF PREPARING AND USING SAME. NOV. 14, 1967. AUS. 0405164, CAN. 0834670, FRA. 1422625, GER. 1497194, GRB. 1052970, HOL. 0137891, ITL. 0749420, JAP. 0501912.
3,393,070.—XEROGRAPHIC PLATE WITH ELECTRIC FIELD REGULATING LAYER. JULY 16, 1968. CAN. 0871308, GER. 1490987, GRB. 1141452, JAP. 0764435, MEX. 0105660.
3,508,918.—XEROGRAPHIC PLATE CONTAINING ALUMINUM SELENIDE BARRIER LAYER. APR. 28, 1970. CAN. 0872175.
3,539,255.—XEROGRAPHIC RECORDING APPARATUS - LIGHT-CONTROLLED-CHARGE STORAGE LAYER. NOV. 10, 1970.
3,573,906.—ELECTROPHOTOGRAPHIC PLATE AND PROCESS. APR. 6, 1971. ARG. 0177890, AUS. 0441534, BEL. 0725173, BRA. 0088092, CAN. 0906801, CZC. 0157053, FRA. 1594981, GRB. 1217726, ITL. 0852743, SPN. 0379204, SWD. 0335063, USR. 0448658, VZL. 0029780.
3,619,153.—PHOTOCONDUCTIVE ELMNT AND PROCESS EMPLYNG SBSTUTD SILYLISOBUTYLETHYLENEDIAMINE ADHESIVE INTERLAYE. NOV. 9, 1971. ARG. 0180118, ATR. 0305764, AUS. 0434739, BEL. 0733402, BUL. 0017353, CAN. 0898034, DNK. 0131833, EGR. 0078900, FRA. 6917079, GRB. 1229559, GRK. 0040058, IND. 0121424, ISR. 0032250, ITL. 0864983, JAP. 0702563, LXB. 0058678, MEX. 0109385, NOR. 0125557, NZL. 0156506, PAK. 0121226, PLP. 0008481, PNM. 0001683, PTG. 0051734, RHD. 2236953, RMN. 0054256, SAF. 0693687, SPN. 0367618, STZ. 0511461, SWD. 0341926, TIW. 0006442, TRK. 0015647, USR. 0300036, VTM. 0001865.
3,713,821.—PHOTORECEPTOR INTERFACE. JAN. 30, 1973. ARG. 0194731, ATR. 0322357, AUS. 0464711, BEL. 0784453, CAN. 0964916, EGR. 0099870, FRA. 7220691, GRB. 1393612, ISR. 0039655, ITL. 0959793, SAF. 0723958, SPN. 0403454, STZ. 0554007, SWD. 0367491, VZL. 0032939.
3,720,514.—ELECTROPHOTOGRAPHIC PAPER HAVING AN IMONGANIC COLLOIDAL OXIDE COATING. MAR. 13, 1973.
3,738,831.—CHALCOGEN ORGANIC COMPOUNDS USED IN ELECTROPHOTOGRAPHIC PLATES AND PROCESS. JUNE 12, 1973.
3,758,301.—ELECTROPHOTOGRAPHIC USE OF SELENIUM CONTAINING POLYMERS. SEPT. 11, 1973.
3,795,513.—METHOD OF STORING AN ELECTROSTATIC IMAGE IN A MULTILAYERED PHOTORECEPTOR. MAR. 5, 1974. BEL. 0788303, CAN. 976018, FRA. 7230831, GRB. 1388934, ITL. 0964410, SWD. 7211341.
3,799,775.—XEROGRAPHIC SYSTEM. MAR. 26, 1974. ARG. 0172053, ATR. 0300559, AUS. 0423123, BEL. 0720940, BRA. 6800650, BUR. 0000043, CAM. 00043/3, CAN. 0895805, CHL. 0024257, EIR. 0032903, FRA. 1586238, GNR. 0000039, GRB. 1243384, GRK. 0039223, IND. 0119625, ISR. 0031543, ITL. 0844307, LEB. 0002816, LIB. P102693, LXB. 0056890, MEX. 0105163, MLG. 0003058, MLW. 00MW569, MNC. 8126975, MRC. 0014727, NOR. 0128132, NZL. 0153781, PAK. 0120895, PLP. 0009065, PNM. 0002053, PTG. 0050322, RHD. 5369487, SAF. 0681107, SPN. 0358355, STZ. 0506102, SWD. 0345530, TGR. 0000547, URG. 0009361, VTM. 0001830, VZL. 0023696, ZMB. 0156971.
3,816,288.—GLOW DISCHARGE TECHNIQUE FOR THE PREPARATION OF ELECTROPHOTOGRAPHIC PLATES. JUNE 11, 1974.
3,888,667.—HETROPHASE ADHESIVE COMPOSITIONS CONTAINING POLYSULFONE FOR METAL-SELENIUM COMPOSITIES. JUNE 10, 1975.
3,891,435.—HETEROPHASE ADHESIVE COMPOSITIONS CONTAINING CHLOROSULFONATED POLYETHLENE FOR METAL-SELENIUM CO. JUNE 24, 1975.
3,895,131.—ELECTROLESS COATING METHOD. JULY 15, 1975.
3,907,650.—PHOTOSENSITIVE BINDER LAYER FOR XEROGRAPHY. SEPT. 23, 1975.
3,914,126.—NICKEL OXIDE INTERLAYERS FOR PHOTOCONDUCTIVE ELEMENTS. OCT. 21, 1975.
3,958,207.—INJECTION CURRENT DEVICE AND METHOD. MAY 18, 1976.
4,011,078.—PHOTOSENSITIVE MEMBER AND METHOD OF IMAGING. MAR. 8, 1977.
4,106,935.—XEROGRAPHIC PLATE HAVING AN PHTHALOCYANINE PIGMENT INTERFACE BARRIER LAYER. AUG. 15, 1978.
4,232,103.—PHENYL BENZOTRIAZOLE STABILIZED PHOTOSENSITIVE DEVICE. NOV. 4, 1980.

Class 2B 2

3,256,089.—MASKED PLATE XEROGRAPHY. JUNE 14, 1966.
3,397,982.—XIC PLATE W/INORGANIC GLASS BINDER HAVING OVERCOATING CONSISTING ESSENTIALLY OF ALUMINUM OXIDE. AUG. 20, 1968. ARG. 0150690, AUS. 0407349, BEL. 0674140, CAN. 0866142, FRA. 1460232, GER. 1497230, GRB. 1129674, ITL. 0822914, JAP. 0531894, MEX. 0085270, SWD. 0319976.
3,434,832.—XEROGRAPHIC PLATE COMPRISING A PROTECTIVE COATING OF A RESIN MIXED WITH A METALLIC STEARATE. MAR. 25, 1969. CAN. 0835883, FRA. 1454672, GER. 1497223, GRB. 1128156, ITL. 0772535, JAP. 0545757, MEX. 0085603.
3,488,189.—ELECTROPHOTOGRAPHIC RECORDING MEMBER HAVING SOLID CRYSTALLINE PLASTICIZR AVAILBL AT IMGNG SURFA. JAN. 6, 1970. CAN. 0866700, FRA. 1506810, GRB. 1183205, ITL. 0788976, JAP. 0570734, MEX. 0108241.
3,720,514.—ELECTROPHOTOGRAPHIC PAPER HAVING AN IMONGANIC COLLOIDAL OXIDE COATING. MAR. 13, 1973.
3,738,831.—CHALCOGEN ORGANIC COMPOUNDS USED IN ELECTROPHOTOGRAPHIC PLATES AND PROCESS. JUNE 12, 1973.
3,758,301.—ELECTROPHOTOGRAPHIC USE OF SELENIUM CONTAINING POLYMERS. SEPT. 11, 1973.
3,837,849.—MULTILAYERED VARIABLE SPEED PHOTORECEPTOR AND METHOD OF USING SAME. SEPT. 24, 1974. BEL. 0788302, CAN. 0978007, FRA. 7230830, GRB. 1401040, ITL. 0964409, SWD. 7211342.
3,850,630.—XEROGRAPHIC PLATE CONTAINING PHOTOINJECTING INDIGOLD PIGMENTS. NOV. 26, 1974. ARG. 0188393, AUS. 0465971, BEL. 0763391, CAN. 0932198, CHL. 0027129, EGR. 0093923, FRA. 7107566, GRB. 1337221, ITL. 0919106, MEX. 0122099, NZL. 0162890, PNM. 0002480, SAF. 0711226, SPN. 0388591, TIW. 0006740, USR. 0463276.
3,856,548.—STRIPPABLE OVERCOATING FOR IMPROVED XEROGRAPHIC PLATES. DEC. 24, 1974. GRB. 1426030.
3,860,421.—N-ALKYL MORPHOLINE TREATMENT OF A SELENIUM-CONTAINING PHOTOCONDUCTIVE LAYER. JAN. 14, 1975.
3,868,983.—HAND TOOL. MAR. 4, 1975.
3,877,935.—NOVEL XEROGRAPHIC PLATE CONTAINING PHOTOINJECTING POLYNUCLEAR QUINONE PIGMENTS. APR. 15, 1975. ARG. 0002614, AUS. 0452620, BEL. 0763389, CAN. 0932197, CHL. 0027120, FRA. 7107563, GRB. 1337224, GUA. 0002614, ITL. 0919103, MEX. 0122100, NZL. 0162887, PNM. 0002467, SAF. 0711223, SPN. 0388588, TIW. 0006741.
3,884,690.—POLYESTER PHOTOCONDUCTORS AND MATRIX MATERIALS. MAY 20, 1975.
3,884,825.—IMAGING COMPOSITION. MAY 20, 1975. AUS. 0467835, BEL. 0802879, CAN. 0995963, FRA. 7328589, GRB. 1437041, ITL. 0991465, SPN. 0417382.
3,896,184.—POLYMERS OF BENZANTHRACENE AS ACTIVE MATRIX MATERIALS. JULY 22, 1975.
3,900,589.—AN ELECTROSTATOGRAPHIC IMAGING PROCESS. AUG. 19, 1975. AUS. 0467835, BEL. 0802879, GRB. 1437041.
3,904,407.—XEROGRAPHIC PLATE CONTAINING PHOTOINJECTING PERYLENE PIGMENTS. SEPT. 9, 1975. ARG. 0189747, AUS. 0465811, BEL. 0763388, CAN. 0933010, CHL. 0026796, EGR. 0093458, FRA. 7107562, GRB. 1337225, GUA. 0002799, ITL. 0919102, MEX. 0126620, PNM. 0002468, SAF. 0711222, SPN. 0388587, SWD. 0362509, TIW. 0007210, USR. 0473381.
3,912,511.—MULTICOMPONENT ORGANIC COATING OF POLYESTER POLYURETHAND AND HUMIDITY. OCT. 14, 1975. ARG. 0182692, BEL. 0767325, CAN. 0938143, FRA. 7118948, GRB. 1350476, ITL. 0926822, MEX. 0121668.
3,954,464.—METHOD OF FABRICATING A COMPOSITE TRIGONAL SELENIUM PHOTORECEPTOR. MAY 4, 1976.
3,961,953.—METHOD OF FABRICATING COMPOSITES TRIGONAL SELENIUM PHOTORECEPTORS. JUNE 8, 1976.
3,973,843.—ELECTROSTATOGRAPHIC IMAGING APPARATUS. AUG. 10, 1976. AUS. 0467835, BEL. 0802879, GRB. 1437041.
4,006,019.—METHOD FOR PREPARATION OF AN ELECTROSTATOGRAPHIC PHOTORECEPTOR. FEB. 1, 1977.
4,006,020.—OVERCOATED ELECTROSTATOGRAPHIC PHOTORECEPTOR. FEB. 1, 1977.
4,012,255.—OVERCOATED ELECTROSTATOGRAPHIC PHOTORECEPTOR. MAR. 15, 1977.

4,022,956.—POLYMERS OF BENZANTHRACENE AS ACTIVE MATRIX MATERIALS. MAY 10, 1977.
4,064,514.—PORTABLE CAMERA. DEC. 20, 1977.
4,072,521.—AMIDES OF W AND CIS ALKENOIC ACIDS IN IMAGING PROCESS AND ELEMENT. FEB. 7, 1978.
4,073,649.—DI CARBOXYLIC ACID BIS AMIDES AND IMPROVED IMAGING PROCESS. FEB. 14, 1978.
4,076,641.—W- AND CIS ALKENOIC ACID AMIDES IN ELECTROSTATOGRAPHIC DEVELOPERS. FEB. 28, 1978.
4,099,968.—DICARBOXYLIC ACID BIS-AMIDES IN ELECTROSTATIC IMAGING COMPOSITIONS AND PROCESSES. JULY 11, 1978.
4,123,269.—ELECTROSTATOGRAPHIC PHOTOSENSITIVE DEVICE COMPRISING HOLE INJECTING AND HOLE TRANSPORT LAYER. OCT. 31, 1978.
4,126,455.—ELECTROSTATOGRAPHIC IMAGING PROCESS AND RELATED APPARATUS. NOV. 21, 1978. AUS. 467835. BEL. 802879. CAN. 995963. FRA. 7328588. GRB. 1437041. ITL. 991465. SPN. 417382. USR. 637099.
4,147,541.—ELECTROSTATIC IMAGING MEMBER WITH ACID LUBRICANT. APR. 3, 1979. AUS. 467835. BEL. 802879. CAN. 995963. FRA. 7328588. GRB. 1437041. ITL. 991465. SPN. 417382. USR. 637099.
4,181,772.—ADHESIVE GENERATOR OVERCOATED PHOTORECEPTORS. JAN. 1, 1980.
4,275,133.—ELECTROPHOTOGRAPHIC IMAGING PROCESSES UTILIZING ADHESIVE GENERATOR OVERCOATED PHOTORECEPTORS. JUNE 23, 1981.
4,281,054.—OVERCOATED PHOTORECEPTOR CONTAINING INJECTING CONTACT. JULY 28, 1981.

Class 2B 3

3,510,660.—METHOD FOR VISUAL COMPARISON OF INFORMATION. MAY 5, 1970. CAN. 0848611, GRB. 1201376, JAP. 0595641.
3,543,031.—DEVICE AND PROCESS FOR IMAGE STORAGE. NOV. 24, 1970. ARG. 0161299, AUS. 0432468, BEL. 0703461, CAN. 0862332, FRA. 1543309, GER. 1549142, GRB. 1201374, ITL. 0811521, JAP. 0742514, MEX. 0100142, SPN. 0344004, STZ. 0497022, SWD. 0354169, VZL. 0023663.

Class 2B 4

3,428,453.—IMAGE FORMING PROCESS UTILIZING XEROGRAPHY-ETCHING PROCESS. FEB. 18, 1969. CAN. 0856722, FRA. 1428775, GRB. 1085151, ITL. 0754825.
3,446,616.—XEROGRAPHIC IMAGING EMPLOYING A SELECTIVELY REMOVABLE LAYER. MAY 27, 1969.
3,926,626.—CIRCULATION IMAGING METHOD. DEC. 16, 1975.
4,007,372.—IMPROVED METHOD & ARTICLE FOR IMAGE REPRODUCTION. FEB. 8, 1977.
4,011,078.—PHOTOSENSITIVE MEMBER AND METHOD OF IMAGING. MAR. 8, 1977.

Class 2C

3,307,941.—PLASTIC DEFORMATION IMAGING FILM AND PROCESS. MAR. 7, 1967. CAN. 0801262.
3,317,316.—INTERNAL FROST RECORDING. MAY 2, 1967. ATR. 0272830, AUS. 0292886, BEL. 0648043, CAN. 0882890, FRA. 1399017, GER. 1243018, GRB. 1069741, ITL. 0725002, JAP. 0521009, LXB. 0046101, NOR. 0122729, STZ. 0469292, SWD. 0319083.
3,408,181.—HEAT DEFORMABLE RECORDING MATERIALS CONTAINING PHOTOCONDUCTIVE RESINOUS CHARGE TRANSFER COMPLE. OCT. 29, 1968. CAN. 0843620, FRA. 1463744, GER. 1522677, GRB. 1138552, ITL. 0755286, MEX. 0109927.
3,443,937.—IMAGE RESOLUTION. MAY 13, 1969. CAN. 0824316, GRB. 1137766, JAP. 0544235.
3,443,938.—FROST IMAGING EMPLOYING A DEFORMABLE ELECTRODE. MAY 13, 1969. CAN. 0801263, FRA. 1441806, GRB. 1073097, JAP. 0573732.
3,526,879.—INTERNAL FROST RECORDING APPARATUS USING A DEFORMABLE PHOTOCONDUCTOR. SEPT. 1, 1970.
3,672,883.—CRYSTALLINE POLYMERS FOR FROST. JUNE 27, 1972.
3,672,886.—NOVOLAR RESINS IN DEFORMATION IMAGING. JUNE 27, 1972.
3,707,391.—IMAGING PROCESS. DEC. 26, 1972.
3,873,197.—APPARATUS FOR REGULATING THE TONER CONCENTRATION IN A ELECTROPHOTOGRAPHIC DEVICE. MAR. 25, 1975.
3,892,567.—ELECTROSTATICALLY DEFORMABLE MATERIALS. JULY 1, 1975. ARG. 0196065, BEL. 0781973, CAN. 9814520, FRA. 7213876, GRB. 1394286, ITL. 0951328, MEX. 0124825.
3,944,358.—COLOR IMAGE REPRODUCTION SYSTEMS. MAR. 16, 1976.
3,951,533.—COLOR IMAGE REPRODUCTION SYSTEM. APR. 20, 1976.
3,980,476.—IMAGING SYSTEM. SEPT. 14, 1976.
3,997,243.—COLOR IMAGE REPRODUCTION SYSTEM. DEC. 14, 1976.
4,023,969.—DEFORMABLE ELASTOMER IMAGING MEMBER EMPLOYING AN INTERNAL OPAQUE DEFORMABLE METALLIC LAYER. MAY 17, 1977.
4,054,381.—TONER FILTER ARRANGEMENT. OCT. 18, 1977.
4,065,031.—PROGRAMMABLE DEVELOPMENT CONTROL SYSTEM. DEC. 27, 1977.
4,093,369.—CLEANING SYSTEM. JUNE 6, 1978.

Class 2D

3,411,903.—XEROGRAPHIC METHOD AND PLATE COMPRISING PHOTOCONDUCTIVE INSULATING FIBERS. NOV. 19, 1968. ARG. 0149620, ATR. 0270379, AUS. 0410718, BEL. 0672668, BRA. 0084119, CAN. 0834669, CHL. 0023648, CLB. 0014943, DNK. 0120577, EGR. 0055545, FRA. 1464792, GER. 1497224, GRB. 1084024, GRK. 0031509, IND. 0102560, ISR. 0024632, ITL. 0734376, JAP. 0724233, LXB. 0049849, MEX. 0098487, NOR. 0122817, NZL. 0143432, PLD. 0067959, PLP. 0004547, PNM. 0001533, PRU. 0008384, PTG. 0044879, SAF. 0656280, SPN. 0319795, STZ. 0458076, SWD. 0308250, THL. 1084024, TIW. 0003735, URG. 0006624, VZL. 0023996.
3,787,235.—METHOD OF ELECTROPHOTOGRAPHIC SENSITIVE PAPER. JAN. 22, 1974.
3,951,658.—COLOR MODIFYING IMAGING METHOD AND ARTICLE. APR. 20, 1976.
4,045,413.—POSSIBLE ACTIVE MATRIX POLYMERS. AUG. 30, 1977. FRA. 7432710.
4,130,274.—PNEUMATIC REGISTRATION APPARATUS. DEC. 19, 1978. BEL. 847912. SAF. 6401.

Class 2E

3,341,681.—XEROGRAPHIC PLATE FABRICATION. SEPT. 12, 1967. CAN. 0780598, FRA. 1415795, GRB. 1070555, HOL. 0144068, IND. 0094992, ITL. 0738063.
3,350,203.—XEROGRAPHIC PLATE. OCT. 31, 1967. CAN. 0715017, FRA. 1421950, GER. 1270400, GRB. 1085989, ITL. 0750417, JAP. 0511420.
3,447,957.—METHOD OF MAKING A SMOOTH SURFACED ADHESIVE BINDER XEROGRAPHIC PLATE. JUNE 3, 1969. CAN. 0788947.
3,468,705.—METHOD OF PREPARING LEAD OXIDE FILMS. SEPT. 23, 1969. CAN. 0806134, FRA. 1501511, GER. 1521942, GRB. 1170428, ITL. 0787638, JAP. 0634868, MEX. 0093335.
3,472,679.—COATING SURFACES. OCT. 14, 1969. CAN. 0896992.
3,536,397.—XEROGRAPHIC APPARATUS. OCT. 27, 1970. CAN. 0917231.
3,536,481.—ELECTROLYTIC PROCESS OF FORMING A XEROGRAPHIC BELT. OCT. 27, 1970. ARG. 0175659, AUS. 0416583, BEL. 0716410, CAN. 0865080, FRA. 1572605, GRB. 1200670, ITL. 0859021, MEX. 0103043, SWD. 0345698.
3,536,485.—XEROGRAPHIC PLATE SUPPORTED BY A MANDREL. OCT. 27, 1970.
3,578,445.—XEROGRAPHIC PLATE FABRICATION. MAY 11, 1971.
3,634,134.—METHOD OF MAKING A PHOTOCONDUCTIVE COMPOSITION AND DEVICE. JAN. 11, 1972. ARG. 0184074, ATR. 0307226, AUS. 449514, BEL. 0752440, CAN. 0904111, EGR. 0083703, FRA. 7023473, GRB. 1319342, ITL. 0894622, MEX. 0117839, PNM. 0002547, SPN. 0381111, STZ. 0548624, SWD. 0351734, TIW. 0007153.
3,695,757.—XEROGRAPHIC PLATE. OCT. 3, 1972.
3,746,571.—METHOD OF VACUUM EVAPORATION. JULY 17, 1973.
3,752,691.—METHOD OF VACUUM EVAPORATION. AUG. 14, 1973.
3,756,811.—ELECTROPHOTOGRAPHIC PROCESS EMPLOYING PHOTOCONDUCTIVE MATERIALS OF DIFFERENT DYNAMIC RANGES. SEPT. 4, 1973. CAN. 0894715, GRB. 1226578.
3,787,208.—XEROGRAPHIC IMAGE MEMBER HAVING PHOTOCONDUCTIVE MATERIAL IN INTERLOCKING CONTINUOUS PATHS. JAN. 22, 1974. ARG. 0186443, ATR. 0451252, BEL. 0763544, CAN. 0925741, CHL. 0026794, FRA. 7107567, GRB. 1296291, ITL. 0918909, MEX. 0122096, NZL. 0162891, PLP. 0009378,

PNM. 0002396, SAF. 0711227, SPN. 0388639, STZ. 0568591, SWD. 0367259, TIW. 0007844, USR. 0398062.

3,788,889.—METHOD OF PREPARING BINDER LAYERS. JAN. 29, 1974.

3,837,906.—METHOD OF MAKING A XEROGRAPHIC BINDER LAYER AND LAYER SO PREPARED. SEPT. 24, 1974. ARG. 0186444, ATR. 0319750, AUS. 0448147, BEL. 0763392, CAN. 0939204, CHL. 0027098, FRA. 7107568, GRB. 1292425, ITL. 0918910, NZL. 0162892, PNM. 0002439, SAF. 0711228, SPN. 0388640, STZ. 0558554, SWD. 0036479, TIW. 0007713.

3,856,548.—STRIPPABLE OVERCOATING FOR IMPROVED XEROGRAPHIC PLATES. DEC. 24, 1974. GRB. 1426030.

3,894,868.—ELECTRON TRANSPORT BINDER STRUCTURE. JULY 15, 1975. AUS. 0461951, BEL. 0763543, CAN. 0932196, CHL. 0026795, EGR. 0096346, FRA. 7107561, GRB. 1337226, GUA. 0002467, ITL. 0919110, MEX. 0120807, NZL. 0162885, PNM. 0002481, SAF. 0711221, SPN. 0388586, TIW. 0007182, USR. 0444380.

3,911,091.—MILLING TRIGONAL SELENIUM PARTICLES TO IMPROVED XEROGRAPHIC PERFORMANCE. OCT. 7, 1975.

3,911,162.—SYSTEM FOR VAPOR DEPOSITION OF THIN FILMS. OCT. 7, 1975. BEL 0798324.

3,926,762.—R F SPUTTERING OF TRIGONAL SELENIUM FILM. DEC. 16, 1975.

3,944,682.—METHOD OF PROVIDING AN ELECTROPHOTOGRAPHIC COATING AND COMPOSITIONS FOR METHOD. MAR. 16, 1976.

3,945,723.—RESILIENT ROLLERS. MAR. 23, 1976. ARG. 0205448.

3,954,466.—ELECTROSTATOGRAPHIC PHOTORECEPTOR. MAY 4, 1976.

3,979,495.—METHOD OF MAKING A PHOTORECPTOR. SEPT. 7, 1976.

3,984,183.—SHEET STRIPPING FROM IMAGING SURFACE. OCT. 5, 1976. BEL. 0836791.

3,992,091.—ROUGHENED IMAGING SURFACE FOR CLEANING. NOV. 16, 1976.

4,014,697.—ELECTROSTATOGRAPHIC IMAGING MEMBER. MAR. 29, 1977.

4,014,728.—METHOD OF MAKING AN IMAGING MEMBER. MAR. 29, 1977.

4,015,985.—COMPOSITE XEROGRAPHIC PHOTORECPTOR WITH INJECTING CONTACT LAYER. APRIL 5, 1977. BEL. 0840221.

4,016,310.—COATR HRDWR AND METH FOR OBTNG UNFRM PHROCNDTV LAYR ON A XEROGRAPHIC PHOTORECEPTOR. APR. 5, 1977.

4,023,523.—COATING HARDWARE AND METHOD FOR OBTAINING UNIFORM PHOTOCONDUCTIVE LAYERS ON A XEROGRAPHIC PHOTO. MAY 17, 1977.

4,025,188.—PHOTOACTIVE DEVICE FOR XEROGRAPHY. MAY 24, 1977.

4,033,768.—METHOD FOR THE PREPARATION OF AN ELECTROSTATOGRAPHIC PHOTOSENSITIVE DEVICE. JULY 5, 1977.

4,047,973.—RECOVERY OF SELENIUM AND SELENIUM ALLOYS BY HUDRAULIC LATHING. SEPT. 13, 1977.

4,071,363.—METHOD OF MAKING COMPOSITE XEROGRAPHIC PHOTORECEPTOR WITH INJECTING CONTACT LAYER FOR A PHO. JAN. 31, 1978. BEL. 840221. FRA. 7610576.

4,072,518.—METHOD OF MAKING TRIGONAL SELENIUM INTERLAYERS BY GLOW DISCHARGE. FEB. 7, 1978.

4,076,183.—PHOTOCONDUCTOR INCREMENTING APPARATUS. FEB. 28, 1978.

4,076,564.—ROUGHENED IMAGING SURFACE FOR CLEANING. FEB. 28, 1978.

4,103,994.—RECORDING PLATE. AUG. 1, 1978.

4,115,115.—CRYSTALLIZATION OF SELENIUM IN POLYMER MATRICES VIA IN SITU GENERATION OF ORGANIC CRYSTALLIZATION. SEPT. 19, 1978.

4,122,030.—FORMATION OF COLLOIDAL DISPERSIONS OF SELENIUM BY THE LOCUS CONTROL METHOD. OCT. 24, 1978.

4,126,457.—EVAPORATION TECHNIQUE FOR PRODUCING TEMPERATURE PHOTORECEPTOR ALLOYS. NOV. 21, 1978. CAN. 1046864.

4,175,959.—PRECIPITATION OF PARTICULATE TRIGONAL SILENIUM FOR USE IN ELECTROPHOTOGRAPHY. NOV. 27, 1979. CAN. 1054339, GRB. 1510737.

4,192,603.—REPLENISHABLE PHOTOCONDUCTOR SYSTEM. MAR. 11, 1980.

4,206,994.—BELT TENSIONING SYSTEM. JUNE 10, 1980.

Class 2F

3,592,071.—BELT TRACKING APPARATUS. JULY 13, 1971. ARG. 0179666, BEL. 0751117, CAN. 0925118, FRA. 7019040, GRB. 1298926, ITL. 0893540, JAP. 0770135, MEX. 0118981, SPN. 0380136.

3,765,757.—TRANSPORT ARRANGEMENT FOR THIN SHEET MATERIAL. OCT. 16, 1973. BEL. 0793551, GRB. 1419978, ITL. 0972846, SPN. 0410107.

3,820,888.—MISTRACK INTERLOCK FOR SELENIUM BELT. JUNE 28, 1974.

3,867,027.—TRANSPORT ARRANGEMENT FOR THIN SHEET MATERIAL. FEB. 18, 1975. BEL. 0793551, CAN. 1004289, GRB. 1419978, ITL. 0972846, SPN. 0410107.

3,874,790.—FAIL-SAF MECH STPNG MVMNT PHTCNDCTV BLT ELTRSTC REPRDCTN MACH WHEN TRCKNG BECOMES IREGULAR AND UN. APR. 1, 1975.

3,888,577.—APPARATUS FOR PACKAGING AND SUBSEQUENTLY INSTALLING A BELT ONTO A ROLLER ASSEMBLY. JUNE 10, 1975. BEL. 0810900.

3,994,053.—DRUM SUPPORT APPARATUS. NOV. 30, 1976.

4,005,285.—OPTICAL SYSTEM FOR EXTENDING PHOTOSENSOR ARRAY RESOLUTION. JAN. 25, 1977.

4,009,388.—ARRANGEMENT FOR EXTENDING PHOTOSENSOR ARRAY SOLUTION. FEB. 22, 1977.

4,027,966.—TRACKING ASSEMBLY FOR AN ENDLESS BELT ELECTROSTATIC REPRODUCTION MACHINE. JUNE 7, 1977.

4,040,157.—DRUM SUPPORT APPARATUS. AUG. 9, 1977.

4,068,942.—ADVANCED PHOTORECEPTOR. JAN. 17, 1978. BEL. 847264, FRA. 7630970.

4,088,403.—REPLENISHABLE PHOTOSENSITIVE SYSTEM. MAY 9, 1978.

4,105,345.—EXPANDABLE PHOTORECEPTOR ENDBELLS. AUG. 8, 1978.

4,120,576.—DRUM SUPPORT APPARATUS. OCT. 17, 1978.

4,174,171.—BELT TRACKING SYSTEM. NOV. 13, 1979.

4,178,094.—BELT SUPPORT AND STEERING MODULE. DEC. 11, 1979.

4,189,223.—A STEERING AND SUPPORTING SYSTEM FOR A PHOTOCONDUCTIVE BELT. FEB. 19, 1980.

4,197,002.—PNEUMATIC SYSTEM FOR SUPPORTING AND STEERING BELT. APR. 8, 1980.

4,198,155.—PHOTOCONDUCTIVE BELT ASSEMBLY. APR. 15, 1980.

4,215,932.—REPLENISHABLE PHOTOCONDUCTIVE SYSTEM. AUG. 5, 1980.

4,218,125.—PNEUMATIC SYSTEM FOR SUPPORTING A PHOTOCONDUCTIVE SURFACE. AUG. 19, 1980.

4,221,480.—A BELT SUPPORT AND CONTROL SYSTEM. SEPT. 9, 1980.

4,279,496.—BELT SUPPORT SYSTEM. JULY 21, 1981.

Class 3

3,935,517.—CONSTANT CURRENT CHARGING DEVICE. JAN. 27, 1976.

Class 3A

3,172,024.—CHARGE INDUCTION. MAR. 2, 1965. CAN. 0809341, FRA. 1294161, GER. 1414991, GRB. 0958663, JAP. 0455338.

3,254,998.—INDUCTION IMAGE FORMATION. JUNE 7, 1966. CAN. 0740576, FRA. 1357220, GER. 1276445, GRB. 1024985, JAP. 0451689.

3,288,602.—XEROGRAPHIC PLATE AND METHOD. NOV. 29, 1966. CAN. 0795978, GER. 1237902, GRB. 1029181, ITL. 0690835, JAP. 0578399.

3,684,364.—LIFTOFF ELECTRODE. AUG. 15, 1972.

3,842,273.—CORONA GENERATOR CLEANING APPARATUS. OCT. 15, 1974. AUS. 0480142, BEL. 0817485. GRB. 1458088, SPN. 0428358.

3,884,181.—CAPILLARY BAFFLE-CONSTANT OIL HEIGHT INDEPENDENT TO OIL LEVEL. MAY 20, 1975.

3,893,800.—BACKSIDE HEATING AND FIXING APP IN AN ELECTRONIC PHOTOGRAPH DUPLICATOR. JULY 8, 1975.

3,957,423.—STRIPPER FINGER DESIGN. MAY 18, 1976.

4,049,344.—ELECTROSTATIC IMAGING SYSTEM. SEPT. 20, 1977.

4,082,444.—LAMP CARRIAGE DRIVE SYSTEM. APR. 4, 1978.

Class 3B

3,160,746.—CORONA CHARGING APPARATUS FOR NON-UNIFORMLY CHARGING A XEROGRAPHIC PLATE IN A PREDETERMINED MAN. DEC. 8, 1964. GER. 1197475, GRB. 1011793, JAP. 0484759.

3,288,602.—XEROGRAPHIC PLATE AND METHOD. NOV. 29, 1966. CAN. 0795978, GER. 1237902, GRB. 1029181, ITL. 0690835, JAP. 0578399.

3,449,568.—CORONA DISCHARGE APPARATUS FOR CREATING AN ELECTROSTATIC CHARGE PATTERN ON A XEROGRAPHIC SURFAC. JUNE 10, 1969. CAN. 0858664.

3,532,494.—SOLID AREA DEVELOPMENT IN XEROGRAPHY EMPLOYING AN INSULATING SCREEN IN THE CHARGING STEP. OCT. 6, 1970.

3,543,022.—METH AND APPARATUS CHARG DISCRETE SMALL AREAS XEROGRAPHIC PLATES TO DIF POTENT CONT TONE PRINTG. NOV. 24, 1970. CAN. 0921971, GRB. 1186599.

3,784,299.—DARK DECAY RETARDATION. JAN. 8, 1974.

3,981,498.—NON-UNIFORM CHARGING OF SHEET MATERIAL. SEPT. 21, 1976.

4,043,656.—TRANSPARENCY COPYING MACHINE. AUG. 23,1977.

4,073,587.—COROTRON APPARATUS. FEB. 14, 1978.

4,095,233.—METHOD FOR FORMING A CHARGE PATTERN. JUNE 13, 1978.

Class 3C

3,160,746.—CORONA CHARGING APPARATUS FOR NON-UNIFORMLY CHARGING A XEROGRAPHIC PLATE IN A PREDETERMINED MAN. DEC. 8, 1964. GER. 1197475, GRB. 1011793, JAP. 0484759.

3,335,274.—XIC CHARGING APPARATUS WITH MEANS TO AUTOMATICALLY CONTROL THE POT ENTAIL APPLIED TO THE CORONA. AUG. 8, 1967. CAN. 0801834, FRA. 1459487, GRB. 1121498, ITL. 0734870, MEX. 0085777.

3,382,360.—XIC CHARGING SYSTEM HAVING MEANS FOR PROVIDING AN AIR CUSHION BETWEEN CHARGING DEVICE AND XIC DR. MAY 7, 1968.

3,457,405.—CORONA WIRE MOUNTING MEANS WHICH COMPENSATES FOR WIRE EXPANSION DUE TO HEAT. JULY 22, 1969. CAN. 0857406, GRB. 1196927.

3,471,695.—CORONA CHGNG APPTS W/MEANS TO URGE A FLOW OF AERIFORM FLUID ACROSS THE CORONA WIRES. OCT. 7, 1969. CAN. 0856355, GRB. 1220745.

3,483,372.—CORONA CHARGING DEVICE WITH CONDUCTIVE SHIELD AND INSULATING MEANS ON SAID SHIELD. DEC. 9, 1969. CAN. 0840508, GRB. 1169632, JAP. 0770817.

3,517,995.—METHOD AND APPARATUS FOR INCREASING THE EFFICIENCY OF CORONA CHARGNG. JUNE 30, 1970. ARG. 0172471, BEL. 0721553, CAN. 0856714, FRA. 1585283, GRB. 1247034, ITL. 0844214, JAP. 0708414, MEX. 0103113, VZL. 0023701.

3,566,108.—CORONA GENERATING ELECTRODE STRUCTURE FOR USE IN A XEROGRAPHIC CHARGING METHOD. FEB. 23, 1971.

3,598,991.—ELCTRSTC CHRGNG DEV HAVNG SPRK GAP VOLTG REGULTR BETWEEN A CORONA SOURCE AND VOLTG SOURCE. AUG. 10, 1971. AUS. 0457211, BEL. 0754426, CAN. 0916233, CZC. 0163219, EGR. 0084558, FRA. 7029148, GRB. 1322378, ITL. 0901159, JAP. 0715800, PLD. 0070053, SPN. 0382404, STZ. 0513436, SWD. 0359663, TIW. 0007173, USR. 0442617.

3,604,925.—APPARATUS FOR CONTROLLING THE AMOUNT OF CHARGE APPLIED TO SURFACE. SEPT. 14, 1971.

3,612,864.—IMAGING SYSTEM UTILIZING AN ELECTRODE TREATED W/MIXTURE OF HYDROSCOPIC MATERIAL AND HYDROPHILIC B. OCT. 21, 1971.

3,675,011.—METHODS AND APPARATUS FOR OPERATING RAISED COROTRONS OF OPPOSITE POLARITY. JULY 4, 1972.

3,723,793.—COATED CORONA GENERATING ELECTRODE. MAR. 27, 1973.

3,742,237.—AC CORONA CHARGING APPARATUS. JUNE 26, 1973. CAN. 0955299, GRB. 1387209.

3,760,229.—A C COROTRON. SEPT. 18, 1973. GRB. 1410671.

3,769,506.—CORONA GENERATING METHOD AND APPARATUS THEREFOR. OCT. 30, 1973.

3,790,999.—CORONA WIRE APPARATUS. FEB. 12, 1974.

3,800,153.—ELECTROPHOTOGRAPHY CHARGING DEVICE. MAR. 26, 1974.

3,813,547.—CORONA GENERATING APPARATUS. MAY 28, 1974.

3,813,548.—CORONA GENERATING METHODS AND APPARATUS THEREFOR. MAY 28, 1974.

3,816,749.—EXPOSURE CONTROLLED CORONA DEVICE. JUNE 11, 1974.

3,851,229.—CURRENT MEASURING DEVICE. NOV. 26, 1974.

3,870,883.—ELECTROSTATIC PRINTING MACHINE WITH SELF-CLEANING CORONAL GENERATING DEVICE. MAR. 11, 1975.

3,901,189.—MAGNETIC BRUSH DEVELOPING APPARATUS. AUG. 26, 1975.

3,919,605.—CORONA DISCHARGE APPARATUS. NOV. 11, 1975.

3,922,548.—CORONA CHARGING DEVICE AND SUPPORT ARRANGEMENT. NOV. 25, 1975.

3,937,960.—CHARGING DEVICE FOR ELECTROPHOTOGRAPHY. FEB. 10, 1976.

3,939,386.—TECHNIQUE FOR CHARGING DIELECTRIC SURFACES TO HIGH VOLTAGE. FEB. 17, 1976.

3,950,680.—ELECTROSTATOGRAPHIC DIAGNOSTIC SYSTEM. APR. 13, 1976.

3,976,880.—CORONA STABILIZATION ARRANGEMENT. AUG. 24, 1976.

3,976,881.—ARRANGEMENT FOR STABILIZING CORONA DEVICES. AUG. 24, 1976.

3,978,379.—CORONA GENERATING DEVICE WITH AN IMPROVED CLEANING MECHANISM. AUG. 31, 1976.

3,983,393.—CORONA DEVICE WITH REDUCED OZONE EMISSION. SEPT. 28; 1976.

3,996,466.—TRANSFER CORONA DEVICE WITH ADJUSTABLE SHIELD BIAS. DEC. 7, 1976.

4,027,960.—TRANSFER SYSTEM FOR ELECTROSTATIC REPRODUCTION MACHINE. JUNE 7, 1977.

4,038,544.—IMPROVED APPARATUS AND METHOD FOR DEVELOPING AN ELECTROSTATIC LATENT IMAGE. JULY 26, 1977.

4,038,546.—AN IMPROVED APPARATUS FOR A CORONA GENERATING DEVICE. JULY 26, 1977.

4,056,723.—ROTATIABLE CORONA DEVICE. NOV. 1, 1977.

4,068,284.—CORONA DISCHARGE DEVICE. JAN. 10, 1978. CAN. 1029794, FRA. 7432708, GRB. 1407718.

4,072,413.—ELECTROSTATOGRAPHIC REPRODUCTION METHODS AND MACHINES. FEB. 7,1978.

4,099,219.—CORONODE TENSIONING AND SUPPORT ARRANGEMENT. JULY 4, 1978.

4,100,411.—BIASING ARRANGEMENT FOR A CORONA DISCHARGE DEVICE. JULY 11, 1978.

4,110,811.—SUPPORT STRUCTURE FOR A CORONA GENERATING DEVICE. AUG. 29, 1978.

4,112,298.—CORONA WIRE MOUNTING MEANS. SEPT. 5, 1978.

4,112,299.—CORONA DEVICE WITH SEGMENTED SHIELD. SEPT. 5, 1978. GRB. 1499477.

4,118,751.—CORONODE CONNECTION ARRANGEMENT. OCT. 3, 1978.

4,138,719.—AUTOMATIC WRITING SYSTEMS AND METHODS OF WORD PROCESSING. FEB. 6, 1979. CAN. 1055161. GRB. 1530444.

4,227,234.—CORONA CHARGING ELEMENT. OCT. 7, 1980.

4,258,258.—CORONA WIRE MOUNTING DEVICE. MAR. 24, 1981.

Class 3C 1

3,275,837.—XEROGRAPHIC CHARGING APPARATUS. SEPT. 27, 1966. ARG. 0158430, ATR. 0242511, AUS. 0276177, BEL. 0642095, CAN. 0753356, FRA. 1385736, GER. 1488286, GRB. 1040264, ITL. 0712888, JAP. 0477814, MEX. 0075819, STZ. 0460930, SWD. 0314133.

3,307,034.—TWO-WIRE CORONA DISCHARGE SYSTEM FOR SINGLE-STEP ELECTROSTATIC IMAGE FORMATION. FEB. 28, 1967. CAN. 0768802, FRA. 1416275, GER. 1275864, GRB. 1055416, ITL. 0744235, JAP. 0491997.

3,492,476.—ELECTROSTATIC CHARGING DEVICE UTILIZING BOTH AC AND DC FIELDS. JAN. 27, 1970. ARG. 0175174, ATR. 0300573, AUS. 0425768, BEL. 0729976, CAN. 0862232, CHL. 0024600, CZC. 0158639, DNK. 0126728, EGR. 0081574, EIR. 0032976, FRA. 6907701, GRB. 1255998, GRK. 0039915, IND. 0120218, ISR. 0031765, ITL. 0860063, LXB. 0058234, MEX. 0108894, NOR. 0129709, NZL. 0155636, PAK. 0120995, PLD. 0017649, PLP. 0007523, PNM. 0001813, PTG. 0051315, RHD. 1096947, RMN. 0055216, SAF. 0691730, SPN. 0364888, STZ. 0493014, SWD. 0341528, UAR. 0009212, USR. 0318248, VTM. 0001845, VZL. 0023731.

3,873,895.—TECHNIQUE FOR CHARGING DIELECTRIC SURFACES TO HIGH VOLTAGE. MAR. 25, 1975.

3,886,416.—METHOD AND APPARATUS FOR ADJUSTING COROTRON CURRENTS. MAY 27, 1975.

3,908,164.—CORONA CURRENT MEASUREMENT AND CONTROL ARRANGEMENT. SEPT. 23, 1975.

3,921,042.—ELECTROSTATIC REPRODUCTION MACHINE WITH IMPROVED CORONA GENERATING DEVICE. NOV. 18, 1975.

3,961,193.—SELF ADJUSTING CORONA DEVICE. JUNE 1, 1976.
3,984,182.—PRETRANSFER CONDITIONING FOR ELECTROSTATIC PRINTING. OCT. 5, 1976.
4,038,593.—REGULATED HIGH VOLTAGE AC POWER SUPPLY WITH REGULATED DC BIAS CURRENT. JULY 26, 1977. BEL. 0846572.
4,039,257.—PRETRANSFER COROTRON SWITCHING. AUG. 2, 1977. GRB. 1498259
4,042,874.—HIGH VOLTAGE AC POWER SUPPLY WITH AUTOMATICALLY VARIABLE DC BIAS CURRENT. AUG. 16, 1977.
4,057,723.—COMPACT CORONA CHARGING DEVICE. NOV. 8, 1977. BEL. 850335, SPN. 455179.
4,086,650.—CORONA CHARGING DEVICE. APR. 25, 1978. BEL. 844116, SAF. 764178, SPN. 449789.
4,110,614.—CORONA DEVICE. AUG. 29, 1978.
4,234,249.—TRACKING POWER SUPPLY FOR AC AND DC COROTRONS. NOV. 18, 1980.
4,239,373.—FULL WAVE RECTIFICATION APPARATUS FOR OPERATION OF DC COROTRONS. DEC. 16, 1980.

Class 3C 2

3,304,476.—TRANSFER SWITCH FOR A XEROGRAPHIC APPARATUS. FEB. 14, 1967.
3,433,948.—NEGATIVE CORONA DISCHARGE SYSTEM USING ALTERNATING ELECTRIC FIELDS ACROSS THE AIR GAP. MAR. 18, 1969. CAN. 0855811, FRA. 1564157, GRB. 1211442, ITL. 0829718, JAP. 0655407.
3,541,329.—NEGATIVE CORONA DEVICE WITH MEANS FOR PRODUCING A REPELLING ELECTROSTATIC FIELD. NOV. 17, 1970. CAN. 0841136, FRA. 1546256, GRB. 1205040, JAP. 0634886.
4,140,874.—AUTOMATIC COMPENSATING CIRCUIT. FEB. 20, 1979. CAN. 1056919. GRB. 1522703.

Class 3C 3

3,649,830.—UNIFORM CHARGING METHOD AND APPARATUS USING AN ARRAY OF NEEDLE ELECTRODES. MAR. 14, 1972.
3,655,966.—ELECTRIC CHARGING DEVICE FOR ELECTROPHOTOGRAPHY. APR. 11, 1972.
3,689,767.—METHOD AND APPARATUS FOR UNIFORMLY CHARGING THE SURFACE OF AN INSULATING MEMBER. SEPT. 5, 1972.
3,709,595.—PRINTER SYSTEM. JAN. 9, 1973.

Class 3C 4

3,220,324.—PHOTOCONDUCTIVELY CONTROLLED CORONA CHARGING. NOV. 30, 1965. CAN. 0710976, GER. 1243967, GRB. 1034009, JAP. 0651092.
3,307,034.—TWO-WIRE CORONA DISCHARGE SYSTEM FOR SINGLE-STEP ELECTROSTATIC IMAGE FORMATION. FEB. 28, 1967. CAN. 0768802, FRA. 1416275, GER. 1275864, GRB. 1055416, ITL. 0744235, JAP. 0491997.
3,492,476.—ELECTROSTATIC CHARGING DEVICE UTILIZING BOTH AC AND DC FIELDS. JAN. 27, 1970. ARG. 0175174, ATR. 0300573, AUS. 0425768, BEL. 0729976, CAN. 0862232, CHL. 0024600, CZC. 0158639, DNK. 0126728, EGR. 0081574, EIR. 0032976, FRA. 6907701, GRB. 1255998, GRK. 0039915, IND. 0120218, ISR. 0031765, ITL. 0860063, LXB. 0058234, MEX. 0108894, NOR. 0129709, NZL. 0155636, PAK. 0120995, PLD. 0017649, PLP. 0007523, PNM. 0001813, PTG. 0051315, RHD. 1096947, RMN. 0055216, SAF. 0691730, SPN. 0364888, STZ. 0493014, SWD. 0341528, UAR. 0009212, USR. 0318248, VTM. 0001845, VZL. 0023731.
3,496,351.—CORONA CONTROL CIRCUIT FOR STEPPING XEROGRAPHIC RECORDNG APPARATUS. FEB. 17, 1970. CAN. 0834978, FRA. 1512919, GRB. 1170472, ITL. 0793742, JAP. 0923309.
3,688,107.—ELECTROSTATOGRAPHIC CHARGING APPARATUS. AUG. 29, 1972. CAN. 0938660, GRB. 1365130.
3,875,407.—CORONA GENERATOR CLEANING APPARATUS. APR. 1, 1975.
3,908,127.—CORONA GENERATING DEVICES. SEPT. 23, 1975.
3,909,614.—SCOROTRON POWER SUPPLY CIRCUIT. SEPT. 30, 1975.
3,936,635.—CORONA GENERATING DEVICE. FEB. 3, 1976.

Class 3C 5

3,970,381.—METHOD AND APPARATUS FOR XEROGRAPHIC REPRODUCTION. JULY 20, 1976. BEL. 0811188.

Class 3C 6

3,549,962.—UNIFORM ELECTROSTATIC CHARGING. DEC. 22, 1970. CAN. 0897757, GRB. 1189578.
3,648,133.—UNIFORM ELECTROSTATIC CHARGING OF A PHOTOCONDUCTIVE INSULATING SURFACE. MAR. 7, 1972.
3,743,830.—DEVICE FOR UNIFORMLY CHARGING A NON PLANAR ELECTROPHOTOGRAPHIC PLATE. JULY 3, 1973.
3,764,866.—CORONA GENERATOR. OCT. 9, 1973. ARG. 0198185, ATR. 0325420, AUS. 0467386, BEL. 0793227, CZC. 0168018, DNK. 0131699, FRA. 7245484, GRB. 1402739, ITL. 0972692, MEX. 0128581, NZL. 0169420, PTG. 0058386, SAF. 0729029, STZ. 0553435, SWD. 7216596.
3,792,913.—XEROGRAPHIC ERASE MECHANISM. FEB. 19, 1974. GRB. 1422175.
3,811,048.—ELECTROPHOTOGRAPHIC CHARGING APPARATUS. MAY 14, 1974.
3,967,119.—CORONA CHARGING DEVICE. JUNE 29, 1976.
3,967,891.—IMAGING SYSTEM FOR ELECTROSTATIC REPRODUCTION MACHINE. JULY 6, 1976.
4,087,168.—CHARGING SYSTEM FOR ELECTROSTATIC REPRODUCTION MACHINE. APR. 2, 1978.

Class 3C 7

3,323,373.—ESCAPEMENT MECHANISM. JUNE 6, 1967. CAN. 0841310.
3,324,291.—CORONA GENERATING DEVICE W/MEANS TO CAUSE AIR FLOW THERE-THROUGH TO MAINTN PARTS FREE OF DUST. JUNE 6, 1967. CAN. 0794904, GRB. 1070615, JAP. 0512648.
3,339,069.—CORONA CHARGING DEVICE W/MEANS TO PREVENT TONER DUST CONTAMINATION. AUG. 29, 1967. CAN. 0788539, FRA. 1450010, GRB. 1116687, ITL. 0730715, JAP. 0875339, MEX. 0089459.
3,496,352.—SELF-CLEANING CORONA GENERATING APPARATUS. FEB. 17, 1970. CAN. 0856356, GRB. 1227987, JAP. 0641478.
3,743,540.—SURFACE CLEANING BY IONIZED FLOW. JULY 3, 1973.
3,794,839.—CORONA GENERATING APPARATUS. FEB. 26, 1974. GRB. 1434863.
3,942,006.—CORONA GENERATOR CLEANING APPARATUS. MAR. 2, 1976.
3,965,400.—CORONA GENERATING DEVICE WITH IMPROVED BUILT IN CLEANING MECHANISM. JUNE 22, 1976.
4,019,055.—CORONA CLEANING ASSEMBLY. APR. 19, 1977. BEL. 0795870, GRB. 1416480.

Class 3C 8

3,335,273.—XIC CHARGING APPARATUS W/MEANS TO TERMINATE CHARGING CYCLE WHEN A PREDETERMINED CHARGE IS OBTAI. AUG. 8, 1967. CAN. 0794905, FRA. 1462556, GRB. 1128618, ITL. 0743940, JAP. 0632530, MEX. 0087314.
3,335,275.—XIC CHARGNG APPTS W/ADJSTBL MEANS TO TERMINATE CHRGNG CYCLE WHEN PRE-DETERMINED CHARGE IS OBTAI. AUG. 8, 1967. CAN. 0801833.
3,667,036.—ELECTROMETER AMPLIFIER CIRCUITS. MAY 30, 1972.
3,678,350.—ELECTRIC CHARGING METHOD. JULY 18, 1972.
3,805,069.—REGULATED CORONA GENERATOR. APR. 16, 1974.
3,934,141.—APPARATUS FOR AUTOMATICALLY REGULATING THE AMOUNT OF CHARGE APPLIED TO AN INSULATING SURFACE. JAN. 20, 1976.
3,944,356.—A CHARGING APPARATUS. MAR. 16, 1976.
3,980,929.—CORONA CURRENT INTERRUPTER. SEPT. 14, 1976.

Class 3C 9

3,557,367.—METHOD AND APPARATUS FOR INCREASING THE EFFICIENCY OF CORONA CHARGING OF A PHOTOCONDUCTOR. JAN. 19, 1971. ARG. 0170822, BEL. 0720017, BRA. 6800368, CAN. 0879279, FRA. 1597512, GRB. 1244378, ITL. 0840366, JAP. 0628391, MEX. 0105427, VZL. 0023699.
3,582,731.—CHARGING SYSTEM. JUNE 1, 1971. CAN. 0906045.
3,765,026.—ELECTROGRAPHIC RECORDING SYSTEM. OCT. 9, 1973. CAN. 0948272, GRB. 1365346.
4,049,344.—ELECTROSTATIC IMAGING SYSTEM. SEPT. 20, 1977.

Class 3D

3,394,002.—CHARGE TRANSFER WITH LIQUID LAYERS. JULY 23, 1968. CAN. 0840028, GRB. 1126048, JAP. 0524527.
3,398,336.—ELECTRICAL CHARGING UTILIZING TWO PHASE LIQUID MEDIUM. AUG. 20, 1968. CAN. 0815738, GRB. 1149074, JAP. 0562387.
3,687,106.—DONOR APPARATUS AND METHOD. AUG. 29, 1972. ARG. 0185079, BEL. 0753207, CAN. 0911706, FRA. 7027124, GRB. 1314862, ITL. 0900444, JAP. 0733285, MEX. 0117318, PNM. 0002237, VZL. 0027517.
3,907,559.—IMGNG PRCS EMPLYNG FRCTN CHRGNG IN THE PRESENCE OF AN ELECTRICALLY INSULATING DEVELOPER LIQUID. SEPT. 23, 1975.
3,971,658.—IMAGING PROCESS EMPLOYING FRICTION CHARGING IN THE PRESENCE OF AN ELECTRICALLY INSULATING LIQUID. JULY 27, 1976.

Class 3E

3,172,024.—CHARGE INDUCTION. MAR. 2, 1965. CAN. 0809341, FRA. 1294161, GER. 1414991, GRB. 0958663, JAP. 0455338.
3,254,998.—INDUCTION IMAGE FORMATION. JUNE 7, 1966. CAN. 0740576, FRA. 1357220, GER. 1276445, GRB. 1024985, JAP. 0451689.

Class 3F

3,307,034.—TWO-WIRE CORONA DISCHARGE SYSTEM FOR SINGLE-STEP ELECTROSTATIC IMAGE FORMATION. FEB. 28, 1967. CAN. 0768802, FRA. 1416275, GER. 1275864, GRB. 1055416, ITL. 0744235, JAP. 0491997.
3,453,427.—ELEC LAMP FOR UNIFRMLY CHRGNG THE PHOTOCNDCTIVE INSULATNG LAYER OF A XEROGRAPHIC PLATE. JULY 1, 1969.
3,481,669.—PHOTO-CHARGING OF XEROGRAPHIC PLATES. DEC. 2, 1969. AUS. 0420860, BEL. 0705167, CAN. 0814631, FRA. 1541297, GER. 1522683, GRB. 1088073, JAP. 0517512.
3,687,538.—APPARATUS FOR EXPOSING LATENT IMAGE MARGINS IN ELECTROPHOTOGRAPHIC COPYING APPARATUS. AUG. 29, 1972.
3,751,155.—PRE-DEVELOPMENT EXPOSURE ASSEMBLY. AUG. 7, 1973.
3,809,472.—PRE-DEVELOPMENT EXPOSURE ASSEMBLY. MAY 7, 1974. ARG. 0196103, AUS. 0466757, BEL. 0793559, CHL. 0027991, FRA. 7246234, GRB. 1415170, ITL. 0973319, JAP. 0552841, MEX. 0131207, NZL. 0169421, PRU. 0013334, PTG. 0058769, SAF. 0729132, SPN. 0410172, STZ. 0552841, SWD. 7216970.
3,845,307.—COMBINED CORONA AND LUMINESCENT DISCHARGE. OCT. 29, 1974. BEL. 0811310, GRB. 1433663.
3,860,338.—ADJUSTABLE FADEOUT. JAN. 14, 1975. BEL. 0809655.
3,893,419.—BACKGROUND REDUCTION TECHNIQUE. JULY 8, 1975.
3,984,842.—DEVICE FOR CONTINOUS ELECTROSTATIC REPRODUCTION OF AN OPTICAL IMAGE. OCT. 5, 1976.
3,994,000.—DEVICE FOR ELECTROSTATOGRAPHIC REPRODUCTION OF AN OPTICAL IMAGE USING A CHARGE STORAGE GRID. NOV. 23, 1976.
4,005,438.—DEVICE WITH CONTROL GRID FOR ELECTROSTATOGRAPHIC REPRODUCTION OF AN OPTICAL IMAGE. JAN. 25, 1977.

Class 4

4,162,118.—WAVEGUIDE IMAGING SYSTEM. JULY 24, 1979.

Class 4A

3,811,764.—APPARATUS FOR PHOTOELECTROPHORETIC IMAGING USING A PERIODIC ELECTRIC FIELD. MAY 21, 1974.
4,068,950.—VARIABLE PLATEN COVER. JAN. 17, 1978.
4,111,541.—EXPOSURE SYSTEM FOR ELECTROSTATIC REPRODUCTION MACHINES. SEPT. 5, 1978.
4,120,579.—IMAGING SYSTEM FOR A PHOTOCOPYING DEVICE. OCT. 17, 1978.

Class 4A 1

3,330,180.—ILLUMINATION CONTROL SYSTEM. JULY 11, 1967. ARG. 0151653, BRA. 0084295, CAN. 0785137, FRA. 1450157, GER. 1264239, GRB. 1122629, ITL. 0730678, JAP. 0508404, MEX. 0078870.
3,432,231.—EXPOSURE CONTROL DEVICE. MAR. 11, 1969.
3,432,232.—ILLUMINATION SYSTEM. MAR. 11, 1969. CAN. 0846423, JAP. 0534763.
3,487,252.—CESIUM LIGHT SOURCE. DEC. 30, 1969.
3,504,969.—IMAGING APPARATUS. APR. 7, 1970.
3,512,886.—DUAL CARRIAGE SCANNING SYS. MAY 19, 1970. CAN. 0875712, GRB. 1235136.
3,586,849.—ILLUMINATION SYSTEM. JUNE 22, 1971. ARG. 0183139, ATR. 0303522, AUS. 0428629, BEL. 0733400, BRA. 6908480, CAN. 0903730, CHL. 0024870, FRA. 6917011, GRB. 1260688, ITL. 0864185, MEX. 0111515, NOR. 0125954, NZL. 0156507, PNM. 0001430, PRU. 0010320, PTG. 0051752, SAF. 0693689, SPN. 0367616, STZ. 0758269, SWD. 0354924, VZL. 0025067.
3,622,217.—LIGHT PRODUCING SYSTEM. NOV. 23, 1971.
3,733,599.—TRIGGERING APPARATUS FOR A FLASH LAMP. MAY 15, 1973. CAN. 0937281, GRB. 1361073.
3,746,442.—ELECTROPHOTOGRAPHIC IMAGING APPARATUS. JULY 17, 1973.
3,767,956.—APERTURE FLUORESCENT LAMP FOR COPYING MACHINES. OCT. 23, 1973.
3,777,135.—ILLUMINATION SYSTEM. DEC. 4, 1973.
3,779,640.—HEATING APPARATUS FOR SCAN LAMP. DEC. 18, 1973. ITL. 0995677.
3,781,585.—LIGHT PRODUCING SYSTEM. DEC. 25, 1973.
3,824,013.—LIGHT SOURCE ALIGNMENT DEVICE. JULY 16, 1974.
3,851,201.—LAMP ASSEMBLY. NOV. 26, 1974.
3,868,182.—LAMP ASSEMBLY. FEB. 25, 1975.
3,869,205.—ILLUMINATION SOURCE FOR XEROGRAPHIC EXPOSURE. MAR. 4, 1975.
3,881,817.—OPTICAL ALIGNMENT SYSTEM FOR AN ORIGINAL DOCUMENT. MAY 6, 1975. CAN. 3881817.
3,893,754.—COMBINATION PARABOLOID-ELLIPSOID MIRROR SYSTEM. JULY 8, 1975.
3,904,290.—OPTICAL SYSTEM ALIGNMENT APPARATUS. SEPT. 9, 1975.
3,909,254.—LASER RECORDING METHOD. SEPT. 30, 1975.
3,914,649.—PULSED METAL OR METAL HALIDE LAMPS FOR PHOTOCOPYING APPLICATIONS. OCT. 21, 1975.
3,961,222.—SODIUM VAPOR LAMP CONFIGURATION. JUNE 1, 1976.
3,967,893.—AN ILLUMINATING APPARATUS. JULY 6, 1976.
3,983,441.—MULTIPLE PINCH INCANDESCENT LAMP. SEPT. 28, 1976.
3,992,108.—OPTICAL SYSTEM ALIGNMENT APPARATUS. NOV. 16, 1976.
3,998,539.—AN ILLUMINATION SYSTEM. DEC. 21, 1976.
4,005,332.—EFFICIENT DC OPERATED FLUORESCENT LAMPS. JAN. 25, 1977.
4,005,940.—OPTICAL SYSTEM ALIGNMENT APPARATUS. FEB. 1, 1977.
4,071,798.—SODIUM VAPOR LAMP WITH EMISSION APERTURE. JAN. 31, 1978.
4,071,799.—SODIUM VAPOR LAMP WITH EMISSION APERTURE. JAN. 31, 1978.
4,072,417.—EXPOSURE DEVICE FOR A XEROGRAPHIC COPYING MACHINE. FEB. 7, 1978.
4,080,545.—SODIUM VAPOR LAMP. MAR. 21, 1978.
4,086,010.—ILLUMINATION SYSTEM UTILIZING TWO OPPOSING DC LAMPS WITH AN OPTIMUM BARREL-SHAPED SLIT. APR. 25, 1978.
4,113,379.—ILLUMINATION APPARATUS FOR ELECTRONIC COPYING MACHINES. SEPT. 12, 1978.
4,128,332.—ILLUMINATOR. DEC. 5, 1978. GRB. 1494424.
4,140,385.—LOW PRESSURE METAL OR METAL HALIDE LAMPS FOR PHOTOCOPYING APPLICATIONS. FEB. 20, 1979.
4,190,355.—FACETTED REFLECTION. FEB. 26, 1980. BEL. 875979.
4,218,127.—SCANNING CARRIAGE DRIVE SYSTEM. AUG. 19, 1980.
4,250,538.—A FULL FRAME FLASH ILLUMINATION SYSTEM UTILIZING A DIFFUSE INTEGRATING OPTICAL CAVITY. FEB. 10, 1981.
4,255,046.—VARIABLE OUTPUT POWER SUPPLY FOR FLASH UNIT. MAR. 10, 1981.

Class 4A 2

3,381,573.—SCANNING ATTACHMENT. MAY 7, 1968. CAN. 0820036, GER. 1945460, GRB. 1134645, JAP. 0524529.
3,524,704.—MULTI-LENGTH DOCUMENT RECORDING APPARATUS. AUG. 18, 1970.
3,888,581.—SEMI-AUTOMATIC DOCUMENT HANDLER. JUNE 10, 1975.

3,888,582.—SEMI-AUTOMATIC DOCUMENT HANDLER. JUNE 10, 1975.
3,888,584.—SEMI-AUTOMATIC DOCUMENT HANDLER. JUNE 10, 1975.
3,888,585.—SEMI-AUTOMATIC DOCUMENT HANDLER. JUNE 10, 1975.
3,901,594.—SEMI-AUTOMATIC DOCUMENT HANDLER. AUG. 26, 1975.
3,930,724.—MASKING APPARATUS FOR A MULTI-COLOR ELECTROPHOTOGRAPHIC PRINTING MACHINE. JAN. 6, 1976.

Class 4A 2A

3,560,089.—PLATEN COVER. FEB. 2, 1971. BEL. 0736415, CAN. 0910104, FRA. 0024759, GRB. 1245543, ITL. 8691460, JAP. 0674392.
3,560,090.—PLATEN COVER. FEB. 2, 1971. CAN. 0910103.
3,615,134.—COUNTERBALANCED AND SELF-CLOSING PLATEN COVER. OCT. 26, 1971. ARG. 0185533, AUS. 0449673, BEL. 0756482, CAN. 0921744, CHL. 0025836, EGR. 0084323, FRA. 7035445, GRB. 1318753, GUA. 0002610, ITL. 0908279, MEX. 0116804, PLD. P143518, PNM. 0002181, SPN. 0384046, STZ. 0515525, TIW. 0006830, USR. 0439097.
3,642,371.—PLATEN COVER FOR COPYING MACHINE. FEB. 15, 1972. ARG. 0189873, BEL. 0768991, CAN. 0938485, FRA. 7124554, ITL. 0932443.
3,642,376.—REMOVABLE PLATEN COVER. FEB. 15, 1972. CAN. 0926919.
3,685,905.—COMBINED DOCUMENT FEED AND BOOK COPYING APPARATUS. AUG. 22, 1972. ARG. 0189167, BEL. 0782370, CAN. 0954579, FRA. 7214327, GRB. 1382646, ITL. 0959701, MEX. 0127002, VZL. 30688.
3,788,737.—LUMINESCENT COVER. JAN. 29, 1974. FRA. 7336535.
3,813,161.—PLATEN COVER. MAY 28, 1974.
3,860,338.—ADJUSTABLE FADEOUT. JAN. 14, 1975. BEL. 0809655.
3,914,043.—COLOR ACCENTING COPYING MACHINE. OCT. 21, 1975.
3,914,049.—OPTICAL SCANNING SYSTEM. OCT. 21, 1975. BEL. 0815416.
3,930,466.—SEGMENTED GATE DEVELOPER FLOW CONTROLLER. JAN. 6, 1976.
3,936,172.—LIQUID CRYSTALLINE PLATEN FOR AN ELECTROPHOTOGRAPHIC PRINTING MACHINE. FEB. 3, 1976.
3,997,265.—PLATEN COVER. DEC. 14, 1976.
4,045,218.—METHOD FOR ELECTROSTATICALLY PRODUCING A COLOR ACCENTED PHOTOCOPY. AUG. 30, 1977.
4,072,418.—DEVICE FOR PREVENTING MOVEMENT OF AN ORIGINAL DOCUMENT ON A RECIPROCATING COPIER PLATEN. FEB. 7, 1978.
4,111,540.—FIELD LENS FOR AN ELECTROPHOTOGRAPHIC PRINTING MACHINE. SEPT. 5, 1978.
4,118,119.—FACETTED EDGE FADEOUT REFLECTOR. OCT. 3, 1978.

Class 4A 3

3,432,232.—ILLUMINATION SYSTEM. MAR. 11, 1969. CAN. 0846423, JAP. 0534763.
3,600,610.—TIME DELAY CIRCUIT FOR A RADIANT ENERGY PROTECTIVE APPARATUS. AUG. 17, 1971.
3,672,759.—ILLUMINATION CONTROL SYSTEM. JUNE 27, 1972.
3,775,008.—OPTICAL SCANNING APPARATUS. NOV. 27, 1973.
3,829,209.—IMAGE REGISTRATION IN A MULTIPLE MAGNIFICATION PHOTOCOPY INH SYSTEM. AUG. 13, 1974. ARG. 0194481, BEL. 0784522, CAN. 0988146, FRA. 7220688, GRB. 1397446, ITL. 0956415, MEX. 0128160, SPN. 403.700, STZ. 0563605, SWD. 7207535.
3,926,518.—OPTICAL SCANNING SYSTEM. DEC. 16, 1975.
3,947,117.—EXPOSURE CONTROL SYSTEM. MAR. 30, 1976.
3,975,289.—CHARGE TRANSFER COMPLEXE OF FERRONCENES HAVING LIGHT FILLING PROPERTIES. AUG. 17, 1976.
3,995,954.—EXPOSURE SYSTEM. DEC. 7, 1976.
4,025,341.—CHARGE TRANSFER OF FERROCENES HAVING LIGHT FILTERING PROPERTIES. MAY 24, 1977.
4,080,071.—EXPOSURE DEVICE OF A COPYING MACHINE. MAR. 21, 1978.
4,098,552.—COPYING MACHINE. JULY 4, 1978.
4,101,807.—METHOD AND APPARATUS FOR CONTROLLING THE TEMPERATURE OF LOW PRESSURE METAL OR METAL HALIDE. JULY 18, 1978.
4,272,188.—EXPOSURE COMPENSATION CIRCUIT FOR A COPIER. JUNE 9, 1981.

Class 4B

3,912,387.—ELECTROSTATOGRAPHY. OCT. 14, 1975.
3,967,894.—A SCREENED OPTICAL SYSTEM. JULY 6, 1976.
3,967,895.—ILLUMINATION CONTROL SYSTEM. JULY 6, 1976.
3,981,577.—AN OPTICAL SYSTEM FOR AN ELECTROPHOTOGRAPHIC PRINTING MACHINE. SEPT. 21, 1976.
3,994,723.—ELECTROPHOTOGRAPHIC PROCESS INVOLVING STEP OF SUBSEQUENT DISCHARGE OF AREAS RECEIVING INSUFFICIENT. NOV. 30, 1976.
4,134,671.—INTERSECTING OPTICAL AND COPY SHEET PATH METHOD AND APPARATUS. JAN. 16, 1979.

Class 4B 1

3,221,622.—OPTICAL SCANNING SYSTEM. DEC. 7, 1965. ADN. 0000471, ARG. 0150818, ATR. 0267325, AUS. 0402541, BEL. 0657557, BRS. 00J3737, BRU. 0000469, CAN. 0756354, EIR. 0028649, FIJ. 0000342, FIN. 0045258, FRA. 1420763, GER. 1497089, GHA. 0000994, GIB. 1089536, GIE. 0006969, GRB. 1089536, GRK. 0029663, GUR. 1089536, HGK. 0009169, HOL. 0146615, ISR. 0022618, ITL. 0742392, JAP. 0599246, JER. 000P96, KEN. 0001744, LXB. 0047657, MAU. 1927571, MLS. 0015069, NIG. 0001619, NOR. 0118726, NZL. 0140371, PTG. 0043364, SAF. 0646113, SBH. 0005269, SGP. 0008269, SHL. 0000017, SLN. 2677286, SPN. 0307501, SRK. 0000389, STZ. 0450920, SWD. 0338716, UGD. 0000269.
3,318,186.—OPTICAL SYSTEM FOR REPRODUCTION MACHINES. MAY 9, 1967. CAN. 0798356, FRA. 1467332, GRB. 1139231, ITL. 0758313, JAP. 0512656, MEX. 0085288, SWD. 6912062.
3,381,573.—SCANNING ATTACHMENT. MAY 7, 1968. CAN. 0820036, GER. 1945460, GRB. 1134645, JAP. 0524529.
3,405,564.—PULLEY. OCT. 15, 1968. CAN. 0850353.
3,454,335.—SCANNING SYSTEM. JULY 8, 1969. BEL. 0708647, CAN. 0853453, FRA. 1549127, GRB. 1207850, ITL. 0819656, JAP. 0591210.
3,484,163.—SCANNING SYSTEM. DEC. 16, 1969. CAN. 0840630.
3,504,969.—IMAGING APPARATUS. APR. 7, 1970.
3,512,886.—DUAL CARRIAGE SCANNING SYS. MAY 19, 1970. CAN. 0875712, GRB. 1235136.
3,523,725.—XEROGRAPHIC REPRODUCING APPARATUS. AUG. 11, 1970. CAN. 0917730, GRB. 1271862.
3,532,425.—GRAPHIC DISTORTION APPARATUS. OCT. 6, 1970.
3,552,221.—SPEED CONVERTING MECHANISM. JAN. 5, 1971.
3,591,277.—XEROGRAPHIC REPRODUCING APPARATUS. JULY 6, 1971. AUS. 0428584, BEL. 0723949, CAN. 0869628, CZC. 0157352, FRA. 1591801, GER. 0989774, GRB. 1223429, ITL. 0856815, SWD. 0348060, USR. 0465805.
3,612,679.—SCANNING APPARATUS. OCT. 12, 1971. GRB. 1307918.
3,671,237.—METHOD FOR PRODUCING IMAGES. JUNE 20, 1972. CAN. 0886492, GRB. 1317043.
3,794,418.—IMAGING SYSTEM. FEB. 26, 1974.
3,832,057.—SCANNING APPARATUS. AUG. 27, 1974. GRB. 1417255.
3,858,976.—OPTICAL SCANNING SYSTEM. JAN. 7, 1975.
3,869,204.—SCANNING OPTICAL SYSTEM. MAR. 4, 1975. BEL. 0815215.
3,905,247.—CLUTCHES. SEPT. 16, 1975.
3,918,806.—DASHPOT FOR COPIER OPTICAL SCANNING. NOV. 11, 1975.
3,936,173.—OPTICAL SYSTEM. FEB. 3, 1976.
3,948,374.—CLUTCHES. APR. 6, 1976.
3,950,091.—APPARATUS FOR CONTROLLING MOVEMENT OF A CARRIAGE. APR. 13, 1976.
3,973,825.—FLAT FIELD SCANNING SYSTEM. AUG. 10, 1976. BEL. 0836735.
3,989,369.—SCANNING MECHANISM FOR A COPYING APPARATUS. NOV. 2, 1976.
4,027,961.—COPIER/RASTER SCAN APPARATUS. JUNE 7, 1977.
4,032,231.—MULTIPLE RANGE VARIABLE MAGNIFICATION REPRODUCTION MACHINE USING THREE-DIMENSIONAL CAM. JUNE 28, 1977. BEL. 0843419.
4,054,359.—APPARATUS FOR SYNCHRONOUSLY SCANNING A FLAT PLATEN WITH A ROTATING MIRROR USING PULLEYS. OCT. 18, 1977.
4,066,353.—HALF TONE IMAGING SYSTEM. JAN. 3, 1978.

4,067,640.—APPARATUS FOR SYNCHRONOUSLY SCANNING A FLAT PLATEN WITH A ROTATING MIRROR. JAN. 10, 1978.
4,068,940.—VARIABLE CONTRAST OPTICAL SCREENING SYSTEM. JAN. 17, 1978.
4,068,950.—VARIABLE PLATEN COVER. JAN. 17, 1978.
4,070,089.—TWO DIMENSIONAL LASER SCANNER WITH MOVABLE CYLINDER LENS. JAN. 24, 1978.
4,093,374.—MULTIPLE RANGE VARIABLE MAGNIFICATION REPRODUCTION MACHINE. JUNE 6, 1978. BEL. 843419, GRB. 1500877, SPN. 449267.
4,095,880.—EXTENDED RANGE VARIABLE MAGNIFICATION REPRODUCTION MACHINE. JUNE 20, 1978. BEL. 843419, GRB. 1500877, SPN. 449267.
4,143,311.—HYSTERESIS SYNCHRONOUS MOTOR RATE SERVO SYSTEM. MAR. 6, 1979.
4,161,359.—APPARATUS FOR SYNCHRONIZING MOVEMENT BETWEEN AN OPTICAL SCANNING SYSTEM AND AN IMAGING MEMBER. JULY 17, 1979.
4,232,960.—SCANNING SYSTEM. NOV. 11, 1980.

Class 4B 1A

3,330,190.—PRINTING APPARATUS. JULY 11, 1967. CAN. 0758791, GER. 1280282, GRB. 1102419, JAP. 0529726.
3,438,704.—ILLUMINATION CONTROL SYSTEM. APR. 15, 1969. CAN. 0865838, GRB. 1209473, JAP. 1002842.
3,485,546.—FIELD FLATTENER SCANNING MEANS. DEC. 23, 1969. CAN. 0850916, GRB. 1196373, JAP. 0667705.
3,504,960.—SAGITTAL RAY APERTURE STOP. APR. 7, 1970. AUS. 0413558, BEL. 0704924, CAN. 0849815, FRA. 1540700, GRB. 1209472, ITL. 0814606, JAP. 0972613.
3,524,704.—MULTI-LENGTH DOCUMENT RECORDING APPARATUS. AUG. 18, 1970.
3,542,467.—XEROGRAPHIC REPRODUCING APPARATUS. NOV. 24, 1970. ARG. 0180116, AUS. 0442029, BEL. 0731552, BRA. 6908056, CAN. 0877451, FRA. 6911558, GRB. 1257103, ITL. 0857659, JAP. 0668806, MEX. 0108892, SPN. 0366056, SWD. 0346397, VZL. 0023746.
3,592,531.—SPLIT DAGOR-TYPE OF SYMMETRICAL COPYING LENS SYSTEM. JULY 13, 1971. CAN. 0929389.
3,640,615.—XEROGRAPHIC REPRODUCING APPARATUS. FEB. 8, 1972. ARG. 0174792, AUS. 0428440, BEL. 0723948, CAN. 0884439, FRA. 1596660, GRB. 1223428, ITL. 0847541, JAP. 0992414, MEX. 0108966, PNM. 0001806, SPN. 0360210, SWD. 0352456, VZL. 0023711.
3,652,157.—MICROFILM PROJECTION APPARATUS. MAR. 28, 1972. CAN. 0937797, GRB. 1324097.
3,655,284.—LONGITUDINALLY INSENSITIVE LENS STRIP IMAGING DEVICE. APR. 11, 1972.
3,670,633.—RECORDING APPARATUS. JUNE 20, 1972.
3,778,147.—ELECTROSTATIC REPRODUCTION MACHINE HAVING SLEECTSBLE MAGNIFICATION-RATIOS. DEC. 11, 1973. CAN. 989464.
3,788,740.—IMAGING SYSTEM. JAN. 29, 1974.
3,975,289.—CHARGE TRANSFER COMPLEXEX OF FERRONCENES HAVING LIGHT FILLING PROPERTIES. AUG. 17, 1976.
3,994,580.—OPTICAL SYSTEM FOR SCANNING DURING RECIPROCAL MOTION. NOV. 30, 1976.
4,008,958.—OPTICAL SYSTEM FOR EFFECTED IMAGE ROTATION. FEB. 22, 1977.
4,025,541.—CHARGE TRANSFER OF FERROCENES HAVING LIGHT FILTERING PROPERTIES. MAY 24, 1977.
4,029,409.—MULTI-MODE OPTICAL SCANNING SYSTEM. JUNE 14, 1977. BEL. 0843153, HAT. 0001524.
4,088,401.—OPTICAL SYSTEM FOR ALTERNATIVELY PROJECTING ADJACENT IMAGES OF ADJACENT OBJECTS OR DOUBLE L MAY 9, 1978.
4,103,991.—OPTICAL SYSTEM FOR SCANNING DURING RECIPROCAL MOTION PROVIDING 180 ROTATION OF IMAGE. AUG. 1, 1978.
4,134,670.—HIGH CAPACITY PHOTOCOPY OPTICAL SCANNING SYSTEM. JAN. 16, 1979.
4,195,928.—TWO DIRECTION SCAN SORTING TECHNIQUE. APR. 1, 1980.
4,241,990.—MULTI-PURPOSE OPTICAL DATA PROCESSOR. DEC. 30, 1980.
4,241,990.—MULTI-PURPOSE OPTICAL DATA PROCESSOR. DEC. 30, 1980.
4,227,795.—HALF-TONE IMAGING SYSTEM. OCT. 14, 1980.

Class 4B 1A 1

3,544,190.—LENS STRIP OPTICAL SCANNING SYSTEM. DEC. 1, 1970. CAN. 0904070, GRB. 1278336.
3,584,950.—LENS STRIP OPTICAL SCANNING SYSTEM. JUNE 15, 1971.
3,584,952.—LENS STRIP OPTICAL SCANNING SYSTEM - REISSUED D 2074R. JUNE 15, 1971.
3,584,953.—SHORT FOCAL OPTICAL LENGTH SCANNING SYSTEM. JUNE 15, 1971.
3,650,621.—OPTICAL IMAGING SYSTEM. MAR. 21, 1972. BEL. 0747978, CAN. 0927470, FRA. 7011548, GRB. 1297907, ITL. 0898936, JAP. 0731225.
3,881,369.—BI-AXIAL POSITIONER. MAY 6, 1975.
3,912,392.—SHORT FOCAL LENGTH OPTICAL SCANNING SYSTEM. OCT. 14, 1975.

Class 4B 1A 2

3,496,846.—SCRIPTWRITER USING FIBER OPTIC BUNDLE. FEB. 24, 1970.
3,560,085.—APPARATUS FOR GRAPHIC DISTORATION. FEB. 2, 1971.
3,681,777.—RECORDING APPARATUS. AUG. 1, 1972.

Class 4B 1A 3

3,497,296.—XEROGRAPHIC EXPOSURE APPARATUS. FEB. 24, 1970.
3,535,036.—APPARATUS FOR FORMING HALF-TONE LINE SCREEN WITH A LENS. OCT. 20, 1970. CAN. 0909309, GRB. 1253887.
3,540,806.—HALF TONING METH AND APPARATUS FOR SOLID AREA COVERAG. NOV. 17, 1970. CAN. 0892754, GRB. 1253888.
3,580,671.—EXPOSURE APPARATUS. MAY 25, 1971. CAN. 0912104, GRB. 1276010.
3,905,822.—COMPOUND SCREEN FOR OBJECT SCREENING. SEPT. 16, 1975.
3,912,510.—ELECTROPHOTOGRAPHIC PROCESS EMPLOYING A COMPOUND DOCUMENT SCREEN. OCT. 14, 1975.
3,914,040.—REVERSIBLE SCREEN FOR ELECTROPHOTOGRAPHIC PRINTING. OCT. 21, 1975.
3,958,877.—HALF-TONE SCREEN WITH CLEANING MEANS FOR AN ELECTROPHOTOGRAPHIC PRINTING MACHINE. MAY 25, 1976.
3,961,847.—AN ARCUATE SCREEN FOR AN ELECTROPHOTOGRAPHIC PRINTING MACHINE. JUNE 8, 1976.
3,961,848.—AN ELECTROPHOTOGRAPHIC PRINTING MACHINE WITH HALFTONE SCREEN CLEANING. JUNE 8, 1976.
3,963,342.—CURVED SCREEN. JUNE 15; 1976.
3,973,953.—IMAGING METHOD INCLUDING EXPOSURE OF PHOTOCONDUCTIVE IMAGING MEMBER THROUGH LENTICULAR LENS ELE. AUG. 10, 1976. STZ. 0557051.
3,973,954.—IMAGING METHOD INCLUDING EXPOSURE OF PHOTOCONDUCTIVE IMAGING MEMBER THROUGH LENTICULAR LENS ELE. AUG. 10, 1976. STZ. 0557051.
3,973,957.—IMAGING METHOD INCLUDING EXPOSURE OF DEFORMATION IMAGING MEMBER THROUGH LENTICULAR LENS ELEMENT. AUG. 10, 1976.
3,973,958.—IMAGING METHOD INCLUDING EXPOSURE OF DEFORMATION IMAGING MEMBER THROUGH LENTICULAR ELEMENT. AUG. 10, 1976.
4,003,649.—ELECTROPHOTOGRAPHIC HALFTONE PRINTING MACHINE EMPLOYING A PHASE SCREEN. JAN. 18, 1977.
4,007,981.—DUAL MODE ELECTROSTATOGRAPHIC PRINTING MACHINE. FEB. 15, 1977.
4,012,137.—AN OPTICAL SYSTEM HAVING A ROTATING SCREEN. MAR. 15, 1977.
4,013,355.—NOTCH FILTER FOR COLOR TRANSPARENCY COPYING MACHINES. MAR. 22, 1977.
4,014,030.—HALF-TONE IMAGING WITH FLYING SPOT SCANNER SYSTEM. MAR. 22, 1977.
4,014,607.—REMOVABLE SCREENING SYSTEM FOR A TRANSPARENCY REPRODUCTION MACHINE. MAR. 29, 1977.
4,025,181.—A SCREEN CLEANING DEVICE. MAY 24, 1977.
4,035,070.—APPARATUS AND METHOD FOR OPTICAL GENERATION OF A STRUCTURED CHARGE-DISCHARGE PATTERN ON A PHOTO. JULY 12, 1977.
4,047,810.—DUAL MODE COPYING MACHINE. SEPT. 13, 1977.
4,072,414.—SCREEN FOR AN ELECTROPHOTOGRAPHIC PRINTING MACHINE. FEB. 7, 1978.
4,080,055.—A HALF-TONE COLOR COPIER. MAR. 21, 1978.
4,083,632.—MULTI FREQUENCY SCREEN. APR. 11, 1978.
4,090,786.—MULTI-COLOR SCREEN FOR ELECTROPHOTOGRAPHIC PRINTING. MAY 23, 1978.

4,095,889.—EXPOSURE SYSTEM FOR AN ELECTROPHOTOGRAPHIC PRINTING MACHINE. JUNE 20, 1978.
4,108,654.—COLOR ELECTROPHOTOGRAPHIC PROCESS EMPLOYING A DOCUMENT SCREEN. AUG. 22, 1978. FRA. 7514227, GRB. 1490898.
4,111,542.—COLLATING SYSTEM FOR OPAQUE DOCUMENTS AND SLIDE REPRODUCTIONS. SEPT. 5, 1978.
4,130,841.—VARIABLE FREQUENCY HALF-TONE IMAGING APPARATUS. DEC. 19, 1978.

Class 4B 1A 4

3,424,525.—MICROFILM COPIER ATTACHMENT. JAN. 28, 1969.
3,542,468.—MICROFILM ENLARGER-COPIER - MICROFILM ATTACHMENT. NOV. 24, 1970. CAN. 0858250.
3,547,533.—MICROFILM REPRODUCTION MACHINE. DEC. 15, 1970. BEL. 0689227, CAN. 0891072, FRA. 1498788, GRB. 1160904, ITL. 0794772, MEX. 0095144.
4,046,473.—PHOTORECEPTOR METHOD AND SYSTEM. SEPT. 6, 1977.

Class 4B 2

3,220,324.—PHOTOCONDUCTIVELY CONTROLLED CORONA CHARGING. NOV. 30, 1965. CAN. 0710976, GER. 1243967, GRB. 1034009, JAP. 0651092.
3,254,998.—INDUCTION IMAGE FORMATION. JUNE 7, 1966. CAN. 0740576, FRA. 1357220, GER. 1276445, GRB. 1024985, JAP. 0451689.
3,307,034.—TWO-WIRE CORONA DISCHARGE SYSTEM FOR SINGLE-STEP ELECTROSTATIC IMAGE FORMATION. FEB. 28, 1967. CAN. 0768802, FRA. 1416275, GER. 1275864, GRB. 1055416, ITL. 0744235, JAP. 0491997.
3,394,002.—CHARGE TRANSFER WITH LIQUID LAYERS. JULY 23, 1968. CAN. 0840028, GRB. 1126048, JAP. 0524527.
3,698,807.—DISPLAYING AND PRINTING APPARATUS. OCT. 17, 1972. CAN. 0963521, GRB. 1376814.

Class 4B 3

3,283,651.—INFORMATION ENCODING DEVICE. NOV. 8, 1966. CAN. 0859923, GRB. 1096645, JAP. 0547197.
3,532,425.—GRAPHIC DISTORTION APPARATUS. OCT. 6, 1970.
3,560,085.—APPARATUS FOR GRAPHIC DISTORATION. FEB. 2, 1971.
3,584,950.—LENS STRIP OPTICAL SCANNING SYSTEM. JUNE 15, 1971.
3,584,953.—SHORT FOCAL OPTICAL LENGTH SCANNING SYSTEM. JUNE 15, 1971.
3,725,059.—METHOD OF CLEANING AN ELECTROSTATOGRAPHIC SURFACE. APR. 3, 1973. GRB. 1337282.
3,862,801.—METHOD OF CLEANING AN ELECTROSTATOGRAPHIC IMAGING SURFACE. JAN. 28, 1975. GRB. 1337282.
4,066,353.—HALF TONE IMAGING SYSTEM. JAN. 3, 1978.
4,068,940.—VARIABLE CONTRAST OPTICAL SCREENING SYSTEM. JAN. 17, 1978.
4,246,614.—BINARY GRAPHIC PRINTER SYSTEM HAVING AN ELECTRONIC SCREEN WITH SHIFT CONTROL SUITED FOR RESCREENING. JAN. 20, 1981.

Class 4B 4

3,283,651.—INFORMATION ENCODING DEVICE. NOV. 8, 1966. CAN. 0859923, GRB. 1096645, JAP. 0547197.
3,432,231.—EXPOSURE CONTROL DEVICE. MAR. 11, 1969.
3,473,455.—EXPOSURE REGISTRATION APPARATUS. OCT. 21, 1969.
3,521,950.—XEROGRAPHIC REPRODUCING APPARATUS. JULY 28, 1970. ARG. 0184148, ATR. 0317675, AUS. 0441739, BEL. 0713876, CAN. 0877511, CHL. 0024535, DNK. 0129304, FRA. 1558225, GRB. 1231622, GRK. 0037839, IND. 0124668, ISR. 0029824, ITL. 0831700, JAM. 0001853, JAP. 0774498, LXB. 0055912, MEX. 0102085, NOR. 0131313, NZL. 0159801, PRU. 0009366, PTG. 0049474, SAF. 68/2518, SPN. 0352885, STZ. 0505015, SWD. 7012263, UAR. 0008668, URG. 0009239, VZL. 0025077.
3,586,849.—ILLUMINATION SYSTEM. JUNE 22, 1971. ARG. 0183139, ATR. 0303522, AUS. 0428629, BEL. 0733400, BRA. 6908480, CAN. 0903730, CHL. 0024870, FRA. 6917011, GRB. 1260688, ITL. 0864185, MEX. 0111515, NOR. 0125954, NZL. 0156507, PNM. 0001430, PRU. 0010320, PTG. 0051752, SAF. 0693689, SPN. 0367616, STZ. 0758269, SWD. 0354924, VZL. 0025067.
3,697,160.—CONTINUOUS IMAGING APPARATUS. OCT. 10, 1972.
3,995,950.—EXPOSURE SYSTEM FOR ELECTROSTATIC MACHINES. DEC. 7, 1976.
4,111,541.—EXPOSURE SYSTEM FOR ELECTROSTATIC REPRODUCTION MACHINES. SEPT. 5, 1978.
4,236,809.—LOW RESOLUTION CORRECTION APPARATUS AND METHOD FOR ELECTROPHOTOGRAPHIC COPIERS. DEC. 2, 1980.

Class 4B 5

3,212,417.—REFLEX EXPOSURE SYSTEM. OCT. 19, 1965. CAN. 0733682, GRB. 1052783, JAP. 0487026.
3,278,302.—PHOSPHORESCENT SCREEN REFLEX. OCT. 11, 1966. CAN. 0748828.

Class 4B 6

3,355,236.—AUTOMATIC OPTICAL CONTROL APPARATUS. NOV. 28, 1967. CAN. 0771917.
3,542,467.—XEROGRAPHIC REPRODUCING APPARATUS. NOV. 24, 1970. ARG. 0180116, AUS. 0442029, BEL. 0731552, BRA. 6908056, CAN. 0877451, FRA. 6911558, GRB. 1257103, ITL. 0857659, JAP. 0668806, MEX. 0108892, SPN. 0366056, SWD. 0346397, VZL. 0023746.
3,765,027.—ION LENS RECORDING SYSTEM. OCT. 9, 1973.
3,848,996.—PHOTOCOMPOSING APPARATUS. NOV. 19, 1974. BEL. 0815043.
3,901,585.—ZOOM LENS ASSEMBLY. AUG. 26, 1975. GRB. 1443481.
3,909,103.—LENS SCAN MECHANISM. SEPT. 30, 1975.
3,947,188.—VARIABLE CONJUGATE OPTICAL SYSTEM. MAR. 30, 1976.
3,967,896.—VARIABLE EDGE FADEOUT APP FOR ELECTROSTATIC REPRODUCTION MACHINE. JULY 6, 1976.
3,998,540.—REPOSITIONING SYSTEM FOR VIEWING AND PROJECTION ELEMENTS OF A REPRODUCING APPARATUS. DEC. 21, 1976.
4,013,361.—OPTICAL APP AND REPRODUCING MACHINE. MAR. 22, 1977. BEL. 0843158.
4,027,963.—MULTI-MODE REPRODUCING APPARATUS. JUNE 7, 1977. BEL. 0843154, HAT. 0001534.
4,029,411.—VARIABLE MAGNIFICATION COPIER. JUNE 14, 1977. BEL. 0839792, SPN. 0445641.
4,033,691.—VARIABLE MAGNIFICATION REPRODUCING APPARATUS. JULY 5, 1977.
4,033,692.—MULTI-MODE REPRODUCING MACHINE. JULY 5, 1977. HAT. 0001504.
4,046,467.—ZOOM LENS COPIER. SEPT. 6, 1977.
4,053,221.—MULTI-MODE REPRODUCING APPARATUS. OCT. 11, 1977.
4,060,324.—LENS SWITCHING MECHANISM FOR USE IN COPYING MACHINE. NOV. 29, 1977.
4,076,388.—ZOOM LENS ASSEMBLY. FEB. 28, 1978. GRB. 1443481.
4,076,416.—ILLUMINATION SLIT FOR AND A PROCESS OF USE THEREOF IN A REPRODUCING MACHINE. FEB. 28, 1978. HAT. 1584.
4,076,417.—INTERLOCKING APPARATUS FOR AN OPTICAL SYSTEM AND REPRODUCING MACHINE. FEB. 28, 1978. HAT. 1604.
4,101,213.—ZOOM LENS COPIER. JULY 18, 1978.
4,244,649.—OPTICAL SYSTEM FOR PROVIDING VISUAL AID FOR PROPER MAGNIFICATION SELECTION. JAN. 13, 1981.

Class 4B 6A

3,318,186.—OPTICAL SYSTEM FOR REPRODUCTION MACHINES. MAY 9, 1967. CAN. 0798056, FRA. 1467332, GRB. 1139231, ITL. 0758313, JAP. 0512656, MEX. 0085288, SWD. 6912062.
3,454,335.—SCANNING SYSTEM. JULY 8, 1969. BEL. 0708647, CAN. 0853453, FRA. 1549127, GRB. 1207850, ITL. 0819656, JAP. 0591210.
3,476,478.—APPARATUS FOR CHANGING MAGNIFICATION OF PHOTOCOPIER W/O CHANGING CONJUGATE LENGTH OF OPTICAL SY. NOV. 4, 1969. ARG. 0172460, AUS. 0415808, BEL. 0708650, BRA. 6795668, CAN. 0845405, FRA. 1552364, GER. 1297981, GRB. 1223427, ITL. 0821929, MEX. 0100019, VZL. 0023689.
3,510,219.—OPTICAL ALIGNMENT SYSTEM. MAY 5, 1970. ARG. 0172455, BRA. 6793791, CAN. 0881018, CHL. 0023570, GRB. 1206966, MEX. 0101166, PRU. 0009329, SPN. 0360896, STZ. 0501233, SWD. 0359168, URG. 0008831, VZL. 0025783.
3,521,950.—XEROGRAPHIC REPRODUCING APPARATUS. JULY 28, 1970. ARG. 0184148, ATR. 0317675, AUS. 0441739, BEL. 0713876, CAN. 0877511, CHL. 0024535, DNK. 0129304, FRA. 1558225, GRB. 1231622, GRK. 0037839, IND. 0124668, ISR. 0029824, ITL. 0831700, JAM. 0001853, JAP. 0774498, LXB. 0055912, MEX. 0102085, NOR. 0131313, NZL. 0159801, PRU. 0009366, PTG. 0049474, SAF. 68/2518, SPN. 0352885, STZ. 0505015, SWD. 7012263, UAR. 0008668, URG. 0009239, VZL. 0025077.
3,524,704.—MULTI-LENGTH DOCUMENT RECORDING APPARATUS. AUG. 18, 1970.
3,591,256.—VARIABLE MAGNIFICATION LENS SYSTEM. JULY 6, 1971. BEL. 0731553, CAN. 0881019, FRA. 6911559, GRB. 1234515, ITL. 0857660.
3,591,277.—XEROGRAPHIC REPRODUCING APPARATUS. JULY 6, 1971. AUS. 0428584, BEL. 0723949, CAN. 0869628, CZC. 0157052, FRA. 1591801, GER. 0989774, GRB. 1223429; ITL. 0856815, SWD. 0348060, USR. 0465805.
3,600,066.—OPTICAL ASSEMBLY WITH SUPPLEMENTAL LENS MEANS. AUG. 17, 1971. CAN. 0943792, GRB. 1261159, JAP. 0728824.
3,817,599.—PROJECTION LENS WITH ADD LENS ELEMENTS. JUNE 18, 1974.
3,912,374.—SIX COMPONENT ZOOM LENS. OCT. 14, 1975.
4,047,811.—AVAILABLE LIGHT MARGINAL ILLUMINATION SYSTEM. SEPT. 13, 1977.
4,056,308.—VARIABLE FOCAL LENGTH REFLECTOR LENS SYSTEM. NOV. 1, 1977.
4,057,342.—ILLUMINATION SLIT FOR A REPRODUCING MACHINE. NOV. 8, 1977.
4,061,419.—VARIABLE MAGNIFICATION LENS SYSTEM. DEC. 6, 1977.
4,076,389.—ZOOM LENS MOUNT AND MECHANISM. FEB. 28, 1978.

Class 4B 7

3,470,797.—DISPLAY DEVICE. OCT. 7, 1969.
3,472,136.—CHARACTER GENERATOR. OCT. 14, 1969. CAN. 0884500, GRB. 1191881.
3,473,455.—EXPOSURE REGISTRATION APPARATUS. OCT. 21, 1969.
3,523,725.—XEROGRAPHIC REPRODUCING APPARATUS. AUG. 11, 1970. CAN. 0917730, GRB. 1271862.
3,615,132.—METHOD OF PRINTING MULTIPLE COPIES OF COMPOSITE INFORMATION ON STANDARD SIZE COPY SHEETS. OCT. 26, 1971.
3,620,618.—MULTIPLE INPUT COPYING APPARATUS. NOV. 16, 1971.
3,775,007.—FORMS REPRODUCTION APPARATUS. NOV. 27, 1973.
3,827,062.—OPTICAL ARRANGEMENT FOR HIGH SPEED PRINTOUT SYSTEM. JULY 30, 1974.
4,157,869.—TRANSPARENCY REPRODUCING MACHINE. JUNE 12, 1979.

Class 4C

3,188,208.—SPECTRAL CONTRAST CONTROL IN XEROGRAPHY. JUNE 8, 1965.
3,432,232.—ILLUMINATION SYSTEM. MAR. 11, 1969. CAN. 0846423, JAP. 0534763.
3,438,705.—AUTOMATIC XEROGRAPHIC DEVELOPMENT CONTROL. APR. 15, 1969. GRB. 1207830.
3,852,782.—IMAGING SYSTEM. DEC. 3, 1974.
3,901,189.—MAGNETIC BRUSH DEVELOPING APPARATUS. AUG. 26, 1975.
3,917,393.—VARIOSLIT. NOV. 4, 1975. BEL. 0820132.
3,970,382.—A SPATIALLY SELECTIVE OPTICAL SYSTEM. JULY 20, 1976. FRA. 7421348.
3,975,289.—CHARGE TRANSFER COMPLEXE OF FERRONCENES HAVING LIGHT FILLING PROPERTIES. AUG. 17, 1976.
3,997,259.—APPARATUS FOR REDUCING IMAGE BACKGROUND IN ELECTROSTATIC REPRODUCTION MACHINES. DEC. 14, 1976.
4,007,326.—ELECTRONIC COPY ANALYSIS. FEB. 8, 1977.
4,025,541.—CHARGE TRANSFER OF FERROCENES HAVING LIGHT FILTERING PROPERTIES. MAY 24, 1977.
4,066,351.—VARIABLE ILLUMINATION OPTICAL SYSTEM. JAN. 3, 1978.
4,118,122.—METHOD OF RENDERING OBJECTS UNCOPYABLE BY PHOTOCOPY PROCESSES. OCT. 3, 1978.
4,162,845.—COPIER FOR GREATER THAN STANDARD LENGTH DOCUMENTS. JULY 31, 1979.

Class 5

3,942,266.—METHOD AND APPARATUS FOR FIXING TONER IMAGES. MAR. 9, 1976.

4,043,052.—METHOD AND APPARATUS FOR FIXING TONER IMAGES. AUG. 23, 1977.

Class 5A 1

3,276,426.—CLOSED AEROSOL DEVELOPMENT. OCT. 4, 1966.
3,518,969.—DEVELOPMENT APPARATUS. JULY 7, 1970. CAN. 0852127, GRB. 1259879.
3,791,730.—APPARATUS FOR DEVELOPING ELECTROSTATIC LATENT IMAGES. FEB. 12, 1974.
3,795,443.—XEROGRAPHIC DEVELOPMENT. MAR. 5, 1974. GRB. 1255568, JAP. 0721852.
4,096,826.—MAGNETIC BRUSH DEVELOPMENT SYSTEM FOR FLEXIBLE PHOTORECEPTORS. JUNE 27, 1978.

Class 5A 1A

3,640,246.—DEVELOPMENT APPARATUS FOR LATENT ELECTROSTATIC IMAGE. FEB. 8, 1972. ATR. 0319044, AUS. 0457007, BEL. 0758632, CAN. 0917404, FRA. 7042231, GRB. 1336741, ITL. 0909113, JAP. 0815548, SPN. 0385187, STZ. 0527453, SWD. 0363411, USR. 0505386.
3,646,910.—DEVELOPMENT APPARATUS FOR LATENT ELECTROSTATIC IMAGES. MAR. 7, 1972.
3,924,568.—APPARATUS FOR DEVELOPING LATENT ELECTROSTATIC IMAGES. DEC. 9, 1975. BEL. 0809747, GRB. 1434673.
3,974,796.—DUAL MODE APPARATUS FOR DEVELOPING LATENT ELECTROSTATIC IMAGES. AUG. 17, 1976.
4,033,292.—APPARATUS FOR DEVELOPING LATENT ELECTROSTATIC IMAGES. JULY 5, 1977.

Class 5A 2

3,160,524.—APPARATUS FOR CHARGING POWDER PARTICLES AND APPLYING THE CHARGED PARTICLES TO A RECEIVING MEMBER. DEC. 8, 1964. CAN. 0779861, GRB. 1026457.
3,257,223.—ELECTROSTATIC POWDER CLOUD XEROGRAPHIC DEVELOPMENT METHOD AND APPARATUS. JUNE 21, 1966. CAN. 0756559, GRB. 1028900, JAP. 0460474.
3,284,224.—CONTROLLED XEROGRAPHIC DEVELOPMENT. NOV. 8, 1966. CAN. 0751349, GRB. 1038801, JAP. 0640353.
3,357,403.—POWDER CLOUD DEVELOPMENT APPARATUS. DEC. 12, 1967.
3,470,009.—POWDER CLOUD DEVELOPMENT OF ELECTROSTATIC IMAGES. SEPT. 30, 1969. CAN. 0820240, FRA. 1461941; GRB. 1130452, HOL. 0142253, ITL. 0750148, JAP. 0512653, MEX. 0085176.
3,707,390.—METHOD FOR DEVELOPING ELECTROSTATIC LATENT IMAGES. DEC. 26, 1972.
3,767,446.—DEVELOPMENT METHOD WITH OSCILLATING BRUSH PAD. OCT. 23, 1973.

Class 5A 3

RE.28,183.—POWDER CLOUD. OCT. 1, 1974. ARG. 0119221, BEL. 0764300, CAN. 0939137, FRA. 7110037, GRB. 1351471, ITL. 0921294, MEX. 0119823, VZL. 0032790.
RE.28,193.—POWDER CLOUD XEROGRAPHIC DEVELOPMENT APPARATUS. OCT. 8, 1974. ARG. 0119221, BEL. 0764300, CAN. 0939137, FRA. 7110037, GRB. 1351471, ITL. 0921294, MEX. 0119823, VZL. 0032790.
3,129,850.—POWDER CLOUD GENERATING APPARATUS. APR. 21, 1964. CAN. 0693933, GER. 1497044, GRB. 1001237, JAP. 0436042.
3,648,901.—POWDER CLOUD XEROGRAPHIC DVLMNT APP-REISSUED AS 28183 AND 28193 10/74. MAR. 14, 1972. ARG. 0119221, BEL. 0764300, CAN. 0939137, FRA. 7110037, GRB. 1351471, ITL. 0921294, MEX. 0119823, VZL. 0032790.
3,799,113.—HYBRID DEVELOPMENT OF ELECTROSTATIC LATENT IMAGE. MAR. 26, 1974. CAN. 0980634, GRB. 1411708.
4,057,340.—SINGLE COMPONENT COLOR DEVELOPMENT SYSTEM. NOV. 8, 1977.

Class 5A 3B

3,599,604.—XEROGRAPHIC DEVELOPMENT APPARATUS. AUG. 17, 1971. ARG. 0187552, ATR. 0300574, AUS. 0427548, BEL. 0726572, BUL. 0017289, CAN. 0882577, DNK. 0122194, EGR. 0074431, EIR. 0032989, FRA. 1597322, GRB. 1248671, GRK. 0039920, IND. 0120485, ISR. 0031892, ITL. 0854007, LXB. 0058261, MEX. 0108936, NZL. 0155879, PAK. 0121035, PLP. 0006856, PNM.

0001804, PTG. 0051418, RHD. 1406967, RMN. 0054927, SAF. 0069181, SPN. 0362359, STZ. 0493015, UAR. 0009253, VTM. 0001857, VZL. 0023728.
3,633,544.—TURBO-CLOUD DEVELOPMENT. JAN. 11, 1972. CAN. 0934959, GRB. 1322363, JAP. 0741518.
3,670,701.—TWO STEP ORBITAL PAD DEVELOPMENT. JUNE 20, 1972. CAN. 0092849, GRB. 1313870, JAP. 0743834.
3,882,822.—APPARATUS FOR DEVELOPING ELECTROSTATIC LATENT IMAGE. MAY 13, 1975.

Class 5A 5

3,345,293.—COLORED ELECTROSTATOGRAPHIC TONERS CONTAINING ORGANIC DYE PIGMENTS. CAN. 0834674, GRB. 107147, JAP. 0788652.
3,483,679.—FILTER APPARATUS. DEC. 16, 1969. BEL. 0708648, CAN. 0853503, FRA. 1552363, ITL. 0837050.
3,697,263.—METHOD OF CLEANING RESIDUAL LIQUID DEVELOPER FROM ELECTROPHOTOGRAPHIC PLATES. OCT. 10, 1972. ARG. 0181940, AUS. 0455091, BEL. 0758060, CAN. 0906334, EGR. 0087483, FRA. 7041623, GRB. 1328406, ITL. 0916264, JAP. 0749381, MEX. 0116862, SPN. 0385000, STZ. 0519186, SWD. 0365624, TIW. 0006850, USR. 0349206, VZL. 0032211.
3,924,568.—APPARATUS FOR DEVELOPING LATENT ELECTROSTATIC IMAGES. DEC. 9, 1975. BEL. 0809747, FRA. 7401161, GRB. 1434673, ITL. 1003370.
3,937,570.—CLOUD SUPPRESSION IN AN ELECTROSTATIC COPYING APPARATUS. FEB. 10, 1976. CAN. 0974751, GRB. 1396922.

Class 5B

3,251,706.—XEROGRAPHIC DEVELOPMENT METHOD AND APPARATUS. MAY 17, 1966. CAN. 0629542, FRA. 1120534, GER. 1020234, GRB. 0774433.
3,357,402.—ROTARY BRUSH DEVELOPMENT. DEC. 12, 1967. ARG. 0167329, ATR. 0279354, AUS. 0416581, BEL. 0708497, BRA. 0088306, CAN. 0859029, FRA. 1548189, GER. 1597901, GRB. 1200068, HUN. 0156541, ITL. 0819626, JAP. 0608703, MEX. 0106260, PLD. 0071357, SPN. 0348633, SWD. 0328190, VZL. 0023686.
3,542,466.—DEVELOPMENT APPARATUS. NOV. 24, 1970. AUS. 0428620, BEL. 0725611, CAN. 0884213, FRA. 1598505, GRB. 1203167, ITL. 0870661, JAP. 0641479, SPN. 0361653, SWD. 0343694.
3,558,339.—METHOD OF AND APPARATUS FOR STIPPLING. JAN. 26, 1971. CAN. 0871649, GRB. 1266969.
3,574,301.—DEVELOPING APPARATUS. APR. 13, 1971. AUS. 0449350, BEL. 0748073, CAN. 0873249, FRA. 7011549 GRB. 1303493, ITL. 0899146, JAP. 0715126, STZ. 0518579, SWD. 0356379, USR. 0331581.
3,592,167.—APPARATUS FOR LOADING TONER ON A DEVELOPING BRUSH. JULY 13, 1971.
3,613,638.—MATERIALS FOR FIBROUS DEVELOPMENT. OCT. 19, 1971. CAN. 0910736.
3,632,370.—MULTIPLE BRUSH DEVELOPMENT. JAN. 4, 1972.
3,636,924.—FUR BRUSH DEVELOPING APPARATUS. JAN. 25, 1972. CAN. 0912811, GRB. 1340060, JAP. 0751882.
3,638,613.—TONER DEVELOPER SYSTEM. FEB. 1, 1972. AUS. 0445403, BEL. 0747124, CAN. 0889762, EGR. 0081783, FRA. 7007651, GRB. 1294603, ITL. 0898243, SPN. 0377302, STZ. 0520960, SWD. 0354363, TIW. 0006827.
3,687,106.—DONOR APPARATUS AND METHOD. AUG. 29, 1972. ARG. 0185079, BEL. 0753207, CAN. 0911706, FRA. 7027124, GRB. 1314862, ITL. 0900444, JAP. 0733285, MEX. 0117318, PNM. 0002237, VZL. 0027517.
3,692,402.—MATERIALS FOR FIBROUS DEVELOPMENT AND CLEANING MEMBER. SEPT. 19, 1972.
3,847,306.—DEVELOPING APPARATUS. NOV. 12, 1974. CAN. 0966998, GRB. 1353651.

Class 5C

3,648,657.—ELECTROSTATIC IMAGE DEVELOPMENT APPARATUS. MAR. 14, 1972.
3,805,739.—CONTROLLING MULTIPLE VOLTAGE LEVELS FOR ELECTROSTATIC PRINTING. APR. 23, 1974. CAN. 0972552, GRB. 1382710.
3,854,449.—DEVELOPMENT APPARATUS. DEC. 17, 1974. ARG. 0195893, BEL. 0797447, CAN. 0982886, FRA. 7243003, GRB. 1435761, ITL. 0987768, MEX. 0130638, SAF. 0733407, SPN. 0414805, STZ. 0551030, SWD. 7307101, VZL. 0032067.
3,967,892.—A DEVELOPMENT SYSTEM. JULY 6, 1976.
3,981,272.—MAG BRUSH HOUSING WITH DETACHABLE SUMP SECTION. BEL. 0835755. SEPT. 21, 1976.
3,998,537.—SPLIT DEVELOPER HOUSING WITH INTERLOCKED FLOW GATE & CATCH. DEC. 21, 1976. BEL. 0835370.
4,027,621.—DEVELOPING SYSTEM FOR ELECTROSTATIC REPRODUCTION MACHINES. JUNE 7, 1977.
4,039,102.—DEVELOPER DOOR WITH USE COUNTER ON DOOR. AUG. 2, 1977.
4,095,883.—MAGNETIC MIXING APPARATUS AND PROCESS. JUNE 20, 1978.
4,118,115.—ROLL DEVELOPER DRIVE. OCT. 3, 1978.
4,146,323.—AUGER FOR A DEVELOPMENT SYSTEM. MAR. 27, 1979.

Class 5C 1

3,176,652.—XEROGRAPHIC DEVELOPING APPARATUS. APR. 6, 1965. CAN. 0737851, GRB. 1018787, JAP. 0627140.
3,570,453.—DEVELOPMENT APPARATUS. MAR. 16, 1971. ARG. 0181813, AUS. 0429322, BEL. 0737102, CAN. 0885918, CZC. 0161861, EGR. 0081317, FRA. 6927184, GRB. 1256282, ITL. 0869726, JAP. 0716364, SPN. 0370289, STZ. 0496263, SWD. 0353165, TIW. 0005357, USR. 0380031.
3,572,288.—DEVELOPMENT APPARATUS. MAR. 23, 1971. CAN. 0885917.
3,572,289.—MAGNETIC BRUSH DEVELOPMENT APPARATUS. MAR. 3, 1971.
3,575,139.—ELECTROSTATIC MAGNETIC DEVELOPER UNIT GATING APPARATUS. APR. 20, 1971. CAN. 0930538.
3,583,364.—DEVELOPMENT APPARATUS. JUNE 8, 1971. BEL. 0738574, CAN. 0883725, FRA. 6930427, GRB. 1273187, ITL. 0871550, JAP. 0674394.
3,608,522.—XEROGRAPHIC DEVELOPMENT CONTROL APPARATUS. SEPT. 28, 1971. CAN. 0911704.
3,640,248.—ELECTROSTATIC MAGNETIC DEVELOPING APPARATUS—MULTIPLE MAGNETIC BRUSH UNIT. FEB. 8, 1972. ARG. 0184080, ATR. 0312419, AUS. 0437486, BEL. 0751486, BRA. 0088030, CAN. 0929337, CHL. 0026193, EGR. 0084331, FRA. 7020260, GRB. 1251477, ITL. 0893838, MEX. 0117951, NOR. 0133049, PNM. 0002537, SAF. 0703774, SPN. 0380378, STZ. 0509614, SWD. 0359664, TIW. 0007168, USR. 0419061, VZL. 0025834.
3,641,980.—DEVELOPMENT APPARATUS. FEB. 15, 1972. ARG. 0185081, AUS. 0445430, BEL. 0757698, CAN. 0913354, EGR. 0085713, FRA. 7038237, GRB. 1273456, ITL. 0909031, JAP. 0720627, MEX. 0118187, SPN. 0384576, STZ. 0516183, SWD. 0362510, TIW. 0006205.
3,665,891.—MAGNETIC BRUSH DEVELOPMENT APPARATUS. MAY 30, 1972. CAN. 0914904, GRB. 1347138, JAP. 783770.
3,683,406.—MAGNETIC INCREMENTAL CASCADE DEVELOPMENT SYSTEM. AUG. 8, 1972. CAN. 0945200, GRB. 1335995, JAP. 0752521.
3,690,912.—METHOD FOR MAGNETIC DEVELOPMENT OF LATENT ELECTROSTATIC IMAGE. SEPT. 12, 1972.
3,697,050.—CROSS MIXING BAFFLE. OCT. 10, 1972. CAN. 0951110.
3,709,713.—METHOD FOR MAGNETIC DEVELOPMENT. JAN. 9, 1973.
3,724,422.—MAGNETIC BRUSH DEVELOPING APPARATUS. APR. 3, 1973. ARG. 0190744, AUS. 0457858, BEL. 0776598, CAN. 0951111, EGR. 0097962, FRA. 7145341, GRB. 1373010, ITL. 0943877, MEX. 0124647, SPN. 0397854, SWD. 0365880, USR. 0459904.
3,788,275.—MAGNETIC SHIELDING APPARATUS. JAN. 29, 1974. BEL. 0801242, CAN. 0973703, GRB. 1438332, ITL. 0990692.
3,828,728.—XEROGRAPHIC DEVELOPMENT SYSTEM. AUG. 13, 1974. BEL. 0791193, CAN. 0980635, FRA. 7240058, GRB. 1413337, ITL. 0970350, SWD. 7214311.
3,866,564.—MAGNETIC BRUSH DEVELOPING APPARATUS FOR COPIERS. FEB. 18, 1975.
3,872,830.—MAGNETIC BRUSH DEVELOPING APPARATUS. MAR. 25, 1975.
3,880,517.—REPRODUCTION MACHINE DEVELOPER APPARATUS. APR. 29, 1975.
3,880,518.—FLOATING DEVELOPER PLATEN FOR REPRODUCTION APPARATUS. APR. 29, 1975.
3,887,367.—METHOD FOR TEMPERATURE STABLIZING PHOTORECEPTORS. JUNE 3, 1975.
3,893,815.—MAGNETIC BRUSH SUPPORT MEMBER. JULY 8, 1975.
3,906,121.—ELECTROSTATIC DEVELOPMENT METHOD USING MAGNETIC BUSH CONFIGURATION TRANSPORT. SEPT. 16, 1975. CAN. 0970631, GRB. 1381049.
3,906,898.—MAGNETIC BRUSH DEVELOPING APPARATUS. SEPT. 23, 1975.

3,911,864.—TONER PRELOADED MAGNETIC BRUSH DEVELOPMENT SYSTEM. OCT. 14, 1975. BEL. 0809859, STZ. 0568594.
3,915,121.—DEVELOPMENT APPARATUS. OCT. 28, 1975.
3,920,329.—BACKGROUND REMOVAL APPARATUS. NOV. 18, 1975.
3,921,577.—MAGNETIC DEVELOPMENT UNIT. NOV. 25, 1975.
3,926,516.—DEVELOPMENT APPARATUS FOR AN ELECTROSTATOGRAPHIC PRINTING MACHINE. DEC. 16, 1975.
3,927,640.—DEVELOPER SHUT-OFF APPARATUS. DEC. 23, 1975.
3,934,549.—TRANSFER APPARATUS. JAN. 27, 1976.
3,945,342.—MAGNETIC BRUSH SUPPORT MEMBER. MAR. 23, 1976.
3,948,217.—MAGNETIC BRUSH DEVELOPMENT SYSTEM WITH FLOATING DEVELOPMENT ROLLS. APR. 6, 1976. BEL. 0835370.
3,949,704.—MAGNETIC BRUSH DEVELOPING APPARATUS. APR. 13, 1976.
3,950,089.—COATED ROLL FOR MAGNETIC BRUSH DEVELOPMENT & CLEANING SYSTEMS. APR. 13, 1976.
3,953,121.—ARTICULATED DEVELOPMENT APPARATUS. APR. 27, 1976. IRN. 0013434.
3,962,003.—METHOD OF FORMING MAGNETIC BRUSH SUPPORT MEMBER. JUNE 8, 1976.
3,968,773. JULY 13, 1976.
3,982,498.—DEVELOPMENT APPARATUS. SEPT. 28, 1976. FRA. 7436713.
3,991,713.—DEVELOPMENT APPARATUS FOR AN ELECTROSTATOGRAPHIC PRINTING MACHINE. NOV. 16, 1976.
3,996,892.—SPATIALLY PROGRAMMABLE ELECTRODE TYPE ROLL FOR ELECTROSTATOGRAPHIC PROCESSORS AND THE LIKE. DEC. 14, 1976.
4,033,293.—A DEVELOPING DEVICE OF AN ELECTROPHOTOGRAPHIC COPYING MACHINE. JULY 5, 1977.
4,033,294.—DEVELOPER MIXING AND TRANSPORTING AUGER FOR MAGNETIC BRUSH DEVELOPING APPARATUS. JULY 5, 1977.
4,034,709.—AN IMPROVED DEVELOPER ROLL. JULY 12, 1977.
4,044,719.—DEVELOPING APPARATUS IN ELECTROCOPYING MACHINES. AUG. 30, 1977.
4,050,413.—MAGNETIC BRUSH CROSSMIXING SYSTEM. SEPT. 27, 1977.
4,057,666.—MAGNETIC BRUSH DEVELOPER ROLL FOR ELECTROSTATIC REPRODUCTION MACHINES. NOV. 8, 1977.
4,077,358.—DEACTIVATING DEVICE FOR A MAGNETIC BRUSH DEVELOPER USED IN A MULTICOLOR ELECTROPHOTOGRAPHIC. MAR. 7, 1978.
4,078,520.—VIBRATING SCREEN FILTER FOR TONER DENSITY MEASURING APPARATUS. MAR. 14, 1978.
4,084,542.—POSITIONING APPARATUS FOR MAGNETIC BRUSH DEVELOPING DEVICE. APR. 18, 1978.
4,086,006.—PURGING SYSTEM FOR A DEVELOPMENT APPARATUS. APR. 25, 1978.
4,096,826.—MAGNETIC BRUSH DEVELOPMENT SYSTEM FOR FLEXIBLE PHOTORECEPTORS. JUNE 27, 1978.
4,098,228.—HIGH SPEED MAGNETIC BRUSH DEVELOPMENT SYSTEM. JULY 4, 1978.
4,116,555.—BACKGROUND REMOVAL APPARATUS. SEPT. 26, 1978.
4,117,803.—DEVELOPER FLOW REGULATOR FOR A MAGNETIC BRUSH DEVELOPING DEVICE. OCT. 3, 1978.
4,118,115.—ROLL DEVELOPER DRIVE. OCT. 3, 1978.
4,127,327.—APPARATUSES INCORPORATING A COMPOSITE SUPPORT MEMBER. NOV. 28, 1978.
4,131,357.—SEQUENTIALLY ACTIVATED DEVELOPMENT SYSTEM FOR AN ELECTROPHOTOGRAPHIC PRINTER. DEC. 26, 1978.
4,155,329.—MAGNETIC BRUSH DEVELOPING DEVICE. MAY 22, 1979.
4,275,956.—DEVELOPING APPARATUS. JUNE 30, 1981.

Class 5C 1A

3,584,601.—MAGNETIC BRUSH BELT DEVELOPMENT. JUNE 15, 1971. CAN. 0884799, GRB. 1238277.
3,592,166.—APPARATUS FOR DEVELOPING ELECTROSTATIC IMAGES. JULY 13, 1971. CAN. 0887598, GRB. 1275822, JAP. 1162298.
3,638,614.—ELECTROSTATIC LATENT IMAGE DEVELOPMENT APPARATUS. FEB. 1, 1972. CAN. 0929338, GRB. 1304236, JAP. 0808219.
3,741,790.—METHOD FOR MAGNETICALLY DEVELOPING ELECTROSTATIC IMAGES. JUNE 26, 1973.
3,823,688.—MAGNETIC BRUSH ASSEMBLY. JULY 16, 1974. BEL. 0794507, CAN. 0989607, FRA. 7302247, GRB. 1394502, SWD. 7301014.
3,965,862.—XEROGRAPHIC DEVELOPMENT SYSTEM. JUNE 29, 1976.
4,239,017.—DEVELOPMENT SYSTEM. DEC. 16, 1980.
4,240,740.—DEVELOPMENT SYSTEM. DEC. 23, 1980.
4,267,797.—DEVELOPMENT SYSTEM. MAY 19, 1981.
4,273,069.—DEVELOPMENT SYSTEM. JUNE 16, 1981.

Class 5C 1B

3,532,071.—DEVELOPMENT APPARATUS. OCT. 6, 1970. CAN. 0883763, GRB. 1227549, JAP. 0650630.
3,552,355.—DEVELOPMENT APPARATUS. JAN. 5, 1971. ARG. 0175330, ATR. 0300575, AUS. 0441519, BEL. 0730371, CAN. 0914005, CZC. 0161850, DNK. 0129880, EGR. 0077412, EIR. 0032786, FRA. 6909741, GRB. 1263566, GRK. 0039919, IND. 0120212, ISR. 0031757, ITL. 0860255, LXB. 0058295, MEX. 0111374, NOR. 0128037, NZL. 0155695, PAK. 0120989, PLD. 0017651, PLP. 0006606, PNM. 0001723, PTG. 0051392, RHD. 1156947, SAF. 0691728, SPN. 0365439, STZ. 0499140, SWD. 0341530, TIW. 0006602, UAR. 0009242, USR. 0383338, VTM. 0001829, VZL. 0023745.
3,645,770.—METHOD FOR DEVELOPING XEROGRAPHIC IMAGES. FEB. 29, 1972.
3,893,414.—METHOD AND APP FOR VARYING DEVELOPER BANDWIDTH. JULY 8, 1975.
3,908,596.—SEGMENTED GATE DEVELOPER FLOW CONTROLLER. SEPT. 30, 1975.
3,930,466.—SEGMENTED GATE DEVELOPER FLOW CONTROLLER. JAN. 6, 1976.
3,990,393.—APPARATUS FOR DEPOSITING MAGNETIC MATERIAL ON AN IMAGE BEARING MEMBER. NOV. 9, 1976.
3,998,184.—A DEVELOPMENT APPARATUS. DEC. 21, 1976.
4,025,179.—PASSIVE CROSS MIXING SYSTEM. MAY 24, 1977.
4,246,867.—XEROGRAPHIC DEVELOPING SYSTEM ROLLS HAVING MAGNETS OF DIFFERENT WIDTHS. JAN. 27, 1981. CAN. 1048259, FRA. 7414644, GER. 2420085, GRB. 1471444.

Class 5C 2

3,508,823.—DUPLICATING APPARATUS. APR. 28, 1970.
3,836,244.—COLOR XEROGRAPHY. SEPT. 17, 1974.
3,941,280.—APPARATUS FOR CONTROLLING DEVELOPER EFFICIENCY. MAR. 2, 1976.
3,965,862.—XEROGRAPHIC DEVELOPMENT SYSTEM. JUNE 29, 1976.
4,053,218.—DEVELOPMENT SYSTEM. OCT. 11, 1977.
4,082,061.—MULTI-COLOR DEVELOPMENT SYSTEM. APR. 4, 1978.
4,087,168.—CHARGING SYSTEM FOR ELECTROSTATIC REPRODUCTION MACHINE. MAY 2, 1978.
4,131,357.—SEQUENTIALLY ACTIVATED DEVELOPMENT SYSTEM FOR AN ELECTROPHOTOGRAPHIC PRINTER. DEC. 26, 1978.

Class 5C 3

3,906,897.—DEVELOPMENT APPARATUS. SEPT. 23, 1975. ARG. 0195893, BEL. 0797447, CAN. 0982886, FRA. 7243003, GRB. 1435761, ITL. 0987768, MEX. 0130638, SAF. 0733407, SPN. 0414905, STZ. 0551030, SWD. 7307101, VZL. 0032067.
3,940,272.—METHOD OF DEVELOPING AN ELECTROSTATIC LATENT IMAGE. FEB. 24, 1976. ARG. 0195893, BEL. 0797447, CAN. 0982886, FRA. 7243003, GRB. 1435761, ITL. 0987768, MEX. 0130638, SAF. 0733407, SPN. 0414905, STZ. 0551030, SWD. 7307101, VZL. 0032067.
4,102,305.—DEVELOPMENT SYSTEM WITH ELECTRICAL FIELD GENERATING MEANS. JULY 25, 1978.
4,150,173.—PROCESS OF PREPARING TRANSPARENT COLORED MAGNETIC MATERIALS. MAY 17, 1979.
4,199,614.—TRANSPARENT COLORED MAGNETIC MATERIALS AND ELECTROSTATOGRAPHIC PROCESS. APR. 22, 1980.
4,273,069.—DEVELOPMENT SYSTEM. JUNE 16, 1981.

Class 5D

3,768,904.—PRINTING APPARATUS INCLUDING REGISTRATION CONTROL. OCT. 30, 1973.
3,793,985.—IMAGING SYSTEM. FEB. 26, 1974.
3,924,944.—SPLIT DEVELOPER HOUSING. DEC. 9, 1975.

4,015,561.—ANTI-GRAVITATIONAL CASCADE DEVELOPMENT FOR ELECTROSTATIC PROCESSOR. APR. 5, 1977.
4,095,883.—MAGNETIC MIXING APPARATUS AND PROCESS. JUNE 20, 1978.

Class 5D 1

3,219,014.—MECHANICAL SHIELD TO PROTECT MAGNETIC CORE IN XEROGRAPHIC DEVELOPING APPARATUS. NOV. 23, 1965. CAN. 0757573, FRA. 1393298, GER. 1497076, GRB. 1034099, ITL. 0710188, JAP. 0477812.
3,685,488.—XEROGRAPHIC DEVELOPMENT. AUG. 22, 1972.
3,884,571.—LEAKAGE DEVELOPER RECIRCULATION. MAY 20, 1975. HOL. 3884571.
3,999,512.—ELECTROSTATIC DEVELOPMENT SYSTEM WITH PASSIVE STORAGE CAPACITY. DEC. 28, 1976. BEL. 0823656.
4,033,293.—A DEVELOPING DEVICE OF AN ELECTROPHOTOGRAPHIC COPYING MACHINE. JULY 5, 1977.

Class 5D 1A

3,190,264.—XEROGRAPHIC DEVELOPING APPARATUS. JUNE 22, 1965. CAN. 0733036.
3,303,817.—XEROGRAPHIC DEVELOPING APPARATUS. FEB. 14, 1967.
3,472,657.—XEROGRAPHIC DEVELOPMENT METHOD AND APPARATUS. OCT. 14, 1969. AUS. 0418178, BEL. 0680374, CAN. 0813843, FRA. 1477370, GRB. 1141167, ITL. 0766858, JAP. 0537665, MEX. 0091119, SWD. 0330833.
3,593,838.—CONVEYOR BELT. JULY 20, 1971. CAN. 0883720.
3,635,553.—CASCADE DEVELOPING APPARATUS UTILIZING A ROTARY WHEEL WITH SCOOPS. JAN. 18, 1972.
3,649,262.—SIMULTANEOUS DEVELOPMENT-CLEANING OF SAME AREA OF AN ELECTROSTATOGRAPHIC IMAGE SUPPORT SURFACE. MAR. 14, 1972. AUS. 0445365, BEL. 0743661, CAN. 0916232, FRA. 6944511, GRB. 1296997, ITL. 0882670, USR. 0358873.
3,662,711.—DEVELOPMENT APPARATUS. MAY 16, 1972. CAN. 0945757, GRB. 1345253.
3,663,291.—CASCADE DEVELOPMENT. MAY 16, 1972.
3,678,896.—CONVEYOR SYSTEM. JULY 25, 1972. CAN. 0952465, GRB. 1325831.

Class 5D 1B

3,435,803.—LIFTING APPARATUS. APR. 1, 1969. CAN. 0937394, FRA. 1511169, GER. 1456806, GRB. 1165378, ITL. 0788954, JAP. 0542586, MEX. 0095039.
3,448,724.—DEVELOPING APPARATUS. JUNE 10, 1969. ARG. 0174576, AUS. 0430081, BEL. 0726573, CAN. 0884214, CZC. 0157054, EGR. 0077413, FRA. 1598024, GRB. 1258781, ITL. 0854008, JAP. 0665972, MEX. 0107603, PNM. 0001429, RMN. 0054735, SAF. 0069179, SPN. 0362358, STZ. 0486057, SWD. 0338507, USR. 0410595, VZL. 0023716.
3,472,657.—XEROGRAPHIC DEVELOPMENT METHOD AND APPARATUS. OCT. 14, 1969. AUS. 0418178, BEL. 0680374, CAN. 0813843, FRA. 1477370, GRB. 1141167, ITL. 0766858, JAP. 0537665, MEX. 0091119, SWD. 0330833.
3,606,533.—XEROGRAPHIC DEVELOPMENT. SEPT. 20, 1971.
3,661,118.—ELECTROSTATIC DEVELOPMENT. MAY 9, 1972. CAN. 0951107, GRB. 1359234.
3,695,224.—CASCADE DEVELOPMENT. OCT. 3, 1972.
3,835,811.—DEVELOPMENT APPARATUS FOR ELECTROPHOTOGRAPHIC PRINTING MACHINE. SEPT. 17, 1974.
3,888,578.—DEVELOPMENT APPARATUS FOR ELECTROPHOTOGRAPHIC PRINTING MACHINE. JUNE 10, 1975.
3,900,255.—PADDLE-WHEEL DEVELOPMENT SYSTEM. AUG. 19, 1975.

Class 5D 1C

3,287,150.—CASCADE DEVELOPMENT PROCESS W/ TWO-COMPONENT DEVELOPER. NOV. 22, 1966.
3,415,224.—MAGNETIC CASCADE DEV APPARATUS. DEC. 10, 1968. AUS. 0423497, BEL. 0725943, CAN. 0852660, COR. 000948A, EGR. 0074432, FRA. 1603904, GRB. 1217281, ITL. 0849521, LXB. 0057873, MRC. 0014726, PTG. 0051108, SAF. 0688440, SPN. 0361840, STZ. 0493872, SWD. 0345753, SYA. 0002440, ZMB. 0166972.
3,667,427.—CASCADE APPARATUS. JUNE 6, 1972. CAN. 0951112, GRB. 1377152.
3,678,897.—DEVELOPER MIXING APPARATUS. JULY 25, 1972. BEL. 0778426, CAN. 0951113, FRA. 7203212, GRB. 1377151, ITL. 0946909.
3,741,372.—CONVEYOR FOR DEVELOPER APPARATUS. JUNE 26, 1973.

Class 5D 1D

3,550,555.—XEROGRAPHIC DEVELOPER SEPARATION. DEC. 29, 1970. CAN. 0855652, GRB. 1238032.

Class 5D 2

3,375,807.—XEROGRAPHIC DEVELOPER. APR. 2, 1968. CAN. 0819049, MEX. 0092092, VZL. 0024448.
3,542,579.—ELECTROSTATIC IMAGE DEVELOPMENT. NOV. 24, 1970.
3,973,517.—DEVELOPMENT DEVICE AND METHOD. AUG. 10, 1976.

Class 5D 3

3,336,905.—XEROGRAPHIC DEVELOPER APPARATUS. AUG. 22, 1967. CAN. 0793223, GRB. 1123059, JAP. 0508405.
3,428,025.—XEROGRAPHIC DEVELOPMENT APPARATUS-POWDER CLOUD BY CHARGE BREAKDOWN. DEC. 18, 1969.
3,638,610.—DEVELOPMENT APPARATUS. FEB. 1, 1972. CAN. 0916432, FRA. 7041622.
3,638,611.—ELECTRODED DEVELOPMENT DEVICE. FEB. 1, 1972. ARG. 0184658, ATR. 0308537, AUS. 0446323, BEL. 0752936, CAN. 0913893, CHL. 0025914, DNK. 0129305, EGR. 0084129, FRA. 7024067, GRB. 1258738, GUA. 0002615, IND. 0127311, ITL. 0900196, JAP. 0719143, MEX. 0115403, NOR. 0130134, NZL. 0160644, PLD. 0081287, PLP. 0006288, PNM. 0002266, PTG. 0054072, SAF. 0704532, SPN. 0381383, STZ. 0520961, SWD. 0359386, TIW. 0005923, USR. 0414818.
3,682,132.—AUTOMATIC DEVELOPER CONTROLLER. AUG. 8, 1972.

Class 5D 4

3,347,691.—XEROGRAPHIC DEVELOPMENT. OCT. 17, 1967. ARG. 0168482, CAN. 0827608, FRA. 1497061, GRB. 1166464, ITL. 0788454, JAP. 0589492, MEX. 0093822, VZL. 0032595.
3,412,710.—CLEAN UP ELECTRODE. NOV. 26, 1968. BEL. 0704923, CAN. 0867283, FRA. 1540699, GRB. 1196637, ITL. 0814605, JAP. 0585018.
3,620,191.—BIASED INPUT CHUTE. NOV. 16, 1971. ARG. 0199342, ATR. 0324837, AUS. 0446250, BEL. 0752943, CAN. 0918411, CHL. 0025871, DNK. 0128800, EGR. 0083704, FRA. 7024665, GRB. 1310444, GUA. 0002727, IND. 0127313, ITL. 0900192, JAP. 0731612, MEX. 0114979, NOR. 0132115, NZL. 0160647, PLP. 0008638, PNM. 0002269, PTG. 0054075, SAF. 70/4534, SPN. 0381382, STZ. 0528761, SWD. 0359387, TIW. 0007164, USR. 0358874.
3,669,072.—DEVELOPER APPARATUS. JUNE 13, 1972. CAN. 0930539, GRB. 1343141.
3,682,538.—XEROGRAPHIC PICK-OFF PLATE. AUG. 8, 1972. ARG. 0186267, BEL. 0764562, CAN. 0935635, FRA. 7110750, GRB. 1349272, ITL. 0922348, MEX. 0119677, USR. 0426387.
3,682,677.—BACKGROUND REMOVAL. AUG. 8, 1972.
3,795,222.—DEVELOPMENT ELECTRODE SYSTEM. MAR. 5, 1974.
3,807,997.—PLURAL ELECTRODE DEVELOPMENT METHODS FOR LATENT ELECTROSTATIC IMAGES. APR. 30, 1974. CAN. 0979299, GRB. 1381910.
3,808,026.—LIQUID DEVELOPMENT OF ELECTROSTATIC LATENT IMAGE. APR. 30, 1974.
3,834,930.—METHOD OF DEVELOPING ELECTROSTATOGRAPHIC IMAGE. SEPT. 10, 1974.
3,907,695.—LIQUID DEVELOPER. SEPT. 23, 1975.
4,197,211.—LIQUID ELECTROPHOTOGRAPHIC DEVELOPERS. APR. 8, 1980.

Class 5D 5

3,223,548.—XEROGRAPHIC DEVELOPING MACHINE AND METHOD. DEC. 14, 1965.
3,316,878.—CASCADE DEVELOPING APPARATUS. MAY 2, 1967.

Class 5E

3,357,399.—COMBINED FLUIDIZED BED AND INVERTED CASCADE DEVELOPMENT APPARATUS. DEC. 12, 1967. ARG. 0171121, CAN. 0821473, CHL. 0022944, MEX. 0096075, PRU. 0009332, URO. 0008548, VZL. 0021060.
3,677,633.—PORTABLE DOCUMENT ABSTRACTOR. JULY 18, 1972.
3,738,832.—COLOR ELECTROPHOTOGRAPHIC PROCESS EMPLOYING LIQUID DEVELOPER CONTAINING GELATINAIN. JUNE 12, 1973.
3,748,126.—MULTIPLE COPY SELECTIVE RE-WETTING PRINTING. JULY 24, 1973.
3,748,127.—TREATMENT OF REUSABLE PHOTOCONDUCTIVE SURFACES WITH LEWIS ACIDS OR BASES. JULY 24, 1973.
3,776,631.—LIQUID DEVELOPER CLEANING SYSTEM. DEC. 4, 1973.
3,865,611.—METHOD FOR ELECTROSTATIC IMAGE DEVELOPMENT EMPLOYING TONER AND CARRIER SUPPORTED BY CONDUCTIVE. FEB. 11, 1975.
3,893,854.—PHOTOGRAPHIC ARTICLES WITH GAPS FOR PROCESSING FLUIDS. JULY 8, 1975.
3,918,809.—APPARATUS FOR CLEANING A SURFACE SUPPORT. NOV. 11, 1975, GRB. 1438660.
3,927,934.—ELECTROSTATOGRAPHIC REPRODUCTION MACHINES. DEC. 23, 1975.
3,940,282.—BLADE CLEANING OF SURFACE WITH REVERSE MOVEMENT. FEB. 24, 1976.
3,951,653.—METHOD OF PREVENTING TONER BUILD-UP ON ELECTRODES DURING LIQUID DEVELOPMENT. APR. 20, 1976.
3,973,699.—LIQUID DISPENSING APPARATUS UTILIZING DOUBLE ACTING PISTON. AUG. 10, 1976, GRB. 1455885.
3,974,554.—QUANDRANGULAR TRIHETICORD GRAVURE ROLL. AUG. 17, 1976, BEL. 0841855.
3,978,817.—PATTERNED GRAVURE & DOCTORING MEANS THEREFOR. SEPT. 7, 1976. BEL. 0841855.
3,980,404.—XEROGRAPHIC APPARATUS HAVING IMPROVED FLUID DISPENSING MEMBER. SEPT. 14, 1976.
4,017,174.—DEVELOPER ASSEMBLY SUPPORT. APR. 12, 1977.
4,020,788.—DOCTORING MEANS. MAY 3, 1977.
4,023,900.—VARIABLE SPEED LIQUID DEVELOPMENT ELECTROSTATOGRAPHIC APPARATUS. MAY 17, 1977.
4,024,834.—TEMPERATURE COMPENSATED DOCTOR BLADE. MAY 24, 1977. GRB. 1430518.
4,037,952.—METHOD OF PREVENTING TONER BUILD-UP ON ELECTRODES DURING LIQUID DEVELOPMENT. JULY 26, 1977.
4,068,938.—ELECTROSTATIC COLOR PRINTING USING DISCRETE POTENTIALS. JAN. 17, 1978. GRB. 1442234.
4,126,711.—CHARGE PATTERN DEVELOPMENT METHOD & APPARATUS. NOV. 21, 1978. GRB. 1484712.
4,161,360.—LIQUID DEVELOPMENT APPARATUS. JULY 17, 1979.
4,210,080.—IMAGING METHOD AND APPARATUS. JULY 1, 1980.

Class 5E 2

3,730,708.—ELECTROPHOTOGRAPHIC MULTI-COLOR PROCESS EMPLOYING LIQUID DEVELOPER. MAY 1, 1973.
3,776,723.—LIQUID TRANSFER ELECTROPHOTOGRAPHIC DEVELOPMENT PROCESS. DEC. 4, 1973.
3,862,618.—LIQUID DEVELOPING APPARATUS DEVELOPING AN ELECTROSTATIC IMAGE. JAN. 28, 1975.
3,960,444.—ELECTROPHOTOGRAPHIC PRINTING MACHINE. JUNE 1, 1976.
4,007,401.—ELECTROPHOTOGRAPHIC PRINTING METHOD. FEB. 8, 1977.

Class 5E 4

3,251,688.—LIQUID TRANSFER DEVELOPMENT. MAY 17, 1966. CAN. 0765523, FRA. 1362253, GRB. 1032013.
3,270,637.—ELECTROVISCOUS RECORDING. SEPT. 6, 1966. AUS. 0403009, CAN. 0740112, FRA. 1414126, GER. 1497109, GRB. 1086197, HOL. 0141644, ITL. 0738077, JAP. 0508403, NOR. 0127882, STZ. 0472710, SWD. 0331032.
3,281,241.—METHOD OF FORMING A VISUAL RECORD OF A LATENT IMAGE RECEIVING WEB. OCT. 25, 1966. AUS. 0275028, CAN. 0766420, FRA. 1362254, GER. 1303008, GRB. 1035236, ITL. 0699412, JAP. 0470426.
3,284,224.—CONTROLLED XEROGRAPHIC DEVELOPMENT. NOV. 8, 1966. CAN. 0751349, GRB. 1038801, JAP. 0640353.

3,334,613.—XEROGRAPHIC DEVELOPMENT APPARATUS. AUG. 8, 1967. CAN. 0787870, GRB. 1125628, JAP. 0546654.
3,369,918.—DEV OF LATENT ELECTROSTATIC IMGS W/ CREATED WAVES OF LIQUID DEVELOPER. FEB. 20, 1968.
3,576,623.—DEVELOPMENT SYSTEM EMPLOYINO A CORONODE IMMERSED IN A LIQUID DEVELOPER. APR. 27, 1971. AUS. 0434437, CAN. 0872191, GER. 1908292, GRB. 1259880, JAP. 0675662.
3,577,259.—LIQUID DEVELOPMENT OF ELECTROSTATIC LATENT IMAGES UTILIZING A TONER-FREE ZONE. MAY 4, 1971.
3,592,678.—LIQUID DONOR DEVELOPMENT WITH ELECTROPHORETIC CLEANING. JULY 13, 1971.
3,620,800.—CLEANING LIQUID DEVELOPED ELECTROSTATIC IMAGES BY CONTACT WITH VAPORIZED CLEANING FLUID. NOV. 16, 1971. CAN. 0933997.
3,627,410.—REPRODUCTION APPARATUS WITH LIQUID. DEC. 14, 1971. CAN. 0886508.
3,627,557.—LIQUID DVLPMNT BY REDUCING VISCOSITY OF DVLPR ON ROLLER APPLICATION PRIOR TO DEVELOPMENT. DEC. 14, 1971.
3,628,981.—LIQUID TONER DEVELOPMENT. DEC. 21, 1971. ARG. 0181932, MEX. 0116451.
3,642,471.—LIQUID DEVELOPING PROCESS IN AN ELECTROSTATOGRAPHIC IMAGING SYSTEM. FEB. 15, 1972.
3,642,515.—LIQUID DEVELOPMENT UTILIZING A CURVILINEAR DEVELOPMENT ELECTRODE. FEB. 15, 1972.
3,652,319.—CYCLIC IMAGING SYSTEM. MAR. 28, 1972. AUS. 0441527, BEL. 0761029, CAN. 0944010, FRA. 7047634, GRB. 1336739, ITL. 0913957, JAP. 0771819, SWD. 0363175.
3,656,948.—SELECTED REMOVAL OF LIQUID DVLPR IN CYCLICAL ELECTROPHOTOGRAPHIC PROCESS. APR. 18, 1972. CAN. 0906335, GRB. 1335054, JAP. 0760503.
3,671,290.—IMAGING SYSTEM. JUNE 20, 1972.
3,672,884.—ELECTROSTATIC PRINTING. JUNE 27, 1972.
3,692,520.—DVLPNG ELCTRSTIC IMGS EMPLYNG FATTY ACD ESTRS INHBT DVLPR BUILD-UP. SEPT. 19, 1972. CAN. 0940361, GRB. 1332674.
3,784,397.—IMAGING SYSTEM. JAN. 8, 1974.
3,800,744.—ELECTROSTATIC LATENT IMAGE DEVELOPING APPARATUS. APR. 2, 1974.
3,804,510.—IMAGING DEVELOPING SYSTEM. APR. 16, 1974.
3,808,025.—LIQUID DEVELOPING METHOD FOR ELECTROPHOTOGRAPHY. APR. 30, 1974.
3,816,114.—ELECTRO-PHOTOGRAPHIC METHOD. JUNE 11, 1974.
3,817,212.—ELECTROSTATOGRAPHIC LIQUID DEVELOPMENT APPARATUS. JUNE 18, 1974.
3,832,975.—ELECTROPHOTOGRAPHIC APPARATUS. SEPT. 3, 1974.
3,836,384.—IMAGING SYSTEMS. SEPT. 17, 1974.
3,841,893.—CHARGE CONTROL AGENTS FOR LIQUID DEVELOPERS. OCT. 15, 1974.
3,849,171.—METHOD FOR CLEANING BACKGROUND AREAS FROM DEVELOPED RECORDING SURFACES. NOV. 19, 1974. CAN. 0941882.
3,862,619.—ELECTRO-PHOTOGRAPHIC APPARATUS. JAN. 28, 1975.
3,864,125.—ELECTROPHOTOGRAPHIC METHOD OF MAKING AN IMAGING MASTER. FEB. 4, 1975.
3,870,514.—LIQUID DEVELOPMENT FOR THE ELECTRONIC PHOTOGRAPHY. MAR. 11, 1975.
3,877,934.—INDUCTION IMAGING WITH IN-PLACE DEVELOPMENT. APR. 15, 1975.
3,890,040.—INDUCTION IMAGING APPARATUS. JUNE 17, 1975.
3,913,524.—LIQUID DEVELOPING APPARATUS FOR ELECTROPHOTOGRAPHY. OCT. 21, 1975.
3,926,825.—LIQUID DEVELOPER COMPOSITION AND PROCESS FOR PREPARING SAME. DEC. 16, 1975.
3,931,792.—ABRASIVE LIQUID DEVELOPING APPARATUS. JAN. 13, 1976.
3,942,474.—DEVELOPING SYSTEMS. MAR. 9, 1976. ARG. 0181931, ATR. 0311971, AUS. 0457519, BEL. 0752802, CAN. 0904108, CHL. 0026275, EGR. 0084325, FRA. 7024068, GRB. 1320509, ITL. 0894828, JAP. 0815361, MEX. 0116454, SAF. 0704474, SPN. 0381297, STZ. 0513437, SWD. 0357269, TIW. 0006614, 0033335.
3,943,268.—LIQUID DEVELOPER PROCESS AND APP FOR ELECTROSTATOGRAPHY. MAR. 9, 1976. CAN. 0904683.
3,965,861.—SEPARATED ROLLER LIQUID DEVELOPMENT. JUNE 29, 1976.
3,968,044.—MILLED LIQUID DEVELOPER. JULY 6, 1976.

3,970,043.—ELECTROPHOTOGRAPHIC DEVICE FOR LIQUID DEVELOPMENT. AUG. 20, 1976.
3,971,659.—COLOR ELECTROPHOTOGRAPHIC PROCESS USING PHOTO CONDUCTIVE PARTICLES IN LIQUID DEVELOPER. JULY 27, 1976.
3,972,305.—IMAGING SYSTEM. AUG. 3, 1976. CAN. 0904683.
3,976,808.—IMAGING SYSTEMS. AUG. 24, 1976.
3,986,968.—MILLED AND POLAR SOLVENT EXTRACTED LIQUID DEVELOPER. OCT. 19, 1976.
4,183,818.—COLOR ELECTROPHOTOGRAPHIC LIQUID DEVELOPER OF COLORED PARTICLES AND ZINC OXIDE. JAN. 15, 1980.

Class 5E 5

3,372,027.—XEROGRAPHIC LIQUID DEVELOPMENT. MAR. 5, 1968. CAN. 0800963, GRB. 1091169, ITL. 0760712, JAP. 0571175.
3,652,319.—CYCLIC IMAGING SYSTEM. MAR. 28, 1972. AUS. 0441527, BEL. 0761029, CAN. 0944010, FRA. 7047634, GRB. 1336739, ITL. 0913957, JAP. 0771819, SWD. 0363175.
3,667,428.—DEVELOPING SYSTEMS. JUNE 6, 1972. ARG. 0195534, ATR. 0312420; AUS. 0456202, BEL. 0752805, CAN. 0904107, CHL. 0026274, CZC. 0164275, DNK. 0126528, EGR. 0083514, FRA. 7024066, GRB. 1320232, ITL. 0894827, JAP. 0745765, MEX. 0114978, PNM. 0002541, SAF. 0704475, SPN. 0194607, STZ. 0543753, SWD. 0366126, TIW. 0006616, USR. 0420196.
3,676,215.—IMAGING SYSTEM. JULY 11, 1972. ARG. 0182525, AUS. 0430692, BEL. 0732139, CAN. 0900770, FRA. 6913232, GRB. 1272306, ITL. 0857440, JAP. 0698292, MEX. 0109289, PNM. 0001433, SPN. 0386902, SWD. 0352117, USR. 0309549.
3,692,520.—DVLPNG ELCTRSTIC IMGS EMPLYNG FATTY ACD ESTRS INHBT DVLPR BUILD-UP. SEPT. 19, 1972. CAN. 0940361, GRB. 1332674.
3,712,728.—REVERSAL DEVELOPMENT. JAN. 23, 1973. BEL. 0777718, CAN. 0949826, FRA. 7201004, GRB. 1374831, ITL. 0946351.
3,729,419.—LIQUID DEVELOPER. APR. 24, 1973.
3,772,012.—REVERSAL DEVELOPMENT USING POLAR LIQUID DEVELOPERS. NOV. 13, 1973. BEL. 0777718, CAN. 0949826, FRA. 7201004, GRB. 1374831, ITL. 0946351.
3,776,723.—LIQUID TRANSFER ELECTROPHOTOGRAPHIC DEVELOPMENT PROCESS. DEC. 4, 1973.
3,795,530.—ELECTROSTATIC LATENT IMAGE DEVELOPMENT. MAR. 5, 1974.
3,806,354.—METHOD OF DEVELOPING ELECTROSTATIC LATENT IMAGES. APR. 23, 1974.
3,817,748.—CONTRAST CONTROL IN ELECTROSTATIC COPYING UTILIZING LIQUID DEVELOPMENT. JUNE 18, 1974. GRB. 1406794.
3,834,930.—METHOD OF DEVELOPING ELECTROSTATOGRAPHIC IMAGE. SEPT. 10, 1974.
3,856,519.—TRANSFER OF TONER USING A VOLATILE INSULATING LIQUID. DEC. 24, 1974.
3,900,405.—CASSETTE OPENING MECHANISM. AUG. 19, 1975. CAN. 0926460, GRB. 1362697.
3,907,694.—NON-VOLATILE CONDUCTIVE INKS. SEPT. 23, 1975.
3,907,695.—LIQUID DEVELOPER. SEPT. 23, 1975.
3,918,400.—BLADE MOUNTING ASSEMBLIES. NOV. 11, 1975. BEL. 0816534, FRA. 7421752, GRB. 1419417.
3,918,807.—CLEANING BLADE FOR PHOTOCOPIER. NOV. 11, 1975.
3,942,349.—CROWN DIE FOR THREAD ROLLING OF APPLICATOR ROLLS. MAR. 9, 1976.
3,942,474.—DEVELOPING SYSTEMS. MAR. 9, 1976. ARG. 0181931, ATR. 0311971, AUS. 0457519, BEL. 0752802, CAN. 0904108, CHL. 0026275, EGR. 0084325, FRA. 7024068, GRB. 1320509, ITL. 0894828, JAP. 0815361, MEX. 0116454, SAF. 0704474, SPN. 0381297, STZ. 0513437, SWD. 0357269, TIW. 0006614, VZL. 0033335.
3,954,640.—ELECTROSTATIC PRINTING INKS. MAY 4, 1976. BEL. 0816553, GRB. 1452556.
3,978,817.—PATTERNED GRAVURE AND DOCTORING MEANS THEREFOR. SEPT. 7, 1976. BEL. 0841855.
3,980,404.—XEROGRAPHIC APPARATUS HAVING IMPROVED FLUID DISPENSING MEMBER. SEPT. 14, 1976.
3,985,663.—CONDUCTIVE INKS CONTAINING QUATERNARY AMMONIUM COMPOUNDS. OCT. 12, 1976.
3,993,023.—COATED FILAMENT WOUND INK APPLICATOR ROLL. NOV. 23, 1976.
3,993,024.—FILAMENT WOUND INK APPLICATOR ROLL. NOV. 23, 1976.
3,994,726.—LAMINATED FLEXIBLE PHOTORECEPTOR. NOV. 30, 1976. GRB. 1429517.
4,002,476.—METHOD OF DEVELOPING RESILIENT PHOTOCONDUCTIVE ELEMENT. JAN. 11, 1977. GRB. 1429517.
4,004,931.—CONSTANT VISCOSITY INKS. JAN. 25, 1977.
4,007,983.—IMPROVED LIQUID DEVELOPER CLEANING MEANS. FEB. 15, 1977.
4,017,174.—DEVELOPER ASSEMBLY SUPPORT. APR. 12, 1977.
4,023,967.—ELECTROPHOTOGRAPHIC LIQUID DEVELOPMENT METHOD IN WHICH A UNIFORM SUBSTANTIAL INTERFACE CONTACT. BEL. 0819537, GRB. 1429518.
4,024,292.—PROCESS FOR DEVELOPING LATENT ELECTROSTATIC IMAGES WITH INK. MAY 17, 1977. BEL. 0816553, GRB. 1452556.
4,024,838.—DEVELOPER LIQUID SUPPLY DEVICE. MAY 24, 1977.
4,027,964.—IMAGING METHOD AND APPARATUS. JUNE 7, 1977. ARG. 0190535, BEL. 0777714, CAN. 0949825, FRA. 7201000, GRB. 1374501, ITL. 0946355, MEX. 0124981.
4,040,827.—DEVELOPMENT IMAGING METHODS. AUG. 9, 1977.
4,042,415.—METHOD FOR SCRAPING LIQUIDS FROM A MOVING SURFACE. AUG. 16, 1977.
4,043,657.—BLADE FOR METERING LIQUID DEVELOPER. AUG. 23, 1977. GRB. 1501464.
4,047,943.—METHOD OF DEVELOPING ELECTROSTATIC LATENT IMAGES WITH CONDUCTIVE LIQUID DEVELOPER. SEPT. 13, 1977.
4,049,344.—ELECTROSTATIC IMAGING SYSTEM. SEPT. 20, 1977.
4,059,444.—LIQUID DEVELOPMENT USING CONDUCTIVE INKS. NOV. 22, 1977. GRB. 1495785.
4,089,683.—LIQUID DEVELOPER CLEANING MEANS. MAY 16, 1978.
4,105,445.—RESILIENT ARCUATE SURFACE CONTAINING PHOTOCONDUCTOR. AUG. 8, 1978. GRB. 1476355.
4,126,711.—CHARGE PATTERN DEVELOPMENT METHOD & APPARATUS. NOV. 21, 1978. GRB. 1484712.
4,161,360.—LIQUID DEVELOPMENT APPARATUS. JULY 17, 1979.

Class 5F

3,166,432.—IMAGE DEVELOPMENT. JAN. 19, 1965. CAN. 0675704, FRA. 1260844, GER. 1185062, GRB. 0959668, JAP. 0401040.
3,203,394.—XEROGRAPHIC DEVELOPMENT APPARATUS. AUG. 31, 1965. CAN. 0757572, GER. 1497070, GRB. 1026704, JAP. 0464922.
3,216,844.—METHOD OF DEVELOPING ELECTROSTATIC IMAGES WITH PHOTOCONDUCTIBLE DONOR MEMBER. NOV. 9, 1965. CAN. 0794035, GRB. 1024983.
3,301,152.—XEROGRAPHIC COPYING APPARATUS. JAN. 31, 1967.
3,332,396.—XEROGRAPHIC DEVELOPING APPARATUS WITH CONTROLLED CORONA MEANS. JULY 25, 1967. AUS. 0287695, BEL. 0656893, CAN. 0775061, FRA. 1419973, GER. 1288915, GRB. 1060679, ITL. 0745583.
3,375,806.—XEROGRAPHIC DONOR DEVELOPMENT APPARATUS. APR. 2, 1968.
3,376,852.—DIELECTRIC BELT DEVELOPING. APR. 9, 1968. CAN. 0859028, GRB. 1214512, JAP. 0919364.
3,405,682.—XEROGRAPHIC DEVELOPMENT APPTS WITH WEB LOADING MEANS TO REMOVE RESIDUAL DEVELOPER. OCT. 15, 1968. GRB. 1102282.
3,606,864.—DONOR ASSEMBLY. SEPT. 21, 1971. CAN. 0903461, GRB. 1280951, MEX. 0116025.
3,613,636.—ELECTROGRAPHIC DEVELOPER. OCT. 19, 1971. GRB. 1282991.
3,635,196.—PNEUMATICALLY CONTROLLED SEAL. JAN. 18, 1972.
3,645,618.—VACUUM NOZZLE TO REMOVE AGGLOMERATES ON A TONER APPLICATOR. FEB. 29, 1972. CAN. 0949823.
3,696,783.—AUTOMATED TOUCHDOWN DEVELOPMENT SYSTEM. OCT. 10, 1972. CAN. 0949822, GRB. 1373666.
3,696,785.—DEVELOPMENT APPARATUS. OCT. 10, 1972. CAN. 0949824, GRB. 1373665.
3,697,169.—ELECTROSTATIC RECORDING APPARATUS AND METHOD. OCT. 10, 1972. CAN. 0954292, GRB. 1322681.
3,703,157.—MTHD/APPRTS FOR FRMNG UNFRM LYR OF PWDR DVELPR ON A SURFACE. NOV. 21, 1972.
3,707,389.—LATENT ELECTROSTATIC IMAGE DEVELOPMENT. DEC. 26, 1972. AUS. 0457281, BEL. 0777721, CAN. 0949827, FRA. 7201007, GRB. 1375048, ITL. 0946354.

3,729,334.—IMAGING PROCESS. APR. 24, 1973.
3,739,748.—DONOR FOR TOUCHDOWN DEVELOPMENT. JUNE 19, 1973.
3,759,222.—MICROFIELD DONOR WITH CONTINUOUSLY REVERSING MICROFIELDS. SEPT. 18, 1973. BEL. 0780091, CAN. 0951596, FRA. 7208102, GRB. 1385966, ITL. 0949779.
3,848,566.—DONOR APPARATUS. NOV. 19, 1974.
3,866,574.—XEROGRAPHIC DEVELOPING APPARATUS. FEB. 18, 1975, FRA. 7405248, GRB. 1458766.
3,881,927.—HALF TONE DEVELOPMENT PROCESS FOR TOUCHDOWN SYSTEM IN ELECTROSTATIC IMAGING. MAY 6, 1975. GRB. 1419926.
3,884,185.—COATED WIRE DEVELOPER BRUSH. MAY 20, 1975.
3,890,929.—XEROGRAPHIC DEVELOPING APPARATUS. JUNE 24, 1975.
3,893,418.—XEROGRAPHIC DEVELOPING APPARATUS. JULY 8, 1975.
3,900,002.—DONOR APPARATUS. AUG. 19, 1975.
3,914,460.—DEVELOPMENT UTILIZING ELECTRIC FIELDS. OCT. 21, 1975.
3,929,098.—TONER LOADING FOR TOUCHDOWN DONOR. DEC. 30, 1975.
3,970,042.—COLOR DEVELOPMENT APPARATUS. JULY 20, 1976.
3,997,688.—DEVELOPING AN ELECTRICAL IMAGE. DEC. 14, 1976.
3,998,185.—MICROFIELD DONORS WITH TONER AGITATION AND THE METHODS OF THEIR MANUFACTURE. DEC. 21, 1976.
3,999,515.—SELF SPACING MICROFIELD DONORS. DEC. 28, 1976.
3,999,849.—TOUCHDOWN AMBIPOLAR DEVELOPMENT. DEC. 28, 1976.
4,003,333.—DEVELOPMENT SYSTEM. JAN. 18, 1977.
4,006,981.—HALF TONE DEVELOPMENT FOR TOUCHDOWN SYSTEM. FEB. 8, 1977. GRB. 1419926.
4,011,834.—TOUCHDOWN ELECTROSTATIC DEVELOPMENT APPARATUS. MAR. 15, 1977.
4,017,648.—TONER AGITATION THROUGH MICROFIELD DONOR. APR. 12, 1977.
4,025,185.—APPLICATOR MEMBER. MAY 24, 1977. GRB. 1436098.
4,040,827.—DEVELOPMENT IMAGING METHODS. AUG. 9, 1977.
4,067,295.—MAGNETIC MICROFIELD DONOR SYSTEM. JAN. 10, 1978.
4,092,165.—METHOD OF MAKING A DONOR MEMBER MOLD. MAY 30, 1978.
4,105,445.—RESILIENT ARCUATE SURFACE CONTAINING PHOTOCONDUCTOR. AUG. 8, 1978. GRB. 1476355.
4,114,261.—METHOD OF MANUFACTURE OF A XEROGRAPHIC MICROFIELD DONOR. SEPT. 19, 1978. GRB. 1515938.
4,136,637.—CONTINUOUS CONTRAST DEVELOPMENT SYSTEM. JAN. 30, 1979.
4,144,061.—TRANSFER DEVELOPMENT USING A FLUID SPACED DONOR MEMBER. MAR. 13, 1979.
4,149,486.—TRANSFER DEVELOPMENT APPARATUS USING SELF-SPACING DONOR MEMBER. APR. 17, 1979.
4,164,372.—OUT OF CONTACT TOUCHDOWN. AUG. 14, 1979. CAN. 1044958. GRB. 1484417.

Class 5G

3,380,437.—TRANSVERSELY RECIPROCATING FLUIDIZED BED DEVELOPMENT APPARATUS. APR. 30, 1968. ARG. 0179553, BRA. 0088502, CAN. 0821491, CHL. 0022941, CLB. 0016330, MEX. 0095936, PRU. 0009315, URG. 0008636, VZL. 0020996.
3,393,663.—FLUIDIZING ELECTRODE DEVELOPMENT APPARATUS. JULY 23, 1968. ARG. 0171118, AUS. 0411962, BEL. 0701467, CAN. 0821472, CHL. 0024009, CLB. 0017645, CZC. 0157025, DNK. 0123998, EGR. 0072982, FRA. 1531274, GRB. 1193443, ISR. 0028298, ITL. 0805956, LXB. 0054062, MEX. 0095697, NOR. 0127834, NZL. 0149432, PLD. 0069038, PTG. 0048069, SAF. 0674268, SPN. 0343103, STZ. 0481406, SWD. 0322414, USR. 0353449, VZL. 0021059.
3,396,700.—XEROGRAPHIC TONER DISPENSING APPARATUS. AUG. 13, 1968. CAN. 0852126, GRB. 1231868, JAP. 0752503.
3,574,660.—ORBITAL DEVELOPER STREAM DEVELOPMENT. APR. 13, 1971. CAN. 0845076, GRB. 1193277.
3,641,977.—APPARATUS FOR AGITATING DEVELOPER MATERIAL WITHIN A HOUSING. FEB. 15, 1972. CAN. 0917405, GRB. 1342684.
3,682,137.—J-SHELL DEVELOPER HOUSING. AUG. 8, 1972. CAN. 0949820, GRB. 1342782.
3,900,001.—DEVELOPING APPARATUS. AUG. 19, 1975. CAN. 0970631, GRB. 1381049.

Class 5H

3,484,265.—TRANSVERSELY RECIPROCATING FLUIDIZED BED DEVELOPMENT METH. DEC. 16, 1969.
3,503,776.—XEROGRAPHIC DEVELOPMENT. MAR. 31, 1970. CAN. 0828694, FRA. 1511809, GRB. 1182291, ITL. 0793692, MEX. 0098765.
3,611,991.—VIBRATING BED DEVELOPING APPARATUS WITH ELECTROMAGNETIC DEVELOPER AGITATOR. OCT. 12, 1971. AUS. 0445409, BEL. 0755605, CAN. 0911707, EGR. 0083516, FRA. 7032503, GRB. 1264780, ITL. 0907435, JAP. 0745766, SPN. 0383333, STZ. 0521615, SWD. 0361956, TIW. 0007201, USR. 0371738.
3,613,637.—DEVELOPER FOR ELECTROSTATIC IMAGES. OCT. 19, 1971. AUS. 0448238, BEL. 0752034, CAN. 0911702, FRA. 7021987, GRB. 1301157, ITL. 0894180, SWD. 0358975.
3,621,816.—INTERLACED VIBRATING ELECTRODE. NOV. 23, 1971. CAN. 0914397, GRB. 1316614, JAP. 0835102.
3,623,454.—FLUIDIZED BED DEVELOPMENT APPARATUS. NOV. 30, 1971. CAN. 0895208, GRB. 1272373, JAP. 0731616.
3,654,900.—FLUIDIZED DEVELOPMENT OF ELECTROSTATIC IMAGES. APR. 11, 1972. CAN. 0949821, GRB. 1357149.
3,685,486.—FLUIDIZED DEVELOPMENT APPARATUS. AUG. 22, 1972. CAN. 0921693, GRB. 1316306, JAP. 0746925.
3,754,531.—FLUIDIZED DEVELOPMENT APPARATUS. AUG. 28, 1973.
3,844,252.—SHEET REMOVAL DEVICE. OCT. 29, 1974. BEL. 0814943, CAN. 1000749, FRA. 7415957, ITL. 1012669, PNM. 0003193, PTG. 0061701, SPN. 0426423, SWD. 7406337.

Class 5I

3,838,922.—APPARATUS FOR SENSING THE QUANTITY OF RECLAIMED DEVELOPER MATERIAL. OCT. 1, 1974. CAN. 0992600, GRB. 1414319.
3,841,265.—DEVELOPER ASSEMBLY FOR ELECTROSTATIC COPIER. OCT. 15, 1974.
3,844,252.—SHEET REMOVAL DEVICE. OCT. 29, 1974. BEL. 0814943, CAN. 1000749, FRA. 7415957, ITL. 1012669, PNM. 0003193, PTG. 0061701, SPN. 0426423, SWD. 7406337.
3,873,197.—APPARATUS FOR REGULATING THE TONER CONCENTRATION IN A ELECTROPHOTOGRAPHIC DEVICE. MAR. 25, 1975.
3,926,338.—THERMALLY INSENSITIVE PARTICLE CONCENTRATION CONTROLLER. DEC. 16, 1975.
4,065,031.—PROGRAMMABLE DEVELOPMENT CONTROL SYSTEM. DEC. 27, 1977.

Class 5I 1

3,316,875.—XEROGRAPHIC DEVELOPING APPARATUS. MAY 2, 1967.
3,331,355.—XEROGRAPHIC DEVELOPING APPARATUS. JULY 18, 1967. CAN. 0793224, FRA. 1465811, GRB. 1069351, ITL. 0778708.
3,349,750.—XEROGRAPHIC DEVELOPMENT APPARATUS. OCT. 31, 1967. CAN. 0819050, FRA. 1516053, GRB. 1165377, ITL. 0788953, JAP. 0547202, MEX. 0093862.
3,356,248.—CONTAINER WITH A ROTATABLE CLOSURE. DEC. 5, 1967. CAN. 0825091, GRB. 1166618.
3,550,556.—DEVELOPMENT APPARATUS. DEC. 29, 1970. ARG. 0180677, AUS. 0442279, BEL. 0726571, BRA. 6905449, CAN. 0882576, CZC. 0157055, EGR. 0076888, FRA. 1604314, GRB. 1252494, ITL. 0854006, JAP. 0731247, MEX. 0109983, PNM. 0001770, RMN. 0054558, SAF. 0069180, SPN. 0362037, STZ. 0498431, SWD. 0351059, USR. 0372851, VZL. 0023724.
3,661,118.—ELECTROSTATIC DEVELOPMENT. MAY 9, 1972. CAN. 0951107, GRB. 1359234.
3,662,711.—DEVELOPMENT APPARATUS. MAY 16, 1972. CAN. 0945757, GRB. 1345253.
3,663,291.—CASCADE DEVELOPMENT. MAY 16, 1972.
3,687,270.—CONVEYOR ASSEMBLY. AUG. 29, 1972. CAN. 0952464, GRB. 1376231.
3,717,122.—MAGNETIC GATE. FEB. 20, 1973. CAN. 0960031, GRB. 1377023.
3,943,887.—HYBRID CROSSMIXER. MAR. 16, 1976.
3,947,107.—PARTIALLY SUBMERGED ACTIVE CROSSMIXER. MAR. 30, 1976. BEL. 0835370.

3,973,518.—CROSS MIXING BLENDING CHAMBER FOR ELECTROSTATIC PROCESSORS AND THE LIKE. AUG. 10, 1976.
3,995,590.—BLENDING CHAMBER FOR ELECTROSTATIC PROCESSORS. DEC. 7, 1976.
3,999,512.—ELECTROSTATIC DEVELOPMENT SYSTEM WITH PASSIVE STORAGE CAPACITY. DEC. 28, 1976. BEL. 0823656.
4,040,386.—RETRACTABLE EDGE SEALS FOR ELECTTROSTATOGRAPHIC DEVELOPMENT SYSTEMS. AUG. 9, 1977.
4,056,076.—DEVELOPER MIXING SYSTEM. NOV. 1, 1977.

Class 5I 2

3,941,280.—APPARATUS FOR CONTROLLING DEVELOPER EFFICIENCY. MAR. 2, 1976.
3,983,841.—TONER RECLAIM CONVEYOR. OCT. 5, 1976.
4,011,835.—TONER CONVEYOR. MAR. 15, 1977.
4,133,458.—TONER DISPENSER ARRANGEMENT. JAN. 9, 1979.
4,133,459.—DEFORMABLE TONER DISPENSER WITH FLOW RATE CONTROLLER. JAN. 9, 1979.
4,135,642.—WIPER ARRANGEMENT FOR TONER LEVEL SENSOR. JAN. 23, 1979.
4,142,655.—TONER DISPENSING AND SUPPLY ARRANGEMENT. MAR. 6, 1979.
4,188,907.—PARTICLE DISPENSER WITH A MAGNETICALLY DRIVEN AGITATOR. FEB. 19, 1980.

Class 5I 2A

3,250,439.—XEROGRAPHIC TONER DISPENSER. MAY 10, 1966. CAN. 0815453, GRB. 1126197, JAP. 0512654.
3,337,072.—LOADER. AUG. 22, 1967. CAN. 0825092, GRB. 1166619, JAP. 0605648.
3,385,500.—TONER PACKAGE. MAY 28, 1968. CAN. 0864337, GRB. 1189147, JAP. 0931680.
3,619,279.—TONER RECEIVING MEMBER. NOV. 9, 1971.
3,622,054.—TONER DISPENSER IMPROVEMENT. NOV. 23, 1971. CAN. 0911705.
3,722,471.—TONER METER DEVICE. MAR. 27, 1973. CAN. 0951108, GRB. 1370009.
3,740,288.—METHOD OF PREPARING A TONER DISPENSER. JUNE 19, 1973.
3,920,155.—PARTICLE LEVEL INDICATOR. NOV. 18, 1975.
3,924,566.—REPRODUCTION MACHINE WITH MEANS FOR SOLIDIFYING THE RECLAIM TONER. DEC. 9, 1975.
3,941,470.—A TONER PARTICLE DISPENSER. MAR. 2, 1976.
3,951,539.—ELECTROSTATIC REPRODUCTION MACHINE WITH IMPROVED TONER DISPENSING APPARATUS. APR. 20, 1976.
3,954,331.—TONER DISPENSER. MAY 4, 1976.
3,979,022.—MONITORING DEVICE—MAGNETIC POWERED ALARM DEVICE. SEPT. 7, 1976. BEL. 0801607, CAN. 0982841, FRA. 7300103, GRB. 1431574, ITL. 0990693, SWD 7308931.
4,034,701.—PARTICLE DISPENSER—01TONER DISPENSER—EPIC. JULY 12, 1977. BEL. 0801243, CAN. 0979209, FRA. 7323735, GRB. 1,438,799, ITL. 0990691, SWD. 7,308,929.

Class 5I 2B

3,389,863.—XEROGRAPHIC TONER DISPENSER. JUNE 25, 1968. CAN. 0835862, FRA. 1497062, GRB. 1171303, ITL. 0787552, JAP. 0589523, MEX. 0093821, VZL. 0024004.
3,390,664.—XEROGRAPHIC TONER DISPENSING APPARATUS. JULY 2, 1968. CAN. 0852124, GRB. 1208593, JAP. 0608323.
3,619,279.—TONER RECEIVING MEMBER. NOV. 9, 1971.

Class 5I 2C

3,951,539.—ELECTROSTATIC REPRODUCTION MACHINE WITH IMPROVED TONER DISPENSING APPARATUS. APR. 20, 1976.
3,956,108.—ANTI-PLUGGING DEVICE FOR AUTOMATIC DEVELOPABILITY CONTROL SYSTEMS. MAY 11, 1976.
3,958,878.—ELECTROSTATIC PROCESSOR HOUSING INTERCHANGABLE RESERVOIRS FOR SUPPING & RECLAIMING TONER. MAY 25, 1976.
3,974,944.—TONER DISPENSER. AUG. 17, 1976.
4,065,031.—PROGRAMMABLE DEVELOPMENT CONTROL SYSTEM. DEC. 27, 1977.
4,163,614.—CLOSED LOOP PARTICLE DISPENSER. AUG. 7, 1979.
4,173,294.—DISPENSER HAVING RECIPROCATING PADDLES FOR DISCHARGING PARTICLES THEREFROM. NOV. 6, 1979.

Class 5I 2C 1

RE.27,876.—DISPENSING APPARATUS. JAN. 8, 1974. CAN. 0868818.
3,300,101.—TONER DISPENSER. JAN. 24, 1967. CAN. 0800856, GRB. 1152671, JAP. 0524530.
3,339,807.—TONER CONTAINER AND DISPENSER. SEPT. 5, 1967. CAN. 0842133, GRB. 1165953, JAP. 0547201.
3,396,700.—XEROGRAPHIC TONER DISPENSING APPARATUS. AUG. 13, 1968. CAN. 0852126, GRB. 1231868, JAP. 0752503.
3,453,045.—XEROGRAPHIC DEVELOPMENT APPARATUS. JULY 1, 1969. CAN. 0852125, FRA. 1559973, GRB. 1213493, HUN. 0156188, ITL. 0832847, JAP. 0602169, USR. 0371739.
3,538,887.—ELECTROSCOPIC TONER POWDER DISPENSER. NOV. 10, 1970.
3,542,089.—TONER DISPENSER. NOV. 24, 1970. CAN. 0885916.
3,596,807.—DISPENSING APPARATUS—REISSUED D2184R RE27876. AUG. 3, 1971. CAN 0868818.
3,608,792.—APPARATUS FOR DISPENSING FINELY DIVIDED PARTICULATE MATERIAL. SEPT. 28, 1971. ARG. 0182132, ATR. 0311790, AUS. 0456817, BEL. 0745602, CAN. 0869923, CHL. 0025844, DNK. 0128336, FRA. 7003984, GRB. 1302401, GUA. 0002512, ITL. 0886722, MEX. 0119828, NZL. 0159117, PNM. 0002240, SAF. 0700806, SPN. 0376265, STZ. 0526801, SWD. 7001426, TIW. 0005927, VZL. 0032924.
3,654,900.—FLUIDIZED DEVELOPMENT OF ELECTROSTATIC IMAGES. APR. 11, 1972. CAN. 0949821, GRB. 1357149.
3,655,033.—VIBRATORY BOWL—TONER DISPENSER. APR. 11, 1972.
3,752,576.—TRANSPORT FOR PARTICULATE MATERIAL. AUG. 14, 1973.
3,896,279.—TNE LVL DETCTR ASSEMBLY INC MAGNETICLY RESPONSIVE SWITCH ACTUATD BY DFERENTL LOADED BLADE TYPE. JULY 22, 1975.
3,901,187.—DEVELOPER RETONING APPARATUS. AUG. 26, 1975.
3,920,154.—TONER LEVEL DETECTOR. NOV. 18, 1975.
3,951,539.—ELECTROSTATIC REPRODUCTION MACHINE WITH IMPROVED TONER DISPENSING APPARATUS. APR. 20, 1976.

Class 5I 2C 2

3,348,522.—AUTOMATIC TONER CONTROL SYSTEM. OCT. 24, 1967. CAN. 0799397, GRB. 1135743, JAP. 0942998, MEX. 0089292.
3,348,523.—AUTOMATIC TONER CONTROL SYSTEM. OCT. 24, 1967. CAN. 0799399, GRB. 1139299, JAP. 5371200.
3,376,853.—ELECTROSTATIC TONER CONTROL. APR. 9, 1968. CAN. 0819051, GRB. 1177232, JAP. 0568731.
3,376,854.—AUTOMATIC TONER DISPENSING CONTROL—SEE D2425 FOR RE27480. APR. 9, 1968. ARG. 0164003, ATR. 0279352, AUS. 0416453, BEL. 0699115, CAN. 0866349, CHL. 0022942, CLB. 0016441, CZC. 0160633, DNK. 0116114, EGR. 0067870, EIR. 0031100, FRA. 1524678, GRB. 1186775, GRK. 0033692, IND. 0110760, ISR. 0028022, ITL. 0796438, JAP. 0800113, LXB. 0053713, MEX. 0099990, NOR. 0128039, NZL. 0148850, PAK. 0118694, PLD. 0069794, PLP. 0005554, PRU. 0009348, PTG. 0047758, SAF. 0673111, SPN. 0340983, STZ. 0473409, SWD. 6707266, TRK. 0014624, UAR. 0008620, URG. 0008538, USR. 0494887, VZL. 0023661.
3,430,606.—ELECTROSCOPIC PARTICLE SENSOR. MAR. 4, 1969. BEL. 0726274, BRA. 6805010, CAN. 0891683, FRA. 1597321, ITL. 0866513, MEX. 0107599, PNM. 0001400, USR. 0336895, VZL. 0023727.
3,498,500.—LEVEL SENSOR. MAR. 3, 1970. CAN. 0912851, GRB. 1251128, JAP. 0663856.
3,520,445.—DIELECTRIC LEVEL SENSOR. JULY 14, 1970. CAN. 0895527, GRB. 1239856, JAP. 0663857.
3,526,338.—METHOD AND CONTROLLER FOR DISPENSING ELECTROSCOPIC MATERIAL—AUTOMATIC TONER DISPENSER CONTROL—24. SEPT. 1, 1970. ARG. 0181603, AUS. 0436922, BEL. 0726274, BRA. 6804852, CAN. 0895526, GRB. 1216690, ITL. 0866513, JAP. 0752505, MEX. 0107687, PNM. 0001419, SPN. 0362036, SWD. 0355090, USR. 0336895, VZL. 0023723.
3,527,387.—DEVELOPER REPLENISHING PROGRAMMING SYSTEM. SEPT. 8, 1970. CAN. 0922772, GRB. 1233814, JAP. 0758340.

3,536,042.—XEROGRAPHIC DEVELOPMENT APPARATUS. OCT. 27, 1970.
3,604,939.—TONER SENSING APPARATUS—TONER SENSOR ASSEMBLY-GENIE. SEPT. 14, 1971. CAN. 0915751, GRB. 1260379, JAP. 0752502.
3,635,373.—AUTOMATIC DEVELOPABILITY CONTROL APPARATUS. JAN. 18, 1972. ARG. 0190708, AUS. 0445334, BEL. 0760748, CAN. 0923546, CHL. 0025916, EGR. 0091983, FRA. 7047630, GRB. 1336590, GUA. 0002624, ITL. 0913903, JAP. 0795149, MEX. 0116721, PNM. 0002092, SPN. 0386750, STZ. 0524843, SWD. 0362511, TIW. 0007197.
3,659,556.—PROGRAMMABLE TONER DISPENSER. MAY 2, 1972. BEL. 0771423, CAN. 0936681, FRA. 7130743, GRB. 1358448, ITL. 0934010.
3,692,403.—AUTOMATIC CONTROL OF TONER CONCENTRATIONS. SEPT. 19, 1972. CAN. 0979635, GRB. 1409578.
3,693,581.—TONER DISPENSER CIRCUIT FOR ELECTROSTATOGRAPHIC APPARATUS. SEPT. 26, 1972.
3,727,065.—AUTOMATIC DEVELOPABILITY CONTROL SYSTEM. APR. 10, 1973. ARG. 0185080, AUS. 0440458, BEL. 0757430, CAN. 0934806, CHL. 0025915, CZC. 0169811, FGR. 0086755, FRA. 7038235, GRB. 1318895, ITL. 0908953, JAP. 0795148, MEX. 0116873, PNM. 0002179, SPN. 0384593, STZ. 0514168, SWD. 0369114, TIW. 0007196, VZL. 0032004.
3,754,821.—AUTOMATIC DEVELOPMENT CONTROL. AUG. 28, 1973. ARG. 0195188, AUS. 0467463, BEL. 0793425, CAN. 1004725, FRA. 7246724, GRB. 1411448, ITL. 0972845, JAP. 0552838, MEX. 0128209, NZL. 0169419, SAF. 7219030, SPN. 0410096, STZ. 0552838, SWD. 7216891, VZL. 0032066.
3,757,999.—AUTOMATIC DEVELOPABILITY CONTROL SYSTEM FOR ELECTROSTATIC RECORDING APPARATUS. SEPT. 11, 1973. ARG. 0185080, AUS. 0440458, BEL. 0757430, CAN. 0934806, CHL. 0025915, CZC. 0169811, EGR. 0086755, FRA. 7038235, GRB. 1318895, ITL. 0908953, JAP. 0795148, MEX. 0116873, PNM. 0002179, SPN. 0384593, STZ. 0514168, SWD. 0369114, TIW. 0007196, VZL. 0032004.
3,778,146.—ILLUMINATING APPARATUS. DEC. 11, 1973.
3,801,196.—TONER CONCENTRATION REGULATING APPARATUS. APR. 2, 1974.
3,814,516.—HUMIDITY COMPENSATED CONTROL DEVICE. JUNE 4, 1974. CAN. 1012202, GRB. 1458558.
3,825,337.—COLOR BALANCE DISPLAY. JULY 23, 1974. CAN. 1006766.
3,834,806.—PARTICLE LEVEL INDICATOR. SEPT. 10, 1974.
3,872,825.—PARTICLE CONCENTRATION DETECTOR. MAR. 25, 1975. CAN. 1014598.
3,873,002.—TONER DISPENSER LOGIC CONTROL. MAR. 25, 1975. BEL. 0813798, CAN. 1008915, GRB. 1457565, ITL. 1009837.
3,893,408.—TONER DISPENSER SYSTEM. JULY 8, 1975.
3,894,799.—APPARATUS FOR MONITORING COPY QUALITY. JULY 15, 1975.
3,931,792.—ABRASIVE LIQUID DEVELOPING APPARATUS. JAN. 13, 1976.
3,936,176.—DEVICE FOR MAINTAINING A DEVELOPABILITY REGULATING APPARATUS CONTAMINANT FREE. FEB. 3, 1976.
3,960,444.—ELECTROPHOTOGRAPHIC PRINTING MACHINE. JUNE 1, 1976.
3,969,114.—METHOD FOR MONITORING COPY QUALITY. JULY 13, 1976.
3,999,119.—MEASURING TONER CONCENTRATION. DEC. 21, 1976.
4,026,643.—APP & MTHD FOR MEASUREMENT OF THE RTO OF TNR PRTLCS ELCTRSTATC CHRGE TO TNR PRTLE MASS IN ELCTSTC. MAY 31, 1977.
4,032,225.—COPYING MACHINES. JUNE 28, 1977.
4,043,293.—DEVELOPABILITY REGULATING APPARATUS. AUG. 23, 1977.
4,076,149.—SLAVE DRIVER FOR TONER DISPENSER WITH STRIKER. FEB. 28, 1978.
4,079,266.—ELECTRONIC CONTROL FOR AUTOMATIC DEVELOPABILITY SYSTEM. MAR. 14, 1978.
4,082,445.—TONER CONTROL SYSTEM FOR AN ELECTROSTATIC REPRODUCTION MACHINE. APR. 4, 1978. BEL. 848542.
4,111,151.—MULTI-PARTICLE DEVELOPABILITY REGULATING SYSTEM. SEPT. 5, 1978.
4,113,371.—A COLOR DEVELOPMENT SYSTEM. SEPT. 12, 1978.

Class 5J

3,804,510.—IMAGING DEVELOPING SYSTEM. APR. 16, 1974.

3,889,637.—SELF-BIASED DEVELOPMENT ELECTRODE AND REPRODUCING MACHINE EMPLOYING SAME. JUNE 17, 1975. FRA. 7422700, GRB. 1464886.
3,893,415.—DEVELOPING APPARATUS. JULY 8, 1975. ARG. 0204387, BEL. 0789238, BRA. 0088405, CAN. 0991394, FRA. 7232380, GRB. 1409815, ITL. 0970948, MEX. 0128578, SPN. 0408654, STZ. 0554551, SWD. 7214863, VZL. 0033578.
3,908,037.—IMAGE DEVELOPING TECHNIQUES. SEPT. 23, 1975. CAN. 0980181, GRB. 1406292.
3,965,861.—SEPARATED ROLLER LIQUID DEVELOPMENT. JUNE 29, 1976.

Class 5J 1

3,241,466.—ELECTROSTATIC PHOTOGRAPHY. MAR. 22, 1966.
3,424,131.—ELECTRODED CASCADE DEVELOPMENT SYSTEM. JAN. 28, 1969. CAN. 0848084, FRA. 1463050, GER. 1497214, GRB. 1123618, ITL. 0729637, JAP. 0499007.
3,606,863.—DEVELOPMENT ELECTRODE. SEPT. 21, 1971. CAN. 0905099, GRB. 1296756, JAP. 0774497.
3,611,992.—CLEANUP ELECTRODE. OCT. 12, 1971. CAN. 0916431.
3,642,515.—LIQUID DEVELOPMENT UTILIZING A CURVILINEAR DEVELOPMENT ELECTRODE. FEB. 15, 1972.
3,648,658.—DEVELOPING APPARATUS. MAR. 14, 1972.
3,651,784.—LOW POTENTIAL DEVELOPMENT ELECTRODE. MAR. 28, 1972. CAN. 0917900.
3,670,700.—DEVELOPMENT ELECTRODE. JUNE 20, 1972. ARG. 0185528, ATR. 0324836, AUS. 0445848, BEL. 0752935, CAN. 0916430, CHL. 0025837, DNK. 0126729, EGR. 0085926, FRA. 7024671, GRB. 1304065, IND. 0127310, ITL. 0900194, JAP. 0731613, MEX. 0115164, NOR. 0131437, NZL. 0160642, PLP. 0006295, PNM. 0001951, PTG. 0054071, SAF. 0704531, SPN. 0381380, STZ. 0513439, SWD. 0358976, TIW. 0007161, USR. 0503555, VZL. 30684.
3,741,156.—XEROGRAPHIC DEVELOPMENT APPARATUS. JUNE 26, 1973.
3,778,144.—XEROGRAPHIC DEVELOPMENT ELECTRODE APPARATUS. DEC. 11, 1973. CAN. 0972550, GRB. 1393144.
3,784,299.—DARK DECAY RETARDATION. JAN. 8, 1974.
3,790,397.—RETONING CARRIER BEADS IN THE DEVELOPMENT ZONE. FEB. 5, 1974.
3,795,222.—DEVELOPMENT ELECTRODE SYSTEM. MAR. 5, 1974.
3,816,114.—ELECTRO-PHOTOGRAPHIC METHOD. JUNE 11, 1974.
3,817,212.—ELECTROSTATOGRAPHIC LIQUID DEVELOPMENT APPARATUS. JUNE 18, 1974.
3,832,975.—ELECTROPHOTOGRAPHIC APPARATUS. SEPT. 3, 1974.
3,955,976.—DEVELOPING METHOD IN ELECTROPHOTOGRAPHY-DEVELOPING METHOD IN ELECTROPHOTOGRAPHY. MAY 11, 1976. GRB. 1329143.

Class 5J 2

3,416,494.—XEROGRAPHIC DEVELOPMENT ELECTRODE. DEC. 17, 1968. CAN. 0882575, GER. 1816690, GRB. 1249664, JAP. 0653014.
3,621,816.—INTERLACED VIBRATING ELECTRODE. NOV. 23, 1971. CAN. 0914397, GRB. 1316614, JAP. 0835102.

Class 5J 3

3,349,676.—XEROGRAPHIC DEVELOPMENT ELECTRODE APPARATUS. OCT. 31, 1967. CAN. 0814087, FRA. 1473662, GER. 1522685, GRB. 1144766, ITL. 0764006, JAP. 0513609, MEX. 0090133.
3,866,572.—FORAMINOUS ELECTROSTATOGRAPHIC TRANSFER SYSTEM. BEL. 0815546, CAN. 1009503, FRA. 7418641, GRB. 1448386, ITL. 1012842, SPN. 0426760.

Class 5J 5

3,284,224.—CONTROLLED XEROGRAPHIC DEVELOPMENT. NOV. 8, 1966. CAN. 0751349, GRB. 1038801, JAP. 0640353.
3,438,705.—AUTOMATIC XEROGRAPHIC DEVELOPMENT CONTROL. APR. 15, 1969. GRB. 1207830.
3,611,982.—DEVELOPMENT ELECTRODE CONTROL APPARATUS. OCT. 12, 1971. ARG. 0185532, AUS. 0450067, BEL. 0755383, BRA. 0088402, CAN. 0913353, CHL. 0025834, EGR. 0090283, FRA. 7032350, GRB. 1303148, ITL. 0901777, JAP. 0758461, MEX. 0117918,

PLD. 80986, PNM. 0002245, SPN. 0383058, STZ. 0523526, SWD. 0361750, TIW. 0007514, USR. 0473382, VZL. 0032598.

3,696,784.—XEROGRAPHIC DEVELOPMENT APPARATUS. OCT. 10, 1972. BEL. 0776601, CAN. 0951109, FRA. 7146241, GRB. 1369648, ITL. 0943905.

3,719,169.—PLURAL ELECTRODE DEVELOPMENT APPARATUS. MAR. 6, 1973. CAN. 0979299, GRB. 1381910.

3,784,397.—IMAGING SYSTEM. JAN. 8, 1974.

3,788,739.—IMAGE COMPENSATION METHOD AND APPARATUS FOR ELECTROPHOTOGRAPHIC DEVICES. JAN. 29, 1974.

3,805,739.—CONTROLLING MULTIPLE VOLTAGE LEVELS FOR ELECTROSTATIC PRINTING. APR. 23, 1974. CAN. 0972552, GRB. 1382710.

3,810,165.—ELECTRONIC DISPLAY DEVICE. MAY 7, 1974.

3,815,988.—IMAGE DENSITY CONTROL APPARATUS. JUNE 11, 1974. ARG. 0205710, BEL. 0815209, FRA. 7416693, GRB. 1458707, ITL. 1012346, SAF. 0743132.

3,818,864.—IMAGE DEVELOPING APPARATUS. JUNE 25, 1974. CAN. 0980181, GRB. 1406292.

3,888,666.—REVERSAL DEVELOPING METHOD USING PHOTOCONDUCTIVE DEVELOPING ELECTRODE. JUNE 10, 1975.

3,889,637.—SELF-BIASED DEVELOPMENT ELECTRODE AND REPRODUCING MACHINE EMPLOYING SAME. JUNE 17, 1975. FRA. 7422700, GRB. 1464886.

4,084,538.—AMBIENT TEMPERATURE COMPENSATING DEVICE FOR POWER SOURCE APPARATUS FOR DEVELOPING ELECTRODE. APR. 18, 1978.

Class 5K

3,212,889.—XEROGRAPHIC CONTRAST CONTROL. OCT. 19, 1965. GRB. 1008897.

3,251,685.—METHOD OF CONTROLLING CONTRAST IN A XEROGRAPHIC REPRODUCTION PROCESS. MAY 17, 1966. CAN. 0707047, GER. 1265583, JAP. 0446813.

3,540,806.—HALF TONING METH AND APPARATUS FOR SOLID AREA COVERAG. NOV. 17, 1970. CAN. 0892754, GRB. 1253888.

3,669,072.—DEVELOPER APPARATUS. JUNE 13, 1972. CAN. 0930539, GRB. 1343141.

3,707,947.—CROSS-CHANNEL MIXER. JAN. 2, 1973. ARG. 0200109, ATR. 0322982, AUS. 0457444, BEL. 0776661, CAN. 0946145, CHL. 0027259, DNK. 0132048, EGR. 0099026, FRA. 7145340, GRB. 1372731, ITL. 0943876, MEX. 0127352, PNM. 0002585, SAF. 0718308, SPN. 0397852, STZ. 0557534, TIW. 0005832, USR. 0402245.

3,808,026.—LIQUID DEVELOPMENT OF ELECTROSTATIC LATENT IMAGE. APR. 30, 1974.

3,817,748.—CONTRAST CONTROL IN ELECTROSTATIC COPYING UTILIZING LIQUID DEVELOPMENT. JUNE 18, 1974. CAN. 0991246, GRB. 1406794.

3,865,080.—TONER PICKOFF APPARATUS. FEB. 11, 1975. GRB. 1430876.

3,865,612.—XEROGRAPHIC DEVELOPMENT METHOD. FEB. 11, 1975.

3,887,367.—METHOD FOR TEMPERATURE STABILIZING PHOTORECEPTORS. JUNE 3, 1975.

3,889,637.—SELF-BIASED DEVELOPMENT ELECTRODE AND REPRODUCING MACHINE EMPLOYING SAME. JUNE 17, 1975. FRA. 7422700, GRB. 1464886.

3,893,413.—XEROGRAPHIC DEVELOPING APPARATUS. JULY 8, 1975.

3,911,865.—TONER PICKOFF APPARATUS. OCT. 14, 1975.

3,946,920.—VACUUM SYSTEM CONTROL. MAR. 30, 1976.

3,960,444.—ELECTROPHOTOGRAPHIC PRINTING MACHINE. JUNE 1, 1976.

3,965,861.—SEPARATED ROLLER LIQUID DEVELOPMENT. JUNE 29, 1976.

3,994,725.—MEANS FOR ENHANCING REMOVAL OF BACKGROUND TONER PARTICLE. NOV. 30, 1976.

3,997,259.—APPARATUS FOR REDUCING IMAGE BACKGROUND IN ELECTROSTATIC REPRODUCTION MACHINES. DEC. 14, 1976.

4,023,900.—VARIABLE SPEED LIQUID DEVELOPMENT ELECTROSTATOGRAPHIC APPARATUS. MAY 17, 1977.

Class 5K 5

4,161,357.—PHOTORECEPTOR HEATING APPARATUS. JULY 17, 1979.

Class 5L

3,245,823.—ELECTROSTATIC IMAGE DEVELOPMENT APPARATUS. APR. 12, 1966.

3,926,824.—ELECTROSTATOGRAPHIC DEVELOPER COMPOSITION. DEC. 16, 1975. ARG. 0192480, AUS. 0466319, BEL. 0793098, CAN. 0985552, FRA. 7245403, GRB. 1417179, ITL. 0973327, SPN. 0410171, STZ. 0028663, SWD. 7216977.

Class 5M

3,712,728.—REVERSAL DEVELOPMENT. JAN. 23, 1973. BEL. 0777718, CAN. 0949826, FRA. 7201004, GRB. 1374831, ITL. 0946351.

3,772,012.—REVERSAL DEVELOPMENT USING POLAR LIQUID DEVELOPERS. NOV. 13, 1973. BEL. 0777718, CAN. 0949826, FRA. 7201004, GRB. 1374831, ITL. 0946351.

3,800,744.—ELECTROSTATIC LATENT IMAGE DEVELOPING APPARATUS. APR. 2, 1974.

3,877,963.—REVERSAL LIQUID DEVELOPING USING A DEVELOPMENT ELECTRODE AND CORONA CHARGING. APR. 15, 1975.

3,888,666.—REVERSAL DEVELOPING METHOD USING PHOTOCONDUCTIVE DEVELOPING ELECTRODE. JUNE 10, 1975.

3,901,698.—METHOD OF REVERSAL DEVELOPMENT USING TWO ELECTROSTATIC DEVELOPERS. AUG. 26, 1975.

Class 5N

3,907,693.—LIQUID DEVELOPER FOR ELECTROPHOTOGRAPHY. SEPT. 23, 1975.

3,907,694.—NON-VOLATILE CONDUCTIVE INKS. SEPT. 23, 1975.

3,954,640.—ELECTROSTATIC PRINTING INKS. MAY 4, 1976. BEL. 0816553, GRB. 1452556.

3,963,486.—ELECTROPHOTOGRAPHIC IMAGING PROCESS EMPLOYING EPOXY-ESTER CONTAINING LIQUID DEVELOPER. JUNE 15, 1976.

4,024,292.—PROCESS FOR DEVELOPING LATENT ELECTROSTATIC IMAGES WITH INK. MAY 17, 1977. BEL. 0816553, GRB. 1452556.

4,047,943.—METHOD OF DEVELOPING ELECTROSTATIC LATENT IMAGES WITH CONDUCTIVE LIQUID DEVELOPER. SEPT. 13, 1977.

4,075,391.—PRODUCTION OF FERRITE ELECTROSTATOGRAPHIC CARRIER MATERIAL HAVING IMPROVED PROPERTIES. FEB. 21, 1978. BEL. 847571, FRA. 7632899, SPN. 452858.

4,076,640.—PREPARATION OF SPHEROIDIZED PARTICLES. FEB. 28, 1978. SPN. 445496.

4,077,804.—METHOD OF PRODUCING TONER PARTICLES BY IN-SITU POLYMERIZATION AND IMAGING PROCESS. MAR. 7, 1978.

4,252,671.—PREPARATION OF COLLOIDAL IRON DISPERSIONS BY THE POLYMER-CATALYZED DECOMPOSITION OF IRON CARBONYL AND IRON ORGANOCARBONYL COMPOUNDS. FEB. 24, 1981.

4,252,672.—PREPARATION OF COLLOIDAL IRON DISPERSIONS BY THE POLYMER-CATALYZED DECOMPOSITION OF IRON CARBONYL AND IRON ORGANOCARBONYL COMPOUNDS. FEB. 24, 1981.

Class 5N 1A

3,609,082.—ELECTROSTATIC DEV PARTICLS CONTAING RESIN, COLORANT, METAL SALT AND PHTHALATE. SEPT. 28, 1971. ARG. 0165457, BAH. 0000094, BOL. 3389B, CAN. 0902985, CHL. 0023567, CLB. 0017680, DOR. 0001462, ECD. 0000168, ELS. 0001065, JAM. 0001897, MEX. 0100808, PNM. 0002016, PRU. 0009862, TRK. 0015594, URG. 0009288.

3,720,617.—AN ELECTROSTATIC DEVELOPER CONTAINING MODIFIED SILICON DIOXIDE PARTICLES. MAR. 13, 1973. ARG. 0189666, ATR. 0321104, AUS. 0463862, BEL. 0767359, CAN. 0941212, CHL. 0026780, EGR. 0093928, FRA. 7118950, GRB. 1347318, ITL. 0926884, MEX. 2131403, NZL. 0163670, PNM. 0002393, PRU. 0011824, STZ. 0567746, SWD. 0366402, TIW. 0006149, USR. 0460634, VZL. 0032423.

3,819,367.—IMAGING SYSTEM. JUNE 25, 1974. ARG. 0189666, ATR. 0321104, AUS. 0463862, BEL. 0767359, CAN. 0941212, CHL. 0026780, EGR. 0093928, FRA. 7118950, GRB. 1347318, ITL. 0926884, MEX. 0131403, NZL. 0163670, PNM. 0002393, PRU. 0011824, STZ. 0567746, SWD. 0366402, TIW. 0006149, USR. 0460634, VZL. 0032423.

3,820,986.—LIQUID DEVELOPMENT METHOD AND MATERIALS. JUNE 28, 1974.

3,833,364.—METHOD OF DEVELOPING ELECTROSTATIC IMAGE CHARGE. SEPT. 3, 1974.

3,850,830.—LIQUID DEVELOPER CONTAINING EXTENDER BODY PARTICLES. NOV. 26, 1974.

3,900,588.—NON-FILMING DUAL ADDITIVE DEVELOPER. AUG. 19, 1975. BEL. 0825924.

4,051,077.—NON FILMING DUAL ADDITIVE DEVELOPER. SEPT. 27, 1977. AUS. 487989, BEL. 825924, FRA. 7505307, GRB. 1494360, SPN. 435074.

Class 5N 1B

3,577,345.—SOLID XEROGRAPHIC DEVELOPER. MAY 4, 1971. ARG. 0172448, ATR. 0323417, AUS. 0424173, BAH. 0000095, BEL. 0716084, BOL. 003270B, CAN. 0902983, CHL. 0025923, CLB. 0017674, DOR. 0001461, ELS. 0001064, FRA. 1567731, GRB. 1232117, GRK. 0037628, GUA. 0002003, HOL. 0148714, IND. 0116209, ISR. 0030116, ITL. 0851653, JAM. 0001848, JAP. 0623002, LXB. 0056197, MEX. 0119320, NOR. 0131653, NZL. 0164353, PNM. 0002062, PRU. 0009911, PTG. 0049749, SPN. 0354686, STZ. 0516180, SWD. 0338238, TIW. 0005096, TRD. 0000057, TRK. 0015620, URG. 0009286, VZL. 0023666.

3,590,000.—SOLID DEVELOPER FOR LATENT ELECTROSTATIC IMAGES. JUNE 29, 1971. ARG. 0172453, ATR. 0288860, AUS. 0480033, BAH. 0000093, BEL. 0716083, BOL. 3399B, CAN. 0902984, CHL. 0024050, DOR. 0001460, ECD. 0000198, ELS. 0001062, FRA. 1567721, GER. 1772570, GRB. 1232118, GRK. 0037629, GUA. 0002095, HOL. 0151523, IND. 0116210, ISR. 0030117, ITL. 0851651, JAM. 0002094, JAP. 0635407, LXB. 0056196, MEX. 0104566, NZL. 0164356, PLP. 0007690, PNM. 0002083, PRU. 0009495, PTG. 0049748, SPN. 0354685, STZ. 0519737, SWD. 0357071, TIW. 0004940, TRD. 0000058, TRK. 0015606, URG. 0009287, VZL. 0032392.

3,609,082.—ELECTROSTATIC DEV PARTICLS CONTAING RESIN, COLORANT, METAL SALT AND PHTHALATE. SEPT. 28, 1971. ARG. 0165457, BAH. 0000094, BOL. 3389B, CAN. 0902985, CHL. 0023567, CLB. 0017680, DOR. 0001462, ECD. 0000168, ELS. 0001065, JAM. 0001897, MEX. 0100808, PNM. 0002016, PRU. 0009862, TRK. 0015594, URG. 0009288.

3,635,704.—IMAGING SYSTEM. JAN. 18, 1972. ALB. 0004133, ARG. 0176978, ATR. 0303521, AUS. 0440759, BEL. 0727560, BRA. 0088093, BUR. 0000042, CAM. 0000463, CAN. 0867697, CHL. 0026254, COR. 000949A, DNK. 0131403, EGR. 0078899, EIR. 0032632, FRA. 6902174, GNR. 0000042, GRB. 1259514, GRK. 0039240, IND. 0119583, ISR. 0031503, ITL. 0871510, LAS. 0000199, LIB. 00P7269, LXB. 0057849, MEX. 0106332, MLG. 0003056, MLW. 00MW869, MNC. 8156975, MRC. 0014724, NZL. 0155208, PAK. 0120859, PLP. 0008511, PNM. 0001676, PRU. 0010443, PTG. 0051063, RHD. 4169529, RMN. 0055464, SAF. 0069995, SPN. 0363127, STZ. 0513431, SWD. 0342921, SYA. 0002477, TGR. 0000551, TIW. 0005257, UAR. 0009525, USR. 0396887, VTM. 0001805, VZL. 0023744, ZMB. 0186974.

3,652,319.—CYCLIC IMAGING SYSTEM. MAR. 28, 1972. AUS. 0441527, BEL. 0761029, CAN. 0944010, FRA. 7047634, GRB. 1336739, ITL. 0913957, JAP. 0771819, SWD. 0363175.

3,653,893.—IMAGING SYSTEM. APR. 4, 1972.

3,655,374.—IMAGING PROCESS EMPLOYING NOVEL SOLID DEVELOPER MATERIAL. APR. 11, 1972.

3,681,107.—DEVELOPMENT OF ELECTROSTATOGRAPHIC IMAGES. AUG. 1, 1972.

3,748,127.—TREATMENT OF REUSABLE PHOTOCONDUCTIVE SURFACES WITH LEWIS ACIDS OR BASES. JULY 24, 1973.

3,820,778.—VACUUM STRIPPING ROLL WITH ROTARY PICKUP SLOTS. JUNE 28, 1974. CAN. 1010081, GRB. 1430856.

3,856,692.—LIQUID ELECTROSTOGRAPHIC DEVELOPER COMPOSITIONS. DEC. 24, 1974. CAN. 0940361, GRB. 1332674.

3,900,588.—NON-FILMING DUAL ADDITIVE DEVELOPER. AUG. 19, 1975. BEL. 0825924, SPN. 0435074.

3,900,589.—AN ELECTROSTATOGRAPHIC IMAGING PROCESS. AUG. 19, 1975. AUS. 0467835, BEL. 0802879, FRA. 7328589, GRB. 1437041, ITL. 0991465, SPN. 0417382.

3,948,654.—ELECTROSTATOGRAPHIC PROCESS. APR. 6, 1976.

3,983,045.—THREE COMPONENT DEVELOPER COMPOSITION. SEPT. 28, 1976. ARG. 0194232, ATR. 0334199, AUS. 0462045, BEL. 0789987, CHL. 0027625, FRA. 7236617, GRB. 1402009, ITL. 0968815, MEX. 0125231, NZL. 0168638, PNM. 0002796, SAF. 0727225, SPN. 0407564, STZ. 0028096, SWD. 7213035, TIW. 0007666, VZL. 0012802.

4,002,570.—ELECTROPHOTOGRAPHIC DEVELOPER WITH POLYVINYLLIDENE FLUORIDE ADDITIVE. JAN. 11, 1977.

4,072,521.—AMIDES OF W AND CIS ALKENOIC ACIDS IN IMAGING PROCESS AND ELEMENT. FEB. 7, 1978.

4,073,649.—DI CARBOXYLIC ACID BIS AMIDES AND IMPROVED IMAGING PROCESS. FEB. 14, 1978.

4,076,641.—W- AND CIS ALKENOIC ACID AMIDES IN ELECTROSTATOGRAPHIC DEVELOPERS. FEB. 28, 1978.

4,099,968.—DICARBOXYLIC ACID BIS-AMIDES IN ELECTROSTATIC IMAGING COMPOSITIONS AND PROCESSES.

4,147,541.—ELECTROSTATIC IMAGING MEMBER WITH ACID LUBRICANT. APR. 3, 1979. AUS. 467835. BEL. 802879. CAN. 995963. FRA. 7328588. GRB. 1437041. ITL. 991465. SPN. 417382. USR. 637099.

Class 5N 2

3,844,815.—FORON YELLOW AS A TONER COLORANT. OCT. 29, 1974. BEL. 808754, CAN. 1003264, FRA. 7345058, ITL. 1000870.

4,078,930.—DEVELOPER COMPOSITIONS COMPRISING TONER AND CARRIER. MAR. 14, 1978. FRA. 763634.

4,264,697.—IMAGING SYSTEM. APR. 28, 1981. SPN. 481167.

Class 5N 2A

3,723,114.—THERMOSETTING ELCTRSTGRPHC DVLPR OF CARRIER/PREPOLYMER OF DIALLYL PHTHALATE ISOPHTHALATE AND MXTR. MAR. 27, 1973. ARG. 0185089, BEL. 0762507, CAN. 0970195, FRA. 7104349, GRB. 1344197, ITL. 0918244, MEX. 0122234.

3,806,339.—LIQUID DEVELOPER COMPOSITION. APR. 23, 1974.

3,900,800.—HIGH VOLTAGE AMPLIFIER. AUG. 19, 1975.

3,903,320.—ELECTROSTATOGRAPHIC DEVELOPMENT METHOD FOR PRESSURE FIXABLE TONERS. SEPT. 2, 1975.

3,909,259.—COLOR ELECTROPHOTOGRAPHIC IMAGING PROCESS UTILIZING SPECIFIC CARRIER-TOWER COMBINATIONS. SEPT. 30, 1975. CAN. 1005678, FRA. 7345057, GRB. 1435218.

3,942,979.—IMAGING SYSTEM. MAR. 9, 1976.

3,965,021.—ELECTROSTATOGRAPHIC DEVELOPMENT-POLYBLEND TONERS. JUNE 22, 1976.

3,967,962.—DEVELOPING WITH TONER POLYMER HAVING CRYSTALLINE AND AMORPHOUS SEGMENTS. JULY 6, 1976.

3,969,251.—DEVELOPER MIXTURE. JULY 13, 1976.

4,013,572.—HYBRID FIX SYSTEM INCORPORATING PHOTOGRADABLE POLYMERS. MAR. 22, 1977.

4,049,447.—IMAGING SYSTEM. SEPT. 20, 1977. ARG. 195092, AUS. 468938, BEL 791376, CAN. 986768, FRA 7239133, GRB. 1411446, ITL. 972536, MEX. 131270, SPN. 409973, STZ. 28528, VZL. 33138.

4,104,066.—COLD PRESSURE FIX TONERS FROM POLYCAPROLACTONE. AUG. 1, 1978.

4,186,003.—HYBRID FIX SYSTEM INCORPORATING PHOTODEGRADABLE POLYMERS. JAN. 29, 1980.

Class 5N 2A 1

3,239,465.—XEROGRAPHIC DEVELOPER. MAR. 8, 1966. CAN. 0630295, GRB. 0952166.

Class 5N 2A 2

3,239,465.—XEROGRAPHIC DEVELOPER. MAR. 8, 1966. CAN. 0630295, GRB. 0952166.

Class 5N 2B

3,533,835.—ELECTROSTATOGRAPHIC DEVELOPER MIXTURE. OCT. 13, 1970. ARG. 0181296, AUS. 0417746, BEL. 0704918, CAN. 0900769, CHL. 0024909, CLB. 0017825, FRA. 1540695, GRB. 1211865, IND. 0112449, ITL. 0814857, MEX. 0100137, PRU. 0009323, SWD. 0323583, URG. 0009011, VZL. 0023668.

3,591,503.—ELECTROSTATOGRAPHIC DEVELOPER. JULY 6, 1971. ARG. 0172143, ATR. 0287491, AUS. 0418556, BEL. 0713751, CAN. 0879020, CHL. 0024256, CLB. 0017933, FRA. 1560849, GRB. 1225980, GRK. 0038397, IND. 0115457, ITL. 0833710, LXB. 0055904, MEX. 0111625, NOR. 0128297, NZL. 0152196, PLP. 0008847, PRU. 0009319, PTG. 0049455, SAF. 0682386, SPN. 0352810, STZ. 0508903, SWD. 0333868, URG. 0009139, VZL. 0023688.

3,595,794.—ELECTROSTATOGRAPHIC DEVELOPER. JULY 27, 1971. ARG. 0169109, ATR. 0290986, AUS. 0418156, BEL. 0713752, CAN. 0879021, CHL. 0024482, FRA. 1582855, GRB. 1227471, IND. 0115458, ITL. 0883043, LXB. 0055894, MEX. 0115899, NOR. 0128036, NZL. 0152195, PLP. 0007966, PRU. 0009335, PTG. 0049154, SAF. 0682358, SPN. 0352811, STZ. 0505410, SWD. 0331633, URG. 0009283, VZL. 0023687.

3,627,522.—DEVELOPER COMPOSITION AND METHOD OF USE. DEC. 14, 1971.
3,672,928.—ELECTROSTATOGRAPHIC DEVELOPERS HAVING CARRIERS COMPRISING POLYSTER COATED CORES. JUNE 27, 1972. ARG. 0184669, BEL. 0762415, CAN. 0941209, FRA. 7103845, GRB. 1344365, ITL. 0918191, JAP. 0764506.
3,704,066.—REFLEX ESPOSURE MEDIUM. NOV. 28, 1972.
3,725,283.—ELECTROSTATOGRAPHIC DEVELOPER CONTAINING UNCOATED GLASS CERAMIC CARRIER PARTICLES. APR. 3, 1973. BEL. 0777720, CAN. 0973745, FRA. 7201006, GRB. 1376457, ITL. 0946358.
3,767,578.—CARRIER MATERIAL FOR ELECTROSTATOGRAPHIC. OCT. 23, 1973. ARG. 0198052, ATR. 0322978, AUS. 0461667, BEL. 0784452, CAN. 0986351, CHL. 0027640, FRA. 7220690, GRB. 1397445, ITL. 0959791, MEX. 0127643, SPN. 0403664, STZ. 0546969, SWD. 7207389, TIW. 0006042, VZL. 0032064.
3,847,604.—ELECTROSTATIC IMAGING PROCESS USING MODULAR CARRIERS. NOV. 12, 1974. ARG. 0198052, ATR. 0322978, AUS. 0461667, BEL. 0784452, CAN. 0986351, CHL. 0027640, FRA. 7220690, GRB. 1397445, ITL. 0959791, MEX. 0127643, SPN. 0403664, STZ. 0546969, SWD. 7207389, TIW. 0006042, VZL. 0032064.
3,849,127.—AN ELECTROSTATOGRAPHIC PROCESS IN WHICH COATED CARRIER PARTICLES ARE USED. NOV. 19, 1974.
3,857,792.—ELECTROSTATIC DEVELOPER MIXTURE WITH A COATED CARRIER. DEC. 31, 1974.
3,914,181.—ELECTROSTATOGRAPHIC DEVELOPER MIXTURES COMPRISING FERRITE CARRIER BEADS. OCT. 21, 1975. ARG. 0194244, AUS. 0471676, BEL. 0785913, CAN. 1000477, GRB. 1398871, ITL. 0962400, MEX. 0126285, SPN. 0404423, VZL. 0032940.
3,923,503.—ELECTROSTATIC LATEN IMAGE DEVELOPMENT EMPLOYING STEEL CARRIER PARTICLES. DEC. 2, 1975. ARG. 0181848, ATR. 0316987, AUS. 0456820, BAH. 0000162, BEL. 0752230, CAN. 0940360, CHL. 0025833, EGR. 0095180, FRA. 7021985, GRB. 1312806, ITL. 0894287, JAP. 0728825, MEX. 0121681, NOR. 0131364, NZL. 0160479, PLD. 0081013, PNM. 0002264, PTG. 0053978, SAF. 0704155, SPN. 0380913, STZ. 0548625, SWD. 0351058, TIW. 0006837, USR. 0457235.
3,926,824.—ELECTROSTATOGRAPHIC DEVELOPER COMPOSITION. DEC. 16, 1975. ARG. 0192480, AUS. 0466319, BEL. 0793098, CAN. 0985552, FRA. 7245403, GRB. 1417179, ITL. 0973327, SPN. 0410171, STZ. 0028663, SWD. 7216977.
3,939,086.—HIGHLY CLASSIFIED OXIDIZED DEVELOPER MATERIAL. FEB. 17, 1976. ARG. 0181848, ATR. 0316987, AUS. 0456820, BAH. 0000162, BEL. 0752230, CAN. 0940360, CHL. 0025833, EGR. 0095180, FRA. 7021985, GRB. 1312806, ITL. 0894287, JAP. 0728825, MEX. 0121681, NOR. 0131364, NZL. 0160479, PLD. 0081013, PNM. 0002264, PTG. 0053978, SAF. 0704155, SPN. 0380913, STZ. 0548625, SWD. 0351058, TIW. 0006837, USR. 0457235.
3,942,979.—IMAGING SYSTEM. MAR. 9, 1976.
3,969,251.—DEVELOPER MIXTURE. JULY 13, 1976.
4,018,601.—ELECTROSTATOGRAPHIC MAGNETIC BRUSH IMAGING PROCESS EMPLOYING CARRIER BEADS COMPRISING HIGH NICK. APR. 19, 1977.
4,051,077.—NON FILMING DUAL ADDITIVE DEVELOPER. SEPT. 27, 1977. AUS. 487989, BEL. 825924, FRA. 7505307, GRB. 1494360, SPN. 435074.
4,065,305.—XEROGRAPHIC DEVELOPER. DEC. 27, 1977.
4,206,065.—ELECTROSTATOGRAPHIC DEVELOPER COMPOSITIONS USING TERPOLYMER COATED CARRIER. JUNE 3, 1980.

Class 5N 3

4,185,916.—COMPOSITE DEVELOPER PARTICLES AND APPARATUS FOR USING SAME. JAN. 29, 1980.
4,264,700.—METHOD OF FORMING MAGNETIC TONER PARTICLES HAVING A CONCENTRATION OF MAGNETIC PARTICLES GREATER THAN 45 PERCENT BY WEIGHT BY DISPERSION POLYMERIZATION TECHNIQUES. APR. 28, 1981.

Class 5N 4

3,467,634.—ORGANOSILICON TERPOLYMERS AND PROCESS. SEPT. 16, 1969. ARG. 0165758, AUS. 0417109, BEL. 0702403, BRA. 6790950, CAN. 0857389, FRA. 1534183, GRB. 1200756, HOL. 0826202, ITL. 0826202, JAP. 0671041, MEX. 0100136, NOR. 0125392, SPN. 0343902, STZ. 0484210, SWD. 0339752, VZL. 0025437.
3,526,533.—COATED CARRIER PARTICLES. SEPT. 1, 1970. ARG. 0161341, AUS. 0418867, BEL. 0702404, CAN. 0878413, FRA. 1534184, GRB. 1205051, ITL. 0826203, JAP. 0578401, MEX. 0120334, NOR. 0122818, SPN. 0343903, STZ. 0486054, SWD. 0308987, VZL. 0032393.
3,533,835.—ELECTROSTATOGRAPHIC DEVELOPER MIXTURE. OCT. 13, 1970. ARG. 0181296, AUS. 0417746, BEL. 0704918, CAN. 0900769, CHL. 0024909, CLB. 0017825, FRA. 1540695, GRB. 1211865, IND. 0112449, ITL. 0814857, MEX. 0100137, PRU. 0009323, SWD. 0323583, URG. 0009011, VZL. 0023668.
3,713,819.—XEROGRAPHIC IMAGING AND DEVELOPMENT USING METAL OXIDE CARRIER PART. JAN. 30, 1973.
3,730,707.—METHOD OF DEVELOPINO LATENT IMAGES. MAY 1, 1973.
3,752,666.—ELECTROSTATIC IMAGING PROCESS USING CARRIER BEADS CONTAINING CONDUCTIVE PARTICLES. AUG. 14, 1973.
3,833,366.—CARRIER COMPOSITIONS. SEPT. 3, 1974. BEL. 0748633, CAN. 0904641, FRA. 7012584, GRB. 1319787, ITL. 0899337, JAP. 0709043.
3,839,029.—ELECTROSTATOGRAPHIC DEVELOPMENT WITH FERRITE DEVELOPER MATERIALS. OCT. 1, 1974. ARG. 0194244, AUS. 0471676, BEL. 0785913, CAN. 1000477, GRB. 1398871, ITL. 0962400, MEX. 0126285, SPN. 0404423, VZL. 0032940.
3,849,182.—HIGHLY SHAPE-CLASSIFIED OXIDIZED LOW CARBON HYPEREUTECTOID ELECTROSTATOGRAPHIC STEEL CARRIER PA. NOV. 19, 1974. ARG. 0181848, ATR. 0316987, AUS. 0456820, BAH. 0000162, BEL. 0752230, CAN. 0940360, CHL. 0025833, EGR. 0095180, FRA. 7021985, GRB. 1312806, ITL. 0894287, JAP. 0728825, MEX. 0121681, NOR. 0131364, NZL. 0160479, PLD. 0081013, PNM. 0002264, PTG. 0053978, SAF. 0704155, SPN. 0380913, STZ. 0548625, SWD. 0351058, TIW. 0006837, USR. 0457235.
3,850,663.—CELLULOSE COATED CARRIERS. NOV. 26, 1974. ARG. 0183677, AUS. 0458322, BEL. 0763987, CAN. 0941210, EGR. 0091603, FRA. 7108585, GRB. 1345027, ITL. 0922292, MEX. 0120027, PNM. 0002440, SAF. 0711547, STZ. 0557050, SWD. 0359940, TIW. 0008177, VZL. 0032931.
3,850,676.—COATED CARRIER PARTICLES FOR ELECTROSTATOGRAPHIC DEVELOPMENT. NOV. 26, 1974.
3,900,587.—IMAGING PROCESS EMPLOYING TREATED CARRIERS PARTICLES. AUG. 19, 1975.
3,903,320.—ELECTROSTATOGRAPHIC DEVELOPMENT METHOD FOR PRESSURE FIXABLE TONERS. SEPT. 2, 1975.
3,916,064.—DEVELOPER MATERIAL. OCT. 28, 1975.
3,916,065.—ELECTROSTATOGRAPHIC CARRIER PARTICLES. OCT. 28, 1975.
3,929,657.—STOICHIOMETRIC FERRITE CARRIERS. DEC. 30, 1975. BEL. 0819535.
3,945,823.—ELECTROSTATOGRAPHIC REVERSAL DEVELOPMENT WITH DEVELOPER COMPRISING POLY(P-XYLYLENE) COATED CARR. MAR. 23, 1976. BEL. 0807597, CAN. 1003262, GRB. 1453595, MEX. 0133543, SPN. 0420696.
3,947,371.—DEVELOPER MATERIAL WITH POLYPXYLYLENE-COATED CARRIER. MAR. 30, 1976. BEL. 0807597, CAN. 1003262, GRB. 1453595, MEX. 0133543, SPN. 0420696.
3,989,648.—IMAGING SYSTEM. NOV. 2, 1976. CAN. 1007923.
3,996,392.—HUMIDITY-INSENSIVE FERRITE DEVELOPER MATERIALS. DEC. 7, 1976. BEL. 0847571.
4,007,293.—MECHANICALLY VIABLE DEVELOPER MATERIALS. FEB. 8, 1977.
4,019,903.—ELECTROSTATIC DEVELOPMENT. APR. 26, 1977. BEL. 0777715, CAN. 0973746, FRA. 7201001, GRB. 1376456, ITL. 0946359.
4,035,520.—IMAGING SYSTEMS. JULY 12, 1977.
4,039,331.—CARRIER BEAD COATING COMPOSITIONS. AUG. 2, 1977.
4,040,969.—HIGH SURFACE AREA CARRIER. AUG. 9, 1977. BEL. 829639, GRB. 1497732, SPN. 438084.
4,042,517.—ELECTROSTATOGRAPHIC DEVELOPER MIXTURE CONTAINING A THERMOSET ACRYLIC RESIN COATED CARRIER. AUG. 16, 1977.
4,042,518.—STOICHIOMETRIC FERRITE CARRIERS. AUG. 16, 1977. BEL. 819535, CAN. 1033978, FRA. 7429829, GRB. 1468841, SPN. 429670.
4,043,929.—ELECTROSTATOGRAPHIC CARRIER COMPOSITION. AUG. 23, 1977.
4,053,310.—DURABLE CARRIER COATING COMPOSITIONS COMPRISING POLYSULFONE. OCT. 11, 1978.
4,057,426.—MAGNETIC TONER WITH A COATED CARRIER. NOV. 8, 1977.
4,058,397.—YELLOW DEVELOPER EMPLOYING A COATED CARRIER. NOV. 15, 1978.

4,065,385.—RENEWABLE CHOW FUSER COATING. DEC. 27, 1977. GRB. 1490252.
4,066,563.—COPPER-TETRA-4-(OCTADECYLSULFONOMIDO) PHTHALOCYANINE ELECTROPHOTOGRAPHIC CARRIER. JAN. 3, 1978.
4,073,965.—YELLOW DEVELOPER EMPLOYING A COATED CARRIER AND IMAGING PROCESS USING SAME. FEB. 14, 1978.
4,076,893.—TRIBO MODIFIED CARRIER MATERIALS VIA ACYLATION. FEB. 28, 1978.
4,078,926.—IMAGING METHOD UTILIZING FUNCTIONALIZED CARRIER MATERIALS. MAR. 14, 1978.
4,079,166.—AMINOLYZED CARRIER COATINGS. MAR. 14, 1978.
4,092,163.—IMAGING PROCESS UTILIZING SILYLATED COATED CARRIER. MAY 30, 1978.
4,094,803.—DEVELOPER COMPOSITION COMPRISING AMINOLYZED COATED CARRIER. JUNE 13, 1978.
4,104,066.—COLD PRESSURE FIX TONERS FROM POLYCAPROLACTONE. AUG. 1, 1978.
4,122,024.—CLASSIFIED TONER MATERIALS. OCT. 24, 1978. BEL. 829719. CAN. 1043149. FRA. 7516758. GRB. 1497731.
4,124,385.—MAGNETIC GLASS CARRIER MATERIALS. NOV. 7, 1978.
4,124,735.—MAGNETIC GLASS CARRIER MATERIALS. NOV. 7, 1978.
4,125,667.—HIGH SURFACE AREA FERROMAGNETIC CARRIER MATERIALS. NOV. 14, 1978. BEL. 829639. CAN. 1041344. FRA. 7516181. GRB. 1497732. SPN. 438084. SWD. 75060434. USR. 623532.
4,126,437.—MAGNETIC GLASS CARRIER MATERIALS. NOV. 21, 1978.
4,126,454.—IMAGING PROCESS UTILIZING HIGH SURFACE AREA CARRIER MATERIALS. NOV. 21, 1978.
4,126,458.—INORGANIC REVERSAL CARRIER COATINGS. NOV. 21, 1978.
4,126,566.—ELECTROSTATIC DEVELOPER MATERIAL. NOV. 21, 1978. CAN. 1055761. GRB. 1494392.
4,147,540.—COLOR ELECTROPHOTOGRAPHIC DEVELOPER SYSTEM EMPLOYING ONE CARRIER HAVING A COATING OF RESIN. APR. 3, 1979. FRA. 7629316. GRB. 1526875.
4,152,279.—TRIBOELECTRIC MODIFIED CARRIER FOR ELECTROSTATOGRAHIC DEVELOPER. MAY 1, 1979.
4,156,607.—CARRIER COATED WITH ACYL MODIFIED STYRENE COPOLYMER, USED IN ELECTROSTATIC IMAGING PROCESS. MAY 29, 1979.
4,179,388.—DEVELOPER MATERIAL. DEC. 18, 1979.
4,238,558.—LOW DENSITY MAGNETIC POLYMER CARRIER MATERIALS PRODUCED BY METAL CARBONYL THERMAL DECOMPOSITION. DEC. 9, 1980.
4,252,881.—DEVELOPER MIXTURE. FEB. 24, 1981. CAN. 1020796, GRB. 1461873.
4,264,648.—LOW SPECIFIC GRAVITY MAGNETIC CARRIER MATERIALS. APR. 28, 1981.
4,265,995.—CARRIER CORE SURFACE TREATMENT. MAY 5, 1981.
4,267,247.—LOW SPECIFIC GRAVITY MAGNETIC CARRIER MATERIALS. MAY 12, 1981.
4,272,184.—CONDUCTIVE CARRIER FOR MAGNETIC BRUSH CLEANER. JUNE 9, 1981.

Class 5N 5

3,788,994.—PRESSURE FIXABLE ELECTROSTATOGRAPHIC TONER. JAN. 29, 1974. ARG. 0200575, BEL. 0793247, CAN. 0985943, FRA. 7244381, GRB. 1406687, ITL. 0973323, SPN. 0410212, STZ. 0028329, VZL. 0032608.
3,804,764.—ELECTROSTATOGRAPHIC PRESSURE SENSITIVE POLYMERIC TONER. APR. 16, 1974. ARG. 0196320, AUS. 0464392, BEL. 0793554, CAN. 1011149, FRA. 7246575, GRB. 1417409, ITL. 0973325, SPN. 0410211, STZ. 0028568.
3,853,778.—TONER COMPOSITION EMPLOYING POLYMER WITH SIDE CHAIN CRYSTALLINITY. DEC. 10, 1974. AUS. 0465653, BEL. 0793639, CAN. 0998869, FRA. 7246888, GRB. 1423291, ITL. 0973330, SPN. 0410267, SWD. 7300003.
3,893,932.—PRESSURE FIXABLE TONER. JULY 8, 1975.
3,893,934.—SOLID DEVELOPER FOR ELECTROSTATIC LATENT IMAGES. JULY 8, 1975.
4,002,776.—IMAGING PROCESS EMPLOYING TONER PARTICLES CONTAINING ARYLSULPONAMIDE FORMALDEHYDE ADDUCT. JAN. 11, 1977.
4,027,048.—ELECTROSTRATOGRAPHIC DEVELOPMENT. ARG. 0196318, AUS. 0467046, BEL. 0792115, CAN. 1001884, FRA. 7239134, ITL. 0973326, MEX. 0128788, SPN. 0410205, STZ. 0028567, VZL. 0033139.
4,049,447.—IMAGING SYSTEM. SEPT. 20, 1977. ARG. 195092, AUS. 468938, BEL. 791376, CAN. 986768, FRA. 7239133, GRB. 1411446, ITL. 972536, MEX. 131270, SPN. 409973, STZ. 28528, VZL. 33138.
4,070,186.—TRIBO MODIFIED TONER MATERIALS VIA SILYLATION AND ELECTROSTATOGRAPHIC IMAGING PROCESS. JAN. 24, 1978.
4,070,296.—TRIBOELECTRICALLY CONTROLLED COVAL- ENTLY DYED TONER MATERIALS. JAN. 24, 1978.
4,078,931.—AMINOLYZED TONER COMPOSITIONS AND IMAGING PROCESS USING SAME. MAR. 14, 1978.
4,079,166.—AMINOLYZED CARRIER COATINGS. MAR. 14, 1978.
4,104,066.—COLD PRESSURE FIX TONERS FROM POLYCAPROLACTONE. AUG. 1, 1978.
4,113482.—IMAGING COMPOSITIONS. SEPT. 12, 1978. CAN. 978790. GRB. 1418292.
4,134,760.—TRIBO MODIFIED TONER MATERIALS VIA ACYLATION. JAN. 16, 1979. GRB. 1525703.
4,135,925.—METHODS OF CHANGING COLOR BY IMAGE DISRUPTION. JAN. 23, 1979. CAN. 978790. GRB. 1418292.
4,139,483.—ELECTROSTATOGRAPHIC TONER COMPOSITION CONTAINING SURFACTANT. FEB. 13, 1979.

Class 5N 5A

3,729,419.—LIQUID DEVELOPER. APR. 24, 1973.
3,804,619.—COLOR ELECTROPHOTOGRAPHIC IMAGING PROCESS. APR. 16, 1974. CAN. 1005678, FRA. 7345057, GRB. 1435218.
3,836,244.—COLOR XEROGRAPHY. SEPT. 17, 1974.
3,841,893.—CHARGE CONTROL AGENTS FOR LIQUID DEVELOPERS. OCT. 15, 1974.
3,897,249.—TONERS FOR PHTHALOCYANINE PHOTORECEPTORS. JULY 29, 1975.
3,900,800.—HIGH VOLTAGE AMPLIFIER. AUG. 19, 1975.
3,909,259.—COLOR ELECTROPHOTOGRAPHIC IMAGING PROCESS UTILIZING SPECIFIC CARRIER-TONER COMBINATIONS. SEPT. 30, 1975. CAN. 1005678, FRA. 7345057, GRB. 1435218.
4,035,310.—YELLOW DEVELOPER. JULY 12, 1977.
4,052,207.—ELECTROSTATOGRAPHIC IMAGING PROCESS. OCT. 4, 1977. SPN. 450203.
4,175,962.—ELECTROSTATOGRAPHIC TONER MATERIAL. NOV. 27, 1979.
4,198,477.—METHOD OF USING ELECTROSTATOGRAPHIC TONER COMPOSITION WITH SURFACTANT. APR. 15, 1980. SPN. 467191.

Class 5N 5B

4,187,194.—ENCAPSULATION PROCESS. FEB. 5, 1980. BEL. 793327, CAN. 1008314, GRB. 1423292, SPN 410265.

Class 5N 6

3,755,177.—PROCESS OF MAKING LIQUID ELECTROSTATIC DEVELOPERS CONTAINING GELATIN. AUG. 28, 1973.
3,908,046.—P-XYLYENE VAPOR PHASE POLYMERIZATION COATING OF ELECTROSTATOGRAPHIC PARTICLES. SEPT. 23, 1975.
3,986,968.—MILLED AND POLAR SOLVENT EXTRACTED LIQUID DEVELOPER. OCT. 19, 1976.
4,223,085.—SEMI-CONDUCTIVE NICKEL CARRIER PARTICLES. SEPT. 16, 1980. CAN. 1103079, GRB. 1571850.

Class 5N 6A

3,507,686.—METHOD OF COATING CARRIER BEADS. APR. 21, 1970. CAN. 0872190, GRB. 1239621, JAP. 0675782.
3,658,500.—METHOD OF PRODUCING GLASS BEADS FOR ELECTROSTATOGRAPHIC DEVELOPERS. APR. 25, 1972. CAN. 0916536, GRB. 1331485.
3,685,113.—DEVELOPER SYSTEM. AUG. 22, 1972. ARG. 0183679, BEL. 0764635, CAN. 0941211, FRA. 7110751, GRB. 1347568, ITL. 0922132, MEX. 0122432.
3,764,310.—METHOD OF PRODUCING ELECTROSTATOGRAPHIC DEVELOPER. OCT. 9, 1973.
3,789,796.—APPARATUS FOR PRODUCING DEVELOPER MATERIALS. FEB. 5, 1974.
3,989,435.—APPARATUS FOR FABRICATING SPHERICALLY SHAPED PARTICLES OF SMALL DIAMETER. NOV. 2, 1976.
4,019,842.—APPARATUS FOR FORMING MAGNETITE ELECTROSTATOGRAPHIC CARRIERS. APR. 26, 1977.
4,075,391.—PRODUCTION OF FERRITE ELECTROSTATOGRAPHIC CARRIER MATERIAL HAVING IMPROVED PROPERTIES. FEB. 21, 1978. BEL. 847571, FRA. 7632899, SPN. 452858.

4,076,640.—PREPARATION OF SPHEROIDIZED PARTICLES. FEB. 28, 1978. SPN. 445496.
4,129,136.—REJUVENATING ELECTROSTATOGRAPHIC CARRIER PARTICLES. DEC. 12, 1978.
4,209,550.—COATING CARRIER MATERIALS BY ELECTROSTATIC PROCESS. JUNE 24, 1980.
4,223,085.—SEMI-CONDUCTIVE NICKEL CARRIER PARTICLES. SEPT. 16, 1980. CAN. 1103079, GRB. 1571850.
4,233,387.—ELECTROPHOTOGRAPHIC CARRIER POWDER COATED BY RESIN DRY-MIXING PROCESS. NOV. 11, 1980. SPN. 488736.
4,245,026.—PRODUCTION OF LOW DENSITY COATED MAONETIC POLYMER CARRIER PARTICULATE MATERIALS. JAN. 13, 1981.
4,246,208.—DUST-FREE PLASMA SPHEROIDIZATION. JAN. 20, 1981.

Class 5N 6B

3,326,848.—SPRAY DRIED LATEX TONERS. JUNE 20, 1967. AUS. 0409084, BEL. 0666056, CAN. 0866260, FRA. 1451366, GRB. 1115653, ITL. 0717377, MEX. 0088140, SWD. 0340046.
3,338,991.—METHOD OF FORMING ELECTROSTATIC TONER PARTICLES. AUG. 29, 1967. FRA. 1450642, GRB. 1115634, HOL. 0142251, ITL. 0717378, JAP. 0539572.
3,502,582.—IMAGING SYSTEMS. MAR. 24, 1970. ARG. 0171952, BEL. 0726571, CAN. 0873934, FRA. 1569382, GRB. 1237095, ITL. 0835554, MEX. 0100704, VZL. 0032414.
3,740,334.—PROCESS OF PREPARING SOLID DEVELOPERS FOR ELECTROSTATIC LATENT IMAGES. JUNE 19, 1973.
3,830,750.—ENCPSLING SBSTNLY SLUBL PRTN OF CORE MATL IN SBSTNLY SLBLE SHELL MATL OF DFRNT SOLUBLTY. AUG. 20, 1974. AUS. 0466018, BEL. 0793246, CAN. 0983328, GRB. 1411954, ITL. 0973317, SPN. 0410224, STZ. 0028527.
3,893,933.—PROCESS FOR PRODUCING ENCAPSULATED TONER COMPOSITION. JULY 8, 1975.
3,968,044.—MILLED LIQUID DEVELOPER. JULY 6, 1976.
3,990,797.—DIFFRACTION MONITORING OF RAYLEIGH MODE JETS. NOV. 9, 1976.
4,016,099.—METHOD OF FORMING ENCAPSULATED TONER PARTICLES. APR. 5, 1977.
4,097,404.—PROCESS FOR PROVIDING ENCAPSULATED TONER COMPOSITION-MICROENCAPSULATION. JUNE 27, 1978.
4,187,194.—ENCAPSULATION PROCESS. FEB. 5, 1980. BEL. 793327, CAN 1008314, GRB. 1423292, SPN. 410265.
4,222,982.—PROCESS OF PREPARING TONER OF IMPROVED MECHANICAL PROPERTIES. SEPT. 16, 1980.
4,233,388.—METHOD FOR MAKING TONER PARTICLES. NOV. 11, 1980.

Class 5O

3,641,981.—APPARATUS FOR CONTROLLING DEVELOPER CHARGE LEVEL. FEB. 15, 1972. CAN. 0914006, GRB. 1338417.
3,654,901.—TONER RECLAIMING SYSTEM. APR. 11, 1972. ATR. 0321720, AUS. 0459286, BEL. 0754425, CAN. 0941881, DNK. 0130262, EGR. 0085711, FRA. 7029147, GRB. 1325455, IND. 0127847, ITL. 0901160, JAP. 1143014, NOR. 0130609, PLD. 0080951, PLP. 0008671, PTG. 0054272, SAF. 0705408, SPN. 0382437, STZ. 0513441, SWD. 0361533, TIW. 0006725, USR. 0373974.
3,664,297.—CENTRIFUGAL DEVELOPMENT APPARATUS AND METHOD. MAY 23, 1972. GRB. 1315565, JAP. 0719144.
3,809,012.—DEVELOPER SEAL. MAY 7, 1974. CAN. 0984133.
3,872,826.—DEVELOPMENT SYSTEM SEAL. MAR. 25, 1975.
3,893,415.—DEVELOPING APPARATUS. JULY 8, 1975. ARG. 0204387, BEL. 0789238, BRA. 0088405, CAN. 0991394, FRA. 7232380, GRB. 1409815, ITL. 0970948, MEX. 0128578, SPN. 0408654, STZ. 0534551, SWD. 7214863, VZL. 0033578.
3,906,899.—DEVELOPER SEAL. SEPT. 23, 1975.
3,915,121.—DEVELOPMENT APPARATUS. OCT. 28, 1975.
3,924,566.—REPRODUCTION MACHINE WITH MEANS FOR SOLIDIFYING THE RECLAIM TONER. DEC. 9, 1975.
3,982,498.—DEVELOPMENT APPARATUS. SEPT. 28, 1976. FRA. 7436713.
4,029,047.—IMPROVED TONER HANDLING SYSTEM. JUNE 14, 1977.
4,039,102.—DEVELOPER DOOR WITH USE COUNTER ON DOOR. AUG. 2, 1977.
4,041,902.—FILTER APPARATUS. AUG. 16, 1977.
4,058,086.—EMISSION CONTROLLER FOR DEVELOPMENT APPARATUS. NOV. 15, 1977.
4,088,481.—EXTENDED RANGE COLOR ELECTROPHOTOGRAPHIC METHOD BY SUPERIMPOSING A HALF-TONE IMAGE ON A LOW. MAY 9, 1978.
4,100,611.—APPARATUS FOR CONTROLLING AIRBORNE PARTICLE EMISSION. JULY 11, 1978.
4,139,296.—CROSS MIXER. FEB. 13, 1979.

Class 5P

3,649,262.—SIMULTANEOUS DEVELOPMENT-CLEANING OF SAME AREA OF AN ELECTROSTATOGRAPHIC IMAGE SUPPORT SURFACE. MAR. 14, 1972. AUS. 0445365, BEL. 0743661, CAN. 0916232, FRA. 6944511, GRB. 1296997, ITL. 0882670, USR. 0358873.
4,029,047.—IMPROVED TONER HANDLING SYSTEM. JUNE 14, 1977.

Class 6

3,753,560.—AUXILIARY SHEET FEEDER-MULTI STATION AUXILIARY PAPER FEEDER-2400. AUG. 21, 1973. AUS. 0466179, BEL. 0793641, CAN. 1000750, FRA. 7300150, GRB. 1402971, ITL. 0973328, SPN. 0410322.
3,833,790.—HEATED PRESSURE FUSING SYSTEM. SEPT. 3, 1974, FRA. 7422884.
4,111,565.—APPARATUS FOR SENSING WHEN PAPER UTILIZED IN A PRINTER HAS BEEN DEPLETED. SEPT. 5, 1978.
4,161,362.—DOCUMENT CODING. JULY 17, 1979.

Class 6A

3,405,635.—PAPER SUPPORT TRAY FOR REPRODUCTION MACHINES. OCT. 15, 1968.
3,406,964.—ADJUSTABLE PACK HOLDER. OCT. 22, 1968. CAN. 0848822, GER. 1270049, GRB. 1158671, JAP. 0914623.
3,415,510.—AUXILIARY SHEET FEEDER. DEC. 10, 1968. CAN. 0831412, GRB. 1235158.
3,458,187.—SHEET HOLDER. JULY 29, 1969. CAN. 0879560, GRB. 1199947.
3,599,966.—SHEET HANDLING APPARATUS. AUG. 17, 1971. CAN. 0921504, JAP. 783765.
3,601,394.—SHEET RETAINING APPARATUS. AUG. 24, 1971. ARG. 0195162, AUS. 0437722, BEL. 0752940, CAN. 0966521, CHL. 0026165, CZC. 0164276, EGR. 0085710, FRA. 7024668, GRB. 1312304, ITL. 0900198, JAP. 0803409, MEX. 0116509, PLD. 0082760, PNM. 0002170, SPN. 0381385, STZ. 0547747, SWD. 0361648, TIW. 0005745, USR. 0493985.
3,651,933.—COPY SHEET PACKAGE. MAR. 28, 1972.
3,687,448.—SHEET FEEDING APPARATUS. AUG. 29, 1972. CAN. 9782161, GRB. 1373810.
3,847,385.—SHEET CONTAINER. NOV. 12, 1974. CAN. 0991208.
3,847,388.—SHEET STACKING METHOD AND APPARATUS. NOV. 12, 1974. CAN. 0996145, FRA. 7344220, GRB. 1440489, MEX. 0134934.
3,848,988.—MOISTURE CONTROL DEVICE. NOV. 19, 1974.
3,857,558.—PAPER CASSETTE DESIGN WITH IRREGULAR BOTTOM. DEC. 31, 1974, CAN. 1010083.
3,883,133.—MOVABLE PACK ADVANCER. MAY 13, 1975.
3,907,283.—SENSING SHEETS ON A SUPPORT SURFACE. SEPT. 23, 1975.
3,921,972.—SHEET STACK RECEPTACLE. NOV. 25, 1975.
3,926,519.—CONTROL DEVICE FOR AN ELECTROPHOTOGRAPHIC PRINTING MACHINE. DEC. 16, 1975.
3,934,870.—SHEET FEEDING DEVICES. JAN. 27, 1976.
3,936,044.—ADJUSTABLE SHEET GUIDE. FEB. 3, 1976.
3,957,366.—SHEET FEEDING APPARATUS. MAY 18, 1976.
3,995,951.—SHEET FEEDING APPARATUS & REPRODUCING MACHINE. DEC. 7, 1976.
4,008,957.—REPRODUCTION MACHINE CONTROL. FEB. 22, 1977.
4,014,537.—AIR FLOATATION BOTTOM FEEDER. MAR. 29, 1977.
4,060,233.—CASSETTE LOADED SHEET FEEDER FOR REPRODUCTION MACHINE. NOV. 29, 1977.
4,060,234.—CARTRIDGE TRAY FOR USE IN A COPYING MACHINE. NOV. 29, 1977.
4,075,391.—PRODUCTION OF FERRITE ELECTROSTATOGRAPHIC CARRIER MATERIAL HAVING IMPROVED PROPERTIES. FEB. 21, 1978. BEL. 847571, FRA. 7632899, SPN. 452858.
4,086,007.—DUAL PURPOSE DOCUMENT AND COPY SHEET FEED CASSETTE. APR. 25, 1978.
4,290,246.—PAPER FEEDING SYSTEM. FEB. 26, 1980.
4,191,467.—DUAL MODE CATCH TRAY. MAR. 4, 1980.

4,241,991.—PHOTOCOPYING MACHINE. DEC. 30, 1980.

Class 6A 1

3,301,551.—SHEET FEED MECHANISM. JAN. 31, 1967. CAN. 0811029, JAP. 0639312.
3,378,254.—PACK ADVANCER. APR. 16, 1968. CAN. 0815409, GER. 1289850, GRB. 1129872, JAP. 0615872.
3,402,928.—SHEET HANDLING APPARATUS. SEPT. 24, 1968. CAN. 0871575, GRB. 1203615, JAP. 0602168.
3,558,127.—SHEET HANDLING APPARATUS. JAN. 26, 1971. ARG. 0180315, AUS. 0443480, BEL. 0741889, CAN. 0928826, FRA. 6939710, GRB. 1282910, ITL. 0878226, JAP. 0791733, MEX. 0112773, SPN. 0373541, SWD. 6915742.
3,630,517.—COUNTER STACKER. DEC. 28, 1971.
3,768,806.—BI-DIRECTIONALLY MOVABLE PLATFORM CONTROL. OCT. 30, 1973. CAN. 0992113, GRB. 1403040.
3,820,777.—ELEVATOR ASSEMBLY POSITIONING CONTROL. JUNE 28, 1974. BEL. 0802196, CAN. 0999334, GRB. 1416470.
3,898,425.—FUSING APPARATUS. AUG. 5, 1975.
4,004,127.—IMPROVED ON LINE FUSING SYSTEM. JAN. 18, 1977.
4,033,578.—STACK ELEVATING APPARATUS. MAY 7, 1977.
4,147,342.—VIBRATING TAMPER. APR. 3, 1979.

Class 6B

3,847,388.—SHEET STACKING METHOD AND APPARATUS. NOV. 12, 1974. CAN. 0996145, FRA. 7344220, GRB. 1440489, MEX. 0134934.
3,958,989.—TRANSPARENCY SUPPORT MATERIAL FOR ELECTROPHOTOGRAPHIC PROCESS. MAY 25, 1976. BEL. 0815634, CAN. 1006012.
4,043,549.—IMPACT FEEDER. AUG. 23, 1977.
4,051,285.—TEARABLE EDGE STRIP FOR PLASTIC SHEET. SEPT. 27, 1977. BEL. 815634, CAN. 1006012, FRA. 7419536, ITL. 1014700.

Class 6B 1

3,241,830.—SHEET FEED MECHANISM. MAR. 22, 1966. ATR. 0276087, AUS. 0295720, CAN. 0765301, DNK. 0126493, EIR. 0028650, GER. 1197326, GRB. 1089538, ISR. 0030228, NZL. 0148732, STZ. 0457511.
3,251,594.—SHEET FEED MECHANISM. MAY 17, 1966. AUS. 0416589, CAN. 0785164, DNK. 131.557, EIR. 0029758, GRB. 1122623, ISR. 0034134, JAP. 0499006, NOR. 0125806, SWD. 0358480.
3,276,770.—SHEET FEEDING APPARATUS. OCT. 4, 1966. CAN. 0788346, FRA. 1459041, GER. 1237587, GRB. 1055215, ITL. 0726800, JAP. 0537118.
3,288,460.—PAPER FEED MECHANISM. NOV. 29, 1966. ATR. 0300566, CAN. 0792617, GRB. 1135746, JAP. 0630911, STZ. 0509924.
3,288,461.—SHEET FEEDING APPARATUS. NOV. 29, 1966. CAN. 0856098, GER. 1249887, GRB. 1123260, JAP. 0562385.
3,300,206.—ELECTRICALLY ENERGIZED CLUTCH FOR SHEET FEED CONTROL MECHANISM. JAN. 24, 1967. CAN. 0788344, GRB. 1135745, MEX. 0112221, STZ. 0513063.
3,406,960.—PAPER HANDLING APPARATUS. OCT. 22, 1968. CAN. 0907683, GRB. 1202218.
3,425,685.—PAPER FEED MECHANISM. FEB. 4, 1969. BEL. 0708498, CAN. 0847744, FRA. 1552327, GRB. 1165279, ITL. 0819625, JAP. 0972609, MEX. 0105134.
3,469,834.—SHEET FEEDER AND SEPARATOR APPARATUS. SEPT. 30, 1969. ARG. 0168907, CAN. 0847743, CHL. 0023614, CLB. 0017683, JAM. 0001852, MEX. 0102646, PRU. 0009339, URG. 0008981, VZL. 0023673.
3,524,639.—AUTOMATIC FEEDING DEVICE. AUG. 18, 1970. CAN. 0895184, FRA. 6906418, GRB. 1254784, ITL. 0875431, JAP. 0713806.
3,537,703.—MANIFOLD SHEET SEPARATING DEVICE. NOV. 3, 1970. CAN. 0923351, GRB. 1261077.
3,556,516.—SELF-ALIGNING FEED ROLLER. JAN. 19, 1971. CAN. 0899392, ORB. 1256265.
3,565,421.—FEEDING SYSTEM. FEB. 23, 1971.
3,567,214.—SHEET FEEDING AND SEPARATING APPARATUS. MAR. 2, 1971. BEL. 0734128, CAN. 0902124, FRA. 6919122, GER. 1929105, GRB. 1263193, HOL. 0144551, ITL. 0866188, SPN. 0368173, STZ. 0501501, SWD. 6908176.
3,578,317.—SHEET CONVEYOR APPARATUS FOR AUTOMATIC COPYING MACHINE. MAY 11, 1971. ARG. 0193800, ATR. 0307233, AUS. 0446229, BEL. 0750390, CAN. 0907682, EGR. 0082423, FRA. 7017317, GRB. 1284832, ITL. 0893096, JAP. 783766, MEX. 0117916, NZL. 0160102, SPN. 0379652, STZ. 0516404, SWD. 0361952, TIW. 0006833, VZL. 0025781.
3,580,565.—SHEET FEEDING APPARATUS. MAY 25, 1971.
3,592,462.—GATED PAPER SNUBBER. JULY 13, 1971. CAN. 0923922.
3,601,389.—SHEET FEEDING APPARATUS. AUG. 24, 1971. ARG. 0184657, BEL. 0752939, CAN. 0912055, CHL. 0026164, FRA. 7024666, GRB. 1306595, GUA. 0002508, ITL. 0907152, MEX. 0114977, PNM. 0002212, TIW. 0006720, VZL. 0032784.
3,618,752.—STACK OF IMAGE RECEIVING MEMBERS. NOV. 9, 1971.
3,655,183.—SHEET FEED APPARATUS. APR. 11, 1972.
3,664,663.—PAPER CASSETTE LOADING DEVICE. MAY 23, 1972. CAN. 0951342, GRB. 1351766.
3,713,645.—SHEET SEPARATING APPARATUS. JAN. 30, 1973. CAN. 0957392.
3,727,910.—SHEET SEPARATOR APPARATUS. APR. 17, 1973. CAN. 0956660, GRB. 1391198.
3,731,915.—FEED ROLL ABRASION ROLLER. MAY 8, 1973. ARG. 0194272, BEL. 0791064, CAN. 0966518, FRA. 7239549, GRB. 1389426, ITL. 0970223.
3,768,803.—SHEET FEEDER. OCT. 30, 1973. ARG. 0197314, BEL. 0795206, CAN. 0966158, FRA. 7304740, GRB. 1413541, ITL. 0978938, MEX. 0130347, SPN. 0411475, STZ. 5656860, SWD. 7301809, VZL. 0033780.
3,773,316.—SHEET FEEDER DRIVE MECHANISM. NOV. 20, 1973. CAN. 0994376, GRB. 1424580.
3,861,670.—SHEET FEEDING APPARATUS. JAN. 21, 1975. CAN. 1010080, GRB. 1435762.
3,866,901.—REVERSE BUCKLE FEEDER. FEB. 18, 1975. CAN. 1008893.
3,873,084.—PAPER FEEDER. MAR. 25, 1975.
3,893,663.—REVERSE BUCKLE SHEET FEEDING APPARATUS. JULY 8, 1975, CAN. 1005090, GRB. 1447909, MEX. 0135280.
3,895,791.—BOTTOM SHEET FEEDER USING SEPARATION BELT AND RETARD PAD. JULY 22, 1975, CAN. 1007255, GRB. 1443089.
3,934,869.—SHEET SEPARATING AND FEEDING APPARATUS. JAN. 27, 1976. GER. 7439833.
3,936,046.—FRONT AND SIDE SHEET REGISTERING APPARATUS. FEB. 3, 1976.
3,941,373.—FLOATING GATE SHEET SEPARATOR. MAR. 2, 1976.
3,947,018.—UNIVERSAL FEEDER-STACKER. MAR. 30, 1976. BEL. 0836262.
3,949,979.—SINGLE LONGITUDINAL MODE GAAS/GAALAS DOUBLE HETEROSTRUCTURE LASER. APR. 13, 1976.
3,966,189.—TOGGLING RETARD PAD. JUNE 29, 1976.
3,995,952.—SHEET FEEDING APPARATUS. DEC. 7, 1976.
4,023,792.—SHEET FEEDING APPARATUS. MAY 17, 1977. ARG. 0195877, AUS. 0462397, BEL. 0792370, CAN. 0978556, FRA. 7239132, GRB. 1410799, ITL. 0990513, MEX. 0128127, SPN. 0437744, STZ. 0546689.
4,030,725.—PAPER TRAY FOR COPYING MACHINES. JUNE 21, 1977.
4,043,549.—IMPACT FEEDER. AUG. 23, 1977.
4,053,152.—SHEET FEEDING DEVICE. OCT. 11, 1977.
4,058,305.—PAPER FEEDING DEVICE. NOV. 15, 1977.
4,166,614.—JOGGING AND NORMAL FORCE FOR SHEET FEEDING. SEPT. 4, 1979. BEL. 869792.
4,189,138.—PAPER FEEDER. FEB. 19, 1980. CAN. 1077980.
4,192,497.—COMPOSITION FOR THE SURFACE OF SHEET SEPARATING DEVICE. MAR. 11, 1980. CAN. 1043828, GRB. 1511502.
4,269,404.—SINGLE SHEET FRICTION FEEDER. MAY 26, 1981.

Class 6B 1A

4,270,746.—SHEET SEPARATOR. JUNE 2, 1981.

Class 6B 2

3,378,255.—PAPER HANDLING APPARATUS. APR. 16, 1968. CAN. 0836939, FRA. 1527333, GRB. 1181271, ITL. 0804517, JAP. 1052342, MEX. 0099951.
3,547,431.—PNEUMATIC CUT SHEET FEEDER. DEC. 15, 1970.
4,043,549.—IMPACT FEEDER. AUG. 23, 1977.
4,269,406.—DOCUMENT HANDLER. MAY 26, 1981.
4,275,877.—INTERRUPTED JET AIR KNIFE FOR SHEET SEPARATOR. JUNE 30, 1981.

Class 6B 10A

4,270,746.—SHEET SEPARATOR. JUN. 2, 1981.

Class 6C

3,519,124.—ARTICLE TO FACILITATE FEEDING OF IMAGE RECEIVING SHEETS. JULY 7, 1970. CAN. 0941879, FRA. 1568821, GRB. 1216347, ITL. 0870563.
3,589,809.—FEEDING SYSTEM. JUNE 29, 1971.
3,630,514.—SHEET FEEDING APPARATUS. DEC. 28, 1971. ARG. 0186214, AUS. 0452075, BEL. 0751309, CAN. 0921948, EGR. 0090063, FRA. 7019460, GRB. 1253503, ITL. 0893690, JAP. 783764, MEX. 0117507, SPN. 0380270, STZ. 0511759, SWD. 0363621, TIW. 0006836, USR. 0466680.
3,645,615.—COPYING APPARATUS. FEB. 29, 1972. ARG. 0185529, AUS. 0445849, BEL. 0752941, CAN. 0925927, CHL. 0025888, FRA. 7024670, GRB. 1312305, GUA. 0002324, ITL. 0900200, MEX. 0115165, PNM. 0002260, SPN. 0381387, STZ. 0525778, SWD. 7009063, TIW. 0007163, USR. 0535033, VZL. 0032783.
3,902,421.—METHOD FOR FORMING A PICTURE IMAGE. SEPT. 2, 1975.
4,190,354.—COPIER JOB RECOVERY SYSTEM. FEB. 26, 1980.

Class 6D

3,179,407.—SHEET FEED GUIDE. APR. 20, 1965. CAN. 0719606, FRA. 1355071, GER. 1179562, GRB. 1023036, ITL. 0688495, JAP. 0457850.
3,190,643.—SHEET GUIDING APPARATUS. JUNE 22, 1965.
3,199,866.—SHEET FEED MECHANISM. AUG. 10, 1965. CAN. 0742591, GRB. 1043646.
3,206,193.—XEROGRAPHIC REPRODUCING MACHINE CONTROL. SEPT. 14, 1965.
3,239,215.—DOCUMENT FEED MECHANISM. MAR. 8, 1966. CAN. 0741548, GRB. 1052820, JAP. 0497188.
3,239,220.—DOCUMENT CONVEYOR. MAR. 8, 1966. CAN. 0770495, FRA. 1434188, GRB. 1094188, ITL. 0742434.
3,245,311.—DOCUMENT CONVEYOR. APR. 12, 1966.
3,256,009.—SHEET REGISTRATION DEVICE. JUNE 14, 1966. CAN. 0777667.
3,281,144.—SHEET REGISTRATION DEVICE. OCT. 25, 1966. ARG. 0152212, AUS. 0423243, CAN. 0803888, DNK. 0122597, EIR. 0029757, GRB. 1122621, ISR. 0034133, JAP. 0512650, MEX. 0078899, NOR. 0126565, SWD. 0358034.
3,357,347.—PAPER FEEDING AND BREAKING MEANS FOR ELECTROGRAPHIC DEVICE. DEC. 12, 1967. CAN. 0863520, GRB. 1182684, JAP. 0582500.
3,374,732.—SELF-ALIGNING COPY DRUM STRIPOUT MECHANISM FOR REPRODUCTION MACH. MAR. 26, 1968.
3,375,781.—REGISTRATION MECHANISM FOR A REPRODUCTION MACHINE. APR. 2, 1968.
3,389,907.—DOCUMENT HANDLING APPARATUS. JUNE 25, 1968.
3,411,771.—SHEET TRANSPORT. NOV. 19, 1968. ARG. 0177552, ATR. 0284168, AUS. 0455833, CAN. 0869421, CHL. 0023101, CLB. 0016775, DNK. 0126100, EIR. 0031308, FIN. 0047867, GRB. 1193515, IND. 0112002, ISR. 0028520, JAP. 0604153, MEX. 0099909, NOR. 0127531, NZL. 0149790, PAK. 0119259, PLP. 0005199, PRU. 0009331, SAF. 0674988, SPN. 0344351, STZ. 0478048, SWD. 0343829, TRK. 0015345, URG. 0008858, VZL. 0026277.
3,422,756.—PAPER SUPPORT AND REGISTRATION MEANS FOR REPRODUCTION MACHINE. JAN. 21, 1969.
3,434,710.—SHEET HANDLING APPARATUS. MAR. 25, 1969. ARG. 0166613, CAN. 0830328, CHL. 0023568, CLB. 0017530, DNK. 0120163, GRB. 1206965, MEX. 0100814, PRU. 0009338, SPN. 0360895, STZ. 0502942. URG. 0008977, USR. 0433696, VZL. 0023674.
3,502,325.—CARD HANDLING APPARATUS. MAR. 24, 1970. ARG. 0168398, CAN. 0850515, CHL. 0024133, JAM. 0001890, MEX. 0105082, PRU. 0009337, URG. 0009016, VZL. 0027509.
3,509,780.—DOUBLE-ACTION ROTARY SOLENOID DRIVE MECHANISM. MAY 5, 1970.
3,517,923.—SHEET REGISTRATION APPARATUS. JUNE 30, 1970.
3,518,739.—TRACKING ROLLER. JULY 7, 1970. ARG. 0177437, AUS. 0437287, BEL. 0733662, BRA. 6908481, CAN. 0884215, FRA. 6917189, GRB. 1206750, ITL. 0863847, JAP. 0677424, MEX. 0111433, SPN. 0367807, SWD. 0356022, VZL. 0025065.
3,521,060.—METHOD FOR DETECTING MISROUTING OF TRANSPARENCIES DURING PROCESS OF IMAGING THEREON. JULY 21, 1970.
3,531,109.—SHEET MATERIAL TRANSPORT SYSTEM. SEPT. 29, 1970. ARG. 0177190, ATR. 0288161, AUS. 0446394, BEL. 0733197, CAN. 0899923, DNK. 0122717, FRA. 6916409, GER. 1925039, GRB. 1269100, ITL. 0863848, JAP. 0656986, MEX. 0110288, PNM. 0001431, SAF. 0693497, SPN. 0367408, SWD. 0355870.
3,536,320.—SHEET REGISTRATION DEVICE. OCT. 27, 1970.
3,556,511.—DOCUMENT FEED APPARATUS. JAN. 19, 1971. ARG. 0185791, BEL. 0741891, CAN. 0905439, FRA. 6939711, GER. 1957780, GRB. 1279129, HOL. 0144227, ITL. 0878272, JAP. 0854601, MEX. 0112825.
3,556,512.—DOCUMENT FEED APPARATUS. JAN. 19, 1971. CAN. 0905438, SWD. 6915838.
3,556,513.—DOCUMENT FEED APPARATUS. JAN. 19, 1971. CAN. 0905437.
3,601,392.—SHEET REGISTERING APPARATUS. AUG. 24, 1971. ARG. 0190238, AUS. 0446147, BEL. 0752933, CAN. 0923512, CHL. 0025789, EGR. 0084327, FRA. 7024672, GRB. 1262444, ITL. 0900199, JAP. 0803410, MEX. 0115310, PLD. 0002183, PNM. 0002050, SPN. 0381386, STZ. 0525780, SWD. 0356375, TIW. 0007194, USR. 0406343.
3,603,680.—ULTRASONIC PAPER DETACTION. SEPT. 7, 1971. CAN. 0915715, GRB. 1331457.
3,614,221.—IMAGING SYSTEM. OCT. 19, 1971. CAN. 0930540, GRB. 1343603, JAP. 0728865.
3,622,238.—COPIER MACHINE FEEDING MULTIPLE SIZE COPY SHEETS. NOV. 23, 1971. ARG. 0194337, AUS. 0451241, CAN. 0902127, JAP. 0512383, NZL. 0160105.
3,647,207.—SHEET FEEDING MECHANISM CENTERING DEVICE. MAR. 7, 1972. CAN. 0959934, GRB. 1351765.
3,694,712.—SPEED CONTROL APPARATUS. SEPT. 26, 1972. CAN. 0976641, GRB. 1339506.
3,796,486.—PROGRAMMING CONTROL SYSTEM FOR PRINTING MACHINE. MAR. 12, 1974.
3,804,516.—FIRE DETECTING DEVICE FOR A PHOTOGRAPHIC PRINTING MACHINE. APR. 16, 1974.
3,809,475.—COPIER FUSER PROTECTOR. MAY 7, 1974. FRA. 7343567.
3,815,380.—SHAFT COUPLING APPARATUS. JUNE 11, 1974, CAN. 0994121.
3,819,266.—COPIER JAM PROTECTION. JUNE 25, 1974, CAN. 1005510.
3,845,951.—FORAMINOUS SHEET REGISTRATION SYSTEM. NOV. 5, 1974, CAN. 0999316.
3,858,777.—PRINTING APPARATUS INCLUDING REGISTRATION CONTROL. JAN. 7, 1975.
3,861,673.—BI-DIRECTIONAL SHEET TRANSPORT. JAN. 21, 1975, CAN. 1004240.
3,876,317.—LATCH MECHANISM. APR. 8, 1975, CAN. 1005486.
3,888,579.—DIGITAL CONTROLLED DOCUMENT FEEDER. JUNE 10, 1975.
3,893,662.—SHEET FEEDING DEVICE. JULY 8, 1975.
3,902,421.—METHOD FOR FORMING A PICTURE IMAGE. SEPT. 2, 1975.
3,934,182.—SYNCHRONIZING APPARATUS. JAN. 20, 1976. CAN. 0957735, GRB. 1372568.
3,936,042.—SHEET FEEDING DEVICES. FEB. 3, 1976.
3,947,270.—REPRODUCING APPARATUS AND PROCESS FOR DUPLEX IMAGING IN A SINGLE PASS. MAR. 30, 1976.
3,948,511.—SHEET FEEDING DEVICES. APR. 6, 1976.
3,949,979.—SINGLE LONGITUDINAL MODE GAAS/GAALAS DOUBLE HETEROSTRUCTURE LASER. APR. 13, 1976
3,963,339.—SHEET FEEDING APPARATUS. JUNE 15, 1976.
3,984,098.—PNEUMATIC REGISTRATION AND CLAMPING APPARATUS. OCT. 5, 1976. BEL. 0848824.
4,003,568.—FLUID CONVEYER. JAN. 18, 1977.
4,025,187.—BUCKLE CONTROL SYSTEM. MAY 24, 1977.
4,036,421.—WEIGHTED PINCH ROLLS. JULY 19, 1977.
4,055,340.—ASSISTED PNEUMATIC TRANSPORT AND REGISTRATION APPARATUS. OCT. 25, 1977. BEL. 848823.
4,073,001.—APPARATUS FOR NEUTRALIZING AND REGISTERING AN ELECTROSTATICALLY CHARGED SHEET. FEB. 7, 1978.
4,077,519.—CURL DETECTOR AND SEPARATOR. MAR. 7, 1978.
4,090,704.—REGISTRATION STATION. MAY 23, 1978.
4,092,021.—UNFUSED IMAGE TRANSPORT. MAY 30, 1978.
4,128,327.—TRANSFER MATERIAL FEED APPARATUS FOR ELECTROPHOTOGRAPHIC COPYING MACHINES. DEC. 5, 1978.
4,134,671.—INTERSECTING OPTICAL AND COPY SHEET PATH METHOD AND APPARATUS. JAN. 16, 1979.
4,135,804.—REGISTRATION SYSTEM FOR A REPRODUCING DEVICE. JAN. 23, 1979.
4,238,066.—SHEET HANDLING APPARATUS AND METHOD. DEC. 9, 1980. GRB. 0001595609

4,248,413.—SHEET STACKING APPARATUS. FEB. 3, 1981.

Class 6D 1

RE.29,124.—SHEET TRANSPORT SYSTEM. JAN. 25, 1977. CAN. 1001104.
3,148,878.—SHEET FEED MECHANISM. SEPT. 15, 1964. CAN. 0715431, GER. 1222083, GRB. 1020933, JAP. 0481251.
3,240,486.—PAPER TRANSPORT MECHANISM. MAR. 15, 1966. CAN. 0766647.
3,275,318.—SHEET CONVEYING APPARATUS. SEPT. 27, 1966. MEX. 0085657.
3,408,633.—HIGH SPEED PRINTER SYSTEM. OCT. 29, 1968.
3,482,676.—DOCUMENT FEED BELT. DEC. 9, 1969. CAN. 0890297, GRB. 1253415.
3,642,362.—APPARATUS FOR CONVEYING SHEET MATERIAL. FEB. 15, 1972. GRB. 1307117.
3,719,951.—WRAP ADJUST DEVICE FOR CONTROLLING ENGAGEMENT BETWEEN A WEB AND ROLLER IN AN IMAGING SYSTEM. MAR. 6, 1973. CAN. 0995295, GRB. 1406047.
3,743,403.—TRANSPORT ASSEMBLY. JULY 3, 1973. CAN. 0983305, GRB. 1417018.
3,781,004.—CONVEYING SYSTEM FOR ELECTROSTATIC PRINTING MACHINES. DEC. 25, 1973. CAN. 1007287.
3,790,270.—REGISTRATION RESET SYSTEM. FEB. 5, 1974. GRB. 1439772, ITL. 0993064, SPN. 0418253.
3,804,507.—PROCESSING CONTROL DEVICE FOR PRINTING MACHINES. APR. 16, 1974.
3,808,658.—SNAP ROLLER. MAY 7, 1974. CAN. 1000637.
3,826,568.—SHEET TRANSPORT SYSTEM. JULY 30, 1974, CAN. 1001104.
3,832,053.—BELT TRANSFER SYSTEM. AUG. 27, 1974.
3,846,020.—ELECTROSTATIC SHEET TRANSPORT SYSTEM. NOV. 5, 1974.
3,854,566.—PHOTOELECTRIC TABULATING APPARATUS. DEC. 17, 1974. BEL. 0815420, CAN. 0982969, GRB. 1442450, ITL. 1012805, SWD. 7406400.
3,902,715.—SHEET REGISTRATION FOR PAPER HANDLING APPARATUS. SEPT. 2, 1975. CAN. 1003867, ITL. 0993066, SPN. 0418255.
3,918,705.—PROCESSING CONTROL DEVICE FOR PRINTING MACHINES. NOV. 11, 1975.
3,930,725.—MULTIPLE SHEET FEEDING SYSTEM FOR ELECTROSTATOGRAPHIC PRINTING MACHINES. JAN. 6, 1976. GRB. 1436457.
14,085,673.—SHEET FEEDING APPARATUS. APR. 25, 1978.
4,192,497.—COMPOSITION FOR THE SURFACE OF SHEET SEPARATING DEVICE. MAR. 11, 1980. CAN. 1043828, GRB. 1511502.

Class 6D 1E

4,171,131.—PNEUMATIC REGISTRATION APPARATUS. OCT. 16, 1979. CAN. 1059167, SAF. 6400, SPN. 452882.

Class 6D 2

3,337,015.—LATCH OPERATED AND ONE WAY COIL CLUTCHES. AUG. 22, 1967. CAN. 0810494, JAP. 0914622.
3,840,100.—UNIDIRECTIONAL COUPLING APPARATUS. OCT. 8, 1974. CAN. 1006706.

Class 6E

RE29124.—SHEET TRANSPORT SYSTEM. JAN. 25, 1977. CAN. 1001104.
3,348,288.—DRUM CLAMP. OCT. 24, 1967. CAN. 0838542, GRB. 1123459.
3,357,325.—XEROGRAPHIC TRANSFER APPARATUS. DEC. 12, 1967. CAN. 0812525.
3,375,782.—PROGRAMMING MECHANISM FOR A REPRODUCTION MACHINE. APR. 2, 1968.
3,567,213.—CONTROL APPARATUS FOR REGISTER STOPS AND GRIPPER FINGERS. MAR. 2, 1971.
3,685,898.—PAPER FLIP CONTROL APPARATUS. AUG. 22, 1972.
3,717,801.—METHODS AND APPARATUS FOR ELCLRSTCLY PRFMNG A TCKING OPERATION. FEB. 20, 1973.
3,826,568.—SHEET TRANSPORT SYSTEM. JULY 30, 1974. CAN. 1001104.
3,841,751.—ELECTROSTATIC COLOR REPRODUCTION METHOD. OCT. 15, 1974. CAN. 0946463.
3,845,951.—FORAMINOUS SHEET REGISTRATION SYSTEM. NOV. 5, 1974. CAN. 0999316.
3,976,370.—BELT TRANSFER AND FUSING SYSTEM. AUG. 24, 1976.
3,993,124.—METH&APPRTS FOR SUSR ASSMBLY CLING IN ELCTROSTATOGRPC MACHNE-GAMMA METH&APPRTS FOR FUSER END CO. NOV. 23, 1976. BEL. 0793560, FRA. 7246728, ITL. 0973322, SWD. 7216976.
3,995,951.—SHEET FEEDING APPARATUS & REPRODUCING MACHINE. DEC. 7, 1976.
4,063,946.—ELECTROPHOTOGRAPHIC COLOR REPRODUCTION PROCESS EMPLOYING PHOTOCONDUCTIVE MATERIAL WITH DUAL. DEC. 20, 1977.
4,078,862.—APPARATUS FOR PRODUCING A COMPOSITE COPY OF AN ORIGINAL DOCUMENT ON SELECTIVELY POSITIONED. MAR. 14, 1978.
4,082,137.—METHOD AND APPARATUS FOR FUSER ASSEMBLY COOLING AN ELECTROSTATOGRAPHIC MACHINE. APR. 4, 1978. BEL. 793560, CAN. 1025515, FRA. 7246728, GRB. 1418306, ITL. 973322, SWD. 7216976.
4,085,794.—METHOD AND APPARATUS FOR FUSER ASSEMBLY COOLING IN AN ELECTROSTATOGRAPHIC MACHINE. APR. 25, 1978. BEL. 793560, CAN. 1025515, FRA. 7246728, GRB. 1418306, ITL. 973322, SWD. 7216976.
4,138,102.—AUTOMATIC DOCUMENT PROCESSING DEVICE. FEB. 6, 1979.

Class 6F

3,249,354.—MULTIPLE SHEET DETECTING DEVICE. MAY 3, 1966. CAN. 0770494.
3,281,145.—PAPER REJECT MECHANISM. OCT. 25, 1966. CAN. 0770493.
3,288,462.—APPARATUS FOR HANDLING SUPERPOSED SHEETS. NOV. 29, 1966. AUS. 0422882, CAN. 0786210, EIR. 0029759, GRB. 1122625, ISR. 0034135, JAP. 0894757, NOR. 0124531.
3,301,975.—SENSING DEVICE FOR DETECTING A SHEET ON A TRANSPORT OR DRUM. JAN. 31, 1967. CAN. 0800094, FRA. 1487581, GER. 1522699, GRB. 1077117, ITL. 0774188, JAP. 0923304.
3,360,652.—FAIL SAFE PHOTOELECTRIC SHEET SENSING MACHINE CONTROL CIRCUIT. DEC. 26, 1967. CAN. 0775268, FRA. 1455478, GER. 1522805, GRB. 1121099, ITL. 0732531, JAP. 0503244, MEX. 0078869.
3,396,965.—SENSOR GAUGE. AUG. 13, 1968. CAN. 0822218, GRB. 1152538, JAP. 0587326.
3,504,911.—VACUUM POWERED MULTIPLE DOCUMENT DETECTOR. APR. 7, 1970. CAN. 0861362, FRA. 1589986, GER. 1804476, GRB. 1241968, ITL. 0845395, JAP. 0656984.
3,593,065.—SHEET DETECTION APPARATUS. JULY 13, 1971. CAN. 0923544, CZC. 0151559, EGR. 0100567, GRB. 1322794, JAP. 1162030, USR. 0365085.
3,614,419.—MULTIPLE SHEET DETECTION SYSTEM. OCT. 19, 1971. ARG. 0186441, BEL. 0765366, CAN. 0930052, FRA. 7113404, GRB. 1342656, ITL. 0922694, MEX. 0119754, VZL. 0021933.
3,627,311.—SHEET SENSOR. DEC. 14, 1971. CAN. 0871371, GRB. 1322258.
3,628,785.—GRIP FORCE DETECTION APPARATUS. DEC. 21, 1971. ARG. 0185946, AUS. 0455882, BEL. 0760750, CAN. 0923158, FRA. 7047695, GRB. 1340206, ITL. 0913997, MEX. 0117505, STZ. 0518227, SWD. 7017384, VZL. 0032788.
3,650,616.—MISPUFF DETECTOR. MAR. 21, 1972. BEL. 0778739, CAN. 0954181, FRA. 7203548, GRB. 1374923, ITL. 0947120.
3,650,617.—SWITCHING DETECTOR—A. MAR. 21, 1972.
3,650,618.—SWITCHING DETECTOR—B. MAR. 21, 1972.
3,650,619.—SWITCHING DETECTOR—C. MAR. 21, 1972.
3,684,890.—PHOTOSENSITIVE MISFEED DETECTOR. AUG. 15, 1972. CAN. 0929631, GRB. 1335444.
3,778,051.—SUPERPOSED SHEET DETECTOR. DEC. 11, 1973. CAN. 0975067.
3,791,729.—APPARATUS FOR MONITORING A SHEET TRANSPORT MECHANISM. FEB. 12, 1974. CAN. 0991244, GRB. 1413069.
3,882,308.—DETECTION SYSTEM FOR SUPERPOSED SHEETS. MAY 6, 1975. CAN. 0929632, GRB. 1342838.
3,932,755.—DEVICE FOR DETECTING DOUBLE SHEET FEEDING. JAN. 13, 1976.
3,948,508.—SHEET DETECTING APPARATUS. APR. 6, 1976.
4,025,187.—BUCKLE CONTROL SYSTEM. MAY 24, 1977.
4,077,519.—CURL DETECTOR AND SEPARATOR. MAR. 7, 1978.
4,203,586.—MULTIFEED DETECTOR. MAY 20, 1980.
4,231,567.—METHOD AND APPARATUS FOR CLEARING JAMS IN COPIERS. NOV. 4, 1980.

Class 6G

3,260,455.—STEPPED COUNTING APPARATUS. JULY 12, 1966. ARG. 0157223, BRA. 0083779, CAN. 0760825, FRA. 1459930, GER. 1513422, GRB. 1113420, ITL. 0729650, MEX. 0094217.
3,301,126.—REPRODUCING APPARATUS. JAN. 31, 1967. CAN. 0777413, EIR. 0029760, GRB. 1122626, ISR. 0034136, JAP. 0669365, NOR. 0128732.
3,358,570.—COPY COUNTING SYSTEM. DEC. 19, 1967. CAN. 0842444, FRA. 1508192, GER. 1283855, GRB. 1165943, ITL. 0787991, JAP. 0572187.
3,375,780.—SHEET COUNTING MECHANISM FOR REPRODUCTION MACHINES. APR. 2, 1968.
3,375,783.—COPY INDICATING MECHANISM FOR A REPRODUCTION MACHINE. APR. 2, 1968.
3,588,472.—LOGIC CONTROL APPARATUS. JUNE 28, 1971. ARG. 0181590, ATR. 0279353, BEL. 0706629, BRA. 6793350, CAN. 0834957, FRA. 1567082, GRB. 1204719, ITL. 0815466, JAP. 0645591, LXB. 0054882, MEX. 0101675, VZL. 0023684.
3,655,281.—BILLING APPARATUS. APR. 11, 1972. BEL. 0760911, CAN. 0929013, FRA. 7047633, GRB. 1329579, ITL. 0913956, JAP. 0766713.
3,813,157.—CONTROL LOGIC FOR TROUBLE DETECTION AND RECOVERY. MAY 28, 1974. GRB. 1457781, ITL. 1009725, SPN. 0425049.
3,831,933.—TAMPER DETECTION AND RECOVERY. AUG. 27, 1974. GRB. 1457781, ITL. 1009725, SPN. 0425049.
3,909,128.—CONTROL LOGIC FOR CHARGING A MULTI-MODE COPIER DUPLICATOR FROM ONE MODE TO ANOTHER. SEPT. 30, 1975. BEL. 0819383.
3,916,171.—COUNTING CIRCUIT. OCT. 28, 1975.
3,989,368.—DUAL MODE CONTROL LOGIC FOR A MULTI-MODE COPIER DUPLICATOR. NOV. 2, 1976. BEL. 0819384.
4,019,028.—PRINTING MACHINE WITH VARIABLE COUNTER CONTROL SYSTEM. APR. 19, 1977. BEL. 0812560, GRB. 1451992, ITL. 1010688, SPN. 0424462.
4,057,341.—DUAL MODE CONTROL LOGIC FOR A MULTI-MODE COPIER/DUPLICATOR. NOV. 8, 1977. AUS. 489874, BEL. 819384, CAN. 1029431, GRB. 1470598, MEX. 137406.
4,058,815.—METERING SYSTEM FOR A COPIER/DUPLICATOR MACHINE. NOV. 15, 1977. BEL. 824682, FRA. 7501637, GRB. 1451991.
4,173,408.—DEMAND PUBLISHING ROYALTY ACCOUNTING SYSTEM FOR AN ELECTROSTATIC COPIER. NOV. 6, 1979.
4,179,212.—DEMAND PUBLISHING ROYALTY ACCOUNTING SYSTEM. DEC. 18, 1979.
4,210,319.—COPY SET COUNTER DUPLEX TRAY. JULY 1, 1980.

Class 6H

3,339,069.—CORONA CHARGING DEVICE W/MEANS TO PREVENT TONER DUST CONTAMINATION. AUG. 29, 1967. CAN. 0788539, FRA. 1450010, GRB. 1116687, ITL. 0730715, JAP. 0875339, MEX. 0089459.
3,357,400.—ELECTROSTATIC APPARATUS FOR PAPER DETACKING. DEC. 12, 1967. CAN. 0841229, MEX. 0100315.
3,450,402.—SHEET STRIPPER APPARATUS. JUNE 17, 1969.
3,506,259.—ELECTROSTATIC SHEET DETACKING APPARATUS. APR. 14, 1970. ARG. 0177881, AUS. 0418161, BEL. 0721966, CAN. 0848612, FRA. 1585343, GRB. 1230113, ITL. 0895052, MEX. 0104231.
3,578,859.—MECHANICAL STRIPPING APPARATUS. MAY 18, 1971. ARG. 0185526, AUS. 0445289, BEL. 0752938, CAN. 0922771, CHL. 0025913, EGR. 0085002, FRA. 7024669, GRB. 1296763, GUA. 0002611, ITL. 0900197, MEX. 0117139, PLD. 0081340, PNM. 0002049, SPN. 0381384, STZ. 0523150, SWD. 0366849, TIW. 0007785, USR. 0443525, VZL. 0032781.
3,620,615.—SHEET STRIPPING APPARATUS. NOV. 16, 1971. CAN. 0927472, GRB. 1290518.
3,704,881.—TRANSFER SHEET PEELING DEVICE FOR XEROGRAPHIC APPARATUS. DEC. 5, 1972.
3,774,907.—VACUUM SHEET STRIPPING APPARATUS. NOV. 27, 1973. CAN. 0966519.
3,804,401.—PNEUMATIC STRIPPING APPARATUS. APR. 16, 1974. CAN. 0998705.
3,811,670.—ELECTROSTATOGRAPHIC APPARATUS WITH AIR BAFFLE. MAY 21, 1974.
3,819,175.—VACUUM STRIPPING ROLL WITH STATIONARY PICKUP SLOTS. JUNE 25, 1974.
3,820,778.—VACUUM STRIPPING ROLL WITH ROTARY PICKUP SLOTS. JUNE 28, 1974. CAN. 1010081, GRB. 1430856.
3,826,568.—SHEET TRANSPORT SYSTEM. JULY 30, 1974. CAN. 1001104.
3,837,640.—STRIPPER FINGER WITH AIR CUSHION. SEPT. 24, 1974. CAN. 1002077, FRA. 7338663, GRB. 1427058, ITL. 998964.
3,857,560.—ADHESIVE PAPER PICK-OFF SYSTEM. DEC. 31, 1974.
3,885,785.—VACUUM TRANSPORT. MAY 27, 1975. CAN. 1008892, FRA. 7437717.
3,885,786.—STRIPPER FINGER. MAY 27, 1975. GRB. 1402956.
3,891,206.—SHEET STRIPPING APPARATUS. JUNE 24, 1975. CAN. 1003868, GRB. 1449754.
3,895,793.—VACUUM SHEET STRIPPER. JULY 22, 1975. CAN. 1014179.
3,907,280.—FLEXIBLE SHEET HANDING DEVICE. SEPT. 23, 1975. FRA. 7322885.
3,940,126.—SHEET HANDLING MECHANISM. FEB. 24, 1976. GRB. 1450219.
3,948,507.—COPYING STRIPPER. APR. 6, 1976.
3,970,381.—METHOD AND APPARATUS FOR XEROGRAPHIC REPRODUCTION. JULY 20, 1976. BEL. 0811188, FRA. 7406478, GRB. 1451288, ITL. 1008269, SPN. 0423529, STZ. 5672880.
3,991,999.—REVOLVING STRIPPER FINGER. NOV. 16, 1976.
3,992,000.—SHEET STRIPPER. NOV. 16, 1976.
3,998,536.—METHOD & APPARATUS FOR ELECTROSTATIC PAPER STRIPPING. DEC. 21, 1976.
4,004,802.—SHEET STRIPPING DEVICE. JAN. 25, 1977.
4,017,065.—TRANSFER FUSING SPEED COMPENSATION. APR. 12, 1977.
4,017,067.—TRANSFER-FUSING SPEED COMPENSATION. APR. 12, 1977.
4,026,541.—SHEET STRIPPING DEVICE. MAY 31, 1977.
4,058,306.—DETACK AND STRIPPING SYSTEM. NOV. 15, 1977.
4,060,235.—SELF-LIFTING VACUUM STRIPPER. NOV. 29, 1977.
4,072,307.—CORNER SHEET STRIPPER. FEB. 7, 1978.
4,073,585.—SHEET REMOVING DEVICE FOR USE IN ELECTROPHOTOGRAPHIC COPYING MACHINE. FEB. 14, 1978.
4,092,021.—UNFUSED IMAGE TRANSPORT. MAY 30, 1978.
4,119,307.—SHEET STRIPPING APPARATUS. OCT. 10, 1978.
4,119,308.—SHEET STRIPPING APPARATUS. OCT. 10, 1978.
4,219,270.—REPRODUCING APPARATUS. AUG. 26, 1980.

Class 6I

RE.27,720.—SIGNAL STORAGE DEVICE - RE OF 3,416,861-D1593. AUG. 7, 1973.
3,075,493.—XEROGRAPHIC APPARATUS WITH WEB CUTTING MEANS. JAN. 29, 1963. CAN. 0682231, FRA. 1280975, GER. 1177487, GRB. 0979161, JAP. 0502929.
3,105,425.—WEB MARKING AND CUTTING APPARATUS FOR XEROGRAPHIC REPRODUCING DEVICES. OCT. 1, 1963. CAN. 0701949.
3,135,179.—XEROGRAPHIC APPARATUS. JUNE 2, 1964.
3,135,180.—XEROGRAPHIC APPARATUS. JUNE 2, 1964.
3,244,084.—WEB MARKING DEVICE FOR XEROGRAPHIC REPRODUCING APPARATUS. APR. 5, 1966.
3,401,613.—WEB CUTTER CONTROL DEVICE FOR XEROGRAPHIC REPRODUCING APPARATUS. SEPT. 17, 1968. CAN. 0786141, GRB. 1118217, JAP. 0517506.
3,402,628.—CUTTING APPARATUS. SEPT. 24, 1968. CAN. 0847666, GRB. 1137800.
3,416,061.—SIGNAL STORAGE DEVICE—REISSUED D72104—27,720. DEC. 17, 1968. CAN. 0824770, GER. 1524998, GRB. 1184579, JAP. 0571176.
3,418,046.—SIGNAL STORAGE DEVICE. DEC. 24, 1968. CAN. 0852814, GER. 1524999, GRB. 1190084, JAP. 0589515.
3,466,959.—WEB MATERIAL HANDLING APPARATUS. SEPT. 16, 1969.
3,485,622.—PRINTING OF TIMING MARKS IN XEROGRAPHIC PROCESS. DEC. 23, 1969. FRA. 1488142, GER. 1522700, GRB. 1047451, JAP. 0608701.
3,504,586.—ROLL CONVERTER CONTROL. APR. 7, 1970.
3,506,175.—ROLL STOCK CONVERTING APPARATUS. APR. 14, 1970.
3,585,289.—FACSIMILE RECORDING APPARATUS WITH CAM OPERATED PAPER CUTTER. JUNE 15, 1971.
3,591,279.—CUT AND DEFLECT WEB DRIVE APPARATUS. JULY 6, 1971. CAN. 0924635, FRA. 7019910, GRB. 1307549, ITL. 0893691.
3,639,053.—WEB CUTTING AND FEEDING APPARATUS. FEB. 1, 1972. ARG. 0192554, AUS. 0461657, BEL. 0749786, CAN. 0917974, FRA. 7015812, GRB. 1314727, ITL. 0900026, MEX. 0116866, SAF. 0703019, SPN. 0379248, STZ. 0516181, SWD. 7006081.

3,728,920.—CUT AND DEFLECT WEB DRIVE APPARATUS. APR. 24, 1973.
3,743,409.—CUTTER ASSEMBLY. JULY 3, 1973. BEL. 0784635, CAN. 0974447, FRA. 7220418, GRB. 1400465, ITL. 0956414.
3,855,890.—SLITTER/PERFORATOR APPARATUS. DEC. 24, 1974. BEL. 808873, CAN. 0996462, FRA. 7345296, GRB. 1423770, ITL. 1001152, USR. 0546267.
3,882,744.—ELECTROSTATOGRAPHIC WEB FEEDING APPARATUS. MAY 13, 1975. FRA. 7417339.
3,931,090.—RUBBER COMPOSITIONS FOR FLEXIBLE BELTS. JAN. 6, 1976.
4,043,233.—METHOD OF PREVENTING MULTI-SHEET FEEDING. AUG. 23, 1977.

Class 6J

3,380,733.—SHEET STRIPPING APPARATUS. APR. 30, 1968. ATR. 0268045, AUS. 0413138, BEL. 0689067, CAN. 0819593, DNK. 0112289, FRA. 1499560, GER. 1522704, GRB.. 1157342, HOL. 0151191, ITL. 0788572, JAP. 0560087, LXB. 0052213, MEX. 0101989, NOR. 0122220, NZL. 0146848, PTG. 0046633, SAF. 0666572, SPN. 0332819, STZ. 0468661, SWD. 0326103, USR. 0261292.
3,416,791.—DOCUMENT INVERTING APPARATUS. DEC. 17, 1968. CAN. 0853562, GRB. 1210564, JAP. 0648074.
3,548,783.—PAPER TRANSPORT - SHEET TURNER - PAPER TRANSPORT-90 DEG TURN. DEC. 22, 1970.
3,627,312.—RESTACKING APPARATUS. DEC. 14, 1971. AUS. 0447183, BEL. 0752942, CAN. 0922747, CHL. 0025830, EGR. 0084128, FRA. 7024663, GRB. 1312303, GUA. 0002616, ITL. 0900193, JAP. 791920, MEX. 0114980, PLD. 0081346, PNM. 0001953, SPN. 0381379, STZ. 0525779, SWD. 0359381, TIW. 0022313, VZL. 0032782.
3,856,295.—INVERTER-REVERSER FOR A REPRODUCTION MACHINE. DEC. 24, 1974.
3,862,802.—SHEET REVERSING APPARATUS AND A DUPLEX REPRODUCING APPARATUS EMPLOYING SAME. JAN. 28, 1975. BEL. 0818894.
3,942,785.—SELF-ACTUATING SHEET INVERTER-REVERSER. MAR. 9, 1976.
3,944,212.—SHEET REVERSING MECHANISM. MAR. 16, 1976.
3,947,270.—REPRODUCING APPARATUS AND PROCESS FOR DUPLEX IMAGING IN A SINGLE PASS. MAR. 30, 1976.
4,040,616.—SHEET TURN AROUND INVERTER. AUG. 9, 1977. FRA. 7701111.
7,214,740.—SHEET REVERSING MECHANISM. JULY 29, 1980.

Class 6K

D.227,933.—SORTER. JULY 24, 1973.
D.230,515.—DOCUMENT REPRODUCING AND SORTING MACHINE. FEB. 26, 1974.
D.233,937.—SORTER. DEC. 17, 1974.
D.236,030.—PAPER TRAY. JULY 22, 1975.
3,395,913.—SHEET MATERIAL DISTRIBUTION SYSTEM. AUG. 6, 1968. AUS. 0409539, BEL. 0704922, CAN. 0832159, FRA. 1543565, GRB. 1193517, ITL. 0823413, JAP. 0645590, MEX. 0101165, USR. 0343419.
3,460,824.—MODULAR SHEET DISTRIBUTOR. AUG. 12, 1969. ARG. 0175858, ATR. 0304588, AUS. 0443802, CAN. 0871013, CHL. 0023362, CLB. 0016672, EIR. 0031307, FIN. 0047868, GRB. 1193514, IND. 0112001, ISR. 0028521, JAP. 0645589, MEX. 0099178, NOR. 0125174, NZL. 0149789, PAK. 0119258, PLP. 0006159, PRU. 0009362, SAF. 0674987, SPN. 0344350, STZ. 0478049, SWD. 0342203, TRK. 0014721, URG. 0008514, VZL. 0016672.
3,484,101.—SORTING APPARATUS FOR DOCUMENTS. DEC. 16, 1969. CAN. 0889441, GRB. 1246033.
3,552,739.—SHEET HANDLING APPARATUS. JAN. 5, 1971. BEL. 0738575, CAN. 0921945, FRA. 6930567, GRB. 1274277, ITL. 0871023.
3,565,420.—DOCUMENT FEEDING APPARATUS. FEB. 23, 1971. ARG. 0184075, AUS. 0453309, BEL. 0750391, CAN. 0922328, EGR. 0082941, FRA. 7017112, GRB. 1305825, ITL. 0893198, MEX. 0117914, PLD. 0082841, SPN. 0379694, STZ. 0513435, SWD. 0368797, USR. 0476767.
3,589,808.—REPRODUCING APPARATUS. JUNE 29, 1971. CAN. 0917482.
3,618,936.—JAM DETECTION SYSTEM FOR SORTING APPARATUS. NOV. 9, 1971. AUS. 0445492, BEL. 0758059, CAN. 0949671, EGR. 0088009, FRA. 7041622, GRB. 1324119, ITL. 0909902, PLD. 0081147, SPN. 0385034, STZ. 0525723, TIW. 0007648.
3,622,061.—STAPLE FEED AND FASTENING APPARATUS. NOV. 23, 1971.
3,630,607.—SET SEPARATION COPIER SYSTEM. DEC. 28, 1971.
3,649,006.—SHEET HANDLING APPARATUS. MAR. 14, 1972. BEL. 0762643, CAN. 0944310, FRA. 7104922, GRB. 1341286, ITL. 0918344, JAP. 0795150.
3,652,875.—CONTROL CIRCUIT FOR DRIVING STAPLING MECHANISM. MAR. 28, 1972.
3,669,447.—SHEET PROPELLING APPARATUS. JUNE 13, 1972. CAN. 0938624.
3,671,094.—COVER APPARATUS. JUNE 20, 1972.
3,682,328.—TRAY APPARATUS. AUG. 8, 1972.
3,685,712.—STAPLING APPARATUS. AUG. 22, 1972. CAN. 0953851.
3,690,537.—STAPLE FORMING AND FASTENING APPARATUS. SEPT. 12, 1972.
3,695,756.—SHEET STRIPPING APPARATUS. OCT. 3, 1972. BEL. 0774563, CAN. 0950931, FRA. 7139637, GRB. 1366909, ITL. 0937673.
3,707,418.—METHOD OF BINDING. DEC. 26, 1972. CAN. 0974723, EGR. 0094346, GRB. 1359338.
3,709,485.—CONTROL CIRCUIT FOR SORTING SYSTEM. JAN. 9, 1973.
3,709,492.—SORTING APPARATUS. JAN. 9, 1973. ARG. 0194366, AUS. 0457968, BEL. 0783854, CAN. 0968300, FRA. 7218317, GRB. 1365399, ITL. 0955692, MEX. 0127721, SPN. 0403108, STZ. 0555198.
3,719,266.—SHEET STACKING APPARATUS. MAR. 6, 1973.
3,735,978.—METHOD AND APPARATUS FOR STACKING COPY SHEETS. MAY 29, 1973. ARG. 0190825, BEL. 0772406, CAN. 0951340, FRA. 7133309, GRB. 1358420, ITL. 0936377, MEX. 0125745.
3,788,640.—MOVING BIN SORTING APPARATUS. JAN. 29, 1974. CAN. 0996495, FRA. 7346312, GRB. 1429726.
3,793,016.—ELECTROPHOTOGRAPHIC SHEET BINDING PROCESS. FEB. 19, 1974.
3,794,550.—SHEET BINDING. FEB. 26, 1974. CAN. 1012583, GRB. 1431286.
3,833,911.—REPRODUCTION SYSTEM AND METHOD WITH SIMPLEX AND DUPLEX MODES OF OPERATION. SEPT. 3, 1974.
3,841,754.—DUPLEX REPRODUCTION SYSTEM. OCT. 15, 1974.
3,841,827.—DUPLEX REPRODUCTION SYSTEM. OCT. 15, 1974. BEL. 0816155, FRA. 7419739, GER. 7409422, GRB. 1441370.
3,845,949.—SORTER CONTROL TO PREVENT OVERSTACKING IN THE SORTER TRAYS. NOV. 5, 1974. BEL. 808173, CAN. 1005511, FRA. 7342816, GRB. 1436599, ITL. 1002130, SPN. 0421148.
3,848,995.—COPIER/DUPLICATOR SYSTEM. NOV. 19, 1974. BEL. 0815548, GRB. 1450847, ITL. 1012907, SPN. 0426782.
3,861,219.—METHOD FOR MEASURING HEAT AND PRESSURE CHARACTERISTICS OF FUSING APP. JAN. 21, 1975. CAN. 1013807.
3,861,861.—FUSER ROLL CLEANING APPARATUS. JAN. 21, 1975.
3,866,904.—MULTIPLE FEED SORTING APPARATUS. FEB. 18, 1975. CAN. 1001109, GRB. 1432790.
3,868,019.—TRAY APPARATUS. FEB. 25, 1975. FRA. 7346312, CAN. 0996495, FRA. 7346912, GRB. 1429726.
3,870,295.—SORTER SUPPLEMENT CONTROL. MAR. 11, 1975. CAN. 1007283.
3,871,643.—SORTER CONTROL. MAR. 18, 1975. BEL. 808172, CAN. 1000647, GRB. 1422029, ITL. 1002129, SPN. 0421116.
3,878,818.—CLEANING APPARATUS FOR DRY FUSER ROLLS. APR. 22, 1975. FRA. 7427783, GRB. 1464759.
3,880,119.—DEVELOPMENT APPARATUS. APR. 29, 1975.
3,902,709.—BINLESS SORTER. SEPT. 2, 1975. FRA. 7436985.
3,907,276.—WOBBLE JOGGER. SEPT. 23, 1975.
3,908,978.—BINLESS SORTING APPARATUS. SEPT. 30, 1975. CAN. 0996586, GRB. 1426020.
3,917,256.—DUAL PURPOSE SHEET HANDLING APPARATUS. NOV. 4, 1975. CAN. 1014098.
3,917,257.—SHEET INVERTER APPARATUS. NOV. 4, 1975. CAN. 1005009, FRA. 7346309, GRB. 1430620.
3,938,802.—SHEET STACKING APPARATUS. FEB. 17, 1976. CAN. 1010462, GRB. 1431605.
3,941,369.—SHEET DISTRIBUTING APPARATUS. MAR. 2, 1976.
3,947,018.—UNIVERSAL FEEDER-STACKER. MAR. 30, 1976. BEL. 0836262.
3,953,023.—BIN INDICATOR DEVICE. APR. 27, 1976.
3,971,554.—SHEET STACKER. JULY 27, 1976.
3,973,769.—COMPACT SORTING APPARATUS. AUG. 10, 1976. BEL. 0836261.
3,977,667.—SORTING APPARATUS. AUG. 31, 1976.
3,988,817.—PRESSURE ROLL FOR FUSER APPARATUS. NOV. 2, 1976.
3,990,695.—SORTING APPARATUS. NOV. 9, 1976.

3,995,748.—SORTER APPARATUS. DEC. 7, 1976. BEL. 0844420.
4,011,952.—MANUAL SORTER. MAR. 15, 1977.
4,012,034.—MULTIPLE MODULAR SORTER ASSEMBLY. MAR. 15, 1977.
4,012,035.—SORTER CONTROL SYSTEM. MAR. 15, 1977.
4,015,841.—SORTER. APR. 5, 1977.
4,022,458.—SHEET DISTRIBUTION APPARATUS. MAY 10, 1977.
4,029,309.—SET TRANSPORT AND STACKER. JUNE 14, 1977. BEL. 0847844.
4,033,579.—AN OFFSET STACKER. JULY 5, 1977.
4,037,832.—IMPROVED SORTER APPARATUS. JULY 26, 1977.
4,038,594.—DISTORTIONLESS LINE WAVE AMPLIFICATION. JULY 26, 1977.
4,049,180.—STITCHING HEAD BYPASS APPARATUS. SEPT. 20, 1977.
4,055,339.—SORTER APPARATUS. OCT. 25, 1977.
4,069,728.—SHEET SLITTING APPARATUS. JAN. 24, 1978.
4,084,809.—SHEET STACKING APPARATUS. APR. 18, 1978.
4,087,087.—SHEET STACKING APPARATUS FOR SORTER. MAY 2, 1978.
4,111,410.—SORTING APPARATUS AND REPRODUCING MACHINE. SEPT. 5, 1978.
4,138,076.—STAPLE CASSETTE. FEB. 6, 1979.
4,151,944.—STAPLERS. MAY 1, 1979.
4,175,314.—PNEUMATICALLY CONTROLLED STAPLING SYSTEM. NOV. 27, 1979.
4,181,248.—FIXED STAPLER HEAD. JAN. 1, 1980.
4,184,622.—AN IMPROVED STAPLER HEAD. JAN. 22, 1980.
4,187,969.—FIXED STAPLER HEAD. FEB. 12, 1980.
4,190,247.—SHEET RECEIVING APPARATUS. FEB. 26, 1980. FRA. 7506684, GER. 2506736, GRB. 1494785.
4,194,666.—STAPLE CLINCHING MECHANISM. MAR. 25, 1980.
4,204,727.—MULTIMODE REPRODUCING APPARATUS. MAY 27, 1980.
4,214,746.—A SORTING APPARATUS. JULY 29, 1980.
4,220,325.—SORTING APPARATUS. SEPT. 2, 1980.
4,221,378.—COPY STACKING TRAY WITH RESTRAINING FINGERS. SEPT. 9, 1980.
4,221,379.—COPY STACKING TRAY. SEPT. 9, 1980.

Class 7

3,784,300.—PRE-TRANSFER STATION. JAN. 8, 1974. AUS. 0465154, BEL. 0789340, CAN. 1000782, EGR. 0106095, FRA. 7234200, GRB. 1379826, ITL. 0972691, MEX. 0128584, SPN. 0409975, STZ. 0557051, SWD. 7215168.
3,809,471.—PHOTOELECTROPHORETIC IMAGING APPARATUS WITH CORRECTION FOR PARALLAX. MAY 7, 1974.
3,819,263.—CLEANING APPARATUS. JUNE 25, 1974. ARG. 0200252, AUS. 0469469, BEL. 0796984, EGR. 0104374, FRA. 2177733, GRB. 1421929, ISR. 0041829, ITL. 0983618, MEX. 131438, SAF. 0732067, SPN. 0439774, STZ. 0556047, SWD. 7304022.

Class 7A

3,850,517.—HIGH SPEED PRINTOUT SYSTEM. NOV. 26, 1974.

Class 7A 1

3,273,999.—IMAGE DEFORMATION UTILIZING A PRISM. SEPT. 20, 1966. AUS. 0274351, CAN. 0840628, FRA. 1367772, GRB. 1034097, ITL. 0699466, SAF. 0002971, SWD. 0306232.
3,320,061.—MASKING BY TOTAL INTERNAL REFLECTION FOR IMAGE REPRODUCTION AND DISPLAY. MAY 16, 1967. CAN. 0847533, FRA. 1401615, GER. 1497081, GRB. 1065986, ITL. 0729029, JAP. 0471308.
3,481,668.—IMAGE PROJECTION APPARATUS. DEC. 2, 1969.
3,510,660.—METHOD FOR VISUAL COMPARISON OF INFORMATION. MAY 5, 1970. CAN. 0848611, GRB. 1201376, JAP. 0595641.
3,519,344.—IMAGE PROJECTION. JULY 7, 1970.
3,622,217.—LIGHT PRODUCING SYSTEM. NOV. 23, 1971.

Class 7A 2

3,196,765.—IMAGE DEVELOPMENT AND PROJECTION. JULY 27, 1965.
3,355,308.—PROJECTION TRANSPARENCY HAVING A TRANSPARENT POWDER IMGE. NOV. 28, 1967.
3,607,256.—FULLY-ENCLOSED ELECTROPHORETIC IMAGING SYSTEM. SEPT. 21, 1971.

Class 7A 2A

3,999,038.—FLARED FUSER ROLLL. DEC. 21, 1976.

Class 7B

3,501,294.—METH OF TREATNG SURFACE OF XIC PLATE W/METAL SALT OF A FATTY ACID TO IMPROVE IMAGE TRANSFER. MAR. 17, 1970. ARG. 0168294, AUS. 0419434, BEL. 0706369, CAN. 0880230, CHL. 0027764, FRA. 1544449, GRB. 1209644, ITL. 0822799, MEX. 0102265, PNM. 0002797, SWD. 0340047, VZL. 0023670.
3,690,754.—CONTROL SYSTEM FOR AN OPTICAL IMAGING SYSTEM. SEPT. 12, 1972. CAN. 0949797, GRB. 1337420.
3,884,825.—IMAGING COMPOSITION. MAY 20, 1975. AUS. 0467835, BEL. 0802879, CAN. 0995963, FRA. 7328589, GRB. 1437041, ITL. 0991465, SPN. 0417382.
3,973,843.—ELECTROSTATOGRAPHIC IMAGING APPARATUS. AUG. 10, 1976. AUS. 0467835, BEL. 0802879, CAN. 0995963, FRA. 7328589, GRB. 1437041, ITL. 0991465, SPN. 0417382.
4,064,285.—ELECTROPHOTOGRAPHIC DECALCOMANIAS. DEC. 20, 1977.
4,066,802.—COLORED XEROGRAPHIC IMAGE TRANSFER PROCESS. JAN. 3, 1978.
4,126,455.—ELECTROSTATOGRAPHIC IMAGING PROCESS AND RELATED APPARATUS. NOV. 21, 1978. AUS. 467835. BEL. 802879. CAN. 995963. FRA. 7328588. GRB. 1437041. ITL. 991465. SPN. 417382. USR. 637099.

Class 7C

3,620,616.—TRANSFER DRUM WITHDRAWAL APPARATUS. NOV. 16, 1971. BEL. 0751487, CAN. 0923543, FRA. 7020458, GRB. 1300267, ITL. 0893835.
3,633,543.—BIASED ELECTRODE TRANSFER APPARATUS. JAN. 11, 1972. CAN. 0914398, GRB. 1337123, JAP. 783769.
3,781,105.—CONSTANT CURRENT BIASING TRANSFER SYSTEM. DEC. 25, 1973. FRA. 7341869, GRB. 1448385.
3,795,441.—TRANSFER ROLLER. MAR. 5, 1974.
3,822,093.—TRANSFER REGULATING APPARATUS. JULY 2, 1974. FRA. 7428422.
3,830,589.—CONDUCTIVE BLOCK TRANSFER SYSTEM. AUG. 20, 1974.
3,832,053.—BELT TRANSFER SYSTEM. AUG. 27, 1974.
3,832,055.—FORAMINOUS VACUUM BIAS ROLL TRANSFER SYSTEM. AUG. 27, 1974. CAN. 0999316.
3,837,741.—CONTROL ARRANGEMENT FOR TRANSFER ROLL POWER SUPPLY. SEPT. 24, 1974.
3,837,883.—IMAGE TRANSFER PROCESS. SEPT. 24, 1974. ARG. 0203811, AUS. 0461437, BEL. 0760456, CAN. 0947368, FRA. 7047140, GRB. 1339577, ITL. 0913634, MEX. 0119591, SWD. 7017139.
3,842,800.—TRANSFER ROLLER ASSEMBLY. OCT. 22, 1974. BEL. 0793553, CAN. 9780221, FRA. 7237770, GRB. 1412454, ITL. 0973320, SPN. 0410173, SWD. 7216978.
3,846,020.—ELECTROSTATIC SHEET TRANSPORT SYSTEM. NOV. 5, 1974.
3,847,119.—TRANSFER ROLLER ASSEMBLY. NOV. 12, 1974. ARG. 0196224, ATR. 327002, AUS. 0464751, BEL. 0796983, CAN. 0977206, EGR. 0103979, FRA. 7305277, GER. 0103979, GRB. 1413711, ISR. 0041830, ITL. 0983617, MEX. 131018, SAF. 0722068, SPN. 0413018, STZ. 0558033, SWD. 7304021.
3,847,478.—SEGMENTED BIAS ROLL. NOV. 12, 1974.
3,848,204.—PRESSURE ADJUSTABLE ELECTROPHOTOGRAPHIC PRINTING MACHINE TRANSFER APPARATUS. NOV. 12, 1974.
3,860,436.—CONSTANT CURRENT BIASING TRANSFER SYSTEM. JAN. 14, 1975. FRA. 7341869, GRB. 1448385.
3,866,572.—FORAMINOUS ELECTROSTATOGRAPHIC TRANSFER SYSTEM. FEB. 18, 1975. BEL. 0815546, CAN. 1009503, FRA. 7418641, GRB. 1448386, ITL. 1012842, SPN. 0426760.
3,877,416.—HUMIDITY CORRECTED TRANSFER APPARATUS. APR. 15, 1975. BEL. 0814054, GRB. 1445671, ITL. 1009955, STZ. 0573612.
3,888,208.—IMAGE TRANSFER PROCESS. JUNE 10, 1975.
3,901,186.—TRANSFER ROLLER ASSEMBLY. AUG. 26, 1975. BEL. 0816848, FRA. 7423024.
3,924,943.—SEGEMENTED BIASED TRANSFER MEMBER. DEC. 9, 1975.
3,936,175.—INTERNALLY SHIELDED TRANSFER ROLLER. FEB. 3, 1976.
3,942,888.—STEPPED TRANSFER ROLLER. MAR. 9, 1976.
3,957,367.—A COLOR ELECTROSTATOGRAPHIC PRINTING MACHINE. MAY 18, 1976.
3,959,574.—BIASABLE MEMBER AND METHOD FOR MAKING. MAY 25, 1976.

3,994,579.—TRANSFER SYSTEM FOR ELECTROPHOTOGRAPHIC PRINTING. NOV. 30, 1976.
4,014,605.—TRANSFER SYSTEM WITH TAILORED ILLUMINATION. MAR. 29, 1977.
4,023,894.—TRANSFER APPARATUS. MAY 17, 1977.
4,025,182.—A TRANSFER APPARATUS FOR A COLOR ELECTROPHOGRAPHIC PRINTING MACHINE. MAY 24, 1977.
4,055,380.—TRANSFER CHARGE MAINTAINING SYSTEM. OCT. 25, 1977.
4,058,879.—COMPOSITIONS AND METHOD FOR ENHANCING ELECTRICAL LIFE OF POLYMERS USED IN XEROGRAPHIC DEVICE. NOV. 22, 1977.
4,062,812.—METHOD FOR EXTENDING THE FUNCTIONAL LIFE OF POLYMERS USED IN XEROGRAPHIC DEVICES. DEC. 13, 1977.
4,087,169.—TRANSFER ROLLER SYSTEM. MAY 2, 1978.
4,098,227.—BIASED FLEXIBLE ELECTRODE TRANSFER. JULY 4, 1978.
4,105,320.—TRANSFER OF CONDUCTIVE PARTICLES. AUG. 8, 1978.
4,110,024.—TRANSFER ASSEMBLY FOR ELECTROSTATIC TRANSFER OF A TONER IMAGE FROM A CURVILINEAR RECORDING. AUG. 29, 1978. BEL. 854404.
4,116,894.—COMPOSITIONS AND METHOD FOR ENHANCING ELECTRICAL LIFE OF COPOLYMERS. SEPT. 26, 1978.
4,134,147.—TRANSFER HUMIDITY CONTROL DEVICE. JAN. 9, 1979.
4,141,728.—TRANSFER OF DRY DEVELOPED ELECTROSTATIC IMAGE USING PLURAL OPPOSITELY CHARGED FIELDS. FEB. 27, 1979.
4,190,348.—LEAD EDGE TRANSFER SWITCHING. FEB. 26, 1980.
4,193,680.—TRANSFER SHEET DRYING DEVICE FOR ELECTROPHOTOGRAPHIC COPYING MACHINE. MAR. 18, 1980.

Class 7C 1

3,244,083.—XEROGRAPHIC DEVICE. APR. 5, 1966. AUS. 0284069, CAN. 0710975, FRA. 1379820, GRB. 1030449, JAP. 0654006.
3,339,069.—CORONA CHARGING DEVICE W/MEANS TO PREVENT TONER DUST CONTAMINATION. AUG. 29, 1967. CAN. 0788539, FRA. 1450010, GRB. 1116687, ITL. 0730715, JAP. 0875339, MEX. 0089459.
3,357,325.—XEROGRAPHIC TRANSFER APPARATUS. DEC. 12, 1967. CAN. 0812525.
3,444,369.—METHOD AND APPARATUS FOR SELECTIVE CORONA TREATMENT OF TONER PARTICLES. MAY 13, 1969. ARG. 0167581, ATR. 0288863, AUS. 0415969, BEL. 0704919, BRA. 6791610, CAN. 0845871, DNK. 0119094, FRA. 1540696, GER. 1597884, GRB. 1203811, HOL. 0152375, ITL. 0853627, JAP. 0587935, MEX. 0099470, SPN. 0345918, STZ. 0487438, SWD. 0337986, VZL. 0023669.
3,765,330.—XEROPRINTING EMPLOYING LETTER PRESS SURFACE COVERED WITH A LAYER OF RESISTIVE MATERIAL. OCT. 16, 1973. CAN. 0949806, GRB. 1374651.
3,850,519.—XEROGRAPHIC IMAGE TRANSFER APPARATUS. NOV. 26, 1974. ARG. 0202116, BEL. 0809579, GRB. 1446252, ITL. 1006786, MEX. 0135278, SPN, 0422230, STZ. 0567748, SWD. 7400197, VZL. 0033340.
3,870,515.—METHOD FOR ELECTROSTATIC PAPER STRIPPING BY NEUTRALIZATION OF TRANSFER CHARGE. MAR. 11, 1975.
3,877,417.—TRANSFER CORONA GENERATING DEVICE WITH SUPPORT BRUSHES. APR. 15, 1975.
3,918,403.—CORONA TRANSFER MECHANISM. NOV. 11, 1975.
3,920,325.—MOISTURE STABLE BIAS TRANSFER ROLL. NOV. 18, 1975.
3,966,199.—BELT TRANSFER LOADING SYSTEM. JUNE 29, 1976.
4,014,606.—REPRODUCTION MACHINE WITH TEXTURED TRANSFER ROLLER. MAR. 29, 1977.
4,017,065.—TRANSFER FUSING SPEED COMPENSATION. APR. 12, 1977.
4,017,067.—TRANSFER-FUSING SPEED COMPENSATION. APR. 12, 1977.
4,058,306.—DETACK AND STRIPPING SYSTEM. NOV. 15, 1977.
4,076,407.—DUPLEX COPYING TRANSFER SYSTEM. FEB. 28, 1978.
4,077,709.—TRANSFER CHARGE CONTROL SYSTEM. MAR. 7, 1978.
4,080,053.—TRANSFER APPARATUS AND METHOD. MAR. 21, 1978.
4,236,809.—LOW RESOLUTION CORRECTION APPARATUS AND METHOD FOR ELECTROPHOTOGRAPHIC COPIERS. DEC. 2, 1980.

Class 7C 1A

3,319,604.—XEROGRAPHIC TRANSFER APPARATUS. MAY 16, 1967.

Class 7C 2

3,132,050.—XEROGRAPHIC TRANSFER APPARATUS. MAY 5, 1964.
3,795,441.—TRANSFER ROLLER. MAR. 5, 1974.
3,817,616.—THERMAL CHAMBER FOR DEVELOPABILITY REGULATING APPARATUS. JUNE 18, 1974. CAN. 0991247, GRB. 1439527.
3,838,918.—TRANSFER APPARATUS. OCT. 1, 1974. BEL. 0811434, GRB. 1445243, ITL. 1008903.
3,892,962.—THERMAL CHAMBER FOR A DEVELOPABILITY REGULATING APPARATUS. JULY 1, 1975. CAN. 0991247, GRB. 1439527.

Class 7C 3

3,244,083.—XEROGRAPHIC DEVICE. APR. 5, 1966. AUS. 0284069, CAN. 0710975, FRA. 1379820, GRB. 1030449, JAP. 0654006.
3,612,677.—ELECTROSTATIC TRANSFER APPARATUS. OCT. 12, 1971. CAN. 0941220, GRB. 1296742.
3,697,170.—AUTOMATIC DUPLEXING APPARATUS. OCT. 10, 1972. CAN. 0948269.
3,697,171.—SIMULTANEOUS IMAGE TRANSFER. OCT. 10, 1972. ARG. 0192330, AUS. 0461728, BEL. 0777016, CAN. 0948267, FRA. 7146256, GRB. 1368456, ITL. 0944212, MEX. 0124562, SWD. 0366123, VZL. 32765.
3,702,482.—BIAS ROLL TRANSFER. NOV. 7, 1972. ARG. 0191238, BEL. 0777017, CAN. 0962890, FRA. 7146257, GRB. 1368500, ITL. 0944209, MEX. 0126775.
3,734,015.—SINGLE PASS DUPLEXING BY SEQUENTIAL TRANSFER. MAY 22, 1973. ARG. 0192332, BEL. 7777018, CAN. 0948691, FRA. 7146258, GRB. 1368496, ITL. 0944211, MEX. 0124992.
3,902,801.—COLOR CORRECTED PRINTING SYSTEM. SEPT. 2, 1975. GRB. 1465590.
4,093,457.—METHOD OF TRANSFER.

Class 7C 4

3,444,369.—METHOD AND APPARATUS FOR SELECTIVE CORONA TREATMENT OF TONER PARTICLES. MAY 13, 1969. ARG. 0167581, ATR. 0288863, AUS. 0415969, BEL. 0704919, BRA. 6791610, CAN. 0845871, DNK. 0119094, FRA. 1540696, FRA. 1540696, GRB. 1203811, HOL. 0152375, ITL. 0853627, JAP. 0587935, MEX. 0099470, SPN. 0345918, STZ. 0487438, SWD. 0337986, VZL. 0023669.
3,640,249.—TRANSFER APPARATUS. FEB. 8, 1972. BEL. 0758058.
3,647,292.—TRANSFER APPARATUS. MAR. 7, 1972. AUS. 0450919, BEL. 0759452, CAN. 0919004, FGR. 0086978, FRA. 7043065, GRB. 1319148, ITL. 0909441, JAP. 0773213, SPN. 0385845, STZ. 0519187, SWD. 7015876.
3,650,617.—SWITCHING DETECTOR-A. MAR. 21, 1972.
3,650,618.—SWITCHING DETECTOR-B. MAR. 21, 1972.
3,687,545.—SHORT FOCAL LENTH OPTICAL IMAGING SYSTEM. AUG. 29, 1972. BEL. 0747977, CAN. 0913438, FRA. 7011547, GRB. 1300156, ITL. 0898935, JAP. 0731226.
3,729,311.—ELECTROSTATIC TRANSFER METHOD. APR. 24, 1973.
3,854,974.—METHOD FOR TRANSFERRING A TONER IMAGE. DEC. 17, 1974.
3,926,824.—ELECTROSTATOGRAPHIC DEVELOPER COMPOSITION. DEC. 16, 1975. ARG. 0192480, AUS. 0466319, BEL. 0793098, CAN. 0985552, FRA. 7245403, GRB. 1417179, ITL. 0973327, SPN. 0410171, STZ. 0028663, SWD. 7216977.
3,932,035.—APPARATUS FOR TRANSFERRING A TONER IMAGE. JAN. 13, 1976.
3,994,726.—LAMINATED FLEXIBLE PHOTORECEPTOR. NOV. 30, 1976. GRB. 1429517.
4,002,476.—METHOD OF DEVELOPING RESILIENT PHOTOCONDUCTIVE ELEMENT. JAN. 11, 1977. GRB. 1429517.
4,023,967.—ELECTROPHOTOGRAPHIC LIQUID DEVELOPMENT METHOD IN WHICH A UNIFORM SUBSTANTIAL INTERFACE CONTACT. MAY 17, 1977. BEL. 0819537, GRB. 1429518.
4,188,213.—COLOR CORRECTED PRINTING SYSTEM. FEB. 12, 1980. CAN. 1037545, GRB. 1465590.

Class 7E

3,375,781.—REGISTRATION MECHANISM FOR A REPRODUCTION MACHINE. APR. 2, 1968.
3,375,782.—PROGRAMMING MECHANISM FOR A REPRODUCTION MACHINE. APR. 2, 1968.
3,422,756.—PAPER SUPPORT AND REGISTRATION MEANS FOR REPRODUCTION MACHINE. JAN. 21, 1969.
3,499,374.—XEROGRAPHIC PRINTER. MAR. 10, 1970. AUS. 0415164, BEL. 0677146, CAN. 0846424, FRA. 1470069, GRB. 1135603, ITL. 0762255, MEX. 0091183, SWD. 0327142.
3,687,541.—XEROGRAPHIC DUPLEX TECHNIQUE. AUG. 29, 1972. CAN. 0948268.
3,847,642.—METHOD FOR TRANSFERRING ELECTROSTATOGRAPHICALLY FORMED IMAGES. NOV. 12, 1974.
3,848,204.—PRESSURE ADJUSTABLE ELECTROPHOTOGRAPHIC PRINTING MACHINE TRANSFER APPARATUS. NOV. 12, 1974.
3,854,974.—METHOD FOR TRANSFERRING A TONER IMAGE. DEC. 17, 1974.
3,867,168.—TRANSPARENCY. FEB. 18, 1975.
3,888,208.—IMAGE TRANSFER PROCESS. JUNE 10, 1975.
3,932,035.—APPARATUS FOR TRANSFERRING A TONER IMAGE. JAN. 13, 1976.
3,936,174.—TRANSFER ROLLER WITH STATIONARY INTERNAL ELECTRODE. FEB. 3, 1976.
3,954,332.—REPRODUCTION MACHINE WITH IMPROVED TRANSFER ROLL. MAY 4, 1976.
3,954,333.—TRANSFER ROLL HAVING MEANS FOR MONITORING AND CONTROLLING THE RESITIVITY THEREOF. MAY 4, 1976.
3,977,779.—ELECTROSTATOGRAPHIC TRANSFER WITH AIR. AUG. 31, 1976. GRB. 1459450.

Class 7E 1

3,374,769.—TONER FUSING APPARATUS. MAR. 26, 1968. CAN. 0819836, FRA. 1396610, GER. 1522709, GRB. 1152067, JAP. 0534764.
3,685,896.—DUPLICATING METHOD AND APPARATUS. AUG. 22, 1972.
3,845,742.—FUSER ROLL CONSTRUCTION. NOV. 5, 1974. GRB. 1450882.
3,849,062.—REINFORCED FUSER ROLL CONSTRUCTION. NOV. 19, 1974.
4,064,285.—ELECTROPHOTOGRAPHIC DECALCOMANIAS. DEC. 20, 1977.
4,066,802.—COLORED XEROGRAPHIC IMAGE TRANSFER PROCESS. JAN. 3, 1978.
4,234,250.—ELECTROPHOTOGRAPHIC PRINTING SYSTEM. NOV. 18, 1980. BEL. 868940.
4,255,040.—POSITIVE OVERLAY ELECTRONIC XEROGRAPHIC PRINTER. MAR. 10, 1981.

Class 7E 3

3,591,276.—METHOD AND APPARATUS FOR OFFSET XEROGRAPHIC REPRODUCTION. JULY 6, 1971. CAN. 0894931, GER. 1811893, GRB. 1245426, JAP. 0648075.
3,682,677.—BACKGROUND REMOVAL. AUG. 8, 1972.
3,690,252.—LITHOGRAPHIC INKING APPARATUS. SEPT. 12, 1972. CAN. 0919006.
4,064,285.—ELECTROPHOTOGRAPHIC DECALCOMANIAS. DEC. 20, 1977.

Class 8

3,961,236.—CONSTANT POWER REGULATOR FOR XEROGRAPHIC FUSING SYSTEM JUNE 1, 1976.
4,027,138.—A FUSER RELEASE MATERIAL DISPENSER. MAY 31, 1977.
4,104,692.—DEVICE FOR DETECTING ABNORMAL TEMPERATURE IN FIXER. AUG. 1, 1978.

Class 8A

D.233,414.—TONER BOTTLE OR THE LIKE. OCT. 29, 1974.
3,130,064.—METHOD OF FORMING RESIN PATTERN ON A PAPER RECORD CARD. APR. 21, 1964.
3,778,222.—FIRE PREVENTION APPARATUS. DEC. 11, 1973.
3,830,590.—SORTER APPARATUS OF PRINTER SYSTEM. AUG. 20, 1974. AUS. 0466096, BEL. 0791361, CAN. 0998425, CHL. 0027890, EGR. 0102488, FRA. 7240557, GRB. 1400619, IND. 0137843, ISR. 0040831, ITL. 0970911, MEX. 0128646, NOR. 0135210, NZL. 0168971, PLP. 0008722, PTG. 0058789, SAF. 0728101, SPN. 0408628, STZ. 0560108.
3,834,861.—PRESSURE HEATED FUSER ASSEMBLY. SEPT. 10, 1974. GRB. 1424307.
3,847,391.—STACKING CONTROL APPARATUS. NOV. 12, 1974. ARG. 0194365, AUS. 0454812, BEL. 0783855, CAN. 0969205, FRA. 7218318, GRB. 1365400, ITL. 0955693, MEX. 0128712, SPN. 0403109, STZ. 0557242.
3,848,868.—SHEET SORTING APPARATUS. NOV. 19, 1974. CAN. 1005387, GRB. 1440557.
3,856,461.—REPRODUCTION MACHINE FUSER. DEC. 24, 1974.
3,856,462.—REPRODUCTION MACHINE FUSER. DEC. 24, 1974. BEL. 0821050, FRA. 7435222.
3,868,744.—CLEANING APPARATUS FOR HEATED PRESSURE ROLL FUSER. MAR. 4, 1975. AUS. 0466542, BEL. 0794569, CAN. 1007407, FRA. 7302888, GRB. 1424132, ITL. 0978560, SPN. 0410976, SWD. 7301015.
3,883,921.—CLEANING ROLL APPARATUS HAVING REJUVENATED CLEANING SURFACE. MAY 20, 1975.
3,936,658.—FUSER APPARATUS FOR ELECTROSTATIC REPRODUCING MACHINES. FEB. 3, 1976. BEL. 0844831.
3,998,450.—IMPROVED SORTING APPARATUS. DEC. 21, 1976. GRB. 1433088.
4,004,549.—ROLL FUSER. JAN. 25, 1977.
4,006,985.—XEROGRAPHIC APPARATUS HAVING TIME CONTROLLED FUSING. FEB. 8, 1977.
4,032,746.—CONTROL SYSTEM FOR A FUSING APPARATUS. JUNE 28, 1977.
4,035,140.—FIXING DEVICE IN AN ELECTROPHOTOGRAPHIC COPYING MACHINE. JULY 12, 1977.
4,045,163.—HEATED FUSER RELEASE AGENT CONTAINER. AUG. 30, 1977.
4,063,530.—IMAGE FIXING. DEC. 20, 1977.
4,065,586.—FIXING METHOD USING POLYARYLSILOXANES AS RELEASE AGENTS. DEC. 27, 1977.
4,078,286.—HEAT FIXING ROLL FOR ELECTROPHOTOGRAPHIC DUPLICATORS. MAR. 14, 1978.
4,078,948.—FIXING METHOD. MAR. 14, 1978.
4,133,522.—PIVOTING TRAY SORTING APPARATUS. JAN. 9, 1979. CAN. 1011681. GRB. 1455159.
4,144,835.—CONTACT HEAT FIXING APPARATUS. MAR. 20, 1979.
4,146,659.—FUSING TONER ON FUSER MEMBERS MADE OF NOBLE METALS AND ALLOYS THEREOF. MAR. 27, 1979.
4,170,957.—FIXING METHOD AND DEVICE USING POLYARYLSILOXANES AS A RELEASE AGENT. OCT. 16, 1979.
4,172,721.—DYE-AMPLIFIED IMAGING PROCESS. OCT. 30, 1979. AUS. 494739, BEL. 822400, CAN. 1033041, FRA. 7438506, GER. 7438730, GRB. 1484706, ITL. 1025877, SPN. 432205, SWD. 74144650.
4,185,140.—POLYMERIC RELEASE AGENTS FOR ELECTROSCOPIC THERMOPLASTIC TONERS. JAN. 22, 1980. BEL. 831662, FRA. 7523193, MEX. 140595.
4,188,423.—SOLVENT EXTRACTED HEAT FUSER MEMBER. FEB. 12, 1980.
4,196,256.—LONG LIFE FUSER ROLL. APR. 1, 1980.
257,699.—METAL FILLED, MULTI-LAYERED FLASTOMER FUSER MEMBER. MAR. 24, 1981.
4,264,181.—METAL-FILLED NUCLEOPHILIC ADDITION CURED ELASTOMER FUSER MEMBER. APR. 28, 1981.
4,257,699.—METAL FILLED, MULIT-LAYERED FLASTOMER FUSER MEMBER. MAR. 24, 1981.
4,264,181.—METAL-FILLED NUCLEOPHILIC ADDITION CURED ELASTOMER FUSER MEMBER. APR. 28, 1981.
4,272,179.—METAL-FILLED ELASTOMER FUSER MEMBER. JUNE 9, 1981.

Class 8A 1

RE.28,802.—FUSING APPARATUS. MAY 4, 1976. CAN. 0990779, FRA. 7338110, GRB. 1436563.
3,219,326.—XEROGRAPHIC FUSING APPARATUS. NOV. 23, 1965. CAN. 0716212.
3,374,769.—TONER FUSING APPARATUS. MAR. 26, 1968. CAN. 0819836, FRA. 1396610, GER. 1522709, GRB. 1152067, JAP. 0534764.
3,396,401.—APPARATUS AND METHOD FOR MARKING OF INTELLIGENCE ON A RECORD MEDIUM. AUG. 6, 1968.
3,409,280.—POROUS DRUM FUSER. NOV. 5, 1968.
3,411,932.—QUALITY XEROGRAPHIC REPRODUCTIONS. NOV. 19, 1968. CAN. 0788948, FRA. 1459094, GER. 1497213, GRB. 1112000, ITL. 0725763, MEX. 0078900.
3,498,592.—HEAT FIXING APPARATUS FOR FUSIBLE MATERIAL. MAR. 3, 1970. ARG. 0180584, AUS. 0432632, BEL. 0733403, CAN. 0878082, CZC. 0164830, FRA. 6917080, GRB. 1269716, ITL. 0864984, MEX.

0111516, PNM. 0001417, SPN. 0367614, STZ. 0506821, SWD. 0345328, TIW. 0006603, USR. 0340215.
3,519,253.—SELECTIVE XEROGRAPHIC FUSER. JULY 7, 1970. ARG. 0168753, ATR. 0293871, AUS. 0416089, BEL. 0704925, CAN. 0843377, CHL. 0023289, CLB. 0017682, DNK. 0123893, FRA. 1540701, GRB. 1193355, GUA. 0002145, HUN. 0157550, ITL. 0830722, JAM. 0001850, MEX. 0107890, PRU. 0009344, SAF. 0676018, SPN. 0345919, STZ. 0470698, SWD. 0322690, TRD. 0000113, URG. 0008846, USR. 0372852, VZL. 0026101.
3,535,492.—FUSING APPARATUS. OCT. 20, 1970. ARG. 0181204, BEL. 0733663, CAN. 0872978, FRA. 6917190, GRB. 1266932, HOL. 149013, ITL. 0865914, MEX. 0110755.
3,623,710.—FIXING ARRANGEMENT. NOV. 30, 1971.
3,648,991.—METHOD AND APPARATUS FOR SELECTIVE FUSING. MAR. 14, 1972.
3,667,742.—FIXING ARRANGEMENT. JUNE 6, 1972. BEL. 0777318, CAN. 0928766, FRA. 7147890, GRB. 1368307, ITL. 0944393.
3,765,828.—FUSING APPARATUS. OCT. 16, 1973. CAN. 0991256, GRB. 1428800.
3,770,346.—METHOD AND APPARATUS FOR FUSER ASSEMBLY COOLING IN AN ELECTROSTATOGRAPHIC MACHINE. NOV. 6, 1973. CAN. 1002582, GRB. 1421863.
3,781,517.—FUSER THERMAL PROTECTOR. DEC. 25, 1973. GRB. 1441702.
3,792,227.—FUSER APPARATUS. FEB. 12, 1974.
3,819,259.—LIGHT ATTENUATOR. JUNE 25, 1974. GRB. 1428799.
3,826,892.—FUSING APPARATUS. JULY 30, 1974. CAN. 0990779, FRA. 7338110, GRB. 1436563.
3,849,905.—FUSING APPARATUS. NOV. 26, 1974.
3,849,907.—FUSING APPARATUS. NOV. 26, 1974.
3,869,696.—FUSER APPARATUS. MAR. 4, 1975.
3,874,892.—ELECTROSTATOGRAPHIC FUSING PROCESS EMPLOYING REPLACEABLE LINER. APR. 1, 1975. CAN. 0980405, GRB. 1374652.
3,898,424.—RADIANT FUSER XEROGRAPHIC REPRODUCING APPARATUS. AUG. 5, 1975.
3,907,492.—FUSING APPARATUS. SEPT. 23, 1975. CAN. 0990779, GRB. 1436563.
3,939,326.—DUAL RIBBON FUSER. FEB. 17, 1976.
3,944,784.—DUAL RIBBON FUSER. MAR. 16, 1976.
3,953,709.—TWO SOURCE RADIANT FUSER FOR XEROGRAPHIC REPRODUCING APPARATUS. APR. 27, 1976.
3,987,757.—PAPER HANDLING IMPROVEMENTS IN RADIANT FUSER VIA CORRUGATION OF PAPER. OCT. 26, 1976.
4,001,622.—DIRECTIONAL SOURCES OF ELECTROMAGNETIC RADIATION. JAN. 4, 1977. GRB. 1443340.
4,015,103.—A FUSER CONVEYOR BELT. MAR. 29, 1977.
4,021,641.—RADIANT FUSER FOR FIXING TONER IMAGES. MAY 3, 1977.
4,056,706.—APPARATUS & METHOD FOR EXTENDING FUSER RELEASE LIFE. NOV. 1, 1977.
4,064,313.—HEAT FIXING MEMBER FOR ELECTROPHOTOGRAPHIC COPIERS. DEC. 20, 1977.
4,078,285.—HARD ALLOY FUSER MEMBERS. MAR. 14, 1978.
4,092,099.—COPIER PAPER DELIVERY MEANS IN A HEAT-FIXING DEVICE OF A COPYING MACHINE. MAY 30, 1978.
4,102,681.—TRANSFER AND FUSING METHOD. JULY 25, 1978. CAN. 990779, FRA. 7338110.

Class 8A 1A

3,445,626.—FUSING APPARATUS WITH FLASH LAMP CIRCUIT. MAY 20, 1969. CAN. 0843525, GRB. 1180604, JAP. 1075585.
3,465,203.—FLASH LAMP FOR ELECTROSCOPIC TONER. SEPT. 2, 1969. CAN. 0843526, GER. 1589315, GRB. 1185687, JAP. 0758339.
3,474,223.—SELECTIVE FLASH FUSING. OCT. 21, 1969. CAN. 0851811, FRA. 1546257, GRB. 1208770, JAP. 0558445.
3,529,129.—REFLECTION TYPE FLASH FUSER. SEPT. 15, 1970. ARG. 0180678, BEL, 0728716, CAN. 0855311, FRA. 6004567, GRB. 1252465, ITL. 0866971, JAP. 0661180, MEX. 0107835.
3,566,076.—TONER FIXING APPARATUS. FEB. 23, 1971. CAN. 0913164, GRB. 1256471.
3,655,280.—XEROGRAPHIC FUSING METHOD AND APPARATUS. APR. 11, 1972.
3,765,828.—FUSING APPARATUS. OCT. 16, 1973. CAN. 0991256, GRB. 1428800.
3,792,227.—FUSER APPARATUS. FEB. 12, 1974.
3,819,259.—LIGHT ATTENUATOR. JUNE 25, 1974. GRB. 1428799.
3,865,081.—MAGNETIC BRUSH DEVELOPING APPARATUS. FEB. 11, 1975.
3,869,696.—FUSER APPARATUS. MAR. 4, 1975.
3,903,394.—READ/WRITE APPARATUS FOR MAGNETIC RECORDERS. SEPT. 2, 1975.
3,920,952.—DUPLEX FUSING APPARATUS AND METHOD. NOV. 18, 1975.
3,935,424.—FLASH FUSING APPARATUS. JAN. 27, 1976.
3,944,783.—HIGH EFFICIENCY NON CAVITY RADIANT METHOD AND APPARATUS. MAR. 16, 1976.
3,980,424.—FUSER CLEANING ROLLER. SEPT. 14, 1976.
4,001,541.—FLASH FUSING SYSTEM WITH ENERGY CONTROL. JAN. 4, 1977.
4,027,199.—FLASH LAMP MODULATOR SYSTEM. MAY 31, 1977.
4,039,770.—INTERFACE SYSTEM TO CONTROL FLASH LAMP. AUG. 2, 1977.
4,050,801.—RELEASE AGENT APPLICATION SYSTEM FOR A HEATED FUSER ROLL. SEPT. 27, 1977.
4,050,803.—QUICK RELEASE MECHANISM FOR A BACKUP ROLL FUSER EMPLOYED IN A COPIER APPARATUS. SEPT. 27, 1977.
4,090,108.—INTERFACE SYSTEM TO CONTROL FLASH LAMP. MAY 16, 1978.

Class 8A 1B

3,357,401.—XEROGRAPHIC FUSER MONITORING APPARATUS. DEC. 12, 1967.
3,432,639.—FUSING APPARATUS. MAR. 11, 1969. CAN. 0851810, GRB. 1194234, JAP. 0608702.
3,437,407.—XEROGRAPHIC FUSING SYSTEM. APR. 8, 1969. CAN. 0842370, JAP. 0758338.
3,445,626.—FUSING APPARATUS WITH FLASH LAMP CIRCUIT. MAY 20, 1969. CAN. 0843525, GRB. 1180604, JAP. 1075585.
3,449,546.—INFRA-RED HEATER. JUNE 10, 1969. ARG. 0170237, ATR. 0303518, AUS. 0402657, BEL. 0700101, BRA. 6788714, CAN. 0852819, CHL. 0023085, DNK. 0118703, FRA. 1527629, GRB. 1187481, ITL. 0805313, MEX. 0101251, NOR. 0123480, PLD. 0068551, PRU. 0009320, SAF. 0673601, SPN. 0341906, STZ. 0499143, SWD. 0332936, URG. 0008615, VZL. 0026103.
3,507,333.—FIRE PREVENTION SYSTEM. APR. 21, 1970. BEL. 0722599, CAN. 0910255, FRA. 1589864, GRB. 1229495, ITL. 0845253, JAP. 0752504.
3,558,853.—FUSER SYSTEM FOR COPYING MACHINE. JAN. 26, 1971. ARG. 0186145, ATR. 0309984, AUS. 0446113, BEL. 0750389, BRA. 7019023, CAN. 0874013, CZC. 0168526, EGR. 0083065, FRA. 7017316, GRB. 1309129, ITL. 0893097, JAP. 0836943, MEX. 0117915, NZL. 0160101, SPN. 0379651, STZ. 0506817, SWD. 0357840, TIW. 0006834, VZL. 0032597.
3,588,445.—FUSER CONTROL CIRCUIT. JUNE 28, 1971.
3,735,092.—FUSER CONTROL CIRCUIT FOR COPYING APPARATUS. MAY 22, 1973. CAN. 0991254, GRB. 1406655.
3,781,516.—FUSER CONTROL SYSTEM. DEC. 25, 1973. MEX. 0135422.
3,790,747.—REGULATOR FOR XEROGRAPHIC FUSING APPARATUS. FEB. 5, 1974. ARG. 0200245, AUS. 0467385, BEL. 0789339, CAN. 0991252, FRA. 7234199, GRB. 1397586, ITL. 0972690, MEX, 0129168, SPN. 0409974, STZ. 0554008, SWD. 7215167, VZL. 0032607.
3,833,794.—FIXING UNIT FOR USE IN A DUPLICATING APPARATUS. SEPT. 3, 1974.
3,851,144.—FEEDBACK FUSER FOR 730S. NOV. 26, 1974.
3,989,370.—ADAPTIVE FUSER CONTROLLER. NOV. 2, 1976.
3,989,926.—DEVICE FOR PREVENTING OVERHEATING OF ELECTROPHOTOGRAPHIC FIXING DEVICE. NOV. 2, 1976.
4,032,746.—CONTROL SYSTEM FOR A FUSING APPARATUS. JUNE 28, 1977.

Class 8A 2

3,349,702.—FUSER HAVING HEATED AND UNHEATED PORTIONS FOR PRINT FIXING PURPOSES. OCT. 31, 1967. CAN. 0833789, MEX. 0096468.
3,356,831.—XEROGRAPHIC FUSING APPARATUS. DEC. 5, 1967. CAN. 0798466, FRA. 1465786, GER. 1497228, GRB. 1117339, ITL. 0749552. JAP. 0512652.
3,584,195.—HEAT FIXING APPARATUS. JUNE 8, 1971. GRB. 1322354.
3,718,390.—MICROFICHE INDEXER. FEB. 27, 1973. ARG. 0190620, BEL. 0768712, CAN. 0946659, GRB. 1350656, ITL. 0927453, MEX. 0121626, SWD. 7107727.
3,788,873.—FIXING METHOD UTILIZING INTERMEDIATE HEAT TRANSFER. JAN. 29, 1974.
3,810,735.—HEAT FIXING APPARATUS FOR FUSIBLE MATERIAL. MAY 14, 1974.

3,849,628.—NON-CONTACT TEMPERATURE SENSOR FOR ROLL FUSER OF A XEROGRAPHIC REPRODUCTION APPARATUS. NOV. 19, 1974. CAN. 1002583, GRB. 1322612.
3,881,859.—STRIPPER FINGER DESIGN TO PREVENT OIL-ON-THE-COPY. MAY 6, 1975.
3,900,590.—XEROGRAPHIC FUSING APPARATUS. AUG. 19, 1975. CAN. 0992614, GRB. 1192444.
3,904,354.—RESILIENT STRIPPER MEMBERS FORMING A PART OF A FUSER ROLL. SEPT. 9, 1975.
3,937,637.—ROLL CONTACT FUSER. FEB. 10, 1976.
3,940,235.—IMMERSIONS FUSING. FEB. 24, 1976.
3,965,855.—IMMERSION FUSING. JUNE 29, 1976.
3,976,814.—FUSING DEVICE & METHOD. AUG. 24, 1976.
3,997,691.—FUSING SURFACE AND METHOD FOR FIXING TONER. DEC. 14, 1976.
4,000,339.—FUSING SURFACE & METHOD FOR FIXING XEROGRAPHIC TONER. DEC. 28, 1976.
4,015,103.—A FUSER CONVEYOR BELT. MAR. 29, 1977.
4,029,827.—MERCAPTO FUNCTIONAL POLYORGANOSILOKANE RELEASE AGENTS FOR FUSERS IN ELECTROSTATIC COPIERS. JUNE 14, 1977. SPN. 0439743.
4,054,410.—FUSING DEVICE. OCT. 18, 1977.
4,056,706.—APPARATUS & METHOD FOR EXTENDING FUSER RELEASE LIFE. NOV. 1, 1977. FRA 7611767.
4,075,390.—FUSING SURFACE AND METHOD FOR FIXING TONER. FEB. 21, 1978.
4,101,686.—METHOD OF FUSING TONER IMAGES USING FUNCTIONALIZED POLYMERIC RELEASE AGENTS. JULY 18, 1978. BEL. 831662, FRA. 7523193.
4,150,181.—FIXING METHOD USING POLYSILOXANE-FLUOROCARBON BLENDS AS RELEASE AGENTS. APR. 17, 1979.
4,193,680.—TRANSFER SHEET DRYING DEVICE FOR ELECTROPHOTOGRAPHIC COPYING MACHINE. MAR. 18, 1980.

Class 8A 2A

3,256,002.—XEROGRAPHIC FIXING DEVICE. JUNE 14, 1966. ADN. 0000470, AUS. 0295646, BRS. 0013738, BRU. 0000569, CAN. 0796441, FIJ. 0000343, GHA. 0000995, GIB. 1089537, GIE. 0006669, GRB. 1089537, GUR. 1089537, HGK. 0009269, ISR. 0030229, JAP. 0537119, JER. 0000P98, KEN. 0001745, MAU. 1917571, MLS. 0015169, NIG. 0001618, NZL. 0148733, SBH. 0005369, SGP. 0008369, SHL. 0000018, SLN. 3677286, SRK. 0000386, STZ. 0458077, UGD. 0000369.
3,268,351.—XEROGRAPHIC FIXING METHOD AND APPARATUS. AUG. 23, 1966. JAP. 0489660.
3,291,466.—XEROGRAPHIC FIXING DEVICE. DEC. 13, 1966. CAN. 0800935, FRA. 1458647, GRB. 1122628, ITL. 0729649, JAP. 0524526, MEX. 0090836.
3,324,791.—XEROGRAPHIC ROLLER FUSER DRIVE APPARATUS. JUNE 13, 1967. CAN. 0825903, GRB. 1135744, JAP. 0512655, STZ. 0520889.
3,327,096.—TEMPERATURE CONTROL CIRCUIT. JUNE 20, 1967. CAN. 0797970, FRA. 1448641, GRB. 1113451, ITL. 0729649, JAP. 0572184, MEX. 0085994.
3,331,592.—XEROGRAPHIC FUSING APPARATUS. JULY 18, 1967. CAN. 0823589, JAP. 0512657, MEX. 0108575.
3,357,249.—TEMPERATURE SENSOR. DEC. 12, 1967. CAN. 0810332, GER. 1690654, GRB. 1171381.
3,435,500.—PRESSURE ROLL AND METHOD OF MANUFACTURING. APR. 1, 1969. ARG. 0153406, AUS. 0408490, BEL. 0670480, BRA. 0083780, CAN. 0832922, FRA. 1450156, GER. 1546792, GRB. 1124036, ITL. 0730679, JAP. 0669366, MEX. 0107366, VZL. 0024008.
3,437,032.—HEATED FUSER ROLL. APR. 8, 1969. ARG. 0155221, AUS. 0043081, BEL. 0683308, CAN. 0800936, FRA. 1484969, GRB. 1137227, ITL. 0773369, JAP. 1071499, MEX. 0093105, SPN. 0328427, STZ. 0467476, SWD. 0321410, VZL. 0023990.
3,449,548.—FUSING DEVICE. JUNE 10, 1969.
3,498,596.—HEAT FIXING APPARATUS FOR FUSIBLE MATERIAL. MAR. 3, 1970. ARG. 0181805, AUS. 0428652, BEL. 0733408, BRA. 6909134, CAN. 0860450, CZC. 0150764, FRA. 6917085, GRB. 1258152, ITL. 0865073, MEX. 0111517, PLD. 0079991, PNM. 0002166, SPN. 0367312, STZ. 0505411, SWD. 0345329, TIW. 0006194, USR. 0230669, VZL. 0025073.
3,539,161.—HEAT FIXING APPARATUS FOR FUSIBLE MATERIALS. NOV. 10, 1970. CAN. 0889987.
3,612,820.—HEAT FIXING APPARATUS FOR LENGTHY FUSIBLE MATERIALS. OCT. 12, 1971.
3,649,992.—CLEANING APPARATUS FOR FUSING SYSTEM. MAR. 21, 1972. CAN. 0980517, GRB. 1340684.
3,667,742.—FIXING ARRANGEMENT. JUNE 6, 1972. BEL. 0777318, CAN. 0928766, FRA. 7147890, GRB. 1368307, ITL. 0944393.
3,690,176.—TEMPERATURE SENSING APPARATUS. SEPT. 12, 1972. GRB. 1383087.
3,718,116.—OIL DISPENSING APPARATUS. FEB. 27, 1973. CAN. 0984895.
3,745,972.—WICKING APPARATUS. JULY 17, 1973. CAN. 0991251, GRB. 1397626.
3,751,216.—FUSER ROLL ASSEMBLY. AUG. 7, 1973.
3,754,819.—APPARATUS FOR PLACING ROLLERS IN CONTACT IN A PRESSURE FUSER ASSEMBLY. AUG. 28, 1973.
3,776,760.—METHOD FOR MANUFACTURING A TETRAFLUOPOETHLENE POLYMER-COATED ROLL. DEC. 4, 1973. ARG. 0199302, ATR. 0335842, AUS. 0165141, BEL. 0789728, CAN. 0990149, GRB. 1410025, NZL. 0168554, SAF. 0727133, STZ. 0028514.
3,796,183.—FREE FLOATING PRESSURE BIASING APPARATUS FOR CLEANING ROLL FUSER. MAR. 12, 1974.
3,799,401.—SILICONE OIL CAPACITY CONTROL USING POLYURETHANE BELT. MAR. 26, 1974.
3,820,591.—APPARATUS FOR SENSING DIMENSION OF SHEETS OF MATERL TO BE TRNPRTD THROUGH ELCTRSTIC REPRDCTN M. JUNE 28, 1974. CAN. 1004290.
3,831,553.—WICK FOR OIL DISPENSING APPARATUS. AUG. 27, 1974. CAN. 0984895.
3,852,861.—SURFACES WITH FLUOROCARBON PROCESS FOR MULTIPLE COATING RESINS. DEC. 10, 1974. ARG. 0199302, ATR. 0335842, AUS. 0165141, BEL. 0789728, CAN. 0990149, GRB. 1410025, NZL. 0168554, SAF. 0727133, STZ. 0028514.
3,861,860.—DRY FUSER ROLL CLEANING APPARATUS. JAN. 21, 1975.
3,881,085.—FUSER CONTROL CIRCUIT FOR COPYING APPARATUS. APR. 29, 1975. BEL. 0808310, GRB. 1447679.
3,883,291.—OIL APPLICATOR FOR REPRODUCTION MACHINE FUSER. MAY 13, 1975. BEL. 0822048, FRA. 7438048, SPN. 0432090.
3,883,292.—SLEEVELESS PRESSURE ROLL CLEANER. MAY 13, 1975.
3,883,293.—PRESSURE ROLL CONSTRUCTION. MAY 13, 1975.
3,902,845.—METAL FOAM UNDER CONFORMABLE SURFACE REPLACEABLE. SEPT. 2, 1975.
3,906,800.—REUSABLE NIP MEASURING DEVICE AND METHOD. SEPT. 23, 1975.
3,907,493.—VISCO-ELASTIC DAMPENER MECHANISM FOR FUSER ASSEMBLY. SEPT. 23, 1975.
3,908,589.—STRUCTURE FOR APPLYING RELEASE AGENT TO A HEATED FUSER ROLL STRUCTURE. SEPT. 30, 1975.
3,912,901.—PFA TEFLON SLEEVED CHOW PRESSURE ROLL. OCT. 14, 1975.
3,913,521.—COMPOSITE DOCTORING BLADE FOR A HEATED FUSER ROLL UTILIZED FOR FIXING TONER. OCT. 21, 1975.
3,918,397.—CONTACT FUSING APP FOR FIXING TONER IMAGES TO A SUPPORT MEMBER. NOV. 11, 1975.
3,918,804.—APP FOR APPLYING RELEASE MATERIAL TO A CONTACT FUSER ROLL MEMBER UTILIZED IN FIXNG TNR IMGS TO. NOV. 11, 1975.
3,921,573.—CLEANING SYSTEM FOR ELECTROSTATIC REPRODUCING APPARATUS. NOV. 25, 1975.
3,924,564.—FUSER APPARATUS HAVING AN ARTICULATED RELEASE MATERIAL DISPENSER. DEC. 9, 1975.
3,926,058.—CONTACT ARC REPLICATION DEVICE. DEC. 16, 1975.
3,929,094.—ROLL FUSER. DEC. 30, 1975.
3,929,095.—ROLL FUSER. DEC. 30, 1975.
3,929,096.—ROLL FUSER. DEC. 30, 1975.
3,934,113.—ROLL FUSER APPARATUS AND MOUNTING ARRANGEMENT THEREFOR. JAN. 20, 1976.
3,934,547.—RENEWABLE CHOW FUSER COATING. JAN. 27, 1976.
3,935,836.—METERING BLADE FOR A FUSER ROLL. FEB. 3, 1976.
3,938,950.—STRIPPING APPARATUS. FEB. 17, 1976.
3,940,238.—CLEANING STRUCTURE FOR AN ELASTOMERIC FUSER MEMBER. FEB. 24, 1976.
3,940,518.—BAKE TECHNIQUE FOR MANUFACTURING TETRAFLUOROETHYLENE COATED ROLLS. FEB. 24, 1976. GRB. 1452718.
3,941,558.—A CONTACT AND HEATING FIXING DEVICE FOR ELECTROPHOTOGRAPHY. MAR. 2, 1976.
3,942,887.—DRIVE MECHANISM FOR A ROLL FUSER EMPLOYED IN A COPIER APPARATUS. MAR. 9, 1976.
3,948,214.—INSTANT START FUSING APPARATUS. APR. 6, 1976.

3,951,538.—A PERMANENTLY NIPPED CONTACT IMAGE FUSER SYSTEM INCORPORATING A ONE-WAY CLUTCH. APR. 20, 1976.
3,955,916.—FUSER ROLL SHEET STRIPPING APPARATUS. MAY 11, 1976.
3,965,331.—DUAL MODE ROLL FUSER. JUNE 22, 1976.
3,965,332.—SELECTIVE FUSING APPARATUS. JUNE 22, 1976.
3,965,853.—CONTACT FUSER ASSEMBLY. JUNE 29, 1976.
3,965,973.—TEMPERATURE SENSING DEVICE. JUNE 29, 1976.
3,966,394.—PLURAL CLEANING ROLLS ASSEMBLY. JUNE 29, 1976.
3,968,343.—FUSER ROLL TEMPERATURE REGULATOR PROBE. JULY 6, 1976.
3,970,038.—ROLL FUSER. JULY 20, 1976.
3,973,844.—LATCHING MECHANISM FOR THE BACK-UP ROLL OF A ROLL FUSER EMPLOYED IN A COPIER APPARATUS. AUG. 10, 1976.
3,976,370.—BELT TRANSFER AND FUSING SYSTEM. AUG. 24, 1976.
3,980,423.—FUSER CLEANING ROLLER ASSEMBLY. SEPT. 14, 1976.
3,981,085.—AIR STRIPPING DEVICE FOR ELASTOMERIC SURFACE. SEPT. 21, 1976.
3,989,005.—IMPROVED OIL METERING BLADE DEVICE. NOV. 2, 1976.
3,993,124.—METH&APPRTS FOR SUSR ASSMBLY CLING IN ELCTROSTATOGRPC MACHNE-GAMMA METH&APPRTS FOR FUSER END CO. NOV. 23, 1976. BEL. 0793560, FRA. 7246728, ITL. 0973322, SWD. 7216976.
3,996,886.—IMPROVED OIL METERING BLADE HOLDER ASSEMBLY. DEC. 14, 1976.
3,996,887.—IMPROVED OIL METERING BLADE HOLDING DEVICE. DEC. 14, 1976.
3,999,510.—HIGH SURFACE ENERGY CLEANING ROLL. DEC. 28, 1976.
4,000,394.—FUSER THERMAL DETECTOR. DEC. 28, 1976.
4,000,957.—CONTACT FUSER AND RELEASE AGENT APPLICATOR THEREFOR. JAN. 4, 1977.
4,000,963.—CLEANING APPARATUS FOR A HEAT & PRESSURE FUSER. JAN. 4, 1977.
4,004,549.—ROLL FUSER. JAN. 25, 1977.
4,008,955.—FUSER ASSEMBLY FOR AN ELECTROPHOTOGRAPHIC COPYING MACHINE. FEB. 22, 1977.
4,011,831.—IMPROVED OIL METERING BLADE LOADING ASSEMBLY. MAR. 15, 1977.
4,013,400.—CLEANING APPARATUS FOR A HEAT & PRESSURE FUSER. MAR. 22, 1977.
4,018,555.—CLEANING APPARATUS FOR ROLL FUSER. APR. 19, 1977.
4,025,751.—FUSER ROLL SLEEVE. MAY 24, 1977.
4,026,238.—APP FOR APPLYING RELEASE MATERIAL TO A CONTACT FUSER ROLL MEMBER UTILIZED IN FIXING TONER IMAGE. MAY 31, 1977.
4,028,050—STRIPPER FINGER COMBINATION MOUNTING MEANS THEREFOR. JUNE 7, 1977.
4,034,188.—HEAT FIXING DEVICE FOR COPYING MACHINE. JULY 5, 1977.
4,034,706.—DUAL RELEASE AGENT CU-VITON FUSER. JULY 12, 1977.
4,042,804.—ROLL FUSER APPARATUS. AUG. 16, 1977.
4,043,747.—PRESSURE HEAT FIXING DEVICE. AUG. 23, 1977.
4,045,163.—HEATED FUSER RELEASE AGENT CONTAINER. AUG. 30, 1977.
4,045,164.—USE OF SILICONE OIL AS A POLYETHYLENE OXIDATION RETARDANT IN A TONER IMAGE FUSING APPARATUS. AUG. 30, 1977. GRB. 1498469
4,047,885.—ROTATING WICK OIL DISPENSING SYSTEM. SEPT. 13, 1977.
4,050,801.—RELEASE AGENT APPLICATION SYSTEM FOR A HEATED FUSER ROLL. SEPT. 27, 1977.
4,050,803.—QUICK RELEASE MECHANISM FOR A BACKUP ROLL FUSER EMPLOYED IN A COPIER APPARATUS. SEPT. 27, 1977.
4,050,886.—ROLL FUSER. SEPT. 27, 1977. BEL. 858880.
4,052,150.—OIL WETTED FUSER ROLL STRIPPING APPARATUS. OCT. 4, 1977.
4,062,534.—STRIPPER ARRANGEMENT FOR REMOVING VARIOUS SIZED COPY SHEETS FROM FUSER ROLL. DEC. 13, 1977.
4,064,313.—HEAT FIXING MEMBER FOR ELECTROPHOTOGRAPHIC COPIERS. DEC. 20, 1977.
4,071,735.—EXTERNALLY HEATED LOW-POWER ROLL FUSER. JAN. 31, 1978.
4,075,707.—PROGRAMMED DEVICE CONTROLLER. FEB. 21, 1978.
4,079,227.—CONTACT HEAT FIXING APPARATUS FOR ELECTROPHOTOGRAPHIC REPRODUCTION MACHINES. MAR. 14, 1978.
4,079,228.—PRESSURIZED SOLVENT FUSING. MAR. 14, 1978.
4,079,229.—CONTACTING AND FIXING HEATING APPARATUS. MAR. 14, 1978.
4,080,159.—TILTING PAD STRIPPER FINGER. MAR. 21, 1978.
4,081,213.—FUSER DRIVE SYSTEM. MAR. 28, 1978.
4,082,137.—METHOD AND APPARATUS FOR FUSER ASSEMBLY COOLING AN ELECTROSTATOGRAPHIC MACHINE. APR. 4, 1978. BEL. 793560, CAN. 1025515, FRA. 7246728, GRB. 1418306, ITL. 973322, SWD. 7216976.
4,083,092.—SLEEVED ORGANIC RUBBER PRESSSURE ROLLS. APR. 11, 1978.
4,083,322.—FUSER WICK. APR. 11, 1978.
4,085,794.—METHOD AND APPARATUS FOR FUSER ASSEMBLY COOLING IN AN ELECTROSTATOGRAPHIC MACHINE. APR. 25, 1978. BEL. 793560, CAN. 1025515, FRA. 7246728, GRB. 1418306, ITL. 973322, SWD. 7216976.
4,087,676.—FIXING APPARATUS WITH HEAT AND PRESSURE FOR ELECTROPHOTOGRAPHIC COPIERS. MAY 2, 1978.
4,101,267.—ROLL FUSER CLEANING SYSTEM. JULY 18, 1978. BEL. 846861, FRA. 7630971.
4,114,021.—HEAT ROLL FIXING DEVICE FOR ELECTROPHOTOGRAPHIC COPYING MACHINE. SEPT. 12, 1978.
4,119,831.—CONTACT PRESSURE ADJUSTING DEVICE IN HEATING PRESSING FIXING APPARATUS FOR ELECTROPHOTOGRAPHIC. OCT. 10, 1978.
4,149,797.—SLEEVED ORGANIC RUBBER PRESSURE ROLLS. APR. 17, 1979.
4,156,524.—ROLL FUSER STRIPPING MECHANISM. MAY 29, 1979.
4,207,057.—FIXING DEVICE FOR USE IN ELECTROPHOTOGRAPHIC COPYING MACHINE. JUNE 10, 1980.
4,214,549.—ROLL FUSER APPARATUS AND RELEASE AGENT METERING SYSTEM THEREFOR. JULY 29, 1980.
4,223,203.—COMFORMABLE/NON-COMFORMABLE ROLL FUSER. SEPT. 16, 1980.
4,254,732.—ROLL FUSER APPARATUS AND RELEASE AGENT METERING SYSTEM THEREFOR. MAR. 10, 1981.
4,258,648.—TAPERED DONOR ROLL APPLICATOR FOR ROLL FUSER. MAR. 31, 1981. BEL. 875125.
4,280,443.—ROLL FUSER LOADING SYSTEM. JULY 28, 1981.

Class 8A 3

3,180,971.—XEROGRAPHIC FUSING APPARATUS. APR. 27, 1965. CAN. 0734734, GRB. 1027904, JAP. 0524355.
3,219,799.—XEROGRAPHIC FUSING APPARATUS. NOV. 23, 1965.
3,604,892.—FUSING APPARATUS. SEPT. 14, 1971.
3,856,460.—DEVELOPING SYSTEM FOR FILM BY ADIABACTIC HEAT FLOW. DEC. 24, 1974.

Class 8B

3,215,116.—VAPOR FUSING APPARATUS. NOV. 2, 1965.
3,704,524.—APPARATUS FOR DEVELOPING LATENT ELECTROSTATIC IMAGES. DEC. 5, 1972. ARG. 0188616, BEL. 0779806, CAN. 0950655, FRA. 7208101, GRB. 1385328, MEX. 0126261.
3,884,690.—POLYESTER PHOTOCONDUCTORS AND MATRIX MATERIALS. MAY 20, 1975.
3,884,825.—IMAGING COMPOSITION. MAY 20, 1975. AUS. 0467835, BEL. 0802879, CAN. 0995963, FRA. 7328589, GRB. 1437041, ITL. 0991465, SPN. 0417382.
3,934,546.—APPARATUS FOR FIXING WITH SOLVENT VAPORS. JAN. 27, 1976.
3,940,518.—BAKE TECHNIQUE FOR MANUFACTURING TETRAFLUOROETHYLENE COATED ROLLS. FEB. 24, 1976. GRB. 1452718.

Class 8B 1

3,199,223.—XEROGRAPHIC FUSING AND DRYING APPARATUS. AUG. 10, 1965.
3,288,624.—VAPOR FUSING METHOD FOR XEROGRAPHIC POWDER IMAGES. NOV. 29, 1966.

Class 8C

3,386,822.—SOLVENT CAPSULE FIXING OF POWDER IMAGES. JUNE 4, 1968. CAN. 0712993, FRA. 1430471,

GER. 1497196, GRB. 1087201, HOL. 0132775, ITL. 0745341, JAP. 0741995.

3,893,760.—TRANSFER APPARATUS. JULY 8, 1975.

3,926,824.—ELECTROSTATOGRAPHIC DEVELOPER COMPOSITION. DEC. 16, 1975. ARG. 0192480, AUS. 0466319, BEL. 0793098, CAN. 0985552, FRA. 7245403, GRB. 1417179, ITL. 0973327, SPN. 0410171, STZ. 0028663, SWD. 7216977.

3,940,235.—IMMERSIONS FUSING. FEB. 24, 1976.

3,965,855.—IMMERSION FUSING. JUNE 29, 1976.

4,063,530.—IMAGE FIXING. DEC. 20, 1977.

4,072,521.—AMIDES OF W AND CIS ALKENOIC ACIDS IN IMAGING PROCESS AND ELEMENT. FEB. 7, 1978.

4,073,649.—DI CARBOXYLIC ACID BIS AMIDES AND IMPROVED IMAGING PROCESS. FEB. 14, 1978.

4,076,641.—W- AND CIS ALKENOIC ACID AMIDES IN ELECTROSTATOGRAPHIC DEVELOPERS. FEB. 28, 1978.

4,099,968.—DICARBOXYLIC ACID BIS-AMIDES IN ELECTROSTATIC IMAGING COMPOSITIONS AND PROCESSES. NOV. 11, 1978.

Class 8D

3,493,412.—TRANSFERRING XEROGRAPHIC TONER IMAGES TO A SOLID CRYSTALLINE PLASTICIZER COATED RECEIVING SURFA. FEB. 3, 1970. CAN. 0880837, MEX. 0096609.

3,640,746.—ADHESIVE CONTACT ELECTRIFICATION IMAGING. FEB. 8, 1972.

3,861,911.—IMAGING FIXING METHOD. JAN. 21, 1975.

Class 8E

3,591,276.—METHOD AND APPARATUS FOR OFFSET XEROGRAPHIC REPRODUCTION. JULY 6, 1971. CAN. 0894931, GER. 1811893, GRB. 1245426, JAP. 0648075.

3,799,827.—PROCESS FOR PROTECTING THE SURFACE OF AN IMAGE. MAR. 26, 1974.

3,816,066.—XEROGRAPHIC FIXING DEVICE. JUNE 11, 1974.

3,861,219.—METHOD FOR MEASURING HEAT AND PRESSURE CHARACTERISTICS OF FUSING APP. JAN. 21, 1975. CAN. 1013807.

3,888,622.—TEMPERATURE SENSING DEVICE. JUNE 10, 1975.

3,928,656.—METHOD OF DEVELOPING ELECTROSTATIC LATENT IMAGES WITH PRESSURE SENSITIVE TONER. DEC. 23, 1975. ARG. 0196320, AUS. 0464392, BEL. 0793554, CAN. 1011149, FRA. 7246575, GRB. 1417409, ITL. 0973325, SPN. 0410211, STZ. 0028568.

3,934,477.—TEMPERATURE SENSING DEVICE. JAN. 27, 1976.

3,936,658.—FUSER APPARATUS FOR ELECTROSTATIC REPRODUCING MACHINES. FEB. 3, 1976. BEL. 0844831.

4,055,143.—RELEASE MATERIAL APPLICATION SEAL. OCT. 25, 1977.

Class 9

3,836,244.—COLOR XEROGRAPHY. SEPT. 17, 1974.

3,958,878.—ELECTROSTATIC PROCESSOR HOUSING INTERCHANGABLE RESERVOIRS FOR SUPPING AND RECLAIMING TONER. MAY 25, 1976.

3,980,494.—METHOD OF REDUCING FRICTION IN BLADE CLEANING OF IMAGING SURFACES. SEPT. 14, 1976.

3,983,841.—TONER RECLAIM CONVEYOR. OCT. 5, 1976.

4,093,369.—CLEANING SYSTEM. JUNE 6, 1978.

Class 9A

RE29818.—TONER-RECLAIMING SYSTEM-REISSUE OF PATENT 3,641,979 ISSUED FEB. 15, 1972. OCT. 31, 1978. CAN. 913351.

T.940,022.—PRESSURIZED AND FILTERED XEROGRAPHIC SYSTEM. NOV. 4, 1975.

3,552,850.—LUBRICATED BLADE CLEANING OF IMAGING PHOTOCONDUCTIVE MEMBERS. JAN. 5, 1971. ALB. 0003931, ARG. 0172544, ATR. 0300568, AUS. 0438884, BEL. 0727561, BRA. 6898275, BUR. 0000041, CAM. 0000453, CAN. 0869669, CHL. 0024409, CLB. 0017926, COR. 000947A, DNK. 0122738, EGR. 0075946, EIR. 0032784, FRA. 6902175, GNR. 0000043, GRB. 1259513, GRK. 0039239, IND. 0119582, ISR. 0031502, ITL. 0854622, LIB. P272693, LXB. 0057856, MEX. 0106799, MLG. 0003059, MLW. 00MW769, MNC. 8146975, MRC. 0014725, NOR. 0128683, NZL. 0155207, PAK. 0120897, PLD. 0017650, PLP. 0006639, PNM. 0001979, PRU. 0009588, PTG. 0051062, RHD. 5569489, SAF. 6970696, SPN. 0363130, STZ. 0493016, SWD. 0346398, TGR. 0000550, URG. 0009736, USR. 0385466, VTM. 0001840, VZL. 0023692, ZMB. 0176973.

3,635,704.—IMAGING SYSTEM. JAN. 18, 1972. ALB. 0004133, ARG. 0176978, ATR. 0303521, AUS. 0440759, BEL. 0727560, BRA. 0088093, BUR. 0000042, CAM. 0000463, CAN. 0867697, CHL. 0026254, COR. 000949A, DNK. 0131403, EGR. 0078899, EIR. 0032632, FRA. 6902174, GNR. 0000042, GRB. 1259514, GRK. 0039240, IND. 0119583, ISR. 0031503, ITL. 0871510, LAS. 0000199, LIB. 00P7269, LXB. 0057849, MEX. 0106332, MLG. 0003056, MLW. 00MW869, MNC. 8156975, MRC. 0014724, NZL. 0155208, PAK. 0120859, PLP. 0008511, PNM. 0001676, PRU. 0010443, PTG. 0051063, RHD. 4169529, RMN. 0055464, SAF. 0069995, SPN. 0363127, STZ. 0513431, SWD. 0342921, SYA. 0002477, TGR. 0000551, TIW. 0005257, UAR. 0009525, USR. 0396887, VTM. 0001805, VZL. 0023744, ZMB. 0186974.

3,717,409.—CLEANING OF ELECTROSTATOGRAPHIC SURFACES. FEB. 20, 1973.

3,724,019.—WIPER BLADE CLEANING APPARATUS FOR XEROGRAPHIC MACHINES. APR. 3, 1973. CAN. 991248.

3,724,020.—WIPER BLADE CLEANER FOR XEROGRAPHIC MACHINES. APR. 3, 1973. ARG. 0194951, BEL. 0783490, CAN. 0991249, FRA. 7216778, GER. 2220821, GRB. 1399156, ITL. 0955404, MEX. 0127875.

3,838,472.—TONER CLEANING APPARATUS. OCT. 1, 1974. BEL. 0789325, CAN. 0991694, FRA. 7233424, GER. 2239441, GRB. 1403439, ITL. 0967797, SWD. 7212456.

3,847,480.—CONTINOUS BLADE CLEANER. NOV. 12, 1974.

3,848,992.—DEVELOPER BLADE CLEANING. NOV. 19, 1974. FRA. 7415394, GRB. 1443128, ITL. 0010212.

3,848,993.—SUPPORTED DEVELOPER BLADE CLEANING. NOV. 19, 1974.

3,848,994.—LINE CHARGE TONER CLEANING. NOV. 19, 1974.

3,854,814.—TRANSLATING DWELL CLEANING SYSTEM. DEC. 17, 1974.

3,871,762.—BLADE CLEANING SYSTEM. MAR. 18, 1975.

3,918,807.—CLEANING BLADE FOR PHOTOCOPIER. NOV. 11, 1975.

3,918,809.—APPARATUS FOR CLEANING A SURFACE SUPPORT. NOV. 11, 1975.

3,927,937.—CLEANING ASSEMBLY FOR AN ELECTROSTATOGRAPHIC DEVICE. DEC. 23, 1975. SPN. 0420425.

3,940,282.—BLADE CLEANING OF SURFACE WITH REVERSE MOVEMENT. FEB. 24, 1976.

3,947,108.—CLEANING SYSTEM. MAR. 30, 1976.

3,950,092.—CLEANING TRANSPORTING & SORTING APPARATUS & REPRODUCING MACHINE. APR. 13, 1976.

3,957,509.—METHOD AND APPARATUS FOR REMOVING CONTAMINANTS FROM AN ELECTROSTATIC IMAGING SURFACE. MAY 18, 1976.

3,973,845.—METHOD OF REDUCING FRICTION IN BLADE CLEANING OF IMAGING SURFACES. AUG. 10, 1976.

3,977,898.—METHOD FOR CLEANING A SURFACE SUPPORT. AUG. 31, 1976. GRB. 1438660.

3,992,091.—ROUGHENED IMAGING SURFACE FOR CLEANING. NOV. 16, 1976.

4,002,570.—ELECTROPHOTOGRAPHIC DEVELOPER WITH POLYVINYLIDENE FLUORIDE ADDITIVE. JAN. 11, 1977.

4,007,982.—METHOD AND APPARATUS FOR ULTRASONICALLY CLEANING A PHOTOCONDUCTIVE SURFACE. FEB. 15, 1977.

4,030,824.—A REPRODUCING APPARATUS HAVING AN IMPROVED IMAGING SURFACE CLEANING SYSTEM. JUNE 21, 1977.

4,042,415.—METHOD FOR SCRAPING LIQUIDS FROM A MOVING SURFACE. AUG. 16, 1977.

4,043,659.—CLEANING BLADE TONER ARRESTOR. AUG. 23, 1977.

4,051,536.—ELECTRONIC HALFTONE IMAGING SYSTEM. SEPT. 27, 1977.

4,054,381.—TONER FILTER ARRANGEMENT. OCT. 18, 1977.

4,083,633.—BLADE CLEANING HOLDER. APR. 11, 1978.

4,111,545.—VIBRATING BLADE CLEANER. SEPT. 5, 1978.

4,123,154.—COMBINED CORONA GENERATOR AND IMAGING SURFACE CLEANER. OCT. 31, 1978.

4,131,359.—SENSITIVE MEDIUM CLEANER FOR USE IN ELECTROPHOTOGRAPHIC COPYING MACHINE. DEC. 26, 1978.

4,145,137.—ELECTROPHOTOGRAPHIC REPRODUCING MACHINE BLADE CLEANING APPARATUS. MAR. 20, 1979.

4,158,498.—BLADE DEVELOPING SYSTEM FOR A REPRODUCING APPARATUS. JUNE 19, 1979.

4,174,172.—CLEANING METHODS AND APPARATUS FOR A PHOTOCOPYING DEVICE. NOV. 13, 1979. GRB. 1511199.

4,230,406.—CLEANING SYSTEM FOR AN ELECTROSTATIC COPIER. OCT. 28, 1980.

4,264,191.—ELECTROPHOTOGRAPHIC IMAGING SYSTEM INCLUDING A LAMINATED CLEANING AND/OR DOCTOR BLADE. APR. 28, 1981.

Class 9A 1

3,186,838.—XEROGRAPHIC PLATE CLEANING METHOD UTILIZING THE RELATIVE MOVEMENT OF A CLEANING WEB. JUNE 1, 1965. CAN. 0858757, FRA. 1435510, GER. 1497242, GRB. 1094224, ITL. 0761145.

3,190,198.—XEROGRAPHIC CLEANING APPARATUS. JUNE 22, 1965.

3,337,891.—PLATE CLEANING AND TRANSPORTING APPARATUS. AUG. 29, 1967.

3,380,355.—XEROGRAPHIC CLEANING APPARATUS. APR. 30, 1968. CAN. 0819048.

3,405,682.—XEROGRAPHIC DEVELOPMENT APPTS WITH WEB LOADING MEANS TO REMOVE RESIDUAL DEVELOPER. OCT. 15, 1968. GRB. 1102282.

3,492,732.—WEB QUANTITY INDICATOR. FEB. 3, 1970. CAN. 0887178.

3,526,457.—CLEANING APPARATUS FOR ELECTROSTATIC COPYING MACHINES. SEPT. 1, 1970. CAN. 0880402, GRB. 1225287.

3,615,397.—METHOD OF CLEANING ELECTROSTATIC COPYING MACHINES. OCT. 26, 1971.

3,624,858.—CLEANING APPARATUS. DEC. 7, 1971.

3,664,300.—APPARATUS FOR TREATING THE SURFACE OF AN ELECTROSTATOGRAPHIC IMAGING PLATE. MAY 23, 1972.

3,725,059.—METHOD OF CLEANING AN ELECTROSTATOGRAPHIC SURFACE. APR. 3, 1973. GRB. 1337282.

3,781,107.—CLEANING APPARATUS. DEC. 25, 1973.

3,867,170.—METHOD FOR CLEANING LIQUID DEVELOPERS. FEB. 18, 1975. CAN. 0906336, GRB. 1339904.

3,879,785.—CLEANING APPARATUS. APR. 29, 1975.

4,007,983.—IMPROVED LIQUID DEVELOPER CLEANING MEANS. FEB. 15, 1977.

4,089,683.—LIQUID DEVELOPER CLEANING MEANS. MAY 16, 1978.

4,110,035.—CLEANING SYSTEM FOR AN ELECTROPHOTOGRAPHIC PRINTING MACHINE. AUG. 29, 1978.

Class 9A 2

3,477,450.—BRUSH RECLAIMING. NOV. 11, 1969. GRB. 1206539.

3,489,463.—BRUSH SIZING APPARATUS. JAN. 13, 1970. GRB. 1243233, JAP. 0810578.

3,493,269.—LOADING HEAD. FEB. 3, 1970. CAN. 0864392.

3,610,693.—METHOD OF MAKING A CYLINDRICAL BRUSH. OCT. 5, 1971. CAN. 0944415, GRB. 1332920, JAP. 0758464.

3,617,123.—XEROGRAPHIC CLEANING APPARATUS. NOV. 2, 1971.

3,634,077.—METHOD AND APPARATUS FOR REMOVING A RESIDUAL IMAGE IN AN ELECTROSTATIC COPYING SYSTEM. JAN. 11, 1972. BEL. 0737956, CAN. 0896611, FRA. 6929217, GRB. 1259960, ITL. 0870232, JAP. 0742513.

3,664,300.—APPARATUS FOR TREATING THE SURFACE OF AN ELECTROSTATOGRAPHIC IMAGING PLATE. MAY 23, 1972.

3,766,593.—CLEANING APPARATUS FOR INSULATING SURFACES. OCT. 23, 1973. ARG. 0194956, AUS. 0460978, BEL. 0784898, CAN. 0990017, FRA. 7219012, GRB. 1399900, ITL. 0960138, MEX. 0127720. SPN. 404266, STZ. 0538310, SWD. 7208414, VZL. 0032065.

3,947,108.—CLEANING SYSTEM. MAR. 30, 1976.

3,957,509.—METHOD AND APPARATUS FOR REMOVING CONTAMINANTS FROM AN ELECTROSTATIC IMAGING SURFACE. MAY 18, 1976.

4,025,188.—PHOTOACTIVE DEVICE FOR XEROGRAPHY. MAY 24, 1977.

4,113,376.—CLEANING APPARATUS FOR REPRODUCING MACHINE. SEPT. 12, 1978.

4,134,673.—DUAL BRUSH CLEANING APPARATUS. JAN. 16, 1979.

4,205,911.—A CLEANING SYSTEM. JUNE 3, 1980.

Class 9A 2A

3,278,972.—XEROGRAPHIC PLATE CLEANING APPARATUS. OCT. 18, 1966. CAN. 0774795, FRA. 1458646, GER. 1497218, GRB. 1122624, ITL. 0729648, JAP. 0512649.

3,534,427.—CLEANING APPARATUS FOR ELECTROSTATIC PRINTING MACHINES. OCT. 20, 1970. AUS. 0425369, BEL. 0729977, CAN. 0873426, CZC. 0157666, FRA. 6907700, GRB. 1238117, HUN. 0158312, ITL. 0876795, JAP. 0645593, SPN. 0364889, SWD. 0345533, USR. 0372853.

3,590,412.—BRUSH CLEANING DEVICE FOR ELECTROSTATIC MACHINES. JULY 6, 1971. CAN. 0930107, GRB. 1248521, JAP. 0832526.

3,660,863.—CLEANING APPARATUS. MAY 9, 1972. ARG. 0188292, ATR. 0324838, AUS. 0445312, BEL. 0752937, CAN. 0925659, CHL. 0027132, DNK. 0129483, EGR. 0084130, FRA. 7024664, GRB. 1259446, GUA. 0002676, IND. 0127312, ITL. 0900201, MEX. 0115163, NOR. 0133164, NZL. 0160666, PLD. 0081341, PLP. 0007492, PNM. 0002014, PTG. 0054074, SAF. 0704533, SPN. 0381388, STZ. 0514165, SWD. 0359942, TIW. 0007784, USR. 0384250, VZL. 0032417.

3,692,402.—MATERIALS FOR FIBROUS DEVELOPMENT AND CLEANING MEMBER. SEPT. 19, 1972.

3,740,789.—XEROGRAPHIC ROLLER OSCILLATING CLEANING BLADE WITH DRIVE MECHANISM THEREFOR. JUNE 26, 1973. BEL. 0789327, CAN. 0991250, FRA. 7233724, GER. 2243491, GRB. 1403440, ITL. 0967796, SWD. 7212455.

3,742,551.—TONER CLEANING AND STORAGE APPARATUS. JULY 3, 1973. BEL. 0789325, CAN. 0991694, FRA. 7233424, GER. 2239441, GRB. 1403439, ITL. 0967797, SWD. 7212456.

3,788,454.—CHAIN BEAD DRIVE APPARATUS. JAN. 29, 1974. GRB. 1430379.

3,795,025.—ELECTROPHOTOGRAPHIC PHOTORECEPTOR CLEANING APPARATUS. MAR. 5, 1974.

3,807,853.—ELECTROPHOTOGRAPHIC CLEANING APPARATUS. APR. 30, 1974. GRB. 1439229.

4,032,228.—FOREIGN OBJECT DETECTOR BRUSH CLEANER. JUNE 28, 1977.

4,252,435.—IMPROVED CLEANING SUBSYSTEM FOR A XEROGRAPHIC REPRODUCING MACHINE. FEB. 24, 1981.

Class 9A 2B

3,404,418.—SHEET TRANSPORT APPARATUS. OCT. 8, 1968. CAN. 0859327.

3,572,923.—CLEANING METHOD AND APPARATUS FOR ELECTROSTATIC COPYING MACHINES. MAR. 30, 1971. ARG. 0172603, AUS. 0429490, BEL. 0737957, CAN. 0884822, FRA. 6929174, GRB. 1259890, ITL. 0870233, JAP. 0819708, MEX. 0113040, SPN. 0370878, SWD. 0348851.

3,655,373.—CLEANING METHOD FOR ELECTROSTATIC COPYING MACHINE. APR. 11, 1972.

3,668,008.—IONIZED AIR CLEANING DEVICE. JUNE 6, 1972. CAN. 0956406, GRB. 1310836.

3,722,018.—CLEANING APPARATUS. MAR. 27, 1973.

3,738,745.—FUR BRUSH ERASER. JUNE 12, 1973. CAN. 0970554, GRB. 1418036.

4,123,154.—COMBINED CORONA GENERATOR AND IMAGING SURFACE CLEANER. OCT. 31, 1978.

4,252,433.—METHOD & APPARATUS FOR REMOVING A RESIDUAL IMAGE IN AN ELECTROSTATIC COPYING SYSTEM. FEB. 24, 1981.

Class 9A 2B 1

3,128,683.—XEROGRAPHIC APPARATUS. APR. 14, 1964.

Class 9A 2C

3,252,274.—XEROGRAPHIC POWDER FILTER. MAY 24, 1966. CAN. 0712876, GER. 1278245, GRB. 1031634, JAP. 0502993.

3,410,060.—XEROGRAPHIC FILTER APPARATUS. NOV. 12, 1968. CAN. 0810976, FRA. 1458648, GRB. 1114505, ITL. 0729638, JAP. 0724232.

3,570,224.—FILTER FOR ELECTROSTATOGRAPHIC DEVELOPER. MAR. 16, 1971.

3,641,979.—TONER RECLAIMING SYSTEM. FEB. 15, 1972. CAN. 0913351.

3,793,986.—TONER RECLAIMING SYSTEM FOR ELECTROSTATIC PRINTING MACHINES. FEB. 26, 1974. ARG. 0194370, AUS. 0464194, BEL. 0784636, GER. 0978341, GRB. 1373721, ITL. 0956416, MEX. 0128265, SPN. 403.704, STZ. 0546970, VZL. 0033339.

3,816,157.—TONER RECLAIMING METHOD. JUNE 11, 1974.

4,046,682.—TONER RECLAIMING SYSTEM. SEPT. 6, 1977. CAN. 1030209.

Class 9B

3,332,328.—XEROGRAPHIC DEVELOPER SEAL AND PROCESS. JULY 25, 1967. CAN. 0792684, GRB. 1138394, JAP. 0512658, MEX. 0091318.
3,607,160.—LIGRCIN CONTAINING PUMICING COMPOSITION. SEPT. 21, 1971.
3,610,749.—IMAGING SYSTEM. OCT. 5, 1971. CAN. 0923541, GRB. 1339905, JAP. 0745767.
3,646,910.—DEVELOPMENT APPARATUS FOR LATENT ELECTROSTATIC IMAGES. MAR. 7, 1972.
3,668,008.—IONIZED AIR CLEANING DEVICE. JUNE 6, 1972. CAN. 0956406, GRB. 1310836.
3,697,263.—METHOD OF CLEANING RESIDUAL LIQUID DEVELOPER FROM ELECTROPHOTOGRAPHIC PLATES. OCT. 10, 1972. ARG. 0181940, AUS. 0455091, BEL. 0758060, CAN. 0906334, EGR. 0087483, FRA. 7041623, GRB. 1328406, ITL. 0916264, JAP. 0749381, MEX. 0116862, SPN. 0385000, STZ. 0519186, SWD. 0365624, TIW. 0006850, USR. 0349206, VZL. 0032211.
3,834,804.—COPYING MACHINE WITH MEANS FOR MOUNTING CARRIER BEAD PICKOFF ROLLER THEREIN. SEPT. 10, 1974.
4,026,701.—GAS IMPINGMENT & SUCTION CLEANING APPARATUS. MAY 31, 1977.
4,111,546.—ULTRASONIC CLEANING APPARATUS FOR AN ELECTROSTATOGRAPHIC REPRODUCING MACHINE. SEPT. 5, 1978.
4,121,947.—METHOD OF CLEANING A PHOTORECEPTOR. OCT. 24, 1978.

Class 9B 1

3,920,329.—BACKGROUND REMOVAL APPARATUS. NOV. 18, 1975.
4,108,546.—CLEANING APPARATUS AND ELECTROSTATORAPHIC REPRODUCING MACHINE. AUG. 22, 1978.
4,116,555.—BACKGROUND REMOVAL APPARATUS. SEPT. 26, 1978.
4,127,327.—APPARATUSES INCORPORATING A COMPOSITE SUPPORT MEMBER. NOV. 28, 1978.
4,279,499.—ELECTROPHOTOGRAPHIC CLEANING APPARATUS. JULY 21, 1981.

Class 9B 2

RE.28,566.—CLEANING APPARATUS. OCT. 7, 1975. CAN. 0913310, MEX. 0113698.
3,424,615.—METHOD AND APPARATUS FOR CLEANING XEROGRAPHIC PLATES. JAN. 28, 1969. ÇAN. 0842022, GRB. 1158521, JAP. 0561239.
3,580,673.—CLEANING APPARATUS-REISSUED AS RE28566-D2266R. MAY 25, 1971. CAN. 0913310, MEX. 0113698.
3,615,398.—METHOD FOR ELECTROSTATIC COPYING INCLUDING AN IMPROVED PROCESS OF CLEANING PHOTOCONDUCTV SRFACE. OCT. 26, 1971.
3,625,683.—PROCESS FOR CLEANING A PHOTO-CONDUCTIVE DRUM OF RESIDUAL TONER PARTICLES AND REUSE OF THE SAME. DEC. 7, 1971. CAN. 0937800, GRB. 1329982.
3,628,950.—METHOD OF REMOVING THE RESIDUAL TONER PARTICLES FROM A PHOTOCONDUCTIVE SURFACE. DEC. 21, 1971.
3,640,707.—IMAGING SYSTEM. FEB. 8, 1972.
3,655,375.—INTERMITTENT GRIT REMOVAL PROCESS. APR. 11, 1972. CAN. 0924493, GRB. 1341404, JAP. 0746926.
3,656,948.—SELECTED REMOVAL OF LIQUID DVLPR IN CYCLICAL ELECTROPHOTOGRAPHIC PROCESS. APR. 18, 1972. CAN. 0906335, GRB. 1335054, JAP. 0760503.
3,776,631.—LIQUID DEVELOPER CLEANING SYSTEM. DEC. 4, 1973.

Class 9B 3

3,128,683.—XEROGRAPHIC APPARATUS. APR. 14, 1964.
3,483,034.—PROCESS OF CLEANING XEROGRAPHIC PLATES. DEC. 9, 1969. CAN. 0800825, FRA. 1463257, GER. 1497235, GRB. 1125594, ITL. 0750154.
3,592,678.—LIQUID DONOR DEVELOPMENT WITH ELECTROPHORETIC CLEANING. JULY 13, 1971.
3,620,800.—CLEANING LIQUID DEVELOPED ELECTROSTATIC IMAGES BY CONTACT WITH VAPORIZED CLEANING FLUID. NOV. 16, 1971. CAN. 0933997.
3,628,981.—LIQUID TONER DEVELOPMENT. DEC. 21, 1971. ARG. 0181932, MEX. 0116451.
3,671,290.—IMAGING SYSTEM. JUNE 20, 1972.
3,702,303.—CLEANING OF PHOTOCONDUCTIVE INSULATING SURFACES. NOV. 7, 1972. CAN. 0944650, GRB. 1369451.
3,762,950.—CLEANING OF PARTICLES FROM A SURFACE. OCT. 2, 1973. ARG. 0195076, AUS. 0464713, BEL. 7916681, CAN. 0974009, FRA. 7241538, GRB. 1400238, ITL. 0971072, MEX. 0128580, SPN. 0408837, STZ. 0553433, SWD. 7215089, VZL. 0032005.
3,849,171.—METHOD FOR CLEANING BACKGROUND AREAS FROM DEVELOPED RECORDING SURFACES. NOV. 19, 1974. CAN. 0941882.
3,862,801.—METHOD OF CLEANING AN ELECTROSTATOGRAPHIC IMAGING SURFACE. JAN. 28, 1975. GRB. 1337282.
3,937,665.—PHOTORECEPTOR SOLVENT CLEANER. FEB. 10, 1976.
3,979,317.—VOLATILE CLEANING SOLUTION FOR PHOTORECEPTOR. SEPT. 7, 1976.
4,054,534.—VOLATILE CLEANING SOLUTION FOR MIRRORS AND LENSES. OCT. 18, 1977.

Class 10

3,945,728.—AN ALARM FOR AN ELECTROPHOTOGRAPHIC PRINTING MACHINE. MAR. 23, 1976.
4,089,515.—DOCUMENT STORAGE AND TRANSPORT APPARATUS. MAY 16, 1978. BEL. 850379.
4,109,903.—FLUIDIC FEEDING OF DOCUMENTS TO AN EXPOSURE STATION. AUG. 29, 1978.

Class 10A

RE29,406.—DOCUMENT ORIGINAL HANDLING SYSTEM. SEPT. 20, 1977. FRA. 7442405.
D.230,085.—COPY PAPER CASSETTE. JAN. 22, 1974.
3,100,112.—DOCUMENT FEED MECHANISM. AUG. 6, 1963. GRB. 1015635, JAP. 0478676.
3,152,528.—DOCUMENT CARRIER. OCT. 13, 1964. CAN. 0707048, FRA. 1414049, GER. 1197744, GRB. 1032954, ITL. 0737307, JAP. 0471310.
3,220,275.—DOCUMENT DRIVE TRANSMISSION. NOV. 30, 1965.
3,239,215.—DOCUMENT FEED MECHANISM. MAR. 8, 1966. CAN. 0741548, GRB. 1052820, JAP. 0497188.
3,239,220.—DOCUMENT CONVEYOR. MAR. 8, 1966. CAN. 0770495, FRA. 1434188, GRB. 1094188, ITL. 0742434.
3,326,548.—CARD CONVEYING APPARATUS HAVING A ROTARY FRONT GAUGE. JUNE 20, 1967. CAN. 0793702, MEX. 0086197.
3,370,844.—CARD HANDLING-SCANNING DEVICE. FEB. 27, 1968.
3,409,356.—CONVEYOR FOR DOCUMENTS. NOV. 5, 1968. FRA. 1500227, GRB. 1162982, ITL. 0776597.
3,409,357.—APPARATUS FOR AN ELECTROSTATIC MACHINE. NOV. 5, 1968. CAN. 0816416, GRB. 1151104, JAP. 0542588.
3,419,264.—DOCUMENT HANDLING SYSTEM. DEC. 31, 1968. ARG. 0168399, CAN. 0831413, CHL. 0024536, JAM. 0002459, MEX. 0101167, PRU. 0009340, URG. 0009205, VZL. 0023735.
3,424,528.—DOCUMENT CONVEYOR UNIT. JAN. 28, 1969. CAN. 0842644, GRB. 1175596.
3,446,554.—XEROGRAPHIC REPRODUCING APPARATUS. MAY 27, 1969. ARG. 0171943, ATR. 0302040, AUS. 0451715, BEL. 0708649, CAN. 0880187, FRA. 1567148, GRB. 1223426, HUN. 0158170, ITL. 0823019, JAP. 0657008, LXB. 0055166, MEX. 0101029, NOR. 0127833, PLD. 0069795, SPN. 0348801, STZ. 0485581, SWD. 0354529, USR. 0259733, VZL. 0023685.
3,504,908.—DOCUMENT FEEDING APPARATUS CONTROL. APR. 7, 1970.
3,520,605.—DOCUMENT SCAN DRIVE AND RETURN APPARATUS. JULY 14, 1970. CAN. 0858848.
3,578,316.—DRIVING APPARATUS FOR ARTICLE FEEDERS. MAY 11, 1971. CAN. 0907653.
3,614,090.—DOCUMENT CONVEYOR. OCT. 19, 1971. ARG. 0183554, AUS. 0451766, BEL. 0751308, CAN. 0922330, EGR. 0081784, FRA. 7019911, GRB. 1311766, ITL. 0893688, MEX. 0118182, SPN. 0380271, STZ. 0512751, SWD. 0362150, TIW. 0007678, USR. 0349152, VZL. 0032780.
3,628,408.—STAMP DISPENSER. DEC. 21, 1971. CAN. 0931918, GRB. 1324699, JAP. 0755787.
3,628,786.—DOCUMENT HANDLING APPARATUS. DEC. 21, 1971. CAN. 0942552, GRB. 1329989.
3,630,515.—DOCUMENT HANDLING APPARATUS. DEC. 28, 1971.
3,630,519.—DOCUMENT FEED APPARATUS. DEC. 28, 1971. CAN. 0903779, GRB. 1329747.
3,649,447.—APPARATUS FOR DECURLING A PAPER WEB. MAR. 14, 1972. CAN. 0916185, GRB. 1288846.
3,674,363.—SHEET FEEDING APPARATUS. JULY 4, 1972. ARG. 0176106, ATR. 0307230, AUS. 0447387, BEL. 0734129, DNK. 0131336, FRA. 6919121, GRB. 1263192,

ITL. 0866189, MEX. 0112842, SPN. 0368216, STZ. 0501500, SWD. 0356136, TIW. 0006604.
3,804,514.—DUAL FUNCTION DOCUMENT STOP FOR A COPYING DEVICE. APR. 16, 1974. FRA. 7334456, GRB. 1424060.
3,846,020.—ELECTROSTATIC SHEET TRANSPORT SYSTEM. NOV. 5, 1974.
3,860,339.—COPYING MACHINE. JAN. 14, 1975.
3,861,673.—BI-DIRECTIONAL SHEET TRANSPORT. JAN. 21, 1975.
3,874,651.—REGISTRATION EDGE FOR AUTOMATIC DOCUMENT HANDLER. APR. 1, 1975. GRB. 1467791.
3,884,408.—APPARATUS FOR EJECTING A STAPLED SET OF SHEETS SIDEWISE FROM THE COLLATING BINS. MAY 20, 1975.
3,885,782.—SHEET FEEDER. MAY 27, 1975. CAN. 3885782.
3,888,581.—SEMI-AUTOMATIC DOCUMENT HANDLER. JUNE 10, 1975.
3,888,582.—SEMI-AUTOMATIC DOCUMENT HANDLER. JUNE 10, 1975.
3,888,584.—SEMI-AUTOMATIC DOCUMENT HANDLER. JUNE 10, 1975.
3,888,585.—SEMI-AUTOMATIC DOCUMENT HANDLER. JUNE 10, 1975.
3,889,943.—PLATEN TRANSPORT FOR AUTOMATIC DOCUMENT HANDLER. JUNE 17, 1975.
3,900,258.—EXPOSURE APPARATUS. AUG. 19, 1975. AUS. 0474469, CAN. 1004724, GRB. 1424242, ITL. 0993030, SPN. 0418138, SWD. 7311579.
3,901,594.—SEMI-AUTOMATIC DOCUMENT HANDLER. AUG. 26, 1975.
3,909,129.—DOCUMENT FEEDING APPARATUS. SEPT. 30, 1975.
3,915,447.—HORIZONTAL PLATEN BELT TRANSPORT. OCT. 28, 1975.
3,941,376.—AUTOMATIC DOCUMENT HANDLER-ARDRI ADH PLATEN TRANSPORT MOUNTING. MAR. 2, 1976. BEL. 0799234, CAN. 0993906, FRA. 7316540, GRB. 1421427, ITL. 0987317, SPN. 0414541.
3,941,473.—MANUAL ASSIST DOCUMENT FEEDER. MAR. 2, 1976.
3,944,365.—DOCUMENT FEEDING APPARATUS AND LATCHING MECHANISM. MAR. 16, 1976.
3,944,794.—COPYING SYSTEM CONTROL. MAR. 16, 1976. ARG. 0204710, BEL. 0808230, CAN. 1007289, FRA. 7343289, GRB. 1450707, ITL. 1002162, MEX. 0135679, SPN. 0421150, STZ. 0577391, USR. 0543364.
3,947,111.—DOCUMENT FEEDING APPARATUS. MAR. 30, 1976.
3,953,122.—DOCUMENT ORIGINAL HANDLING SYSTEM. APR. 27, 1976.
3,954,259.—DOUBLE BAR SEPARATOR FOR A SHEET RECEIVING TRAY. MAY 4, 1976.
3,959,573.—COMPOSITIONS AND METHODS FOR MAKING BIASABLE MEMBERS. MAY 25, 1976.
3,963,345.—PRE-COLLATION COPYING. JUNE 15, 1976.
3,977,780.—ELECTROSTATIC REPRODUCTION METHOD AND APPARATUS. AUG. 31, 1976.
3,981,498.—NON-UNIFORM CHARGING OF SHEET MATERIAL. SEPT. 21, 1976.
3,982,832.—ELECTROSTATOGRAPHIC COPYING MACHINES. SEPT. 28, 1976.
3,984,099.—AN IMPROVED DOCUMENT FEEDING SYSTEM. OCT. 5, 1976.
3,988,065.—REFLECTIVE DOCUMENT FEEDER. OCT. 26, 1976.
3,997,263.—BI-DIRECTIONAL COPIER OUTPUT. DEC. 14, 1976. BEL. 0839792, SPN. 0445641.
4,000,943.—DUAL PURPOSE DOCUMENT HANDLING SYSTEM. JAN. 4, 1977. BEL. 0837235.
4,004,941.—CLEANING METHOD FOR AUTOMATIC DOCUMENT HANDLER. JAN. 25, 1977.
4,008,956.—DOCUMENT HANDLING SYSTEM FOR PRE-COLLATION COPYING. FEB. 22, 1977. BEL. 0839792, SPN. 0445641.
4,012,140.—COPIER DOCUMENT LOADING SYSTEM. MAR. 15, 1977. BEL. 0839792, SPN. 0445641.
4,017,172.—DOCUMENT FEEDING APPARATUS. APR. 12, 1977.
4,018,523.—REPRODUCING APPARATUS AND PROCESS FOR FORMING MULTIPLE COPIES OF A DOCUMENT. APR. 19, 1977. BEL. 0842928.
4,030,721.—AUTOMATIC MANUSCRIPT DISCHARGING DEVICE FOR COPYING MACHINES. JUNE 21, 1977.
4,033,694.—COPIER DOCUMENT EJECTOR. JULY 5, 1977.
4,034,869.—FLUID MEANS TO LOAD AND UNLOAD A VERTICALLY MOVABLE DOCUMENT STORAGE RACK. JULY 12, 1977.
4,040,615.—ORIGINAL DISCHARGING DEVICE FOR COPIERS. AUG. 9, 1977.
4,043,550.—IMPROVED REGISTRATION MEANS FOR AUTOMATIC DOCUMENT HANDLING APPARATUS. AUG. 23, 1977. BEL. 847626, FRA. 7631994, SPN. 452660.
4,043,664.—INTERLINEAR FEEDER FOR COPYING MACHINE. AUG. 23, 1977.
4,043,665.—COPIER DOCUMENT HANDLER. AUG. 23, 1977.
4,047,812.—DOCUMENT BELT WITH IMPERFORATE BANDS. SEPT. 13, 1977. GER. 7700998.
4,049,255.—APPARATUS FOR FEEDING DOCUMENTS TO AND FROM A COPIER. SEPT. 20, 1977. FRA. 7706823.
4,050,751.—DOCUMENT CAROUSEL. SEPT. 27, 1977.
4,050,816.—DOCUMENT HANDLING SYSTEM. SEPT. 27, 1977. BEL. 839792, SPN. 445641.
4,053,224.—DOCUMENT HANDLING SYSTEM. OCT. 11, 1977.
4,059,260.—DOCUMENT HANDLING APPARATUS. NOV. 22, 1977.
4,062,538.—SPEED REGULATED FLUIDIC SHEET TRANSPORT. DEC. 13, 1977. BEL. 850380.
4,078,786.—AUTOMATIC DOCUMENT RECIRCULATION SYSTEM. MAR. 14, 1978.
4,079,876.—COMPUTER FORMS FEEDER. MAR. 21, 1978.
4,080,063.—COPIER DOCUMENT HANDLING SYSTEM. MAR. 21, 1978.
4,086,007.—DUAL PURPOSE DOCUMENT AND COPY SHEET FEED CASSETTE. APR. 25, 1978.
4,087,172.—DOCUMENT HANDLING APPARATUS. MAY 2, 1978.
4,093,372.—PRE-SEPARATED RECIRCULATING DOCUMENT COPYING SYSTEM. JUNE 6, 1978.
4,097,146.—ORIGINAL HANDLING SYSTEM AND PROCESS. JUNE 27, 1978.
4,099,810.—UPRIGHT DOCUMENT CAROUSEL. JULY 11, 1978.
4,108,547.—DOCUMENT LOADING FOR COPYING. AUG. 22, 1978. BEL. 839792. GRB. 1524101. SPN. 445641.
4,110,028.—DRIVE SYSTEM FOR MULTI-MODE REPRODUCING APPARATUS. AUG. 29, 1978. BEL. 844828.
4,126,817.—SERVO SYSTEM FOR MAINTAINING CONSTANT TENSION ON A WEB. NOV. 21, 1978.
4,132,401.—COPIER DOCUMENT SENSING AND CONTROL SYSTEM. JAN. 2, 1979. GRB. 1523900. USR. 604211.
4,145,041.—AUTOMATIC DOCUMENT HANDLING APPARATUS. MAR. 20, 1979.
4,146,220.—DOCUMENT HANDLING APPARATUS. MAR. 27, 1979.
4,146,326.—DOCUMENT HANDLING APPARATUS AND REPRODUCING MACHINE. MAR. 27, 1979.
4,159,824.—METHOD FOR REVERSING THE DIRECTION OF TRAVEL OF A SHEET. JULY 3, 1979.
4,160,547.—DOCUMENT HANDLING APPARATUS. JULY 10, 1979.
4,184,671.—AUTOMATIC DOCUMENT HANDLER IN DUPLEX COPYING MACHINE. JAN. 22, 1980.
4,185,908.—VERNIER BELT TENSIONING SYSTEM FOR A PHOTOCOPYING MACHINE. JAN. 29, 1980.
4,190,359.—COPIER DOCUMENT HANDLING SYSTEM. FEB. 26, 1980.
4,229,101.—DUPLEX/SIMPLEX PRECOLLATION COPYING SYSTEM. OCT. 21, 1980. BEL. 869792.
4,234,180.—RECIRCULATING DOCUMENT HANDLER CONFIGURATION. NOV. 18, 1980.
4,235,550.—AUTOMATIC DOCUMENT HANDLER CONTROL. NOV. 25, 1980.
4,248,528.—COPIER WITH DOCUMENT SENSING CONTROL. FEB. 3, 1981.
4,257,587.—DOCUMENT REGISTERING AND FEEDING APPARATUS. MAR. 24, 1981.
4,264,189.—DUPLEXING IN COMPUTER FANFOLD REPRODUCTION. APR. 28, 1981.
4,264,200.—PLATEN MODULE FOR COMPUTER FANFOLD REPRODUCTION. APR. 28, 1981.
4,278,344.—RECIRCULATING DUPLEX DOCUMENTS COPIER. JULY 14, 1981.

Class 10A 6J

4,218,026.—PAPER WEB BUFFER SYSTEM. AUG. 19, 1980.

Class 10B

3,180,637.—RECORD CARD FEEDING APPARATUS. APR. 27, 1965. CAN. 0806932.
3,357,574.—SEQUENTIAL CONTROL SYSTEM. DEC. 12, 1967. CAN. 0824898.
3,383,105.—CARD PICK-OFF APPARATUS. MAY 14, 1968. CAN. 0820743, GRB. 1193512, JAP. 0610154.
3,482,917.—CARD TRANSPORT APPARATUS. DEC. 9, 1969. CAN. 0842646, GRB. 1193516.

3,784,303.—AUTOMATIC MICROFICHE COPIER. JAN. 8, 1974. CAN. 1000779, GRB. 1412221.
4,095,732.—METHOD AND APPARATUS FOR ACCURATELY CONTROLLING THE POSITION OF A FILM TRANSPORT DEVICE. JUNE 20, 1978.

Class 10C

3,239,213.—DOCUMENT FEEDER. MAR. 8, 1966. CAN. 0766646, FRA. 1447269, GER. 1243698, GRB. 1087786, ITL. 0761046, JAP. 0497197.
3,506,257.—DOCUMENT FEEDING APPARATUS. APR. 14, 1970. CAN. 0885333, GRB. 1253416.
3,567,214.—SHEET FEEDING AND SEPARATING APPARATUS. MAR. 2, 1971. BEL. 0734128, CAN. 0902124, FRA. 6919122, GER. 1929105, GRB. 1263193, HOL. 0144551, ITL. 0866188, SPN. 0368173, STZ. 0501501, SWD. 6908176.
3,861,671.—LIFTABLE BAIL BAR FOR ALLOWING RETURN OF MULTIPLY SEPARATED SHEETS TO STACK. JAN. 21, 1975.
3,895,790.—MOVABLE BAIL BAR. JULY 22, 1975. BEL. 0815050, CAN. 1009267.
3,936,180.—XEROGRAPHIC APPARATUS WITH SAMPLE PRINT CAPABILITIES. FEB. 3, 1976. BEL. 0809398, ITL. 1006708.
3,968,364.—HEIGHT SENSING DEVICE. JULY 6, 1976.
3,993,300.—AUTOMATIC FEEDER FOR COMPOSITE COPYING. NOV. 23, 1976. BEL. 0815215, GRB. 1467996, STZ. 0561917.
4,025,068.—SHEET FEEDER. MAY 24, 1977.
4,054,284.—PAPER-ANTI-SKEW DEVICE. OCT. 18, 1977.
4,174,102.—IMPROVED SHUT SEPARATING AND FEEDING APPARATUS. NOV. 13, 1979.

Class 10D

3,239,213.—DOCUMENT FEEDER. MAR. 8, 1966. CAN. 0766646, FRA. 1447269, GER. 1243698, GRB. 1087786, ITL. 0761046, JAP. 0497197.
3,495,904.—RADIANT ENERGY PROTECTIVE APPARATUS. FEB. 17, 1970.
3,581,000.—INCREMENTAL STEPPING PAPER DRIVE. MAY 25, 1971.
3,618,123.—FACSIMILE DRUM CONVEYOR. NOV. 2, 1971. ARG. 0181314, BEL. 0743659, CAN. 0918186, FRA. 6944287, GER. 1963786, GRB. 1280340, ITL. 0880304, JAP. 0852728, MEX. 0122967, SPN. 0374915, SWD. 0363457, VZL. 0025438.
3,790,159.—AUTOMATIC DOCUMENT HANDLING DEVICE. FEB. 5, 1974. CAN. 1013377, GRB. 1417793.
3,815,899.—SHEET DELIVERY DEVICE. JUNE 11, 1974. CAN. 0994377, FRA. 7409303, GRB. 1456422.
3,854,715.—CAM. DEC. 17, 1974. CAN. 1007256, GRB. 1456576.

Class 10E

3,288,459.—DOCUMENT FEEDING APPARATUS. NOV. 29, 1966. CAN. 0788345, JAP. 0632541, MEX. 0086958.
3,300,208.—COPY POSITIONING APPARATUS AND METHOD. JAN. 24, 1967. CAN. 0817270, JAP. 0605646, MEX. 0090842.
3,473,035.—DOCUMENT TRANSPORT AND REGISTRATION SYS USING PHOTOCELLS. OCT. 14, 1969. ARG. 0170131, CAN. 0858983, CHL. 0024005, JAM. 0001926, MEX. 0101674, PRU. 0009301, URG. 0009238, VZL. 0023677.
3,510,125.—DOCUMENT REGISTRATION SYSTEM. MAY 5, 1970. BEL. 0726865, CAN. 0897195, FRA. 2000318, GER. 1902112, GRB. 1253417, ITL. 0854755, JAP. 0783473.
3,558,223.—DOCUMENT CENTERING APPARATUS. JAN. 26, 1971.
3,630,611.—DOCUMENT REGISTRATION APPARATUS. DEC. 28, 1971.
3,630,620.—PLATEN COVER FOR COPYING MACHINES. DEC. 28, 1971. CAN. 0921307, GRB. 1309313.
3,642,370.—DOCUMENT PRESENTATION DEVICE. FEB. 15, 1972. GRB. 1206633.
3,724,941.—ELECTROPHOTOGRAPHIC APPARATUS. APR. 3, 1973.
3,741,644.—ORIGINAL POSITION CONFIRMING MEANS FOR DUPLICATING APPARATUS. JUNE 26, 1973.
3,771,082.—COPYING APPARATUS WITH AUXILIARY LIGHT SOURCE FOR ILLUMINATING AN ORIGINAL TO BE REPRODUCED. NOV. 6, 1973.
3,829,082.—AUTOMATIC DOCUMENT HANDLER. AUG. 13, 1974. CAN. 0986958, GRB. 1421425.
3,854,715.—CAM. DEC. 17, 1974. CAN. 1007256, GRB. 1456576.

3,861,673.—BI-DIRECTIONAL SHEET TRANSPORT. JAN. 21, 1975. CAN. 1004240.
3,877,804.—CORNER REGISTRATION DEVICE FOR DOCUMENT FEEDER. APR. 15, 1975.
3,883,134.—DETECTING AND REMOVING APPARATUS FOR SKEW FED SHEETS. MAY 13, 1975.
3,915,447.—HORIZONTAL PLATEN BELT TRANSPORT. OCT. 28, 1975.
3,984,098.—PNEUMATIC REGISTRATION AND CLAMPING APPARATUS. OCT. 5, 1976. BEL. 0848824.
3,984,099.—AN IMPROVED DOCUMENT FEEDING SYSTEM. OCT. 5, 1976.
3,990,794.—COPYING MACHINE. NOV. 9, 1976. STZ. 0587508.
4,026,542.—DUAL REGISTRATION APPARATUS. MAY 31, 1977.
4,029,411.—VARIABLE MAGNIFICATION COPIER. JUNE 14, 1977. BEL. 0839792, SPN. 0445641.
4,033,574.—DOCUMENT HANDLING APPARATUS. JULY 5, 1977.
4,033,694.—COPIER DOCUMENT EJECTOR. JULY 5, 1977.
4,043,550.—IMPROVED REGISTRATION MEANS FOR AUTOMATIC DOCUMENT HANDLING APPARATUS. AUG. 23, 1977. BEL. 847626, FRA. 7631994, SPN. 452660.
4,043,665.—COPIER DOCUMENT HANDLER. AUG. 23, 1977.
4,047,812.—DOCUMENT BELT WITH IMPERFORATE BANDS. SEPT. 13, 1977. GER. 7700998.
4,050,688.—ORTHOGONAL DOCUMENT HANDLING APPARATUS. SEPT. 27, 1977.
4,054,285.—APPARATUS FOR REGISTERING AND INVERTING SHEETS. OCT. 18, 1977.
4,055,340.—ASSISTED PNEUMATIC TRANSPORT AND REGISTRATION APPARATUS. OCT. 25, 1977. BEL. 848823.
4,062,538.—SPEED REGULATED FLUIDIC SHEET TRANSPORT. DEC. 13, 1977. BEL. 850380.
4,066,254.—THREE-WAY PNEUMATIC REGISTRATION APPARATUS. JAN. 3, 1978.
4,073,001.—APPARATUS FOR NEUTRALIZING AND REGISTERING AN ELECTROSTATICALLY CHARGED SHEET. FEB. 7, 1978.
4,076,233.—DOCUMENT HANDLING APPARATUS. FEB. 28, 1978. BEL. 847625, FRA. 7631999, SPN. 452661.
4,090,704.—REGISTRATION STATION. MAY 23, 1978.
4,097,146.—ORIGINAL HANDLING SYSTEM AND PROCESS. JUNE 27, 1978.
4,116,431.—METHOD FOR TRANSPORTING AND REGISTERING STACKED SHEETS. SEPT. 26, 1978.
4,124,205.—DOCUMENT HANDLING. NOV. 7, 1978.
4,130,274.—PNEUMATIC REGISTRATION APPARATUS. DEC. 19, 1978. BEL. 847912. SAF. 6401.
4,143,960.—RETRACTABLE SUPPORT MEMBER. MAR. 13, 1979.
4,146,219.—DOCUMENT TRANSPORT APPARATUS. MAR. 27, 1979. GRB. 1529698. SPN. 452659.
4,247,095.—SHEET FEEDING AND REGISTRATION APPARATUS. JAN. 27, 1981.
4,266,762.—SHEET ALIGNMENT AND FEEDING APPARATUS. MAY. 12, 1981.
4,268,022.—CONFORMING DOCUMENT ALIGNER. MAY 19, 1981.

Class 10F

3,288,464.—CARD INVERTING APPARATUS. NOV. 29, 1966. CAN. 0803316, JAP. 0547200.
3,408,140.—DOCUMENT HANDLING APPARATUS. OCT. 29, 1968. CAN. 0842643, GRB. 1143062.
3,416,791.—DOCUMENT INVERTING APPARATUS. DEC. 17, 1968, CAN. 0853562, GRB. 1210564, JAP. 0648074.
3,844,654.—DUPLEX COPYING SYSTEM. OCT. 29, 1974. FRA. 7340246, GRB. 1445854.
3,862,802.—SHEET REVERSING APPARATUS AND A DUPLEX REPRODUCING APPARATUS EMPLOYING SAME. JAN. 28, 1975. BEL. 0818894.
3,926,338.—THERMALLY INSENSITIVE PARTICLE CONCENTRATION CONTROLLER. DEC. 16, 1975.
3,980,406.—DUPLEX IMAGING SYSTEM. SEPT. 14, 1976.
4,040,616.—SHEET TURN AROUND INVERTER. AUG. 9, 1977. FRA. 7701111.
4,054,285.—APPARATUS FOR REGISTERING AND INVERTING SHEETS. OCT. 18, 1977.
4,089,515.—DOCUMENT STORAGE AND TRANSPORT APPARATUS. MAY 16, 1978. BEL. 850379.
4,111,547.—DUPLEX DOCUMENT COPYING. SEPT. 5, 1978.
4,184,671.—AUTOMATIC DOCUMENT HANDLER IN DUPLEX COPYING MACHINE. JAN. 22, 1980.
4,190,354.—COPIER JOB RECOVERY SYSTEM. FEB. 26, 1980.

4,229,101.—DUPLEX/SIMPLEX PRECOLLATION COPYING SYSTEM. OCT. 21, 1980. BEL. 869792.
4,234,180.—RECIRCULATING DOCUMENT HANDLER CONFIGURATION. NOV. 18, 1980.
4,238,126.—RECIRCULATING SIMPLEX/DUPLEX DOCUMENT HANDLER. DEC. 9, 1980.
4,262,895.—INVERTER WITH VARIABLE BUCKLING CONTROL. APR. 21, 1981.
4,278,344.—RECIRCULATING DUPLEX DOCUMENTS COPIER. JULY 14, 1981.

Class 10G

3,419,265.—DOCUMENT STACKER APPARATUS. DEC. 31, 1968. ARG. 0171423, CAN. 0833415, CHL. 0024006, JAM. 0001859, MEX. 0100967, PRU. 0001930, URG. 0009140, VZL. 0023736.
3,460,825.—FAN FOLD STACKING APPARATUS. AUG. 12, 1969. CAN. 0855586, GRB. 1205418.
3,497,207.—SORTING APPARATUS FOR DOCUMENTS. FEB. 24, 1970. BEL. 0727203, CAN. 0895731, FRA. 6900957, GRB. 1245841, HOL. 0148006, ITL. 0854588.
3,630,517.—COUNTER STACKER. DEC. 28, 1971.
3,729,188.—DOCUMENT STACKER APPARATUS. APR. 24, 1973. CAN. 1000311, FRA. 0701711, GRB. 1303165, ITL. 0893040.
3,865,480.—ELECTROSTATIC CONTROL OF FAN FOLD PAPER STACKING. FEB. 11, 1975.
4,017,066.—SET SEPARATOR. APR. 12, 1977.
4,033,579.—AN OFFSET STACKER. JULY 5, 1977.
4,093,372.—PRE-SEPARATED RECIRCULATING DOCUMENT COPYING SYSTEM. JUNE 6, 1978.
4,132,400.—APPARATUS FOR ALIGNING A STACK OF SHEETS. JAN. 2, 1979.
4,166,614.—JOGGING AND NORMAL FORCE FOR SHEET FEEDING. SEPT. 4, 1979.

Class 10H

3,467,371.—SHEET DISTRIBUTOR. SEPT. 16, 1969. ARG. 0168293, ATR. 0294140, AUS. 0423257, BEL. 0702898, CAN. 0925803, CHL. 0023102, CLB. 0017342, DNK. 0124250, EIR. 0031306, FIN. 0047869, FRA. 1541084, GRB. 1193513, GRK. 0038675, IND. 0112000, ISR. 0028519, ITL. 0813836, JAP. 0645588, LXB. 0054335, MEX. 0099952, NOR. 0124920, NZL. 0149788, PAK. 0118964, PLP. 0006507, PRU. 0009477, PTG. 0048210, SAF. 0674986, SPN. 0344349, STZ. 0480253, SWD. 0337384, TRK. 0015492, URG. 0008974, VZL. 0026276.
3,815,896.—AUTOMATIC DOCUMENT HANDLER. JUNE 11, 1974. BEL. 0797889, CAN. 0984863, FRA. 7316287, GRB. 1421426, ITL. 0987316, SPN. 0414486.
3,884,408.—APPARATUS FOR EJECTING A STAPLED SET OF SHEETS SIDEWISE FROM THE COLLATING BINS. MAY 20, 1975.
3,907,277.—METHOD AND DEVICE FOR REMOVING DOCUMENTS FROM A PLATEN. SEPT. 23, 1975.
3,913,467.—COLLATING APPARATUS. OCT. 21, 1975.
3,944,207.—LIMITLESS SORTER. MAR. 16, 1976.
3,944,366.—SLIDING PLATEN COVER APPARATUS. MAR. 16, 1976.
3,963,345.—PRE-COLLATION COPYING. JUNE 15, 1976. BEL. 0839792, SPN. 0445641.
3,997,263.—BI-DIRECTIONAL COPIER OUTPUT. DEC. 14, 1976. BEL. 0839792, SPN. 0445641.
4,008,956.—DOCUMENT HANDLING SYSTEM FOR PRE-COLLATION COPYING. FEB. 22, 1977. BEL. 0839792, SPN. 0445641.
4,012,140.—COPIER DOCUMENT LOADING SYSTEM. MAR. 15, 1977. BEL. 0839792, SPN. 0445641.
4,050,816.—DOCUMENT HANDLING SYSTEM. SEPT. 27, 1977. BEL. 839792, SPN. 445641.
4,108,547.—DOCUMENT LOADING FOR COPYING. AUG. 22, 1978. BEL. 839792. GRB. 1524101. SPN. 445641.
4,120,580.—COLLATING SYSTEM FOR SLIDE REPRODUCTION. OCT. 17, 1978.

Class 10H 6K

4,212,457.—PRE/POST-COLLATION COPYING SYSTEM. JULY 15, 1980.

Class 10I

3,495,904.—RADIANT ENERGY PROTECTIVE APPARATUS. FEB. 17, 1970.
3,600,610.—TIME DELAY CIRCUIT FOR A RADIANT ENERGY PROTECTIVE APPARATUS. AUG. 17, 1971.
3,609,737.—METHOD AND APPARATUS FOR ARTICLE DETECTION UTILIZING CORONA DISCHARG. SEPT. 28, 1971. CAN. 0872468, GER. 1932248, GRB. 1259998, JAP. 0657911.

3,672,760.—XEROGRAPHIC PLATE TRANSPORTING MECHANISM. JUNE 27, 1972. CAN. 0939555, GRB. 1359888.
3,674,363.—SHEET FEEDING APPARATUS. JULY 4, 1972. ARG. 0176106, ATR. 0307230, AUS. 0447387, BEL. 0734129, DNK. 0131336, FRA. 6919121, GRB. 1263192, ITL. 0866189, MEX. 0112842, SPN. 0368216, STZ. 0501500, SWD. 0356136, TIW. 0006604.
3,697,063.—DOCUMENT HANDLING APPARATUS. OCT. 10, 1972. GRB. 1369618.
3,744,047.—SUPERPOSED SHEET DETECTION. JULY 3, 1973. CAN. 0985762, FRA. 7231694, GRB. 1396560, ITL. 0967501.
3,748,088.—FUSER CONTROL APPARATUS. JULY 24, 1973.
3,778,618.—PHOTODETECTION OF NON-OPAQUE OBJECTS TRANSPRTD ALONG A CONVEYOR BY USE OF A LIGHT BLCKING OPAQU. DEC. 11, 1973. GRB. 1406170.
3,790,158.—AUTOMATIC DOCUMENT HANDLER. FEB. 5, 1974. GRB. 1421428.
3,894,513.—COPYING MACHINE WITH BEAD PICKOFF ROLLER. JULY 15, 1975. FRA. 7342586, GRB. 1441288.
3,945,546.—ZIG ZAG FOLDED STRIP BOTTOM FEEDER. MAR. 23, 1976.
4,116,431.—METHOD FOR TRANSPORTING AND REGISTERING STACKED SHEETS. SEPT. 26, 1978.
4,132,401.—COPIER DOCUMENT SENSING AND CONTROL SYSTEM. JAN. 2, 1979. GRB. 1523900. USR. 604211.
4,203,586.—MULTIFEED DETECTOR. MAY 20, 1980.
4,231,567.—METHOD AND APPARATUS FOR CLEARING JAMS IN COPIERS. NOV. 4, 1980.

Class 12

4,027,138.—A FUSER RELEASE MATERIAL DISPENSER. MAY 31, 1977.
4,179,209.—MULTICOLOR LINE SCREEN. DEC. 18, 1979.

Class 12A

3,384,488.—POLYCHROMATIC PHOTOELECTROPHORETIC IMAGING COMPOSITION. MAY 21, 1968.
3,384,565.—PROCESS OF PHOTOELECTROPHORETIC COLOR IMAGING. MAY 21, 1968. ARG. 0149921, ATR. 0304268, AUS. 0414156, BEL. 0667116, BRA. 0087920, CAN. 0867678, CHL. 0021697, CLB. 0014706, FRA. 1450843, GER. 1497243, GRB. 1124626, GRK. 0030605, IND. 0119647, ISR. 0023973, ITL. 0744030, JAP. 681941, LXB. 0049058, MEX. 0091899, NOR. 0128733; NZL. 0142323, PPU. 0009538, PTG. 0044324, SAF. 653922, SPN. 0321858, STZ. 0481409, SWD. 6509579, URG. 0009540. VZL. 0017273.
3,384,566.—METHOD OF PHOTOELECTROPHORETIC IMAGING. MAY 21, 1968.
3,734,610.—MICROFICHE VIEWER-COPIER WITH BILLING DATA STORAGE. MAY 22, 1973. CAN. 1003025.
3,759,611.—MICROIMAGE RANSOM ACCESS AND RETRIEVAL PRINTER. SEPT. 18, 1973. CAN. 0987156, GRB. 1427017.

Class 12B

3,383,993.—PHOTOELECTROPHORETIC IMAGING APPARATUS. MAY 21, 1968. ARG. 0165160, AUS. 0419734, BEL. 0692048, CAN. 0866143, FRA. 1507051, GRB. 1158301, GRK. 0033285, HOL. 0150926, ITL. 0862555, LXB. 0052738, MEX. 0096357, PTG. 0044324, SAF. 0067022, SPN. 0335121, STZ. 0510901, VZL. 0024450.
3,610,748.—PHOTOELECTROPHORETIC IMAGING SYSTEM. OCT. 5, 1971. BEL. 0752438, CAN. 0922569, FRA. 7023045, GRB. 1319532, ITL. 0894621, JAP. 0739527.
3,656,847.—ELEVATOR MECHANISM. APR. 18, 1972.
3,663,396.—KINESCOPE PHOTOELECTROPHORETIC IMAGING METHODS AND SYSTEMS. MAY 16, 1972. ARG. 0196858, BEL. 0762417, CAN. 0935965, FRA. 7104350, GRB. 1345571, ITL. 0918121, JAP. 0743838, MEX. 0131834.
3,697,409.—BELT ELECTRODE IMAGING SYSTEM. OCT. 10, 1972. ARG. 0183572, BEL. 0760077, BRA. 7023343, CAN. 0937803, FRA. 7045072, GRB. 1339734, ITL. 0913368, JAP. 0752721, MEX. 0119368, VZL. 0032930.
3,844,779.—PHOTOELECTROPHORETIC IMAGING METHOD EMPLOYING A BELT ELECTRODE. OCT. 29, 1974.
4,043,654.—DISPLAY SYSTEM. AUG. 23, 1977.
4,043,655.—PHOTOELECTROPHORETIC IMAGING REPRO- DUCTION DEVICE. AUG. 23, 1977.

Class 12C

3,427,242.—APPARATUS FOR CONTINUOUS PHOTOELECTROPHORETIC IMAGING. FEB. 11, 1969. BEL. 0743902, CAN. 0851701, FRA. 1521727, GER. 1572385, GRB. 1185932, ITL. 0794269, JAP. 0580245, MEX. 0097005.
3,474,019.—PHOTOELECTROPHORETIC IMAGING MTD INC. CONTACTNG IMGNG SUSPNSN W/ ALG SFC OF FLEXIBLE ELECTRODE. OCT. 21, 1969. AUS. 0418224, BEL. 0692912, BRA. 6678842, CAN. 0834679, GRK. 0033301, LXB. 0052730, MEX. 0090286, PTG. 0046984, SAF. 0670024, SPN. 0335454.
3,551,320.—IMAGING APPARATUS. DEC. 29, 1970.
3,600,081.—IMAGING APPARATUS. AUG. 17, 1971. ARG. 0192211, ATR. 0324839, AUS. 0455820, BEL. 0758903, CAN. 0936732, CZC. 0164288, EGR. 0090482. FRA. 7041652, GRB. 1335990, ITL. 0909307, JAP. 0751878, MEX. 0122272, PNM. 0002094, SPN. 0385453, STZ. 0518582, SWD. 0362717, TIW. 0008461, USR. 0412697, VZL. 0032926.
3,609,028.—IMAGING APPARATUS. SEPT. 28, 1971. ARG. 0186570, ATR. 0319749, AUS. 0455572, BEL. 0758806, CAN. 0935012, EGR. 0086977, FRA. 7041648, GRB. 1335988, ITL. 0909306, MEX. 0121331, PLD. 0082852, PNM. 0002167, SPN. 0385452, STZ. 0518580, SWD. 0361753, TIW. 0007385, USR. 0465806, VZL. 30683.
3,622,691.—HIGH SPEED LIGHT RESPONSIVE TRANSFORM COMPUTER FOR A LIGHT-SENSITIVE PRINTING SYSTEM. NOV. 23, 1971. CAN. 0915813, GRB. 1335222, JAP. 0774709.
3,642,365.—AUTOMATED IMAGING MACHINE. FEB. 15, 1972. ARG. 0183571, ATR. 0324123, AUS. 0456428, BEL. 0758902, CAN. 0937440, EGR. 0091986, FRA. 7041647, GRB. 1337145, ITL. 0909311, JAP. 0758463, MEX. 0120289, PLD. 0082861, PNM. 0002255, SPN. 0385457. STZ. 0544327, SWD. 0367493, TIW. 0007386.
3,642,606.—APPARATUS FOR IMAGE FORMATION ON THE INSIDE OF A CYLINDER. FEB. 15, 1972. ARG. 0183573, BEL. 0760749, BRA. 7022094, CAN. 0938490, FRA. 7047632, GRB. 1339578, ITL. 0913902, JAP. 0752722, MEX. 0119589, VZL. 0032929.
3,644,035.—FLAT PLATE TRAVELING ROLLER IMAGING. FEB. 22, 1972. ARG. 0183670, AUS. 0456429, BEL. 0758904, BRA. 7023406, CAN. 0923356, EGR. 0090280, FRA. 7041653, GRB. 1335051, ITL. 0909308, JAP. 0751879, MEX. 0119530, PLD. 0082860, SPN. 0385454, STZ. 0528763, SWD. 0367074, TIW. 0008460, USR. 0404290, VZL. 30682.
3,645,616.—PHOTOELECTROPHORETIC IMAGE TRANSFER APPARATUS. FEB. 29, 1972. CAN. 0949049, GRB. 1337417, JAP. 783768.
3,647,290.—PHOTOELECTROPHORETIC IMAGING SYSTEM. MAR. 7, 1972. ARG. 0184762, AUS. 0454820, BEL. 0058902, CAN. 0939954, EGR. 0090483, FRA. 7061651, GER. 1337416, GRB. 1337416, ITL. 0909312, JAP. 0751880, MEX. 0119752, SPN. 0385458, STZ. 0530662, SWD. 0366850, TIW. 0007384, USR. 0419062, VZL. 30685.
3,667,842.—IMAGING APPARATUS. JUNE 6, 1972. ARG. 0193347, BEL. 0768538, CAN. 0953559, FRA. 7122750, GRB. 1350395, ITL. 0927384, MEX. 0123298.
3,703,335.—MULTIPLE EXPOSURE IMAGING APPARATUS. NOV. 21, 1972. BEL. 0760457, CAN. 0968605, FRA. 7047141, GRB. 1339550, ITL. 0913636, JAP. 0759479.
3,719,484.—PHOTOELECTROPHORETIC IMAGING METHOD. MAR. 6, 1973. CAN. 0957890, GRB. 1369701.
3,728,018.—IMAGING APPARATUS. APR. 17, 1973. CAN. 0924156, GRB. 1335697.
3,800,743.—MATERIALS APPLICATION APPARATUS. APR. 2, 1974.
3,860,336.—PHOTOELECTROPHORETIC IMAGING MACHINE AND APPTS FOR CONTACTING A ROLLER TO A SURFACE TO BE CONTACT. JAN. 14, 1975.
3,860,337.—MULTIPLE EXPOSURE METHOD AND APPARATUS. JAN. 14, 1975. CAN. 0957890, GRB. 1369701.
3,990,043.—CHARACTER CODING AND RECOGNITION SYSTEM. NOV. 2, 1976.
4,006,982.—PHOTOELECTROPHORETIC CONCURRENT PROCESS CYCLING. FEB. 8, 1977. BEL. 0841077.
4,009,466.—CHARACTER CODING AND RECOGNITION SYSTEM. FEB. 22, 1977.
4,066,452.—VELOCITY COMPENSATION FOR BEAD BYPASS. JAN. 3, 1978.
4,084,896.—PHOTOELECTROPHORETIC WEB IMAGING APPARATUS. APR. 18, 1978. BEL. 841077, FRA. 7612178.

Class 12D

3,448,025.—PHOTOELECTROPHORETIC IMAGING SYSTEM UTILIZING A PROGRAMMED POTENTIAL APPLICATION. JUNE 3, 1969. ARG. 0167580, AUS. 0417981. BEL. 0719188, CAN. 0875492, FRA. 0095530, GER. 1797123, GRB. 1149666, ITL. 0890086, MEX. 0100805, VZL. 0025946.
3,485,738.—PHOTOELECTROPHORETIC IMG PROCESS EMPLOYNG LAYER OF INSULATNG LIQUID TO IMPROVE IMAGE QUALITY. DEC. 23, 1969. AUS. 0431891, BEL. 0743640, CAN. 0850591, GER. 1522751, GRB. 1174831, JAP. 0578397.
3,565,614.—IMAGE TRANSFER. FEB. 23, 1971. ARG. 0157773, AUS. 0413930, BEL. 0696853, CAN. 0890362, FRA. 1520919, GER. 1572384, GRB. 1185931, ITL. 0801198, JAP. 0586922, MEX. 0099070, SPN. 0349966, STZ. 0482230, SWD. 0332754, VZL. 0024013.
3,582,205.—IMAGING APPARATUS. JUNE 1, 1971.
3,616,398.—PHOTOELECTROPHORETIC IMAGING COMPOSITION CONTAINING B-CAROTENE. OCT. 26, 1971.
3,657,103.—ELECTRODE IMAGING SYSTEM. APR. 18, 1972. CAN. 0890360, GRB. 1309663, JAP. 0731609.
3,697,407.—PREVENTION OF ARCING IN AN ELECTRODE IMAGING SYSTEM. OCT. 10, 1972. CAN. 0884225, GRB. 1309127, JAP. 0731608.
3,697,408.—IMAGING SYSTEM. OCT. 10, 1972. CAN. 0890361, GRB. 1312733, JAP. 0731610.
3,708,286.—PHOTOELECTROPHORETIC IMAGING WITH ULTRASONIC VIBRATION DURING IMAGING. JAN. 2, 1973. ARG. 0174613, ATR. 0293874, AUS. 0455712, BEL. 0739747, CAN. 0922141, FRA. 6933738, GER. 1949416, GRB. 1279285, HOL. 0146950, ITL. 0877873, JAP. 0709042, MEX. 0108820.
3,853,556.—METHOD FOR ELIMINATING ELECTRICAL ARCING DURING PHOTOELECTROPHORETIC IMAGING. DEC. 10, 1974.

Class 12E

3,535,221.—PHOTOELECTROPHORETIC IMAGING SYSTEM EMPLOYING A PHOTOCONDUCTOR COATING FOR THE BLOCKING ELECTRO. OCT. 20, 1970. ARG. 0176485, AUS. 0448560, BEL. 0722301, CAN. 0891971, FRA. 1587938, GER. 1802988, GRB. 1236619, ITL. 0845022, JAP. 0693378, MEX. 0108364, VZL. 0023742.
3,595,771.—METHOD OF REMOVING ACCUMULATED CHARGES IN PHOTOELECTROPHORETIC IMAGING. JULY 27, 1971. ARG. 0198476, ATR. 0302041, AUS. 0448837, BEL. 0737549, CAN. 0922955, FRA. 6927969, GER. 1941463, GRB. 1267255, ITL. 0869935, JAP. 0704156, SWD. 0341726.
3,639,224.—PHOTOELECTROPHORETIC IMAGING SYSTEM. FEB. 1, 1972. CAN. 0922568, GRB. 1313683, JAP. 0739526.
3,657,103.—ELECTRODE IMAGING SYSTEM. APR. 18, 1972. CAN. 0890360, GRB. 1309663, JAP. 0731609.
3,669,872.—IMAGING SYSTEM. JUNE 13, 1972.
3,775,107.—IMAGING SYSTEM. NOV. 27, 1973.
3,859,576.—HIGH PERFORMANCE BLOCKING ELECTRODE FOR ELECTROPHOTOPHORESIS. JAN. 7, 1975. BEL. 0810802, ITL. 1006354.
3,866,572.—FORAMINOUS ELECTROSTATOGRAPHIC TRANSFER SYSTEM. FEB. 18, 1975. BEL. 0815546, CAN. 1009503, FRA. 7418641, GRB. 1448386, ITL. 1012842, SPN. 0426760.
3,956,524.—METHOD FOR THE PREPARATION OF ELECTROSTATOGRAPHIC AND PHOTORECEPTORS. MAY 11, 1976.
3,966,466.—PHOTOELECTROPHORETIC IMAGING PROCESS USING DARK CHARGE INJECTING AGENT ON BLOCKING ELECTRODE. JUNE 29, 1976.
3,967,961.—PHOTOELECTROPHORETIC IMAGING PROCESS EMPLOYING A DARK CHARGE INJECTING AGENT-AKLYD RESIN COATING. JULY 6, 1976.
3,980,477.—PHOTOELECTROPHORESIS WITH DARK CHARGE INJECTING ELEMENT. SEPT. 14, 1976.

Class 12F

3,695,755.—PHOTOELECTROPHORETIC CAMERA. OCT. 3, 1972. CAN. 0958580, GRB. 1359694.
3,702,289.—PHOTOELECTROPHORETIC PROC-ESS AND APPARATUS. NOV. 7, 1972. CAN. 0958579, GRB. 1359695.
3,705,766.—PHOTOELECTROPHORETIC APPARATUS. DEC. 12, 1972. CAN. 0955100, GRB. 1359862.

Class 12G

3,655,550.—ELECTROSTATIC PIGMENT FILTER. APR. 11, 1972.

3,656,200.—CLEANING APPARATUS. APR. 18, 1972.
3,658,687.—APPARATUS FOR FORMING IMAGES WITH APPLICATOR SHEARING SMOOTHING AND CLEANING MEANS. APR. 25, 1972. CAN. 0916433, GRB. 1337149, JAP. 0751881.
3,659,302.—CLEANING APPARATUS. MAY 2, 1972.
3,673,632.—CLEANING APPARATUS. JULY 4, 1972.
3,686,035.—CLEANING APPARATUS. AUG. 22, 1972. CAN. 0925660, GRB. 1335989.
3,821,027.—METHOD OF CLEANING ACCUMULATED MATERIAL FROM A SLOT. JUNE 28, 1974.
3,919,737.—CLEANING APPARATUS. NOV. 18, 1975.
3,945,724.—VELOCITY COMPOSITION FOR BEAD BYPASS. MAR. 23, 1976.
3,950,088.—VELOCITY COMPENSATION FOR BEAD BYPASS WITH SPEED REDUCTION. APR. 13, 1976.
3,986,772.—BEAD BYPASS. OCT. 19, 1976.
3,988,060.—BEAD BYPASS SPEED REDUCTION. OCT. 26, 1976.
3,989,365.—MOTION COMPENSATION FOR BEAD BYPASS. NOV. 2, 1976.
4,066,452.—VELOCITY COMPENSATION FOR BEAD BYPASS. JAN. 3, 1978.

Class 12H

3,505,131.—PROCESS FOR THE PREPARATION OF A CUPROUS IODIDE CONDUCTIVE FILM. APR. 7, 1970. CAN. 0876074, GER. 1800653, GRB. 1244012, JAP. 0615874.
3,623,680.—CLUTCH/BRAKE MECHANISM. NOV. 30, 1971.
3,623,805.—DRIVE MECHANISM FOR IMAGING APPARATUS. NOV. 30, 1971.
3,628,859.—IMAGING MACHINE IMPROVEMENT. DEC. 21, 1971. BEL. 0760455, CAN. 0937436, FRA. 7047139, GRB. 1339549, ITL. 0913635, JAP. 0764505.
3,630,615.—METHOD AND APPARATUS FOR TRANSPORTING SUPPORT MATERIAL. DEC. 28, 1971.
3,630,884.—TRANSPARENT ELECTRODE IMAGING IMPROVEMENT. DEC. 28, 1971. CAN. 0890359, GRB. 1313696, JAP. 0739525.
3,639,049.—COPY SYSTEM. FEB. 1, 1972.
3,640,616.—OPAQUE ILLUMINATION AND SCANNING SYSTEM. FEB. 8, 1972. CAN. 0926674, GRB. 1337418, JAP. 0731615.
3,647,294.—MATERIALS APPLICATION AND CLEANING APPARATUS FOR XEROGRAPHIC APPARATUS. MAR. 7, 1972. CAN. 0913355, GRB. 1337146, JAP. 0759478.
3,654,654.—CLEANING APPARATUS. APR. 11, 1972. CAN. 0925257, GRB. 1335850, JAP. 0791054.
3,673,632.—CLEANING APPARATUS. JULY 4, 1972.
3,681,064.—PHOTELCTROPHRTC IMNG PROCS EMPLYNG MULTI-COMPNT ELCTRCLY PHOTOSNTV PARTICLE. AUG. 1, 1972.
3,685,897.—PHOTOELECTROPHORETIC APPARATUS USING PYRAMID GEARS. AUG. 22, 1972. CAN. 0957542.
3,687,109.—MATERIALS APPLICATION APPARATUS. AUG. 29, 1972. CAN. 0915907, GRB. 1337148.
3,697,167.—OPTICAL PROJECTION APPARATUS. OCT. 10, 1972. BEL. 0772913, CAN. 0955090. FRA. 7134731, GRB. 1316023, ITL. 0936735.
3,703,459.—LIQUID APPLICATOR. NOV. 21, 1972.
3,718,393.—IMAGING APPARATUS. FEB. 27, 1973.
3,722,993.—MATERIALS APPLICATION APPARATUS. MAR. 27, 1973.
3,730,620.—FOCUSING METHOD. MAY 1, 1973.
3,737,221.—ROTATIONAL DRIVE MECHANISM. JUNE 5, 1973.
3,744,897.—TRANSPARENT ELECTRODE FOR ELECTROPHORETIC IMAGING. JULY 10, 1973.
3,769,850.—PHOTOELECTROPHORETIC APPARATUS USING PYRAMID GEARS. NOV. 6, 1973.
3,776,628.—PHOTOELECTROPHORETIC IMAGING SYSTEM. DEC. 4, 1973.
3,784,294.—IMAGE DENSITY CONTROL. JAN. 8, 1974.
3,840,299.—PHOTOELECTROPHORETIC IMAGING APP FOR VARYING ADVANCING RATE OF VELOCITY OF ROLLER ELECTRODES. OCT. 8, 1974.
3,844,651.—PHOTELCTRPHRTC IMG APP FOR CONTRLNG TIME INTRVL OF SUCSSV ROLLR ELCTRDS LEAVNG AND ENTERNG IMG RE. OCT. 29, 1974.
3,920,330.—ELECTROPHORETIC IMAGING APPARATUS. NOV. 18, 1975. BEL. 0777719, CAN. 0961334, FRA. 7201005, GRB. 1376241, ITL. 0946357.
3,944,353.—BACKGROUND REDUCTION. MAR. 16, 1976.
3,930,640.—LAMP CONTROL AND LAMP SWITCH CIRCUIT FOR CONTROLLING LIGHT BALANCE. APR. 13, 1976.
3,952,700.—LIQUID APPLICATOR. APR. 27, 1976.
3,954,465.—ELECTROPHORETIC IMAGING METHODS. MAY 4, 1976. BEL. 0777719, CAN. 0961334, FRA. 7201005, GRB. 1376241, ITL. 0946357.
3,957,510.—OVERFLOW PREVENTION FOR LIQUID BETWEEN FLEXIBLE LAYERS ON A SOLID SURFACE. MAY 18, 1976.
3,981,459.—PHOTOELECTROPHORETIC ELECTROSTATIC TACKING CAPSTAN WEB TENSION SYS. SEPT. 21, 1976.
3,982,710.—PHOTOELECTROPHORETIC WEB TENSION SYSTEM. SEPT. 28, 1976.
3,985,434.—PHOTOELECTROPHORETIC PIGMENT DISCHARGING WITH AC COROTRON OR UV ILLUMINATION. OCT. 12, 1976.
3,989,366.—PHOTOELECTROPHORETIC IMAGING APPARATUS HAVING A DEVICE FOR INCREASING THE FRICTION FORCE BETWEE. NOV. 2, 1976. BEL. 0841080..
3,989,367.—APPARATUS FOR CONTACTING A ROLLER TO A SURFACE TO BE CONTACTED. NOV. 2, 1976.
3,991,992.—PHOTOELECTROPHORETIC WEB MACHINE SERVO DRIVE SYSTEM. NOV. 16, 1976. BEL. 0841079.
4,049,343.—COMBINATION IMAGING AND GROUNDING ROLLER. SEPT. 20, 1977. BEL. 841076, FRA. 7612176.
4,059,443.—ELECTRICAL INFORMATION STORAGE SYSTEM. NOV. 22, 1977.
4,073,583.—PHOTOELECTROPHORETIC HEAT & PRESSURE TRANSFER MECHANISMS. FEB. 14, 1978. BEL. 841078, FRA. 7612171.
4,084,896.—PHOTOELECTROPHORETIC WEB IMAGING APPARATUS. APR. 18; 1978. BEL. 841077, FRA. 7612178.

Class 12I

3,681,064.—PHOTELCTROPHRTC IMNG PROCS EMPLYNG MULTI-COMPNT ELCTRCLY PHOTOSNTV PARTICLE. AUG. 1, 1972.
3,820,987.—PHOTOELECTROPHORETIC IMAGING WITH FIXING ON A SEPARATE ELECTRODE. JUNE 28, 1974.
4,172,721.—DYE-AMPLIFIED IMAGING PROCESS. OCT. 30, 1979. AUS. 494739, BEL. 822400, CAN. 1033041, FRA. 7438506, GER. 7438730, GRB. 1484706, ITL. 1025877, SPN. 432205, SWD. 74144650.

Class 12J

3,642,364.—TRANSFER APPARATUS. FEB. 15, 1972. AUS. 0455718, BEL. 0758808, CAN. 0918412, CZC. 0164906, EGR. 0087486, FRA. 7041650, GRB. 1336720, HUN. 0169308, ITL. 0909310, PLD. 0082862, SPN. 0385456, STZ. 0518581, USR. 0406387.
3,791,823.—PHOTOELECTROPHORETIC IMAGING TRANSFER METHOD. FEB. 12, 1974.
3,861,911.—IMAGING FIXING METHOD. JAN. 21, 1975.
3,897,143.—IMAGING SYSTEM. JULY 29, 1975.
4,065,304.—METHOD FOR FIXING INK IMAGES. DEC. 27, 1977. BEL. 848487.

Class 12K

3,510,419.—PHOTOELECTROPHORETIC IMAGING METHOD. MAY 5, 1970. ARG. 0165519, AUS. 0425666, BEL. 0717829. CAN. 0876044, FRA. 0095234, GRB. 1242262, ITL. 0896927, JAP. 0657876, MEX. 0102064, PNM. 0001975, PRU. 0010174, VZL. 0023693.
3,561,864.—ELECTROPHORETIC COATING DEVICE. FEB. 9, 1971. ARG. 0174608, ATR. 0302815, AUS. 0447649, BEL. 0739544, CAN. 0890357, FRA. 6933095, GER. 1949861, GRB. 1277806, ITL. 0873705, JAP. 0686763, MEX. 0113013.
3,609,029.—MATERIALS APPLICATION APPARATUS. SEPT. 28, 1971. BEL. 0772565, CAN. 0953097, FRA. 7133987, GRB. 1366382, ITL. 0936510.
3,619,053.—PHOTOELECTROPHORETIC IMAGING SYSTEM. NOV. 9, 1971. GRB. 1324102, JAP. 0759477.
3,620,948.—PHOTOELECTROPHORETIC IMAGING SYSTEM EMPLOYING PRELIMINARY ELECTROPHRIC DSPSTN OF IMAGNG SUSPENS. NOV. 16, 1971. ATR. 0326480, AUS. 0447819, BEL. 0739754, CAN. 0899137, FRA. 6933734, GRB. 1280027, HOL. 0146951, ITL. 0877872, JAP. 0709041, MEX. 0114889, SPN. 0372065, STZ. 0508232, SWD. 0341929, VZL. 0015070.
3,645,874.—IMAGE DENSITY CONTROL IN PHOTOELECTROPHORETIC IMAGING. FEB. 29, 1972. BEL. 0756899, CAN. 0922957, FRA. 7035803, GRB. 1331621, ITL. 0908434, JAP. 0743836.
3,658,687.—APPARATUS FOR FORMING IMAGES WITH APPLICATOR SHEARING SMOOTHING AND

CLEANING MEANS. APR. 25, 1972. CAN. 0916433, GRB. 1337149, JAP. 0751881.
3,695,755.—PHOTOELECTROPHORETIC CAMERA. OCT. 3, 1972. CAN. 0958580, GRB. 1359694.
3,744,896.—IMAGING SYSTEM. JULY 10, 1973.
3,769,009.—INKING SYSTEM FOR LIQUID PARTICLE MIGRATION ON AUTOMATIC MACHINE. OCT. 30, 1973. HOL. 7216013.
3,938,088.—CHARACTER CODING AND RECOGNITION SYSTEM. FEB. 10, 1976.
3,944,353.—BACKGROUND REDUCTION. MAR. 16, 1976.
3,968,271.—COATING APPARATUS AND USE THEREOF. JULY 6, 1976.
3,993,020.—BLADE APPLICATOR ASSEMBLY. NOV. 23, 1976.
4,019,816.—COATING SYSTEM HAVING A COMPOSITE APPLICATOR ASSEMBLY PROVIDED WITH A RECIPROCATING BLADE. APR. 26, 1977.

Class 12L

3,622,691.—HIGH SPEED LIGHT RESPONSIVE TRANSFORM COMPUTER FOR A LIGHT-SENSITIVE PRINTING SYSTEM. NOV. 23, 1971. CAN. 0915813, GRB. 1335222, JAP. 0774709.
3,649,515.—PHOTOGRAPHIC MASKING SYSTEM. MAR. 14, 1972. CAN. 0936733, GRB. 1349610, JAP. 0774711.
3,715,209.—ELECTRICAL COLOR MASKING FOR A PHOTOELECTROPHORETIC IMAGING PROCESS. FEB. 6, 1973. BEL. 0763539, CAN. 0938491, FRA. 7107557. GRB. 1347139, ITL. 0918979, JAP. 0752723, MEX. 0120935.
3,810,758.—PHOTOGRAPHIC MASKING SYSTEM. MAY 14, 1974.

Class 12M

RE.27,117.—METAL FREE PHTHALOCYANINE IN THE NEW X-FORM-RE OF 3,357,989-D1170. APR. 20, 1971.
3,384,632.—ARYLAZO-4-ISOPROPOXY-1-NAPHTHOL COMPOUNDS. MAY 21, 1968. BEL. 0743897, CAN. 0787920, FRA. 1473703, GER. 1644400, GRB. 1145374, ITL. 0764015, JAP. 0578398.
3,402,177.—SUBSTITUTED 1-CYANO-2, 3-PHTHALOYL-7, 8-BENZOPYRROCOLINES. SEPT. 17, 1968. AUS. 0435189, BEL. 0743896, CAN. 0812820, GRB. 1145373.
3,432,415.—ELECTROPHORETIC IMG. PROCESS USING PHOTOSENSITIVE XANTHENONIUM SALTS. MAR. 11, 1969. AUS. 0439502, BEL. 0743895, CAN. 0851118, GER. 1522701, GRB. 1155747, JAP. 0650631, MEX. 0104632.
3,442,781.—PHOTOELECTROPHORETIC AND XEROGRAPHIC IMG. PROC. EMPL. TRIPHENODLOXAZINES AS ELECTRIC. PHOTOSENSIT. MAY 6, 1969. AUS. 0445582, BEL. 0743894, CAN. 0855152, GRB. 0175452, JAP. 0611634.
3,445,227.—ELECTROPHOTOGRAPHIC IMAGING PROCESSES EMPLOYING 2,4 DIAMINOTRIAZINES AS ELCTRCLY PHOTOSNSTV PRT. MAY 20, 1969. BEL. 0743891, CAN. 0852681, GER. 1522687, GRB. 1146019, JAP. 0617789.
3,447,922.—ELECTRICALLY PHOTOSENSITIVE PARTICLES USEFUL IN PHOTOELECTROPHORETIC AND XEROGRAPHIC IMAGING PROC. JUNE 3, 1969.
3,448,028.—N-SBSTUD-8,13-DIOXODINAPHTHO-2-1-B,2,3-D-FURAN-6-CARBOXAMIDES AS ELCTLY PTOSNSTV MTLS IN ELCPHG. JUNE 3, 1969.
3,448,029.—ELECTROPHORETIC IMAGING PROCESS USING 8,13-DIOXODINAPHTO-2,1-B,2,3-D-FURAN-6-CARBOXAMIDE PIGMEN. JUNE 3, 1969.
3,448,030.—ELECTRICALLY PHOTOSENSITIVE PART. USEFUL IN PHOTOELECTROPHORETIC AND XEROGRAPHIC IMAGING PROCESSE. JUNE 3, 1969. AUS. 0445639, BEL. 0743893, CAN. 0943830, GRB. 1155554, JAP. 0686735.
3,474,020.—PHOTOELECTROPHORETIC IMAGING PROCESS USING QUINACRIDONES. OCT. 21, 1969. ARG. 0154377, AUS. 0414491, BEL. 0683405, CAN. 0834673, FRA. 0090574, GRB. 1155403, ITL. 0842587, JAP. 0601872, MEX. 0088935, SPN. 0328503, SWD. 6608734, VZL. 0023989.
3,478,064.—1,5-BIS-SUBSTITUTED ALKYLAMINO-ANTHRAQUINONES. NOV. 11, 1969. ARG. 0145636, AUS. 0419687, BEL. 0683222, CAN. 0880309, FRA. 1484968, GRB. 0155985, ITL. 0771955, JAP. 0581828, MEX. 0092775, SPN. 0328428, STZ. 0461273, SWD. 0328188, VZL. 0021224.
3,485,633.—ELECTROPHORETIC IMG PROC EMPL METALLIC LAKES OF FLUORESCEIN DERIVATIVES AS ELECTRICLY PHOTOSENS. DEC. 23, 1969. AUS. 0444394, BEL. 0743641, CAN. 0848386, GER. 1572387, GRB. 1190965, JAP. 0586923.
3,492,308.—PROCESS FOR PREPARING METAL FREE PHTHALOCYANINES - SYNTHESIS OF METAL-FREE PHTHALOCYANINE. JAN. 27, 1970. CAN. 0922708, GRB. 1216887, JAP. 0586926.
3,492,309.—SYNTHESIS OF ALPHA METAL-FREE PHTHALOCYANINE. JAN. 27, 1970. CAN. 0894803, GRB. 1206306, JAP. 0604155.
3,531,309.—COMPOSITIONS COMPRISING 1-CYANO-2,3-PHTHALOYL-7,8-BENZOPYRROCOLINES AND A CARRIER. SEPT. 29, 1970.
3,546,085.—PHOTOELECTROPHORETIC IMAGING PROCESS AND SUSPENSION. DEC. 8, 1970. BEL. 0710052, CAN. 0875493, FRA. 1568088, GER. 1622380, GRB. 1208812, ITL. 0823929, JAP. 0594741.
3,560,360.—PHOTOELECTROPHORETIC IMAGING PROCESS AND ANTHRAQUINONES AS THE ELECTRICALLY PHOTOSENSITIVE PARTIC. FEB. 2, 1971. CAN. 0850590, MEX. 0096584.
3,562,248.—BISAZO PGMTS DRVD CPLRS OBTD CONDG 8-AMINO-2-NAPHTHOLS W/ DICARBOXYLIC ACID CHLORIDES. FEB. 9, 1971. ATR. 0302037, AUS. 0435392, BEL. 0743422, CAN. 0889836, FRA. 6944290, GER. 1717183, GRB. 1217905, ITL. 0879047, JAP. 0608727.
3,574,182.—CALCIUM SALT OF 6-BROMO-1-1-SULFO-2-NAPHTHYLAZO-2-NAPHTHOL. APR. 6, 1971. ARG. 0168131, ATR. 0302812, AUS. 0429649, BEL. 0710053, CAN. 0878483, CHL. 0024254, CLB. 0018785, DNK. 0128493, FIN. 0049711, FRA. 1556484. GRB. 1197374, GRK. 0036648, IND. 0114221, ISR. 0029376, ITL. 0823989, JAP. 0605213, LXB. 0055364, MEX. 0099564, NOR. 0129593, NZL. 0151403, PRU. 0009483, PTG. 0049036, SAF. 0068559, SPN. 0349965, STZ. 0524844, SWD. 0351737, URG. 0008893, VZL. 0032776.
3,594,163.—METHOD OF CONVERTING ALPHA PHTHALOCYANINE TO THE X FORM. JULY 20, 1971.
3,615,558.—PHOTOELECTROPHORETIC IMAGING PROCESS EMPLOYING A FINELY-DIVIDED PHTHALOCYANINE PIGMENT. OCT. 26, 1971. CAN. 0850022.
3,616,393.—PHOTOELECTROPHORETIC IMAGING PROCESS EMPLOYING A PIGMENT HAVING THE FORMULA RNS. OCT. 26, 1971.
3,634,221.—PIGMENT RECLAIMING. JAN. 11, 1972. BEL. 0744760, CAN. 0921427, FRA. 7001822, GRB. 1301382, ITL. 0886625.
3,635,981.—PHOTOELECTROPHORETIC IMAGING PIGMENT COMPOSITION AND PROCESS. JAN. 18, 1972. ARG. 0193337, ATR. 0305459, AUS. 0448778, BEL. 0741064, CAN. 0953143, FRA. 6937772, GER. 1955001, GRB. 1285610, ITL. 0879711, JAP. 0685461, MEX. 0114879.
3,645,883.—PHTELCTRPHRTC IMGNG APRTUS EMPLYNG PHTSNSTV PRTCLS EXHBTG FATIGUE CHARACTERISTICS. FEB. 29, 1972.
3,652,438.—PHTELCTRPHRTC IMGNG PROCS USNG DIVLNT HVY MTL SLT OR 1-1-SULFO-2-NAPHYLZO-2-NAPHLS AS IMGNG MAT. MAR. 28, 1972.
3,658,675.—PHOTOELECTROPHORETIC IMAGING PROCESS USING BISAZO PIGMENTS. APR. 25, 1972.
3,692,517.—PHOTOELECTROPHORETIC IMAGING PROCESS EMPLOYING AN INSULATING CARRIER LQD CNTNG UNSATURATED COMP. SEPT. 19, 1972. ARG. 0164485, AUS. 0430397, BEL. 0715670, CAN. 0913968, FRA. 1563583, GER. 1772522, GRB. 1225316, ITL. 0834948, JAP. 0641521, MEX. 0100255, VZL. 0032921.
3,705,901.—PHOTOELECTROPHORETIC IMAGING COMPOSTION. DEC. 12, 1972.
3,753,708.—PHOTOELECTROPHORETIC IMAGING PROCESS EMPLOYING QUINACRIDONE PIGMENTS. AUG. 21, 1973.
3,758,305.—PHOTOELECTROPHORETIC IMAGING PROCESS. SEPT. 11, 1973.
3,825,422.—IMAGING PROCESS. JULY 23, 1974. CAN. 0984201, GRB. 1442667.
3,867,141.—PHOTOELCTRC AND ELCTRPHOTGRPHC PGMNTS COMPRISNG DERIVATIVS OF CNDNSD PLYCLC AROMTC HYDROCRBN ALDE. FEB. 18, 1975.
3,922,169.—PHOTOELECTRIC AND ELECTROPHOTOGRAPHIC PIGMENTS COMPRISING DERIVATIVES OF CONDENSED POLYCYCLIC A. NOV. 25, 1975.
3,923,506.—PHOTOELECTRIC AND ELECTROPHOTOGRAPHIC PIGMENTS COMPRISING DERIVATIVES OF CONDENSED POLYCYCLIC A. DEC. 2, 1975.
3,953,462.—IMAGING PROCESS. APR. 27, 1976. ARG. 0202139, BEL. 0821400, GRB. 1467999.
3,957,829.—CERTAIN DINAPHTHO (1,2-B;2',3'-D)-FURAN-7,12 DIONES. MAY 18, 1976.
4,012,252.—IMAGING PROCESS UTILIZING 3-BROMO-N-2"-PYRIDYL-8,13-DIOXODIMAPHTHO-(2,1-; 3',3'-)

FURON-6-CARBO. MAR. 15, 1977. ARG. 0202139, BEL. 0821400, GRB. 1467999.
4,017,311.—PHOTOELECTROPHORETIC IMAGING SUSPENSION. APR. 12, 1977.
4,032,339.—PHOTOSENSITIVE COMPOSITION CONTAINING VANADYL PHTHALOCYANINE FOR PHOTOELECTROPHORECTIC IMAGING. JUNE 28, 1977.
4,062,854.—PROCESS FOR PREPARING N-SUBSTITUTED-8,13-DIOXODINAPHTHO-(2,1-B; 2,3-D)FURAN-6-CARBOXAMIDE. DEC. 13, 1977. CAN. 1023360, FRA. 7423881.
4,076,527.—PHOTOSENSITIVE COMPOSITION USEFUL IN PHOTOELECTROPHORETIC IMAGING. FEB. 28, 1978.
4,104,064.—PHOTOELECTROPHORETIC IMAGING METHOD EMPLOYING DINAPHTHO-FURANDIONE PIGMENTS. AUG. 1, 1978.

Class 12N

3,446,722.—ELECTROPHORETIC REFINING OF PHOTOSENSITIVE PARTICLES. MAY 27, 1969. AUS. 0424699, BEL. 0743903, CAN. 0840368. GER. 1622376, GRB. 1189636.
3,473,940.—PREPARATION OF PHOTOELECTROPHORETIC IMAGING SUSPENSION. OCT. 21, 1969. BEL. 0743899, CAN. 0847808, FRA. 1524448, GER. 1572386, GRB. 1161780, ITL. 0794432, JAP. 0594583, MEX. 0097623.
3,477,934.—IMAGING PROCESS. NOV. 11, 1969. ARG. 0158372, AUS. 0416251, BEL. 0700645, CAN. 0850023, FRA. 1550998, GRB. 1196044, ITL. 0804665, JAP. 0725097, MEX. 0098737, SPN. 0342376, STZ. 0481408, SWD. 0336525, VZL. 0021263.
3,551,313.—IMAGE CONTRAST CONTROL IN PHOTOELECTROPHORETIC IMAGING - PHAROS CONTRAST CONTROL. DEC. 29, 1970. ATR. 0302814, AUS. 0448317, BEL. 0738218, CAN. 0899689, FRA. 6929449, GER. 1944510, GRB. 1274525, ITL. 0871538, JAP. 0708365, SWD. 0341130.
3,553,093.—COLOR PHOTOELECTROPHORETIC IMAGING PROCESS. JAN. 5, 1971. ATR. 0286783, AUS. 0416331, BEL. 0692911, CAN. 0818388, FRA. 1471745, GER. 1522743, GRB. 1149665, IND. 0104183, ISR. 0025304. ITL. 0762674, JAP. 0608337, MEX. 0089790, NOR. 0123368, NZL. 0144531, STZ. 0479099, SWD. 0334540.
3,586,615.—PHOTOELECTROPHORETIC IMAGING PROCESS INCLUDING THE USE OF AN ELECTRICALLY CHRGD SUSPNSN COATNG. JUNE 22, 1971. BEL. 0743921, CAN. 0891972, FRA. 6945567, GER. 1965460, GRB. 1284429, HOL. 1284429, ITL. 0880418, JAP. 0729281.
3,595,770.—SEQUENTIAL PHOTOELECTROPHORETIC IMAGING SYSTEM. JULY 27, 1971. ARG. 0176384, ATR. 0299697, AUS. 0429715, BEL. 0722300, BRA. 0087996, CAN. 0891970, CHL. 0024332, DNK. 0126879, FRA. 1589548, GRB. 1239259, ITL. 0845021, LXB. 0057101, MEX. 0103850, NZL. 0154114, PNM. 0001418, PTG. 0050485, SAF. 0686705, SPN. 0359239, STZ. 0496265, SWD. 0339172, URG. 0009317, VZL. 0023705.
3,601,483.—IMAGING APPARATUS. AUG. 24, 1971.
3,607,256.—FULLY-ENCLOSED ELECTROPHORETIC IMAGING SYSTEM. SEPT. 21, 1971.
3,616,390.—ELECTROPHORETIC IMAGING METHOD CHARACTERIZED BY EXPOSURE OF ELECTRCLY PHOTSNSTV PRTCLS AT LIQUI. OCT. 26, 1971. ATR. 0322980, AUS. 0448380. BEL. 0743423, CAN. 0890356, FRA. 6944288, GER. 1947105, GRB. 1249546, ITL. 0879048, JAP. 0688351.
3,616,395.—PHOTOELECTROPHORETIC IMAGING WITH CORONA FIELD APPLICATION. OCT. 26, 1971. CAN. 0922142, GRB. 1318565, JAP. 0756962.
3,620,950.—ELECTROPHORETIC IMAGING EMPLOYING PERIODIC ELECTROMAGNETIC RADIATION. NOV. 16, 1971. ATR. 0302045, AUS. 0449606, BEL. 0739750, CAN. 0887022, FRA. 5934262, GRB. 1283384, ITL. 0877875, JAP. 0718339.
3,634,221.—PIGMENT RECLAIMING. JAN. 11, 1972. BEL. 0744760, CAN. 0921427, FRA. 7001822, GRB. 1301382, ITL. 0886625.
3,642,598.—PHOTOELECTROPHORETIC IMAGING METHOD AND APPARATUS. FEB. 15, 1972. ARG. 0188632, BEL. 0756481, CAN. 0922144, FRA. 7034709, GRB. 1324105, ITL. 0908073, JAP. 0740359, MEX. 0115601, VZL. 0032786.
3,645,874.—IMAGE DENSITY CONTROL IN PHOTOELECTROPHORETIC IMAGING. FEB. 29, 1972. BEL. 0756899, CAN. 0922957, FRA. 7035803, GRB. 1331621, ITL. 0908434, JAP. 0743836.
3,645,883.—PHTELCTRPHRTC IMGNG APRTUS EMPLYNG PHTSNSTV PRTCLS EXHBTG FATIGUE CHARACTERISTICS. FEB. 29, 1972.
3,647,659.—PHTELCTRPHRTC IMGNG PRCS WHEREIN IMGNG ELCTRCL FLD APPLD SUBSEQUENT TO IMAGE WISE EXPOSURE. MAR. 7, 1972. BEL. 0772912, CAN. 0958581, FRA. 7134730, GRB. 1354798, ITL. 0936734.
3,657,091.—ELECTROPHORETIC IMAGING METHOD EMPLOYING A PERIODIC ELECTRIC FIELD. APR. 18, 1972. ARG. 0174612, ATR. 0302816, AUS. 0448524, BEL. 0739752, CAN. 0913970, FRA. 6933735, GRB. 1282469, ITL. 0889439, JAP. 0709039, MEX. 0114739.
3,663,396.—KINESCOPE PHOTOELECTROPHORETIC IMAGING METHODS AND SYSTEMS. MAY 16, 1972. ARG. 0196858, BEL. 0762417, CAN. 0935965, FRA. 7104350, GRB. 1345571, ITL. 0918121, JAP. 0743838, MEX. 0131834.
3,664,941.—PHTELCTRPHRTC REVERSAL IMGNG USNG SUSPENSION CONTAINING VITAMIN PRECURSOR, B-CAROTENE. MAY 23, 1972.
3,666,472.—ELECTROPHORETIC IMAGING COMPOSITION - IMPROVEMENT OF PHAROS POLYCHROME IMAGING SYSTEM. MAY 30, 1972. ATR. 0302042, AUS. 0455711, BEL. 0739753, CAN. 0899138, FRA. 6933736, GRB. 1279284, HOL. 0147548, ITL. 0889440, JAP. 0709040, MEX. 0116450.
3,669,872.—IMAGING SYSTEM. JUNE 13, 1972.
3,676,313.—REMOVING UNDESIRED POTENTIAL FROM BLOCKING ELECTRODE IN A PHOTOELECTROPHORETIC IMAGING SYSTEM. JULY 11, 1972.
3,681,221.—PHOTOELECTROPHORETIC IMAGING BY PHOSPHORESCENCE. AUG. 1, 1972. CAN. 0935013, GRB. 1348121.
3,696,020.—ELECTROPHORETIC IMGNG APRTS INCLUDING MEANS TO COAT AND ELCTRFY IMGNG ELCTRODE. OCT. 3, 1972.
3,723,288.—ELECTROPHORETIC IMAGING APPARATUS INCLUDING MEANS TO PROJECT AN IMAGE AT A LIQUID NIP. MAR. 27, 1973.
3,737,310.—BACKGROUND REDUCTION. JUNE 5, 1973.
3,741,639.—PHOTOELECTROPHORETIC IMAGING BY PHOSPHORESCENCE. JUNE 26, 1973.
3,741,760.—IMAGING SYSTEM. JUNE 26, 1973.
3,748,035.—METHOD FOR SEQUENTIAL ILLUMINATION IN A POLYCHROME PROCESS. JULY 24, 1973. CAN. 0960288, GRB. 1416328.
3,772,013.—PHOTOELECTROPHORETIC IMAGING PROCESS EMPLOYING ELECTRICALLY PHOTOSENSITIVE PARTICLES AND INERT PA. NOV. 13, 1973. ARG. 0196295, ATR. 0327682, BEL. 0777724, CAN. 0957543, FRA. 7200998, GRB. 1370026, ITL. 0946356, JAP. 0759477, MEX. 0124561, SPN. 0398586, SWD. 0367075, VZL. 30687.
3,782,932.—ELECTROPHORETIC IMAGING PROCESS USING TRANSPARENT PARTICLES. JAN. 1, 1974. ATR. 0302043, AUS. 0446066, BEL. 0743424, CAN. 0913441, FRA. 6944289, GER. 1949149, GRB. 1280900, ITL. 0897053. JAP. 0699518.
3,785,816.—ELIMINATING CORONA ARCING IN PHOTOELECTROPHORETIC IMAGING. JAN. 15, 1974.
3,787,206.—PHOTOELECTROPHORETIC IMAGING METHOD INCLUDING AT LEAST ONE ELECTRODE CARRYING A PATTERN. JAN. 22, 1974.
3,801,195.—ELECTROPHORETIC IMAGING. APR. 2, 1974. ARG. 0174613, ATR. 0293874, AUS. 0455712, BEL. 0739747, CAN. 0922141, FRA. 6933738, GER. 1949416, GRB. 1279285, HOL. 0146950, ITL. 0877873, JAP. 0709042, MEX. 0108820.
3,804,620.—METHOD OF PRODUCING PLANOGRAPHIC PLATES BY PHOTOELECTROPHORETIC IMAGING. APR. 16, 1974.
3,811,764.—APPARATUS FOR PHOTOELECTROPHORETIC IMAGING USING A PERIODIC ELECTRIC FIELD. MAY 21, 1974.
3,850,627.—ELECTROPHORETIC IMAGING METHOD. NOV. 26, 1974. BEL. 0777719, FRA. 7201005, GRB. 1376241, ITL. 0946357.
3,857,549.—PHOTOELECTROPHORETIC IMAGING APPARATUS. DEC. 31, 1974.
3,857,707.—PHOTOELECTROPHORETIC IMAGING PROCESS USING DRY PIGMENT COATED SUBSTRATE. DEC. 31, 1974.
3,881,920.—PHOTOELECTROPHORETIC IMAGING PROCESS. MAY 6, 1975.
3,901,701.—PHOTOELECTROPHORETIC IMAGING PROCESS USING PHOTOCONDUCTIVE ELECTRODE WHICH ALTERS SPECTRAL RESPONSE. AUG. 26, 1975.

3,905,812.—IMAGING PROCESS. SEPT. 16, 1975. FRA. 7413994, GRB. 1443121.
3,920,330.—ELECTROPHORETIC IMAGING APPARATUS. NOV. 18, 1975. BEL. 0777719, CAN. 0961334, FRA. 7201005, GRB. 1376241, ITL. 0946357.
3,933,487.—IMAGING COMPOSITION FOR PHOTOELECTROPHORETIC IMAGING SYSTEM. JAN. 20, 1976. CAN. 0973005, GRB. 1375941.
3,954,465.—ELECTROPHORETIC IMAGING METHODS. MAY 4, 1976. BEL. 0777719, FRA. 7201005, GRB. 1376241, ITL. 0946357.
3,961,949.—PHOTOELECTROPHORETIC IMAGING METHOD PRODUCING A DESIRED IMAGE BORDER. JUNE 8, 1976.
3,967,960.—PHOTOELECTROPHORETIC IMAGING PROCESS EMPLOYING DARK CHARGE INJECTING ELEMENT. JULY 6, 1976.
4,023,968.—PHOTOELECTROPHORETIC COLOOR IMAGING PROCESS IN WHICH BACK MIGRATION IS ELIMINATED. MAY 17, 1977.
4,069,047.—TRANSFER OF PHOTOELECTROPHORETIC IMAGES. JAN. 17, 1978.
4,078,928.—PHOTOELECTROPHORETIC IMAGING SYSTEM. MAR. 14, 1978.
4,172,721.—DYE-AMPLIFIED IMAGING PROCESS. OCT. 30, 1979. AUS. 494739, BEL. 822400, CAN. 1033041, FRA. 7438506, GER. 7438730, GRB. 1484706. ITL. 1025877, SPN. 482205, SWD. 74144650.

Class 12O

3,647,660.—PHOTOELECTROPHORETIC IMAGING METHOD EMPLOYING A HALOGEN CONTAINING SUSPENSION. MAR. 7, 1972.
3,869,286.—PHOTOELECTROPHORETIC IMAGING WITH COPPER-FREE CHLOROPHYLL IN THE CARRIER LIQUID. MAR. 4, 1975.

Class 12P

RE.28,260.—ELECTROPHORETIC IMAGING PROCESS INCLUDING APPL OF DYNAMIC STRESS ON THE PARTICLE SUSPENSION. DEC. 3, 1974. ARG. 0174614, ATR. 0302044, AUS. 0448318, BEL. 0739748, CAN. 0890358, FRA. 6934260, GER. 1949148, GRB. 1282736, HOL. 0146301, ITL. 0877874, JAP. 0718340, MEX. 0108886.
3,595,772.—METHOD OF BREAKING PARTICLE AGGLOMERATES IN THE PHOTO-ELECTROPHORETIC IMAGING SYSTEM. JULY 27, 1971. ARG. 0176808, ATR. 0293875, AUS. 0445175, BEL. 0739749, CAN. 0912398, FRA. 6934261, GRB. 1290370, ITL. 0887503, JAP. 0712831, MEX. 0127747.
3,616,391.—ELECTROPHRTC IMGNG PRCSS INC APPLCTN OF DYNAMIC STRESS ON PARTCL SUSPSN-REISSUED D 2177R. OCT. 26, 1971. ARG. 0174614, ATR. 0302044, AUS. 0448318, BEL. 0739748, CAN. 0890358, FRA. 6934260, GER. 1949148, GRB. 1282736, HOL. 0146301, ITL. 0877874, JAP. 0718340, MEX. 0108886.
3,666,472.—ELECTROPHORETIC IMAGING COMPOSITION - IMPROVEMENT OF PHAROS POLYCHROME IMAGING SYSTEM. MAY 30, 1972. ATR. 0302042, AUS. 0455711, BEL. 0739753, CAN. 0899138, FRA. 6933736, GRB. 1279284, HOL. 0147548, ITL. 0889440, JAP. 0709040, MEX. 0116450.
3,743,404.—PHTOELECTROPHORETIC IMGNG APPTS INCNG MEANS TO SIMULTNUSLY APPLY COMPRSVE STRESS AND SHEAR TO IMGNG. JULY 3, 1973.
3,784,302.—ELECTROPHORETIC IMAGE APPARATUS INCLUDING APPLICATION OF DYNAMIC STRESS ON THE PARTICLE SUSPENS. JAN. 8, 1974.
3,833,493.—IMAGING PROCESS. SEPT. 3, 1974.
3,943,049.—APPARATUS FOR SEPARATING AGGLOMERATED PARTICLES WITH SUSPENSION. MAR. 9, 1976.

Class 12Q

3,642,364.—TRANSFER APPARATUS. FEB. 15, 1972. AUS. 0435718, BEL. 0758808, CAN. 0918412, CZC. 0164906, EGR. 0087486, FRA. 7041650, GRB. 1336720, HUN. 0169308, ITL. 0909310, PLD. 0082862, SPN. 0385455, STZ. 0518581, USR. 0406387.
3,655,370.—PHOTOELECTROPHORETIC IMAGE TRANSFER. APR. 11, 1972.
3,705,797.—FIXING PROCESS FOR PHOTOELECTROPHORETIC IMAGING. DEC. 12, 1972.
3,711,196.—IMAGE TRANSFER. JAN. 16, 1973.
3,791,823.—PHOTOELECTROPHORETIC IMAGING TRANSFER METHOD. FEB. 12, 1974.
3,804,508.—PHOTOELECTROPHORETIC APPARATUS FOR HEAT FACING AN IMAGE. APR. 16, 1974.
3,897,143.—IMAGING SYSTEM. JULY 29, 1975.
4,065,304—METHOD FOR FIXING INK IMAGES. DEC. 27, 1977. BEL. 848487.

Class 12R

3,574,614.—PROCESS OF PREPARING MULTIPLE COPIES FROM A XEROPRINTING MASTER. APR. 13, 1971. ATR. 0305769, AUS. 0448396, BEL. 0743660, CAN. 0882599, FRA. 6944513, GRB. 1209060, ITL. 0899118, JAP. 0710908.
3,607,256.—FULLY-ENCLOSED ELECTROPHORETIC IMAGING SYSTEM. SEPT. 21, 1971.
3,682,628.—PHOTOELECTROPHORETIC FACSIMILE TRANSMISSION. AUG. 8, 1972. CAN. 0957889, GRB. 1365163.
3,800,302.—RECORDING OSCILLOGRAPH UTILIZING PHOTOELECTROPHORETIC TECHNIQUES. MAR. 26, 1974.
3,849,132.—PHOTOELECTROPHORETIC IMAGING METHOD EMPLOYING A CHROMOGENIC REACTION. NOV. 19, 1974. BEL. 0809399, GRB. 1447104.
3,938,088.—CHARACTER CODING AND RECOGNITION SYSTEM. FEB. 10, 1976.

Class 15

3,693,517.—PRINTING APPARATUS—KALEIDOSCOPE PRINTER WITH CIRCUMFERENTIAL STRIPS. SEPT. 26, 1972. CAN. 0948265, GRB. 1330327.
3,801,319.—IMAGING METHOD UTILIZING CHEMICAL REACTIVITIES OF PHOTOEXCITED STATES OF AROMATIC HYDROXY COMPD. APR. 2, 1974. CAN. 1000549, GRB. 1429501.
3,847,644.—IMAGING BY PHASE AGGREGATION FROM BLOCK COPOLYMERS. NOV. 12, 1974.
3,851,584.—CHEMICAL REPRODUCTION SYSTEMS. DEC. 3, 1974.
3,888,670.—IMAGING METHOD. JUNE 10, 1975.
3,915,706.—IMAGING SYSTEM BASED ON PHOTODEGRADABLE POLYALDEHYDES. OCT. 28, 1975.
3,923,514.—METHOD FOR THE PREPARATION OF RELIEF PRINTING MASTERS. DEC. 2, 1975.
3,929,477.—IMAGE PRODUCING TECHNIQUES OF SUPERCONDUCTING MATERIAL IN A MAGNETIC FIELD. DEC. 30, 1975.
3,930,858.—HEAT DEVELOPMENT PROCESS UTILIZING A PHOTOSENSITIVE COMPOSITION CONTAINING A HALOGENATED POLYME. JAN. 6, 1976.
3,963,491.—IMAGING METHOD. JUNE 15, 1976.
3,986,874.—DRIOGRAPHIC IMAGING METHOD. OCT. 19, 1976.
3,990,043.—CHARACTER CODING AND RECOGNITION SYSTEM. NOV. 2, 1976.
4,009,466.—CHARACTER CODING AND RECOGNITION SYSTEM. FEB. 22, 1977.
4,032,980.—RECORDED MAGNETIC MEMBER VIEWING APPARATUS. JUNE 28, 1977.
4,043,298.—MAGNETIC TONER SCAVENGING SYSTEM. AUG. 23, 1977.
4,064,453.—MAGNETIC FIELD DETECTOR. DEC. 20, 1977.
4,074,276.—MAGNETIC IMAGING SYSTEM USING HEAT. FEB. 14, 1978.
4,076,387.—MAGNETIC DISPLAY. FEB. 28, 1978.
4,089,684.—IMAGING METHOD UTILIZING THE CHEMICAL REACTIVITY OF DONOR-ACCEPTOR MIXTURES. MAY 16, 1978.
4,095,233.—METHOD FOR FORMING A CHARGE PATTERN. JUNE 13, 1978.
4,100,088.—IMAGING COMPOSITION. JULY 11, 1978.
4,101,943.—CONTROLLED-WIDTH-SYNCHRONIZATION OF RECORDED PIXELS. JULY 18, 1978.
4,115,786.—CONSTANT WAVELENGTH MAGNETIC RECORDINO. SEPT. 19, 1978.
4,133,683.—AGGLOMERATION IMAGING METHOD. JAN. 9, 1979.
4,135,194.—ROTARY HEAD MAGNETIC RECORDING AT FIXED WAVELENGTH WITH VARYING SPEEDS. JAN. 16, 1979.
4,172,721.—DYE-AMPLIFIED IMAGING PROCESS. OCT. 30, 1979. AUS. 494739, BEL. 822400, CAN 1033041, FRA. 7438506, GER. 7438730, GRB. 1484706, ITL. 1025877, SPN. 432205, SWD. 74144650.
4,175,836.—METHOD AND APPARATUS FOR FORMING VISIBLE IMAGES. NOV. 27, 1979. GRB. 1558014.
4,181,426.—RANDOM-DUMP STORAGE BUFFER FOR MOVING WEB. JAN. 1, 1980. GRB. 1554696.

4,199,766.—RANDOM-DUMP STORAGE BUFFER FOR MOVING WEB. APR. 22, 1980. GRB. 1554696.

Class 15A

3,320,060.—DEFORMATION IMAGE REPRODUCTION PROCESS UTILIZING A VOLTAGE THRESHOLD REDUCING SURFACTANT. MAY 16, 1967. CAN. 0807325, FRA. 1416119, GER. 1261867, GRB. 1097919, ITL. 0739830, JAP. 0519668.
3,338,710.—FROST THERMOGRAPHY. AUG. 29, 1967.
3,404,001.—THERMOPLASTIC DEFORMATION IMAGING WITH COLOR REAGENTS. OCT. 1, 1968. CAN. 0801265, FRA. 1459100, GER. 1497214, GRB. 1124925, ITL. 0725974, JAP. 0529727.
3,615,387.—STRIPPABLE LAYER RELIEF IMAGING PROCESS. OCT. 26, 1971. CAN. 0887033.
3,697,184.—APPARATUS FOR EVALUTING THE RECORDINO CHARACTERISTICS OF A THERMOPLASTIC PHOTORECEPTOR. OCT. 10, 1972. CAN. 1083484, GRB. 1389471.
3,715,207.—ELCTRSTCLY DEFORMABLE THERMOPLASTIC LAYER CONTAINING A 1,4-DIALKYLAMINO-9, 10-ANTHRAQUINONE DYE. FEB. 6, 1973.
3,729,310.—SURFACE DEFORMABLE IMAGING PROCESS AND MEMBER. APR. 24, 1973.
3,741,759.—FROST IMAGING PROCESS. JUNE 26, 1973.
3,795,514.—DEFORMATION IMAGING METHOD. MAR. 5, 1974.
3,869,612.—COPY APPARATUS WITH MEANS TO EFFECT VISIBLE RAY IMAGING AND INFRARED RAY TRANSFIXING. MAR. 4, 1975. STZ. 0032775.
3,893,416.—DEVELOPMENT AND CLEANING APP FOR REVERSE PATH MACHINE. JULY 8, 1975.
3,902,062.—REVERSE PATH IMAGING AND TRANSFIXING COPYING METHOD. AUG. 26, 1975. BEL. 0823656.
3,904,875.—SINGLE RADIATION RAY PATH FOR THERMOGRAPHIC IMAGING & TRANSFIXING OR FUSING. SEPT. 9, 1975. ARG. 0207128.
3,906,896.—INK APPLICATOR. SEPT. 23, 1975. CAN. 0974753.
3,908,125.—REVERSE PATH IMAGING AND TRANSFIXING COPYING MACHINE. SEPT. 23, 1975.
3,909,613.—COPYING METHOD AND APP WITH MEANS TO EFFECT VISIBLE RAY IMAGING AND INFRARED RAY TRANSFIXING ØR FUS. SEPT. 30, 1975.
3,923,004.—DEVELOPMENT AND CLEANING APPARATUS FOR REVERSE PATH MACHINE. DEC. 2, 1975. BEL. 0823656.
3,932,025.—IMAGING SYSTEM. JAN. 13, 1976.
3,944,358.—COLOR IMAGE REPRODUCTION SYSTEMS. MAR. 16, 1976.
3,946,230.—COPY METHOD UTILIZING SINGLE RADIANT RAY PATH FOR IMAGING AND TRANSFIXING. MAR. 23, 1976.
3,949,160.—ELECTRO-OPTIC READ OUT OF THERMOPLASTIC DEFORMATION PATTERNS. APR. 6, 1976.
3,951,533.—COLOR IMAGE REPRODUCTION SYSTEM. APR. 20, 1976.
3,984,262.—METHOD OF MAKING A SUBSTRATE STRIPED PLANAR LASER. OCT. 5, 1976.
3,997,243.—COLOR IMAGE REPRODUCTION SYSTEM. DEC. 14, 1976.
4,023,969.—DEFORMABLE ELASTOMER IMAGING MEMBER EMPLOYING AN INTERNAL OPAQUE DEFORMABLE METALLIC LAYER. MAY 17, 1977.
4,051,463.—METHOD AND APPARATUS FOR INVERTING THE POLARITY OF AN INPUT IMAGE FORMED ON A SURFACE OF AN. SEPT. 27, 1977. FRA. 7701769.
4,063,222.—SELECTIVE ERASURE OF IMAGE RECORDING DEVICES. DEC. 13, 1977. FRA. 7701592.
4,099,262.—AUTOMATIC MEMORY CONTROL FEEDBACK SYSTEM FOR A CYCLING OPTICAL IMAGING SYSTEM. JULY 4, 1978.
4,109,316.—METHOD AND APPARATUS FOR INVERTING THE POLARITY OF AN INPUT IMAGE FORMED ON A SURFACE OF AN. AUG. 22, 1978.
4,133,611.—TWO-PAGE INTERWEAVED RANDOM ACCESS MEMORY CONFIOURATION. JAN. 9, 1979.

Class 15B

3,350,205.—METHOD OF IMAGE REPRODUCTION BY PHOTOPOLYMERIZATION AND BLUSHING. OCT. 31, 1967. CAN. 0717934, GRB. 1095174, JAP. 0561238.
3,561,962.—METHOD OF IMAGE REPRODUCTION BY PHOTOPOLYMERIZATION AND BLUSHING. FEB. 9, 1971.
3,834,906.—LIGHT ACTIVATING IMAGING PROCESS. SEPT. 10, 1974.
3,885,963.—LIGHT ACTIVATING IMAGING PROCESS. MAY 27, 1975.
3,890,147.—LIGHT ACTIVATING IMAGING PROCESS. JUNE 17, 1975.
3,892,180.—LIGHT ACTIVATING IMAGING PROCESS. JULY 1, 1975.
3,892,570.—LIGHT ACTIVATING IMAGING PROCESS. JULY 1, 1975.

Class 15B 2

3,862,841.—POLYMERIZATION IMAGING BY CHARGE INJECTION FROM A PHOTOCONDUCTIVE LAYER. JAN. 28, 1975.

Class 15C

3,250,636.—MTD AND APTS IMAGE REPRODCTN W/ USE OF REUSABLE HEAT DEMAGNETIZABLE FERROMAGNETIC IMAGING LAYER. MAY 10, 1966. CAN. 0711404, GRB. 1070986, JAP. 0487336.
3,526,191.—DUPLICATING PROCESS EMPLOYING MAGNETIC DEVELOPER MATERIAL. SEPT. 1, 1970. CAN. 0903830, GER. 1671576, GRB. 1208307.
4,014,065.—MAGNETIC DEVELOPER REMOVAL SYSTEM. MAR. 29, 1977.
4,030,104.—THERMO-MAGNETIC IMAGE TRANSFER APPARATUS. JUNE 14, 1977.
4,032,923.—THERMOMAGNETIC IMAGING APPARATUS. JUNE 28, 1977.
4,035,810.—MAGNETIC INTERPOSITIVE METHOD WITH ELECTROSTATIC IMAGING. JULY 12, 1977.
4,038,665.—DONOR TRANSFER OF MAGNETIC TONER. JULY 26, 1977.
4,060,811.—MAGNETIC LATENT IMAGE CREATION. NOV. 29, 1977.
4,067,018.—EXCESSIVE MAGNETIC DEVELOPER DISPLACEMENT SYSTEM. JAN. 3, 1978.
4,092,954.—HIGH SPEED TANK DEVELOPMENT SYSTEM. JUNE 6, 1978.
4,096,485.—SUCCESSIVE DEVELOPMENT MAGNETIC IMAGINO APPARATUS. JUNE 20, 1978.
4,101,320.—MAGNETIC IMAGING METHOD. JULY 18, 1978.
4,101,904.—MAGNETOGRAPHIC IMAGING MEMBER AND THE METHOD OF ITS USE. JULY 18, 1978.
4,101,943.—CONTROLLED-WIDTH-SYNCHRONIZATION OF RECORDED PIXELS. JULY 18, 1978.
4,108,111.—DEVELOPER HOUSING. AUG. 22, 1978.
4,108,112.—DEVELOPER HOUSING. AUG. 22, 1978.
4,112,156.—MAGNETIC TONER RECOVERY METHOD USING ALTERNATING MAGNETIC FIELD POLARITIES. SEPT. 5, 1978. GRB. 1530562.
4,115,786.—CONSTANT WAVELENGTH MAGNETIC RECORDING. SEPT. 19, 1978.
4,121,261.—SYNCHRONOUS HELICAL SCAN-HELICAL RECORD MAGNETIC IMAGING. OCT. 17, 1978.
4,135,194.—ROTARY HEAD MAGNETIC RECORDINO AT FIXED WAVELENGTH WITH VARYING SPEEDS. JAN. 16, 1979.
4,138,685.—RECORDING WITH IMAGEWISE ALTERATION OF MAGNETIC ATTRACTION OF DONOR. FEB. 6, 1979.
4,255,767.—ELECTRONICALLY CONTROLLED MAGNETIC RECORDING. MAR. 10, 1981. GRB. 0001596111.
4,256,818.—MAGNETIC OR ELECTROSTATOGRAPHIC IMAGING AND HIGH SPEED FUSING METHOD USES POLYAMIDE RESIN IN TONER. MAR. 17, 1981.
4,271,248.—MAGNETIC LATENT IMAGE TONER MATERIAL AND PROCESS FOR ITS USE IN FLASH FUSING DEVELOPING. JUNE 2, 1981.
4,272,600.—MAGNETIC TONERS CONTAINING CUBICAL MAGNETITE. JUNE 9, 1981.

Class 15D

3,441,410.—DEFORMATION IMAGING PROCESSES USING ELECTRICALLY PHOTOSENSITIVE PHOTOCHROMIC MATERIALS. APR. 29, 1969. CAN. 0801267, FRA. 1485348, GER. 1522696, GRB. 1156151, JAP. 0545759.
3,441,411.—IMAGE FORMATION THROUGH CHEMICAL REACTION OF PHOTOCHROMIC MATER. APR. 29, 1969. CAN. 0834676, GRB. 1165215.
3,442,646.—FRMATION OF LIGHT SCATTERING IMGS IN LAYERS COMPRSNG ORGANIC PHOTOCHROMIC MATERIALS. MAY 6, 1969. GRB. 1164484.
3,450,530.—PHOTOGRAPHIC IMAGING BY MEANS THE SURFACE TENSION CREATED BY PHOTOCHROMIC MATERIALS. JUNE 17, 1969.

3,450,531.—ADHESIVE IMAGING ON PHOTOCHROMIC LAYERS. JUNE 17, 1969.
3,450,533.—FORMATION OF LIGHT SCATTERING IMAGES IN PHOTOCHROMIC LAYERS. JUNE 17, 1969. CAN. 0875500.
3,451,811.—ELECTROPHOTOGRAPHIC IMAGING PROCESSES USING ELECTRICALLY PHOTOSENSITIVE PHOTOCHROMIC MATERIALS. JUNE 24, 1969. CAN. 0828692, JAP. 0573734.
3,471,290.—PHOTOCHROMIC PHOTORESIST IMAGING. OCT. 7, 1969.
3,482,973.—IMAGING SYSTEM. DEC. 9, 1969.
3,967,964.—PHOTOSENSITIVE FILM COPRINSING AN ORGANOSELENIUM AND AN ORGANSMERCURY. JULY 6, 1976.
3,973,966.—PHOTOCHROMIC COMPOSITION CONTAINING A DIPHENYL DIBENZOCHRON-3-ENE. AUG. 10, 1976.
4,007,372.—IMPROVED METHOD & ARTICLE FOR IMAGE REPRODUCTION. FEB. 8, 1977.
4,050,937.—IMAGEWISE EXPOSING AND HEATING A MICROIMAGING FILM CONTAINING AN ORGANO DISELENIDE, A TERTI. SEPT. 27, 1977.
4,050,939.—MICROIMAGING FILM CONTAINING AN ORGANO DISELENDIE, A TERTIARY PHOSPHINE OR PHOSPHITE AND AN. SEPT. 27, 1977.
4,106,936.—MICROIMAGING FILM CONTAINING AN ORGANIC DISELENIDE, A TERTIARY PHOSPHINE OR PHOSPHITE & IN. AUG. 15, 1978.

Class 15D 3

4,133,611.—TWO-PAGE INTERWEAVED RANDOM ACCESS MEMORY CONFIGURATION. JAN. 9, 1979.

Class 15E

3,635,708.—VESICULAR IMAGING PROCESS. JAN. 18, 1972.
3,847,644.—IMAGING BY PHASE AGGREGATION FROM BLOCK COPOLYMERS. NOV. 12, 1974.

Class 15F

3,396,401.—APPARATUS AND METHOD FOR MARKING OF INTELLIGENCE ON A RECORD MEDIUM. AUG. 6, 1968.
3,671,237.—METHOD FOR PRODUCING IMAGES. JUNE 20, 1972. CAN. 0886492, GRB. 1317043.
3,753,705.—AGGLOMERATION IMAGING PROCESS USING HARDENABLE MATERIAL. AUG. 21, 1973. CAN. 0929350, GRB. 1330518.
4,029,502.—IMAGING SYSTEM CONTAINING AGGLOMERABLE MATERIAL. JUNE 14, 1977. ARG. 0172317, BEL. 0737813, CAN. 0884217, FRA. 6928725, GER. 1942380, GRB. 1286501, ITL. 0870234, SWD. 0340954.
4,082,549.—AGGLOMERATION IMAGING PROCESS. APR. 4, 1978.
4,084,966.—IMAGING SYSTEM USING AGGLOMERABLE MIGRATION MARKING MATERIAL. APR. 18, 1978.
4,133,683.—AGGLOMERATION IMAGING METHOD. JAN. 9, 1979.

Class 17

4,190,358.—APPARATUS FOR POSITIONING AN ORIGINAL IN REPRODUCING MACHINE. FEB. 26, 1980.

Class 17A

3,909,609.—LIGHT SOURCE MEASURING APPARATUS. SEPT. 30, 1975.

Class 17A 1

3,445,660.—METHOD FOR DETECTION OF ULTRAVIOLET RADIATION. MAY 20, 1969.

Class 17A 2

3,330,700.—SOLAR-CELL PANELS. JULY 11, 1967.
3,359,137.—SOLAR CELL CONFIGURATION. DEC. 19, 1967.
3,513,040.—RADIATION RESISTANT SOLAR CELL. MAY 19, 1970.

Class 17A 3

3,351,493.—DIFFUSED RADIATION TRACKING TRANSDUCER HAVING A LATERAL PHOTO VOLTAGE JUNCTION. NOV. 7, 1967.
3,443,102.—SEMICONDUCTOR PHOTOCELL DETECTOR WITH VARIABLE SPECTRAL RESPONSE. MAY 6, 1969.

Class 17A 4

3,901,607.—HIGH APERTURE REFLECTION PHOTODETECTOR APPARATUS. AUG. 26, 1975.
4,085,321.—MULTIPHASE PHOTOACTIVATED SWITCH. APR. 18, 1978.

Class 17B

3,650,604.—INTER-FERAMETRIC SCANNING APPARATUS AND METHOD. MAR. 21, 1972. CAN. 0954354, GRB. 1363263.
3,650,605.—INTERFERAMETRIC APPARATUS WITH CONTROLLED SCANNING MEANS. MAR. 21, 1972. CAN. 0952749.
3,902,061.—DIGITAL OPTICAL COMPUTER TECHNIQUES. AUG. 26, 1975.
3,978,342.—DUAL MODE RADIATION TRANSMITTING APPARATUS. AUG. 31, 1976.
3,987,685.—CURSOR POSITION DEVICE. OCT. 26, 1976.
4,162,118.—WAVEGUIDE IMAGING SYSTEM. JULY 24, 1979.
4,272,596.—ELECTROPHORETIC DISPLAY DEVICE. JUNE 9, 1981.

Class 17B 1

3,476,473.—FONT INDICATOR. NOV. 4, 1969.
3,481,668.—IMAGE PROJECTION APPARATUS. DEC. 2, 1969.
3,501,838.—PANTOGRAPHIC IMPLEMENTED OVERHEAD PROJECTOR. MAR. 24, 1970.
3,670,633.—RECORDING APPARATUS. JUNE 20, 1972.
3,677,148.—OPTICAL RECORDER. JULY 18, 1972.
3,678,820.—OPTICAL SYSTEM FOR PROJECTION RECORDING APPARATUS. JULY 25, 1972.
3,685,406.—OPTICAL RECORDER. AUG. 22, 1972. BEL. 0777014, CAN. 0960743, FRA. 7146254, GRB. 1372379, ITL. 0944111.
3,695,161.—ALPHANUMERIC PROJECTION DISC ASSEMBLY. OCT. 3, 1972.
3,700,325.—OPTICAL SYSTEM FOR PHOTOCOPYING APPARATUS. OCT. 24, 1972. BEL. 0764830, CAN. 0931409, FRA. 7111622, GRB. 1337447, ITL. 0922162.
3,705,543.—OPTICAL RECORDER. DEC. 12, 1972. CAN. 0948266, GRB. 1372378.
3,759,149.—MULTIPLE FLASH LAMP ALPHANUMERIC PROJECTION DISC ASSEMBLY. SEPT. 18, 1973. CAN. 1002363.
3,759,612.—OPTICAL SYSTEM. SEPT. 18, 1973. BEL. 0792669, CAN. 0972193, FRA. 7243897, GRB. 1395580, ITL. 0984616, SWD. 7216146.
3,768,384.—PROJECTION ASSEMBLY. OCT. 30, 1973.
3,873,207.—POLARIZING INTERFEROMETER. MAR. 25, 1975.
3,880,497.—METHOD OF STORING OPTICAL INFORMATION ON A RANDOM CARRIER. APR. 29, 1975. CAN. 1004887, FRA. 7408054.
3,883,244.—APERTURE ADJUSTMENT IN OPTICAL ASSEMBLY. MAY 13, 1975.
3,897,136.—POLARIZATION-GRATING MOIRE. JULY 29, 1975.
3,909,103.—LENS SCAN MECHANISM. SEPT. 30, 1975.
4,035,068.—SPECKLE MINIMIZATION IN PROJECTION DISPLAYS BY REDUCING SPATIAL COHERENCE OF IMAGE LIGHT. JULY 12, 1977.
4,082,450.—COMPACT ILLUMINATION SYSTEM FOR OPTICALLY PROVIDING A STRUCTURED PHOTORECEPTOR CHARGE DIST. APR. 4, 1978.
4,082,451.—COMPACT ILLUMINATION SYSTEM FOR OPTICALLY PROVIDING A STRUCTURED PHOTORECEPTOR CHARGE DISTR. APR. 4, 1978.
4,110,023.—OPTICAL SYSTEM FOR ALTERNATIVELY PROJECTING ADJACENT IMAGES OF ADJACENT OBJECTS OR DOUBLE. AUG. 29, 1978.
4,113,370.—OPTICAL SYSTEM FOR ALTERNATIVELY PROJECTING ADJACENT IMAGES OF ADJACENT OBJECTS OR DOUBLE. SEPT. 12, 1978.
4,143,943.—REAR PROJECTION SCREEN SYSTEM. MAR. 13, 1979.
4,162,118.—WAVEGUIDE IMAGING SYSTEM. JULY 24, 1979.
4,226,527.—ANTI-STROBING FILTERS. OCT. 7, 1980.

Class 17B 2

3,355,308.—PROJECTION TRANSPARENCY HAVING A TRANSPARENT POWDER IMGE. NOV. 28, 1967.

3,476,478.—APPARATUS FOR CHANGING MAGNIFICATION OF PHOTOCOPIER W/O CHANGING CONJUGATE LENGTH OF OPTICAL SY. NOV. 4, 1969. ARG. 0172460, AUS. 0415808, BEL. 0708650, BRA. 6795668, CAN. 0845405, FRA. 1552364, GER. 1297981, GRB. 1223427. ITL. 0821929, MEX. 0100019, VZL. 0023689.
3,508,812.—HIGHLY CORRECTED SIX ELEMENT GAUSS TYPE LENS. APR. 28, 1970.
3,510,219.—OPTICAL ALIGNMENT SYSTEM. MAY 5, 1970. ARG. 0172455, BRA. 6793791, CAN. 0881018, CHL. 0023570, GRB. 1206966, MEX. 0101166, PRU. 0009329, SPN. 0360896, STZ. 0501233, SWD. 0359168, URG. 0008831, VZL. 0025783.
3,591,256.—VARIABLE MAGNIFICATION LENS SYSTEM. JULY 6, 1971. BEL. 0731553, CAN. 0881019, FRA. 6911559, GRB. 1234515, ITL. 0857660, JAP. 0857539.
3,592,531.—SPLIT DAGOR-TYPE OF SYMMETRICAL COPYING LENS SYSTEM. JULY 13, 1971. CAN. 0929389.
3,600,066.—OPTICAL ASSEMBLY WITH SUPPLEMENTAL LENS MEANS. AUG. 17, 1971. CAN. 0943792, GRB. 1261159, JAP. 0728824.
3,612,662.—EYEPIECE HAVING A WIDE FIELD OF VIEW AND A LARGE EYE RELIEF. OCT. 12, 1971.
3,620,603.—OFF-CENTER FOCUSING SYSTEM. NOV. 16, 1971.
3,630,599.—MECHANICALLY COMPENSATED ZOOM LENS SYSTEM. DEC. 28, 1971. CAN. 0960891, GRB. 1363113.
3,640,605.—MECHANICALLY COMPENSATED ZOOM LENS SYSTEM. FEB. 8, 1972.
3,659,922.—SYMMETRICAL HALF-LENS OPTICAL SYSTEM. MAY 2, 1972.
3,672,748.—SPLIT DAGOR-TYPE OF SYMMETRICAL COPYING LENS SYSTEM. JUNE 27, 1972. ATR. 0322874, AUS. 0467299, BEL. 0783478, CAN. 0960495, GRB. 1358349, ITL. 0953474, SPN. 0402705, STZ. 0544315, SWD. 7206274.
3,741,621.—ADD LENS PROJECTION SYSTEM WITH BALANCED PERFORMANCE. JUNE 26, 1973. BEL. 0781514, CAN. 0963300, FRA. 7208375, GRB. 1393151, ITL. 0950848.
3,817,599.—PROJECTION LENS WITH ADD LENS ELEMENTS. JUNE 18, 1974. CAN. 1008710.
3,865,470.—VARIABLE MAGNIFICATION LENS SYSTEM. FEB. 11, 1975. BEL. 0819497, FRA. 7429827, SPN. 0429431.
3,865,471.—LENS SYSTEM FOR PHOTOELECTROPHORETIC COPYING MACHINE. FEB. 11, 1975.
3,880,498.—ZOOM LENS ASSEMBLY. APR. 29, 1975.
3,907,401.—HIGH PERFORMANCE OPTICAL OBJECTIVE. SEPT. 23, 1975.
3,975,289.—CHARGE TRANSFER COMPLEXEX OF FERRONCENES HAVING LIGHT FILLING PROPERTIES. AUG. 17, 1976.
4,025,541.—CHARGE TRANSFER OF FERROCENES HAVING LIGHT FILTERING PROPERTIES. MAY 24, 1977.

Class 17B 3

3,393,956.—UNIFORM-FIELD KERR CELL. JULY 23, 1968.
3,408,133.—KERR-CELL CAMERA SHUTTER. OCT. 29, 1968.

Class 17B 4

3,358,081.—FACSIMILE PRINTER WITH FERROELECTRIC MODULATOR. DEC. 12, 1967. CAN. 0898336, GRB. 1128973.
3,360,323.—TRANSVERSE MAGNETO-OPTICAL ROTATOR WITH COMPENSATION OF PHASE BETA RDATION. DEC. 26, 1967.
3,601,468.—OPTICAL LIGHT WAVE MODULATOR FOR REPRESENTING A FIRST COLOR LIGHT WAVE AS SECOND COLOR LIGHT WA. AUG. 24, 1971.
3,938,881.—ACOUSTO-OPTIC MODULATION DEVICE. FEB. 17, 1976.
4,011,009.—REFLECTION DIFFRACTION GRATING HAVING A CONTROLLABLE BLAZE ANGLE. MAR. 8, 1977.
4,050,027.—OPTICAL SIGNAL AMPLIFIER. SEPT. 20, 1977.
4,077,700.—WAVEGUIDE ADDRESSING AND MODULATING METHOD AND APPARATUS. MAR. 7, 1978.
4,106,848.—ELASTOMER WAVE GUIDE OPTICAL MODULATORS. AUG. 15, 1978. GRB. 1531900.
4,128,299.—WAVEGUIDE OPTICAL MODULATOR. DEC. 5, 1978.
4,170,028.—FACET TRACKING IN LASER SCANNING. OCT. 2, 1979. BEL. 865751.
4,196,977.—ELECTRO-OPTIC MODULATOR DEFLECTOR. APR. 8, 1980. GRB. 1557484.
4,257,016.—PIEZO-OPTIC, TOTAL INTERNAL REFLECTION MODULATOR. MAR. 17, 1981.
4,264,125.—TRANSMISSIVE SURFACE LAYER EFFECT ELECTRO-OPTIC DEVICE FOR USE IN OPTICAL MODULATORS AND THE LIKE. APR. 28, 1981.

Class 17C

3,870,921.—IMAGE INTENSIFIER TUBE WITH IMPROVED PHOTOEMITTER SURFACE. MAR. 11, 1975.
4,074,143.—OPTOELECTRONIC DEVICE WITH OPTICAL FEEDBACK. FEB. 14, 1978. FRA. 7631992.
4,138,190.—GEOMETRICAL TRANSFORMATIONS IN OPTICS. FEB. 6, 1979. GRB. 1502127.

Class 17C 1

3,277,297.—ION IMAGE TO ELECTRON IMAGE CONVERTER. OCT. 4, 1966.
3,322,999.—IMAGE-INTENSIFIER TUBE. MAY 30, 1967.
3,519,870.—SPIRLD STRIP MATRL HAVNG PRLEL GROVS FRMNG PLURALITY OF ELCTRN MULTIPLIER CHANNELS. JULY 7, 1970.
3,983,045.—THREE COMPONENT DEVELOPER COMPOSITION. ARG. 0194232, ATR. 0334199, AUS. 0462045, BEL. 0789987, CHL. 0027625, FRA. 7236617, GRB. 1402009, ITL. 0968815, MEX. 0125231, NZL. 0168638, PNM. 0002796, SAF. 0727225, SPN. 0407564, STZ. 0028096, SWD. 7213035, TIW. 0007666, VZL. 0012802.

Class 17C 2

3,368,077.—INFRA-RED IMAGE INTENSIFIER HAVING A TUNNEL-EMISSION CATHODE HAVING A CONDUCTIVE MOSAIC. FEB. 6, 1968.
3,949,225.—INFRARED IMAGING APPARATUS. APR. 6, 1976.

Class 17C 3

3,446,561.—PASSIVE BRIGHT PATTERN RETICLE. MAY 27, 1969.
3,837,732.—PARTIALLY TRANSPARENT PLATED FOR INCREASED IMAGE CONTRAST. SEPT. 24, 1974. CAN. 0893234, GRB. 1237697, JAP. 0645592.

Class 17C 4

3,441,736.—IMAGE INTENSIFIER INCLUDING SEMICONDUCTOR AMPLIFIER LAYER. APR. 29, 1969.

Class 17D

D.235,655.—DISPLAY DEVICE. JULY 1, 1975.
3,987,413—DETECTION SYSTEM. OCT. 19, 1976.
4,035,061.—HONEYCOMB DISPLAY DEVICES. JULY 12, 1977.
4,111,538.—PROJECTION SYSTEM OF HIGH EFFICIENCY. SEPT. 5, 1978.
4,126,528.—ELECTROPHORETIC COMPOSITION AND DISPLAY DEVICE. NOV. 21, 1978.
4,126,854.—TWISTING BALL PANEL DISPLAY. NOV. 21, 1978.
4,143,103.—METHOD OF MAKING A TWISTING BALL PANEL DISPLAY. MAR. 6, 1979.
4,182,553.—HONEYCOMB DISPLAY DEVICES. JAN. 8, 1980.
4,185,256.—MODE CONTROL OF HETEROJUNCTION INJECTION LASERS AND METHOD OF FABRICATION. JAN. 22, 1980.
4,277,762.—MODE CONTROL OF HETEROJUNCTION INJECTION LASERS AND METHOD OF FABRICATION. JULY 7, 1981. CAN. 1100216.

Class 17D 1

3,422,737.—VARIABLE FONT CHARACTER GENERATOR. JAN. 21, 1969. ARG. 0157019, BRA. 0087922, CAN. 0788611, CHL. 0022222, FRA. 1506176, GRB. 1162840, ITL. 0788951, JAP. 0590133, MEX. 0094427.
3,519,867.—ELECTRIC DISCHARGE TUBE FOR DISPLAYING ALPHNUMERIC CHARACTER SYMBOLS. JULY 7, 1970.
3,564,319.—CATHOD RAY TUBE W/MATRIX FRMG ELEMNTL ELECTRN BEAMS AND MEANS SELECTVLY FRMG INTO CHAR AT FACE PLA. FEB. 16, 1971.

3,587,083.—CHARACTER GENERATION AND DISPLAY SYSTEM. JUNE 22, 1971. CAN. 0858092, FRA. 1582728, GER. 1774884, GRB. 1234580, ITL. 0846528, JAP. 0678504.
3,641,557.—CIRCUIT ARRANGEMENT FOR AN ELECTRIC DISCHARGE TUBE. FEB. 8, 1972.
3,742,484.—CHARACTER GENERATING APPARATUS EMPLOYING BIT STEAM LENGTH CORRECTION. JUNE 26, 1973.
3,781,848.—DISPLAY SYSTEM - CHARACTER GENERATOR SYSTEM A. DEC. 25, 1973.
3,810,165.—ELECTRONIC DISPLAY DEVICE. MAY 7, 1974.
3,830,646.—IMAGE REGISTRATION CORRECTION FOR NON-IMPACT PRINTERS. AUG. 20, 1974. CAN. 0986764, FRA. 7339099, GRB. 1440507.
3,911,419.—CONTROLLER FOR CURSOR POSITIONING ON A DISPLAY MEDIUM. OCT. 7, 1975.
3,952,296.—VIDEO SIGNAL GENERATING APPARATUS WITH SEPARATES PROCESSING OF ODD AND EVEN VIDEO BITS. APR. 20, 1976.
4,103,331.—DATA PROCESSING DISPLAY SYSTEM. JULY 25, 1978.
4,233,611.—RECORDING HEAD FOR ELECTROSTATIC PRINTING APPARATUS. NOV. 11, 1980.

Class 17D 2

RE.28,360.—ELECTROPHORETIC COLOR DISPLAY DEVICE. MAR. 4, 1975.
3,524,022.—ELECTRO-OPTICAL DISPLAY SYSTEM. AUG. 11, 1970.
3,588,584.—APPARATUS FOR POSITIONING A LIGHT SPOT ONTO A CHARACTER MASK. JUNE 28, 1971.
3,612,758.—COLOR DISPLAY DEVICE - REISSUED D 2717R. OCT. 12, 1971.

Class 17D 3

3,198,976.—ELECTRIC DISCHARGE TUBES AND APPLICATIONS THEREOF. AUG. 3, 1965.
3,264,638.—ELECTRONIC CODE TRANSLATION. AUG. 2, 1966. CAN. 0740559.
3,349,677.—ALPHA NUMERIC CHARACTER PRINTER. OCT. 31, 1967.
3,403,390.—MESSAGE STORAGE. SEPT. 24, 1968. GRB. 1078401.
3,861,804.—INFEROMETRY READOUT OF PHASE INFORMATION. JAN. 21, 1975. CAN. 0980745, GRB. 1387905.
3,898,377.—VIDEO MIXER. AUG. 5, 1975.

Class 17D 4

3,478,659.—APPARATUS FOR JUSTIFYING A REPRODUCED LINE OF CHARACTERS. NOV. 18, 1969.

Class 17D 5

3,330,190.—PRINTING APPARATUS. JULY 11, 1967. CAN. 0758791, GER. 1280282, GRB. 1102419, JAP. 0529726.

Class 17E

3,852,775.—MOVING BELT SCANNING PRINTER. DEC. 3, 1974.
4,027,961.—COPIER/PASTER SCAN APPARATUS. JUNE 7, 1977.
4,080,633.—TWISTING GEOMETRY SCANNER. MAR. 21, 1978.
4,135,812.—MAGNIFICATION CHANGE MECHANISM. JAN. 23, 1979.
4,155,620.—ROTATING MIRROR OPTICAL SCANNER WITH FLAT SCAN AND LINEAR SCAN RATE. MAY 22, 1979.
4,160,939.—MOTOR SPEED CONTROL SYSTEM. JULY 10, 1979.
4,174,174.—COMPOSING REDUCING CAMERA. NOV. 13, 1979.
4,178,064.—REAL TIME GRATING CLOCK FOR GALVANOMETER SCANNERS IN LASER SCANNING SYSTEMS. DEC. 11, 1979.
4,204,233.—ELECTRONIC FACET ERROR CORRECTION FOR LASER SCANNING. MAY 20, 1980.
4,217,561.—BEAM SCANNING USING RADIATION PATTERN DISTORTION. AUG. 12, 1980.
4,219,785.—OPTICAL BEAM SCANNING BY PHASE DELAYS. AUG. 26, 1980.
4,230,394.—MIRROR FACET TRACKER USING SPHERICAL MIRRORS. OCT. 28, 1980.
4,247,160.—SCANNER WITH REFLECTIVE PYRAMID ERROR COMPENSATION. JAN. 27, 1981.
4,253,725.—SINGLE SIDEBAND SCANNER. MAR. 3, 1981.
4,272,684.—OPTICAL BEAM-SPLITTING ARRANGEMENTS ON OBJECT SIDE OF A LENS. JUNE 9, 1981.

Class 17E 1

3,337,718.—LIGHT SCAN RECORDING AND READOUT. AUG. 22, 1967. CAN. 0794443, GRB. 1070030.
3,426,144.—TRANSCEIVER APPARATUS FOR TRANSMITTING AND RECORDING OPTICAL INFORMATION. FEB. 4, 1969. CAN. 0810757, GRB. 1158568, JAP. 0579399.
3,426,354.—ELECTROSTATIC CHARGE IMAGE RECORDER. FEB. 4, 1969. AUS. 0295167, BEL. 0664729, CAN. 0739120, DNK. 0115269, FRA. 1455131, GER. 1280281, GRB. 1084494, HOL. 0136720, ITL. 0761085, JAP. 0492014, STZ. 0444906, SWD. 0338117.
3,548,195.—RADIATION SENSITIVE DOCUMENT SCANNING MEANS. DEC. 15, 1970. CAN. 0901968, FRA. 1592840, GER. 1809854, GRB. 1230836, ITL. 0848026, JAP. 0587941.
3,553,463.—RADIATION SENSITIVE DOCUMENT SCANNING APPARATUS USING HELICAL SCANNER. JAN. 5, 1971.
3,775,559.—APERTURE DESIGNS FOR FACSIMILE SCANNING APPARATUS. NOV. 27, 1973. CAN. 0960770, GRB. 1376189.
3,820,900.—INSTRUMENT FOR SCANNING DOCUMENT FOR QUALITY. JUNE 28, 1974.
3,867,571.—FLYING SPOT SCANNER. FEB. 18, 1975. CAN. 0995351.
3,898,470.—SCANNING ARRANGEMENT FOR MULTIFUNCTION OPERATION. AUG. 5, 1975.
3,922,485.—FLYING SPOT SCANNER WITH SCAN DETECTION. NOV. 25, 1975.
3,944,323.—VARIABLE SPOT SIZE SCANNING. MAR. 16, 1976. BEL. 0835552.
3,946,150.—OPTICAL SCANNER. MAR. 23, 1976.
3,962,538.—FLYING SPOT SCANNING SYSTEM WITH VIRTUAL SCANNERS. JUNE 8, 1976.
3,966,319.—FLAT FIELD SCREENING MIRROR. JUNE 29, 1976.
3,970,359.—FLYING SPOT FLAT FIELD SCANNER. JULY 20, 1976.
3,973,825.—FLAT FIELD SCANNING SYSTEM. AUG. 10, 1976. BEL. 0836735.
3,974,506.—SCANNING SYSTEM FOR IMAGING CHARACTERS COMBINED WITH GRAPHIC CURVES. AUG. 10, 1976.
3,997,721.—FLYING SPOT SCANNING SYSTEM WITH REDUCED SCAN ANGLE. DEC. 14, 1976.
4,006,299.—FLAT FILLED SCANNING SYSTEM. FEB. 1, 1977. BEL. 0836543.
4,012,585.—INPUT AND OUTPUT FLYING SPOT SCANNING SYSTEM. MAR. 15, 1977.
4,015,081.—MULTIFUNCTION SCANNING SYSTEM. MAR. 29, 1977. BEL. 0836790.
4,021,897.—A PROCESS FOR PROVIDING CEMENTED GLASS FLATS TO PROVIDE HIGH SPEED MULTI-FACETED POLYGONAL SCAN. APR. 10, 1977.
4,034,408.—FLYING SPOT SCANNER. JULY 5, 1977. GRB. 1452300.
4,047,793.—POLYGON SCANNER WITH ANNULAR LIP. SEPT. 13, 1977.
4,052,715.—DIGITAL HALF-TONE GREY SCALE EXPANSION SYSTEM. OCT. 4, 1977.
4,067,639.—HOLOGRAPHIC SCANNING SPINNER. JAN. 10, 1978.
4,070,089.—TWO DIMENSIONAL LASER SCANNER WITH MOVABLE CYLINDER LENS. JAN. 24, 1978.
4,071,754.—BEAM ALIGNMENT DETECTOR. JAN. 31, 1978.
4,080,633.—TWISTING GEOMETRY SCANNER. MAR. 21, 1978.
4,092,632.—CROSSOVER ARRANGEMENT FOR MULTIPLE SCANNING ARRAYS. MAY 30, 1978.
4,093,350.—A SYSTEM FOR CENTRIFUGALLY CASTING A THIN FILM PLASTIC IN A REPLICA PROCESS FOR PROVIDING M. JUNE 6, 1978.
4,101,365.—PROCESS OF MAKING HIGH SPEED MULTI-FACETED POLYGONAL SCANNERS. JULY 18, 1978.
4,122,352.—SCANNING ARRAY CONFIGURATION. OCT. 24, 1978.
4,140,903.—PRECISION SPEED CONTROL FOR OPTICAL SCANNERS. FEB. 20, 1979.
4,143,311.—HYSTERESIS SYNCHRONOUS MOTOR RATE SERVO SYSTEM. MAR. 6, 1979.
4,146,786.—SCANNER WITH MODULAR ARRAY OF PHOTOCELLS. MAR. 27, 1979.
4,149,090.—CROSSOVER ARRANGEMENT FOR MULTIPLE SCANNING ARRAYS. APR. 10, 1979.
4,149,091.—SCANNING APPARATUS. APR. 10, 1979.

4,150,402.—METHOD AND APPARATUS FOR REDUCING THE EFFECT OF LASER NOISE IN A SCANNING LASER READ SYSTEM. APR. 17, 1979.
4,162,121.—LINEAR ARRAY MODULATOR. JULY 24, 1979.
4,179,620.—CROSSOVER ARRANGEMENT FOR MULTIPLE SCANNING ARRAYS. DEC. 18, 1979.
4,179,621.—SCANNING APPARATUS. DEC. 18, 1979.
4,200,788.—MODULAR ARRAY. APR. 29, 1980.
4,204,230.—HIGH RESOLUTION INPUT SCANNER USING A TWO DIMENSIONAL DETECTOR ARRAY. MAY 20, 1980.
4,205,100.—A SYSTEM FOR PROVIDING ELECTROLESSLY NICKEL COATED POLISHED HIGH SPEED MULTI-FACETED POLYGONAL SCANNER. MAY 27, 1980.
4,213,157.—SELF TRACKING LASER SCANNING APPRATUS. JULY 15, 1980.
4,216,503.—SIGNAL RESTORATION AND GAIN CONTROL FOR IMAGE VIEWING DEVICES. AUG. 5, 1980.
4,239,326.—HOLOGRAPHIC SCANNER FOR RECONSTRUCTING A SCANNING LIGHT SPOT INSENSITIVE TO A MECHANICAL WOBBLE. DEC. 16, 1980. CAN. 1084314, GRB. 1576226.
4,241,990.—MULTI-PURPOSE OPTICAL DATA PROCESSOR. DEC. 30, 1980.
4,243,293.—HOLOGRAPHIC SCANNER INSENSITIVE TO MECHANICAL WOBBLE. JAN. 6, 1981.
4,259,370.—PROCESS FOR PROVIDING HIGH SPEED MULTI-FACETED INJECTION MOLDED POLYGONAL SCANNERS EMPLOYING AN ADHESION PROMOTING OVERCOATING FOR SUBSTANTIALLY APPLIED THIN FILM COATINGS. MAR. 31, 1981.
4,274,703.—HIGH-EFFICIENCY SYMMETRICAL SCANNING OPTICS. JUNE 23, 1981.
4,281,254.—SELF SCANNED PHOTOSENSITIVE ARRAY. JULY 28, 1981.

Class 17E 2

3,407,329.—SCANNED CONVERSION TUBE. OCT. 22, 1968. CAN. 0836783, GER. 1639461, GRB. 1190967, JAP. 0565840.
3,437,408.—MULTIPLE COPY ELECTROSTATIC IMAGING APPARATUS. APR. 8, 1969. ARG. 0164840, ATR. 0283115, AUS. 0410817, BEL. 0704323, CAN. 0831674, CZC. 0156411, EGR. 0065587, FRA. 1538197, GER. 1597879, GRB. 1202583, HUN. 0161168, ITL. 0822157, JAP. 0582502, MEX. 0099930, SPN. 0345482, STZ. 0484459, SWD. 0331795, USR. 0353450, VZL. 0023662.
3,474,417.—FIELD EFFECT SOLID STATE IMAGE PICKUP AND STORAGE DEVICE. OCT. 21, 1969. CAN. 0869188, GER. 1549144, GRB. 1203095, JAP. 0568732.
3,523,188.—SEMICONDUCTOR CURRENT CONTROL DEVICE AND METHOD. AUG. 4, 1970.
4,147,928.—SCANNING ARRAY CONFIGURATION. APR. 3, 1979.

Class 17E 3

3,485,945.—ELECTRONIC LENTICULAR RECORDING SYSTEM. DEC. 23, 1969.
3,510,570.—ELECTRONIC LENTICULAR DISPLAY SYS. MAY 5, 1970.
3,650,621.—OPTICAL IMAGING SYSTEM. MAR. 21, 1972. BEL. 0747978, CAN. 0927470, FRA. 7011548, GRB. 1297907, ITL. 0898936, JAP. 0731225.
3,655,284.—LONGITUDINALLY INSENSITIVE LENS STRIP IMAGING DEVICE. APR. 11, 1972.
3,827,062.—OPTICAL ARRANGEMENT FOR HIGH SPEED PRINTOUT SYSTEM. JULY 30, 1974.
3,853,387.—VARIABLE MAGNIFICATION LENS ASSEMBLY HAVING TWO ADD LENSES. DEC. 10, 1974.
3,865,470.—VARIABLE MAGNIFICATION LENS SYSTEM. FEB. 11, 1975. BEL. 0819497, FRA. 7429827, SPN. 0429431.

Class 17E 4

3,279,342.—COMMUNICATION PRINTER. OCT. 18, 1966. CAN. 0767902, GRB. 1120446, JAP. 0698291.
3,481,668.—IMAGE PROJECTION APPARATUS. DEC. 2, 1969.
3,485,546.—FIELD FLATTENER SCANNING MEANS. DEC. 23, 1969. CAN. 0850916, GRB. 1196373, JAP. 0667705.
3,504,960.—SAGITTAL RAY APERTURE STOP. APR. 7, 1970. AUS. 0413558, BEL. 0704924, CAN. 0849815, FRA. 1540700, GRB. 1209472, ITL. 0814606, JAP. 0972613.
3,532,425.—GRAPHIC DISTORTION APPARATUS. OCT. 6, 1970.
3,544,190.—LENS STRIP OPTICAL SCANNING SYSTEM. DEC. 1, 1970. CAN. 0904070, GRB. 1278336.
3,584,950.—LENS STRIP OPTICAL SCANNING SYSTEM. JUNE 15, 1971.
3,584,952.—LENS STRIP OPTICAL SCANNING SYSTEM - REISSUED D 2074R. JUNE 15, 1971.
3,584,953.—SHORT FOCAL OPTICAL LENGTH SCANNING SYSTEM. JUNE 15, 1971.
3,963,343.—CAMMING SYSTEMS. JUNE 15, 1976. BEL. 0824049.
4,006,648.—CAMMING SYSTEM. FEB. 8, 1977. BEL. 0824049.
4,034,359.—APPARATUS FOR SYNCHRONOUSLY SCANNING A FLAT PLATEN WITH A ROTATING MIRROR USING PULLEYS. OCT. 18, 1977.
4,067,640.—APPARATUS FOR SYNCHRONOUSLY SCANNING A FLAT PLATEN WITH A ROTATING MIRROR. JAN. 10, 1978.
4,130,838.—SPEED CONTROL APPARATUS FOR SCANNING SYSTEM. DEC. 19, 1978.
4,170.028.—FACET TRACKING IN LASER SCANNING. OCT. 2, 1979. BEL. 865751.

Class 17E 5

3,219,993.—IMAGE FORMATION AND DISPLAY UTILIZING A THERMOTROPICALLY COLOR REVERSIBLE MATERIAL. NOV. 23, 1965. CAN. 0762159, GER. 1222795, ITL. 0753655, JAP. 0474129.
3,249,757.—THERMAL IMAGING DEVICE. MAY 3, 1966.
3,995,278.—SUPERCONDUCTIVE MAGNETOSTATIC PRINTER. NOV. 30, 1976.

Class 17E 6

3,456,074.—IMAGE STABILIZATION OF OPTICAL IMAGING SYSTEMS. JULY 15, 1969.
3,461,227.—MECHANICAL JITTER EQUALIZER. AUG. 12, 1969. CAN. 0824819, GRB. 1198303.
3,873,189.—ADJUSTABLE-POSITION OPTICAL SYSTEM. MAR. 25, 1975.

Class 17F 1

3,325,674.—MOVING TARGET DISPLAY INDICATOR. JUNE 13, 1967.
3,340,419.—ELECTRIC DISCHARGE TUBES. SEPT. 5, 1967. CAN. 0773690.
3,447,026.—CRT SCAN STABILIZER. MAY 27, 1969. GER. 1490986.
3,483,414.—STORG TUBE HVG FLD EFF LAYR W/ CONDCTG PINS EXT TO LAYR THAT READOUT NOT ERASE CHG PATTERN. DEC. 9, 1969. CAN. 0850846, GER. 1537566, GRB. 1203432, JAP. 0565841.
4,280,125.—THIN VACUUM PANEL DISPLAY DEVICE. JULY 21, 1981.

Class 17F 2

3,153,785.—TIME COMPRESSED DISPLAY. OCT. 20, 1964. CAN. 0708306, GRB. 1008993.
3,579,024.—SELECTIVE BLANKING CONTROL CIRCUIT. MAY 18, 1971.

Class 17G

3,619,714.—PANEL DISPLAY DEVICE. NOV. 9, 1971.
4,003,742.—VELOCITY COMPENSATION FOR BEAD BYPASS WITH SPEED REDUCTION. JAN. 18, 1977.

Class 17G 1

3,459,946.—SOLID STATE STORAGE DEVICE. AUG. 5, 1969.
3,510,660.—METHOD FOR VISUAL COMPARISON OF INFORMATION. MAY 5, 1970. CAN. 0848611, GRB. 1201376, JAP. 0595641.
3,539,862.—DUAL CONDUCTOR STORAGE PANEL. NOV. 10, 1970. ARG. 0175067, AUS. 0414034, BEL. 0723721, CAN. 0878168, FRA. 1591040, GER. 1808238, GRB. 1235310, HOL. 0150616, ITL. 0847618, JAP. 0742515, MEX. 0111871, SPN. 0360366, STZ. 0493930, SWD. 0345341, VZL. 0023718.
4,002,998.—EXTERNALLY CONTROLLABLE MINIATURE LASERS. JAN. 11, 1977.
4,085,321.—MULTIPHASE PHOTOACTIVATED SWITCH. APR. 18, 1978.

Class 17G 2

3,531,647.—DEVICE AND PROCESS FOR REDUCTION OF BACKGROUND LIGHT IN SOLID STATE STORAGE PANELS. SEPT. 29, 1970. CAN. 0862333, FRA. 1540063, GER. 1549143, GRB. 1201375, ITL. 0818126, MEX. 0101197.
3,531,648.—SOLID STATE STORAGE PANEL FOR COLOR REPRODUCTION. SEPT. 29, 1970. CAN. 0846433, GRB. 1201377.
3,540,008.—SOLID STATE STORAGE DEVICES HAVING NON-CORONA EXTINCTION CAPABILITY. NOV. 10, 1970. ARG. 0166245, AUS. 0424286, BEL. 0725616, CAN. 0897827, FRA. 1599275, GER. 1815243, GRB. 1250023, ITL. 0849327, JAP. 0742516, MEX. 0106020, SPN. 0361652, STZ. 0504755, SWD. 0361123, VZL. 0023729.
3,561,964.—METHOD FOR PRODUCTION OF SOLID STATE STORAGE PANELS. FEB. 9, 1971. ARG. 0184633, AUS. 0427883, BEL. 0736077, CAN. 0866994, FRA. 6924001, GER. 1935763, GRB. 1270845, HOL. 0150271, ITL. 0870080, JAP. 0681942, MEX. 0113574, SPN. 0369656, STZ. 0513430, SWD. 0358991, VZL. 0023743.
3,594,610.—DISPLAY PANEL WITH CORONA DISCHARGE CONTROL. JULY 20, 1971.

Class 17G 3

3,205,403.—ELECTROLUMINESCENT DISPLAY SYSTEMS. SEPT. 7, 1965.
3,221,335.—ELECTRO-OPTICAL RECORDING AND VISUAL DISPLAY SYSTEMS. NOV. 30, 1965. AUS. 0226551, CAN. 0801882, FRA. 1202340, GER. 1107705, GRB. 0880692, JAP. 0306714.
3,989,355.—ELECTRO-OPTIC DISPLAY SYSTEM. NOV. 2, 1976.

Class 17G 4

3,293,441.—IMAGE INTENSIFIER WITH FERRO-ELECTRIC LAYER AND BALANCED IMPEDANCES. DEC. 20, 1966.
3,300,645.—FERROELECTRIC IMAGE INTENSIFIER INCLUDING INVERSE FEEDBACK MEANS. JAN. 24, 1967.
3,440,428.—IMAGE CONVERTER USING CHARGED PHOTOEMISSIVE LAYER. APR. 22, 1969. CAN. 0858119, GER. 1639462, GRB. 1202049, JAP. 0565839.
3,441,736.—IMAGE INTENSIFIER INCLUDING SEMICONDUCTOR AMPLIFIER LAYER. APR. 29, 1969.
3,531,646.—ENHANCEMENT OF ELECTROSTATIC IMAGES. SEPT. 29, 1970. CAN. 0892186, GRB. 1199462, JAP. 0641476.
3,543,032.—DEVICE AND PROCESS FOR AMPLIFYING AND STORING AN IMAGE. NOV. 24, 1970. ARG. 0177440, CAN. 0880586, MEX. 0111518, PNM. 0001809, VZL. 0027508.

Class 17H

3,742,281.—CONTROLLED SPECTRUM FLASH LAMP. JUNE 26, 1973.
3,949,979.—SINGLE LONGITUDINAL MODE GAAS/GAALAS DOUBLE HETEROSTRUCTURE LASER. APR. 13, 1976.
3,995,110.—FLYING SPOT SCANNER WITH PLURAL LENS CORRECTION. NOV. 30, 1976.
4,021,845.—A LASER FOR GENERATING WHITE LIGHT. MAY 3, 1977. BEL. 0846954.
4,040,096.—FLYING SPOT SCANNER WITH RUNOUT CORRECTION. AUG. 2, 1977.
4,065,731.—TANDEM LASER ASSEMBLY. DEC. 27, 1977.
4,084,197.—FLYING SPOT SCANNER WITH SCAN DETECTION. APR. 11, 1978.
4,132,960.—SINGLE LONGITUDINAL MODE GAAS/GAALAS DOUBLE HETEROSTRUCTURE LASER. JAN. 2, 1979.
4,184,170.—LIGHT EMITTING DIODE. JAN. 15, 1980.
4,217,561.—BEAM SCANNING USING RADIATION PATTERN DISTORTION. AUG. 12, 1980.
4,219,785.—OPTICAL BEAM SCANNING BY PHASE DELAYS. AUG. 26, 1980.

Class 17H 1

3,427,564.—HIGH-POWER IONIZED GAS LASER STRUCTURE. FEB. 11, 1969.
3,437,950.—ION LASER HAVING A METAL TUBE SHRINK-FITTED ONTO THE CERAMIC DISCHARGE TUBE. APR. 8, 1969.
3,523,256.—HEAT PUMPED LASER. AUG. 4, 1970.
3,529,261.—LASR HVNG ACTV MEDIUM WHCH IS AN EXCTD HALOGN WHSE LOWR ENRGY ST IS DEPLETD BY REACTNG W/ALKAL. SEPT. 15, 1970. CAN. 0816276, FRA. 1446601, GER. 1299367, GRB. 1124346, ITL. 0726918.
3,562,173.—LASER MATERIALS. FEB. 9, 1971.
3,860,888.—TIME-SHARING TWO FREQUENCY LASER. JAN. 14, 1975.
3,954,534.—LIGHT EMITTING DIODE ARRAY WITH DOME GEOMETRY. MAY 4, 1976.
3,969,686.—BEAM COLUMNATION USING MULTIPLE COUPLED ELEMENTS. JULY 13, 1976.
3,970,958.—ELECTRICALLY PUMPED SOLID-STATE DISTRIBUTED FEEDBACK LASER WITH PATICULAR GRATING SPACING. JULY 20, 1976. BEL. 0834484.
3,978,428.—BURIED-HETEROSTRUCTURE DIODE INJECTION LASER. AUG. 31, 1976.
4,006,432.—INTEGRATED GRATING OUTPUT COUPLER IN DIODE LASERS. FEB. 1, 1977. BEL. 0834480.
4,023,993.—METHOD OF MAKING AN ELECTRICALLY PUMPED SOLID STATE DISTRIBUTED FEEDBACK LASER. MAY 17, 1977. BEL. 0832000, SPN. 0440361.
4,033,796.—METHOD OF MAKING BURIED-HETEROSTRUCTURE DIODE INJECTION LASER. JULY 5, 1977.
4,045,749.—CORRUGATION COUPLED TWIN GUIDE LASER. AUG. 30, 1977.
4,052,680.—METAL VAPOR LASER HAVING CATAPHORESIS MEANS. OCT. 4, 1977.
4,063,189.—LEAKY WAVE DIODE LASER. DEC. 13, 1977.
4,099,999.—METHOD OF MAKING ETCHED-STRIPED SUBSTRATE PLANAR LASER. JULY 11, 1978.
4,105,954.—DOUBLE-CONFINED MULTIPLE ANODE HOLLOW CATHODE LASER. AUG. 8, 1978.
4,111,521.—SEMICONDUCTOR LIGHT REFLECTOR/LIGHT TRANSMITTER. SEPT. 5, 1978.
4,112,389.—DIODE LASER WITH RING REFLECTOR. SEPT. 5, 1978.
4,122,409.—METHOD AND APPARATUS FOR CONTROLLING THE INTENSITY OF A LASER OUTPUT BEAM. OCT. 24, 1978. BEL. 852044.
4,149,779.—INTERNAL LASER MIRROR ALIGNMENT FIXTURE. APR. 17, 1979.
4,185,256.—MODE CONTROL OF HETEROJUNCTION INJECTION LASERS AND METHOD OF FABRICATION. JAN. 22, 1980.
4,187,474.—IMPROVED METAL VAPOR LASER DISCHARGE TUBE. FEB. 5, 1980.
4,193,042.—SELF-CONFINED HOLLOW CATHODE LASER. MAR. 11, 1980.
4,224,579.—IMPROVED METAL VAPOR LASER DISCHARGE TUBE. SEPT. 23, 1980.
4,233,568.—LASER TUBE MIRROR ASSEMBLY. NOV. 11, 1980. BEL. 838503, CAN. 1041206, GRB. 1539912, STZ. 611082.
4,249,142.—ENHANCEMENT OF LOWEST ORDER MODE OPERATION IN NONPLANAR DH INJECTION LASERS. FEB. 3, 1981.
4,251,780.—STRIPE OFFSET GEOMETRY IN INJECTION LASERS TO ACHIEVE TRANSVERSE MODE CONTROL. FEB. 17, 1981.
4,255,717.—MONOLITHIC MULTI-EMITTING LASER DEVICE. MAR. 10, 1981.
4,255,720.—VARIABLE DIAMETER SEGMENTED HOLLOW CATHODE LASER DEVICE MAR. 10, 1981.
4,277,762.—MODE CONTROL OF HETEROJUNCTION INJECTION LASERS AND METHOD OF FABRICATION. JULY 7, 1981. CAN. 1100216.
4,280,106.—STRIPPED SUBSTRATE PLANAR LASER. JULY 21, 1981.
4,280,107.—APERTURED AND UNAPERTURED REFLECTOR STRUCTURES FOR ELECTROLUMINESCENT DEVICES. JULY 21, 1981.
4,280,108.—TRANSVERSE JUNCTION ARRAY LASER. JULY 28, 1981.

Class 17H 2

3,296,541.—BROADBND TRVLNG WAVE MASER W/BOTH MASER AND ISOLATOR CRYSTALS CUT ATDFRNT ANGLES TO OPTICAL AXIS. JAN. 3, 1967.
3,983,509.—DISTRIBUTED FEEDBACK DIODE LASER. SEPT. 28, 1976.

Class 17H 3

3,258,597.—LASER HETERODYNE COMMUNICATION SYSTEM. JUNE 28, 1966.
3,465,166.—FAR INFRA-RED COHERENT LIGHT GENERATOR. SEPT. 2, 1969.

3,499,159.—POLYCHROMATIC LASER AEROSOL SIZING AND RANGING-PLASAR-TECHNIQUE. MAR. 3, 1970.
3,500,236.—LASER STABILIZING SYSTEM. MAR. 10, 1970.
3,534,289.—LASER SYSTEM WITH OPTICAL DISCRIMINATOR. OCT. 13, 1970.
3,753,144.—GAS LASER STRUCTURE. AUG. 14, 1973.
3,909,254.—LASER RECORDING METHOD. SEPT. 30, 1975.
4,012,776.—LUMINESCENT SCREEN LASER SCANNING TECHNIQUE. MAR. 15, 1977.
4,070,089.—TWO DIMENSIONAL LASER SCANNER WITH MOVABLE CYLINDER LENS. JAN. 24, 1978.
4,100,408.—SIGNAL GENERATOR FOR RASTER TYPE SCANNERS. JULY 11, 1978.
4,106,844.—LASER SCANNING SYSTEM USING COMPUTER-GENERATED HOLOGRAMS. AUG. 15, 1978.
4,143,311.—HYSTERESIS SYNCHRONOUS MOTOR RATE SERVO SYSTEM. MAR. 6, 1979.
4,169,275.—REPRODUCTION SCANNING SYSTEM HAVING INTERMEDIATE STORAGE BETWEEN INPUT AND OUTPUT SCANNING STATIONS. SEPT. 25, 1979.
4,170,028.—FACET TRACKING IN LASER SCANNING. OCT. 2, 1979. BEL. 856751.
4,205,348.—LASER SCANNING UTILIZING FACET BRACKING AND ACOUSTAL PULSE IMAGING TECHNIQUES. MAY 27, 1980.
4,205,350.—REPRODUCTION SCANNING SYSTEM HAVING INTERMEDIATE STORAGE BETWEEN INPUT AND OUTPUT SCANNING STATIONS. MAY 27, 1980.
4,213,158.—OPTICAL DAT RECORDING SYSTEM UTILIZING ACOUSTIC PULSE IMAGING TO MINIMIZE IMAGE BLUR. JULY 15, 1980.
4,230,902.—MODULAR LASER PRINTING SYSTEM. OCT. 28, 1980.

Class 17I

3,630,598.—OPTICAL DEMODULATION FILTER. DEC. 28, 1971. BEL. 0761134, CAN. 0904628, GRB. 1330709, ITL. 0914073, JAP. 0770139.
3,650,605.—INTERFERAMETRIC APPARATUS WITH CONTROLLED SCANNING MEANS. MAR. 21, 1972. CAN. 0952749.
3,687,535.—OPTICAL DEMODULATION SYSTEM. AUG. 29, 1972. BEL. 0762859, CAN. 0944075, FRA. 7105649, GRB. 1343483, ITL. 0918450.
3,689,267.—SCREEN MAKING PROCESS UTIMZING ROTATION OF OPTICAL PLATE. SEPT. 5, 1972. CAN. 0950736.
3,697,184.—APPARATUS FOR EVALUATING THE RECORDING CHARACTERISTICS OF A THERMOPLASTIC PHOTORECEPTOR. OCT. 10, 1972. CAN. 1003484, GRB. 1389471.
3,776,995.—METHOD OF PRODUCING X-RAY DIFFRACTION GRATING. DEC. 4, 1973. CAN. 0944871, GRB. 1363262.
4,066,335.—VARIABLE DENSITY LENS. JAN. 3, 1978.

Class 17I 1

3,191,440.—PRESSURE GAUGE INSTRUMENT. JUNE 29, 1965.
3,249,760.—PRESSURE GAUGE INSTRUMENT. MAY 3, 1966.

Class 17I 2

3,416,865.—OPTICAL DENSITY MEASURING SYSTEM. DEC. 17, 1968.
3,609,047.—SINGLE BEAM PHOTOMETER SYSTEM WHEREIN THE ABSORBANCE OF A SAMPLE IS DETERMINED RELATIVE TO REFE. SEPT. 28, 1971.
4,054,391.—SPECULAR REFLECTANCE MICRODENSITOMETER. OCT. 18, 1977.

Class 17I 3

3,560,085.—APPARATUS FOR GRAPHIC DISTORATION. FEB. 2, 1971.
3,697,063.—DOCUMENT HANDLING APPARATUS. OCT. 10, 1972. GRB. 1369618.
4,128,332.—ILLUMINATOR. DEC. 5, 1978. GRB. 1494424.

Class 17J

D.236,733.—CURSOR POSITION CONTROLLER. SEPT. 9, 1975.
3,447,030.—COLD SEAL LAMP PRESSURE REGULATION. MAY 27, 1969.
3,642,377.—COLOR PRINTING SYSTEM. FEB. 15, 1972.
3,733,123.—METHOD AND APPARATUS FOR ENCLOSING A LAMP. MAY 15, 1973. ARG. 0198292, AUS. 0466394, BEL. 0789338, FRA. 7234198, GRB. 1410046, ITL. 0967625, MEX. 0128585, SPN. 0409972, STZ. 0549825, SWD. 0360935.
3,775,006.—APPARATUS FOR OPTICAL COLOR SEPARATION. NOV. 27, 1973.
3,795,805.—APPARATUS FOR TESTING A CREDIT CARD. MAR. 5, 1974.
3,873,813.—CREDIT CARD. MAR. 25, 1975.
3,892,963.—TRANSDUCER FOR A DISPLAY-ORIENTED POINTING DEVICE. JULY 1, 1975. FRA. 7440265.
3,915,553.—ELECTROOPTIC COLOR FILTER SYSTEM. OCT. 28, 1975.
3,936,179.—SUPPORT STRUCTURE FOR A DUPLICATOR OPTICAL SYSTEM. FEB. 3, 1976.
3,951,521.—REVERSIBLE RADIANT ENERGY FILTER AND PROCESS OF USING SAME. APR. 20, 1976.
3,977,785.—METHOD & APP FOR INHIBITING THE OPERATION OF A COPYING MACHINE. AUG. 31, 1976.
4,071,323.—DIFFUSION CRUCIBLE AND SLAB MEMBER WITH COMMON METAL COMPONENT IN THE VAPOR PHASE. JAN. 31, 1978.
4,071,396.—CONTROLLED ATMOSPHERE PROCESS FOR ALTERING THE NONSTOICHIOMETRY OF CRYSTALLINE MEMBERS. JAN. 31, 1978.
4,183,094.—OPTICAL STORAGE MEDIUM USING THE FREQUENCY DOMAIN. JAN. 8, 1980.
4,184,170.—LIGHT EMITTING DIODE. JAN. 15, 1980.

Class 18

3,736,133.—TRANSPARENT INK - ABSORBENT LAQUERS. MAY 29, 1973. ARG. 0193996, CAN. 0985583. GRB. 1390137, MEX. 0127276. VZL. 0033577.
3,738,832.—COLOR ELECTROPHOTOGRAPHIC PROCESS EMPLOYING LIQUID DEVELOPER CONTAINING GELATINAIN. JUNE 12, 1973.
3,860,484.—ENZYME STABILIZATION. JAN. 14, 1975.
3,985,666.—PLASTIC MATERIALS MIXED WITH POLAR GROUP CONTAINING MATERIALS. OCT. 12, 1976. ARG. 0195541, BEL. 0781970, CAN. 0976742, FRA. 7213873, GRB. 1396141, ITL. 0951326, MEX. 0126158, VZL. 0032937.
4,080,332.—ELECTRICALLY CONDUCTIVE COMPOUNDS. MAR. 21, 1978.
4,240,987.—CHEMICAL PROCESS. DEC. 23, 1980.
4,252,671.—PREPARATION OF COLLOIDAL IRON DISPERSIONS BY THE POLYMER-CATALYZED DECOMPOSITION OF IRON CARBONYL AND IRON ORGANOCARBONYL COMPOUNDS. FEB. 24, 1981.
4,252,672.—PREPARATION OF COLLOIDAL IRON DISPERSIONS BY THE POLYMER-CATALYZED DECOMPOSITION OF IRON CARBONYL AND IRON ORGANOCARBONYL COMPOUNDS. FEB. 24, 1981.
4,252,673.—PREPARATION OF COLLOIDAL COBALT DISPERSIONS BY THE POLYMER-CATALYZED DECOMPOSITION OF COBALT CARBONYL AND COBALT ORGANOCARBONYL COMPOUNDS. FEB. 24, 1981.
4,252,674.—PREPARATION OF COLLOIDAL COBALT DISPERSIONS BY THE POLYMER-CATALYZED DECOMPOSITION OF COBALT CARBONYL AND COBALT ORGANOCARBONYL COMPOUNDS. FEB. 24, 1981.
4,252,675.—PREPARATION OF COLLOIDAL GROUP VI-A TRANSITION METAL DISPERSIONS BY THE POLYMER-CATALYZED DECOMPOSITION OF CARBONYL COMPOUNDS THEREOF. FEB. 24, 1981.
4,252,677.—PREPARATION OF COLLOIDAL DISPERSIONS OF NICKEL, PALLADIUM AND PLATINUM BY THE POLYMER-CATALYZED DECOMPOSITION OF CARBONYL COMPOUNDS THEREOF. FEB. 24, 1981.
4,252,678.—PREPARATION OF COLLOIDAL DISPERSIONS OF RUTHENIUM, RHODIUM, OSMIUM AND IRIDIUM BY THE POLYMER-CATALYZED DECOMPOSITION OF CARBONYL CLUSTER COMPOUNDS THEREOF. FEB. 24, 1981.

Class 18A

3,238,150.—PHOTOCONDUCTIVE CADMIUM SULFIDE POWDER AND METHOD FOR THE PREPARATION THEREOF. MAR. 1, 1966. CAN. 0712516, GRB. 1062022, JAP. 0486530.
3,402,177.—SUBSTITUTED 1-CYANO-2,3-PHTHALOYL-7,8-BENZOPYRPOCOLINES. SEPT. 17, 1968. AUS. 0435189, BEL. 0743896, CAN. 0812820, GRB. 1145373.
3,471,290.—PHOTOCHROMIC PHOTORESIST IMAGING. OCT. 7, 1969.

3,478,064.—1,5-BIS-SUBSTITUTED ALKYLAMINO-ANTHRAQUINONES. NOV. 11, 1969. ARG. 0145636, AUS. 0419687, BEL. 0683222, CAN. 0880309, FRA. 1484968, GRB. 1155986, ITL. 0771955, JAP. 0581828, MEX. 0092775, SPN. 0328428, STZ. 0461273, SWD. 0328188, VZL. 0021224.
3,482,973.—IMAGING SYSTEM. DEC. 9, 1969.
3,485,633.—ELECTROPHORETIC IMG PROC EMPL METALLIC LAKES OF FLUCRESCEIN DERIVATIVES AS ELECTRICLY PHOTOSENS. DEC. 23, 1969. AUS. 0444394, BEL. 0743641, CAN. 0848386, GER. 1572387, GRB. 1190965. JAP. 0586923.
3,562,248.—BISAZC FGMTS DRVD CPLRS CBTC CONDG 8-AMINO-2-NAPHTHOLS W/ DICARBOXYLIC ACID CHLORIDES. FEB. 9, 1971. ATR. 0302037, AUS. 0435392, BEL. 0743422, CAN. 0889836, FRA. 6944290, GER. 1717183, GRB. 1217905, ITL. 0879047, JAP. 0608727.
3,667,943.—QUINACRIDONE PIGMENTS IN ELECTROPHOTOGRAPHIC IMAGING. JUNE 6, 1972. ARO. 0184823, AUS. 0452663, BEL. 0737810, CAN. 0877882, EGR. 0077411, FRA. 6928700, GRB. 1278702, ITL. 0888005, JAP. 0683893, SPN. 0370720, STZ. 0519183, SWD. 0346396, TIW. 0005517, USR. 0351396.
3,667,944.—QUINACRIDONE PIGMENTS IN ELECTROPHOTOGRAPHIC RECORDING. JUNE 6, 1972. ARG. 0177369, AUS. 0452031, BEL. 0741159, CAN. 0884807, FRA. 6937223, GRB. 1286079, ITL. 0879710, JAP. 0693421, MEX. 0115407.
3,667,945.—QUINACRIDONE PIGMENTS IN ELECTROPHOTOGRAPHIC IMAGING. JUNE 6, 1972.
3,671,467.—SELENIUM CONTAINING POLYMERS. JUNE 20, 1972. ARG. 0190619, BEL. 0770689, CAN. 0941544, FRA. 7128500, GRB. 1364297, ITL. 9308410, SPN. 0393651. VZL. 0029342.
3,694,201.—METHOD FOR PHOTOCONDUCTIVE POWDER. SEPT. 26, 1972. BEL. 0777717, CAN. 0982808, FRA. 7201003, GRB. 1381162, ITL. 0946352.
3,708,292.—PI-FORM METAL PHTHALOCYANINE. JAN. 2, 1973. ARG. 0194234, BEL. 0783793, CAN. 0996931, GRB. 1396922, ITL. 0955644, MEX. 0128928.
3,708,293.—PI-FORM METAL-FREE PHTHALOCYANINE. JAN. 2, 1973. ARG. 0195167, BEL. 0783792, CAN. 0995211, GRB. 1395769, ITL. 0955643, MEX. 0131970, VZL. 0034272.
3,837,850.—PHOTOCONDUCTIVE BUTILE TITANIUM DIOXIDE. SEPT. 24, 1974.
3,867,145.—METHANOL AND HEAT TREATED ZINC OXIDE. FEB. 18, 1975.
3,905,958.—SELENIUM COMPOUNDS. SEPT. 16, 1975.
3,965,049.—ONE-STEP SYNTHESIS OF AROMATIC ORGANIC DISELENIDES. JUNE 22, 1976.
4,007,043.—PHOTOCONDUCTIVE ELEMENTS WITH COPOLYMER CHARGE TRANSPORT LAYERS. FEB. 8, 1977.
4,007,100.—PROCESS FOR PREPARATION OF SOLID PHASE DISPERSION OF PHOTOCONDUCTIVE MATERIALS. FEB. 8, 1977.
4,007,101.—PROCESS FOR PREPARATION OF SOLID PHASE DISPERSION OF PHOTOCONDUCTIVE MATERIALS. FEB. 8, 1977.
4,013,528.—PROCESS FOR PREPARATION OF SOLID PHASE DISPERSION OF PHOTOCONDUCTIVE MATERIALS. MAR. 22, 1977.
4,013,529.—PROCESS FOR PREPARATION OF SOLID PHASE DISPERSION OF PHOTOCONDUCTIVE MATERIALS. MAR. 22, 1977.
4,013,530.—PROCESS FOR PREPARATION OF SOLID PHASE DISPERSION OF PHOTOCONDUCTIVE MATERIALS. MAR. 22, 1977.
4,014,768.—PROCESS FOR PREPARATION OF SOLID PHASE DISPERSION OF PHOTOCONDUCTIVE MATERIALS. MAR. 29, 1977.
4,016,058.—PROCESS FOR PREPARATION OF SOLID PHASE DISPERSION OF PHOTOCONDUCTIVE MATERIALS. APR. 5, 1977.
4,028,203.—PROCESS FOR PREPARATION OF SOLID PHASE DISPERSION OF PHOTOCONDUCTIVE MATERIALS. JUNE 7, 1977.
4,030,991.—PROCESS FOR PREPARATION OF SOLID PHASE DISPERSION OF PHOTOCONDUCTIVE MATERIALS. JUNE 21, 1977.
4,030,992.—PROCESS FOR PREPARATION OF SOLID PHASE DISPERSION OF PHOTOCONDUCTIVE MATERIALS. JUNE 21, 1977.
4,030,993.—PROCESS FOR PREPARATION OF SOLID PHASE DISPERSION OF PHOTOCONDUCTIVE MATERIALS. JUNE 21, 1977.
4,046,564.—ELECTROPHOTOGRAPHIC IMAGING MEMBERS WITH PHOTOCONDUCTIVE LAYER CONTAINING ELECTRON ACCEPTOR. SEPT. 6, 1977.
4,047,947.—PROCESS FOR THE PREPARATION OF TRANSPARENCIES BY SELECTIVE DECOMPOSITION OF AN ORGANOSELENI. SEPT. 13, 1977.
4,075,012.—INTRACHAIN CHARGE TRANSFER COMPLEXES USE IN ELECTROPHOTOGRAPHIC IMAGING. FEB. 21, 1978.
4,098,984.—ELECTRON ACCEPTOR POLYMERS. JULY 4, 1978.
4,116,691.—ELECTROPHOTOGRAPHIC IMAGING MEMBER OF MONOMERS HAVING PENDANT ELECTRON ACCEPTOR GROUPS. SEPT. 26, 1978.
4,122,113.—9-FLUORENYL ACRYLATES. OCT. 24, 1978.
4,129,581.—MONOMERS HAVING PENDANT ELECTRON ACCEPTOR GROUPS-PROCESS FOR PREPARATION AND USE. DEC. 12, 1978.
4,143,225.—HOMOPOLYMERS OF A FLUORENONE DERIVATIVE HAVING PENDANT ELECTRON ACCEPTOR GROUPS. MAR. 6, 1979.
4,172,933.—MONOMERS HAVING PENDANT ELECTRON ACCEPTOR GROUPS—PROCESS FOR PREPARATION AND USE. OCT. 30, 1979.

Class 18A 1

3,384,488.—POLYCHROMATIC PHOTOELECTROPHORETIC IMAGING COMPOSITION. MAY 21, 1968.
3,447,922.—ELECTRICALLY PHOTOSENSITIVE PARTICLES USEFUL IN PHOTOELECTROPHORETIC AND XEROGRAPHIC IMAGING PROC. JUNE 3, 1969.
3,448,028.—N-SBSTUD-8,13-DIOXODINAPHTHO-2-1-B,2,3-D-FURAN-6-CARBOXAMIDES AS ELCTLY PTOSNSTV MITS IN ELCPHG. JUNE 3, 1969.
3,531,309.—COMPOSITIONS COMPRISING 1-CYANO-2,3-PHTHALOYL-7,8-BENZOPYRROCOLINES AND A CARRIER. SEPT. 29, 1970.
3,546,085.—PHOTOELECTROPHORETIC IMAGING PROCESS AND SUSPENSION. DEC. 8, 1970. BEL. 0710052, CAN. 0875493, FRA. 1568088, GER. 1622380, GRB. 1208812, ITL. 0823929, JAP. 0594741.

Class 18A 2

3,492,308.—PROCESS FOR PREPARING METAL FREE PHTHALOCYANINES - SYNTHESIS OF METAL-FREE PHTHALOCYANINE. JAN. 27, 1970. CAN. 0922708, GRB. 1216887, JAP. 0586926.
3,492,309.—SYNTHESIS OF ALPHA METAL-FREE PHTHALOCYANINE. JAN. 27, 1970. CAN. 0894803, GRB. 1206306, JAP. 0604155.
3,509,146.—PROCESS OF PREPARING PHTHALOCYANINE AND HETEROCYCLIC ANALOGUES. APR. 28, 1970. CAN. 0865117, GRB. 1232241, JAP. 0587395.
3,672,979.—METHOD OF PRODUCING A PHTHALOCYANINE PHOTOCONDUCTIVE LAYER. JUNE 27, 1972. ARG. 0184673, AUS. 0457271, BEL. 0761135, CAN. 0951697, FRA. 7047702, GRB. 1334060, ITL. 0914074, JAP. 0753795, MEX. 0119529, PLD. 0082204, PNM. 0002191, SPN. 0386759, STZ. 0571731, TIW. 0007180, VZL. 0032789.
3,761,261.—PHTHALOCYANINE DYE SENSITIZERS FOR ZINC OXIDE. SEPT. 25, 1973.
4,107,389.—FUSING SURFACE. AUG. 15, 1978. GRB. 1511272.
4,126,722.—FUSING SURFACE. NOV. 21, 1978. GRB. 1511272.
4,197,242.—POTASSIUM PHTHALOCYANINE COMPLEXES, METHOD OF PREPARATION, AND PHTHALOCYANINE PURIFICATION PROCESSES. APR. 8, 1980.

Class 18A 2A

RE.27,117.—METAL FREE PHTHALOCYANINE IN THE NEW X-FORM-RE OF 3,357,989-D1170. APR. 20, 1971.
3,594,163.—METHOD OF CONVERTING ALPHA PHTHALOCYANINE TO THE X FORM. JULY 20, 1971.
3,657,272.—PROCESS FOR PREPARING X-FORM METAL FREE PHTHALOCYANINE. APR. 18, 1972.
3,816,118.—ELECTROPHOTOGRAPHIC ELEMENT CONTAINING PHTHALOCYANINE. JUNE 11, 1974. ARG. 0156316, CAN. 0890855, FRA. 0091579, GRB. 1175451, ITL. 0809972, JAP. 0820183, MEX. 0115884, VZL. 0024012.
3,862,127.—PROCESS. JAN. 21, 1975. AUS. 0453518, BEL. 0754407, FRA. 7028418, GRB. 1268574, ITL. 0929169, JAP. 0727963, SPN. 0382366.
3,903,107.—DIRECT ALPHA TO X PHASE CONVERSION OF METAL CONTAINING PHTHALOCYANINE. SEPT. 2, 1975. BEL. 0815632, SAF. 0743536.
3,927,026.—PROCESS OF MAKING X-FORM METAL PHTHALOCYANINE. DEC. 16, 1975. CAN. 0916703, GRB. 1312946, JAP. 0693981.

3,932,180.—DIRECT ALPHA TO X PHASE CONVERSION OF METAL-FREE PHTHALOCYANINE. JAN. 13, 1976. BEL. 0815632, SAF. 0743536.
3,932,454.—PROCESS OF MAKING HEXAGONAL ALPHA METAL-FREE PHTHALOCYANINE. JAN. 13, 1976. CAN. 0918152, GRB. 1327084, JAP. 0752724.
4,031,109.—METHOD FOR THE PREPARATION OF X-FORM METAL PHTHALOCYANINE AND X-FORM METAL FREE COMPOUNDS. JUNE 21, 1977. ARG. 0188048.
4,098,795.—METHOD FOR THE PREPARATION OF X-FORM METAL FREE PHTHALOCYAMINE. JULY 4, 1978. ARG. 182328, BEL. 737989, CAN. 899870, FRA. 6928871, GER. 1943381, GRB. 1280843, ITL. 870314, JAP. 654041, MEX. 116011.

Class 18A 3

3,447,922.—ELECTRICALLY PHOTOSENSITIVE PARTICLES USEFUL IN PHOTOELECTROPHORETIC AND XEROGRAPHIC IMAGING PROC. JUNE 3, 1969.
3,448,028.—N-SBSTUD-8, 13-DIOXODINAPHTHO-2-1-B, 2, 3-D-FURAN-6-CARBOXAMIDES AS ELCTLY PTOSNSTV MTLS IN ELCPHG. JUNE 3, 1969.

Class 18A 4

3,384,632.—ARYLAZO-4-ISOPROPOXY-1-NAPHTHOL COMPOUNDS. MAY 21, 1968. BEL. 0743897, CAN. 0787920, FRA. 1473703, GER. 1644400, GRB. 1145374, ITL. 0764015, JAP. 0578398.
3,574,182.—CALCIUM SALT OF 6-BROMO-1-1-SULFO-2-NAPHTHYLAZO-2-NAPHTHOL. APR. 6, 1971. ARG. 0168131, ATR. 0302812, AUS. 0429649, BEL. 0710053, CAN. 0878483, CHL. 0024254, CLB. 0018785, DNK. 0128493, FIN. 0049711, FRA. 1556484, GRB. 1197374, GRK. 0036648, IND. 0114221, ISR. 0029376, ITL. 0823989, JAP. 0605213, LXB. 0055364, MEX. 0099564, NOR. 0129593, NZL. 0151403, PRU. 0009483, PTG. 0049036, SAF. 0068559, SPN. 0349965, STZ. 0524844, SWD. 0351737, URG. 0008893, VZL. 0032776.

Class 18B

3,467,634.—ORGANOSILICON TERPOLYMERS AND PROCESS. SEPT. 16, 1969. ARG. 0165758, AUS. 0417109, BEL. 0702403, BRA. 6790950, CAN. 0857389, FRA. 1534183, GRB. 1200756, HOL. 0826202, ITL. 0826202, JAP. 0671041. MEX. 0100136, NOR. 0125392, SPN. 0343902, STZ. 0484210, SWD. 0339752, VZL. 0025437.
3,671,467.—SELENIUM CONTAINING POLYMERS. JUNE 20, 1972. ARG. 0190619, BEL. 0770689, CAN. 0941544, FRA. 7128500, GRB. 1364297, ITL. 9308410, SPN. 0393651, VZL. 0029342.
3,725,505.—PYRENE CONTAINING POLYMERS PREPARED BY ANIONIC POLYMERIZATION. APR. 3, 1973. ARG. 0183776, AUS. 0459733, BEL. 0770501, CAN. 0986650, FRA. 7127963, GRB. 1359045, ITL. 0930707, MEX. 0120152, SPN. 0393582, VZL. 0031959.
3,776,760.—METHOD FOR MANUFACTURING A TETRAFLUOROETHLENE POLYMER-COATED ROLL. DEC. 4, 1973. ARG. 0199302, ATR. 0335842, AUS. 0165141, BEL. 0789728, CAN. 0990149, GRB. 1410025, NZL. 0168554, SAF. 0727133, STZ. 0028514.
3,852,861.—SURFACES WITH FLUOROCARBON PROCESS FOR MULTIPLE COATING RESINS. DEC. 10, 1974. ARG. 0199302, ATR. 0335842, AUS. 0165141, BEL. 0789728, CAN. 0990149, GRB. 1410025, NZL. 0168554, SAF. 0727133, STZ. 0028514.
3,860,484.—ENZYME STABILIZATION. JAN. 14, 1975.
3,864,144.—PROCESS FOR PREPARATION OF PHOTOCONDUCTIVE FILMS FROM INTRACTABLE MATERIALS. FEB. 4, 1975. FRA. 7408936, GRB. 1414158, ITL. 1010695, TIW. 0008534.
3,877,936.—PHOTOCONDUCTIVE COPOLYMER OF N-VINYLCARBAZOLE AND N-VINYLPHTHALIMIDE. APR. 15, 1975. BEL. 0812436, FRA. 7409307, GRB. 1444048, ITL. 1010697, SPN. 0424411.
3,879,198.—ELECTROPHOTOGRAPHIC AMBIPOLAR PHOTOCONDUCTIVE COMPOSITION AND IMAGING METHOD. APR. 22, 1975. FRA. 7403086, GRB. 1446966.
3,882,087.—ORGANIC PHOTOCONDUCTIVE MATERIAL. MAY 6, 1975.
3,883,488.—2-VINYL-9-DICYANOMETHYLENE-FLUORENE AND DERIVATIVES THEREOF. MAY 13, 1975.
3,884,825.—IMAGING COMPOSITION. MAY 20, 1975. AUS. 0467835, BEL. 0802879, CAN. 099593, FRA. 7328589, GRB. 1437041, ITL. 0991465, SPN. 0417382.
3,895,945.—PROCESS FOR PREPARATION OF A DYESTUFF SENSITIZED PHOTOCONDUCTIVE COMPOSITION. JULY 22, 1975.
3,899,328.—ACTIVE MATRIX AND INTRINSIC PHOTOCONDUCTIVE POLYMER OF A LINEAR POLYSILOXANE. AUG. 12, 1975. ITL. 1010430.
3,943,108.—PHOTOCONDUCTIVE COMPOSITION OF AN ALDEHYDE CONDENSATE. MAR. 9, 1976.
3,950,168.—FIXING POWDER IMAGES-FUSING AIDES FOR HYBRID FIX. APR. 13, 1976.
3,951,658.—COLOR MODIFYING IMAGING METHOD AND ARTICLE. APR. 20, 1976.
3,954,906.—AMBIPOLAR PHOTOCONDUCTIVE COMPOSITION AND IMAGING METHOD. MAY 4, 1976. FRA. 7403086, GRB. 1446966.
3,965,049.—ONE-STEP SYNTHESIS OF AROMATIC ORGANIC DISELENIDES. JUNE 22, 1976.
3,967,962.—DEVELOPING WITH TONER POLYMER HAVING CRYSTALLINE AND AMORPHOUS SEGMENTS. JULY 6, 1976.
3,970,602.—COPOLYMERS OF N-VINYLCARBAZOLE AND N-VINYLPHTHALIMIDE AND DERIVATIVES THEREOF. JULY 20, 1976. BEL. 0812436. FRA. 7409307, GRB. 1444048, ITL. 1010697, SPN. 0424411.
3,994,994.—IMPROVED PROCESS FOR PREPARATION OF BLOCK COPOLYMERS FROM VINYLCARBOZOLES & OTHER ADDITION MONO. NOV. 30, 1976.
4,007,043.—PHOTOCONDUCTIVE ELEMENTS WITH COPOLYMER CHARGE TRANSPORT LAYERS. FEB. 8, 1977.
4,009,151.—POLYMERS OF 2-VINLYFLUORENONE AND DERIVATIVES THEREOF. FEB. 22, 1977.
4,011,266.—2-VINYL-FLUORENONE AND DERIVATIVES THEREOF. MAR. 8, 1977.
4,045,413.—POSSIBLE ACTIVE MATRIX POLYMERS. AUG. 30, 1977. FRA. 7432710.
4,046,564.—ELECTROPHOTOGRAPHIC IMAGING MEMBERS WITH PHOTOCONDUCTIVE LAYER CONTAINING ELECTRON ACCEPTOR. SEPT. 6, 1977.
4,071,670.—METHOD OF SIZING MONOMER DROPLETS FOR SUSPENSION POLYMERIZATION TO FORM SMALL PARTICLES. JAN. 31, 1978. BEL. 857223.
4,075,012.—INTRACHAIN CHARGE TRANSFER COMPLEXES USE IN ELECTROPHOTOGRAPHIC IMAGING. FEB. 21, 1978.
4,098,984.—ELECTRON ACCEPTOR POLYMERS. JULY 4, 1978.
4,116,691.—ELECTROPHOTOGRAPHIC IMAGING MEMBER OF MONOMERS HAVING PENDANT ELECTRON ACCEPTOR GROUPS. SEPT. 26, 1978.
4,122,113.—9-FLUORENYL ACRYLATES. OCT. 24, 1978.
4,129,581.—MONOMERS HAVING PENDANT ELECTRON ACCEPTOR GROUPS-PROCESS FOR PREPARATION AND USE. DEC. 12, 1978.
4,143,225.—HOMOPOLYMERS OF A FLUORENONE DERIVATIVE HAVING PENDANT ELECTRON ACCEPTOR GROUPS. MAR. 6, 1979.
4,172,933.—MONOMERS HAVING PENDANT ELECTRON ACCEPTOR GROUPS—PROCESS FOR PREPARATION AND USE. OCT. 30, 1979.

Class 18C

4,074,143.—OPTOELECTRONIC DEVICE WITH OPTICAL FEEDBACK. FEB. 14, 1978. FRA. 7631992.
4,252,671.—PREPARATION OF COLLOIDAL IRON DISPERSIONS BY THE POLYMER-CATALYZED DECOMPOSITION OF IRON CARBONYL AND IRON ORGANOCARBONYL COMPOUNDS. FEB. 24, 1981.
4,252,672.—PREPARATION OF COLLOIDAL IRON DISPERSIONS BY THE POLYMER-CATALYZED DECOMPOSITION OF IRON CARBONYL AND IRON ORGANOCARBONYL COMPOUNDS. FEB. 24, 1981.

Class 18C 1

RE.27,480.—AUTOMATIC DEVELOPMENT CONTROLLER -RE OF 3,376,854-D986. SEPT. 19, 1972.
3,884,825.—IMAGING COMPOSITION. MAY 20, 1975. AUS. 0467835. BEL. 0802879, FRA. 7328589, GRB. 1437041, ITL. 0991465, SPN. 0417382.

Class 18C 1A

3,720,617.—AN ELECTROSTATIC DEVELOPER CONTAINING MODIFIED SILICON DIOXIDE PARTICLES. MAR. 13, 1973. ARG. 0189666, ATR. 0321104, AUS. 0463862, BEL. 0767359, CAN. 0941212, CHL. 0026780, EGR. 0093928, FRA. 7118950, GRB. 1347318, ITL. 0926884, MEX. 0131403, NZL. 0163670, PNM. 0002393, PRU. 0011824, STZ. 0567746, SWD. 0366402, TIW. 0006149, USR. 0460634, VZL. 0032423.

3,819,367.—IMAGING SYSTEM. JUNE 25, 1974. ARG. 0189666, ATR. 0321104, AUS. 0463862, BEL. 0767359, CAN. 0941212, CHL. 0026780, EGR. 0093928, FRA. 7118950, GRB. 1347318, ITL. 0926884, MEX. 0131403, NZL. 0163670, PNM. 0002393, PRU. 0011824, STZ. 0567746, SWD. 0366402, TIW. 0006149. USR. 0460634, VZL. 0032423.

3,820,986.—LIQUID DEVELOPMENT METHOD AND MATERIALS. JUNE 28, 1974.

3,833,364.—METHOD OF DEVELOPING ELECTROSTATIC IMAGE CHARGE. SEPT. 3, 1974.

3,850,830.—LIQUID DEVELOPER CONTAINING EXTENDER BODY PARTICLES. NOV. 26, 1974.

3,900,588.—NON-FILMING DUAL ADDITIVE DEVELOPER. AUG. 19, 1975. BEL. 0825924, SPN. 0435074.

4,051,077.—NON FILMING DUAL ADDITIVE DEVELOPER. SEPT. 27, 1977. AUS. 487989, BEL. 825924, FRA. 7505307, GRB. 1494360, SPN. 435074.

Class 18C 1B

3,577,345.—SOLID XEROGRAPHIC DEVELOPER. MAY 4, 1971. ARG. 0172448, ATR. 0325417, AUS. 0424173, BAH. 0000095, BEL. 0716084, BOL. 0032708, CAN. 0902983, CHL. 0025923, CLB. 0017674, DOR. 0001461, ELS. 0001064, FRA. 1567731, GRB. 1232117, GRK. 0037628, GUA. 0002003, HOL. 0148714, IND. 0116209, ISR. 0030116, ITL. 0851653, JAM. 0001848, JAP. 0623002, LXB. 0056197, MEX. 0119320, NOR. 0131653, NZL. 0164353, PNM. 0002062. PRU. 0009911, PTG. 0049749, SPN. 0354686, STZ. 0516180, SWD. 0338238, TIW. 0005096, TRD. 0000057, TRK. 0015620, URG. 0009286, VZL. 0023666.

3,590,000.—SOLID DEVELOPER FOR LATENT ELECTROSTATIC IMAGES. JUNE 29, 1971. ARG. 0172453, ATR. 0288860, BAH. 0000093, BEL. 0716083, BOL. 33998, CAN. 0902984, CHL. 0024050, DOR. 0001460, ECD. 0000198, ELS. 0001062, FRA. 1567721, GER. 1772570, GRB. 1232118, GRK. 0037629, GUA. 0002095, HOL. 0151523, IND. 0116210, ISR. 0030117, ITL. 0851651, JAM. 0002094, JAP. 0655407, LXB. 0056196, MEX. 0104566, NZL. 0164356, PLP. 0007690, PNM. 0002083, PRU. 0009495, PTG. 0049748, SPN. 0354685, STZ. 0519737, SWD. 0357071, TIW. 0004940, TRD. 0000058, TRK. 0015606, URG. 0009287, VZL. 0032392.

3,653,893.—IMAGING SYSTEM. APR. 4, 1972.

3,655,374.—IMAGING PROCESS EMPLOYING NOVEL SOLID DEVELOPER MATERIAL. APR. 11, 1972.

3,681,107.—DEVELOPMENT OF ELECTROSTATOGRAPHIC IMAGES. AUG. 1, 1972.

3,856,692.—LIQUID ELECTROSTOGRAPHIC DEVELOPER COMPOSITIONS. DEC. 24, 1974. CAN. 0940361, GRB. 1332674.

3,900,588.—NON-FILMING DUAL ADDITIVE DEVELOPER. AUG. 19, 1975. BEL. 0825924, SPN. 0435074.

3,900,589.—AN ELECTROSTATOGRAPHIC IMAGING PROCESS. AUG. 19, 1975. AUS. 0467835, BEL. 0802879, CAN. 0995963, FRA. 7328589, GRB. 1437041, ITL. 0991465, SPN. 0417382.

4,002,570.—ELECTROPHOTOGRAPHIC DEVELOPER WITH POLYVINYLIDENE FLUORIDE ADDITIVE. JAN. 11, 1977

4,051,077.—NON FILMING DUAL ADDITIVE DEVELOPER. SEPT. 27, 1977. AUS. 487989, BEL. 825924, FRA. 7505307, GRB. 1494360, SPN. 435074.

4,147,541.—ELECTROSTATIC IMAGING MEMBER WITH ACID LUBRICANT. APR. 3, 1979. AUS. 467835. BEL. 802879. CAN. 995963. FRA. 7328588. GRB. 1437041. ITL. 991465. SPN. 417382. USR. 637099.

Class 18C 2

4,038,076.—ELECTROSTATOGRAPHIC DEVELOPMENT. JULY 26, 1977. ARG. 0192480, AUS. 0466319, BEL. 0793098, CAN. 0985552, FRA. 7245403, GRB. 1417179, ITL. 0973327, SPN. 0410171, STZ. 0028663, SWD 7216977.

Class 18C 2A

3,723,114.—THERMOSETTING ELCTRSTGRPHC DVLPR OF CARRIER/PREPOLYMER OF DIALLYL PHTHALATE ISOPHTHALATE AND MXTR. MAR. 27, 1973. ARG. 0185089, BEL. 0762507, CAN. 0970195, FRA. 7104349, GRB. 1344197, ITL. 0918244, MEX. 0122234.

3,806,339.—LIQUID DEVELOPER COMPOSITION. APR. 23, 1974.

3,942,979.—IMAGING SYSTEM. MAR. 9, 1976.

3,965,021.—ELECTROSTATOGRAPHIC DEVELOPMENT-POLYBLEND TONERS. JUNE 22, 1976.

3,967,962.—DEVELOPING WITH TONER POLYMER HAVING CRYSTALLINE AND AMORPHOUS SEGMENTS. JULY 6, 1976.

3,969,251.—DEVELOPER MIXTURE. JULY 13, 1976.

4,254,205.—POSITIVE TONERS CONTAINING ALKYL PICOLINIUM COMPOUNDS AS CHARGE CONTROL AGENTS. MAR. 3, 1981.

4,256,824.—METHOD USING POSITIVELY CHARGED ELECTROPHOTOGRAPHIC TONER CONTAINING AMIDO DIAXYL HYDROXY AMMONIUM COMPOUND. MAR. 17, 1981.

4,263,389.—POSITIVELY CHARGED TONERS CONTAINING VINYL PYRROLIDONE POLYMERS. APR. 21, 1981.

4,264,702.—POSITIVE TONERS CONTAINING ALKYL MORPHOLINIUM COMPOUNDS AS CHARGE CONTROL AGENTS. APR. 28, 1981.

4,269,922.—POSITIVE TONERS CONTAINING LONG CHAIN HYDRAZINIUM COMPOUNDS. MAY 26, 1981.

Class 18C 2A 1

3,239,465.—XEROGRAPHIC DEVELOPER. MAR. 8, 1966. CAN. 0630295, GRB. 0952166.

Class 18C 2A 2

3,239,465.—XEROGRAPHIC DEVELOPER. MAR. 8, 1966. CAN. 0630295, GRB. 0952166.

Class 18C 2B

3,533,835.—ELECTROSTATOGRAPHIC DEVELOPER MIXTURE. OCT. 13, 1970. ARG. 0181296, AUS. 0417746, BEL. 0704918, CAN. 0900769, CHL. 0024909, CLB. 0017825, FRA. 1540695, GRB. 1211865, IND. 0112449, ITL. 0814857, MEX. 0100137, PRU. 0009323, SWD. 0323583, URG. 0009011, VZL. 0023668.

3,591,503.—ELECTROSTATOGRAPHIC DEVELOPER. JULY 6, 1971. ARG. 0172143, ATR. 0287491, AUS. 0418556, BEL. 0713751, CAN. 0879020, CHL. 0024256, CLB. 0017933, FRA. 1560849, GRB. 1225980, GRK. 0038397, IND. 0115457, ITL. 0833710. LXB. 0055904, MEX. 0111625, NOR. 0128297, NZL. 0152196, PLP. 0008847, PRU. 0009319, PTG. 0049455, SAF. 0682386, SPN. 0352810, STZ. 0508903, SWD. 0333868, URG. 0009139, VZL. 0023688.

3,595,794.—ELECTROSTATOGRAPHIC DEVELOPER. JULY 27, 1971. ARG. 0169109, ATR. 0290986, AUS. 0418156, BEL. 0713752, CAN. 0879021, CHL. 0024482, FRA. 1582855, GRB. 1227471, IND. 0115458, ITL. 0883043, LXB. 0055894, MEX. 0115899, NOR. 0128036, NZL. 0152195, PLP. 0007966, PRU. 0009335, PTG. 0049154, SAF. 0682358, SPN. 0352811, STZ. 0505410, SWD. 0331633, URG. 0009283, VZL. 0023687.

3,627,522.—DEVELOPER COMPOSITION AND METHOD OF USE. DEC. 14, 1971.

3,672,928.—ELECTROSTATOGRAPHIC DEVELOPERS HAVING CARRIERS COMPRISING POLYSTER COATED CORES. JUNE 27, 1972. ARG. 0184669, BEL. 0762415, CAN. 0941209, FRA. 7103845, GRB. 1344365, ITL. 0918191, JAP. 0764506.

3,704,066.—REFLEX EXPOSURE MEDIUM. NOV. 28, 1972.

3,725,283.—ELECTROSTATOGRAPHIC DEVELOPER CONTAINING UNCOATED GLASS CERAMIC CARRIER PARTICLES. APR. 3, 1973. BEL. 0777720, CAN. 0973745, FRA. 7201006, GRB. 1376457, ITL. 0946358.

3,767,578.—CARRIER MATERIAL FOR ELECTROSTATOGRAPHIC. OCT. 23, 1973. ARG. 0198052, ATR. 0322978, AUS. 0461667, BEL. 0784452, CAN. 0986351, CHL. 0027640, FRA. 7220690, GRB. 1397445, ITL. 0959791, MEX. 0127643, SPN. 0403664, STZ. 0546969, SWD. 7207389, TIW. 0006042, VZL. 0032064.

3,847,604.—ELECTROSTATIC IMAGING PROCESS USING MODULAR CARRIERS. NOV. 12, 1974. ARG. 0198052, ATR. 0322978, AUS. 0461667, BEL. 0784452, CAN. 0986351, CHL. 0027640, FRA. 7220690, GRB. 1397445, ITL. 0959791, MEX. 0127643, SPN. 0403664, STZ. 0546969, SWD. 7207389, TIW. 0006042, VZL. 0032064.

3,849,127.—AN ELECTROSTATOGRAPHIC PROCESS IN WHICH COATED CARRIER PARTICLES ARE USED. NOV. 19, 1974.

3,857,792.—ELECTROSTATIC DEVELOPER MIXTURE WITH A COATED CARRIER. DEC. 31, 1974.

3,914,181.—ELECTROSTATOGRAPHIC DEVELOPER MIXTURES COMPRISING FERRITE CARRIER BEADS. OCT. 21, 1975. ARG. 0194244, AUS. 0471676, BEL. 0785913, CAN. 1000477, GRB. 1398871, ITL. 0962400, MEX. 0126285, SPN. 0404423, VZL. 0032940.

3,923,503.—ELECTROSTATIC LATENT IMAGE DEVELOPMENT EMPLOYING STEEL CARRIER PARTICLES. DEC. 2, 1975. ARG. 0181848, ATR. 0316987, AUS. 0456820, BAH. 0000162, BEL. 0752230, CAN. 0940360, CHL. 0025833, EGR. 0095180, FRA. 7021985, GRB.

1312806, ITL. 0894287, JAP. 0728825, MEX. 0121681, NOR. 0131364, NZL. 0160479, PLD. 0081013, PNM. 0002264, PTG. 0053978, SAF. 0704155, SPN. 0380913, STZ. 0548625, SWD. 0351058, TIW. 0006837, USR. 0457235.

3,939,086.—HIGHLY CLASSIFIED OXIDIZED DEVELOPER MATERIAL. FEB. 17, 1976. ARG. 0181848, ATR. 0316987, AUS. 0456820, BAH. 0000162, BEL. 0752230, CAN. 0940360, CHL. 0025833, EGR. 0095180, FRA. 7021985, GRB. 1312806, ITL. 0894287, JAP. 0728825, MEX. 0121681, NOR. 0131364, NZL. 0160479, PLD. 0081013, PNM. 0002264, PTG. 0053978, SAF. 0704155. SPN. 0380913, STZ. 0548625, SWD. 0351058, TIW. 0006837, USR. 0457235.

3,942,979.—IMAGING SYSTEM. MAR. 9, 1976.

3,969,251.—DEVELOPER MIXTURE. JULY 13, 1976.

4,018,601.—ELECTROSTATOGRAPHIC MAGNETIC BRUSH IMAGING PROCESS EMPLOYING CARRIER BEADS COMPRISING HIGH NICK. APR. 19, 1977.

Class 18C 3

4,224,396.—MAGNETIC TONER MATERIALS CONTAINING QUATERNARY AMMONIUM POLYMERS. SEPT. 23, 1980.

Class 18C 4

3,467,634.—ORGANOSILICON TERPOLYMERS AND PROCESS. SEPT. 16, 1969. ARG. 0165758, AUS. 0417109, BEL. 0702403, BRA. 6790950, CAN. 0857389, FRA. 1534183, GRB. 1200756, HOL. 0826202, ITL. 0826202, JAP. 0671041, MEX. 0100136, NOR. 0125392, SPN. 0343902, STZ. 0484210, SWD. 0339752, VZL. 0025437.

3,526,533.—COATED CARRIER PARTICLES. SEPT. 1, 1970. ARG. 0161341, AUS. 0418867, BEL. 0702404, CAN. 0878413, FRA. 1534184, GRB. 1205051, ITL. 0826203, JAP. 0578401, MEX. 0120334, NOR. 0122818, SPN. 0343903, STZ. 0486054, SWD. 0308987, VZL. 0032393.

3,533,835.—ELECTROSTATOGRAPHIC DEVELOPER MIXTURE. OCT. 13; 1970. ARG. 0181296, AUS. 0417746, BEL. 0704918, CAN. 0900769, CHL. 0024909, CLB. 0017825, FRA. 1540695, GRB. 1211865, IND. 0112449, ITL. 0814857, MEX. 0100137, PRU. 0009323, SWD. 0323583, URG. 0009011, VZL. 0023668.

3,713,819.—XEROGRAPHIC IMAGING AND DEVELOPMENT USING METAL OXIDE CARRIER PART. JAN. 30, 1973.

3,730,707.—METHOD OF DEVELOPING LATENT IMAGES. MAY 1, 1973.

3,752,666.—ELECTROSTATIC IMAGING PROCESS USING CARRIER BEADS CONTAINING CONDUCTIVE PARTICLES. AUG. 14, 1973.

3,839,029.—ELECTROSTATOGRAPHIC DEVELOPMENT WITH FERRITE DEVELOPER MATERIALS. OCT. 1, 1974. ARG. 0194244, AUS. 0471676, BEL. 0785913, CAN. 1000477, GRB. 1398871, ITL. 0962400, MEX. 0126285, SPN. 0404423, VZL. 0032940.

3,849,182.—HIGHLY SHAPE-CLASSIFIED OXIDIZED LOW CARBON HYPEREUTECTOID ELECTROSTATOGRAPHIC STEEL CARRIER PA. NOV. 19, 1974. ARG. 0181848, ATR. 0316987, AUS. 0456820, BAH. 0000162, BEL. 0752230, CAN. 0940360, CHL. 0025833, EGR. 0095180, FRA. 7021985, GRB. 1312806, ITL. 0894287, JAP. 0728825, MEX. 0121681, NOR. 0131364, NZL. 0160479, PLD. 0081013, PNM. 0002264, PTG. 0053978. SAF. 0704155, SPN. 0380913, STZ. 0548625, SWD. 0351058, TIW. 0006837, USR. 0457235.

3,850,663.—CELLULOSE COATED CARRIERS. NOV. 26, 1974. ARG. 0183677, AUS. 0458322, BEL. 0763987, CAN. 0941210, EGR. 0091603, FRA. 7108585, GRB. 1345027, ITL. 0922292, MEX. 0120027, PNM. 0002440, SAF. 0711547, STZ. 0557050, SWD. 0359940, TIW. 0008177, VZL. 0032931.

3,850,676.—COATED CARRIER PARTICLES FOR ELECTROSTATOGRAPHIC DEVELOPMENT. NOV. 26, 1974.

3,856,519.—TRANSFER OF TONER USING A VOLATILE INSULATING LIQUID. DEC. 24, 1974.

3,900,587.—IMAGING PROCESS EMPLOYING TREATED CARRIER PARTICLES. AUG. 19, 1975. CAN. 1007923.

3,916,064.—DEVELOPER MATERIAL. OCT. 28, 1975.

3,916,065.—ELECTROSTATOGRAPHIC CARRIER PARTICLES. OCT. 28, 1975.

3,989,648.—IMAGING SYSTEM. NOV. 2, 1976. CAN. 1007923.

4,019,903.—ELECTROSTATIC DEVELOPMENT. APR. 26, 1977. BEL. 0777715, CAN. 0973746, FRA. 7201001, GRB. 1376456, ITL. 0946359.

4,035,520.—IMAGING SYSTEMS. JULY 12, 1977

4,040,969.—HIGH SURFACE AREA CARRIER. AUG. 9, 1977. BEL. 829639, GRB. 1497732, SPN. 438084.

4,042,517.—ELECTROSTATOGRAPHIC DEVELOPER MIXTURE CONTAINING A THERMOSET ACRYLIC RESIN COATED CARRIER. AUG. 16, 1977.

4,065,585.—RENEWABLE CHOW FUSER COATING. DEC. 27, 1977. GRB. 1490252.

4,066,563.—COPPER - TETRA - 4 - (OCTADECYLSULFONOM- IDO) PHTHALOCYANINE ELECTROPHOTOGRAPHIC CARRIER. JAN. 3, 1978.

4,122,024.—CLASSIFIED TONER MATERIALS. OCT. 24, 1978. BEL. 829719. CAN. 1043149. FRA. 7516758. GRB. 1497731.

4,126,454.—IMAGING PROCESS UTILIZING HIGH SURFACE AREA CARRIER MATERIALS. NOV. 21, 1978.

Class 18C 5

3,788,994.—PRESSURE FIXABLE ELECTROSTATOGRAPHIC TONER. JAN. 29, 1974. ARG. 0200575, BEL. 0793247, CAN. 0985943, FRA. 7244381, GRB. 1406687, ITL. 0973323, SPN. 0410212, STZ. 0028529, VZL. 0032608.

3,804,764.—ELECTROSTATOGRAPHIC PRESSURE SENSITIVE POLYMERIC TONER. APR. 16, 1974. ARG. 0196320, AUS. 0464392, BEL. 0793554, CAN. 1011149, FRA. 7246575, GRB. 1417409, ITL. 0973325, SPN. 0410211, STZ. 0028568.

3,853,778.—TONER COMPOSITION EMPLOYING POLYMER WITH SIDE CHAIN CRYSTALLINITY. DEC. 10, 1974. AUS. 0465653, BEL. 0793639, CAN. 0998869, FRA. 7246888, GRB. 1423291, ITL. 0973330, SPN. 0410267, SWD. 7300003.

3,893,932.—PRESSURE FIXABLE TONER. JULY 8, 1975.

3,893,934.—SOLID DEVELOPER FOR ELECTROSTATIC LATENT IMAGES. JULY 8, 1975.

3,910,846.—METHOD OF PREPARING ELECTROSCOPIC TONER PARTICLES. OCT. 7, 1975. CAN. 0984074.

3,974,078.—AN ELECTROSTATE GRAPHIC DEVELOPMENT OF ENCAPSULATED MATERIALS. AUG. 10, 1976. ARG. 0196318, AUS. 0467046, BEL. 0792115, CAN. 1001884, FRA. 7239134, ITL. 0973326, MEX. 0128768, SPN. 0410205, STZ. 0028567, VZL. 0033139.

4,002,776.—IMAGING PROCESS EMPLOYING TONER PARTICLES CONTAINING ARYLSULPONAMIDE FORMALDEHYDE ADDUCT. JAN. 11, 1977.

4,161,454.—COATING MAGNETITE WITH POLYACID. JULY 17, 1979.

4,176,078.—FIELD DEPENDENT TONER HAVING CHROME COMPLEX COATED MAGNETIC PARTICLES. NOV. 27, 1979.

Class 18C 5A

3,345,293.—COLORED ELECTROSTATOGRAPHIC TONERS CONTAINING ORGANIC DYE PIGMENTS. OCT. 3, 1967. CAN. 0834674, GRB. 1074147, JAP. 0788652.

3,864,125.—ELECTROPHOTOGRAPHIC METHOD OF MAKING AN IMAGING MASTER. FEB. 4, 1975.

3,897,249.—TONERS FOR PHTHALOCYANINE PHOTORECEPTORS. JULY 29, 1975.

4,126,565.—TONERS FOR COLOR FLASH FUSERS CONTAINING A PERMANENT COLORANT AND A HEAT SENSITIVE DYE. NOV. 21, 1978.

4,218,530.—SINGLE COMPONENT MAGNETIC TONER. AUG. 19, 1980. CAN. 1105077.

4,229,512.—TONERS FOR COLOR FLASH FUSERS CONTAINING A PERMANENT COLORANT AND A HEAT SENSITIVE DYE. OCT. 21, 1980.

Class 18C 6

3,755,177.—PROCESS OF MAKING LIQUID ELECTROSTATIC DEVELOPERS CONTAINING GELATIN. AUG. 28, 1973.

3,790,485.—PROCESS FOR PRODUCING ELECTROPHOTOGRAPHIC LIQUID DEVELOPER. FEB. 5, 1974.

3,812,037.—LIQUID DEVELOPER COMPOSITION. MAY 21, 1974.

4,221,856.—ELECTROGRAPHIC TONER CONTAINING RESIN-COMPATIBLE QUATERNARY AMMONIUM COMPOUND. SEPT. 9, 1980.

Class 18C 6A

3,507,686.—METHOD OF COATING CARRIER BEADS. APR. 21, 1970. CAN. 0872190, GRB. 1239621, JAP. 0675782.

3,658,500.—METHOD OF PRODUCING GLASS BEADS FOR ELECTROSTATOGRAPHIC DEVELOPERS. APR. 25, 1972. CAN. 0916536, GRB. 1331485.

3,685,113.—DEVELOPER SYSTEM. AUG. 22, 1972. ARG. 0183679, BEL. 0764635, CAN. 0941211, FRA. 7110751, GRB. 1347568, ITL. 0922132, MEX. 0122432.

3,764,310.—METHOD OF PRODUCING ELECTROSTATOGRAPHIC DEVELOPER. OCT. 9, 1973.
3,789,796.—APPARATUS FOR PRODUCING DEVELOPER MATERIALS. FEB. 5, 1974.
3,908,046.—P-XYLYENE VAPOR PHASE POLYMERIZATION COATING OF ELECTROSTATOGRAPHIC PARTICLES. SEPT. 23, 1975.
3,940,514.—METHOD OF COATING ELECTROSTATOGRAPHIC CARRIER PARTICLES. FEB. 24, 1976.

Class 18C 6B

3,326,848.—SPRAY DRIED LATEX TONERS. JUNE 20, 1967. AUS. 0409084, BEL. 0666056, CAN. 0866260. FRA. 1451366, GRB. 1115653, ITL. 0717377, MEX. 0088140, SWD. 0340046.
3,338,991.—METHOD OF FORMING ELECTROSTATIC TONER PARTICLES. AUG. 29, 1967. FRA. 1450642, GRB. 1115634, HOL. 0142251, ITL. 0717378, JAP. 0539572.
3,502,582.—IMAGING SYSTEMS. MAR. 24, 1970. ARG. 0171952, BEL. 0726571, CAN. 0873934, FRA. 1569382, GRB. 1237095, ITL. 0835554, MEX. 0100704, VZL. 0032414.
3,740,334.—PROCESS OF PREPARING SOLID DEVELOPERS FOR ELECTROSTATIC LATENT IMAGES. JUNE 19, 1973.
3,830,750.—ENCPSLTNG SBSTNLY SLUBL PRTN OF CORE MATL IN SBSTNLY SLBLE SHELL MATL OF DFRNT SOLUBLTY. AUG. 20, 1974. AUS. 0466018, BEL. 0793246, CAN. 0983328, GRB. 1411954, ITL. 0973317, SPN. 0410224, STZ. 0028527.
3,936,517.—METHOD FOR REDUCING PARTICLE SIZE. FEB. 3, 1976.
4,016,099.—METHOD OF FORMING ENCAPSULATED TONER PARTICLES. APR. 5, 1977.
4,071,670.—METHOD OF SIZING MONOMER DROPLETS FOR SUSPENSION POLYMERIZATION TO FORM SMALL PARTICLES. JAN. 31, 1978. BEL. 857223.
4,077,804.—METHOD OF PRODUCING TONER PARTICLES BY IN-SITU POLYMERIZATION AND IMAGING PROCESS. MAR. 7, 1978.
4,097,620.—MAGNETIC TONER PARTICLE COATING PROCESS. JUNE 27, 1978.
4,142,981.—TONER COMBINATION FOR CARRIERLESS DEVELOPMENT. MAR. 6, 1979.
4,148,741.—POLYMERIZATION AND ATTRITION METHOD FOR PRODUCING TONER WITH REDUCED PROCESSING STEPS. APR. 10, 1979.
4,171,274.—ALTERATION OF TESSELATED MAGNETIC PARTICLES OF FRACTURE. OCT. 16, 1979.
4,192,902.—IN SITU COATING THEN SPRAY DRYING OF MAGNETIC TONER. MAR. 11, 1980.

Class 18D

3,666,429.—MATALLIZED AND BRAZED CERAMICS. MAY 30, 1972.
3,959,934.—COMPOSITION AND METHOD FOR REPAIRING SELENIUM PHOTORECEPTOR. JUNE 1, 1976.
3,971,169.—A METHOD FOR REPAIRING SELENIUM PHOTOCONDUCTORS. JULY 27, 1976.
4,062,658.—COMPOSITION & METHOD FOR REPAIRING SELENIUM PHOTORECEPTORS. DEC. 13, 1977.

Class 18E

3,950,168.—FIXING POWDER IMAGES-FUSING AIDES FOR HYBRID FIX. APR. 13, 1976.
4,025,341.—CHARGE TRANSFER OF FERROCENES HAVING LIGHT FILTERING PROPERTIES. MAY 24, 1977.

Class 20

3,916,167.—COUNTERS. OCT. 28, 1975.

Class 20A

3,751,693.—MOVING COIL MOTOR WITH NO SPRAY FLUX. AUG. 7, 1973. AUS. 3467604, BEL. 0795400, CAN. 0980395, GRB. 1424622, ITL. 0979062, SPN. 0411470.
3,769,467.—VIBRATION DAMPED TRANSDUCER HEAD ASSEMBLY. OCT. 30, 1973. ARG. 0195905, AUS. 0476996, BEL. 0795401, CAN. 0995355, GRB. 1417764, ITL. 0979063, MEX. 0135598, SPN. 0411538, STZ. 0558582, SWD. 7301915.
4,046,105.—LAMINAR DEEP WAVE GENERATOR. SEPT. 6, 1977.
4,076,417.—INTERLOCKING APPARATUS FOR AN OPTICAL SYSTEM AND REPRODUCING MACHINE. FEB. 28, 1978. HAT. 1604.

Class 20A 1

RE.27,313.—BELT TRACKING SYSTEM - RE OF 3,500,694-D2586. MAR. 21, 1972.
3,435,693.—BELT TRACKING DEVICE. APR. 1, 1969. ARG. 0168295, ATR. 0283116, AUS. 0421893, BEL. 0705641, CAN. 0853440, CHL. 0023084, CLB. 0017528, DNK. 0117047, FRA. 1543079, GRB. 1180659, ITL. 0827782, MEX. 0100320, NOR. 0124530, PRU. 0009336, SAF. 0676414, SPN. 0346430, STZ. 0471736, URG. 0009729, USR. 0321984, VZL. 0023676.
3,500,694.—BELT TRACKING SYSTEM — SEE D3286 FOR RE27313. MAR. 17, 1970.
3,592,071.—BELT TRACKING APPARATUS. JULY 13, 1971. ARG. 0179666, BEL. 0751117, CAN. 0925118, FRA. 7019040, GRB. 1298926, ITL. 0893540, JAP. 0770135, MEX. 0118981, SPN. 0380136.
3,593,838.—CONVEYOR BELT. JULY 20, 1971. CAN. 0883720.

Class 20A 2

3,498,148.—CHAIN TRAIN. MAR. 3, 1970.
3,509,780.—DOUBLE-ACTION ROTARY SOLENOID DRIVE MECHANISM. MAY 5, 1970.
3,844,179.—GEAR DRIVE FOR ELECTROPHOTOGRAPHIC PRINTING MACHINE. OCT. 29, 1974. ARG. 203483, BEL. 0816382, CAN. 1007075, GRB. 1467714, STZ. 5786990, VZL. 0033061.
3,982,831.—ELECTROSTATOGRAPHIC REPRODUCTION APP & DRIVE THEREFOR. SEPT. 28, 1976.
3,985,277.—WEB HANDLING DEVICE. OCT. 12, 1976.
4,110,028.—DRIVE SYSTEM FOR MULTI-MODE REPRODUCING APPARATUS. AUG. 29, 1978. BEL. 844828.

Class 20A 3

3,405,564.—PULLEY. OCT. 15, 1968. CAN. 0850353.
3,505,716.—ROLL APPARATUS. APR. 14, 1970.
3,791,243.—METHOD AND APPARATUS FOR FORMING EDGES OF AN ENDLESS BELT. FEB. 12, 1974.
3,932,177.—COLLAR AND METHOD OF MAKING SAME. JAN. 13, 1976.

Class 20A 4

3,329,029.—OFF-CENTER LOAD MOVING ASSEMBLY. JULY 4, 1967.
3,337,072.—LOADER. AUG. 22, 1967. CAN. 0825092, GRB. 1166619, JAP. 0605648.
3,493,269.—LOADING HEAD. FEB. 3, 1970. CAN. 0864392.
3,777,578.—LINEAR ACTUATOR. DEC. 11, 1973. CAN. 9783901.

Class 20A 5

3,213,645.—TORQUE LIMITING MECHANISM. OCT. 26, 1965. CAN. 0729978, GRB. 1035547, JAP. 0548690.
3,623,680.—CLUTCH/BRAKE MECHANISM. NOV. 30, 1971.
3,686,974.—MECHANICAL DRIVE ARRANGEMENT. AUG. 29, 1972.

Class 20A 6

3,351,831.—MOTOR SPEED CONTROL UTILIZING LIGHT SENSITIVE CONDUCTIVE AND RESISTIVE ELEMENTS. NOV. 7, 1967.
3,388,875.—WEB TRANSPORT CONTROL ASSEMBLY. JUNE 18, 1968.
3,418,046.—SIGNAL STORAGE DEVICE. DEC. 24, 1968. CAN. 0852814, GER. 1524999, GRB. 1190084, JAP. 0589515.
3,552,221.—SPEED CONVERTING MECHANISM. JAN. 5, 1971.
3,858,777.—PRINTING APPARATUS INCLUDING REGISTRATION CONTROL. JAN. 7, 1975.
3,870,934.—WEB TENSION CONTROLLER. MAR. 11, 1975.
3,909,125.—STEPPER MOTOR CONTROL. SEPT. 30, 1975.
3,917,400.—METHOD & APPARATUS FOR MAINTAINING A PREDETERMINED PHASE RELATIONSHIP BETWEEN TWO SIGNALS. NOV. 4, 1975.
3,921,043.—METHOD & APPARATUS FOR MAINTAINING SUBSTANTIALLY CONSTANT TORQUE IN A WEB TRANSPORT APPARATUS. NOV. 18, 1975.
3,944,896.—PHASE SYNCHRONIZATION SYSTEM WITH START-UP SEQUENCING AND AUTOMATIC SHUTDOWN. MAR. 16, 1976.
3,991,355.—STEPPER MOTOR CONTROL NOV. 9, 1976.
4,110,028.—DRIVE SYSTEM FOR MULTIMODE REPRODUCING APPARATUS. AUG. 29, 1978. BEL. 844828.

Class 20B

3,869,896.—ROLLING PROCESS. MAR. 11, 1975. GRB. 1434131.
3,942,349.—CROWN DIE FOR THREAD ROLLING OF APPLICATOR ROLLS. MAR. 9, 1976.
3,965,861.—SEPARATED ROLLER LIQUID DEVELOPMENT. JUNE 29, 1976.
4,040,827.—DEVELOPMENT IMAGING METHODS. AUG. 9, 1977.

Class 20B 2

3,356,248.—CONTAINER WITH A ROTATABLE CLOSURE. DEC. 5, 1967. CAN. 0825091, GRB. 1166618.
3,477,568.—ELECTROSTATIC SEPARATION OF ROUND AND NONROUND PARTICLES. NOV. 11, 1969.
3,478,600.—PARTICLE SIZE AND DISTRIBUTION ANALYZING APPARATUS. NOV. 18, 1969. CAN. 0871819, GRB. 1196449, JAP. 0667702.
3,694,068.—ROLLER RETRACTION MECHANISM IN A MULTIPLE ROLLER BELT ASSEMBLY. SEPT. 26, 1972. CAN. 0946322, GRB. 1370798.
3,698,540.—WEB SENSING MECHANISM FOR TRACKING SYSTEM. OCT. 17, 1972. CAN. 0946926.
3,702,131.—BELT TRACKING SYSTEM. NOV. 7, 1972. ARG. 1949380, AUS. 0459379, BEL. 0777321, CAN. 0953673, FRA. 7147892, GRB. 1381720, ITL. 0944435, MEX. 0126336, PNM. 0002633, SPN. 0398380.
3,740,288.—METHOD OF PREPARING A TONER DISPENSER. JUNE 19, 1973.
3,840,879.—EXCESS TONER SHIELD FOR ELECTROGRAPHIC APPARATUS. OCT. 8, 1974.
3,931,792.—ABRASIVE LIQUID DEVELOPING APPARATUS. JAN. 13, 1976.

Class 20B 3

3,410,060.—XEROGRAPHIC FILTER APPARATUS. NOV. 12, 1968. CAN. 0810976, FRA. 1458648, GRB. 1114505, ITL. 0729638, JAP. 0724232.
3,570,224.—FILTER FOR ELECTROSTATOGRAPHIC DEVELOPER. MAR. 16, 1971.
3,662,884.—METHOD AND APPARATUS FOR ELECTROSTATICALLY CLASSIFYING TONER PARTICLES. MAY 16, 1972. CAN. 0956273, GRB. 1327942.
3,740,735.—AIR CIRCULATION APPARATUS. JUNE 19, 1973. CAN. 1014265, GRB. 1322612, JAP. 0840915.
3,909,383.—CLEANING PROCESS. SEPT. 30, 1975. CAN. 0905883.
3,544,458.—METHOD OF FILTERING. DEC. 1, 1970. BEL. 732578, CAN. 888335.

Class 20 C

3,698,540.—WEB SENSING MECHANISM FOR TRACKING SYSTEM. OCT. 17, 1972. CAN. 0946926.

Class 20C 1

3,498,500.—LEVEL SENSOR. MAR. 3, 1970. CAN. 0912851, GRB. 1251128, JAP. 0663856.
3,520,445.—DIELECTRIC LEVEL SENSOR. JULY 14, 1970. CAN. 0895527, GRB. 1239856, JAP. 0663857.

Class 20C 2

3,357,249.—TEMPERATURE SENSOR. DEC. 12, 1967. CAN. 0810332, GER. 1690654, GRB. 1171381.
3,723,980.—TEMPERATURE COMPENSATION SYSTEM FOR MAGNETIC DISK MEMORY UNIT. MAR. 27, 1973. ARG. 0195985, AUS. 0471633, BEL. 0791363, FRA. 7240560, GRB. 1408778, ITL. 0970913, MEX. 0129694, SPN. 0408629, STZ. 0028456, SWD. 7214693, VZL. 0032424.

Class 20C 3

3,492,732.—WEB QUANTITY INDICATOR. FEB. 3, 1970. CAN. 0887178.

Class 20C 4

3,191,440.—PRESSURE GAUGE INSTRUMENT. JUNE 29, 1965.
3,249,760.—PRESSURE GAUGE INSTRUMENT. MAY 3, 1966.
3,907,421.—TRANSFER APPARATUS FOR ELECTROSTATIC REPRODUCING MACHINES. SEPT. 23, 1975.
4,138,635.—ALTERNATING CURRENT GENERATOR USING LIGHT DEPENDENT RESISTOR. FEB. 6, 1979.

Class 20C 5

3,216,247.—WIND-MEASURING METER DEVICE. NOV. 9, 1965.

Class 20C 6

3,502,163.—EQUAL ARM BALANCE WITH C-SHAPED FULCRUM SLEEVE FORMED ON BEAM. MAR. 24, 1970.
3,583,505.—SPRING SCALE. JUNE 8, 1971. CAN. 0902123, GRB. 1295477.
3,878,358.—DIGITAL POWER CONTROL. APR. 15, 1975.

Class 20C 7

3,396,965.—SENSOR GAUGE. AUG. 13, 1968. CAN. 0822218, GRB. 1152538, JAP. 0587326.

Class 20D

3,746,502.—EVAPORATION CRUCIBLE. JULY 17, 1973. GRB. 1411236.
3,765,638.—SUCTION MOUNT. OCT. 16, 1973.
3,765,757.—TRANSPORT ARRANGEMENT FOR THIN SHEET MATERIAL. OCT. 16, 1973. BEL. 0793551, CAN. 1004289, GRB. 1419978, ITL. 0972846, SPN. 0410107.

Class 20D 1

3,379,855.—FLUID FEED SYSTEM. APR. 23, 1968.
3,407,018.—TWO-AXIS ANGULAR POSITIONING APPARATUS FOR ADJUSTING THE POSITION OF AN OPTICAL ELEMENT. OCT. 22, 1968.
3,436,071.—WORK HOLDER. APR. 1, 1969. CAN. 0856095, GRB. 1174795, JAP. 0642773.
3,440,859.—CORNER FORMING APPARATUS. APR. 29, 1969. CAN. 0866532.
3,475,936.—TRANSPORT SYSTEM. NOV. 4, 1969. GRB. 1179749.
3,867,027.—TRANSPORT ARRANGEMENT FOR THIN SHEET MATERIAL. FEB. 18, 1975. BEL. 0793551, CAN. 1004289, GRB. 1419978, ITL. 0972846, SPN. 0410107.
3,869,896.—ROLLING PROCESS. MAR. 11, 1975. GRB. 1434131.
3,901,647.—LOW RADIATION OPEN-BOAT CRUCIBLES. AUG. 26, 1975.
4,016,470.—TRANSDUCER BORING SYSTEM. APR. 5, 1977.
4,018,414.—HOLDING FIXTURES. APR. 19, 1977.
4,143,960.—RETRACTABLE SUPPORT MEMBER. MAR. 13, 1979.

Class 20D 2

3,341,681.—XEROGRAPHIC PLATE FABRICATION. SEPT. 12, 1967. CAN. 0780598, FRA. 1415795, GRB. 1070555, HOL. 0144068, IND. 0094992, ITL. 0738063.
3,876,317.—LATCH MECHANISM. APR. 8, 1975. CAN. 1005486.

Class 20D 3

3,258,281.—HERMETIC SEALED COUPLING FOR CONDUITS. JUNE 28, 1966.
3,317,224.—FLANGED PIPE COUPLING HAVING METALLIC SEAL MEANS. MAY 2, 1967.
3,366,343.—DEVICE FOR FASTENING A SHAFT TO A REEL. JAN. 30, 1968.
3,604,737.—METHOD OF JOINING MATERIALS. SEPT. 14, 1971.

Class 20D 4

3,532,863.—DYNAMIC CAM TESTER. OCT. 6, 1970. CAN. 0835529.
3,843,233.—ALIGNING AGENT FOR LOWRNG THRSHLD VOLTG REQUIRD TO EFFECT OPTCLY NEQTV TO OPTCLY POSITIVE PHASE. OCT. 22, 1974.

Class 20D 5

3,596,316.—BLOW MOLDING APPARATUS. AUG. 3, 1971.

Class 20D 6

3,384,107.—BAKEABLE VACUUM VALVE. MAY 21, 1968.

Class 20D 7

3,489,463.—BRUSH SIZING APPARATUS. JAN. 13, 1970. GRB. 1243233, JAP. 0810578.

Class 20E

3,217,328.—ANTENNA WITH WIRE MESH REFLECTOR COLLAPSING IN A PINWHEEL MANNER. NOV. 9, 1965.

Class 20F

3,390,693.—PURE FLUID AMPLIFIER. JULY 2, 1968.
3,413,993.—FLUID DEVICE. DEC. 3, 1968.
3,417,770.—FLUID AMPLIFIER SYSTEM. DEC. 24, 1968.
3,459,205.—MAGNETICALLY CONTROLLED FLUID AMPLIFIER. AUG. 5, 1969.
3,496,955.—ELECTRICALLY ACTUATED BISTABLE FLUID AMPLIFIER. FEB. 24, 1970.
3,726,588.—WEB TRACKING SYSTEM. APR. 10, 1973.

Class 20 G

3,217,328.—ANTENNA WITH WIRE MESH REFLECTOR COLLAPSING IN A PINWHEEL MANNER. NOV. 9, 1965.
3,549,059.—TRIGGERING APPARATUS AND WORK LOCATING MEANS FOR AEROSOL SPRAY CANS. DEC. 22, 1970.
3,555,725.—SELF-TRAVELLING WHEEL. JAN. 19, 1971. CAN. 0900718, GRB. 1289331, JAP. 0713807.
3,688,415.—VIBRATION DEMONSTRATION. SEPT. 5, 1972.
3,747,589.—REACTION TIME TESTING APPARATUS. JULY 24, 1973.
3,818,391.—TRACKING ASSEMBLY FOR AN ENDLESS BELT ELECTROSTATOGRAPHIC MACHINE. JUNE 18, 1974. CAN. 1010107.
3,840,879.—EXCESS TONER SHIELD FOR ELECTROGRAPHIC APPARATUS. OCT. 8, 1974.
3,907,421.—TRANSFER APPARATUS FOR ELECTROSTATIC REPRODUCING MACHINES. SEPT. 23, 1975.
3,941,006.—FREE FLOATING BELT TENSIONER. MAR. 2, 1976.
3,946,920.—VACUUM SYSTEM CONTROL. MAR. 30, 1976.
3,982,753.—COMBINED BACKSTOP & BRAKE-COMBINED BACKSTOP & BRAKE FOR ALBERT. SEPT. 28, 1976. BEL. 0812180, CAN. 1004161, FRA. 7407806, GRB. 1443088.
3,994,053.—DRUM SUPPORT APPARATUS. NOV. 30, 1976.
4,040,157.—DRUM SUPPORT APPARATUS. AUG. 9, 1977.
4,040,678.—BEARING ASSEMBLY. AUG. 9, 1977.
4,105,345.—EXPANDABLE PHOTORECEPTOR ENDBELLS. AUG. 8, 1978.
4,120,576.—DRUM SUPPORT APPARATUS. OCT. 17, 1978.
4,135,805.—COUNTERBALANCING APPARATUS. JAN. 23, 1979.
4,143,960.—RETRACTABLE SUPPORT MEMBER. MAR. 13, 1979.

Class 21

D.240,557.—TRAY RACK. JULY 13, 1976.
3,942,349.—CROWN DIE FOR THREAD ROLLING OF APPLICATOR ROLLS. MAR. 9, 1976.
D245,667.—WIRE CUTTER. SEPT. 6, 1977.

Class 21A

3,905,400.—ELECTROFORMING MANDREL. SEPT. 16, 1975.
4,067,782.—METHOD OF FORMING AN ELECTROFORMING MANDREL. JAN. 10, 1978.

Class 21A 1

3,316,158.—FOAM METAL CONSTRUCTION AND A METHOD FOR MAKING IT. APR. 25, 1967.
3,378,469.—ELECTROFORMING TECHNIQUE AND STRUCTURE FOR REFLECTING MIRRORS. APR. 16, 1968.
3,428,533.—HIGH QUALITY SUB-MASTERS AND METHOD FOR PRODUCING THEM. FEB. 18, 1969.
3,472,679.—COATING SURFACES. OCT. 14, 1969. CAN. 0896992.
3,505,177.—ELECTROFORMING PROCESS. APR. 7, 1970.
3,520,780.—MAGNESIUM ELECTRODEPOSITION. JULY 14, 1970.
3,844,906.—DYNAMIC BATH CONTROL PROCESS. OCT. 29, 1974. BEL. 0799236, FRA. 7316539, GRB. 1421818.
3,853,614.—CYCLIC RECORDING SYSTEM BY THE USE OF AN ELASTOMER IN AN ELECTRIC FIELD. DEC. 10, 1974. ARG. 0196734, AUS. 0461213, BEL. 0777320, CAN. 0953990, FRA. 7147891, GRB. 1380057, ITL. 0944392, MEX. 0131400, SPN. 0398306.
3,876,510.—PROCESS FOR ELECTROFORMING A FLEXIBLE BELT. APR. 8, 1975.
3,905,685.—ZOOM LENS FOR FIXED CONJUGATES. SEPT. 16, 1975. CAN. 0995039, GRB. 1451781.
3,954,568.—ELECTROFORMING AN ENDLESS FLEXIBLE SEAMLESS XEROGRAPHIC BELT. MAY 4, 1976. ARG. 0185811, AUS. 0449005, BEL. 0762249. CAN. 0889781, EGR. 0094306, FRA. 7103844, GRB. 1288717, HUN. 0169866, ITL. 0918048, MEX. 0119465, PLD. 0081712, PNM. 0002384, SPN. 0387636, STZ. 0521612, SWD. 0360753, TIW. 0007843, VZL. 0027666.
3,959,109.—METHOD AND APPARATUS FOR ELECTROFORMING. MAY 25, 1976.
3,963,587.—PROCESS FOR ELECTROFORMING NICKEL FOILS. JUNE 15, 1976.
4,043,876.—METHOD AND APPARATUS FOR ELECTROFORMING. AUG. 23, 1977.

Class 21A 2

3,316,158.—FOAM METAL CONSTRUCTION AND A METHOD FOR MAKING IT. APR. 25, 1967.
3,378,469.—ELECTROFORMING TECHNIQUE AND STRUCTURE FOR REFLECTING MIRRORS. APR. 16, 1968.
3,428,533.—HIGH QUALITY SUB-MASTERS AND METHOD FOR PRODUCING THEM. FEB. 18, 1969.
3,577,323.—HIGH QUALITY SUBMASTERS. MAY 4, 1971.
3,927,463.—METHOD OF MAKING A CYLINDRICALLY SHAPED, HOLLOW ELECTROFORMING MANDREL. DEC. 23, 1975.
3,950,839.—ELECTROFORMING MANDREL. APR. 20, 1976.

Class 21A 3

3,352,482.—ION SPUTTER PUMPING COLLECTOR. NOV. 14, 1967.
3,437,568.—APPARATUS AND METHOD FOR DETERMINING AND CONTROLLING STRESS IN AN ELECTROFORMED PART. APR. 8, 1969.
3,799,859.—ELECTROFORMING SYSTEM. MAR. 26, 1974. GRB. 1427544.
4,043,876.—METHOD AND APPARATUS FOR ELECTROFORMING. AUG. 23, 1977.

Class 21B

3,223,878.—METHOD OF FABRICATING FINE GRIDS. DEC. 14, 1965.
3,276,919.—PROCESS FOR FORMING METAL STRUCTURES HAVING VERY FINE PORES. OCT. 4, 1966.
3,360,347.—PRODUCTION OF POUROUS MATERIALS. DEC. 26, 1967.
3,494,748.—OXIDATION RESISTANT COATING AND ARTICLE. FEB. 10, 1970.
3,666,429.—MATALLIZED AND BRAZED CERAMICS. MAY 30, 1972.
3,703,306.—METHOD OF HERMETICALLY SEALING SILICON TO A LOW EXPANSION ALLOY. NOV. 21, 1972.
3,740,830.—BRAZING CERAMICS. JUNE 26, 1973.
3,825,724.—WRAP ADJUST DEVICE FOR CONTROLLING ENGAGEMENT BETWEEN A WEB AND ROLLER. JULY 23, 1974. CAN. 0995295, GRB. 1406047.
3,851,985.—COLLAR AND METHOD OF MAKING SAME. DEC. 3, 1974.
3,885,923.—GENERATION OF CURVED SURFACES ON A WORKPIECE. MAY 27, 1975.
3,911,163.—SOLDER COATING PROCESS AND APPARATUS. OCT. 7, 1975.
4,083,323.—PNEUMATIC SYSTEM FOR SOLDER LEVELING APPARATUS. APR. 11, 1978.
4,114,431.—METHOD OF FORMING TUBULAR METAL PRODUCTS. SEPT. 19, 1978.
4,223,088.—METHOD OF FORMING DEFINED CONDUCTIVE PATTERNS IN A THIN GOLD FILM. SEPT. 16, 1980.
4,264,646.—SELECTIVELY ELECTROLESSLY DEPOSITING A METAL PATTERN ON THE SURFACE OF A LAMINAR FILM. APR. 28, 1981.

Class 21C

3,653,885.—PROCESS OF STABILIZING A MIGRATION IMAGE COMPRISING SELENIUM PARTICLES. APR. 4, 1972. CAN. 0937437.
4,112,841.—RESILIENT LITHOGRAPHIC MASTERS FOR DIRECT PRINTING. SEPT. 12, 1978.

4,114,535.—RESILIENT LITHOGRAPHIC MASTERS FOR DIRECT PRINTING. SEPT. 19, 1978.
4,123,283.—SETTING ELECTRICAL LATENT IMAGES IN MIGRATION IMAGING ELEMENTS. OCT. 31, 1978. AUS. 482769. BEL. 813501. CAN. 1037546. FRA. 7412476. GRB. 1471385. ITL. 1009714. MEX. 136227.
4,135,926.—MIGRATION IMAGING PROCESS IN WHICH LATENT IMAGE IS SET. JAN. 23, 1979. AUS. 482769. BEL. 813501. CAN. 1037546. FRA. 7412476. GRB. 1471385. ITL. 1009714. MEX. 136227.
4,202,932.—MAGNETIC RECORDING MEDIUM. MAY 13, 1980.
4,269,137.—PRETREATMENT OF SUBSTRATES PRIOR TO THIN FILM DEPOSITION. MAY 26, 1981.

Class 22

D244,280.—SORTER WITH BIN INDICATOR. MAY 10, 1977.
D247,243.—SORTER CONTROLLER. FEB. 14, 1978.
D.252,275.—SUBSTRATE CLAMP FOR A SLITTING APPARATUS. JULY 3, 1979.

Class 22A

3,473,388.—ISOKINETIC PARTICLE SAMPLER. OCT. 21, 1969. CAN. 0852475, GRB. 1194569.
3,478,600.—PARTICLE SIZE AND DISTRIBUTION ANALYZING APPARATUS. NOV. 18, 1969. CAN. 0871819, GRB. 1196449, JAP. 0667702.
3,544,458.—METHOD OF FILTERING. DEC. 1, 1970. CAN. 0888335.
3,940,997.—APPARATUS AND METHOD FOR MEASURING ANGLE OF REPOSE. MAR. 2, 1976.

Class 22B

3,938,993.—XEROGRAPHIC METHOD FOR MAKING A RESPONSIVE ANSWER SYSTEM. FEB. 17, 1976. CAN. 0858780, GRB. 1235941, JAP. 0688426.
3,972,715.—PARTICLE ORIENTATION IMAGING SYSTEM. AUG. 3, 1976.

Class 22B 1

3,497,320.—AUTOMATED CHEMICAL ANALYZER - FLEXIBLE POD SYSTEM. FEB. 24, 1970. ARG. 0182336, ATR. 0308052, AUS. 0419707, BEL. 0722723, CAN. 0917546, FIN. 0050909, FRA. 1578476, GER. 1673342, GRB. 1218748, IND. 0113632, ITL. 0856573, LXB. 0057970, MEX. 0112299, NOR. 0131258, NZL. 0164681, PNM. 0001771, SAF. 0069935, SPN. 0348326, STZ. 0516798, SWD. 0345909, VZL. 0025948.
3,504,376.—AUTOMATED CHEMICAL ANALYZER. MAR. 31, 1970. ARG. 0177588, ATR. 0300733, AUS. 0441839, BEL. 0722721, CAN. 0921812, FIN. 0050908, FRA. 1584398, GRB. 1218750, IND. 0113631, ITL. 0856574, LXB. 0057969, MEX. 0112300, NOR. 0131259, NZL. 0155344, PNM. 0001667, SAF. 0690934, SPN. 0362595, STZ. 0526109, SWD. 0365310, VZL. 0027510.
3,508,879.—ALIQUOTTING DEVICE. APR. 28, 1970. ATR. 0280666, AUS. 0429344, BEL. 0722722, CAN. 0883952, FRA. 1578475, GER. 1673343, GRB. 1218747, ITL. 0862567, LXB. 0057971, MEX. 0101480, NOR. 0131257, NZL. 0155346, SAF. 0069936, SPN. 0363624, STZ. 0494403, SWD. 0342699.
3,526,480.—AUTOMATED CHEMICAL ANALYZER. SEPT. 1, 1970. ARG. 0174584, AUS. 0452281, BEL. 0728248, CAN. 0950341, FRA. 1584397, GER. 1673340, GRB. 1218749, HOL. 1467250, ITL. 0865002, MEX. 0118203, PNM. 0001668, SPN. 0381340, STZ. 0501922, SWD. 0359925, VZL. 0025782.
3,582,283.—CHEMICAL PACKAGE. JUNE 1, 1971.

Class 22B 1A

3,477,821.—CHEMICAL PACKAGE. NOV. 11, 1969. ARG. 0169582, AUS. 0433117, BEL. 0725955, CAN. 0876261, FRA. 1596338, GER. 1816225, GRB. 1245780, HOL. 0141402, ITL. 0852626, JAP. 0805178, MEX. 0108467. PNM. 0001764, SPN. 0361841, STZ. 0531895, SWD. 0345742, VZL. 0023719.
3,477,822.—CHEMICAL PACKAGE. NOV. 11, 1969. ARG. 0169541, AUS. 0433116, BEL. 0725958, CAN. 0904725, FRA. 1596340, GRB. 1251680, HOL. 0141098, ITL. 0852625, JAP. 0802751, MEX. 0108998, PNM. 0001662, SPN. 0361844, STZ. 0530223, SWD. 0346384, VZL. 0023725.
3,480,398.—CHEMICAL PACKAGE. NOV. 25, 1969. ARG. 0169487, AUS. 0433114, BEL. 0725956, CAN. 0885006, FRA. 1596337, GER. 1816228, GRB. 1257336, HOL. 0141797, ITL. 0856875, JAP. 0805177, MEX. 0108468, PNM. 0001663, SPN. 0361842, STZ. 0530637, SWD. 0345012, VZL. 0023722.
3,480,399.—CHEMICAL PACKAGE. NOV. 25, 1969. ARG. 0169540, AUS. 0433115, BEL. 0725957. CAN. 0906891, FRA. 1596339, GER. 1816227, GRB. 1251679, HOL. 0141099, ITL. 0852624, JAP. 0802750. MEX. 0108997, PNM. 0001669, SPN. 0361843, STZ. 0526106, VZL. 0023720.
3,497,320.—AUTOMATED CHEMICAL ANALYZER - FLEXIBLE POD SYSTEM. FEB. 24, 1970. ARG. 0182336, ATR. 0308052, AUS. 0419707, BEL. 0722723, CAN. 0917546, FIN. 0050909, FRA. 1578476, GER. 1673342, GRB. 1218748, IND. 0113632, ITL. 0856573, LXB. 0057970, MEX. 0112299, NOR. 0131258, NZL. 0164681, PNM. 0001771, SAF. 0069935, SPN. 0348326, STZ. 0516798, SWD. 0345909, VZL. 0025948.
3,504,376.—AUTOMATED CHEMICAL ANALYZER. MAR. 31, 1970. ARG. 0177588, ATR. 0300733, AUS. 0441839, BEL. 0722721, CAN. 0921812, FIN. 0050908, FRA. 1584398, GRB. 1218750, IND. 0113631, ITL. 0856574, LXB. 0057969, MEX. 0112300, NOR. 0131259, NZL. 0155344, PNM. 0001667, SAF. 0690934, SPN. 0362595, STZ. 0526109, SWD. 0365310, VZL. 0027510.
3,545,934.—CHEMICAL PACKAGE. DEC. 8, 1970. BEL. 0739751, CAN. 0887759. FRA. 6933737, GER. 1950067, GRB. 1257337, HOL. 150690, ITL. 0873750.
3,545,935.—DISPOSABLE REACTION CONTAINER FOR AN AUTOMATIC CHEMICAL ANALYZER. DEC. 8, 1970. ARG. 0179456, AUS. 0447958, BEL. 0741890, CAN. 0933494, FRA. 6939709, GER. 1957735, GRB. 1257338, HOL. 0145773, ITL. 0878322, MEX. 0113681, SPN. 0373794, STZ. 0500010, SWD. 0353399.
3,554,705.—CHEMICAL PACKAGE. JAN. 12, 1971.
3,582,283.—CHEMICAL PACKAGE. JUNE 1, 1971.
3,582,285.—CHEMICAL PACKAGE. JUNE 1, 1971.

Class 22B 1B

3,497,320.—AUTOMATED CHEMICAL ANALYZER - FLEXIBLE POD SYSTEM. FEB. 24, 1970. ARG. 0182336, ATR. 0308052, AUS. 0419707, BEL. 0722723, CAN. 0917546, FIN. 0050909, FRA. 1578476, GER. 1673342, GRB. 1218748, IND. 0113632, ITL. 0856573, LXB. 0057970, MEX. 0112299, NOR. 0131258, NZL. 0164681, PNM. 0001771, SAF. 0069935, SPN. 0348326, STZ. 0516798, SWD. 0345909, VZL. 0025948.
3,508,879.—ALIQUOTTING DEVICE. APR. 28, 1970. ATR. 0280666, AUS. 0429344, BEL. 0722722, CAN. 0883952, FRA. 1578475, GER. 1673343, GRB. 1218747, ITL. 0862567, LXB. 0057971, MEX. 0101480, NOR. 0131257, NZL. 0155346, SAF. 0069936, SPN. 0363624, STZ. 0494403, SWD. 0342699.
3,526,480.—AUTOMATED CHEMICAL ANALYZER. SEPT. 1, 1970. ARG. 0174584, AUS. 0452281, BEL. 0728248, CAN. 0950341, FRA. 1584397, GER. 1673340, ORB. 1218749, HOL. 1467250, ITL. 0865002, MEX. 0118203, PNM. 0001668, SPN. 0381340, STZ. 0501922, SWD. 0359925, VZL. 0025782.
3,586,446.—FLAME PHOTOMETER. JUNE 22, 1971. ARG. 0183956, BEL. 0720577, CAN. 0876239, FRA. 1581844, GER. 1798234, GRB. 1246633, ITL. 0864506, JAP. 0835088, MEX. 0103300, SWD. 0342326, VZL. 0023659.

Class 22B 2

3,497,320.—AUTOMATED CHEMICAL ANALYZER - FLEXIBLE POD SYSTEM. FEB. 24, 1970. ARG. 0182336. ATR. 0308052, AUS. 0419707, BEL. 0722723, CAN. 0917546, FIN. 0050909, FRA. 1578476, GER. 1673342, GRB. 1218748, IND. 0113632, ITL. 0856573, LXB. 0057970, MEX. 0112299, NOR. 0131258, NZL. 0164681, PNM. 0001771, SAF. 0069935, SPN. 0348326, STZ. 0516798, SWD. 0345909, VZL. 0025948.
3,504,376.—AUTOMATED CHEMICAL ANALYZER. MAR. 31, 1970. ARG. 0177588, ATR. 0300733, AUS. 0441839, BEL. 0722721, CAN. 0921812, FIN. 0050908, FRA. 1584398, GRB. 1218750, IND. 0113631, ITL. 0856574, LXB. 0057969, MEX. 0112300, NOR. 0131259, NZL. 0155344, PNM. 0001667, SAF. 0690934, SPN. 0362595, STZ. 0526109, SWD. 0365310, VZL. 0027510.
3,520,659.—METHOD AND APPARATUS FOR USE IN DETERMINING PROTHROMBIN TIME OF A BLOOD SAMPLE. JULY 14, 1970. ARG. 0176972, AUS. 0421560, BEL. 0722360, CAN. 0892696, FRA. 1588701, GER. 1804292, GRB. 1244355, HOL. 0142783, ITL. 0862597, MEX. 0105611, SPN. 0359312, SWD. 0345744, VZL. 0023706.
3,705,013.—ANALYTICAL PROCEDURES AND COMPOSITIONS THEREFOR. DEC. 5, 1972.

Class 24

D.249,695.—REMOVABLE UNDERSIZE SHEET EDGE GUIDE SHEET FEED CASSETTE. SEPT. 26, 1978.
3,888,892.—LIQUID CRYSTALLINE COMPOUNDS. JUNE 10, 1975.
4,126,711.—CHARGE PATTERN DEVELOPMENT METHOD & APPARATUS. NOV. 21, 1978. GRB. 1484712.

Class 24A 1

3,289,211.—ELECTRICAL RECORDING PEN. NOV. 29, 1966. ARG. 0144972, AUS. 0283737, BEL. 0663614, CAN. 0755964. FRA. 1444045, GER. 1498264, GRB. 1064344, HOL. 0145955, ITL. 0760432, JAP. 0704598, MEX. 0084384, NOR. 0121120, NZL. 0141445, SPN. 0312594, STZ. 0430241, SWD. 0336857, VZL. 0017268.
3,308,475.—ELECTROVISCOUSLY CONTROLLED RECORDER. MAR. 7, 1967.
3,359,566.—MOTOR ACTION CAPILLARY. DEC. 19, 1967. CAN. 0831673, GER. 1537562, GRB. 1196932, JAP. 0583415.
3,375,528.—RECORDING PEN HAVING A PLURALITY OF CLOSELY SPACED WIRES. MAR. 26, 1968. AUS. 0284067, BEL. 0680693, CAN. 0834975, FRA. 0089948, GER. 1548876, GRB. 1148771, HOL. 0150907, ITL. 0809504, JAP. 0773176, MEX. 0091261, SPN. 0326324, STZ. 0457888, SWD. 0325719.
3,484,162.—ELECTROVISCOUS RECORDING. DEC. 16, 1969.
3,512,173.—ALPHANUMERIC INK DROPLET RECORDER. MAY 12, 1970. ARG. 0180676, BEL. 0725960, CAN. 0879917, FRA. 1603645, GER. 1816194, GRB. 1227600, ITL. 0849703, JAP. 0770832, MEX. 0109982.
3,512,177.—INK RECORDING SYSTEM. MAY 12, 1970.
3,848,258.—MULTI-JET INK PRINTER. NOV. 12, 1974. BEL. 0819105, CAN. 1000778, FRA. 7419592.
3,893,131.—INK PRINTER. JULY 1, 1975. BEL. 0819105, CAN. 1000778, FRA. 7419592.
4,014,693.—ELECTROVISCOUS RECORDING. MAR. 29, 1977.
4,220958.—INK JET ELECTROHYDRODYNAMIC EXCITER. SEPT. 2, 1980.
4,222,059.—AN INK JET MULTIPLE FIELD ELECTROSTATIC LENS. SEPT. 9, 1980.
4,224,523.—ELECTROSTATIC LENS FOR INK JETS. SEPT. 23, 1980.
4,238,804.—STITCHING METHOD AND APPARATUS FOR MULTIPLE NOZZLE INK JET PRINTERS. DEC. 9, 1980.
4,255,754.—DIFFERENTIAL FIBER OPTIC SENSING METHOD AND APPARATUS FOR INK JET RECORDERS. MAR. 10, 1981.
4,274,100.—ELECTROSTATIC SCANNING INK JET SYSTEM. JUNE 16, 1981.

Class 24A 2

3,329,964.—FACSIMILE RECORDING APPARATUS. JULY 4, 1967. CAN. 0809338, GRB. 1095098.
3,334,354.—DOTTING INK RECORDER. AUG. 1, 1967. CAN. 0792422.
3,627,908.—HIGH-SPEED COLOR CORRECTING SCANNER FOR MAKING COLOR PRINTING PLATES. DEC. 14, 1971. CAN. 0923428, GRB. 1335980, JAP. 0774708.
4,024,544.—MENISCUS DAMPENING DROP GENERATOR. MAY 17, 1977.
4,032,929.—HIGH DENSITY LINEAR ARRAY INK JET ASSSEMBLY. JUNE 28, 1977.
4,057,807.—SEPARABLE LIQUID DROPLET INSTRUMENT AND MAGNETIC DRIVER THEREFOR. NOV. 8, 1977.
4,104,645.—COINCIDENCE INK JET. AUG. 1, 1978. SAF. 6469.
4,112,433.—MENISCUS DAMPENING DROP GENERATOR. SEPT. 5, 1978. STZ. 609915.
4,115,789.—SEPARABLE LIQUID DROPLET INSTRUMENT AND PIEZOELECTRIC DRIVERS THEREFOR. SEPT 19, 1978. BEL. 850334.
4,121,227.—INK JET ARRAY WITH ISOLATED FLUID RECTIFIER LAYERS. OCT. 17, 1978.
4,199,769.—COINCIDENCE GATE INK JET WITH INCREASED OPERATING PRESSURE WINDOW. APR. 22. 1980.
4,199,770.—COINCIDENCE GATE INK JET WITH INCREASED OPERATING PRESSURE WINDOW. APR. 22, 1980.
4,201,995.—COINCIDENCE GATE INK JET WITH INCREASED OPERATING PRESSURE WINDOW. MAY 6, 1980.
4,229,751.—INK JET HEAD. OCT. 21, 1980.
4,233,610.—HYDRODYNAMICALLY DAMPED PRESSURE PULSE DROPLET EJECTOR. NOV. 11, 1980.
4,243,995.—INCAPSULATED PIEZOELECTRIC PRESSURE PULSE DROP EJECTOR APPARATUS. JAN. 6, 1981.

Class 24A 3

3,287,734.—MAGNETIC INK RECORDING. NOV. 22, 1966. CAN. 0808834, FRA. 1490442, GRB. 1102505, HOL. 0150643, ITL. 0784569, JAP. 0571140.
3,334,000.—METHOD FOR SIMULTANEOUS PRODUCTION OF A PLURALITY OF MICROCIRCUIT WAFERS. AUG. 1, 1967.

Class 24A 4

3,480,962.—FACSIMILE RECORDING SYS. NOV. 25, 1969.
3,484,162.—ELECTROVISCOUS RECORDING. DEC. 16, 1969.
3,484,793.—IMAGE RECORDING APPARATUS INK DROPLET RECORDER WITH OPTICAL INPUT. DEC. 16, 1969.
3,553,708.—APPARATUS AND METHOD EMPLOYING PHOTOELECTROVISCOUS INK. JAN. 5, 1971.

Class 24B

3,951,658.—COLOR MODIFYING IMAGING METHOD AND ARTICLE. APR. 20, 1976.
4,080,054.—DEVICE FOR REPLENISHING TONER PARTICLES. MAR. 21, 1978.
4,096,294.—PROCESS FOR PREPARING WATERLESS PRINTING MASTERS COMPRISING COPOLYMER OF SILOXANE AND CRYST. JUNE 20, 1978.

Class 24B 1

3,833,293.—METHOD OF CREATING COLOR TRANSPARENCIES. SEPT. 3, 1974.
4,047,947.—PROCESS FOR THE PREPARATION OF TRANSPARENCIES BY SELECTIVE DECOMPOSITION OF AN ORGANOSELENI. SEPT. 13, 1978.
4,055,424.—NOVEL MICROFILM AND PROCESS FOR PREPARATION. OCT. 25, 1977.

Class 24B 1B 1

3,528,355.—CAMERA-PROCESSOR. SEPT. 15, 1970. ARG. 0184627, ATR. 0303513, AUS. 0426557, BEL. 0720022, BRA. 6800654, CAN. 0864811, CHL. 0024251, CLB. 0018453, FRA. 1586179, GER. 1797177, GRB. 1244641, IND. 0117458. ITL. 0839895, LXB. 0056774, MEX. 0103737, NOR. 0128296, NZL. 0153587, PLP. 0006313, PNM. 0001980, PRU. 0010212, PTG. 0050229, SPN. 0357651, STZ. 0516171, SWD. 0338503, URG. 0009309, VZL. 0023698.

Class 24B 1B 3

3,459,888.—SELECTIVE PHOTOCOPIER. AUG. 5, 1969.
3,537,788.—AUTOMATIC DISCRIMINATION TECHNIQUE FOR SELECTIVE PHOTOCOPYING. NOV. 3, 1970.

Class 24B 1C

3,393,362.—PROCESS FOR DETECTING IRREGULARITIES IN A METALLIC SURFACE. JULY 16, 1968.
3,480,965.—APPARATUS FOR PYROGENICALLY RECORDING ON TRANSPARENCIES. NOV. 25, 1969.

Class 24B 1D

3,435,243.—FILM FRAME DETECTION SYSTEM. MAR. 25, 1969.

Class 24B 2A

3,349,980.—VACUUM TRANSPORT DEVICE. OCT. 31, 1967.
3,388,875.—WEB TRANSPORT CONTROL ASSEMBLY. JUNE 18, 1968.

Class 24B 2B

3,409,364.—GATE ASSEMBLY. NOV. 5, 1968.
3,409,365.—CONTACT PRINTER. NOV. 5, 1968. AUS. 0425973, JAP. 0613746.

Class 24B 2C

3,379,110.—EXPOSURE CONTROL SYSTEM. APR. 23, 1968.

3,479,119.—EXPOSURE CONTROL APPARATUS. NOV. 18, 1969.

Class 24B 4

3,510,216.—PROJECTION APPARATUS. MAY 5, 1970.

Class 24C

4,007,682.—REVERSE ANGLE MOUNTED INK-SPLITTING DOCTOR BLADE. FEB. 15, 1977.

Class 24C 1

3,843,407.—BLADE CLEANING WITH REVERSE MOVEMENT. OCT. 22, 1974.

Class 24C 1A

3,170,395.—DUPLICATING. FEB. 23, 1965. AUS. 0410880, CAN. 0768079, FRA. 1414985, GRB. 1059659, ITL. 0740682, JAP. 0511405.
3,332,347.—DUPLICATING. JULY 25, 1967. AUS. 0271226, CAN. 0761868, FRA. 1367474, GER. 1471696, GRB. 1029997, ITL. 0730203.
3,357,353.—VAPOR THERMOGRAPHY RECORDING PROCESS AND RECORDING MEMBER USED THEREIN. DEC. 12, 1967.

Class 24C 1B

3,336,867.—DUPLICATING PROCESS. AUG. 22, 1967. CAN. 0796971, GRB. 1149056.

Class 24C 1C

3,487,775.—IMAGING SYSTEM. JAN. 6, 1970. CAN. 0873983.

Class 24C 1D

3,408,216.—IMAGE REPRODUCTION. OCT. 29, 1968. CAN. 0806942, GRB. 1127218, JAP. 0742511.
3,792,266.—THERMOGRAPHIC RECORDING USING VAPORIZED MATERIAL AND COLORED PARTICLE DEVELOPMENT. FEB. 12, 1974.

Class 24C 1E 1

3,402,660.—DRUM SUPPORT AND DRIVE SYSTEM FOR REPRODUCTION MACHINES. SEPT. 24, 1968.
3,427,965.—SHEET GRIPPER MEANS FOR REPRODUCTION MACHINE OF THE PRESSURE TRANSFER TYPE. FEB. 18, 1969.
3,429,259.—PRESSURE TRANSFER REPRODUCTION MACHINE. FEB. 25, 1969.
3,460,472.—TRANSFER SHEET CLAMPING MECHANISM FOR A REPRODUCTION MACHINE. AUG. 12, 1969.

Class 24C 1E 2

3,433,154.—PRESSURE PRODUCING MEANS FOR REPRODUCTION MACHINE. MAR. 18, 1969.

Class 24C 1E 3

3,374,732.—SELF-ALIGNING COPY DRUM STRIPOUT MECHANISM FOR REPRODUCTION MACH. MAR. 26, 1968.
3,375,780.—SHEET COUNTING MECHANISM FOR REPRODUCTION MACHINES. APR. 2, 1968.
3,380,379.—SHEET GUIDING MECHANISM FOR A REPRODUCTION MACHINE. APR. 30, 1968.
3,405,635.—PAPER SUPPORT TRAY FOR REPRODUCTION MACHINES. OCT. 15, 1968.
3,427,966.—PRESSURE TRANSFER TYPE REPRODUCTION MACHINE. FEB. 18, 1969.
3,430,558.—SHEET COUNTING SYSTEM IN A REPRODUCTION MACHINE. MAR. 4, 1969.

Class 24C 1E 4

3,375,779.—PROGRAMMING CONTROL FOR REPRODUCTION MACHINES. APR. 2, 1968.

Class 24C 1E 5

3,548,748.—DUPLICATING METHOD EMPLOYING SIMULTANEOUS APPLICATION OF ELECTRIC FIELD AND EXPOSURE TO RADIATION. DEC. 22, 1970. CAN. 0882051, GRB. 1227394, JAP. 0752522.
3,565,612.—DUPLICATING MASTERS BY THE MANIFOLD PROCESS. FEB. 23, 1971. ARG. 0193797, AUS. 0411612, BEL. 0708974, CAN. 0873277, FRA. 1549964, GER. 1671590, GRB. 1215956, ITL. 0823464, MEX. 0106608, VZL. 0023681.
3,681,065.—DYE TRANSFER COLOR PHOTOGRAPHY. AUG. 1, 1972.

Class 24C 1E 6

3,527,163.—SILK SCREEN MASTER. SEPT. 8, 1970.
4,199,359.—PHOTOGRAPHIC SCREEN STENCIL PRINTING PROCESS. APR. 22, 1980.

Class 24C 1E 7

3,357,354.—REPRODUCTION METHOD. DEC. 12, 1967.
3,406,137.—IMAGING MATERIAL. OCT. 15, 1968. AUS. 0409415, BEL. 0680375, CAN. 0815085, FRA. 1477912, GER. 1571874, GRB. 1149055, ITL. 0766799, JAP. 0594685, MEX. 0090845, SWD. 0336?60.
3,415,186.—DUPLICATING SYSTEM. DEC. 10, 1968.
3,436,234.—DUPLICATING INK. APR. 1, 1969. AUS. 0408998, BEL. 0680377, CAN. 0806568, FRA. 1477914, GER. 1571875, GRB. 1151495, ITL. 0765635, JAP. 0594687, MEX. 0090362, SWD. 0336421.
3,446,646.—PRESSURE SENSITIVE RECEIVING AND TRANSFER SHEET. MAY 27, 1969. AUS. 0417562, BEL. 0680376, CAN. 0865673, FRA. 1477913, GER. 1571922, GRB. 0115076, ITL. 0765634, JAP. 0575982, MEX. 0090589, SWD. 0333578.

Class 24D

3,275,436.—METHOD OF IMAGE REPRODUCTION UTILIZING A UNIFORM RELEASABLE SURFACE FILM. SEPT. 27, 1966. AUS. 0296158, CAN. 0811877, FRA. 1371894, GRB. 1033523, ITL. 0702168, JAP. 0508402.
3,422,759.—LITHOGRAPHIC IMAGING SYSTEM USING PHOTOCHROMIC AND THERMOCHROMIC MATERIALS. JAN. 21, 1969. CAN. 0855648, GRB. 1190102.
3,460,476.—IMAGING PROCESS. AUG. 12, 1969. ARG. 0164839, AUS. 0418783, BEL. 0691755, CAN. 0882050, FRA. 1511173, GRB. 1168268, ITL. 0787662, JAP. 0562388, MEX. 0108240, SPN. 0346128, STZ. 0480672, SWD. 0331794. VZL. 0024009.
3,547,627.—LITHOGRPHC PRINTG MASTER AND METHOD EMPLOYING A CRYSTALLINE PHOTOCONDUCTIVE IMAGING LAYER. DEC. 15, 1970.
3,554,125.—METHOD OF MAKING A LITHOGRAPHIC MASTER AND METHOD OF PRINTING THEREWITH. JAN. 12, 1971. CAN. 0882052, GER. 1772302, GRB. 1219849.
3,718,087.—APPARATUS FOR APPLYING INK AND IMMISSIBLE FLUID TO A PRINTING SURFACE. FEB. 27, 1973. ARG. 0185945, AUS. 0449639, BEL. 0759110, CAN. 0919007, FRA. 7042608, GRB. 1330183, ITL. 0912865, MEX. 0120782.
3,878,168.—SILICONE ELASTOMERS. APR. 15, 1975.
3,901,151.—PROCESS FOR PREPARING WATERLESS LITHOGRAPHIC MASTERS. AUG. 26, 1975.
3,907,562.—PROCESS FOR PREPARING WATERLESS LITHOGRAPHIC MASTERS. SEPT. 23, 1975.
3,909,256.—ELECTROSTATOGRAPHIC PROCESS FOR PREPARING SCREEN PRINTING MEMBER. SEPT. 30, 1975.
3,923,504.—MIGRATION IMAGING MEMBER AND METHOD. DEC. 2, 1975. GRB. 1461872.
3,948,655.—ELECTROSTATOGRAPHIC PROCESS FOR PREPARING GRAVURE PRINTING MEMBER. APR. 5, 1976.
3,951,060.—PROCESS FOR PREPARING WATERLESS LITHOGRAPHIC MASTERS. APR. 20, 1976.
3,951,063.—PROCESS FOR PREPARING REVERSIBLE CURE WATERLESS LITHOGRAPHIC MASTERS. APR. 20, 1976.
3,957,349.—IMAGING METHOD. MAY 18, 1976.
3,961,947.—PROCESS FOR PREPARING WATERLESS LITHOGRAPHIC MASTERS. JUNE 8, 1976.
3,968,278.—IMAGING METHOD. JULY 6, 1976.
3,971,316.—PROCESS FOR SMOOTHING WATERLESS LITHOGRAPHIC MASTERS. JULY 27, 1976.
3,995,554.—PROCESS FOR PREPARING RESILIENT IMAGED PRINTINGS MASTERS. DEC. 7, 1976.
3,999,481.—METHOD OF MAKING A MASTER. DEC. 28, 1976.
4,003,312.—PROCESS FOR PREPARING WATERLESS LITHOGRAPHIC PRINTING MASTERS BY INK JET PRINTING MEANS. JAN. 18, 1977.
4,005,654.—PROCESS FOR SHALLOW RELIEF PRINTING. FEB. 1, 1977. BEL. 0792620, FRA. 7244602, GRB. 1416158, ITL. 0971749.

4,007,041.—ELECTROPHOTOGRAPHIC PRINTING METHOD. FEB. 8, 1977.
4,009,032.—PROCESS FOR PREPARING WATERLESS PRINTING MASTERS COMPRISING COPOLYMER OF SILOXANE AND THERMOPLA. FEB. 22, 1977.
4,009,660.—INKING IN LITHO PRINTING THROUGH A NON-IMAGED SCREEN. MAR. 1, 1977.
4,010,687.—PLANOGRAPHIC PRINTING MASTER-MULTI PHASE TONERS & MULTI PHASE ADHESIVE LAYERS. MAR. 8, 1977. BEL. 0813293, CAN. 0988364, GRB. 1458725, ITL. 1006438, PTG. 61726.
4,012,254.—NOVEL PHOTOCONDUCTIVE WATERLESS LITHOGRAPHIC PRINTING MASTERS & PROCESS OF PREPARATION. MAR. 15, 1977.
4,016,814.—PLANOGRAPHIC PRINTING MASTER — SPONGY IMAGE PATTERNS. APR. 12, 1977. CAN. 0985952, ITL. 1006441.
4,019,437.—PLANOGRAPHIC PRINTING MASTER TONER INDUCED POROUS SPONGE IMAGES TIPSI. APR. 26, 1977. BEL. 0813159, CAN. 1014416, GRB. 1458723, ITL. 1006440, NZL. 0173942.
4,030,416.—WATERLESS PRINTING MASTER. JUNE 21, 1977.
4,064,312.—NONIMAGED WATERLESS LITHOGRAPHIC MASTER WITH CURABLE SILICONE ELASTOMER AND A CURED INK REL. DEC. 20, 1977.
4,077,324.—METHOD OF FOUNTAINLESS LITHOGRAPHY. MAR. 7, 1978. FRA. 7520962.
4,077,325.—PROCESS FOR PREPARING WATERLESS PRINTING MASTERS. MAR. 7, 1978.
4,078,927.—PHOTOCONDUCTIVE PRINTING MASTER. MAR. 14, 1978.
4,080,897.—SELECTIVE TACK IMAGING AND PRINTING. MAR. 28, 1978.
4,081,572.—PREPARATION OF HYDROPHILIC LITHOGRAPHIC PRINTING MASTERS. MAR. 28, 1978.
4,077,073.—PROCESS FOR PREPARING INK RELEASING STENCIL. MAY 9, 1978.
4,097,138.—PHOTOCONDUCTIVE BELT INCREMENTING APPARATUS. JUNE 27, 1978.
4,100,135.—NOVEL ELASTOMERS AND IMPROVED WATERLESS LITHOGRAPHIC PRINTING MASTERS. JULY 11, 1978.
4,103,616.—ELASTOMERS AND IMPROVED WATERLESS LITHOGRAPHIC PRINTING MASTERS. AUG. 1, 1978.
4,218,514.—PROCESS FOR PREPARING WATERLESS PRINTING MASTERS. AUG. 19, 1980.

Class 24E

3,315,602.—FORMING OF PRINTING PLATES. APR. 25, 1967. CAN. 0852683, GER. 1267227, GRB. 1132071, JAP. 0532965.
3,443,517.—ELECTROSTATIC DUPLICATION SYSTEM EMPLOYING RELIEF PRINTING PLATE. MAY 13, 1969. CAN. 0873982, GRB. 1212370, JAP. 0641477.
3,456,586.—PROCESS FOR MAKING AND USING A RELIEF PRINTING MASTER. JULY 22, 1969.
3,589,290.—RELIEF IMAGING PLATES MADE BY REPETITIVE XEROGRAPHIC PROCESSES. JUNE 29, 1971. CAN. 0896949.
3,957,348.—METHOD FOR ALTERING ELLIPTICALLY POLARIZED LIGHT. MAY 18, 1976.
3,964,907.—METHOD FOR THE PREPARATION OF RELIEF PRINTING MASTERS. JUNE 22, 1976.
4,017,581.—PROCESS FOR PREPARING PRINTING MASTERS & MOLDS. APR. 12, 1977.

Class 24F

3,445,226.—FROST GRAVURE PRINT MASTER. MAY 20, 1969. CAN. 0842443, FRA. 1480896, GRB. 1136029, ITL. 0771305, JAP. 0605647, MEX. 0093298.
3,559,570.—METHOD OF PREPARING AND USING A GRAVURE PRINTING PLATE. FEB. 2, 1971. CAN. 0844544, GRB. 1198142.
3,561,358.—GRAVURE IMAGING SYSTEM. FEB. 9, 1971. CAN. 0908257, GRB. 1201819, JAP. 0594737.
3,638,567.—METHOD OF PREPARING AND UTILIZING A GRAVURE PRINTING MASTER. FEB. 1, 1972.
3,801,315.—GRAVURE IMAGING SYSTEM. APR. 2, 1974. CAN. 0991245, GRB. 1411237.
3,918,400.—BLADE MOUNTING ASSEMBLIES. NOV. 11, 1975. BEL. 0816534, FRA. 7421752, GRB. 1419417.
3,980,404.—XEROGRAPHIC APPARATUS HAVING IMPROVED FLUID DISPENSING MEMBER. SEPT. 14, 1976.
4,024,838.—DEVELOPER LIQUID SUPPLY DEVICE. MAY 24, 1977.

Class 24G

3,565,978.—REPLICATION OF SURFACE DEFORMATION IMAGES. FEB. 23, 1971. AUS. 0417038, BEL. 0710829, CAN. 0879916, FRA. 1583418, GER. 1621783, GRB. 1221342, ITL. 0863054, MEX. 0096672.
3,592,114.—APPARATUS FOR JUSTIFYING A REPRODUCED LINE OF CHARACTERS. JULY 13, 1971.
3,678,850.—POROUS PRINTING PLATE PREPARED FROM PARTICULATE PHOTOSENSITIVE RESINOUS MATERIAL. JULY 25, 1972. CAN. 0844327, GRB. 1188376, JAP. 0635879.
4,059,554.—STABILIZE EMULSION INKS. NOV. 22, 1977.
4,068,588.—PRINTING USING AN ELECTROCHROMIC IMAGE. JAN. 17, 1978.
4,093,371.—COMPOSING MACHINE. JUNE 6, 1978.

Class 25

3,692,659.—ELECTROLYTIC REVERSIBLE COLOR DISPLAY DEVICE. SEPT. 19, 1972. CAN. 0932427, GRB. 1356187.
4,056,822.—LOW PROFILE SINGLE CHANNEL THERMAL ANALOG RECORDER. NOV. 1, 1977.
4,056,823.—ANALOG CHART RECORDER EMPLOYING THERMAL PRINTING MEANS. NOV. 1, 1977.
4,099,071.—MONOLITHIC ELECTRONIC SCANNING DEVICE. JULY 4, 1978.
4,104, 515.—CONSUMABLE CREDIT CARD. AUG. 1, 1978.
4,118,112.—METHOD FOR REDUCING POWER DISSIPATION IN TAPERED RESISTOR DEVICES. OCT. 3, 1978.
4,121,153.—TAPERED RESISTOR METER. OCT. 17, 1978.
4,126,824.—PROGRESSIVELY SHORTED TAPERED RESISTANCE DEVICE. NOV. 21, 1978.

Class 25A

3,692,404.—STRIPPABLE LAYER RELIEF PRINTING. SEPT. 19, 1972.
3,900,817.—SPHERICAL POTENTIOMETER WITH BALL CONTACT MEANS. AUG. 19, 1975.
3,990,072.—ACOUSTIC RESIDUE ALGEBRA DECORDER. NOV. 2, 1976.

Class 25A 1

3,207,127.—APPARATUS FOR FORMING COATINGS ON PRINTED CIRCUIT BOARDS. SEPT. 21, 1965. CAN. 0733463, FRA. 1374360, GER. 1490985, GRB. 1053284, ITL. 0696974.
3,217,209.—PRINTED CIRCUITS WITH RESISTIVE AND CAPACITIVE ELEMENTS. NOV. 9, 1965. CAN. 0782178, FRA. 1300771, GER. 1202853, GRB. 0978571, ITL. 0647493, JAP. 0430795.
3,219,309.—AN APPARATUS FOR AUTOMATIC FABRICATION OF MICROCIRCUITRY. NOV. 23, 1965. CAN. 0785448, GRB. 1031288, JAP. 0477810.
3,288,639.—METHOD FOR MAKING A PLURAL LAYERED PRINTED CIRCUIT BOARD. NOV. 29, 1966.
3,485,934.—CIRCUIT BOARD. DEC. 23, 1969.
3,893,409.—APPARATUS FOR SOLDER COATING PRINTED CIRCUIT. JULY 8, 1975.
3,990,024.—MICROSTRIP STRIPLINE IMPEDANCE TRANSFORMER. NOV. 2, 1976.
4,018,414.—HOLDING FIXTURES. APR. 19, 1977.
4,024,631.—PRINTED CIRCUIT BOARD PLATING PROCESS. MAY 24, 1977.
4,029,373.—MEANS FOR WIRING INTO A SEALED ENCLOSURE. JUNE 14, 1977. CAN. 0995367, GRB. 1444032.
3,134,930.—MICROMINIATURE CIRCUITRY. MAY 26, 1964.
4,046,105.—LAMINAR DEEP WAVE GENERATOR. SEPT. 6, 1977.
4,048,718.—PIN CRIMPING APPARATUS AND PRODUCT THEREFROM. SEPT. 20, 1977.
4,083,323.—PNEUMATIC SYSTEM FOR SOLDER LEVELING APPARATUS. APR. 11, 1978.
4,125,136.—CUT AND CLINCH MECHANISM. NOV. 14, 1978.
4,179,797.—METHOD OF MAKING A RESISTOR ARRAY. DEC. 25 1979.
4,254,301.—PRINTED CIRCUIT BOARD COMPONENT MOUNTING SUPPORT AND SPACER. MAR. 3, 1981.

Class 25A 2

3,164,750.—ELECTRONIC PACKAGING APPARATUS. JAN. 5, 1965.
3,445,926.—PRODUCTION OF SEMICONDUCTOR DEVICES BY USE OF ION BEAM IMPLANTATION. MAY 27, 1969.

3,906,537.—SOLID STE ELMNT CMPRSNG SMICNDCTVE GLS CMPSTN EXHBING NGTVE INCRMNTL RSISTNCE AND TRSHLD SWTCHNG. SEPT. 16, 1975. BEL. 0820772, CAN. 1005929.
3,956,042.—SELECTIVE ETCHANTS FOR THIN FILM DEVICES. MAY 11, 1976.
4,181,913.—RESITIVE ELECTRODE AMORPHOUS SEMICONDUCTOR NEGATIVE RESISTANCE DEVICE. JAN. 1, 1980.
4,215,354.—SUPPRESSION OF CROSS-COUPLING IN MULTI-ORIFICE PRESSURE PULSE DROP-EJECTOR SYSTEMS. JULY 29, 1980.

Class 25A 3

3,244,556.—ABRASION FOR THIN FILM RESISTANCE CONTROL. APR. 5, 1966. CAN. 0788954, FRA. 1385420, GER. 1490986, GRB. 1054076, ITL. 0705899, JAP. 0453904.
3,274,372.—SOLID VAPORIZATION. SEPT. 20, 1966.
3,287,161.—METHOD FOR FORMING A THIN FILM RESISTOR. NOV. 22, 1966. CAN. 0819895, ITL. 0705900, JAP. 0499787.
3,352,731.—THIN FILM PRINTED CIRCUIT. NOV. 14, 1967. AUS. 0296168, CAN. 0790796, FRA. 1419084, GER. 1490987, GRB. 1077686, ITL. 0739442, JAP. 0537661.
3,413,716.—THIN FILM INDUCTOR ELEMENTS. DEC. 3, 1968. CAN. 0841245, FRA. 1476476, GRB. 1149759.
3,832,766.—APPARATUS FOR ASSEMBLING A PLATED WIRE MEMORY PLANE. SEPT. 3, 1974. CAN. 0942420, GRB. 1376654.

Class 25A 4

3,317,656.—ELECTRICAL CONNECTION FOR SHEATHED CONDUCTORS. MAY 2, 1967.
3,603,357.—BACKWIRING. SEPT. 7, 1971.
3,644,659.—CABLE CONSTRUCTION. FEB. 22, 1972.
3,792,227.—FUSER APPARATUS. FEB. 12, 1974.
3,847,479.—COVER FOR WIRE WRAPPED CARD CHASSIS. NOV. 12, 1974.
3,861,775.—MULTIPLE CIRCUIT BOARD CONNECTOR. JAN. 21, 1975. GRB. 1419580.
3,869,696.—FUSER APPARATUS. MAR. 4, 1975.
3,903,937.—BACK WIRING. SEPT. 9, 1975.
4,045,750.—ELECTRICAL CABLE AND COUPLING ARRANGEMENT. AUG. 30, 1977. FRA. 7631197.

Class 25B

3,688,127.—DIGITAL CIRCUIT LOGIC. AUG. 29, 1972.
3,937,986.—LINEAR WAVEFORM GENERATOR. FEB. 10, 1976.
3,975,755.—STABLE NON-CRYSTALLINE MATERIAL FOR SWITCHING DEVICES. AUG. 17, 1976.
4,095,020.—PROCESS FOR CONTROLLED PHASE TRANSFORMATION OF ALPHA PHASE OF POLY (VINYLIDENE FLUORIDE) TO. JUNE 13, 1978.

Class 25B 1

3,384,792.—STACKED ELECTRODE FIELD EFFECT TRIODE. MAY 21, 1968.
3,584,268.—INVERTED SPACE CHARGE LIMITED TRIODE. JUNE 8, 1971.
3,599,321.—INVERTED SPACE CHARGE LIMITED TRIODE. AUG. 17, 1971.

Class 25B 2

3,510,735.—HIGH SPEED SEMICONDUCTOR. MAY 5, 1970.
3,673,572.—ELECTROLUMINESCENT DEVICE. JUNE 27, 1972. CAN. 0919286.
3,697,163.—PLUG-IN VACUUM AND CIRCUIT SYSTEM FOR ELECTROSTATIC PRINTING MACHINES. OCT. 10, 1972. CAN. 0941883.

Class 25B 3

3,551,727.—THERMIONIC CONVERTER HAVING A LOW FUNCTION COLLECTOR ELECTRODE. DEC. 29, 1970.
3,928,812.—PROGRAMMABLE BIT CLOCK OSCILLATOR FOR CONTROLLING THE PROCESSING OF BINARY DIGITS. DEC. 23, 1975. CAN. 0997434.

Class 25B 4

3,579,031.—ZERO ARC DROP THYRATRON. MAY 18, 1971.

Class 25C

3,911,420.—DISPLAY SYSTEM INCLUDING A HIGH-RESOLUTION CHARACTER GENERATOR. OCT. 7, 1975.
3,937,937.—PRIMARY POWER FAULT DETECTOR. FEB. 10, 1976. CAN. 1011818.
4,045,750.—ELECTRICAL CABLE AND COUPLING ARRANGEMENT. AUG. 30, 1977. FRA. 7631197.
4,136,277.—EXPOSURE CONTROL SYSTEM FOR A DOCUMENT COPYING MACHINE. JAN. 23, 1979. GRB. 1529220.

Class 25C 1

3,296,483.—WIDEBND AMPLER UTLZNG COMN ELCTRN BEAM FR INTRACTN W/HIFRQCY TRVLGWAVE LINE AND W/LOWFRQCY ELCTRN M. JAN. 3, 1967.
3,299,367.—FEEDBACK AMPLIFIER. JAN. 17, 1967.
3,404,341.—ELECTROMETER UTILIZING A DUAL PURPOSE FIELD-EFFECT TRANSISTOR. OCT. 1, 1968.
3,457,520.—FIELD EFFECT TRANSISTOR BUFFER AMPLIFIER. JULY 22, 1969. CAN. 0830628, FRA. 1541017, GER. 1562109, GRB. 1189515, ITL. 0806188, JAP. 0573712.
3,525,948.—SEISMIC AMPLIFIERS. AUG. 25, 1970.
3,594,654.—DIRECT COUPLED DIFFERENTIAL AMPLIFIER. JULY 20, 1971.
3,790,288.—PHOTOMETER INCLUDING VARIABLE AMPLIFICATION AND DARK CURRENT-COMPENSATION. FEB. 5, 1974.

Class 25C 2

3,316,495.—LOW LEVEL COMMUTATOR. APR. 25, 1967.
3,426,259.—ELECTRIC CONTROL CIRCUITS FOR SEQUENTIAL OPERATION OF MOTIVE MEANS. FEB. 4, 1969.
3,454,884.—DUTY CYCLE CONTROL CIRCUIT. JULY 8, 1969. CAN. 0859886, GRB. 1195983, JAP. 0576017.
3,612,907.—SELF-CHECKING FLIP-FLOP. OCT. 12, 1971.
3,668,414.—TRANSITION INTEGRATION SWITCHING AMPLIFIER. JUNE 6, 1972. ARG. 0183473, AUS. 0460647, BEL. 0765005, CAN. 0930432, FRA. 7111626, GRB. 1334407, ITL. 0921529, MEX. 0119755, USR. 0420197, VZL. 0027511.
3,795,857.—ELECTRICAL CONNECTOR TESTING APPARATUS HAVING A PLURALITY OF AND GATES. MAR. 5, 1974.
3,806,242.—APPARATUS FOR REGULATING OPERATION OF DEV IN ACCORDANCE W SUPPLY OF MATERIAL UPON WHICH DEV OPER. APR. 23, 1974. CAN. 1004288, GRB. 1387190.
3,828,222.—FLASH LAMP CIRCUIT. AUG. 6, 1974.
3,856,997.—INDICATING AND SWITCHING APPARATUS. DEC. 24, 1974. BEL. 0809124, CAN. 1004261, ITL. 1002375, MEX. 0135820, SPN. 0421710.
3,866,051.—DIGITAL INTERFACE MODULE. FEB. 11, 1975. BEL. 0810490, GBR. 1455213.
3,932,770.—CONTROL CIRCUIT FOR SWITCHING TRIACS. JAN. 13, 1976.
4,119,840.—FAST-ACTING GAIN PHOTOCURRENT DEVICE. OCT. 10, 1978.

Class 25C 3

3,311,810.—STATIC FREQUENCY MULTIPLIER UTILIZING A PLURALITY OF SATURABLE MAGNETIC CORES. MAR. 28, 1967.
3,340,416.—RADIATION GENERATOR HVNG A CONDCTV COATNG ON A PIEZO-ELCTRC DIFFRCTN GRATING FOR VARYNG OTPT FR. SEPT. 5, 1967.
3,373,377.—SELF-ADJUSTING VARIABLE FREQUENCY SAWTOOTH GENERATOR. MAR. 12, 1968.
3,543,080.—CRT PINCUSHION DISTORTION CORRECTION APPARATUS. NOV. 24, 1970.
3,659,207.—MULTI-WAVE FORM GENERATION FROM A SINGLE TAPPED DELAY LINE. APR. 25, 1972.
4,048,571.—FREQUENCY DOUBLER. SEPT. 13, 1977.

Class 25C 4

RE.27,720.—SIGNAL STORAGE DEVICE - RE OF 3416,861-D1593. AUG. 7, 1973.
3,280,309.—LOGARITHMIC PULSE COUNTER. OCT. 18, 1966.
3,416,861.—SIGNAL STORAGE DEVICE—REISSUED D72104-27,720. DEC. 17, 1968. CAN. 0824770, GER. 1524998, GRB. 1184579, JAP. 0571176.
3,422,287.—PULSE STRETCHING CIRCUIT FOR GENERATING PULSES OF MINIMUM WIDTH. JAN. 14,

1969. AUS. 0408950, CAN. 0814593, GRB. 1087749, ITL. 0773401, SWD. 0337041.
3,593,043.—PULSE SHAPING CIRCUIT. JULY 13, 1971.
3,600,610.—TIME DELAY CIRCUIT FOR A RADIANT ENERGY PROTECTIVE APPARATUS. AUG. 17, 1971.
3,757,032.—METHOD AND APPARATUS FOR SELECTIVELY ENABLING A REMOTE RECEIVER. SEPT. 4, 1973.
3,781,548.—CONTROL SYSTEM. DEC. 25, 1973.
3,816,727.—ECHO CHECK CIRCUIT. JUNE 11, 1974. CAN. 0999463, FRA. 7341866, GRB. 1422835.
3,839,665.—APP MEASRNG RELTV VELCTY MOVBL MEMBR INCLDNG MEANS TO DETECT VELCTY FROM POSITION ENCODER. OCT. 1, 1974. CAN. 0980409, GRB. 1290090, JAP. 0832378.
3,863,143.—APP FOR RECORDING THE OCCURRENCE OF A PREDETERMINED OPERATION BY SENSING MAGNETIC FIELD OPERATION. JAN. 28, 1975.
3,875,387.—MAGNETIC OPERATIONS MONITOR. APR. 1, 1975.
3,931,580.—DIGITAL LINE RECEIVER CIRCUIT. JAN. 6, 1976.
3,953,708.—THERMAL PRINTER USING AMORPHOUS SEMICONDUCTOR DEVICES. APR. 27, 1976.
3,971,919.—PROGRAMMABLE BILLING SYSTEM. JULY 27, 1976. BEL. 0812673, FRA. 7409746, GRB. 1451993, ITL. 1007663, SPN. 0424543.
3,983,315.—ELECTROMAGENTIC COUNTER CIRCUIT. SEPT. 28, 1976.
3,987,311.—SHIFT REGISTER UTILIZING AMORPHOUS SEMICONDUCTOR THRESHOLD SWITCHE. OCT. 19, 1976.
3,989,930.—MULTI-MODE BILLING SYSTEM CONTROLLED BY COPY SIZE AND DOCUMENT ORIGINAL SIZE. NOV. 2, 1976.
4,119,907.—POWER FACTOR CORRECTOR FOR A RESISTIVE LOAD. OCT. 10, 1978.
4,140,962.—HIGH VOLTAGE REGULATOR USING LIGHT DEPENDENT RESISTOR. FEB. 20, 1979. BEL. 867865.
4,237,495.—CIRCUIT FOR DOUBLING THE NUMBER OF OUTPUT HITS OF A PHOTODIODE ARRAY. DEC. 2, 1980.

Class 25C 5

3,275,837.—XEROGRAPHIC CHARGING APPARATUS. SEPT. 27, 1966. ARG. 0158430, ATR. 0242511, AUS. 0276177, BEL. 0642095, CAN. 0753356, FRA. 1385736, GER. 1488286, GRB. 1040264, ITL. 0712888, JAP. 0477814, MEX. 0075819, STZ. 0460930, SWD. 0314133.
3,496,385.—HIGH VOLTAGE COMPENSATED TRANSISTORIZED SWITCHING APPARATUS. FEB. 17, 1970. CAN. 0853862, FRA. 1521443, GRB. 1181718, ITL. 0793728, JAP. 0592682.
3,522,509.—FLOATING POWER SUPPLY. AUG. 4, 1970.
3,809,916.—DUAL CORD INTERLOCK. MAY 7, 1974. CAN. 1004283, GRB. 1423758.
3,870,903.—PHASE CONTROLLED POWER SUPPLY. MAR. 11, 1975.
3,922,595.—HIGH POWER REGULATED D C SUPPLY. NOV. 25, 1975.
3,961,236.—CONSTANT POWER REGULATOR FOR XEROGRAPHIC FUSING SYSTEM. JUNE 1, 1976.
4,004,209.—WIDE RANGE POWER CONVERSION SYSTEM. JAN. 18, 1977.

Class 25C 6

3,192,519.—DIGITAL TRANSIENT ANALYZER. JUNE 29, 1965.
3,376,490.—SYNTHESIZED WAVE STATIC INVERTERS. APR. 2, 1968.
3,508,080.—BRIDGE GATING NETWORK HAVING POWER GAIN. APR. 21, 1970.
3,555,540.—DIGITAL TO ANALOG CONVERTER WITH SMOOTHED RECOVERY. JAN. 12, 1971.
3,599,037.—GAS LAMP LEAD BALLAST CIRCUIT HAVING FEED CONTROL. AUG. 10, 1971. ARG. 0182960, BEL. 0749784, CAN. 0907126, FRA. 7015813, GRB. 1308525, ITL. 0900023, MEX. 0116550.
3,638,089.—SPEED CONTROL SYSTEM HAVING HIGH AND LOW LEVEL SPEED MEANS. JAN. 25, 1972. GRB. 1322611.
3,670,269.—AUTOMATIC TRANSVERSAL EQUALIZER. JUNE 13, 1972. CAN. 0932412, GRB. 1353018.
3,689,915.—ENCODING SYSTEM. SEPT. 5, 1972. CAN. 0870252, GER. 1562051, GRB. 1207701, JAP. 0675600.
3,691,542.—MAGNETIC MEMORY DISK DRIVE APPARATUS WITH REDUCED R.F. NOISE. SEPT. 12, 1972. GRB. 1328717, JAP. 0840914.
3,699,555.—APPARATUS FOR RAPID ACTION DISPLACEMENT CONTROL. OCT. 17, 1972. CAN. 985413, GRB. 1366124.
3,737,569.—TRANSMISSION DEVICE. JUNE 5, 1973.
3,742,374.—TRANSDUCER DEVICE. JUNE 26, 1973.
3,761,799.—CURRENT STABILIZING CIRCUIT HAVING MINIMAL LEAKAGE CURRENT EFFECTS. SEPT. 25, 1973. BEL. 0792285. FRA. 7243406, GRB. 1395600, ITL. 0971515, MEX. 131737.
3,778,817.—OUTPUT KEYBOARD APPARATUS AND SIGNAL TRANSLATING METHODS THEREFOR. DEC. 11, 1973.
3,795,857.—ELECTRICAL CONNECTOR TESTING APPARATUS HAVING A PLURALITY OF AND GATES. MAR. 5, 1974.
3,818,297.—MOTOR CONTROL APPARATUS. JUNE 18, 1974. CAN 1004296, GRB. 1454269.
3,832,065.—DRUM TRACK DETECTOR. AUG. 27, 1974. GRB. 1458283.
3,880,516.—DIAGNOSTIC CIRCUIT BOARD. APR. 29, 1975. BEL. 0808231, FRA. 7342590, GRB. 1447394, ITL. 1002163, SPN. 421149.
3,904,922.—LAMP CONTROL AND LAMP SWITCH CIRCUIT. SEPT. 9, 1975.
3,906,194.—SIGNAL PROCESSOR. SEPT. 16, 1975.
3,909,125.—STEPPER MOTOR CONTROL. SEPT. 30, 1975.
3,918,046.—DIGITAL TO ANALOG CONVERTER. NOV. 4, 1975. ARG. 0197211, BEL. 0795801, FRA. 7305890, GRB. 1417772, ITL. 0979289, MEX. 131264, SPN. 0411883, STZ. 0564887.
3,922,595.—HIGH POWER REGULATED D C SUPPLY. NOV. 25, 1975.
3,928,772.—TIME DEPENDENT FAULT DETECTOR. DEC. 23, 1975. BEL. 0826690.
3,989,371.—CYCLE-OUT LOGIC FOR A MULTI-MODE COPIER/DUPLICATOR. NOV. 2, 1976.
3,991,355.—STEPPER MOTOR CONTROL. NOV. 9, 1976.
4,002,409.—CHAIN-FEED CONTROL LOGIC FOR A MULTI-MODE COPIER/DUPLICATOR. JAN. 11, 1977. BEL. 0840300.
4,074,147.—SWITCHING AMPLIFIERS. FEB. 14, 1978.
4,101,788.—MOS BUFFER CIRCUIT. JULY 18, 1978.
4,103,252.—CAPACITIVE TOUCH-ACTIVATED TRANSDUCER SYSTEM INCLUDING A PLURALITY OF OSCILLATORS. JULY 25, 1978.
4,129,807.—CURRENT REGULATING CIRCUIT FOR MAGNETIC DEFLECTION SYSTEMS. DEC. 12, 1978.
4,163,988.—SPLIT GATE V GROOVE FET. AUG. 7, 1979.
4,177,421.—CAPACITIVE TRANSDUCER. DEC. 4, 1979.
4,193,079.—MESFELT WITH NON-UNIFORM DOPING. MAR. 11, 1980.
4,240,068.—CCD ANALOG TO DIGITAL CONVERTER. DEC. 16, 1980.
4,266,842.—TRANSMISSION LINE ACTIVE COAXIAL TAP. MAY 12, 1981.
4,272,759.—16 BIT ANALOG TO DIGITAL CONVERTER. JUNE 9, 1981.

Class 26

D.225,572.—BOOK STACKING UNIT FOR XEROGRAPHIC REPRODUCTION MACHINE. DEC. 19, 1972.
D.231,127.—COPYING MACHINE-LARGE DOCUMENT COPYING FRAME-DECOY. APR. 2, 1974.
D.231,128.—COPYING MACHINE. APR. 2, 1974.
D.231,129.—COPYING MACHINE. APR. 2, 1974.
D.231,564.—COPYING MACHINE. APR. 30, 1974.
D.236,030.—PAPER TRAY. JULY 22, 1975.
D.236,446.—CART. AUG. 26, 1975.
D.236,491.—COMPUTER CABINET. AUG. 26, 1975.
D.236,897.—COMPUTER CABINET. SEPT. 23, 1975.
D.236,961.—BALANCE SCALE. SEPT. 30, 1975.
D.238,450.—PAPER CASSETTE. JAN. 13, 1976.
D.238,966.—COPIER EVENT RECORDER. FEB. 24, 1976.
D.239,063.—STORAGE UNIT. MAR. 9, 1976.
D.239,064.—STORAGE UNIT. MAR. 9, 1976.
D.239,065.—STORAGE UNIT. MAR. 9, 1976.
D.239,066.—STORAGE UNIT. MAR. 9, 1976.
D.239,067.—STORAGE AND DISPLAY UNIT. MAR. 9, 1976.
D.239,106.—SEMICONDUCTOR EDUCATIONAL BOARD. MAR. 9, 1976.
D.239,107.—PARALLEL RL/RC CIRCUITS EDUCATIONAL BOARD. MAR. 9, 1976.
D.239,108.—RLC CIRCUITS EDUCATIONAL BOARD. MAR. 9, 1976.
D.239,109.—SERIES RL AND RC CIRCUITS EDUCATIONAL BOARD. MAR. 9, 1976.
D.239,110.—EDUCATIONAL DEVICE FOR LEARNING ABOUT RECTIFIERS AND FILTERS. MAR. 9, 1976.
D.239,351.—STORAGE AND DISPLAY UNIT. MAR. 30, 1976.

D.239,392.—COMPUTER CABINET. MAR. 30, 1976.
D.239,750.—STORAGE UNIT. MAY 4, 1976.
D.239,995.—STORAGE UNIT. MAY 25, 1976.
D.240,192.—DESIGN FOR MICROFILM REEL. JUNE 8, 1976.
D.240,540.—COMPUTER TERMINAL. JULY 13, 1976.
D.240,554.—DUPLICATING MACHINE WITH SORTER. JULY 13, 1976.
D.240,555.—SORTER. JULY 13, 1976.
D.240,557.—TRAY RACK. JULY 13, 1976.
D.240,965.—COIN OPERATED REPRODUCTION MACHINE. AUG. 10, 1976.
D.241,982.—ADAPTER FOR COMPRESSING HUMAN BODY ORGANS FOR X-RAY TREATMENT OR THE LIKE. OCT. 19, 1976.
D.246,226.—TONER CONTAINER OR THE LIKE. NOV. 1, 1977.
D.247,673.—STRIPPER PAD. APR. 4, 1978.
D.247,674.—STRIPPER PAD. APR. 4, 1978.
D.247,675.—STRIPPER PAD. APR. 4, 1978.
D.248,765.—MICROFICHE COPIER. AUG. 1, 1978.
D.250,765.—FANFOLD SHEET STACKING TRAY. JAN. 9, 1979.

Class 26A

D.200,130.—XEROGRAPHIC CAMERA. JAN. 19, 1965.
D.200,448.—DOCUMENT REPRODUCING APPARATUS. FEB. 23, 1965.
D.205,806.—REPRODUCTION MACHINE. SEPT. 20, 1966.
D.227,933.—SORTER. JULY 24, 1973.
D.236,850.—CONTROL PANEL FOR A COPIER. SEPT. 16, 1975.
D.237,905.—CONTROL PANEL OF A COLOR ELECTROPHOTOGRAPHIC PRINTING MACHINE. DEC. 2, 1975.
D.238,779.—DOCUMENT TRAY. FEB. 10, 1976.
D.238,818.—PLATEN COVER FOR COPIER. FEB. 10, 1976.
D.239,138.—XEROGRAPHIC COPIER. MAR. 9, 1976.

Class 26A 1

D.200,272.—DOCUMENT REPRODUCING APPARATUS. FEB. 9, 1965. CAN. 2092730.
D.200,448.—DOCUMENT REPRODUCING APPARATUS. FEB. 23, 1965.
D.205,558.—REPRODUCTION MACHINE. AUG. 16, 1966.
D.205,806.—REPRODUCTION MACHINE. SEPT. 20, 1966.
D.208,337.—XEROGRAPHIC DOCUMENT REPRODUCING APPARATUS OR SIMILAR ARTICLE. AUG. 15, 1967.
D.210,558.—DOCUMENT REPRODUCING MACHINE. MAR. 19, 1968.
D.210,630.—DOCUMENT REPRODUCING APPARATUS. MAR. 26, 1968.
D.210,856.—DOCUMENT REPRODUCING APPARATUS. APR. 23, 1968.
D.214,699.—DOCUMENT REPRODUCING MACHINE. JULY 15, 1969. ARG. 0011028, CAN. 2543184, MEX. 0011135.
D.218,199.—DOCUMENT REPRODUCING MACHINE. JULY 28, 1970. CAN. 0033011, GRB. 0946459.
D.218,201.—REPRODUCTION MACHINE. JULY 28, 1970. ARG. 0014313, BEL. 0017005, CAN. 0033518, CHL. 0000996, GRB. 0946818, JAP. 0363075, MEX. 0011194, PNM. 0002073, VZL. 0000744.
D.219,889.—XEROGRAPHIC PROCESSOR HOUSING. FEB. 9, 1971.
D.221,694.—XEROGRAPHIC PROCESS HOUSINO. AUG. 31, 1971.
D.227,931.—ELECTROPHOTOGRAPHIC PRINTING MACHINE. JULY 24, 1973.
D.230,513.—REPRODUCTION MACHINE. FEB. 26, 1974.
D.238,737.—COPYING MACHINE STAND. FEB. 10, 1976.
D.243,008.—COIN OPERATED REPRODUCTION MACHINE. JAN. 11, 1977.

Class 26A 2

D.214,959.—AUTOMATIC DOCUMENT FEEDING APPARATUS FOR XEROGRAPHIC REPRODUCING MACHINES OR THE LIKE. AUG. 12, 1969. CAN. 0032540, GER. DES5715, GRB. 0942720.
D.227,034.—DOCUMENT FEEDER FOR A XEROGRAPHIC REPRODUCTION. MAY 29, 1973.
D246,373.—PAPER OVERFEED TRAY. NOV. 15, 1977.

Class 26A 3

D.200,129.—XEROGRAPHIC TRANSFER AND FUSING APPARATUS. JAN. 19, 1965.
D.233,481.—XEROGRAPHIC VAPOR FUSING APPARATUS. OCT. 29, 1974.

Class 26A 4

D.201,405.—XEROGRAPHIC PRINTER. JUNE 15, 1965.
D.220,188.—MOBILE PRINTER. MAR. 16, 1971. CAN. 0033207, GER. 0MR6294, GRB. 0946460, JAP. 0443861.
D.230,517.—COMPUTER OUTPUT PRINTER. FEB. 26, 1974.
D.232,125.—CHARACTER PRINT MEMBER. JULY 16, 1974.
D.237,010.—COMBINED RIBBON AND CARTRIDGE THEREFOR. SEPT. 30, 1975. FRA. 0073134, GRB. 0967791, ITL. 0010845.
D.238,904.—CHARACTER PRINT MEMBER. FEB. 17, 1976.
D.238,968.—CHARACTER PRINT MEMBER. FEB. 24, 1976. FRA. 0073135, GER. 0009989, GRB. 0967792, ITL. 0010846.
D.250,950.—CONTROL CONSOLE MODULE FOR A COMPUTER PRINTER. JAN. 30, 1979.
D.250,952.—MODULAR COMPUTER PRINTER. JAN. 30, 1979.
D.250,953.—MODULAR COMPUTER PRINTER. JAN. 30, 1979.
D.250,954.—MODULAR COMPUTER PRINTER. JAN. 30, 1979.

Class 26A 5

D.200,130.—XEROGRAPHIC CAMERA. JAN. 19, 1965.

Class 26B

D.209,408.—CABINET FOR SORTING AND HOLDING SHEETS OF PRINTED MATERIAL. NOV. 28, 1967.
D.209,409.—MODULAR CABINET FOR SORTING AND HOLDING SHEETS OF PRINTED MATERIAL. NOV. 28, 1967.
D.209,872.—DOCUMENT REPRODUCING AND SORTING MACHINE. JAN. 9, 1968.
D.212,227.—A TAPE CONTRL UNIT FOR AN AUTOMATIC SORTER OR THE LIKE. SEPT. 17, 1968.
D.224,054.—XEROGRAPHIC REPRODUCTION MACHINE OR THE LIKE. JUNE 27, 1972.
D.230,515.—DOCUMENT REPRODUCING AND SORTING MACHINE. FEB. 26, 1974.
D.236,330.—REPRODUCTION MACHINE STACKING CART. AUG. 19, 1975.
D.236,924.—PAPER HANDLING STAND. SEPT. 30, 1975.
D.237,871.—REPRODUCTION MACHINE STACKING CART. DEC. 2, 1975.
D.238,779.—DOCUMENT TRAY. FEB. 10, 1976.

Class 26C

D.205,910.—A CAN. OCT. 4, 1966.
D.208,377.—CONTAINER FOR XEROGRAPHIC TONER POWDER. AUG. 22, 1967.
D.211,928.—BOTTLE. AUG. 13, 1968.
D.218,152.—CONTAINER FOR XEROGRAPHIC POWDER. JULY 28, 1970. CAN. 0032629, GRB. 0944047.
D.236,694.—DEVELOPER MIX STORAGE CONTAINER. SEPT. 9, 1975.
D.240,201.—TONER PARTICLE STORAGE CONTAINER-DESIGN FOR TONER CARTRIDGE. JUNE 8, 1976.
D.244,007.—TONER BOTTLES. APR. 12, 1977.
D.252,557.—TONER CONTAINER. AUG. 7, 1979.

Class 26D

D.216,647.—SPRING SCALE. FEB. 24, 1970. CAN. 0032577, GRB. 0943939.
D.220,011.—ARTICLE ADDRESSING MACHINE. FEB. 23, 1971.
3,666,948.—LIQUID CRYSTAL INFRARED IMAGING SYSTEM HAVING AN UNDISTURBED IMAGE ON A DISTURBED BACKGROUND. MAY 30, 1972. CAN. 0964455, GRB. 1387276.
3,737,896.—APPARATUS FOR RECOVERY OF RECORDED BIT INFORMATION IN A MAGNETIC RECORDING MEDIUM. JUNE 5, 1973. AUS. 0471989, BEL. 0790688, CAN. 1008967, STZ. 0563642.
D.246,102.—FILM REEL (DESIGN). OCT. 18, 1977.

Class 26E

D.200,128.—FACSIMILE RECEIVER. JAN. 19, 1965.

Class 26E 1

D.200,127.—FACSIMILE TRANSMITTER. JAN. 19, 1965.
D.200,128.—FACSIMILE RECEIVER. JAN. 19, 1965.
D.215,218.—FACSIMILE TRANSCEIVER. SEPT. 16, 1969. ARG. 0010244, BEL. 0016600, CAN. 2493134, FRA.

0096592, GER. 0005411, GRB. 0939330, ITL. 0134198. MEX. 0010900.
D.218,170.—FACSIMILE TRANSCEIVER. JULY 28, 1970. GRB. 0944047.
D.225,860.—HOUSING FOR ELECTRONIC APPARATUS. JAN. 9, 1973.
D.225,861.—HOUSING FOR ELECTRONIC APPARATUS. JAN. 9, 1973.
D.225,867.—UNATTENDED TELEPHONE ANSWERING APPARATUS OR SIMILAR ARTICLE. JAN. 9, 1973.
D.227,121.—FACSIMILE TRANSCEIVER APPARATUS. JUNE 5, 1973.
D.227,122.—FACSIMILE TRANSCEIVER APPARATUS. JUNE 5, 1973.

Class 26E 2

D.215,849.—A ROLL-FEED APPARATUS FOR A FACSIMILE TRANSCEIVER. NOV. 4, 1969. ARG. 0011067, BEL. 0016764, CAN. 0032344, GER. DES5719, GRB. 0942723, ITL. 0138774, MEX. 0010975, PNM. 0001983, VZL. 0000663.
D.216,123.—FLEXIBLE SHEET MATERIAL GUIDE FOR A FACSIMILE TRANSCEIVER OR SIMILAR ARTICLE. NOV. 25, 1969. GRB. 0942748.
D.216,564.—GUIDE FOR FLEXIBLE SHEET MATERIAL FOR FACSIMILE TRANSCEIVER OR SIMILAR ARTICLE. FEB. 10, 1970. ARG. 0011068, BEL. 0016763, GER. DES5716, GRB. 0942723, ITL. 0138775, MEX. 0011018, PNM. 0001401, VZL. 0000662.
D.249,688.—PAPER TAKE UP REEL OR SIMILAR ARTICLE FOR A WEB FED FACSIMILE TRANSCEIVER OF THE LIKE. SEPT. 26, 1978.

Class 26E 3

D.210,589.—ELECTRONIC ADAPTER FOR FACSIMILE COMPUTER SYSTEM. MAR. 26, 1968.

Class 26F

D.203,012.—DESIGN FOR A MACHINE FOR APPLYING INTELLIGENCE TO A MOVING ARTICLE. NOV. 23, 1965.
D.244,943.—FILM REEL (DESIGN). JULY 5, 1977.
D.246,102.—FILM REEL (DESIGN). OCT. 18, 1977.
D.247,667.—FILM REEL (DESIGN). APR. 4, 1978.

Class 26F 1

D.202,746.—MICROFICHE PRINTER. NOV. 2, 1965.
D.217,739.—COMBINED MICROFILM VIEWER AND REPRODUCING MACHINE ACCESSORY. JUNE 2, 1970. CAN. 0032698.
D.218,782.—PROJECTION VIEWER. SEPT. 22, 1970. CAN. 0033031, GER. OMR6147, GRB. 0945494, JAP. 413894.
D.218,783.—COMBINATION FILM VIEWING AND REPRODUCING MACHINE. SEPT. 22, 1970. CAN. 0033032, GER. OMR6146, GRB. 0945495, JAP. 0377263.
D.233,369.—MICROFILM XEROGRAPHIC MACHINE. OCT. 22, 1974.
D.236,544.—MICROFORM VIEWER. AUG. 26, 1975.
D.239,055.—HAND-HELD VIEWER FOR MICROFORMS. MAR. 2, 1976.
D.239,056.—HAND-HELD VIEWER FOR MICROFORMS. MAR. 2, 1976.
D.247,295.—MULTICOLOR TRANSPARENCY REPRODUC-TION MACHINE. FEB. 21, 1978.

Class 26G

D.225,643.—REACTION TESTING DEVICE. DEC. 26, 1972.
D.225,681.—SUCTION MOUNTING DEVICE. DEC. 26, 1972.
D.226,662.—EDUCATIONAL DEVICE FOR DEMONSTRATING MOMENTUM. APR. 10, 1973.
D.232,030.—EDUCATIONAL AID FOR DEMONSTRATING PRINCIPLES IN PHYSICS. JULY 9, 1974.
D.232,031.—COLLISION DEMONSTRATION TEACHING AID. JULY 9, 1974.
D.232,098.—TEACHING AID FOR DEMONSTRATING PRINCIPLES IN PHYSICS. JULY 16, 1974.
D.232,698.—CLAMP. SEPT. 10, 1974.
D.233,432.—TEACHING AID FOR DEMONSTRATING PRINCIPLES OF PHYSICS. OCT. 29, 1974.
D.233,654.—CONTAINER FOR BOOKLETS OR THE LIKE. NOV. 19, 1974.
D.233,658.—BALANCE SCALE. NOV. 19, 1974.
D.233,935.—EDUCATIONAL DEVICE FOR TEACHING ARITHMETIC. DEC. 17, 1974.
D.234,546.—CARRYINO CASE. MAR. 18, 1975.
D.235,440.—EDUCATIONAL PLUG-IN BOARD. JUNE 17, 1975.
D.235,441.—BASIC MEASUREMENT EDUCATIONAL BOARD. JUNE 17, 1975.
D.236,028.—MAGNIFIER. JULY 22, 1975.
D.236,729.—EDUCATIONAL PLUG-ON BOARD. SEPT. 9, 1975.
D.236,730.—EDUCATIONAL PLUG-ON BOARD. SEPT. 9, 1975.
D.236,978.—SWITCHING EDUCATIONAL BOARD. SEPT. 30, 1975.
D.236,979.—EDUCATIONAL MEASURING DEVICE BOARD. SEPT. 30, 1975.
D.237,020.—COMBINED SUPPORT AND STORAGE TRAY FOR AN EDUCATIONAL KIT OR SIMILAR ARTICLE. SEPT. 30, 1975.
D.237,877.—MOTOR AND GENERATOR EDUCATIONAL BOARD. DEC. 2, 1975.
D.237,878.—MULTI-METER EDUCATIONAL BOARD. DEC. 2, 1975.
D.237,879.—EDUCATIONAL DEVICE FOR LEARNING MAGNETISM & INDUCTION. DEC. 2, 1975.
D.237,880.—EDUCATIONAL DEVICE FOR LEARNING BASIC HAND TOOLS. DEC. 2, 1975.
D.242,787.—AN EDUCATIONAL AIDE FOR MEASURING MASS. DEC. 21, 1976.
D.242,793.—EDUCATIONAL AIDE FOR TEACHING PHYSICAL PROPERTIES OF LIGHT. DEC. 21, 1976.

Class 26G 1

D.216,157.—BALANCE SCALE. NOV. 25, 1969. BEL. 0016761, CAN. 0032611, GER. DES5718, GRB. 0942720, ITL. 0138772, JAP. 0337548.
D.236,731.—CURCUIT TESTING EDUCATIONAL BOARD. SEPT. 9, 1975.

Class 26H

D.236,556.—CARRYING CASE FOR COLORISTS MATERIALS OR THE LIKE. AUG. 26, 1975.

Class 26H 1

D.215,294.—HOUSING FOR ELECTRONIC APPARATUS. SEPT. 23, 1969. ARG. 0011066, BEL. 0016760, GER. 0005765, GRB. 0942725, ITL. 0138776, MEX. 0010934, PNM. 0001839, VZL. 0000664.
D.215,660.—HOUSING FOR ELECTRONIC APPARATUS. OCT. 21, 1969.
D.234,700.—DISC DRIVE CABINET. APR. 1, 1975.
D.238,494.—CONTROL PANEL FOR DISK FILE. JAN. 20, 1976.
D.238,495.—DISK MEMORY MODULE FRONT PANEL. JAN. 20, 1976.
D.240,632.—CABINET FOR ELECTRONIC EQUIPMENT. JULY 20, 1976.
D.241,446.—SINGLE MAGNETIC CARD CONSOLE UNIT FOR ELECTRONIC TYPING SYSTEM. SEPT. 14, 1976.
D.241,447.—SINGLE MAGNETIC TAPE CONSOLE UNIT FOR ELECTRONIC TYPING SYSTEM. SEPT. 14, 1976.
D.241,448.—DUAL MAGNETIC TAPE CONSOLE UNIT FOR ELECTRONIC TYPING SYSTEM. SEPT. 14, 1976.
D.241,449.—DUAL MAGNETIC CARD CONSOLE UNIT FOR ELECTRONIC TYPING SYSTEM. SEPT. 14, 1976.
D.254,492.—DUAL MAGNETIC DISC-CONSOLE UNIT FOR ELECTRONIC TYPING SYSTEM. MAR. 18, 1980.

Class 26H 2

D.221,228.—KEYBOARD FOR A COMPUTER OR THE LIKE. JULY 20, 1971.

Class 26H 3

D.221,229.—SEND/RECEIVE DATA PRINTER TERMINAL. JULY 20, 1971.
D.224,019.—XEND/RECEIVE DATA PRINTER TERMINAL. JUNE 27, 1972.
D.236,129.—INPUT/OUTPUT TERMINAL. JULY 29, 1975.

Class 26H 4

D.212,692.—TELEPHONE ACOUSTIC COUPLER. NOV. 12, 1968. ARG. 0010245, BEL. 0016601, CAN. 2503147, FRA. 0096593. GER. 0005410, GRB. 0939331, ITL. 1341991, MEX. 0010845.
D.224,025.—ACOUSTIC COUPLER. JUNE 27, 1972.

Class 26H 5

D.204,319.—HOLLOW CORNER PRISM. APR. 5, 1966.
D.206,956.—HOLLOW CORNER PRISM. FEB. 14, 1967.
D.237,849.—COOLING RACK. DEC. 2, 1975.

Class 26H 6

D.221,108.—PAPER SHREDDER. JULY 6, 1971. CAN. 0033939.

Class 26H 7

D.221,901.—OVERHEAD PROJECTOR. SEPT. 14, 1971. CAN. 0033920.
D.231,800.—RIBBON CARTRIDGE. JUNE 11, 1974.
D.236,787.—BOOKCASE OR SIMILAR ARTICLE. SEPT. 16, 1975.
D.239,419.—TAPE CASSETTE STORAGE UNIT. MAR. 30, 1976.
D.239,472.—MAGNETIC CARD STORAGE TRAY. APR. 6, 1976.
D.239,531.—COPY HOLDER. APR. 13, 1976.
D.239,872.—CAMERA/PROJECTOR. MAY 11, 1976.
D.241,774.—PRINTER/KEYBOARD APPARATUS FOR ELECTRONIC TYPING SYSTEM OR SIMILAR ARTICLE. OCT. 5, 1976.
D.242,101.—FILE UNIT OR SIMILAR ARTICLE. NOV. 2, 1976.
D.242,102.—TABLE OR SIMILAR ARTICLE. NOV. 2, 1976.
D256,976.—HOLDER FOR PRINTED WIRING BOARDS OR THE LIKE. SEPT. 23, 1980.

Class 27A

3,615,614.—LIGHT DEV DIRCT PRINT SILVER HALIDE EMULSION SENSITIZD W/ COMBINTN OF COPPER, LEAD, BROMIDE AND THIOU. OCT. 26, 1971.
3,660,100.—DIRECT-PRINT LIGHT DEVELOPABLE EMULSION. MAY 2, 1972.
3,725,073.—LIGHT DEVELOPABLE DIRECT WRITING, SILVER HALIDE EMULSIONS CONTAINING GOLD, IODINE, LEAD AND COP. APR. 3, 1973. CAN. 0882613.
3,782,960.—DRCT-PRNT LIGHT-DVLPBL EMULSN CNTAING SILVER HALIDE GRAINS SNSTZD SENSTZD ON THE SURFACES W/SI. JAN. 1, 1974. BEL. 0780680, CAN. 0994590, GRB. 1384081, ITL. 0950280.
3,849,146.—DIRECT-PRINT LIGHT-DEVELOPBL SILVER HALIDE EMULSION CONTAINING CYCLIC DIOXIDE OR SELENONE AS SEN. NOV. 19, 1974.

Class 27B

3,631,232.—APPARATUS FOR SIMULATING THE ELECTRICAL CHARACTERISTICS OF A NETWORK. DEC. 28, 1971. CAN. 0951429, GRB. 1267785.
4,125,318.—TIR MODULATOR. NOV. 14, 1978.

Class 27C

3,736,133.—TRANSPARENT INK—ABSORBENT LACQUERS. MAY 29, 1973. ARG. 0193996, CAN. 0985583, GRB. 1390137, MEX. 0127276, VZL. 0033577.
3,773,513.—DIMENSIONALLY STABLE PHOTOGRAPHIC PAPER CONTAINING GLASS FIBERS. NOV. 20, 1973.

Class 27D

3,393,362.—PROCESS FOR DETECTING IRREGULARITIES IN A METALLIC SURFACE. JULY 16, 1968.

Class 27H 1

4,077,019.—TRANSVERSE MODE CONTROL IN DOUBLE-HETEROSTRUCTURE LASERS UTILIZING SUBSTRATE LOSS. FEB. 28, 1978.

Class 30

3,861,911.—IMAGING FIXING METHOD. JAN. 21, 1975.

Class 30A

3,573,904.—COMBINATION OF ELECTROGRAPHY AND MANIFOLD IMAGING. APR. 6, 1971. ARG. 0188621, AUS. 0408972, BEL. 0708975, CAN. 0883746, FRA. 1563782, GER. 1671591, GRB. 1215957, ITL. 0822303, JAP. 0620886, MEX. 0100810, VZL. 0023682.
3,707,368.—MANIFOLD IMAGING PROCESS. DEC. 26, 1972.
3,741,762.—MANIFOLD IMAGING MEMBER AND PROCESS. JUNE 26, 1973. CAN. 0961909, GRB. 1376391.
3,955,975.—MANIFOLD IMAGING MEMBER AND PROCESS EMPLOYING A METAL SOAP. MAY 11, 1976.

Class 30B

3,642,363.—MANIFOLD IMAGING SYSTEM. FEB. 15, 1972. CAN. 0960289, GRB. 1328405, JAP. 0770137.
3,661,454.—COMBINATION OF ELECTROGRAPHY AND MANIFOLD IMAGING. MAY 9, 1972.
3,684,362.—TRANSPARENT ELECTRODE. AUG. 15, 1972. CAN. 0932378, GRB. 1340685, JAP. 0758465.
3,741,641.—MANIFOLD IMAGING APPARATUS. JUNE 26, 1973.
3,748,034.—MANIFOLD IMAGING MACHINE. JULY 24, 1973. BEL. 0777713, CAN. 0948694, FRA. 7200999, GRB. 1376661, ITL. 0946353, SPN. 0398585, SWD. 7200573.
3,761,174.—MANIFOLD WEB HANDLING. SEPT. 25, 1973.
3,768,902.—MANIFOLD IMAGING. OCT. 30, 1973.
3,876,937.—LAYER TRANSFER IMAGING SYSTEM. APR. 8, 1975. CAN. 0933996, GRB. 1282725, JAP. 0726369.
3,963,340.—IMAGING APPARATUS. JUNE 15, 1976.
4,103,995.—IMAGING APPARATUS. AUG. 1, 1978.

Class 30C

3,615,393.—MANIFOLD IMAGING PROCESS EMPLOYING STATIC CHARGE FIELD APPLICATION. OCT. 26, 1971. BEL. 0746582, CAN. 0965829, FRA. 7007627, GRB. 1295533, ITL. 0886478, JAP. 0727962.
3,653,892.—MANIFOLD IMAGING PROCESS WHEREIN THE IMAGED ELEMENTS MAY BE RECOMBINED AND REUSED. APR. 4, 1972. CAN. 0916967, GRB. 1320407, JAP. 0731611.
3,676,116.—IMAGE REVERSAL IN MANIFOLD IMAGING USING ELECTRICALLY CONDUCTIVE RECEIVER SHEET. JULY 11, 1972.
3,684,362.—TRANSPARENT ELECTRODE. AUG. 15. 1972. CAN. 0932378. GRB. 1340685, JAP. 0758465.
3,692,516.—MANIFOLD IMAGING METHOD - PHAROS MANIFOLD IMAGING REVERSAL. AUG. 19, 1972. CAN. 0929204, GRB. 1320012, JAP. 0759476.
3,692,518.—MANIFOLD IMAGING PROCESS. SEPT. 19, 1972. ARG. 0191965, BEL. 0749174, CAN. 0916496, FRA. 7013872, GRB. 1309649, ITL. 0899700, JAP. 0731228, MEX. 0116175.
3,718,462.—MANIFOLD ELECTRIFICATION PROCESS. FEB. 27, 1973. CAN. 0947366, GRB. 1313712, JAP. 0739530.
3,737,311.—ELECTROSTATIC PARTICLES TRANSFER IMAGING PROCESS. JUNE 5, 1973.
3,756,812.—MANIFOLD IMAGING PROCESS. SEPT. 4, 1973.
3,761,258.—IMAGING PROCESS EMPLOYING CHARGED DONOR AND RECEIVER SHEETS. SEPT. 25, 1973.
3,776,721.—MANIFOLD IMAGING. DEC. 4, 1973.
3,844,780.—IMAGING PROCESS. OCT. 29, 1974.
3,846,127.—IMAGING SYSTEM. NOV. 5, 1974.
3,850,626.—IMAGING MEMBER AND METHOD. NOV. 26, 1974. GRB. 1464653.
3,854,943.—MANIFOLD IMAGING METH AND MEMBR EMPLOYING FUNDAMENTAL PARTICLES OF ALPHA METAL FREE PHTHALOCYANINE. DEC. 17, 1974. CAN. 0988766, GRB. 1424234.
3,861,910.—MANIFOLD IMAGING PROCESS. JAN. 21, 1975. ARG. 0198477, BEL. 0744343, CAN. 0947363, FRA. 7001127, GRB. 1284521, ITL. 0885940, JAP. 0727960, MEX. 0111440.
3,909,257.—MANIFOLD IMAGING PROCESS WITH SPOOL ELECTRODE. SEPT. 30, 1975.

Class 30D

3,598,581.—MANIFOLD IMAGING METHOD. AUG. 10, 1971. ARG. 0198157, AUS. 0413154, BEL. 0713100, BRA. 6795099, CAN. 0889250, CHL. 0024249, CLB. 0017928, FRA. 1560020, GER. 1772114, GRB. 1200712, HOL. 0149611, ITL. 0829693, JAP. 0626106, LXB. 0055806, MEX. 0100797, NOR. 0128040, PRU. 0009737, SPN. 0352316, STZ. 0474097, SWD. 0340404, URG. 0009203, VZL. 0023690.
3,723,112.—MANIFOLD IMAGING METHOD WHEREIN THE ACTIVATOR CARRIES A PLASTIC COATING MATERIAL. MAR. 27, 1973.
3,741,762.—MANIFOLD IMAGING MEMBER AND PROCESS. JUNE 26, 1973. CAN. 0961909, GRB. 1376391.
3,907,558.—MANIFOLD IMAGING UTILIZING SILICA GEL ACTIVATING LAYER. SEPT. 23, 1975.
3,912,504.—MANIFOLD IMAGING WITH THERMAL ACTIVATOR CONTAINED IN A SILICA GEL LAYER. OCT. 14, 1975.
3,955,975.—MANIFOLD IMAGING MEMBER AND PROCESS EMPLOYING A METAL SOAP. MAY 11, 1976.
3,964,904.—MANIFOLD IMAGING MEMBER AND PROCESS EMPLOYING A DARK CHARGE INJECTING LAYER. JUNE 22, 1976. BEL. 0832405.

4,015,983.—A METHOD OF ERASING MANIFOLD IMAGES. APR. 5, 1977.
4,108,655.—METHOD OF MAKING A THERMO ACTIVE IMAGING MEMBER. AUG. 22, 1978.

Class 30E

3,653,889.—METHOD OF FIXING MANIFOLD IMAGES. APR. 4, 1972. BEL. 0754024, CAN. 0921745, FRA. 7028279, GRB. 1322772, ITL. 0900939, JAP. 0739529.
3,658,519.—IMAGE TRANSFER PROCESS FROM CONDUCTIVE SUBSTRATES. APR. 25, 1972. ARG. 0195536, AUS. 0456406, BEL. 0760747, BRA. 7022093, CAN. 0960290, FRA. 7047144, GRB. 1337590, ITL. 0913848, MEX. 0119590, SWD. 7017293.
3,706,553.—TRANSFER OF IMAGES TO A NON-CONDUCTIVE SUBSTRATE. DEC. 19, 1972. ARG. 0203811, AUS. 0461437, BEL. 0760456, CAN. 0947368, FRA. 7047140, GRB. 1339577, ITL. 0913634, MEX. 0119591, SWD. 7017139.
3,708,288.—IMAGE TRANSFER PROCESS. JAN. 2, 1973. CAN. 0882053, GRB. 1298922, JAP. 0757867.
3,723,112.—MANIFOLD IMAGING METHOD WHEREIN THE ACTIVATOR CARRIES A PLASTIC COATING MATERIAL. MAR. 27, 1973.
3,746,538.—IMAGE TRANSFER PROCESS. JULY 17, 1973. CAN. 0951781, GRB. 1374841.
3,793,017.—IMAGING FIXING METHOD. FEB. 19, 1974.
3,819,368.—MANIFOLD IMAGING MEMBER EMPLOYING A FIXATIVE LAYER. JUNE 25, 1974.
3,825,423.—IMAGE TRANSFER PROCESS. JULY 23, 1974.
3,888,208.—IMAGE TRANSFER PROCESS. JUNE 10, 1975.

Class 30F

3,548,748.—DUPLICATING METHOD EMPLOYING SIMULTANEOUS APPLICATION OF ELECTRIC FIELD AND EXPOSURE TO RADIATION. DEC. 22, 1970. CAN. 0882051, GRB. 1227394, JAP. 0752522.
3,554,125.—METHOD OF MAKING A LITHOGRAPHIC MASTER AND METHOD OF PRINTING THEREWITH. JAN. 12, 1971. CAN. 0882052, GER. 1772302, GRB. 1219849.
3,565,612.—DUPLICATING MASTERS BY THE MANIFOLD PROCESS. FEB. 23, 1971. ARG. 0193797, AUS. 0411612, BEL. 0708974, CAN. 0873277, FRA. 1549964, GER. 1671590, GRB. 1215956, ITL. 0823464, MEX. 0106608, VZL. 0023681.
3,573,904.—COMBINATION OF ELECTROGRAPHY AND MANIFOLD IMAGING. APR. 6, 1971. ARG. 0188621, AUS. 0408972, BEL. 0708975, CAN. 0883746, FRA. 1563782, GER. 1671591, GRB. 1215957, ITL. 0822303, JAP. 0620886, MEX. 0100810, VZL. 0023682.

Class 30G

3,655,372.—IMAGE REVERSAL IN MANIFOLD IMAGING. APR. 11, 1972.
3,901,697.—MANIFOLD IMAGING PROCESSUSING ELECTRONICS PHOTOSENSITIVE MATERIAL SUBJECT TO LIGHT FATIGUE. AUG. 26, 1975.

Class 30H

3,649,117.—IMAGING PROCESS. MAR. 14, 1972. BEL. 0761133, CAN. 0985732, FRA. 7047700, GRB. 1340679, ITL. 0914070, JAP. 0759480.
3,918,967.—CONTACT REFLEX MANIFOLD IMAGING PROCESS. NOV. 11, 1975. ARG. 0183676, BEL. 0761132, CAN. 0949120, FRA. 7047699, GRB. 1340207, ITL. 0914069, JAP. 0770143, MEX. 0119757, VZL. 0032600.

Class 30I

3,556,783.—COLOR MANIFOLD IMAGING PROCESS. JAN. 19, 1971.
3,853,555.—METHOD OF COLOR IMAGING A LAYER OF ELECTRICALLY PHOTOSENSITIVE AGGLOMERATES. DEC. 10, 1974.
3,854,943.—MANIFOLD IMAGING METH AND MEMBR EMPLOYING FUNDAMENTAL PARTICLES OF ALPHA METAL FREE PHTHALOCYANINE. DEC. 17, 1974. CAN. 0988766, GRB. 1424234.

Class 31

3,719,951.—WRAP ADJUST DEVICE FOR CONTROLLING ENGAGEMENT BETWEEN A WEB AND ROLLER IN AN IMAGING SYSTEM. MAR. 6, 1973. CAN. 0995295, GRB. 1406047.
4,078,923.—MIGRATION IMAGING WITH SURFACTANT-MODIFIED SOLVENT DEVELOPMENT. MAR. 14, 1978.
4,123,283.—SETTING ELECTRICAL LATENT IMAGES IN MIGRATION IMAGING ELEMENTS. OCT. 31, 1978. AUS. 482769. BEL. 813501. CAN. 1037546. FRA. 7412476. GRB. 1471385. ITL. 1009714. MEX. 136227.
4,135,926.—MIGRATION IMAGING PROCESS IN WHICH LATENT IMAGE IS SET. JAN. 23, 1979. AUS. 482769. BEL. 813501. CAN. 1037546. FRA. 7412476. GRB. 1471385. ITL. 1009714. MEX. 136227.

Class 31A

3,520,681.—PHOTOELECTROSOLOGRAPHY. JULY 14, 1970. BRA. 0084241, CAN. 0852692, MEX. 0085656.
3,801,314.—IMAGING SYSTEM. APR. 2, 1974.
3,975,195.—MIGRATION IMAGING SYSTEM. AUG. 17, 1976.
4,009,028.—REVERSE MIGRATION IMAGING SYSTEM. FEB. 22, 1977. BEL. 0827065.
4,013,462.—MIGRATION IMAGING SYSTEM. MAR. 22, 1977.
4,040,826.—IMAGING SYSTEM OF MIGRATION MATERIAL IN SOFTENABLE LAYER. AUG. 2, 1977.
4,062,680.—IMAGING PROCESS EMPLOYING ELECTRICAL OR MAGNETIC REVERSE MIGRATION FORCE AND SOFTENABLE MAT. DEC. 13, 1977. BEL. 827065, FRA. 7509299, GRB. 1497825.
4,157,259.—ERASURE IN MIGRATION IMAGING SYSTEM. JUNE 5, 1979. BEL. 827065. ORB. 1497825.

Class 31B

3,528,355.—CAMERA-PROCESSOR.. SEPT. 15, 1970. ARG. 0184627, ATR. 0303513, AUS. 0426557, BEL. 0720022, BRA. 6800654, CAN. 0864811, CHL. 0024251, CLB. 0018453, FRA. 1586179, GER. 1797177, GRB. 1244641, IND. 0117458, ITL. 0839895, LXB. 0056774, MEX. 0103737, NOR. 0128296, NZL. 0153587, PLP. 0006313, PNM. 0001980, PRU. 0010212, PTG. 0050229, SPN. 0357651, STZ. 0516171, SWD. 0338503, URG. 0009309, VZL. 0023698.
3,542,465.—CAMERA WITH DEVELOPMENT MEANS. NOV. 24, 1970. CAN. 0918739, GRB. 1241846, JAP. 0650672.
3,719,951.—WRAP ADJUST DEVICE FOR CONTROLLING ENGAGEMENT BETWEEN A WEB AND ROLLER IN AN IMAGING SYSTEM. MAR. 6, 1973. CAN. 0995295, GRB. 1406047.
3,770,554.—APPARATUS FOR SPLITTING A SOFTENABLE FILM COMPRISING BITE ROLLERS. NOV. 6, 1973.
3,878,816.—IMAGING SYSTEM. APR. 22, 1975.
3,910,475.—SYSTEM FOR ELECTRICALLY GROUNDING OR BIASING A MEMBER. OCT. 7, 1975. FRA. 7404995, ITL. 1007663.
3,951,324.—CAMERA/PROCESSOR/PROJECTOR & SUBSYSTEMS. APR. 20, 1976. FRA. 7439865.
4,025,183.—CAMERA/PROCESSOR/PROJECTOR & SUBSYSTEMS. MAY. 24, 1977. FRA. 7439865.
4,278,335.—CAMERA WITH DEVELOPMENT AND VIEWING MEANS. JULY 14, 1981.

Class 31C

3,556,781.—MIGRATION IMAGING PROCESS. JAN. 19, 1971. ARG. 0175887, AUS. 0425096, BEL. 0722718, CAN. 0874909, CHL. 0024333, FRA. 1587222, GER. 1804475, GRB. 1250526, GUA. 0002124, ITL. 0855511, MEX. 0103409, PNM. 0001949, PRU. 0010349, SPN. 0359501, STZ. 0506818, SWD. 0340750, URG. 0009365, VZL. 0023713.
3,615,400.—MIGRATION IMAGING SYSTEM EMPLOYING CARBON LAYER BETWEEN SOLVENT SOLUBLE LAYR AND CONDUCTIVE LAYER. OCT. 26, 1971. ATR. 0306509, AUS. 0433959, BEL. 0726279, CAN. 0874906, DNK. 0129015, FRA. 1598889, GRB. 1261360, ITL. 0850165, LXB. 0057703, NOR. 0127265, NZL. 0154928, SAF. 0688514, SPN. 0380191, STZ. 0512755, SWD. 7210413.
3,653,885.—PROCESS OF STABILIZING A MIGRATION IMAGE COMPRISING SELENIUM PARTICLES. APR. 4, 1972. CAN. 0937437.
3,656,990.—ELECTROSOLOGRAPHY. APR. 18, 1972. ARG. 0152723, BRA. 0084169, CAN. 0800550, CHL. 0025766, CLB. 0014944, MEX. 0086246, PNM. 0002518, PRU. 0009465, URG. 0008153, VZL. 0023999.
3,664,834.—MIGRATION IMAGING METHOD EMPLOYING ADHESIVE TRANSFER MEMBER. MAY 23, 1972. CAN. 0890353, GER. 1964201, GRB. 1291848, JAP. 0726370.
3,713,818.—MIGRATION IMAGING SYSTEM WITH MOLTEN LIQUID DEVELOPMENT. JAN. 30, 1973. CAN. 0933580, GRB. 1358566, USR. 0463275.

3,719,482.—IMAGING SYSTEM. MAR. 6, 1973.
3,720,513.—MIGRATION IMAGING METHOD INVOLVING SOLVENT WASH-AWAY OF UNMIGRATED PARTICLES. MAR. 13, 1973.
3,723,113.—POLYCHROMATIC ELECTROSOLOGRAPHIC. MAR. 27, 1973.
3,740,216.—PHOTOELECTROCOLOGRAPHIC IMAOING EMPLOYING A RELEASABLE IMAGING LAYER. JUNE 19, 1973.
3,741,757.—MIORATION IMAGE DEVELOPMENT BY SPLITTING OR ABRADING SOFTENABLE LAYER. JUNE 26, 1973. ATR. 0306510, AUS. 0441768, BEL. 0743209, CAN. 0915960, FRA. 6943268, GER. 1961754, GRB. 1297129, ITL. 0879120, JAP. 0725058, PNM. 0001554, SPN. 0374618, SWD. 0358750, VZL. 0032779.
3,753,706.—PHOTOELECTROSOLOGRAPHIC IMAGING METHOD WHEREIN AN ABSORBENT MATERIAL IS USED. AUG. 21, 1973. CAN. 0945796, GRB. 1334141, JAP. 0766711.
3,791,822.—REMOVAL OF BACKGROUND FROM AN IMAGED MIGRATION LAYER. FEB. 12, 1974. ATR. 0306510, AUS. 0441768, BEL. 0743209, CAN. 0915960, FRA. 6943268, GER. 1961754, GRB. 1297129, ITL. 0879120, JAP. 0725058, PNM. 0001554, SPN. 0374618, SWD. 0358750, VZL. 0032779.
3,795,512.—IMAGING SYSTEM. MAR. 5, 1974. ARG. 0188187, ATR. 0301340, AUS. 0429441, BEL. 0725617, BRA. 0068091, CAN. 0883747, DNK. 0131212, FRA. 1599277, GER. 1815217, GRB. 1257189, ITL. 0849328, JAP. 0686721, LXB. 0057585, MEX. 0101986, NOR. 0128084, NZL. 0154842, PTG. 0050858, SAF. 0688365, SPN. 0361650, STZ. 0523523, SWD. 0341128, VZL. 0023715.
3,798,030.—PHOTOELECTROSOLOGRAPHIC IMAGING METHOD UTILIZING POWDER PARTICLES. MAR. 19, 1974.
3,820,984.—PHOTOELECTROSOLOGRAPHIC IMAGING METHOD USING FUSIBLE PARTICLES. JUNE 28, 1974.
3,836,362.—IMAGING METHOD. SEPT. 17, 1974.
3,839,030.—MIGRATION IMAGING PROCESS WITH UNIFORM EXPOSURE BEFORE OR DURING THE SOFTENING STEP. OCT. 1, 1974. BEL. 0715790. CAN. 0890853, FRA. 1572571, GER. 1772523, GRB. 1234652, ITL. 0834777, JAP. 0620888.
3,839,031.—ELECTRODE DEVELOPMENT MIGRATION IMAGING METHOD. OCT. 1, 1974. ARG. 0184241, AUS. 0456843, BEL. 0755599, CAN. 0947367, FRA. 7032000, GRB. 1326950, ITL. 0907387, JAP. 0766709, MEX. 0120156, SPN. 0383314, SWD. 0369115.
3,840,397.—PARTICLE PLACING SYSTEM. OCT. 8, 1974. ARG. 0175888, ATR. 0300561, AUS. 0427473, BEL. 0724135, CAN. 0868305, DNK. 0126727, FRA. 1593258, GER. 1810079, GRB. 1254448, ITL. 0948025, JAP. 0708364, LXB. 0057367, MEX. 0107468, NOR. 0127216, NZL. 0154542, PNM. 0002048, PTG. 0050687, SAF. 0687633, SPN. 0360458, STZ. 0501251, SWD. 0341724, VZL. 0023710.
3,866,236.—IMAGING PROCESS USING VERTICAL PARTICLE MIGRATION. FEB. 11, 1975. CAN. 0936735, GRB. 1360623.
3,873,309.—IMAGING METHOD USING MIGRATION MATERIAL. MAR. 25, 1975. CAN. 978008, GRB. 1357143.
3,878,816.—IMAGING SYSTEM. APR. 22, 1975.
3,894,869.—A POLYCHROMATIC MIGRATION IMAGING SYSTEM. JULY 15, 1975.
3,901,699.—MIGRATION AND AGGLOMERATION IMAGING METHOD. AUG. 26, 1975.
3,910,475.—SYSTEM FOR ELECTRICALLY GROUNDING OR BIASING A MEMBER. OCT. 7, 1975. FRA. 7404995, ITL. 1007663.
3,912,505.—COLOR IMAGING METHOD EMPLOYING A MONOLAYER OF BEADS. OCT. 14, 1975. ARG. 0179561, AUS. 0426600, BEL. 0723097, CAN. 0890354, CHL. 0024276, FRA. 1587252, GRB. 1248744, GUA. 0002327, HOL. 0151526, ITL. 0845607, JAP. 0731223, MEX. 0107801, PNM. 0001814, PRU. 0010425, SPN. 0377583, STZ. 0526138, SWD. 0351501, URG. 0009366, VZL. 0023708.
3,917,880.—ELECTROPHOTETIC IMAGING SYSTEM. NOV. 4, 1975. GRB. 1459468.
3,918,969.—MIGRATION IMAGING METHOD EMPLOYING A UNIFORM EXPOSURE STEP. NOV. 11, 1975. ARG. 0172557, ATR. 0300565, AUS. 0430615, BEL. 0726282, CAN. 0883748, DNK. 0124046, FRA. 1598888, GER. 1817222, GRB. 1257030, ITL. 0850166, JAP. 0665999, LXB. 0057692, MEX. 0107941, NOR. 0127264, NZL. 0154930. PNM. 0001958, SAF. 0688516, SPN. 0362041, STZ. 0506822, SWD. 0340953, VZL. 0023721.
3,933,491.—IMAGING SYSTEM. JAN. 20, 1976.
3,950,167.—IMAGING SYSTEM. APR. 13, 1976. FRA. 7432507.
3,960,555.—PROCESS-PESO WITH CONDUCTORLESS BASE. JUNE 1, 1976. BEL. 0713103, BRA. 0088021, CAN. 0890858, CHL. 0023981, FRA. 1576403, IND. 0115236, ITL. 0829694, LXB. 0055807, MEX. 0096676, PRU. 0009941, SAF. 68/2105, SPN. 0352317, URG. 0009135, VZL. 0023691.
3,966,465.—MULTIPLE LAYER MIGRATION IMAGING SYSTEM. JUNE 29, 1976. BEL. 0773383, CAN. 0960286, FRA. 7135575, GRB. 1370146, ITL. 0938874.
3,967,959.—MIGRATION IMAGING SYSTEM. JULY 6, 1976.
3,970,453.—IMAGING BY SELECTIVE STRIPPING OUT AREAS OF LAYER. JULY 20, 1976.
3,975,739.—MIGRATION IMAGING SYSTEM USING SHAPED ELECTRODE. AUGUST 17, 1976.
3,976,483.—FRASING PROCESS - XDM LATENT IMAGE ERASING. AUG. 24, 1976. ARG. 0184682, AUS. 0458164, BEL. 0761130, CAN. 0946911, FRA. 7047697, GRB. 1339715, ITL. 0914071, JAP. 0770138, MEX. 0119758, VZL. 0032932.
3,979,210.—MIGRATION IMAGING MEMBER EMPLOYING A SURFACE SKIN. SEPT. 7, 1976.
3,982,936.—DEFORMATION IMAGING SYSTEM. SEPT. 28, 1976.
3,982,939.—MULTIPLE LAYER MIGRATION IMAGING SYSTEM. SEPT. 28, 1976. BEL. 0773383, CAN. 0946672, FRA. 7135575, GRB. 1370146, ITL. 0938874.
3,985,560.—IMAGING SYSTEM. OCT. 12, 1976.
4,007,042.—MIGRATION IMAGING METHOD. FEB. 8, 1977.
4,012,250.—IMAGING SYSTEM-MIGRATION IMAGE CONVERSION BY DYE TRANSFER. MAR. 15, 1977. CAN. 0972208, ORB. 1341405, JAP. 0770142.
4,014,695.—IMAGING SYSTEM. MAR. 29, 1977.
4,021,110.—PHOTOCOPYING CAMERA AND PROCESSING DEVICE. MAY 3, 1977.
4,028,101.—MIGRATION IMAGING MEMBER EMPLOYING A SURFACE SKIN. JUNE 7, 1977.
4,055,418.—MIGRATION IMAGING METHOD USING AN IMAGING MEMBER EMPLOYING A SURFACE SKIN. OCT. 25, 1977.
4,081,273.—MIGRATION IMAGING METHOD. MAR. 28, 1978.
4,084,966.—IMAGING SYSTEM USING AGGLOMERABLE MIGRATION MARKING MATERIAL. APR. 18, 1978.
4,101,321.—IMAGING SYSTEM. JULY 18, 1978.
4,123,283.—SETTING ELECTRICAL LATENT IMAGES IN MIGRATION IMAGING ELEMENTS. OCT. 31, 1978. AUS. 482769. BEL. 813501. CAN. 1037546. FRA. 7412476. GRB. 1471385. ITL. 1009714. MEX. 136227.
4,135,926.—MIGRATION IMAGING PROCESS IN WHICH LATENT IMAGE IS SET. JAN. 23, 1979. AUS. 482769. BEL. 813501. CAN. 1037546. FRA. 7412476. GRB. 1471385. ITL. 1009714. MEX. 136227.
4,230,782.—MIGRATION IMAGING SYSTEM WITH MENISCUS DEVELOPMENT. OCT. 28, 1980. ARG. 186615, ATR. 347242, BEL. 774562, BRA. PI7107203, CAN. 951365, FRA. 7139635, GRB. 1371768, ITL. 937630, MEX. 124984, PNM. 2601, SPN. 396442, SWD. 7113500, VZL. 32935.
4,241,156.—IMAGING SYSTEM OF DISCONTINUOUS LAYER OF MIGRATION MATERIAL. DEC. 23, 1980.
4,252,890.—IMAGING SYSTEM. FEB. 24, 1981.
4,281,050.—MIGRATION IMAGING SYSTEM. JUL. 28, 1981

Class 31D

3,573,906.—ELECTROPHOTOGRAPHIC PLATE AND PROCESS. APR. 6, 1971. ARG. 0177890, AUS. 0441534, BEL. 0725173, BRA. 0088092, CAN. 0906801, CZC. 0157053, FRA. 1594981, GRB. 1217726, ITL. 0852743, MEX. 0106441, SPN. 0379204, SWD. 0335063, USR. 0448658. VZL. 0029780.
3,615,400.—MIGRATION IMAGING SYSTEM EMPLOYING CARBON LAYER BETWEEN SOLVENT SOLUBLE LAYER AND CONDUCTIVE LAYER. OCT. 26, 1971. ATR. 0306509, AUS. 0433959, BEL. 0726279, CAN. 0874906, DNK. 0129015, FRA. 1598889, GRB. 1261360, ITL. 0850165, LXB. 0057703, NOR. 0127265, NZL. 0154928, SAF. 0688514, SPN. 0380191, STZ. 0512755, SWD. 7210413.
3,740,216.—PHOTOELECTROCOLOGRAPHIC IMAGING EMPLOYING A RELEASABLE IMAGING LAYER. JUNE 19, 1973.
3,740,223.—MIGRATION IMAGING STRUCTURE. JUNE 19, 1973. BRA. 6897135, CAN. 0855151, MEX. 0100800, PNM. 0002192, PRU. 0009484, VZL. 0032425.
3,753,706.—PHOTOELECTROSOLOGRAPHIC IMAGING METHOD WHEREIN AN ABSORBENT MATERIAL IS USED. AUG. 21, 1973. CAN. 0945796, GRB. 1334141, JAP. 0766711.
3,801,314.—IMAGING SYSTEM. APR. 2, 1974.

3,820,984.—PHOTOELECTROSOLOGRAPHIC IMAGING METHOD USING FUSIBLE PARTICLES. JUNE 28, 1974.
3,836,364.—PHOTOELECTROSOLOGRAPHIC PROCESS FOR MAKING MULTIPLE IMAGES. SEPT. 17, 1974. CAN. 0914519, GRB. 1344482, JAP. 0770140.
3,839,031.—ELECTRODE DEVELOPMENT MIGRATION IMAGING METHOD. OCT. 1, 1974. ARG. 0184241, AUS. 0456843. BEL. 0755599, CAN. 0947367, FRA. 7032000, GRB. 1326950, ITL. 0907387, JAP. 0766709, MEX. 0120156, SPN. 0383314, SWD. 0369115.
3,873,309.—IMAGING METHOD USING MIGRATION MATERIAL. MAR. 25, 1975. CAN. 978008, GRB. 1357143.
3,901,702.—MIGRATION IMAGING ELEMENT WITH ABSORBENT BLOTTER OVERLAYER. AUG. 26, 1975. CAN. 0945796, GRB. 1334141, JAP. 0766711.
3,933,491.—IMAGING SYSTEM. JAN. 20, 1976.
3,966,465.—MULTIPLE LAYER MIGRATION IMAGING SYSTEM. JUNE 29, 1976. BEL. 0773383, CAN. 0960286, FRA. 7135575, GRB. 1370146, ITL. 0938874.
3,975,195.—MIGRATION IMAGING SYSTEM. AUG. 17, 1976.
3,982,939.—MULTIPLE LAYER MIGRATION IMAGING SYSTEM. SEPT. 28, 1976. BEL. 0773383, CAN. 0946672, FRA. 7135575, GRB. 1370146, ITL. 0938874.
3,985,560.—IMAGING SYSTEM. OCT. 12, 1976.
3,998,635.—IMAGING SYSTEM. DEC. 21, 1976.
4,007,042.—MIGRATION IMAGING METHOD. FEB. 8, 1977.
4,009,028.—REVERSE MIGRATION IMAGING SYSTEM. FEB. 22, 1977. BEL. 0827065.
4,012,250.—IMAGING SYSTEM-MIGRATION IMAGE CONVERSION BY DYE TRANSFER. MAR. 15, 1977. CAN. 0972208, GRB. 1341405, JAP. 0770142.
4,013,462.—MIGRATION IMAGING SYSTEM. MAR. 22, 1977.
4,040,826.—IMAGING SYSTEM OF MIGRATION MATERIAL IN SOFTENABLE LAYER. AUG. 2, 1977.
4,062,680.—IMAGING PROCESS EMPLOYING ELECTRICAL OR MAGNETIC REVERSE MIGRATION FORCE AND SOFTENABLE MAT. DEC. 13, 1977. BEL. 827065, FRA. 7509299, GRB. 1497825.
4,072,517.—MIGRATION IMAGING METHOD. FEB. 7, 1978.
4,081,273.—MIGRATION IMAGING METHOD. MAR. 28, 1978.
4,102,682.—IMAGING MEMBER. JULY 25, 1978.
4,157,259.—ERASURE IN MIGRATION IMAGING SYSTEM. JUNE 5, 1979. BEL. 827065. GRB. 1497825.
4,281,050.—MIGRATION IMAGING SYSTEM. JULY 28, 1981.

Class 31E

3,598,644.—IMAGING MEMBER FABRICATION. AUG. 10, 1971.
3,671,282.—METHOD OF MAKING AN IMAGING MEMBER. JUNE 20, 1972. BEL. 0755384, FRA. 7031999, GRB. 1326056, ITL. 0901735.
3,971,334.—COATING DEVICE. JULY 27, 1976.
4,009,028.—REVERSE MIGRATION IMAGING SYSTEM. FEB. 22, 1977. BEL. 0827065.
4,062,680.—IMAGING PROCESS EMPLOYING ELECTRICAL OR MAGNETIC REVERSE MIGRATION FORCE AND SOFTENABLE MAT. DEC. 13, 1977. BEL. 827065, FRA. 7509299, GRB. 1497825.
4,157,259.—ERASURE IN MIGRATION IMAGING SYSTEM. JUNE 5, 1979. BEL. 827065. GRB. 1497825.

Class 31F

3,520,681.—PHOTOELECTROSOLOGRAPHY. JULY 14, 1970. BRA. 0084241, CAN. 0852692, MEX. 0085656.
3,780,307.—LIQUID CRYSTALLINE COMPOSITIONS HAVING INDUCED OPTICAL ACTIVITY. DEC. 18, 1973. CAN. 1000484, GRB. 1408059.
3,909,262.—IMAGING MIGRATION MEMBER EMPLOYING A GELATIN OVERCOATING. SEPT. 30, 1975.
3,933,491.—IMAGING SYSTEM. JAN. 20, 1976.
3,966,465.—MULTIPLE LAYER MIGRATION IMAGING SYSTEM. JUNE 29, 1976. BEL. 0773383, CAN. 0960286, FRA. 7135575, GRB. 1370146, ITL. 0938874.
4,065,307.—IMAGED AGGLOMERABLE ELEMENT AND PROCESS OF IMAGING. DEC. 27, 1977. CAN. 929350, GRB. 1330518.
4,101,321.—IMAGING SYSTEM. JULY 18, 1978.

Class 31G

3,664,834.—MIGRATION IMAGING METHOD EMPLOYING ADHESIVE TRANSFER MEMBER. MAY 23, 1972. CAN. 0890353, GER. 1964201, GRB. 1291848, JAP. 0726370.
3,723,113.—POLYCHROMATIC ELECTROSOLOGRAPHIC. MAR. 27, 1973.
3,740,216.—PHOTOELECTROCOLOGRAPHIC IMAGING EMPLOYING A RELEASABLE IMAGING LAYER. JUNE 19, 1973.
3,741,757.—MIGRATION IMAGE DEVELOPMENT BY SPLITTING OR ABRADING SOFTENABLE LAYER. JUNE 26, 1973. ATR. 0306510, AUS. 0441768, BEL. 0743209, CAN. 0915960, FRA. 6943268, GER. 1961754, GRB. 1297129, ITL. 0879120, JAP. 0725058, PNM. 0001554, SPN. 0374618, SWD. 0358750, VZL. 0032779.
3,741,758.—MIGRATION IMAGING EMPLOYING PRESSURE NIP DEVELOPMENT. JUNE 26, 1973.
3,753,706.—PHOTOELECTROSOLOGRAPHIC IMAGING METHOD WHEREIN AN ABSORBENT MATERIAL IS USED. AUG. 21, 1973. CAN. 0945796, GRB. 1334141. JAP. 0766711.
3,770,554.—APPARATUS FOR SPLITTING A SOFTENABLE FILM COMPRISING BITE ROLLERS. NOV. 6, 1973.
3,791,822.—REMOVAL OF BACKGROUND FROM AN IMAGED MIGRATION LAYER. FEB. 12, 1974. ATR. 0306510, AUS. 0441768, BEL. 0743209, CAN. 0915960, FRA. 6943268, GER. 1961754, GRB. 1297129, ITL. 0879120, JAP. 0725058, PNM. 0001554, SPN. 0374618, SWD. 0358750, VZL. 0032779.
3,836,364.—PHOTOELECTROSOLOGRAPHIC PROCESS FOR MAKING MULTIPLE IMAGES. SEPT. 17, 1974. CAN. 0914519, GRB. 1344482, JAP. 0770140.
3,876,445.—MIGRATION IMAGING BY SPLITTING A SOFTENABLE MATERIAL. APR. 8, 1975. ATR. 0306510, AUS. 0441768, BEL. 0743209, CAN. 0915960, FRA. 6943268, GER. 1961754, GRB. 1297129, ITL. 0879120, JAP. 0725058, PNM. 0001554, SPN. 0374618, SWD. 0358750, VZL. 0032779.
3,979,210.—MIGRATION IMAGING MEMBER EMPLOYING A SURFACE SKIN. SEPT. 7, 1976.
4,014,695.—IMAGING SYSTEM. MAR. 29, 1977.
4,028,101.—MIGRATION IMAGING MEMBER EMPLOYING A SURFACE SKIN. JUNE 7, 1977.
4,055,418.—MIGRATION IMAGING METHOD USING AN IMAGING MEMBER EMPLOYING A SURFACE SKIN. OCT. 25, 1977.
4,101,321.—IMAGING SYSTEM. JULY 18, 1978.

Class 31H

3,795,512.—IMAGING SYSTEM. MAR. 5, 1974. ARG. 0188187, ATR. 0301340, AUS. 0429441, BEL. 0725617, BRA. 0088091, CAN. 0883747, DNK. 0131212, FRA. 1599277. GER. 1815217, GRB. 1257189, ITL. 0849328, JAP. 0686721, LXB. 0057585, MEX. 0101986, NOR. 0128084, NZL. 0154842, PTG. 0050858, SAF. 0688365, SPN. 0361650, STZ. 0523523, SWD. 0341128, VZL. 0023715.
3,839,031.—ELECTRODE DEVELOPMENT MIGRATION IMAGING METHOD. OCT. 1, 1974. ARG. 0184241, AUS. 0456843, BEL. 0755599, CAN. 0947367, FRA. 7032000, GRB. 1326950, ITL. 0907387, JAP. 0766709, MEX. 0120156, SPN. 0383314, SWD. 0369115.

Class 31I

3,861,911.—IMAGING FIXING METHOD. JAN. 21, 1975.

Class 31J

3,648,607.—IMAGING SYSTEM-MASTER MAKING BY BINDER PESO. MAR. 14, 1972. CAN. 0920410, GRB. 1322946, JAP. 0770136.
3,664,834.—MIGRATION IMAGING METHOD EMPLOYING ADHESIVE TRANSFER MEMBER. MAY 23, 1972. CAN. 0890353, GER. 1964201, GRB. 1291848, JAP. 0726370.
3,723,113.—POLYCHROMATIC ELECTROSOLOGRAPHIC. MAR. 27, 1973.
3,740,216.—PHOTOELECTROCOLOGRAPHIC IMAGING EMPLOYING A RELEASABLE IMAGING LAYER. JUNE 19, 1973.
3,820,984.—PHOTOELECTROSOLOGRAPHIC IMAGING METHOD USING FUSIBLE PARTICLES. JUNE 28, 1974.
3,923,504.—MIGRATION IMAGING MEMBER AND METHOD. DEC. 2, 1975.
3,985,560.—IMAGING SYSTEM. OCT. 12, 1976.

Class 31K

3,873,309.—IMAGING METHOD USING MIGRATION MATERIAL. MAR. 25, 1975. CAN. 978008, GRB. 1357143.

3,894,869.—A POLYCHROMATIC MIGRATION IMAGING SYSTEM. JULY 15, 1975.
3,912,505.—COLOR IMAGING METHOD EMPLOYING A MONOLAYER OF BEADS. OCT. 14, 1975. ARG. 0179561, AUS. 0426600, BEL. 0723097, CAN. 0890354, CHL. 0024276, FRA. 1587252, GRB. 1248744, GUA. 0002327, HOL. 0151526, ITL. 0845607, JAP. 0731223, MEX. 0107801, PNM. 0001814, PRU. 0010425, SPN. 0377583, STZ. 0526138, SWD. 0351501, URG. 0009366, VZL. 0023708.
3,966,465.—MULTIPLE LAYER MIGRATION IMAGING SYSTEM. JUNE 29, 1976. BEL. 0773383, CAN. 0960286, FRA. 7135575, GRB. 1370146, ITL. 0938874.
4,012,250.—IMAGING SYSTEM-MIGRATION IMAGE CONVERSION BY DYE TRANSFER. MAR. 15, 1977. CAN. 0972208, GRB. 1431405, JAP. 0770142.

Class 31L

3,615,394.—METHOD OF FORMING A PIGMENT IMAGE FROM A PIGMENT-RESIN TONER IMAGE. OCT. 26, 1971.
3,615,400.—MIGRATION IMAGING SYSTEM EMPLOYING CARBON LAYER BETWEEN SOLVENT SOLUBLE LAYER AND CONDUCTIVE LAYER. OCT. 26, 1971. ATR. 0306509, AUS. 0433959, BEL. 0726279, CAN. 0874906, DNK. 0129015, FRA. 1598889, GRB. 1261360. ITL. 0850165, LXB. 0057703, NOR. 0127265, NZL. 0154928, SAF. 0688514, SPN. 0380191, STZ. 0512755, SWD. 7210413.
4,012,250.—IMAGING SYSTEM-MIGRATION IMAGE CONVERSION BY DYE TRANSFER. MAR. 15, 1977. CAN. 0972208, GRB. 1431405, JAP. 0770142.

Class 32

3,719,951.—WRAP ADJUST DEVICE FOR CONTROLLING ENGAGEMENT BETWEEN A WEB AND ROLLER IN AN IMAGING SYSTEM. MAR. 6, 1973. CAN. 0995295, GRB. 1406047.
3,746,622.—COMPOSITION AND PROCESS. JULY 17, 1973. BEL. 0783439, CAN. 0986046, FRA. 7216331, MEX. 0132353, GRB. 1388725, ITL. 0965051, SAF. 7213163, STZ. 0590297.
3,774,592.—METHOD FOR PROVIDING AN IMPROVED BODY ELECTRODE ELECTRICAL CONNECTION. NOV. 27, 1973.
3,884,685.—LOW DENSITY PAPER USED IN TRANSFER ELECTROPHOTOGRAPHY. MAY 20, 1975. ARG. 0185573, ATR. 0314353, AUS. 0463544, BEL. 0768990, CAN. 9780051, CHL. 0027015, FRA. 7124553, GRB. 1353372, ITL. 0931092, MEX. 0124810, NOR. 0134805, NZL. 0164088, PNM. 0002462, SPN. 0392720, SWD. 0368995.
3,891,990.—IMAGING PROCESS USING DONOR MATERIAL. JUNE 24, 1975. GRB. 1459468.
3,946,172.—A LATCHING APPARATUS. MAR. 23, 1976. GRB. 1429530.
3,946,401.—ELECTROTHERMOGRAPHIC IMAGE PRODUCING TECHNIQUES. MAR. 23, 1976.
3,952,798.—INTERNALLY HEATED HEAT PIPE ROLLER-INTERNALLY HEATED HEAT PIPE. APR. 27, 1976. CAN. 0968341. GRB. 1368100.
3,971,950.—INDEPENDENT COMPRESSION AND POSITIONING DEVICE FOR USE IN MAMMOGRAPHY. JULY 27, 1976.
3,975,681.—ELECTRODE FOR MEASURING THICKNESS OF DIELECTRIC LAYERS ON CONDUCTIVE SUBSTRATES. AUG. 17, 1976.
3,978,342.—DUAL MODE RADIATION TRANSMITTING APPARATUS. AUG. 31, 1976.
3,997,498.—NON-SMUDGE CORRECTION FLUID. DEC. 14, 1976.
4,010,366.—MEASUREMENT OF THE MASS & CHARGE OF CHARGED CIRCUITS. MAR. 1, 1977.
4,018,953.—COATING METHOD. APR. 19, 1977.
4,020,210.—ENCAPSULATED WATER. APR. 26, 1977.
4,020,268.—AGAROSE CONTAINING AFFINITY MATRIX MATERIALS. APR. 26, 1977. BEL. 0783439, CAN. 0986046, FRA. 7216331, GRB. 1388725, ITL. 0965051, MEX. 0132353, SAF. 7213163, STZ. 0590297.
4,046,404.—CARBONLESS PAPER FOR USE IN ELECTROSTATOGRAPHIC COPIERS. SEPT. 6, 1977.
4,046,473.—PHOTORECEPTOR METHOD AND SYSTEM. SEPT. 6, 1977.
4,047,973.—RECOVERY OF SELENIUM AND SELENIUM ALLOYS BY HYDRAULIC LATHING. SEPT. 13, 1977.
4,059,353.—PHOTORECEPTOR BELT SYSTEM. NOV. 22, 1977.
4,074,000.—PRESSURE SENSITIVE ADHESIVE DRAFTING FILMS FOR USE IN ELECTROSTATOGRAPHIC COPIERS. FEB. 14, 1978.
4,085,245.—TRANSPARENCIES FOR COLOR XEROGRAPHIC COPIES. APR. 18, 1978.
4,097,267.—PURIFICATION AND REALLOYING OF ARSENIC/SELENIUM ALLOYS. JUNE 27, 1978.
4,097,273.—ARSENIC/SELENIUM RECOVERY. JUNE 27, 1978.
4,143,118.—APPARATUS AND METHOD FOR OZONE REDUCTION IN ELECTROSTATOGRAPHIC REPRODUCTION EQUIPMENT. MAR. 6, 1979.
4,161,362.—DOCUMENT CODING. JULY 17, 1979.
4,189,643.—TREATMENT OF PAPER FOR IMPROVED ELECTROSTATOGRAPHIC FUSING. FEB. 19, 1980.

Class 32A

3,132,972.—ENERGY CONVERSION CELL. MAY 12, 1964.
3,231,426.—CONTINUOUS CONCENTRATION CELL. JAN. 25, 1966.
3,379,527.—PHOTOCONDUCTIVE INSULATORS COMPRISING ACTIVATED SULFIDES SELENIDES AND SULFOSELENIDES OF CADMIUM. APR. 23, 1968. CAN. 0907921, GRB. 1079065.
4,175,981.—PHOTOVOLTAIC CELL COMPRISING METAL-FREE PHTHALOCYANINE. NOV. 27, 1979. SPN. 482151.
4,175,982.—PHOTOVOLTAIC CELL. NOV. 27, 1979. SPN. 482151.

Class 32B

3,150,446.—BRAZING METHOD AND COMPOSITION. SEPT. 29, 1964.
3,354,644.—LIQUID PROTECTION OF ELECTRODES. NOV. 28, 1967.
3,372,860.—CORRESPONDENCE PIECE. MAR. 12, 1968.
3,453,752.—ANSWER COMPARISON DEVICE. JULY 8, 1969.
3,483,777.—INFORMATION STORAGE AND RETRIEVAL EMPLOYING THERMAL PERFORATION OF THE RECORD MEMBER. DEC. 16, 1969. CAN. 0811566.
3,507,333.—FIRE PREVENTION SYSTEM. APR. 21, 1970. BEL. 0722599, CAN. 0910255, FRA. 1589864, GRB. 1229495, ITL. 0845253, JAP. 0752504.
3,510,210.—COMPUTER PROCESS CHARACTER ANIMATION. MAY 5, 1970.
3,552,562.—RANDOM ACCESS RETRIEVAL SYSTEM. JAN. 5, 1971.
3,577,203.—CHARACTER RECORDING AND RECOGNITION SYS. MAY 4, 1971.
3,635,789.—DRINKING OF WASTE XEROGRAPHIC COPY PAPER - REMOVAL OF XEROX TONER FROM COPY PAPER. JAN. 18, 1972.
3,645,048.—ERASER FOR VELLUM XEROGRAPHIC COPY PAPER. FEB. 29, 1972. AUS. 0449216, CAN. 0933707, GRB. 1329835.
3,647,713.—NONAGGLOMERATING BLENDING PROCESS. MAR. 7, 1972. FRA. 7004722, GRB. 1302409, JAP. 0661186.
3,648,387.—EDUCATIONAL AID. MAR. 14, 1972.
3,655,379.—PRINTING BY VAPOR PROPULSION. APR. 11, 1972. BEL. 0758057, CAN. 0929351, FRA. 7041621, GRB. 1333783, ITL. 0916693.
3,708,287.—OIL FILM IMAGING. JAN. 2, 1973.
3,713,861.—INHIBITOR DEVICE. JAN. 30, 1973. CAN. 0917701, GRB. 1338893, JAP. 0727989.
3,748,090.—EVAPORATION CRUCIBLE. JULY 24, 1973.
3,771,084.—MAGNETIC RETRIEVAL DEVICE. NOV. 6, 1973.
3,772,173.—ELECTROCONDUCTIVE PAPER. NOV. 13, 1973. CAN. 0930693.
3,793,016.—ELECTROPHOTOGRAPHIC SHEET BINDING PROCESS. FEB. 19, 1974.
3,794,550.—SHEET BINDING. FEB. 26, 1974. CAN. 1012583, GRB. 1431286.
3,812,905.—DYNAMIC BARRIER FOR HEAT PIPE. MAY 28, 1974.
3,842,273.—CORONA GENERATOR CLEANING APPARATUS. OCT. 15, 1974. AUS. 0480142, BEL. 0817485. GRB. 1458088, SPN. 0428358.
3,845,739.—SYSTEM FOR VAPOR DEPOSITION OF THIN FILMS. NOV. 5, 1974. BEL. 0798324, GRB. 1428703.
3,861,202.—METHOD OF DETECTING PRESSURE UNIFORMITY. JAN. 21, 1975.
3,861,353.—SYSTEM FOR VAPOR DEPOSITION OF THIN FILMS. JAN. 21, 1975. BEL. 0798324, GRB. 1428703.
3,862,841.—POLYMERIZATION IMAGING BY CHARGE INJECTION FROM A PHOTOCONDUCTIVE LAYER. JAN. 28, 1975.
3,869,910.—DIAGNOSTIC TEST DEVICE FOR DEVELOPER MATERIALS. MAR. 11, 1975. CAN. 1006012, FRA. 7421111.
3,873,813.—CREDIT CARD. MAR. 25, 1975.

3,877,155.—RESPONSIVE ANSWER SYSTEM. APR. 15, 1975. CAN. 0858780, GRB. 1235941, JAP. 0688426.
3,879,275.—POLYMERIZATION. APR. 22, 1975.
3,901,591.—MECHANISM FOR COOLING PHOTOSENSITIVE MATERIALS IN AN ELECTROPHOTOGRAPHIC COPYING MACHINE. AUG. 26, 1975.
3,918,337.—CUTTING DEVICE FOR ELASTOMERIC SHEET MATERIAL. NOV. 11, 1975.
3,921,179.—FLUID PEN ASSEMBLY. NOV. 18, 1975.
3,921,896.—RESEALABLE CONTAINER. NOV. 25, 1975.
3,923,512.—IMAGING RECORDING PROCESS. DEC. 2, 1975. CAN. 1007097, GRB. 1387177.
3,929,477.—IMAGE PRODUCING TECHNIQUES OF SUPERCONDUCTING MATERIAL IN A MAGNETIC FIELD. DEC. 30, 1975.
3,944,710.—TRANSPARENCY. MAR. 16, 1976.
3,949,853.—PROPORTIONAL-SPACED CHARACTER PRINT WHEEL. APR. 13, 1976. BEL. 0825109, CAN. 1011276, GER. 7502932, STZ. 579989.
3,965,276.—POLYMERIZATION IMAGING. JUNE 22, 1976.
3,966,467.—TRANSFERRING TONER TO AN HYDROCARBON COATED SHEET. JUNE 29, 1976.
3,969,618.—ON LINE PROM HANDLING SYSTEM. JULY 13, 1976.
3,970,186.—DAMPER FOR A COMPOSITE PRINT WHEEL. JULY 20, 1976. BEL. 0825110, CAN. 1010805, STZ. 579990.
3,974,363.—PROGRAMMABLE BILLING SYSTEM. AUG. 10, 1976. BEL. 0813449, FRA. 7412151, GRB. 1448508, ITL. 1007793.
3,978,737.—CHAIN TENSIONING DEVICE. SEPT. 7, 1976.
3,989,865.—A TRANSPARENCY. NOV. 2, 1976.
3,992,511.—RECOVERY OF SELENIUM-SELENIUM RECOVERY PROCESS. NOV. 16, 1976.
4,000,460.—DIGITAL CIRCUIT MODULE TEST SYSTEM. DEC. 28, 1976.
4,013,362.—ADJUSTABLE FORMS GUIDE. MAR. 22, 1977.
4,037,706.—COMPOSITE PRINT WHEEL. JULY 26, 1977. BEL. 0825108, CAN. 1010806.
4,054,534.—VOLATILE CLEANING SOLUTION FOR MIRRORS AND LENSES. OCT. 18, 1977.
4,144,550.—REPRODUCTION MACHINE USING FIBER OPTICS COMMUNICATION SYSTEM. MAR. 13, 1979.
4,170,791.—SERIAL DATA COMMUNICATION INTERFACE SYSTEM. OCT. 9, 1979.
4,244,069.—METHOD AND APPARATUS FOR BINDING SHEETS. JAN. 13, 1981.

Class 34A

4,231,674.—CLIP FOR ATTACHING GUIDE RAILS TO A FRAME. NOV. 4, 1980.

Class 34 A1

4,243,987.—DISPLAY PROCESSOR FOR PRODUCING VIDEO SIGNALS FROM DIGITALLY ENCODED DATA TO CREATE AN ALPHA-NUMERIC. JAN. 6, 1981.

Class 34B

4,195,277.—MOVING PERMANENT MAGNET LIMITED LIMITED MOTION ACTUATOR. MAR. 25, 1980.
4,203,680.—HIGH SPEED PRINTER WITH SELF-ADJUSTING CABLE PRELOAD MECHANISM. MAY 20, 1980.
4,243,331.—APPARATUS FOR ADJUSTING A CARRIAGE RELATIVE TO A PLATEN. JAN. 6, 1981.
4,252,450.—RIBBON DRIVE WITH SPRING-LOADED IDLER. FEB. 24, 1981.
ITEMS RETRIEVED, 228.

REISSUES

NOVEMBER 24, 1981

Matter enclosed in heavy brackets [ ] appears in the original patent but forms no part of this reissue specification; matter printed in italics indicates additions made by reissue.

Re. 30,801
DETACHABLE QUARTER-TURN BLIND HOLE FASTENER
Paul R. Gley, Hillsdale, N.J., assignor to Rexnord Inc., Milwaukee, Wis.
Original No. 3,744,101, dated Jul. 10, 1973, Ser. No. 142,153, May 11, 1971. Application for reissue Aug. 30, 1979, Ser. No. 71,210
Int. Cl.³ A44B *17/00*; F16B *19/00*
U.S. Cl. 24—221 K **4 Claims**

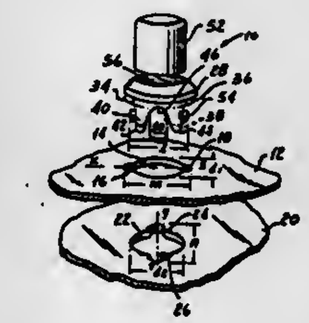

1. An assembly of a fastener and a panel and a frame including in combination, a panel formed with an opening having a major diametral dimension and a minor dimetral dimension, a frame formed with an opening having a major diametral dimension and a minor diametral dimension, said frame opening major and minor dimensions extending respectively generally in the directions of the panel minor and major dimensions, a fastener formed with *a bushing having* a shoulder adapted to engage the outside of said panel around said opening, a stud mounted in said bushing for rotary and for limited axial movement, a cross pin on said stud adjacent to the inside of said panel, said cross pin having a length less than said major diametral dimensions and greater than said minor diametral dimensions, means for biasing said stud for axial movement of said cross pin toward said bushing, means forming spaced locking elements on said bushing over which said cross pin moves in response to rotary movement of said stud in one direction and concomitant axial movement against the action of said biasing means to align said cross pin with the minor dimension of said panel releasably to retain said fastener on said panel, and stops on said bushing angularly disposed between said locking elements, said stops extending axially for a distance greater than said limited axial movement of said stud to prevent rotary movement of said stud beyond the point at which the cross pin engages the stops, said cross pin riding over said locking elements and into alignment with the minor dimension of said frame in response to rotary movement of said stud in the other direction to engage the inner surface of said frame releasably to secure the panel to the frame.

Re. 30,802
METHOD OF SECURING A SLEEVE WITHIN A TUBE
George D. Rogers, Jr., Enfield, Conn., assignor to Combustion Engineering, Inc., Windsor, Conn.
Original No. 4,069,573, dated Jan. 24, 1978, Ser. No. 670,932, Mar. 26, 1976. Application for reissue Feb. 22, 1979, Ser. No. 14,654
Int. Cl.³ B23P *17/02*
U.S. Cl. 29—421 R **7 Claims**

1. A method of securing a coaxially disposed tubular sleeve within a fluid conduit comprising the steps of:
a. inserting said sleeve into an open end of said conduit;
b. positioning said sleeve in a desired axial position with respect to said conduit;
c. applying a radially outwardly directed uniform force from within said sleeve along a selected axial portion thereof having a magnitude sufficient to cause said portion of sleeve to expand outwardly into contact with the inner wall of said conduit, *but not sufficiently to permanently increase the outer diameter of said fluid conduit*; and

d. applying [an] *a second* additional radially outwardly directed uniform force *controlled* through a limited distance from within said sleeve along said selected portion having a magnitude sufficient to cause said portion of sleeve and the wall of said conduit in contact therewith to concurrently radially outwardly expand a predetermined and limited distance.

Re. 30,803
COLORLESS RECORDING PAPER
Chester Davis, Cincinnati, Ohio, assignor to Scott Paper Company, Philadelphia, Pa.
Original No. 3,278,327, dated Oct. 11, 1966, Ser. No. 372,362, Jun. 3, 1964. Continuation-in-part of Ser. No. 200,052, Jun. 5, 1962, Pat. No. 3,193,404, which is a continuation-in-part of Ser. No. 800,377, Mar. 19, 1959, abandoned, which is a continuation-in-part of Ser. No. 658,249, May 10, 1957, abandoned, which is a continuation-in-part of Ser. No. 533,877, Sep. 12, 1955, abandoned, and Ser. No. 533,878, Sep. 12, 1955, abandoned. Application for reissue Nov. 9, 1977, Ser. No. 850,034
The portion of the term of this patent subsequent to Jul. 6, 1982, has been disclaimed.
Int. Cl.³ B41M *5/14*
U.S. Cl. 282—27.5 **16 Claims**

1. A transfer sheet having upon its surface a coating containing a substantially colorless dye salt derived from an organic sulfinic acid and an arylmethane dye base characterized by a logarithmic dissociation constant below 7, which upon transfer to a suitable receiving sheet is dissociated to the intensely colored ionic form of the dye to furnish a colored print.

5. A transfer sheet having upon its surface a coating containing a substantially colorless dye salt derived from hydrazoic acid and an arymethane dye base characterized by a logarithmic dissociation constant below 7, which upon transfer to a suitable receiving sheet is dissociated to the intensely colored ionic form of the dye to furnish a colored print.

Re. 30,804
OPTICAL AIR LENS SYSTEM
Harley B. Lindemann, 1533 Park Grove Rd., Baltimore, Md. 21228, and John B. Goodell, 1201 Southview Rd., Baltimore, Md. 21218
Original No. 3,976,364, dated Aug. 24, 1976, Ser. No. 559,011, Mar. 17, 1975. Continuation-in-part of Ser. No. 427,257, Dec. 21, 1973, abandoned. Application for reissue Aug. 23, 1978, Ser. No. 935,958
Int. Cl.³ G02B *25/00, 1/06*
U.S. Cl. 350—410 **37 Claims**

37. An optical lens system operative on a light ray comprising:
a first optical medium having a first refractive index,
a second optical medium having a second refractive index,
a pocket which contains said first optical medium,

a third optical medium having a third refractive index configured to define said pocket and being contiguous to said first and second optical mediums,

said third refractive index being higher in value than said second refractive index and said second refractive index being higher than said first refractive index,

first, second, third and fourth optical surfaces having coincident optical axes, said first and fourth surfaces being defined by the interfaces between said second and third optical mediums and said second and third surfaces being defined by the interfaces between said first and third optical mediums,

an object located substantially at an aplanatic point of said second surface within or contiguous to said second optical medium,

said first surface being so constructed and arranged to pass said light ray substantially without refraction,

said second surface being so arranged and constructed relative to said object to refract said light ray aplanatically thereby substantially eliminating aberration and coma, and

said third and fourth surfaces being so constructed and arranged to refract said light ray so as to substantially minimize spherical aberration and coma while tending to complete collimation of said ray.

Re. 30,805

CONTAINER WITH IMPROVED HEAT SHRUNK CELLULAR SLEEVE

Roger R. Rhoads, Toledo, Ohio, assignor to Owens-Illinois, Inc., Toledo, Ohio

Original No. 4,034,131, dated Jul. 5, 1977, Ser. No. 618,988, Oct. 2, 1975. Division of Ser. No. 504,111, Sep. 9, 1974. Application for reissue Nov. 16, 1979, Ser. No. 94,992

Int. Cl.³ B65D *1/02*

U.S. Cl. 428—35 **22 Claims**

1. In an article of manufacture comprising a container having a sidewall and further including a heat shrunk, polymeric seamed sleeve disposed circumferentially outwardly of said sidewall and in snug engagement therewith, the improvement wherein said polymeric sleeve is a composite structure of a closed cellular polyethylene layer and a non-cellular polyethylene layer in adhering contact with said cellular layer, *said composite structure having been formed by blown bubble co-extrusion with a blow-up ratio of about 2:1 or less and having a machine direction heat-shrinkage of at least 50% and a cross-diameter heat-shrinkage of 20% or less,* said cellular layer being in en-

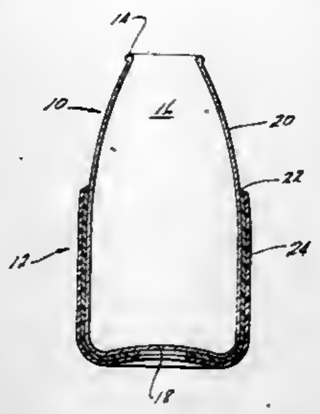

gagement with said sidewall and said non-cellular layer being disposed outwardly of said cellular layer.

Re. 30,806

LIGHT DEFLECTION APPARATUS

Winfield Sample, Sierra Madre, and Robert L. Cheney, Arcadia, both of Calif., assignors to Bell & Howell Company, Chicago, Ill.

Original No. 4,012,694, dated Mar. 15, 1977, Ser. No. 628,159, Nov. 3, 1975. Application for reissue Feb. 26, 1979, Ser. No. 15,099

Int. Cl.³ G01R *13/38*

U.S. Cl. 324—97 **18 Claims**

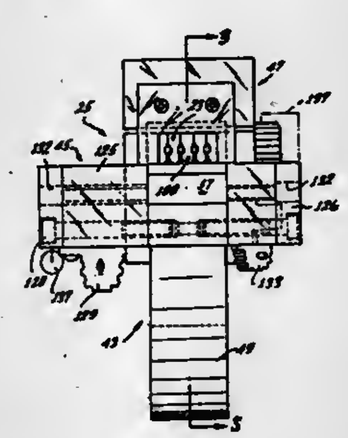

21. A galvanometer module, including:

a supporting structure including a first [structural] *top fixture* member having a longitudinal configuration, and a [second structural] *bottom fixture* member having a longitudinal configuration and including at least portions thereof disposed in spaced relationship with the [first structural] *top fixture* member;

at least a pair of galvanometers suspended between the [first structural] *top fixture* member and the portions of the [second structural] *bottom fixture* member;

enclosure means coupled to the supporting structure and defining a single cavity; and

the galvanometers being at least partially suspended by the supporting structure in the single cavity of the enclosure means.

PLANT PATENTS

GRANTED NOVEMBER 24, 1981

Illustrations for plant patents are usually in color and therefore it is not practicable to reproduce the drawing.

4,793

SPUR TYPE RED ROME APPLE TREE—PEACH VALLEY CULTIVAR

Dan E. Simmons, Rogers, Ohio, assignor to Stark Brothers Nurseries & Orchards Co., Louisiana, Mo.

Filed May 19, 1980, Ser. No. 151,248

Int. Cl.³ A01H *5/03*

U.S. Cl. Plt.—34 **1 Claim**

1. A new and distinct variety of apple tree substantially as illustrated and described characterized by (a) a vigorous compact growth habit, (b) large deep green leaves, (c) the ability to bear fruit which is a deeper more intense red color accumulated earlier than that of the Taylor cultivar of Red Rome apple tree described in U.S. Plant Pat. No. 3,121 and the Red Rome apple tree described in U.S. Plant Pat. No. 3,198, (d) the ability to form substantially more fruiting spurs on one year old shoots than the Red Rome apple tree described in U.S. Plant Pat. No. 4,096, and (e) the ability to form more fruiting spurs on two and three year old wood than the Red Rome apple tree described in U.S. Plant Pat. No. 4,096.

4,794

PIERIS JAPONICA NAMED CRYSTAL

Gerald H. Verkade, Rear 13, Lower Blvd., New London, Conn. 06320

Filed Jun. 27, 1980, Ser. No. 163,784

Int. Cl.³ A01H *5/00*

U.S. Cl. Plt.—54 **1 Claim**

1. A new and distinctive variety of Pieris plant substantially as herein shown and described, characterized by an abundant seedless flowering, its leaves being extremely thick, having an undulated, dark green color and having a shiny wax surface and remains glossy all year round.

4,795

EUONYMUS PLANT—CORLUTZ VARIETY

Clifford D. Corliss, Ipswich, Mass., assignor to The Conard-Pyle Comany, West Grove, Pa.

Filed May 19, 1980, Ser. No. 151,247

Int. Cl.³ A01H *5/12*

U.S. Cl. Plt.—63 **1 Claim**

1. A new and distinct variety of *Euonymus fortunei* which is a branch mutation of Emerald'N Gold variety, substantially as herein shown and described, characterized particularly as to novelty by the unique combination of:

(a) a more upright habit of growth which yields a larger plant than the parent variety,

(b) large richly colored variegated leaves which when mature are dark green with light to medium yellow margins,

(c) the propensity of exhibiting no substantial change in leaf coloration during winter,

(d) a propensity to resist a change in leaf orientation during winter,

(e) vigorous growth characteristics,

(f) the ability to thrive under a wide range of climatic conditions, and

(g) the ability to be sheared within prescribed limits or shaped to a specific form.

PATENTS

GRANTED NOV. 24, 1981

ERRATA

For CLASS	See PATENT NO.
411-057	4,301,706
501-003	4,302,233
501-070	4,302,250
376-133	4,302,284
376-159	4,302,285
376-249	4,302,286
376-217	4,302,287
376-210	4,302,288
376-267	4,302,289
376-287	4,302,290
376-293	4,302,291
376-325	4,302,292
376-381	4,302,293
376-446	4,302,294
376-450	4,302,295
376-290	4,302,297
376-198	4,302,749
375-111	4,302,831

PATENTS

GRANTED NOVEMBER 24, 1981

GENERAL AND MECHANICAL

4,301,544
APRON ASSEMBLY
Michael J. Burton, 236 Elm St., Steele, Mo. 63877
Filed Sep. 4, 1980, Ser. No. 184,100
Int. Cl.³ A41D *27/12*
U.S. Cl. 2—49 A **7 Claims**

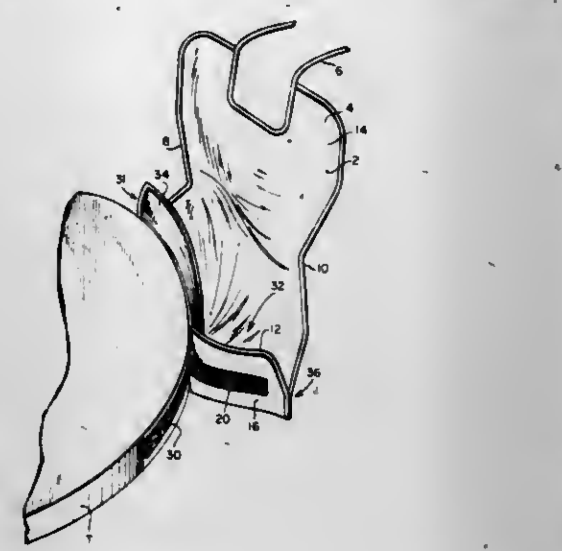

1. An apron assembly comprising a panel of flexible material adapted to overlie a frontal portion of a user's torso, said panel having first and second side edges interconnected by a bottom edge, said panel having a first surface bounded in part by said edges and a second surface bounded in part by said edges, first connector means disposed on said second surface proximate said bottom edge, second and third connector means disposed on said first surface proximate said first side edge and disposed further from said bottom edge than said first connector means, fourth and fifth connector means disposed on said first surface and proximate said second side edge and disposed further from said bottom edge than said first connector means, and sixth connector means adapted for attachment to an edge of a tray, said first connector means being adapted for releasable attachment to said sixth connector means to attach said panel to said tray edge and thereby form an elongated pocket in said panel, said second and third connector means being releasably interconnectable to close a first end of said pocket, and said fourth and fifth connector means being releasably interconnectable to close a second end of said pocket.

4,301,545
ADJUSTABLE SWIMSUIT
Virginia Camarena, 8601 International Ave., #167, Canoga Park, Calif. 91304
Filed Sep. 26, 1979, Ser. No. 79,098
Int. Cl.³ A41D *5/00*
U.S. Cl. 2—67 **5 Claims**

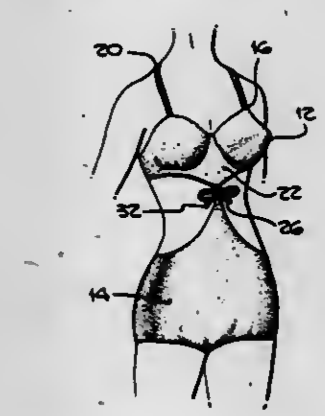

1. An adjustable swimsuit comprising:

an upper piece; and

a stretchable lower piece, said upper piece including a pair of cups and an intermediate connector section disposed between said cups, said connector including a first connector element, said stretchable lower piece including a connector member including a second connecting element for connection to said first connecting element, said first connector element and said second connector element being connectable to one another to stretch said lower piece to cover selected portions of the wearer's body when said first connector element and said second connector element are connected to one another.

4,301,546
PANTS-TYPE GARMENTS AND METHOD OF MAKING SAME
Harry R. de Polo, 480 Park Ave., New York, N.Y. 10021
Continuation-in-part of Ser. No. 54,478, Jul. 3, 1979, Pat. No. 4,240,158. This application Aug. 8, 1980, Ser. No. 176,522
Int. Cl.³ A41D *1/06, 17/02*
U.S. Cl. 2—227 **15 Claims**

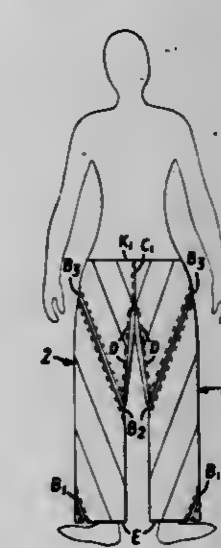

1. In a method of making a pants-type garment having two legs, a waist and a crotch, the steps of providing first and second pieces of material each having first and second side edges, a lower edge and an upper edge, the upper edge of each of said pieces of material having spaced portions shaped to form the waist of said garment and a reentrant intermediate portion shaped for construction of a crotch, providing first and second crotch bands each of which comprises first and second crotch band pieces joined end-to-end at an acute angle to one another, joining a side edge of said first crotch band with said intermediate portion of said upper edge of said first piece of material, joining a side edge of said second crotch band with said intermediate portion of said upper edge of said second piece of material, winding said first piece of material helically and joining said second side edge with said first side edge of said first piece of material in a helical junction line to form a first leg of said garment, winding said second piece of material helically and joining said second side edge with said first side edge of said second piece of material in a helical junction line to form a second leg of said garment, and joining a free side edge of said first crotch band with a free side edge of said second crotch band to join said crotch bands and thereby join said legs with one another to form said garment.

4,301,547
RAIN CAPE FOLDABLE INTO AN ENCLOSED HANDBAG
Sherry Bloise, 41 S. Central Ave., Valley Stream, N.Y. 11580
Filed May 19, 1980, Ser. No. 151,401
Int. Cl.³ A41D *3/08*
U.S. Cl. 2—88 1 Claim

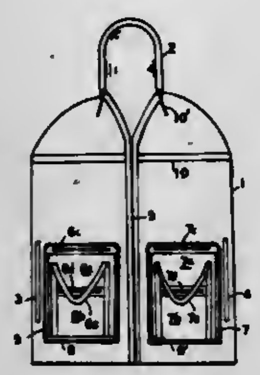

1. A cape foldable into an enclosed package comprising:
a thin foldable one piece cape member,
a pair of hand apertures in the sides of said cape member,
a pair of pockets on the front of the cape member,
a first zipper portion connected to and encircling one pocket,
a second zipper portion connected to and encircling the other pocket,
whereby the cape may be folded into a package having one pocket on one side and the other pocket on the other side so that when the zipper portions around the pockets are joined and closed the cape is completely enclosed between the pockets, so that the package may be used as a handbag,
each pocket comprising a first large pocket section and a second small pocket section mounted on the large pocket section.

4,301,548
ASCOT-LIKE GARMENT
Scottie L. Blake, 201 E. 35th St., Brooklyn, N.Y. 11238
Filed Jan. 31, 1980, Ser. No. 117,362
Int. Cl.³ A41B *1/04*
U.S. Cl. 2—91 5 Claims

1. A protective warming garment adapted to be worn around the neck, comprising:
(a) an elongated neck covering portion having first and second lengthwise edges and two widthwise edges, said lengthwise edges being longer than the widthwise edges;
(b) a relatively narrow securing portion secured integrally at one of its ends to the first lengthwise edge of said neck portion;
(c) a chest protecting portion, having a length substantially equal to the length of the other end of said securing portion at one end of said protective portion, integrally secured to said other end of said securing portion at said one end of said protective portion and gradually becoming wider towards the other end of said protective portion; and
(d) securing means secured at opposite widthwise edges of said neck portion whereby opposite widthwise edges of said neck portion may be secured to each other and said neck portion may be secured around the neck of the wearer, said neck portion, securing portion and chest portion each having a front side and a back side and having a fur-like material disposed on their respective front side.

4,301,549
TENNIS BALL POCKET
Arlen E. Ingram, 32606 Barkley, Livonia, Mich. 48154
Filed Jul. 14, 1980, Ser. No. 167,797
Int. Cl.³ A41D *27/20*
U.S. Cl. 2—250 6 Claims

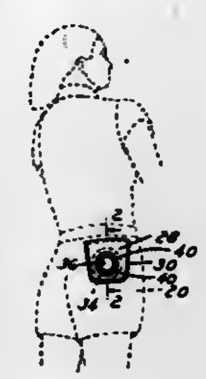

1. A retention pocket for tennis balls to be associated with the garment of a tennis player which comprises:
(a) a back panel,
(b) a front panel overlying said back panel having a hole within the margins thereof to allow a tennis ball to pass, and
(c) means at the perimeter of the hole in said front panel to resiliently retain a tennis ball in said pocket and to permit removal of said ball through said hole when inward pressure is applied around the ball against the body of the player to cause the ball to snap out of the pocket into the hand of the player.

4,301,550
CONVENIENT COMFORT CROTCH PANTYHOSE
Gladys Carver, P.O. Box 889, Los Gatos, Calif. 95030
Filed Jan. 16, 1980, Ser. No. 159,802
Int. Cl.³ A41B *9/04*
U.S. Cl. 2—408 5 Claims

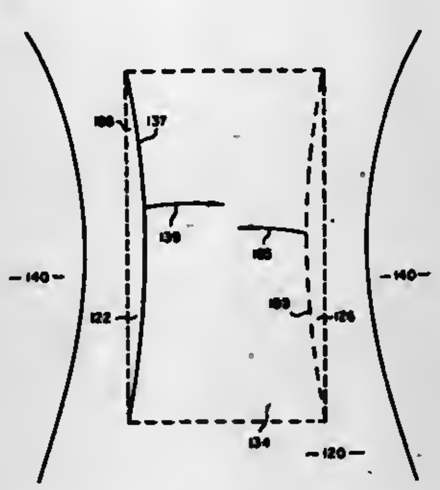

1. A pantyhose garment for females, having a crotch portion comprising a piece of substantially continuous knit fabric which forms two substantially overlapping panels which are defined by two slit openings running substantially parallel to each other and along a front-to-back direction, whereby a crotch opening may be provided by digitally manipulating the overlapping panels presented by pulling each panel in a direction orthogonal to the slit openings, the slit openings being positioned so that neither slit opening crosses any seams in the crotch portion.

4,301,551
DEFORMABLE HIGH ENERGY STORAGE TENSION SPRING
Roland Dore, Montreal, and Gilbert Drouin, l'Acadie, both of Canada, assignors to Ecole Polythechnique, Montreal, Canada
Filed Jal. 9, 1979, Ser. No. 56,043
Claims priority, application Canada, May 24, 1979, 328441
Int. Cl.³ A61F *1/00*
U.S. Cl. 3—1 14 Claims

1. An artificial prosthetic ligament capable of large elastic deformation and high resistance to breakage comprising an elongate elastic core having a low modulus of elasticity and opposed ends, a tensionable wrapping formed of threads having a large resistance to breakage is provided in contact about said core, said wrapping being constituted by at least two windings of helically wound thread having large resistance to breakage and a high modulus of elasticity as compared to that of the core, said windings being disposed in alternate opposed directions to one another and having substantially the same helix angle, said core being elongated axially by compression force applied by said wrapping caused by opposite relative axial displacement of opposed ends of said wrapping secured to traction means, said elongation being determined by the mathematical expression:

$$\Delta L = \epsilon L =$$

$$\frac{4FL}{E_f \pi d^2 n \cos^3\alpha} + \left(\frac{D^2 + D_i^2}{D^2 - D_i^2} - \nu\right) L \int_0^{\frac{2F\tan^2\alpha}{\pi D^2}} \frac{dp}{E(p)}$$

where ν is the Poisson ratio of the material, ΔL is the elongation of the prosthesis, E_f is the Young's modulus of the fiber material, D is the external diameter of the core, D_i is the internal diameter of the core, α is the helix angle, L is the length of the prosthesis, E(p) is the elastic modulus function of the core, n is the number of threads, ϵ is the axial strain for a given length L, F is the tensile force, and d is the thread diameter.

4,301,552
ENDOPROSTHETIC JOINT DEVICE
James T. London, Rancho Palos Verdes, Calif., assignor to Wright Manufacturing Company, Arlington, Tenn.
Continuation of Ser. No. 799,083, May 20, 1977, abandoned. This application Dec. 10, 1979, Ser. No. 102,145
Int. Cl.³ A61F *1/24*
U.S. Cl. 3—1.91 5 Claims

2. As a new article of manufacture, a component of an endoprosthetic joint device, said component being of arcuate shape and having an external arcuate bearing surface and an internal arcuate fixation surface adapted for implantation and fixation in the end of a bone of a joint of the body, the bearing surface tapering from end to end and being longitudinally convex and having similar transverse configuration from end to end comprising a centrally located concave groove of curved trans-

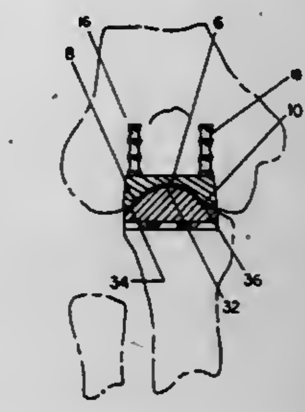

verse configuration extending from end to end of the bearing surface and a convexly curved ridge at each side of the concave groove extending throughout the longitudinal extent of the bearing surface.

4,301,553
PROSTHETIC KNEE JOINT
Douglas G. Noiles, New Canaan, Conn., assignor to United States Surgical Corporation, Norwalk, Conn.
Continuation of Ser. No. 831,095, Sep. 1, 1977, Pat. No. 4,219,893, which is a continuation-in-part of Ser. No. 605,208, Aug. 15, 1975, abandoned. This application May 23, 1980, Ser. No. 152,841
The portion of the term of this patent subsequent to Sep. 2, 1997, has been disclaimed.
Int. Cl.³ A61F *1/24*
U.S. Cl. 3—1.911 4 Claims

4. A prosthetic joint for surgical implant to link two bones in a human or animal body comprising a first component including fixation means for affixing said first component to one of said bones, a second component including a stem of circular cross section, coupling means for rotatably coupling said first and second components for rotation about an axis at right angle to said stem, and a third component including a fixation means for affixing said third component to the other of said bones, said third component including means for accommodating said stem to allow rotation between the second and third components about the axis of the stem independent of the relative position between the first and second components and means for supporting rotary compressive forces between the second and third components.

4,301,554
DRAIN TRAP
Mario J. Wojcicki, 9 Lyncourt, St. Thomas, Ontario, Canada
Filed Oct. 19, 1979, Ser. No. 86,500
Claims priority, application Canada, Oct. 30, 1978, 314884
Int. Cl.³ E03C *1/26, 1/282, 1/284*
U.S. Cl. 4—206 **9 Claims**

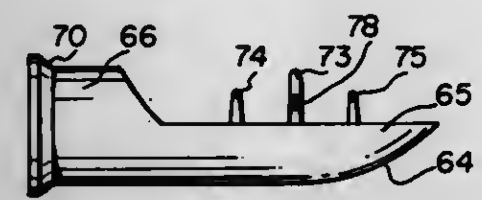

1. A drain trap comprising:
a tubular-wall pipe section having a portion of semi-toroidal configuration and a lateral drain trap opening defined in the wall of said semi-toroidal portion communicating with an inlet extension oriented generally tangentially with respect to said semi-toroidal portion;
a removable trap adapted for insertion through said drain trap opening and comprising a collecting tray and an integral mounting section, said trap being adapted for location in an operative position wherein the tray lies against and covers the bottom part of the internal wall surface of said toroidal portion;
said tray having a curvature which matches that of said bottom part and having walls which extend transversely part way up the sides of the internal wall of the bottom part, and extend longitudinally along a substantial portion of the length of said semi-toroidal portion, said tray including one wall portion which in the operative position completely covers said lateral opening;
retaining means engageable with said inlet extension to retain said trap in the operative position; and
sealing means for forming a fluid seal in said inlet extension.

4,301,555
REPLACEABLE FILTER FOR DEODORIZING THE AIR FROM A TOILET BOWL
Clarence E. Poister, P.O. Box 12232, Wichita, Kans. 67209
Filed May 27, 1980, Ser. No. 153,609
Int. Cl.³ A47K *13/00;* **E03D** *9/04*
U.S. Cl. 4—217 **8 Claims**

1. A replaceable filter having activated charcoal or the like therein for deodorizing the air from a toilet bowl, the filter secured to the toilet seat and providing a seal between the seat and the top of the bowl, the filter comprising:
an annular shaped filter top having a cavity formed therein and adapted for attachment to the bottom of the toilet seat;
an annular shaped filter bottom having a cavity formed therein, the filter bottom releaseably attached to the filter top with the cavity of the filter top index with the cavity of the filter bottom for receiving and holding the activated charcoal therein, the filter bottom disposed on top of the toilet bowl when the toilet seat is in a lowered position;
intake ports disposed around the inner circumference of the filter top for receiving the air from the toilet therethrough; and
means for discharging the deodorized air from the cavity of the filter top and the filter bottom.

4,301,556
HOLDER FOR TOILET DEODORANTS
Georg Schimanski, Bührener Weg 41, 5800 Hagen 8-Dahl, Fed. Rep. of Germany
Filed Mar. 25, 1980, Ser. No. 133,874
Claims priority, application Fed. Rep. of Germany, Apr. 27, 1979, 2917083
Int. Cl.³ E03D *9/02*
U.S. Cl. 4—231 **6 Claims**

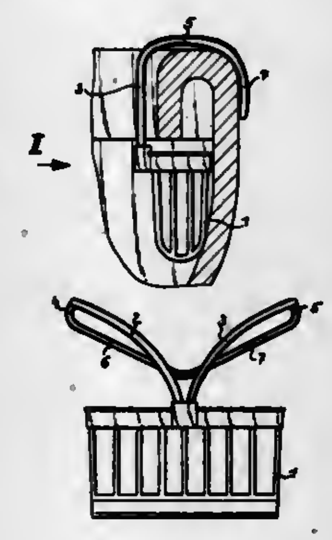

1. Holder for toilet deodorizing and cleaning and other active substances produced in one piece by plastic deformation, particularly by injection molding, consisting of a basket for the replaceable reception of the active substance and a hanging device formed centrally of one longitudinal side of the basket and which extends above the basket and grips around the edge of a toilet bowl, the hanging device having two arms which extend away from each other and are undetachably formed on the basket, extend upwardly from one centrally positioned location of the basket and, while moving away from each other, can be elastically urged towards each other, and top hooks arranged with the mouth of the hooks open towards the mouth of the basket and adjoining each of the upper end parts of the arms.

4,301,557
NONCLOGGING DRAIN STRUCTURE
Hank Walraven, P.O. Box 1155, Sausalito, Calif. 94965
Filed Mar. 7, 1977, Ser. No. 774,914
Int. Cl.³ A47K *1/14;* **E03C** *1/26*
U.S. Cl. 4—286 **6 Claims**

1. A strainer structure for sinks and the like comprising:
a wall having an inner surface adapted to be engaged by the material to be strained,
the material of said wall being bent to provide a plurality of spaced apart channels, opening inwardly of said inner surface,

each of said channels comprising a pair of opposed sides projecting outwardly of the plane of said inner surface,

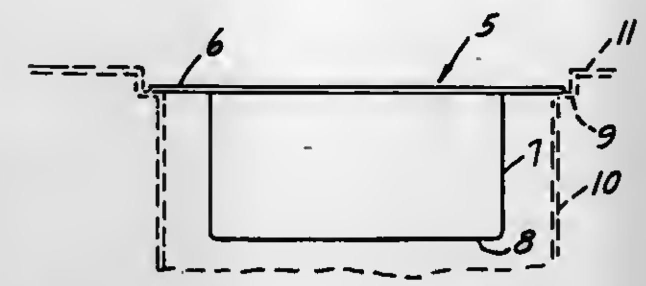

said sides being apertured to permit passage of liquid therethrough.

4,301,558
SANITARY UNIT
Jean C. Decaux, 53 avenue du Marechal Lyautey, 75016 Paris, France
Continuation-in-part of Ser. No. 964,454, Nov. 29, 1978, Pat. No. 4,210,973. This application Jun. 18, 1980, Ser. No. 160,486
Claims priority, application France, Dec. 14, 1979, 79 30676
Int. Cl.³ E03D *11/00*
U.S. Cl. 4—420 **16 Claims**

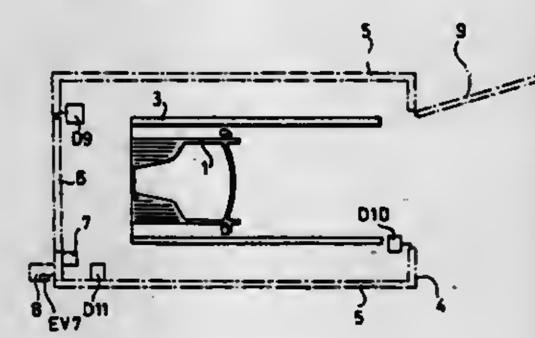

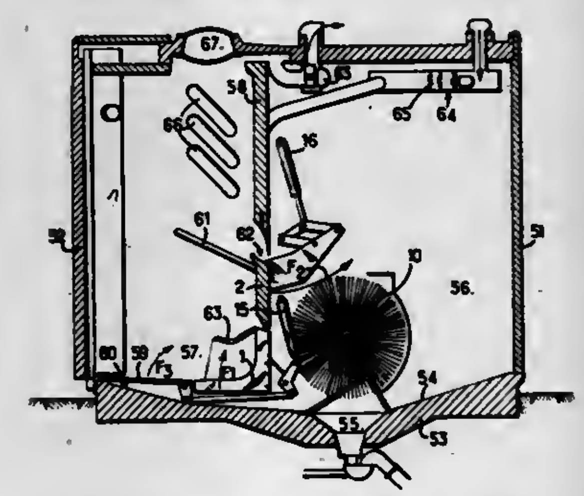

1. A sanitary unit comprising a vessel mounted to be movable between a first position of use and a second position for cleaning, cleaning means for brining into action when the vessel is in said second position, a pipe for discharging dirty water and dejections, control means for controlling the displacement of the vessel between said first position and said second position, actuating means for actuating the cleaning means, programming means for co-ordinating the actions of said control means and said actuating means in the course of each cycle of operation of the sanitary unit, and initiating means which initiate a cleaning cycle associated with said programming means, said programming means comprising a set of detectors for respectively generating signals respectively representing given situations of said sanitary unit and given states of said control means and actuating means, a set of memory means connected for respectively storing said signals during a given period of said cycle of operation and relay means connected to said memory means for exciting said control means and actuating means as a function of a selective excitation of said memory means.

4,301,559
SOFA BED MECHANISM
J. Van Geenberghe, Kortrijkstraat 246, Rue De Courtrai, 8610 Wevelgem, Belgium
Filed Mar. 6, 1980, Ser. No. 127,919
Int. Cl.³ A47C *17/04, 17/22*
U.S. Cl. 5—13 **9 Claims**

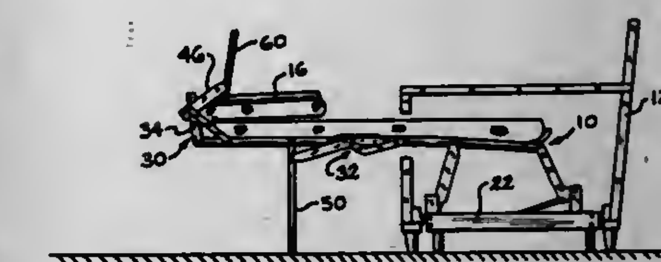

1. In a sofa bed assembly, a mechanism comprising a plurality of sections including in succession a rear section, an intermediate section, and a front section, said section being foldable between collapsed sofa position in which the sections are in substantially horizontal superposed relation in which said front section is sandwiched between said rear and intermediate sections and a horizontally extended bed position in which said sections extend in substantially horizontal alignment, a support frame for said sections disposed beneath said superposed sections in said sofa position, said support frame being of predetermined width, said superposed sections forming a sandwich unit of a width not exceeding said predetermined width, and means movably supporting said rear section on said support frame.

4,301,560
WATERBED MATTRESS
Richard Fraige, P.O. Box 649, Carson City, Nev. 89701
Filed Dec. 26, 1979, Ser. No. 107,037
Int. Cl.³ A47C *27/08*
U.S. Cl. 5—450 **30 Claims**

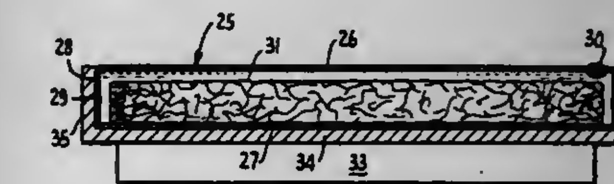

1. An improved waterbed mattress comprising a water-inflatable bag-like enclosure provided with at least one water-filling means; and
an expanded fiber product which resists decomposition in water disposed within said water-inflatable bag-like enclosure forming a mesh-like barrier to wave movement, said mesh-like barrier being highly compressible and capable of regaining substantially its original dimension when immersed in water.

4,301,561
SEPARABLE, FITTED LINER AND BED SHEET FOR WATERBEDS
Margaret McLeod, 10320 Tenby La., Apt. 201, Thornton, Colo. 80229
Filed Jan. 23, 1979, Ser. No. 5,683
Int. Cl.³ A47G *9/02*
U.S. Cl. 5—496 **3 Claims**

1. A bedding liner and sheet assembly for a waterbed mattress and the like having opposite sidewalls, a foot end and a head end, comprising:
a rectangular underliner adapted for positioning beneath said

mattress and having a first surface adjacent said mattress and a second surface opposite said first surface, said underliner having side and end wall portions extending upwardly along said sidewalls and ends of said mattress including U-shaped cut-out portions at its corners, first fastening means on said first surface extending lengthwise continuously around the peripheral edges of said side and end panel portions and second fastening means on said second surface extending lengthwise continuously around the peripheral edge of said side and end panel portions, said first and second fastening means defined by elongated, releasably connectable mating hook and thistle fastener strips;

a mattress pad adapted for positioning over said mattress and having side and end panel portions extending vertically along the sidewalls and ends of said mattress including U-shaped cut-out portions at its corners, first complementary fastening means in the form of elongated, releasably connectable hook and thistle fastener strips extending

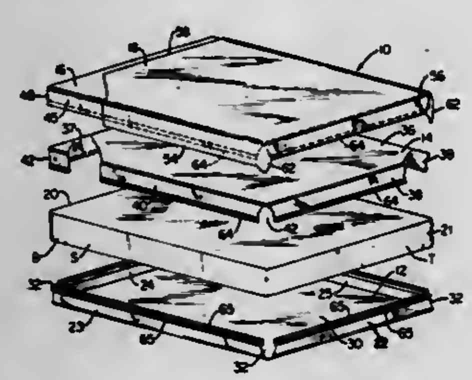

lengthwise continuously along said side and end panel portions of said mattress pad for releasably interconnecting said mattress pad to said first fastening means of said underliner;

a first sheet adapted for positioning over said mattress pad and having side and end panel portions extending vertically along the sidewalls and ends of said mattress including second complementary fastening means in the form of elongated, releasably connectable hook and thistle fastener strips extending lengthwise continuously along said side and end panel portions for said first sheet and adapted for releasably interconnecting said first sheet to said second fastening means of said underliner; and

a second sheet adapted for positioning over said first sheet, said second sheet having an end panel portion permanently connected at one edge to an end panel portion of said first sheet along said foot end of said mattress and provided with loose folds at the corners of said connected end panel portion overlying said U-shaped cut-out portions of said underliner and mattress pad.

4,301,562

DEVICE FOR WATER-SPORTS

Max Dürr, Breitenbacherweg 211, CH-4249 Wahlen, Switzerland

Filed Aug. 18, 1978, Ser. No. 934,813

Claims priority, application Switzerland, Aug. 24, 1977, 10373/77

Int. Cl.³ A63C *15/03*

U.S. Cl. 9—310 D **1 Claim**

1. A device for watersports in the form of an elongate float having a fixed substantially flat back surface and a substantially streamlined nose delimiting its length, said back surface being disposed at a relatively steep angle to said length so as to impede the rearward motion of said float, said float having static buoyancy, said float being provided with an attachment to hold a user's foot firmly but releasably, characterized in that (a) the transverse cross-section of the float is of substantially trapezoidal form throughout the length of the float, said trapezoidal form being defined by a pair of trapezoids having sides of different slope and having a common base, said common base being disposed substantially at the mid-water submersion line of said float, with the larger base of said trapezoidal form substantially coinciding with a bottom surface of said float so as to provide sharp edges fo: said bottom surface and thereby provide resistance to sideslipping, that (b) the cross-section of

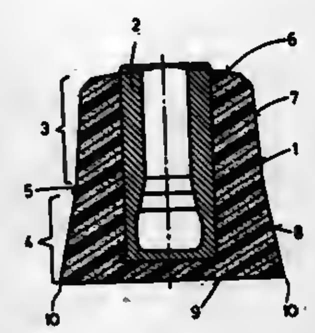

the float is tapered substantially throughout its length from back to nose at substantially constant tapers both in plan and in side view for optimization of the linear running stability, and that (c) the ratio of the weight of the float to the weight of the displaced water with fully submerged float lies between 0.08 and 0.15.

4,301,563

METHOD FOR ROLL POINTING A THREADED SCREW

Charles H. Deveney, Jr., Lower Burrell, Pa., assignor to Aluminum Company of America, Pittsburgh, Pa.

Filed Feb. 21, 1980, Ser. No. 123,305

Int. Cl.³ B21H *3/02*

U.S. Cl. 10—10 R **8 Claims**

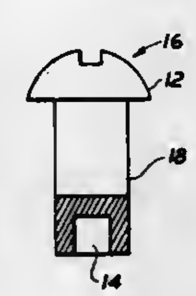

1. A method for making a pointed, threaded screw, comprising providing a generally cylindrical screw blank having a hollow cavity extending longitudinally into the blank from one end thereof, roll threading, tapering and pointing at least a portion of said blank adjacent said cavity and breaking away a portion of said blank having said cavity therein.

4,301,564

PLIABLE INNER BOOT AND INJECTABLE FIT PACKS FOR SKI BOOTS

Melvin W. Dalebout, Salt Lake City, Utah, assignor to Engineered Sports Products, Inc., Salt Lake City, Utah

Division of Ser. No. 883,460, Mar. 6, 1978, Pat. No. 4,182,056, which is a continuation-in-part of Ser. No. 711,476, Aug. 4, 1976, Pat. No. 4,078,322. This application Jun. 15, 1979, Ser. No. 48,986

Int. Cl.³ A43D *9/00;* A43B *7/14, 5/04;* B28B *1/48*

U.S. Cl. 12—146 R **8 Claims**

1. A method for making a custom fitting inner boot for a ski boot comprising:

providing a mandrel in the shape of a human lower leg and foot;

providing a custom fitting member over said mandrel, said custom fitting member comprising flexible sheet material formed to define a cavity surrounding the ankle and instep portions of said mandrel with an injection conduit extending from open communication with said cavity away from said material;

providing an enclosure for said mandrel, the internal surface of said enclosure and the external surface of said mandrel together approximately defining the finished shape of said inner boot, and positioning said injection conduit for access at the inner surface of said enclosure;

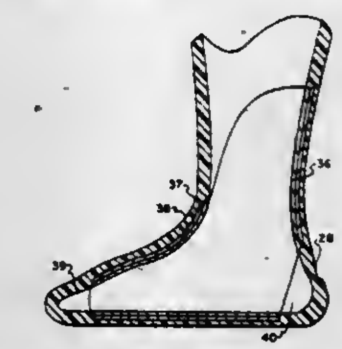

injecting a liquid resin reaction mixture into the shape between the mandrel and the enclosure, thereby to cause said space to become filled with pliable resinous foam; at least partially embedding said fitting member therein; and removing the thus-formed resinous foam and custom fitting member from the mandrel.

4,301,565

METHOD AND SYSTEM FOR THE REMOVAL AND REPLACEMENT OF A BRIDGE

Irwin Weinbaum, 100 Beekman St., New York, N.Y. 10038

Filed Mar. 19, 1980, Ser. No. 131,827

Int. Cl.³ E01D *1/00*

U.S. Cl. 14—1 **12 Claims**

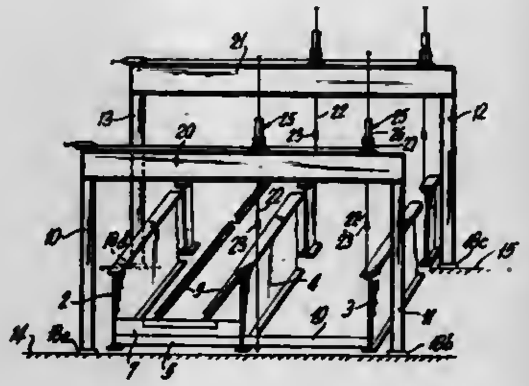

1. A method for the removal and replacement of a bridge built upon abutments and in relationship to a single span, comprising:

erecting at least four vertical removable columns on said abutments at opposite corners of the bridge span;

removably connecting two cross-beam means on said columns to permit the lifting of a bridge section to be removed, said two cross-beam means being separated by at least the length of said bridge section and being parallel to its width;

positioning jack means on each of said cross-beam means and attaching said jack means to said bridge section;

cutting the bridge section to be removed from the remainder of the bridge;

lifting said cut-off bridge section using said jack means;

moving said cut-off bridge section out of its original area by moving said jack means on said cross-beam means;

using said jack means to lower said bridge section onto a removal means to carry away said bridge section;

using said jack means to raise a replacement bridge section;

moving said replacement bridge section on said cross-beam means over the said span; and

using said jack means to lower said replacement bridge section into its replacement position.

4,301,566

APPARATUS FOR CONTROLLING THE MOVEMENTS OF A ROLLER-LIKE HORIZONTAL ROTARY WASHING BRUSH IN MOTOR VEHICLE WASHING APPARATUS

Gebhard Weigele, Am Schoenblick 1a, 8901 Taefertingen, Fed. Rep. of Germany

Filed Oct. 3, 1979, Ser. No. 81,610

Claims priority, application Fed. Rep. of Germany, Nov. 16, 1978, 7834006[U]

Int. Cl.³ B60S *3/06*

U.S. Cl. 15—53 A **4 Claims**

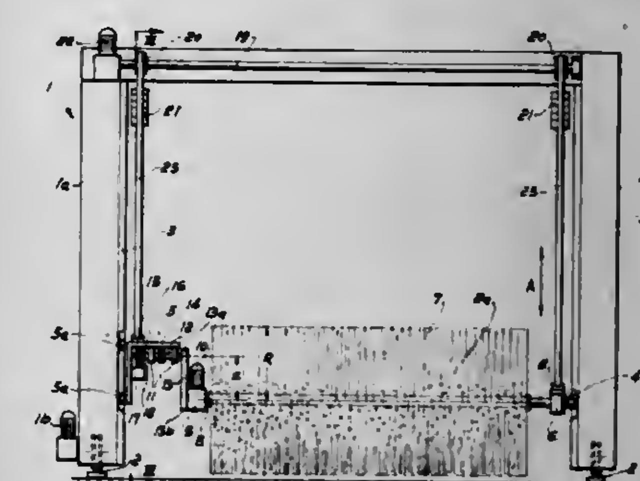

1. In an apparatus for controlling the movements of a roller-like horizontal rotary washing brush in a motor vehicle washing apparatus which includes a portal assembly supported for movement relative to a vehicle to be washed, said portal assembly having vertical guide rails, having a carriage guided for vertical movement in each said guide rail, and having rotary mountings which rotatably support respective ends of said horizontal washing brush and are each supported vertically movably by a respective said carriage which is guided in a said vertical guide rail, which includes first means for supporting said washing brush in such a way that it can be deflected in the direction of said relative movement of the vehicle against a return force, and which includes a control motor operatively coupled to said carriages and switching means responsive to said deflection of said washing brush for controlling said control motor which is operatively connected to said carriages, the improvement comprising wherein said first means includes a swinging arm, one of said rotary mountings being arranged at a lower end of said swinging arm and the upper end of said swinging arm being supported on said carriage associated with said one rotary mounting for pivotal movement about a substantially horizontal pivot axis member which extends substantially parallel to the axis of rotation of said washing brush, wherein the other said rotary mounting is rigidly connected to said carriage associated therewith, and wherein said switching means is disposed in the region of said swinging arm and pivot axis member.

4,301,567

ROTARY TERMINAL CLEANER

Walter R. Tucker, 28 Oak St., Deposit, N.Y. 13750

Filed May 23, 1980, Ser. No. 152,694

Int. Cl.³ A46B *3/18*

U.S. Cl. 15—160 **3 Claims**

1. Apparatus for cleaning cylindrical terminals, comprising:

a housing having first and second parts, said first part comprising a generally cylindrical member having an internal key, and said second part comprising an end cap having a slot therein for mating with said internal key in said first part to prevent relative rotation between said first part and said second part during operation; and

first and second abrading members located within said hous-

ing, said first abrading member being adapted to clean an exterior cylindrical surface of said terminal and said sec-

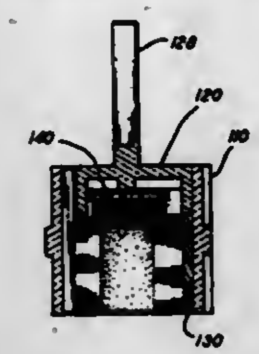

ond abrading member being adapted to clean a flat end surface of said terminal.

4,301,568
REFUSE COLLECTION DEVICES
Fridolin Poschlod, Hanover, Fed. Rep. of Germany, assignor to Schorling GmbH & Co. Waggonbau, Hanover-Linden, Fed. Rep. of Germany
Filed Jan. 8, 1980, Ser. No. 110,472
Claims priority, application Fed. Rep. of Germany, Jan. 15, 1979, 2901355
Int. Cl.³ A47L *5/12*
U.S. Cl. 15—340 6 Claims

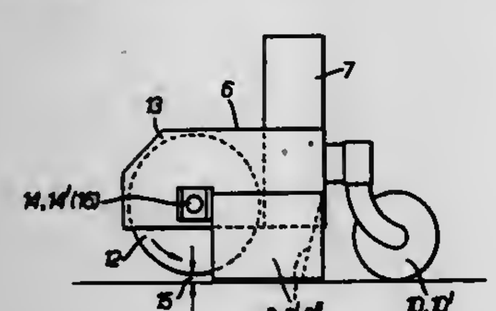

6. A refuse collection vehicle comprising a refuse collecting container and a suction duct for sucking refuse into the container, the suction duct being connected at one end thereof to the container and at an opposite end thereof to a collection device comprising a refuse inlet for connection to the suction duct, resilient elements surrounding the periphery of the refuse inlet and for forming a seal between the refuse inlet and a surface over which the inlet is travelling, a roller forming one of said resilient elements and extending generally across a front portion of the refuse inlet, mounting means rotatably mounting said roller for rotation about an axis extending normal to the direction of travel of the device, and a surface on said roller which is highly resilient in a radial direction of the roller whereby, when sizable refuse rolls under the roller, the relevant part of the roller adapts exactly to the outlines of the sizable refuse thus preventing unnecessary widening of the gap between the roller surface and the surface over which the inlet is travelling and preventing any substantial loss of suction.

4,301,569
QUADRANT OPERATOR
Francis J. McCabe, 239 Hastings Ct., Doylestown, Pa. 18901
Continuation-in-part of Ser. No. 905,211, May 12, 1978, Ser. No. 896,299, Apr. 14, 1978, Pat. No. 4,195,384, Ser. No. 896,237, Apr. 14, 1978, and Ser. No. 764,774, Feb. 2, 1977, which is a continuation of Ser. No. 689,994, May 26, 1976, Pat. No. 4,081,173, said Ser. No. 905,211, is a division of Ser. No. 729,831, Oct. 4, 1976, Pat. No. 4,113,232, said Ser. No. 896,299, is a continuation-in-part of Ser. No. 779,044, Mar. 18, 1977, Pat. No. 4,099,292, which is a continuation-in-part of Ser. No. 676,483, Apr. 13, 1976, Pat. No. 4,041,570, and Ser. No. 676,413, Apr. 13, 1976, Pat. No. 4,040,304. This application Mar. 1, 1979, Ser. No. 16,514
Int. Cl.³ E05F *15/20*
U.S. Cl. 16—48.5 20 Claims

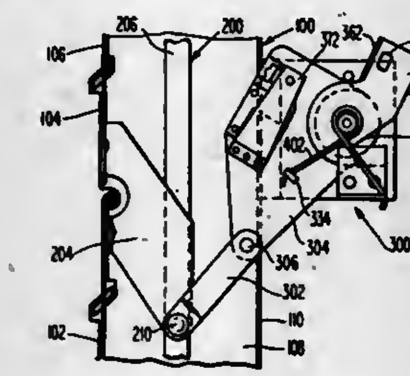

1. An operator for operating a damper having a frame, at least one blade, and linkage means connected to said blade for articulating said blade with respect to said frame, said operator compring:

at least two operator members, said members, being pivotally interconnected with a first of said members being a frame associated member which is pivotally associated with said frame and a second of said members being a linkage associated member which is pivotally associated with said linkage means, said members being associated with said linkage means and said frame so that upon rotation of said frame associated member relative to said frame through an operating portion of its arc, said blade will be articulated relative to said frame, said articulation being between a fully open and fully closed position with respect to said frame, and further said frame associated member being adapted to be movable beyond said operating portion of said arc through a locking portion of said arc of rotation to an over-center position with respect to the pivot points of said members to lock said blade in said fully closed position.

4,301,570
DOOR CHECK AND HOLDING DEVICE FOR A MOTOR VEHICLE
David H. Thomas, Woodburn, Ind., assignor to International Harvester Company, Chicago, Ill.
Filed Aug. 16, 1979, Ser. No. 66,994
Int. Cl.³ E05F *5/06*
U.S. Cl. 16—85 16 Claims

1. A door check and holding device for a motor vehicle door, comprising:

a door hinge assembly having a stationary hinge half adapted for mounting to a support member of a motor truck cab, a movable hinge half adapted for mounting to a door jamb of the door, and a hinge pin pivotally connecting the halves together;

a support plate means having a flat side connected to one of the hinge halves and having a generally vertically extending slot in the flat side;

a guide plate means having a first flat side connected to the other one of the hinge halves and having an opening with a semi-rounded peripheral surface extending through the

flat side and registering with an opening provided in said other one of the hinge halves; and

a door check and holding arm means having a cylindrical axial portion journally mounted in the vertically extending slot in the support plate means and having an elongated spring portion extending outwardly and upwardly from the axial portion and passing through the openings in the guide plate means and said other one of the hinge halves and merging into a semi-circular raised portion at a predetermined horizontal distance from the axial portion corresponding to the fully open position of the door, the

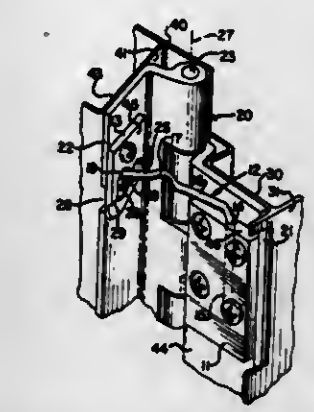

raised portion passable through the openings and engagable against a second flat side opposite the first flat side on the guide plate means in the fully opened position of the door, the raised portion curving downwardly and merging into a terminal end portion, the terminal end portion extending generally horizontally from the raised portion and bending into a downwardly and obliquely extending hook end means for preventing the withdrawal of the terminal end portion through the openings in the guide plate means and said other one of the hinge halves in the open position of the door.

4,301,571
APPARATUS AND METHOD FOR EXTRACTING BELLIES FROM CLAM MEAT
Gerald A. Blakeslee, 117 Morris Ave., Milton, Del. 19968
Continuation-in-part of Ser. No. 59,742, Jul. 23, 1979, Pat. No. 4,249,283. This application Jun. 6, 1980, Ser. No. 157,197
Int. Cl.³ A22C *29/04*
U.S. Cl. 17—51 9 Claims

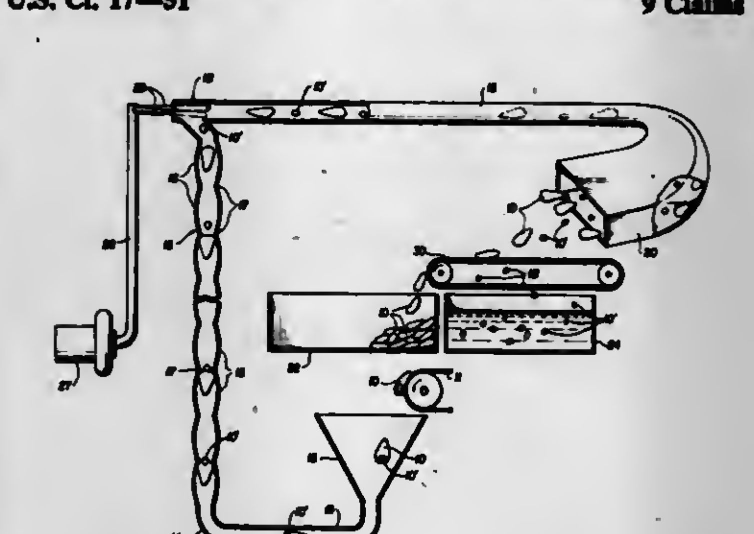

1. A method of extracting bellies from marine mollusks comprising utilizing suction to propel marine mollusks through a delivery tube in one direction, causing the mollusks to abruptly change and partially reverse their direction of travel beyond one end of the delivery tube and thereby abruptly bending the mollusks, subjecting them to a strong massage action and retarding their speed of travel, and acting on the mollusks with suction while their speed of travel is at the lowest point to complete extraction of the bellies from the mollusks.

4,301,572
COMBING ROLLER
Noriaki Miyamoto, Kariya, Japan, assignor to Kabushiki Kaisha Toyoda Jidoshokki Seisakusho, Aichi, Japan
Filed Dec. 26, 1979, Ser. No. 107,072
Claims priority, application Japan, Nov. 20, 1979, 54-160588[U]
Int. Cl.³ D01G *15/14*
U.S. Cl. 19—97 6 Claims

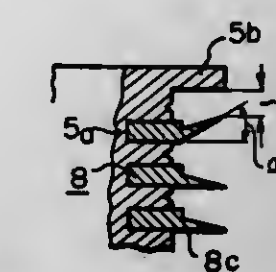

1. An improved combing roller for an open-end spinning machine, wherein a metallic wire having teeth is mounted on a body of said combing roller, said body comprises a main cylindrical body and a pair of flanges coaxially formed at both ends of said main body, a base portion of said metallic wire is pressed into a right hand or left hand helical groove formed in said main body and the working direction of said metallic wire coincides with the rotational direction of said combing roller, said improvement comprising a terminal portion of said metallic wire facing one of said flanges on a side of the roller corresponding to the direction of progress of an imaginary right hand screw imaginarily engaged with said right hand helical groove or an imaginary left hand screw imaginarily engaged with said left hand helical groove when said imaginary screws are turned in the direction corresponding to the rotational direction of said combing roller, said terminal portion of said metallic wire provided with at least one tooth inclined toward said flange.

4,301,573
FIBER PROCESSING APPARATUS AND METHOD
Josef K. Gunter; James E. O'Neal, and Thomas R. Jones, all of Durham, N.C., assignors to Gunter & Cooke, Inc., Durham, N.C.
Filed Jun. 18, 1979, Ser. No. 49,147
Int. Cl.³ D01G *9/12, 15/40*
U.S. Cl. 19—200 8 Claims

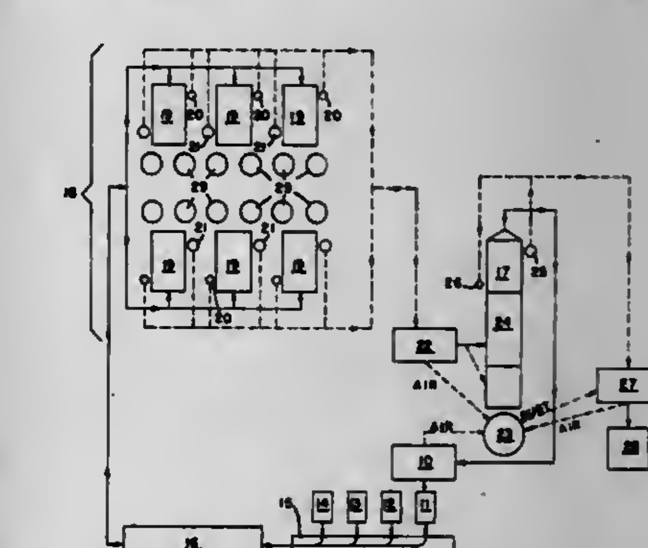

1. A system for processing incoming fiber stock having lint content of usable and unusable fibers and non-lint impurities comprising: carding apparatus for processing fiber stock of

usable and unusable fibers and non-lint impurities, said carding apparatus adapted to produce for subsequent processing the majority of fiber stock received and for removing during fiber stock processing substantially all non-lint impurities of said stock and quantities of usable and unusable fibers, fiber conveyor means for receiving and conveying usable and unusable fibers and non-lint impurities from said carding apparatus, an extractor means displaced from said carding apparatus for processing and separating said removed usable and unusable fibers and non-lint impurities recovered from said carding apparatus and received from said fiber conveyor means into usable fibers for recycling, and unusable fiber portions and non-lint impurities for waste, waste collecting means for said unusable fiber portions and non-lint impurities, and extractor stock condenser means for receiving usable fibers from said extractor means for recycling by blending with additional incoming fiber stock supply.

4,301,574

SLIVER CONDENSER FOR OPEN-END SPINNING MACHINES

Vitaly I. Zhestkov, Chilanzar, kvartal 19, 26, kv. 41; Gennady N. Shlykov, Chilanzar, kvartal 19, 31, kv. 3; Vasily M. Dyachkov, Chilanzar, kvartal 7, 18"V", kv. 8; Valentin N. Tikhonov, ulitsa Sh.Rustavelli, 55, kv. 28, and Abdurakhim Abduganiev, Chilanzar, kvartal 20, 33, kv. 7, all of Tashkent, U.S.S.R.

Filed Nov. 20, 1979, Ser. No. 96,242

Int. Cl.^{3} D01H ***5/72***

U.S. Cl. 19—288 **5 Claims**

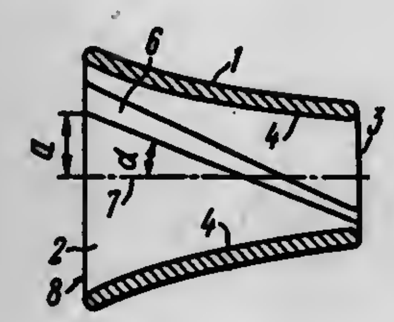

1. A sliver condenser for open-end spinning machines, comprising: a casing; a passage arranged within said casing and narrowing in the direction of flow of sliver which extends in said passage; an outlet opening of said passage which is of rectangular shape; projections extending over the entire length of said passage opposite to one another and at an angle to the longitudinal axis of the passage, said projections crossing one another.

4,301,575

PACKAGING CLIP

Ronald A. Goldberg, 89 Pinewood, Irvine, Calif. 92714

Filed Jan. 18, 1979, Ser. No. 49,425

Int. Cl.^{3} B65D ***71/00;*** **A44B** ***13/02***

U.S. Cl. 24—1 **9 Claims**

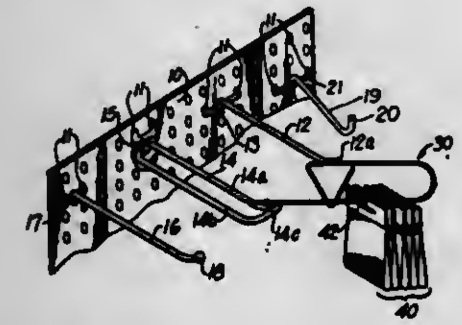

1. A device for releasably securing at least one package of the type having an aperture therethrough wherein the package may be hung on a bracket for supportive display, the device comprising:

a first substantially straight elongated member having a free end adapted to overlie said bracket,

a second substantially straight member shorter than said first member and in spaced-apart, substantially parallel relation thereto,

an arcuate member integrally connecting said first and second straight members, and

a spring-type locking mechanism located between said first and second straight members, integral to said second member and extending beyond said first member in proximate relation thereto to form a substantially circuitous structure comprising said locking mechanism, said arcuate member, and said first and second straight members,

said spring-type locking mechanism adapted to being resiliently urged away from said first member and toward said second member by the force of transferring said packages to open said circuitous structure whereby said packages may be transferred along said first member into and out from said circuitous structure concurrently with the unlocking of said locking mechanism.

4,301,576

TONGUE AND BUCKLE FASTENER FOR A SAFETY BELT HARNESS

Douglas J. Cunningham, Lutterworth, England, assignor to Britax (Wingard) Limited, Chichester, England

Filed Jul. 16, 1980, Ser. No. 169,243

Claims priority, application United Kingdom, Jul. 18, 1979, 24952/79

Int. Cl.^{3} A44B ***11/26***

U.S. Cl. 24—230 AL **3 Claims**

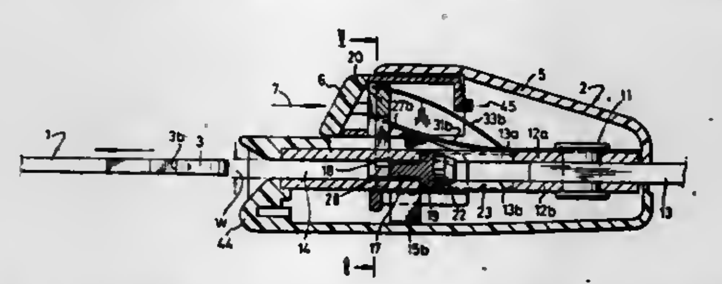

1. A tongue and buckle fastener for a safety belt harness comprises a tongue having a head portion, a buckle having a passageway for receiving the tongue, a spring-loaded latching member which is movable transversely of the passageway between a latching position and a release position, and a spring-loaded tongue ejector which is slidable in the passageway, the ejector having a recess shaped to engage with the head of the tongue and disposed so that, when the tongue has been ejected, the latching member rests on a side face of the ejector with a corner overhanging the recess, said side face of the ejector having an abutment adjacent to said corner of the latching member which engages with the latching member to inhibit inward movement of the ejector, the head of the tongue being operative, when inserted into the recess in the ejector, to engage with said overhanging corner of the latching member, thereby to lift the latching member clear of said abutment and allow inward movement of the ejector.

4,301,577

PROCESS FOR TREATING TUFTED PILE FABRIC

Helmut C. Mueller, Mauldin, and Harry G. Gallagher, Taylors, both of S.C., assignors to Bigelow-Sanford, Inc., Greenville, S.C.

Filed Aug. 30, 1979, Ser. No. 71,059

Int. Cl.^{3} D06C ***7/00, 29/00***

U.S. Cl. 26—2 R **1 Claim**

1. In a process for dyeing a tufted pile fabric, wherein said fabric is heated to a predetermined maximum temperature and passed over various rolls, resulting in bending, matting and crushing of the fabric pile, the improvement comprising the steps of:

subsequently heating said fabric within a chamber to a yarn memory overriding temperature above said predetermined temperature and in the range of 170° F. to 212° F., by directing steam through the back of the fabric and out the pile face thereof;

thereafter subjecting the heated fabric to a plurality of heating steps while said fabric is within said chamber and within 20° F. of said memory overriding temperature and at a temperature in the range of 170° F. to 190° F., said

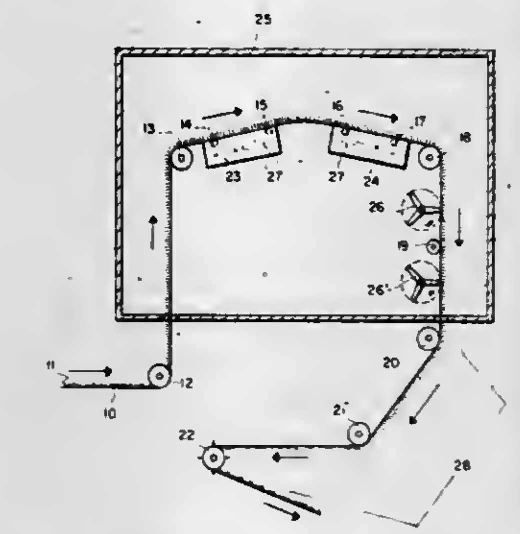

fabric being (i) subjected to 400–1,000 beats per minute and (ii) deflected a distance in the range of 1 to 3 inches during each said beating step, said beating steps being carried out along a vertical path of travel of said fabric, thereby erecting said pile and increasing the bulk thereof; and

after said beating steps cooling said fabric to a temperature below 110° F. before said fabric contacts any downstream processing rolls,

wherein said fabric is linearly moved along a path thereof at a speed in the range of 25 to 50 feet per minute during said subsequent heating and beating steps.

4,301,578

PROCESS AND APPARATUS FOR TEXTURING THREAD

Peter Dammann; Hans-Peter Berger; Wilfried Mündelein, all of Remscheid; Manfred Bussmann, Hückeswagen, and Horst Beifuss, Wermelskirchen-Tente, all of Fed. Rep. of Germany, assignors to Barmag Barmer Maschinenfabrik AG, Remscheid-Lennep, Fed. Rep. of Germany

Filed Mar. 5, 1979, Ser. No. 17,251

Claims priority, application Fed. Rep. of Germany, Mar. 3, 1978, 2809204

Int. Cl.^{3} D02G ***1/12, 1/20***

U.S. Cl. 28—256 **27 Claims**

1. In a process for the thermal treatment of at least one continuously running thread plug as formed from a thread of synthetic filaments in a stuffer crimping box, said thread plug being circumferentially conducted and wound into a closed layer of a plurality of helically coiled windings on a rotationally driven, air-permeable treatment drum, said thread plug also being advanced from the entry end to the exit end of said drum by a device applying pressure in the axial direction of the drum to a first winding at the entry end of said drum, and withdrawing the thread after thermal treatment on said drum at a disentangling point near the exit end of the drum, the improvement which comprises:

applying an additional advancing pressure in the axial direction of the drum onto only a last portion of said thread plug winding layer running into said disentangling point, said additional pressure being greater than said pressure applied in the axial direction to said first winding so as to axially separate said last portion of the thread plug winding and said thread away from the preceding thread plug winding and toward the exit end of the drum.

6. In apparatus for the thermal treatment of at least one continuous stuffer-crimped thread plug including at least a stuffer crimping box, a rotationally driven treatment drum of substantially cylindrical configuration and adapted to receive at least said thread plug coiled circumferentially thereon in a closed layer of a plurality of helical windings, said drum having a large number of openings in its cylindrical surface which contacts the thread plug windings, means to transport said thread plug from said stuffer crimping box onto the entry end of said drum, means at the entry end of said drum to advance

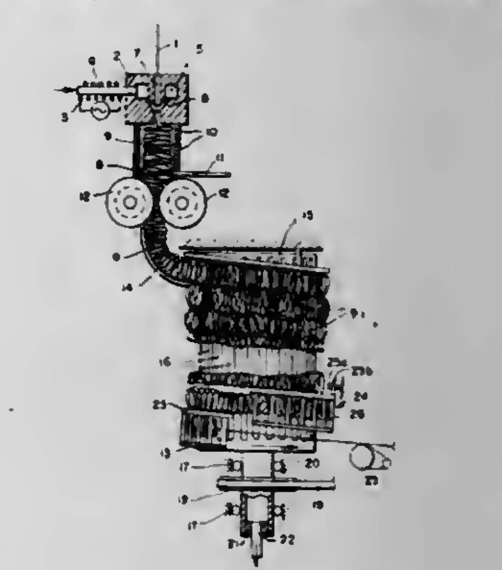

the closed layer of helical windings axially of the drum toward the exit end of said drum, means to induce a gas flow through the drum openings for treatment of the thread plug, and means to draw off the thread from the last thread plug winding at a disentangling zone near the exit end of said drum, the improvement in combination with said apparatus which comprises:

a separator near the exit end of said drum with means to place an additional advancing pressure in the axial direction of the drum onto only a last portion of the thread plug winding layer to axially separate the last thread plug winding away from the preceding thread plug winding and toward the exit end of the drum.

4,301,579

WIDENING-NARROWING GUIDE FOR TEXTILE FILAMENT BUNDLE

Gerardus Van den Hoven, Raamsdonksveer, Netherlands, assignor to E. I. Du Pont de Nemours and Company, Wilmington, Del.

Filed May 14, 1979, Ser. No. 38,733

Int. Cl.^{3} D02J ***1/18;*** **D02G** ***1/12***

U.S. Cl. 28—282 **8 Claims**

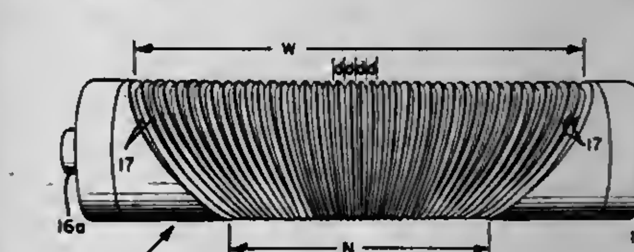

3. A guide for varying the width of elongated parallel flexible structures moving in a path, said guide comprising: a rotatable elongated member positioned across said path, said member having a curved surface facing said path with a plurality of grooves therein, said grooves lying in discrete planes, the planes of said grooves being in a nonparallel array, there being equidistant separation of the grooves along any line perpendicular to the length of the array, said array converging in one direction to a minimum dimension and then diverging from said minimum dimension in the general direction of said path

whereby unidirectional rotational movement of said curved surface engaging said structures in said grooves will converge and then diverge said structures.

4,301,580
MANUFACTURE OF MULTI-LAYERED ELECTRICAL ASSEMBLIES
Clarence L. Wallace, 1036 Highland, Solana Beach, Calif. 92075
Division of Ser. No. 797,193, Apr. 16, 1977, Pat. No. 4,183,074. This application Jun. 15, 1979, Ser. No. 48,758
Int. Cl.³ H01G *4/30*
U.S. Cl. 29—25.42 **17 Claims**

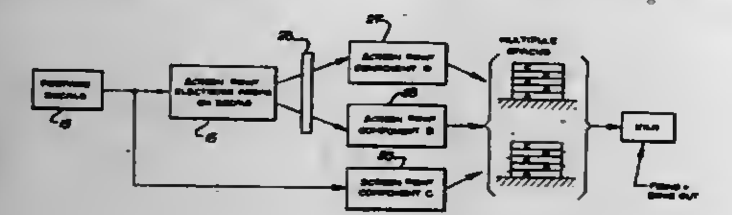

1. In the method of fabricating electrical component assemblies, the steps that include
(a) providing a first screen printed electrode and a first electrical component and locating the electrode in a recess formed by the component to produce a first laminate sub-assembly,
(b) providing a second screen printed electrode and a second electrical component and locating the electrode in a recess formed by the second component to produce a second laminate sub-assembly,
(c) providing a third laminate sub-assembly like said first laminate sub-assembly,
(d) locating said three sub-assemblies in mutually stacked relation, thereby to form a resultant assembly, with said second sub-assembly located between said first and third sub-assemblies, and with the electrodes of the first and third assemblies protruding at one side of the stack, and fusing said electrodes at said one side of the stack.

4,301,581
METHOD AND APPARATUS FOR THE PRODUCTION OF TURNED WORKPIECES ON MULTI-STATION MACHINE TOOLS
Eugen Bader, Saline 14, 7210 Rottweil, Fed. Rep. of Germany, and Kurt Jauch, Bempflingen, Fed. Rep. of Germany, assignors to Eugen Bader, Rottweil, Fed. Rep. of Germany
Continuation of Ser. No. 821,409, Aug. 3, 1977, abandoned. This application Aug. 3, 1979, Ser. No. 63,162
Claims priority, application Fed. Rep. of Germany, Sep. 23, 1976, 2642719
Int. Cl.³ B23P *17/00, 23/00;* B23Q *41/00*
U.S. Cl. 29—38 C **7 Claims**

1. A method for the production of machined workpieces from rod stock on multistation turret machines having at least one loading station and a plurality of subsequent working stations with a clamping device for each station on a turntable of the machine, and a machining unit coordinated with each of the working stations, said method comprising the steps of feeding a section of rod stock comprising a multiple of machining lengths plus a clamping section of a length sufficient for clamping a single machining length at the loading station into a clamping device at said loading station; clamping said section at the loading station; severing at the loading station the clamped section from the remainder of the rod stock at a distance from the clamping device corresponding to one machining length so that a length corresponding to a machining length protrudes beyond the clamping device at the loading station; indexing said turntable in successive steps through one revolution and machining the protruding section at said working stations, including severing the machined section at a working station; moving the remainder of said section at one station so that a length corresponding to a machining length protrudes beyond the clamping device at said one station; reclamping the remainder of said section at said one station;

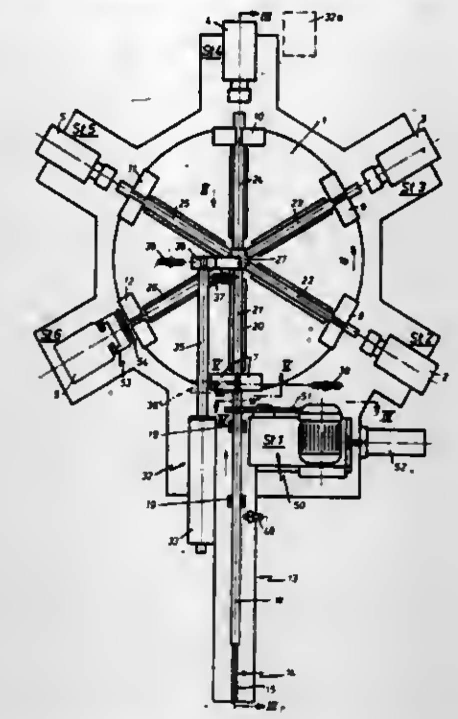

repeating said steps during further indexing of the turntable until only said clamping section remains in the clamping device at a working station; and finally moving said clamping section out of the clamping device at the respective station.

4,301,582
ROLLER MAGNETICALLY COMPENSATED AND ADJUSTED FOR DEFLECTION
Jaakko Riihinen, Jyväskylä, Finland, assignor to Valmet Oy, Finland
Filed Oct. 16, 1979, Ser. No. 85,297
Claims priority, application Finland, Oct. 19, 1978, 783191
Int. Cl.³ B21B *13/02, 13/14*
U.S. Cl. 29—116 AD **10 Claims**

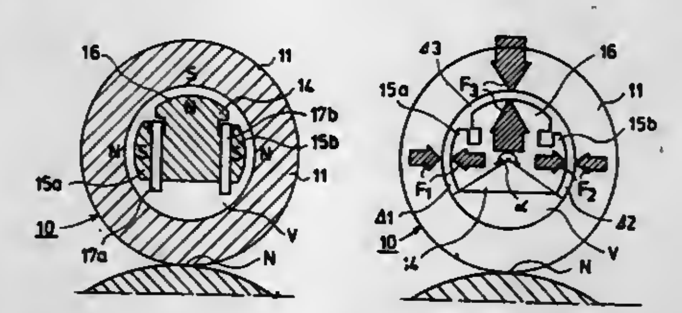

1. A roller magnetically compensated and adjusted for deflection, said roller having a non-rotating axle with ends having a load imposed thereat and a cylindrical shell rotatably supported by bearings on the axle, said roller comprising
a magnetic core formed in said axle and having in transverse section a plurality of pole shoes spaced from said shell by an air gap, at least a part of said shell being made of magnetically conductive material; and
a plurality of electromagnetic windings each wound on said core at a corresponding one of said pole shoes for producing a magnetomotive force in a manner whereby the magnetic flux through the air gap between the pole shoes and the shell produces a compensating force field between said shell and said core.

4,301,583
FLUID METERING ROLLER
Johnnie L. Poole, Charlotte, N.C., assignor to Consolidated Engravers Corporation, Charlotte, N.C.
Filed Feb. 15, 1979, Ser. No. 12,468
Int. Cl.³ B30B *3/00*
U.S. Cl. 29—121.2 **3 Claims**

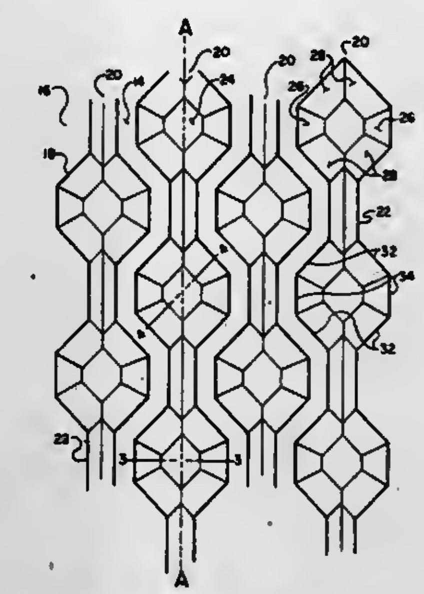

1. A liquid transfer roller having spaced cells depressed into the surface thereof, said cells being arranged in series of said cells extending generally circumferentially around said roller, and channels depressed into the surface of said roller connecting serially adjacent cells of each said series of said cells, said channels being substantially narrower than said cells and forming unobstructed paths between said adjacent cells allowing liquid to be jetted along the channels into and through the cells, adjacent series of said cells and their connecting channels extending around said roller wherein said cells in said adjacent series are in staggered relation to form an internested pattern of said cells having continuous walls between said adjacent series of said cells and channels, said cells, channels and walls covering the useful surface of said roller, said walls having tops which form the outer surface of the roller, and the tops of the walls between said adjacent series of said cells and channels having portions alternately extended laterally of said series toward one side and then the other and connected by other portions of the tops of the walls disposed in the general direction of said adjacent series of said cells and channels extending around said roller with the continuous surface of said tops of generally uniform width throughout their extent around said roller.

4,301,584
METHOD OF FORMING FIBER AND METAL MATRIX COMPOSITE
James R. Dillner, Amston, Conn., and Hilton F. Stone, Jr., West Palm Beach, Fla., assignors to United Technologies Corporation, Hartford, Conn.
Filed Jan. 31, 1980, Ser. No. 117,169
Int. Cl.³ B23P *15/04;* B23K *31/00;* B21D *53/78*
U.S. Cl. 29—156.8 B **8 Claims**

1. The method of forming contoured composite sheets containing low ductility fibers comprising,
a. providing a multiplicity of composite sheets containing low ductility fibers;
b. placing said multiplicity of composite sheets between a first carrier sheet and a second carrier sheet to form a package, the carrier sheets having greater overall dimensions than the composite sheets;
c. restraining only the carrier sheets by means which fixedly hold their peripheries;
d. pressurizing the first carrier sheet side of the package with means sufficient to cause permanent deformation and contouring of the package toward the second carrier sheet side;
e. separating the carrier sheets from the composite sheets.

8. The method of fabricating a contoured structure having a low ductility fiber containing composite material core with a first skin and a second opposing skin, comprising:
A. preforming the two skin portions by
(1) placing together a first sheet and a second sheet of skin material within a first die with cavities, to form a sheet pair disposed laterally between opposing contoured cavities of the die, the opposing cavities having portions with the contour desired in the skin portions;
(2) sealing the sheet pair around its periphery to form a pressure containing space therebetween and providing a pressurization port to said space;
(3) pressurizing the space between the sheets with a fluid to permanently deform the sheets apart from each other until they contact and comply with the opposing cavities of the die;
(4) releasing the sheets from fluid pressure and placement within the die;
(5) cutting as a portion from the first sheet the first skin part, and as a portion from the second sheet the second

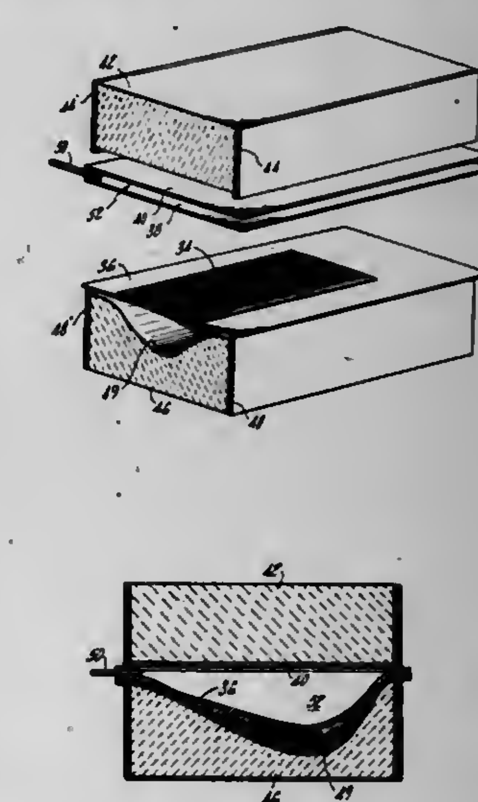

skin part; the skin parts having substantially the contours desired in the skins of the structure; and
B. preforming the composite core part by
(1) providing a multiplicity of composite sheets containing low ductility fibers;
(2) placing said multiplicity of composite material sheets between a first carrier sheet and a second carrier sheet to form a package, the carrier sheets having greater overall dimensions than the composite sheets;
(3) clamping only the carrier sheets around their peripheries by means which fixedly hold the peripheries;
(4) positioning a second contoured die in proximity to the second carrier sheet to receive the package upon deformation;
(5) pressurizing the first carrier sheet side of the package sufficiently to cause the second carrier sheet to intimately contact the contoured die and thereby permanently deforming the carrier sheets and the composite sheets contained therebetween;
(6) removing the package from the second die and separating and discarding the carrier sheets; and
C. placing the preformed fiber composite core between the preformed skins to form an assembly within a third die

having the contours desired in the structure being fabricated; and,

D. pressing the assembly to form the structure.

4,301,585
METHOD OF FORMING PLATE HAVING FINE BORES

Kunio Ikeda, Tokyo, Japan, assignor to Ricoh Co., Ltd., Tokyo, Japan

Filed May 6, 1980, Ser. No. 147,124

Claims priority, application Japan, May 31, 1979, 54-67668; May 31, 1979, 54-67669; Jun. 5, 1979, 54-70202

Int. Cl.³ B23P *15/16*

U.S. Cl. 29—157 C **1 Claim**

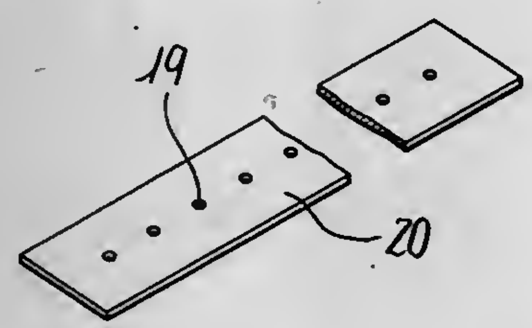

1. A method of producing a multi-nozzle head having fine bores comprising the steps of: winding a wire of a diameter coinciding with the diameter of the fine bores to be formed around a mold member having a flat surface in such a manner that the turns of the wire extend in parallel with one another on the flat surface of the mold member; forming on said flat surface an electro-cast layer having a thickness large enough to embed said wire and coat said flat surface; polishing the exterior surface of the electro-cast layer to make the same flat; attaching another mold member of the same material as the first-mentioned mold member to the latter; forming a polished surface on at least one of said mold members in a direction perpendicular to said wire, removing said wire to a desired depth by dissolution to form a shaping mold having cavities, pressing a heated thermoplastic resin onto said polished surface and against said cavities by using said shaping mold and then separating said resin, thereby to form a plastic sheet having a plurality of projections of the same diameter as said wire, effecting a treatment for obtaining a conductivity on said plastic sheet thereby to form an electro-cast master; forming an electro-cast film on said master; effecting a lapping on said electro-cast film; and separating said electro-cast film, thereby to obtain a plate having a plurality of fine bores.

4,301,586
METHOD OF MAKING A VALVE CONSTRUCTION HAVING MULTIPLE PISTON MEANS

Marvin P. Weaver, Knoxville, Tenn., assignor to Robertshaw Controls Company, Richmond, Va.

Division of Ser. No. 911,403, Jun. 1, 1978, Pat. No. 4,228,817. This application Apr. 18, 1980, Ser. No. 141,336

The portion of the term of this patent subsequent to Oct. 21, 1997, has been disclaimed.

Int. Cl.³ B23P *15/00*; F16K *27/04*

U.S. Cl. 29—157.1 R **14 Claims**

1. In a method of making a valve construction having a housing means provided with a chamber and port means leading to said chamber and having an axially movable piston means disposed in said chamber to interconnect certain of said port means together in relation to the axial position of said piston means that is caused by a condition responsive device and a spring means operatively associated with said piston means, the improvement comprising the steps of forming said piston means to comprise a plurality of pistons disposed in spaced parallel relation and being secured together to be axially moved in unison in said chamber under the influence of said condition responsive device, disposing a single coiled compression spring in said chamber, and telescoping said

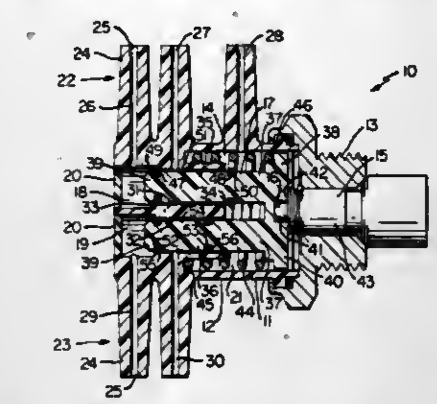

spring over all of said pistons so that all of said pistons are axially disposed inside said spring.

4,301,587
MACHINE FOR CLOSING STANDING SEAMS OF SHEET METAL ROOFING

Thomas J. Boyd, Rte. 1, Box 500, Wellsburg, W. Va. 26070

Filed Mar. 10, 1980, Ser. No. 128,403

Int. Cl.³ B23P *11/00*

U.S. Cl. 29—243.5 **10 Claims**

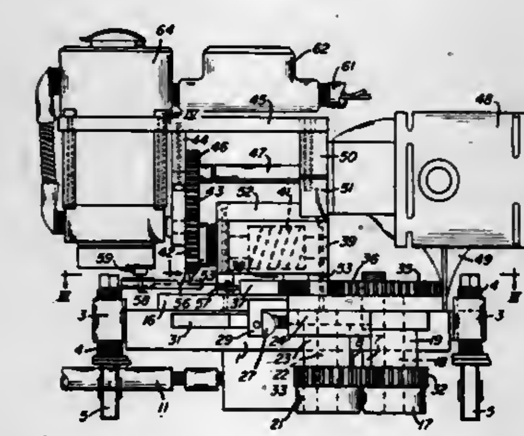

1. A machine for closing and sealing the interlocked upper portions of double-lock standing seams of sheet metal roofing, comprising a carriage adapted to straddle a standing seam, a vise suspended from the carriage and having a pair of normally spaced cooperating jaws adapted to receive a length of the standing seam between them, means connecting one of the jaws to the carriage for movement in a straight line toward and away from the other jaw, and a fluid pressure cylinder supported by the carriage for periodically moving said movable jaw toward the other jaw to compress and close said interlocked upper portions of the seam, the carriage being adapted to be moved a predetermined distance along the seam after each closing operation to close and seal the seam throughout its length.

4,301,588
CONSUMABLE AMORPHOUS OR POLYSILICON EMITTER PROCESS

Cheng T. Horng, San Jose, Calif., and Alwin E. Michel, Ossining, N.Y., assignors to International Business Machines Corporation, Armonk, N.Y.

Filed Feb. 1, 1980, Ser. No. 117,887

Int. Cl.³ H01L *21/205*

U.S. Cl. 29—276 **1 Claim**

1. In a method for fabricating high speed bipolar transistors in an integrated circuit structure formed in a monolithic silicon substrate, said high speed bipolar transistors having shallow emitters, said process including the following steps:

(a) forming an emitter window in a layer of insulating material on a planar surface of said monolithic silicon substrate;

(b) filling said emitter window with chemically vapor deposited polysilicon;

(c) ion implanting with arsenic ions said chemically vapor deposited polysilicon contained in said emitter window, said ion implanting energy being sufficient to render amorphous the interface of said chemically vapor deposited polysilicon and monolithic silicon;

(d) oxidizing the exposed surface of said chemically vapor deposited polysilicon and concurrently driving in the dopant to form a shallow emitter;

(e) removing the oxide coating from the chemically vapor deposited polysilicon;

(f) depositing a layer of Pt on the exposed chemically vapor deposited polysilicon; and,

(g) reacting the Pt with the chemically vapor deposited polysilicon to utilize all of the polysilicon in the formation of PtSi, whereby a very shallow emitter is formed.

4,301,589
CHAIN SLING TOOL

Lars O. A. Fredriksson, Växjö0, Sweden, assignor to K A Bergs Smide AB, Gemla, Sweden

Filed Oct. 24, 1979, Ser. No. 88,087

Claims priority, application Fed. Rep. of Germany, Nov. 2, 1978, 2847529

Int. Cl.³ B23Q *1/00*

U.S. Cl. 29—283 **8 Claims**

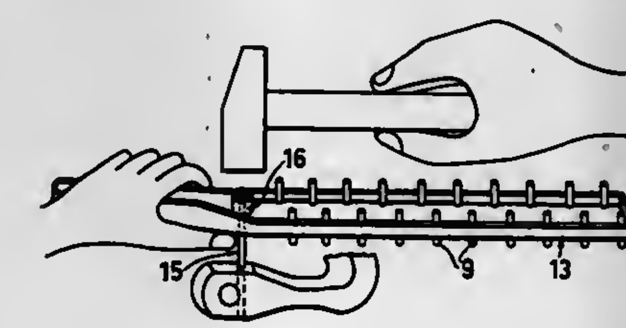

1. A tool for manual mounting and dismounting of composite chain slings comprising a suspension member having a load carrying stud or bolt and at least one locking pin for retaining such stud or bolt in said suspension member, said tool comprising in combination a self-supporting slatlike or plate-like holder for supply of locking pins, at least one row of apertures in said holder for releasably retaining said pins in said holder, and a grip or handle, wherein said holder comprises a drift pin for driving out locking pins which have been driven into an aperture in said suspension member, said drift pin being permanently secured to said holder and at one of its ends being provided with an enlarged head for receiving hammer blows and for preventing the drift pin from becoming displaced with respect to the holder due to such hammer blows.

4,301,590
METHOD OF ASSEMBLING AN INJECTION SITE TO A SUPPORT TUBE

Gary A. Ward, Round Lake, Ill., assignor to Baxter Travenol Laboratories, Inc., Deerfield, Ill.

Division of Ser. No. 19,399, Mar. 12, 1979, abandoned. This application Nov. 15, 1979, Ser. No. 95,186

Int. Cl.³ B23P *11/02*

U.S. Cl. 29—450 **2 Claims**

1. The method of applying a unitary, molded injection site formed of self-sealing, pierceable, resilient material to an end of a support tube, said injection site comprising a central, needle-receiving portion and a skirt portion contiguous therewith and extending, in its original, unstressed configuration, in a first direction therefrom, said method comprising:

heat sealing a needle-pierceable membrane across the outer end of said support tube and simultaneously flaring said outer end of the tube, prior to surrounding said end with said skirt portion;

temporarily convoluting said skirt portion in a direction opposed to said first direction out of its original, unstressed configuration into a portion about said central portion, to expose an inner surface of said central portion;

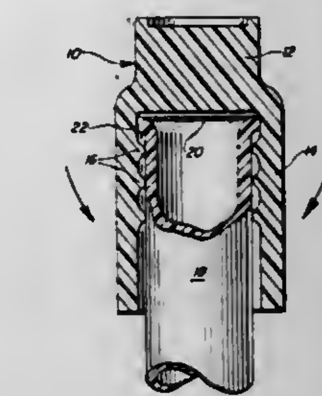

bringing said end of the support tube adjacent to said inner surface; and

bringing said skirt portion back toward its original, unstressed configuration with said skirt portion surrounding the end portion of said tube in telescoping relation, whereby said injection site is positioned on said support tube in relatively unstressed condition.

4,301,591
METHOD OF MANUFACTURING INFRA-RED DETECTOR ELEMENTS

Richard B. Withers, Romsey, England, assignor to U.S. Philips Corporation, New York, N.Y.

Filed Jul. 23, 1979, Ser. No. 59,831

Claims priority, application United Kingdom, Jul. 31, 1978, 31750/78

Int. Cl.³ H01C *7/08*

U.S. Cl. 29—572 **18 Claims**

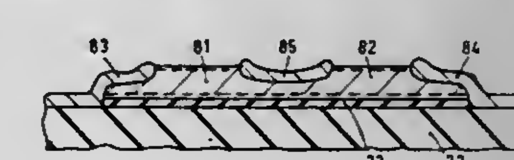

1. A method of manufacturing an infra-red detector element including the steps of:

(a) forming a masking layer on part of a surface of a body of infra-red sensitive material,

(b) using ion-etching to remove said material from said surface while using said masking layer as an etchant mask so as to form a mesa of infra-red sensitive material topped by said masking layer,

(c) depositing metal on said masking layer and on side-walls of said mesa, and

(d) removing the said masking layer to lift away the metal thereon and leave the metal on the side-walls of said mesa which forms separate electrodes on the side-walls of said detector element.

4,301,592
METHOD OF FABRICATING SEMICONDUCTOR JUNCTION DEVICE EMPLOYING SEPARATE METALLIZATION

Hung Chang Lin, 8 Schindler Ct., Silver Spring, Md. 20903

Division of Ser. No. 909,933, May 26, 1978, abandoned. This application Jan. 21, 1980, Ser. No. 113,574

Int. Cl.³ H01L *31/18*

U.S. Cl. 29—590 **5 Claims**

1. A method of contacting a semiconductor junction device

comprising the steps of forming a pn or an np junction on a doped semiconductor substrate of one conductivity type by creating a thin layer of opposite conductivity type on said substrate, depositing a layer of a metal on said substrate, heating said substrate and said metal at first temperature to form an ohmic contact, depositing a layer of the same metal on said thin

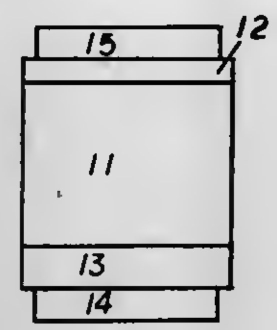

layer of opposite conductivity type, heating said substrate and said metal to a second temperature which is lower than said first temperature, said second temperature being sufficient to form an ohmic contact between said metal and said thin layer but insufficient to form an ohmic contact between said metal and said substrate.

4,301,593
ANTI-SPIN COUPLING FOR ORBITING DISC RAZOR
Russell P. May, P.O. Box 3241, Indialantic, Fla. 32903
Filed Dec. 28, 1979, Ser. No. 108,052
The portion of the term of this patent subsequent to Jan. 1, 1997, has been disclaimed.
Int. Cl.³ B26B *19/12*
U.S. Cl. 30—42 **4 Claims**

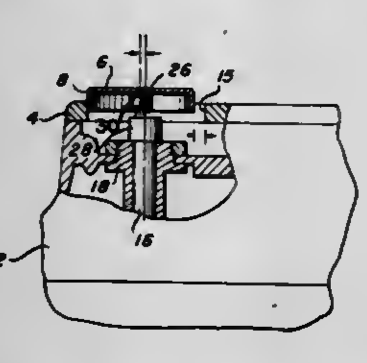

1. In a razor, head surface means having an annular raceway therein,
- a flat annular disc disposed in said raceway, the periphery of said disc being smaller than the diameter of said raceway, and
- means for imparting orbital motion to said disc in the plane thereof whereby said sharp edges slice along the skin surface against which one side of said disc is engaged, said means comprising,
- a socket on the other side of said disc,
- a ball engaging in said socket,
- a rotating drive shaft,
- a means mounting said ball on said drive shaft for rotation therewith, said means providing freedom of movement of said ball under centrifugal force to an extremity of eccentricity with respect to the rotational axis of said drive shaft, whereby to force the periphery of said disc against the raceway as said disc orbits.

4,301,594
HANDY ROTARY CUTTER
Yoshio Okada, Osaka, Japan, assignor to Okada Kogyo Kabushiki Kaisha, Osaka, Japan
Filed May 15, 1980, Ser. No. 149,955
Claims priority, application Japan, Oct. 18, 1979, 54-144516[U]
Int. Cl.³ B26B *25/00*
U.S. Cl. 30—164.95 **7 Claims**

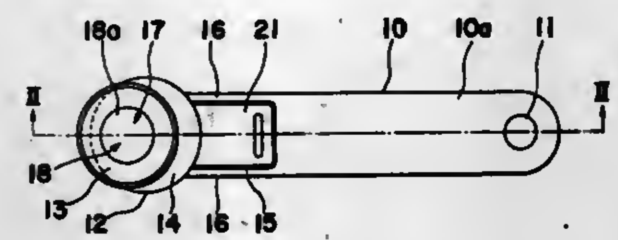

1. A rotary cutter comprising:
- an elongated handle having extending through one end thereof a bearing aperture;
- a shaft extending through said aperture and supported by said handle;
- a disc blade rotatably mounted on said shaft and lying in a plane extending perpendicular to the longitudinal axis of said shaft;
- a guard disc having a diameter greater than the diameter of said disc blade, said guard disc having therein a guide slot, said guard disc being mounted at said one end of said handle, with said shaft extending through said guide slot, for sliding movement in opposite directions longitudinally of said handle between an exposing position, whereat a portion of the periphery of said disc blade is exposed for cutting, and a concealing position, whereat said portion of said periphery is concealed by said guard disc; and
- means for adjustably applying a friction force to said disc blade in a direction substantially perpendicular thereto, and for thereby enabling said disc blade to be rotated in a controlled manner in contact with material to be cut.

4,301,595
CAN OPENER
Jozef T. Franek, Chorley Wood, England, assignor to Metal Box Limited, Reading, England
Filed May 7, 1980, Ser. No. 147,628
Claims priority, application United Kingdom, Jun. 14, 1979, 20818/79
Int. Cl.³ B67B *7/34*
U.S. Cl. 30—427 **10 Claims**

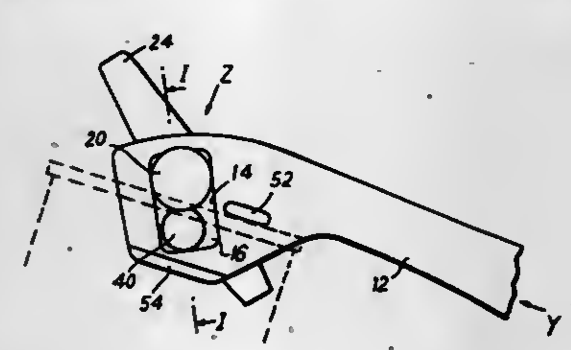

1. A can opener comprising a body, a cutter roll having a curved peripheral surface terminating in a circumferential cutting edge for engaging a circumferential outer wall of the double end seam of a can, an abutment projecting from one side of the body to engage on the top of the can seam, a traction roll having a peripheral surface for engaging on the top of said can seam, and means for rotating one of said rolls about its own axis, the abutment and said peripheral surface of the traction roll being tangent to a common first plane and the cutter roll being on the opposite side of said first plane from the traction roll, the traction roll further having a chuck wall engaging surface for engaging a chuck wall of the said can seam, the axis of the traction roll defining the intersection between a second plane parallel to said first plane and a third plane perpendicular to said first plane, said third plane being radial with respect to the can, the axis of the cutter roll defining the intersection between a fourth plane and a fifth plane, said fourth plane being perpendicular to said third plane and divergent from said second plane outwardly from said side of the body, a cutter incline angle in the range ten degrees to thirty degrees being defined between said second and fourth planes, said fifth plane being perpendicular to said first plane and convergent towards said third plane outwardly from said side of the body, and a cutter offset angle greater than zero being defined between said third and fifth planes, the curved peripheral surface of the cutter roll being such that a generator thereof is inclined, in the region where the cutting edge contacts the outer wall of the seam, from the cutting edge towards said first plane, whereby when the abutment and traction roll are engaged on the top of said can seam and the cutting edge with said outer wall thereof, and a said roll is rotated to effect relative circumferential movement between the opener and the can such that the centre of the cutter roll is behind the centre of the traction roll in the direction of relative movement of the opener, the cutting edge engages the can seam outer wall at an angle thereto substantially equal to the cutter incline angle to sever the outer wall with a cutting force having a substantially minor radial component and the outer peripheral surface of the cutter roll lifts and peels radially inwardly the served edge of the seam.

4,301,596
STUD TAPE MEASURE
Thomas Sedlock, R.D. #2,, Brockway, Pa. 15824
Filed May 22, 1980, Ser. No. 152,145
Int. Cl.³ G01B *3/04*
U.S. Cl. 33—494 **2 Claims**

1. A stud location tape comprising an elongated tape measure including opposite side longitudinal marginal edges, a first of said marginal edges including a first ascending linear measurement scale extending therealong beginning at one end of the said tape and ascending toward the other end thereof, the second of said marginal edges including a second ascending linear measurement scale having its lower end at said one end of said tape and ascending toward the other end thereof, said first and second scales each being in the same measurement increments and fractions thereof, the lower end of said second scale beginning, at said one end of said tape, at a predetermined fraction of the first increment of said first scale, said first and second linear measurement scales being readable from a single side marginal edge of said tape measure, said fraction of said first increment comprising $\frac{3}{4}$", said first scale including stud center marks thereon spaced predetermined distances apart along said tape and said second scale including pairs of opposite stud side surface marks thereon with the spacing between each pair of stud side surface marks being bisected by a corresponding stud center mark.

4,301,597
DIPSTICK
Minoru Midorikawa, Koganei, Japan, assignor to Nissan Motor Company, Limited, Yokohama, Japan
Filed Jun. 8, 1979, Ser. No. 46,686
Claims priority, application Japan, Jun. 23, 1978, 53-86251[U]
Int. Cl.³ G01F *23/04*
U.S. Cl. 33—126.7 R **1 Claim**

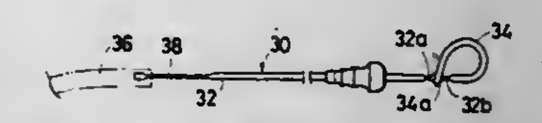

1. A dipstick for an automotive engine or transmission having an oil reservoir and a curved dipstick guiding conduit communicating with said reservoir, said dipstick being formed of a single length of wire and comprising:
- a generally straight main body;
- a handle portion bent into a loop, extending from said main body and terminating in an end fitted to said main body;
- said main body including a pair of axially spaced stopper portions which are formed into a thin, flat shape so as to project radially of said main body;
- the fitting end of said handle portion being wound round said main body between said stopper portions so as to be prevented from relative movement in the axial direction of said main body; and
- said wire being circular in cross-section, relatively small in diameter and possessing a relatively high resilience so that said main body can resiliently flex in all directions to easily follow said curved dipstick guiding conduit.

4,301,598
SINGLE FACED CORRUGATED WEB THICKNESS SENSING APPARATUS
Anthony N. Scardapane, Pennsauken, N.J., assignor to Molins Machine Company, Inc., Cherry Hill, N.J.
Filed May 23, 1980, Ser. No. 152,942
Int. Cl.³ G01B *5/06*
U.S. Cl. 33—147 L **10 Claims**

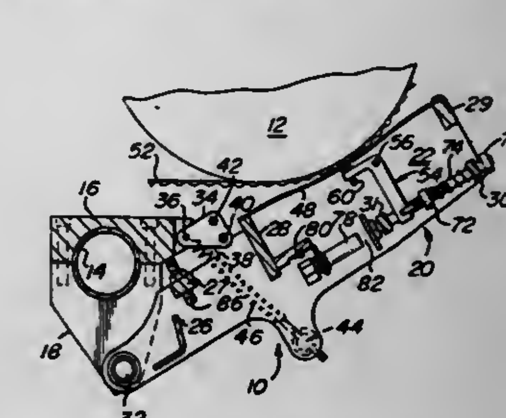

10. A method of sensing thickness of a corrugated web comprising:
- (a) contacting the smooth side of a single faced web with a curved guide surface,
- (b) flexing a resilient contact member so that a curved portion thereof is in contact with a plurality of adjacent corrugations on the opposite side of the web adjacent said guide surface,
- (c) biasing said contact member in a manner which tends to flatten out said curved portion, and
- (d) engaging said curved portion with a sensing member adapted to cooperate with a sensor capable of generating a signal.

4,301,599
LENS PREVIEWER
John Leay, New York, N.Y., assignor to Imero Fiorentino Associates, Inc., New York, N.Y.
Filed Oct. 5, 1979, Ser. No. 82,064
Int. Cl.³ G01C *3/00*
U.S. Cl. 33—277 **6 Claims**

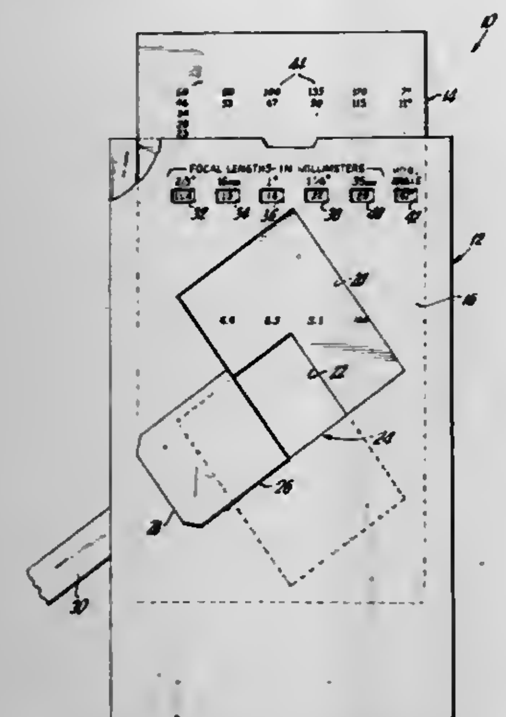

1. A device for previewing the field of view of an optical lens comprising:
(a) an opaque member having a rectangular aperture therein;
(b) means for adjusting the size of said aperture, including a second opaque member having a rectangular aperture therein, said second opaque member being slidably displaceable with respect to said first opaque member, the diagonal of said first and second rectangular apertures being oriented along a common line to thereby adjust the size of the aperture formed by said first and second apertures;
(c) means for spacing the eye of the user a predetermined distance away from said aperture; and
(d) indicia means disposed on said second opaque member, said first opaque member having means to indicate the appropriate portion of said indicia means for the user to thereby display the focal length of the lens providing a field of view corresponding to the field of view seen through said aperture.

4,301,600
LOCATING MECHANISM
Peter W. Charnley, South River, N.J., assignor to General Hardware Manufacturing Company, New York, N.Y.
Filed Feb. 22, 1980, Ser. No. 123,587
Int. Cl.³ B43L *7/06*
U.S. Cl. 33—464 **12 Claims**

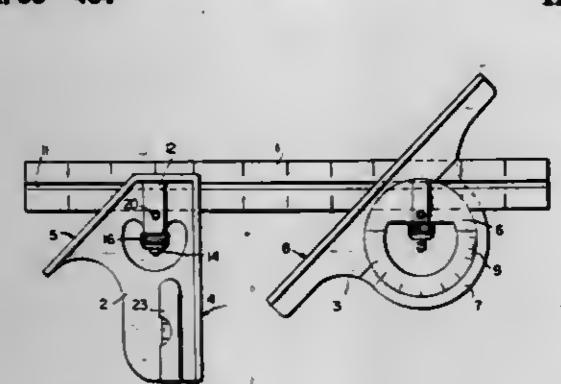

1. A locating mechanism comprising a body having a bore extending therethrough, an elongated pin seated and longitudinally displaceable within said bore, and a C-spring having a first end seated within a transverse bore in said pin and a second end accommodated in a registering bore in said body.

4,301,601
HAIR STYLING SYSTEM
Uriah H. Carr, 8852 S. Michigan Ave., Chicago, Ill. 60619
Filed Oct. 10, 1978, Ser. No. 949,875
Int. Cl.³ A45D *20/22*
U.S. Cl. 34—3 **15 Claims**

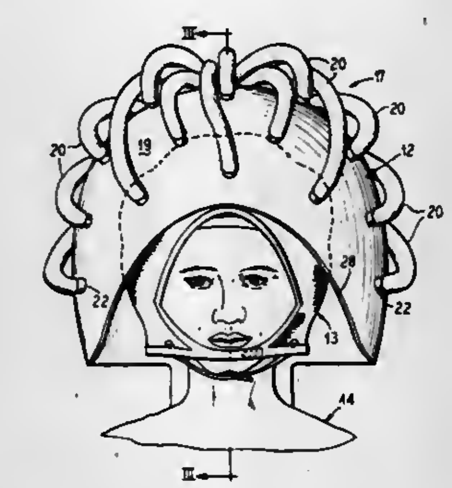

1. A hair styling system comprising:
(a) a resilient hair styling mold means for surrounding an individual's hair and having an inner surface with a contour corresponding to a desired hair style, said hair styling mold having means for permitting airflow through the inner surface, said hair styling mold being a separate cap structure receivable on a head of an individual and having substantial rigidity to maintain the inner fixed contour during drying;
(b) separate hood means dimensioned to freely receive the hair styling mold therein, said hood means having air-flow means for providing airflow through the hair styling mold for drying and setting the individual's hair; and
(c) said airflow means including a vacuum means for causing the airflow from areas adjacent the hair through the hair styling mold so as to draw the individuals hair towards and in contact with the mold means inner surface.

4,301,602
APPARATUS FOR TREATING A MOVING WEB
Edward A. Grondin; Lawrence R. Tulloch; Martin P. Perkins, Jr., all of Greenville; Alexander P. Krstovic, Easley; Bryon W. McCoy, Taylors, and Kevin P. Morey, Easley, all of S.C., assignors to Flatex, Inc., Greenville, S.C.
Continuation of Ser. No. 28,181, Apr. 9, 1979, abandoned. This application Jan. 8, 1981, Ser. No. 223,566
Int. Cl.³ F26B *13/30, 21/06*
U.S. Cl. 34—43 **8 Claims**

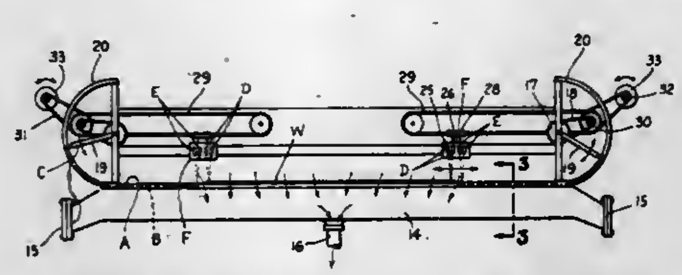

1. Apparatus having an elongated transverse suction slot for extracting liquid from a longitudinally moving web comprising:
an upper surface having a transverse opening therein defining said slot over which said web passes;
a transverse groove in each end portion of said slot;

an elongated transverse insert in said groove in each end portion of said slot blocking an end portion of said slot;
means extending outside the end of each end portion of said slot moving said insert transversely in and out responsive to movement of the web from side to side in its passage over said slot;
whereby an end portion of said slot uncovered by said movement of the web may be blocked to reduce suction required.

4,301,603
WATER IMPERVIOUS BOOT FOR PROTECTING A SURGICAL CAST
Dalbert B. Scott, 3201 Vista Cielo La., Spring Valley, Calif. 92077
Continuation of Ser. No. 26,318, Apr. 2, 1979, abandoned. This application Jul. 29, 1980, Ser. No. 173,766
Int. Cl.³ A43B *7/12;* **A61F** *13/00*
U.S. Cl. 36—110 **9 Claims**

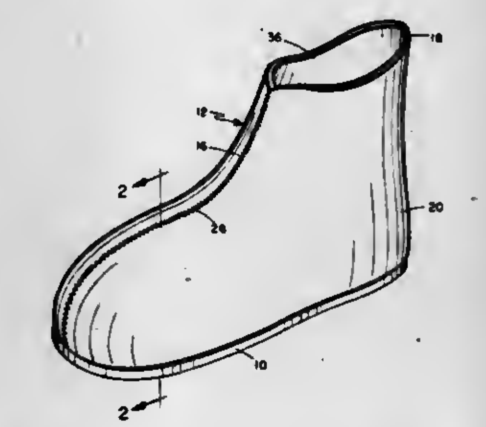

1. A water impervious boot for protecting a surgical cast comprising:
a walking sole of tough, flexible rubber-like material;
an upper body of elastic material shaped to enclose a casted foot and being peripherally sealed to said sole;
said body having a shell of resilient foam material with an outer layer of fabric integral therewith;
said body being in sections joined at at least one seam, each seam being adhesively bonded and stitched together by stitching through said outer fabric layer on both sides of said seam and into said resilient foam material without penetrating the inner surface of said foam material.

4,301,604
BOWLING OVERSHOE
Herbert M. Hamilton, 7422 Eddy St., Riverside, Calif. 92509
Filed Jul. 13, 1979, Ser. No. 57,205
Int. Cl.³ A43B *5/00*
U.S. Cl. 36—130 **6 Claims**

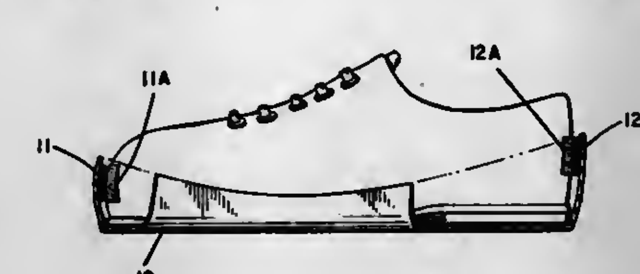

1. A protective overshoe arrangement comprising,
a flat, generally oval blank of a resilient, elastic material,
first fastening means disposed at one end of said blank and adapted to engage a counterpart fastening means on a shoe, and
second fastening means disposed at the other end of said blank and adapted to engage a counterpart fastening means on a shoe.

4,301,605
EXCAVATION AND TRANSPLANTING OF PLANTS WITH A BALL OF SOIL
Christopher J. Newman, Arbour House, Hemp La., Wigginton, Tring Hertfordshire, England (HP23 6HE)
PCT No. PCT/GB79/00020, § 371 Date Oct. 1, 1979, § 102(e) Date Sep. 24, 1979, PCT Pub. No. WO79/00575, PCT Pub. Date Aug. 23, 1979
PCT Filed Feb. 1, 1979, Ser. No. 166,977
Claims priority, application United Kingdom, Feb. 1, 1978, 4033/78
Int. Cl.³ A01G *23/06, 23/04*
U.S. Cl. 37—2 R **6 Claims**

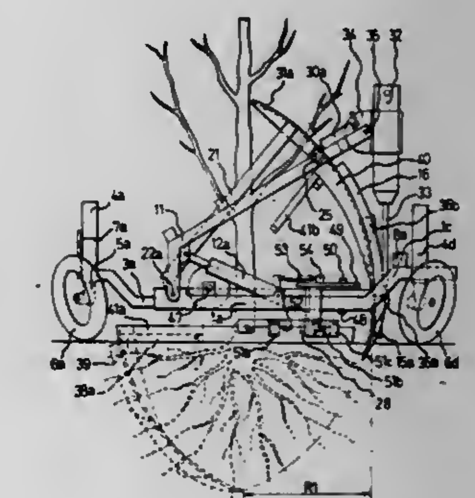

1. Plant transplanting apparatus, for transplanting a plant together with a ball of soil containing roots of the plant, comprising:
a plurality of curved blades each having a wide end, a pointed end, and a curved longitudinal axis extending from the wide end to the pointed end such that the longitudinal axes of a plurality of said blades have the same radius of curvature;
hammering means for driving the blades into the soil one at a time, and which is detachably engageable with the blades;
guide means detachably connectable with the blades, for guiding the blades as the blades are driven into the soil along curved paths so that the wide ends of a plurality of blades which have been driven into the soil lie on a closed loop, without necessarily engaging each other, and the blades form, at least partially, a cup-shaped container in which the wide ends of the blades extend around said closed loop and the pointed ends converge at or adjacent each other;
at least two bars rigidly connected to the wide end of each blade and projecting from a side of the blade on which the center of curvature of the longitudinal blade axis is situated so that adjacent bars of blades which are successively driven into the soil are adapted to overlie each other in intersecting relation; and
fastening means for securing the intersecting bars to each other to thereby hold the blades together after the blades have been detached from the hammering means and the guide means.

4,301,606
APPARATUS FOR EXCAVATING A TRENCH UNDERNEATH A PIPELINE INSTALLED ON THE SEA BOTTOM
Paul M. Hofmeester, Kristiansund, Norway, assignor to Netherlands Offshore Co., Delft, Netherlands
Filed Jul. 24, 1979, Ser. No. 60,173
Claims priority, application Netherlands, Jul. 31, 1978, 7808064
Int. Cl.³ E02F *3/88, 5/08*
U.S. Cl. 37—66 5 Claims

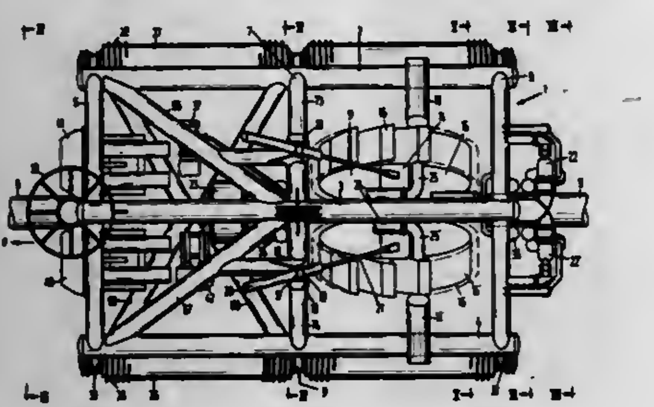

1. Apparatus for excavating a trench underneath a pipeline installed on the sea bottom, comprising:
a. a self supporting frame (1) resting on the bottom adjacent to the pipeline (9);
b. advancement means (26–29) supporting said frame and engaging the sea bottom;
c. guiding means (34, 35, 36) supported on said frame for guiding said frame exclusively in a lateral direction relative to the pipeline; and
d. two rotating bucket wheels (15, 15',16, 16') disposed side by side on either side of the pipeline (9) parallel to the direction of advancement (p), the main planes of said bucket wheels enclosing an acute angle with each other and intersecting each other underneath the pipeline, said bucket wheels being adjustable in height, said bucket wheels comprise an outer wheel (16) rotatably mounted on a stationary hub or stator (15), said wheel is further provided with a plurality of excavator buckets (58) having cutting edges (60) extending substantially in axial direction of the bucket wheel, the oppositely disposed sides of the excavator buckets are open, and each stator (15) being mounted on one end of a wheel arm (11) the opposite end thereof being pivotally connected to the frame, lifting means (17) are provided which on the one end engage on the frame and on the other end on said wheel arm (11), in order to bring the bucket wheels 15, 16 in the lowered or excavating position or the lifted position.

4,301,607
HYDRAULIC EXCAVATOR
Takayasu Imai, Osaka, Japan, assignor to Kabushiki Kaisha Komatsu Seisakusho, Tokyo, Japan
Filed Apr. 11, 1980, Ser. No. 139,336
Claims priority, application Japan, Apr. 18, 1979, 54-50699[U]
Int. Cl.³ E02F *3/32*
U.S. Cl. 37—118 R 3 Claims

1. A hydraulic excavator, comprising:
a vehicle having a mobile carriage and a rotary platform supported on said carriage;
a boom pivotally support at one end on said rotary platform for movement about a horizontal axis;
a stick pivotally connected at one end to the outer end of said boom;
a bucket pivotally connected to the other end of said stick;
hoist jack means pivotally connected at one end to the rotary platform of said vehicle and at the other end to said boom, said hoist jack means having a rod end and a head end chambers formed therein;
crowd jack means pivotally connected at one end to said boom and at the other end to said stick;
a lever pivotally mounted at one end on said stick for movement in a vertical plane;
a link pivotally connected at one end to said boom and at the other end to said lever;
bucket jack means pivotally connected at one end to said lever and at the other end to said bucket for controlling the attitude of said bucket; and

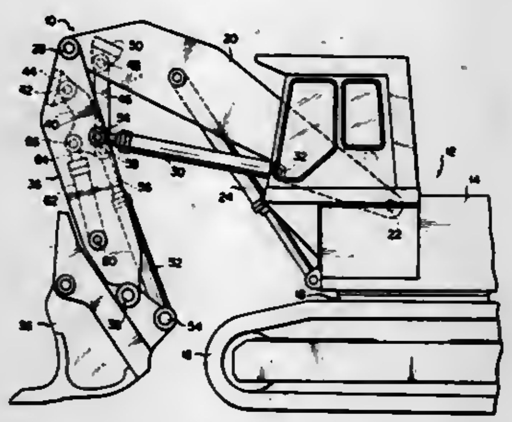

compensating cylinder means pivotally connected at one end to said lever and at the other end to said stick, said compensating cylinder means having a rod end and a head end chambers formed therein wherein the rod end chamber of said compensating cylinder means is communicated with the rod end chamber of said hoist jack means and the head end chamber of said compensating cylinder means is communicated with the head end chamber of said hoist jack means.

4,301,608
PHOTOGRAPHIC INSTRUCTION CARD HOLDER
Herbert N. Taylor, Jr., 10 Washington St., Hempstead, N.Y. 11550
Filed Mar. 1, 1979, Ser. No. 16,357
Int. Cl.³ G09F *3/18*
U.S. Cl. 40—16.4 9 Claims

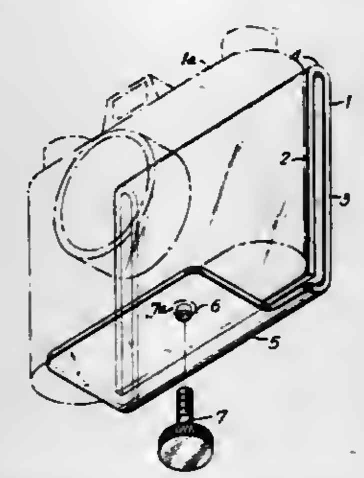

1. In a combination of a camera having a tripod socket to receive a tripod screw and a card holder suitable for attachment to said camera at said tripod socket, the improvement in which said card holder comprises a single-piece transparent material with two faces and a projection, having a rear face and folded from the top therefrom and in close proximity thereto a front face; and a section of said transparent material projection being substantially perpendicular to and rearward from the bottom of said front face and below said rear face, said section containing one complete circle hole in its midst, which hole is positioned to receive a tripod screw of a camera.

4,301,609
TRIGGER ASSEMBLY FOR BOLT ACTION PISTOLS
Ronald W. Peterson, Westminster, and Fred Jennie, Anaheim Hills, both of Calif., assignors to Weatherby, Inc., South Gate, Calif.
Filed Jul. 13, 1979, Ser. No. 57,408
Int. Cl.³ F41C *19/00*
U.S. Cl. 42—69 A 11 Claims

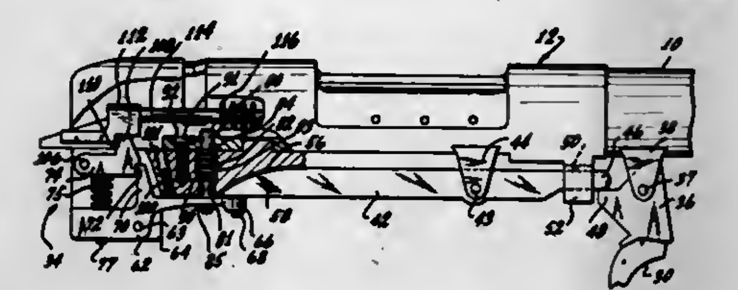

1. In a firearm, in combination, a trigger mechanism, a trigger positioned forwardly of the trigger mechanism, the trigger mechanism including a sear, sear actuating means including an elongated connector member, the connector member having a pivotal mounting at an intermediate position of the connector member whereby the connector member is restrained from movement along its length, the trigger being positioned to act on the connector member and to move it angularly, and means whereby a part of the connector member actuates the sear for firing by angular movement about its pivotal mounting.

4,301,610
FISHING LURE RETRIEVER
J. W. Brown, P.O. Box 61, Murfreesboro, Tenn. 37130
Filed Oct. 1, 1979, Ser. No. 80,764
Int. Cl.³ A01K *97/00*
U.S. Cl. 43—17.2 8 Claims

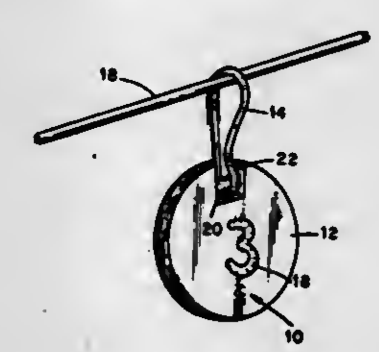

1. An apparatus for releasing an entangled fishing lure comprising:
a disc shaped body having a generally planar circular frontal portion and a generally planar circular rear portion connected by a generally annular side wall, said disc shaped body defining an opening therethrough between said frontal wall and said rear wall;
a pin disposed within and transversing said opening; and
connecting means rotatably disposed on said pin for quickly joining said disc shaped body to a fishing line.

4,301,611
FISHING LINE CASTER
Richard Lapinski, Fairfield West, Australia, assignor to Catuma Pty, Limited, New South Wales, Australia
Filed Jun. 18, 1979, Ser. No. 49,828
Claims priority, application Australia, Jun. 23, 1978, PD4846/78
Int. Cl.³ A01K *89/04*
U.S. Cl. 43—18 R 11 Claims

1. A fishing line caster comprising an elongate handle, a side casting spool disposed about one end of the handle, and a casting guide connected to the handle and forming an upstanding skirt extending about at least a portion of the periphery of the spool and spaced radially therefrom, the casting guide being formed with line positioning means adapted to initially maintain the line extending in a predetermined orientation relative to the casting guide outwardly of the longitudinal axis of the handle and with a weighted end of the line disposed

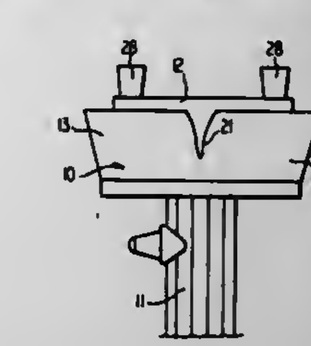

exteriorly of the skirt immediately prior to a line being cast from the fishing line caster, and said positioning means operating to release the line from the skirt upon casting to allow the line to pay out at least initially in a direction generally parallel to the longitudinal axis of the handle between the spool and the skirt.

4,301,612
LOBSTER TRAP
Stephen B. Ciulla, 21 MacKenzie La., Wakefield, Mass. 01880
Filed Jul. 12, 1978, Ser. No. 923,789
Int. Cl.² A01K *69/08*
U.S. Cl. 43—100 16 Claims

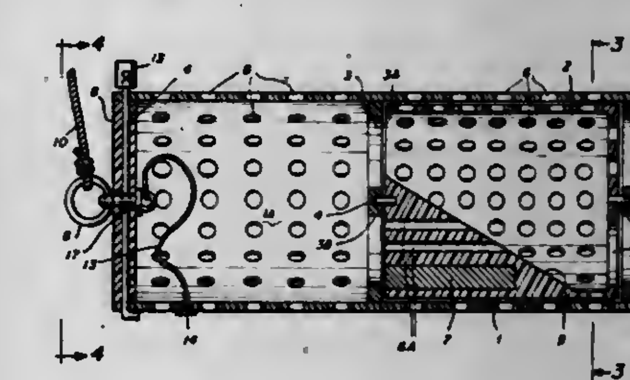

1. A lobster trap comprising;
an outer shell having water passage holes therein and including means at one end thereof defining an entrance and means at the other end thereof defining an access opening thereto,
removeable means for covering the access opening when the trap is to be used,
an inner shell having water passage holes therein and including entrance and exit means, said inner shell having a length less than the length of the outer shell,
means supporting said inner shell in said outer shell in proximity to the entrance to the outer shell,
and a ramp in said inner shell extending between the entrance and exit means thereof,
said means for supporting said inner shell including pivotal support means permitting pivotal rotation of the inner shell in the outer shell.

4,301,613
MARBLE ACTUATED TOY
William J. Koolstra, Sr., 9900 Riverview Dr., Kalamazoo, Mich. 49004
Filed Jul. 21, 1980, Ser. No. 170,951
Int. Cl.³ A63H *29/08*
U.S. Cl. 46—42 4 Claims

1. A marble actuated toy having a main wheel rotatable

about a horizontal axis and having an initial marble receiving notch formed in its periphery, followed in angularly spaced trailing relation relative to the rotation of the wheel by a second booster marble receiving notch in the periphery of the wheel,

a marble feed chute supported over the periphery of the wheel and having a gate at its lower end, a drive wheel connected in co-axially spaced relation to said main wheel and having interrupted tooth means around a portion only of its periphery, an intermediate marble transfer chute positioned elongside of said main wheel and vertically between the axis of said wheels and the upper periphery of the main wheel, an upright rack bar having an elevator platform on its upper end and teeth drivingly engagable with the tooth means on said drive wheel to lift said platform from adjacent marbel receiving relation with said intermediate chute to delivery relation to said feed chute, and trip pins on the side of said main wheel associated

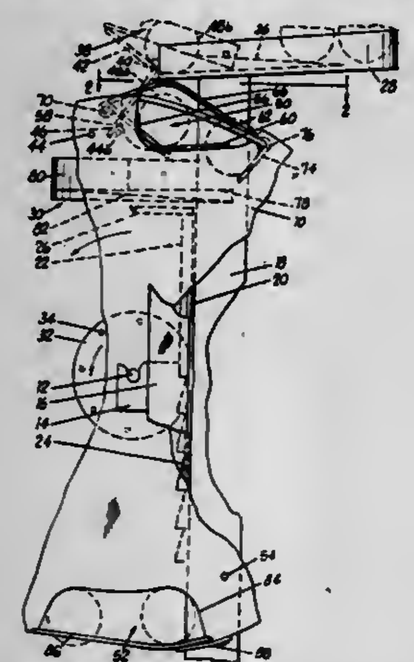

with said notches to open said gate and deliver a marble to each of said notches as each notch moves under said feed chute, said toy being characterized by:

a pair of marble support wires secured in spaced parallel relation to each other and to the side of said main wheel and extending peripherally of said wheel from end to end of said initial marble receiving notch,

and stops at each end of said support wires extending axially of said main wheel and radially inwardly relative to said main wheel to engage a marble at each end of said support wires,

said support wires being bowed outwardly in their mid-sections beyond the periphery of said main wheel,

the leading end of said initial marble receiving notch leading the leading end of said booster notch by substantially less than 180 degrees,

the elevation of said intermediate transfer chute and the lowermost position of said elevator being over one half the radius of said main wheel above the axis of the wheels.

4,301,614
TOY AIRPLANE AND METHOD FOR MAKING SAME
Wood A. Newton, 1013 Maplehurst, Nashville, Tenn. 37204
Filed Dec. 19, 1979, Ser. No. 105,087
Int. Cl.³ A63H 27/00, 33/00
U.S. Cl. 46—79 **33 Claims**

1. A toy glider airplane for being constructed from the generally planar material comprising:

a drinking straw having a forward end and a rearward end;

a plurality of wing structures constructed from the generally planar material of the container;

first means for mounting at least one of said wing structures on the forward end of said straw to form a forward main wing of the toy glider airplane for providing lift during flight;

second means for mounting at least one of said wing structures on the rearward end of said straw for controlling the orientation of the toy airplane during flight;

a forward slit formed in the forward end of said straw;

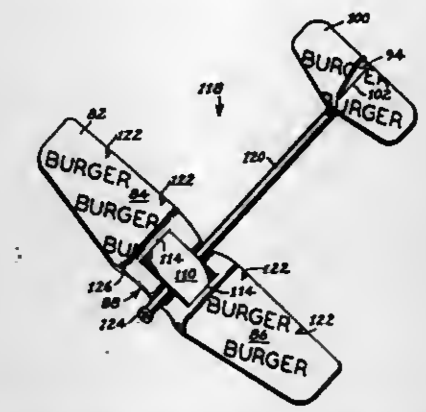

a pair of opposing tab slits formed in said forward main wing on either side of and equidistantly from said straw; and

a tab inserted through said forward slit and said tab slits to secure said wing structure to said straw to form the forward main wing on the airplane.

4,301,615
TOY HAVING MEMBER CAPABLE OF GOING FROM A FIRST POSITION TO A SECOND POSITION AND AUTOMATICALLY RETURNING TO THE FIRST POSITION
Masaki Ikeda, Tokyo, Japan, assignor to Tomy Kogyo Co., Inc., Tokyo, Japan
Filed Dec. 6, 1979, Ser. No. 100,892
Claims priority, application Japan, Dec. 7, 1978, 53-151823
Int. Cl.³ A63H 13/02
U.S. Cl. 46—105 **12 Claims**

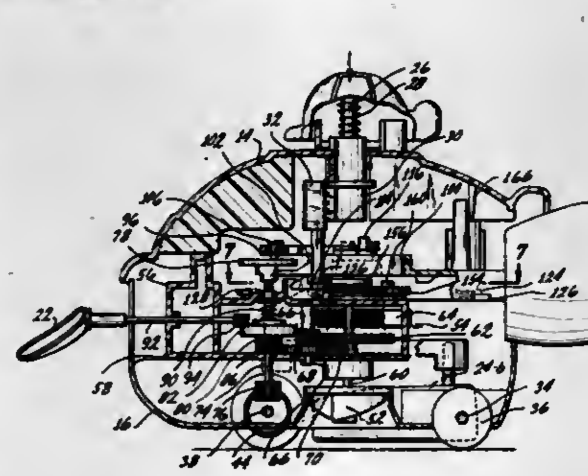

1. A toy comprises:

a body;

a movable member located in association with said body said movable member mounted on said body to move between a retracted position wherein said movable member is generally located inside of said body and an extended position wherein at least a portion of said movable member is extended outwardly from said body;

retraction means operatively associated with said movable member for moving said movable member from said extended position to said retracted position, said retraction means including a retraction activation means, said retraction activation means movably mounted on said body and including at least a portion of said retraction activation means being exposed outside of said body;

retaining means operatively associated with said retraction activation means and alternately associated with said movable member and disassociated with said movable

member, said retaining means capable of in a first instance associating with said movable member retaining said movable member in said extended position and in a second instance disassociating from said movable member so as not to retain said movable member in said extended position;

said exposed portion of said retraction activation means capable of being stimulated by the operator of said toy and when stimulated disassociating said retaining means from said movable member causing said retraction means to move said movable member from said extended position to said retracted position;

automatic extension means operatively associated with said movable member and capable of detecting when said movable member is in said retracted position and in response to said movable member being in said retracted position to automatically move said movable member back to said extended position and reassociate said retaining means with said movable member.

4,301,616
ILLUMINATED FRISBEE TOY
Terry J. Gudgel, 15 Highmanor Dr., #8, Henrietta, N.Y. 14467
Filed Nov. 19, 1979, Ser. No. 95,595
Int. Cl.³ A63H 33/26
U.S. Cl. 46—228 **9 Claims**

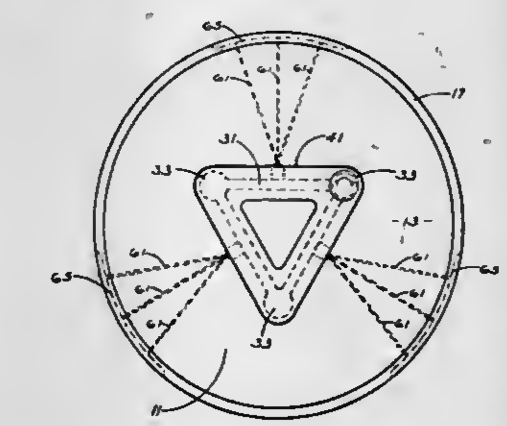

1. A toy of the Frisbee type comprising a circular body of generally dished shape having a rim, a plurality of light sources mounted on said body at points spaced substantially inwardly from said rim and arranged symmetrically with respect to the center of said body and closer to the center of the body than to the rim, and a plurality of light conductors extending from locations near each of said light sources to points on said rim, said light conductors being in the form of relatively thin optical filaments set in grooves in a face of said body and not projecting appreciably from such face, so that such face presents a relatively smooth grasping surface to a player attempting to catch the toy while it is rotating.

4,301,617
MODEL STEAM LOCOMOTIVES
Christopher W. Shaw, Starfitts House, Kirkbymoorside, York, N. Yorkshire, England
Filed Aug. 27, 1979, Ser. No. 69,837
Claims priority, application United Kingdom, Aug. 30, 1978, 34919/78
Int. Cl.³ A63H 19/10
U.S. Cl. 46—257 **6 Claims**

1. In a model of a steam locomotive including an electric drive motor connected to drive said locomotive and a model reproduction of a valve gear which, in the real locomotive, regulates a steam control valve of a steam cylinder for controlling the pulling power of the locomotive, the improvement comprising means for continuously changing the configuration of said model valve gear in accordance with the required pulling power and direction of movement of said model for positioning said model valve gear to substantially correspond to that of the real locomotive when operating under similar conditions, said means comprising torque responsive means responsive to the torque and the direction of torque of said electric motor for producing a movement indicative of said torque and its direction, and means connecting said torque responsive means to said model valve gear for changing the configuration and position of the model valve gear, to substantially correspond to that of the real locomotive, in response to said movement.

4,301,618
GROWING FRAME
Patrick L. August, 82 Mariposa Ave., Watsonville, Calif. 95076
Filed Aug. 11, 1980, Ser. No. 176,928
Int. Cl.³ A01G 17/06
U.S. Cl. 47—46 **3 Claims**

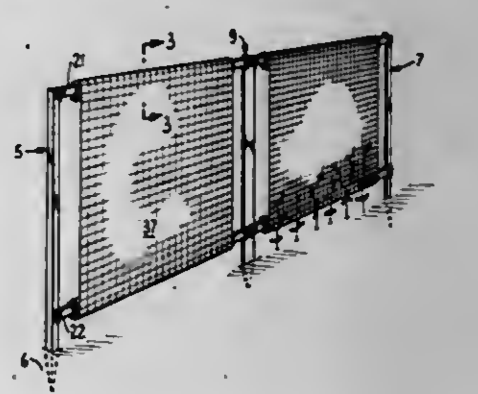

1. A growing frame for plants including in combination:

A. a plurality of posts designed to be placed in the ground in a generally vertical position, each post having a front face,

B. holes near the top and bottom in the front faces of said posts for the reception of bolts,

C. upper and lower horizontal members, each said horizontal members having a first laterally enclosed slot means opening to each end thereof and a second slot of arcuate configuration for netting attachment and opening to the front surface of said horizontal members, said posts and said horizontal members forming a frame,

D. links bolted to the upper and lower holes of said posts, said links extending into said enclosed slot means,

E. a plastic netting material wrapped around and attached to each of said horizontal members, whereby said netting is stretched between said upper and lower members to form said growing frame.

4,301,619
PLANT TISSUE PRODUCED BY NON-AGRICULTURAL PROLIFERATION OF CACAO EMBRYOS
Jules Janick, and Valerie C. Pence, both of West Lafayette, Ind., assignors to Purdue Research Foundation, West Lafayette, Ind.
Continuation-in-part of Ser. No. 951,267, Oct. 13, 1978, Pat. No. 4,204,366. This application Jan. 11, 1980, Ser. No. 111,196
Int. Cl.³ A01G 1/00
U.S. Cl. 47—58 **2 Claims**

1. Cotyledonary tissues of asexual embryos produced by the following steps:

(A) proliferation of immature zygotic cacao embryos in a basal medium in the presence of a growth enhancer

whereby asexual embryos are initiated upon said zygotic embryos; and

(B) growing said asexual embryos in vitro in a basal medium;

(C) harvesting the cotyledonary tissue of said asexual embryos.

4,301,620

METHOD OF PROMOTING WATER TRANSPORT THROUGH SOIL

Evan E. Koslow, Westport, Conn., and J. Samuel Batchelder, Pasadena, Calif., assignors to Koslow Technologies Corporation, Westport, Conn.

Filed May 8, 1980, Ser. No. 147,911

Int. Cl.³ C09K *17/00*

U.S. Cl. 47—58 **29 Claims**

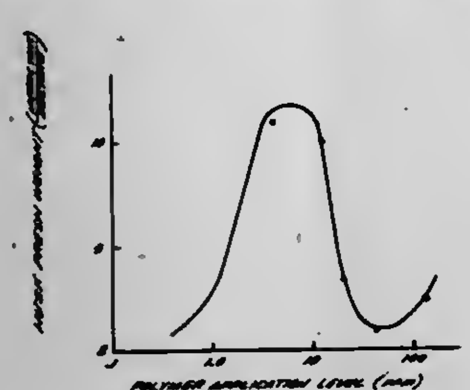

1. A method of promoting and controlling the transport of water through medium and coarse grained soils comprising the step of applying to medium or coarse grained soil a soil amendment composition at a level of at least 0.05 but less than 5 parts per million parts by weight of dry soil, said composition comprising a substantially linear, substantially water-soluble hydrophilic polymer of ethylene oxide having a molecular weight greater than 50,000.

18. A method of promoting and controlling the transport of water through medium and coarse grained soils comprising the step of applying to medium or coarse grained soil a soil amendment composition at a level of at least 0.05 bnt less than 20 parts per million parts by weight of dry soil, said composition comprising a substantially linear, substantially water-soluble hydrophilic unsubstituted polymer of ethylene oxide having a molecular weight greater than 50,000.

4,301,621

ANTI-CLOSING DEVICE FOR DOORS WHICH AUTOMATICALLY OPEN AND CLOSE

Hans-Hermann Houwelling, Cologne, Fed. Rep. of Germany, assignor to Gebr. Bode & Co., Kassel, Fed. Rep. of Germany

Filed Apr. 4, 1980, Ser. No. 137,374

Claims priority, application Fed. Rep. of Germany, May 3, 1979, 2917797

Int. Cl.³ E05F *15/00*

U.S. Cl. 49—27 **18 Claims**

1. An anti-closing device for use with a powered door driven between open and closed positions for opening the door when in the course of being closed the door encounters an obstacle, said device comprising switch means having an actuated state for producing a signal to reverse a drive and open a closing door, a flexible pull means mounted in spaced relation in proximity to a free edge of the door and operatively connected to said switch means for operating the same when the door encounters an obstacle, a plurality of sleeves arranged in a row around said pull means and having adjoining edges in abutment with one another, and means applying tension to said pull means to hold the same in an initially taut state, said pull means being coupled to said sleeves such that when the door encounters the obstacle the sleeves pivot on one another and the pull means is deflected to actuate the switch means, said adjoining

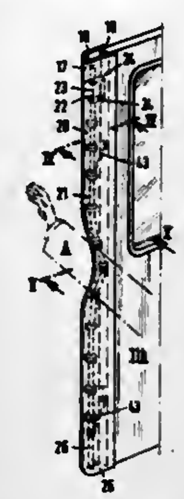

edges of said sleeves having outer diameters substantially greater than the diameter of the pull means.

4,301,622

CASEMENT WINDOW OPERATING MECHANISM

Forrest L. Dunsmoor, Atlanta, Ga., assignor to Peachtree Doors, Inc., Norcross, Ga.

Filed Jun. 27, 1980, Ser. No. 163,698

Int. Cl.³ E05F *11/24*

U.S. Cl. 49—342 **8 Claims**

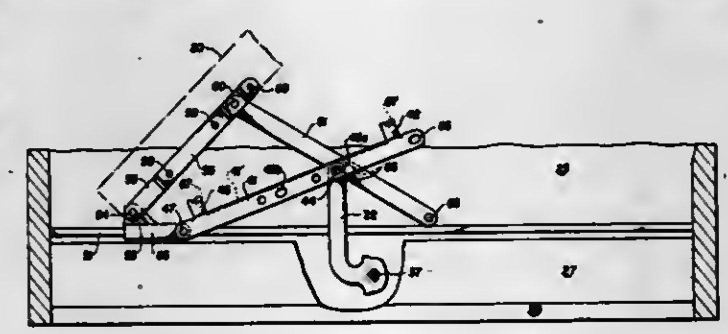

1. An operating mechanism for casement windows and like swinging closures comprising a drive gear adapted to be mounted centrally of a window opening and having an operating arm which can swing through a sufficient arc of movement to operate a casement window sash in either left hand or right hand mode, an operator link coupled with said operating arm to be shifted thereby and carrying near opposite ends lateral locking projection means, a slide pivotally coupled with one end of the operator link and being engageable with a linear guide at the bottom of the window opening, a pivot link having one end pivotally coupled to said slide and adapted for attachment to the bottom of a casement window sash, and a stabilizer link having one end pivotally coupled to the pivot link near the end of the latter distant from the slide and adapted to have its opposite end pivotally attached to the bottom of the window opening, said locking projection means on one end portion of the operator link moving into engagement with the opposing edge of the stabilizer link during the final stages of window sash closing movement to boost such movement and to automatically lock the sash in the fully closed position.

4,301,623

SEMIAUTOMATIC SLIDING DOOR DEVICE WITH TENSION SPRING

Enzo Demukai, Higashi-Osaka, Japan, assignor to Nippon Door Check Mfg. Co., Ltd., Osaka, Japan

Filed Dec. 5, 1979, Ser. No. 100,530

Claims priority, application Japan, Dec. 11, 1978, 53-153301; Dec. 11, 1978, 53-170552; Jan. 10, 1979, 54-001906

Int. Cl.³ E05D *15/06*

U.S. Cl. 49—404 **13 Claims**

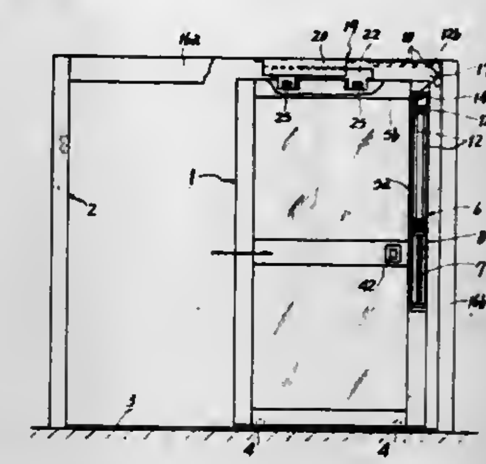

1. A semiautomatic sliding door device with a tension spring comprising:

a sliding door,

a frame structure for slidably guiding the door between the open position and closed position of the door,

a coiled tension spring carried by one of two elements consisting of the sliding door and the frame structure for urging the door toward the closed position, the spring having its one end fixed to said one of the two elements and its other end connected through a wire to the other of the two elements,

guide means carried at least by said one of the two elements for guiding the wire, and

braking means comprising a braking plate of copper or aluminum fixed to the sliding door and a braking magnet unit fixed to the upper frame of the frame structure and having a pair of magnetic surfaces opposed to each other with a clearance and provided by one or two permanent magnets, the magnetic surfaces having an identical row of plural magnetic poles alternately inversely magnetized, every pair of opposed magnetic poles on the magnetic surfaces having opposite polarities, and the braking plate being adapted to pass through the clearance adjacent the closed position of the sliding door.

4,301,624

GRINDING HEADS

Pierre A. Largeteau, Bezons, France, assignor to S.A. Automobiles Citroen and Societe Automobiles Peugeot, both of Paris, France

Filed May 21, 1979, Ser. No. 41,186

Claims priority, application France, May 30, 1978, 78 16680

Int. Cl.³ B24B *5/08*

U.S. Cl. 51—34 J **5 Claims**

1. A device for controlling the expansion of a grinder of a grinding head, the expansion of which grinder is obtained by means of a cone rigid in translation with an expansion rod, said device comprising a fluid-operated ram of differential action type, said ram having a piston connected to the expansion rod, and means for slaving the piston in position, said means comprising a fluid valve and means for driving the valve, said drive means comprising a program-controlled stepping motor, the valve being a slide valve comprising a valve slider and means defining a threaded bore in the slider, said drive means further comprising a control screw engaged in the threaded bore, and a sliding drive-transmitting member, said control screw being drivingly connected to the motor via the drive-transmitting member such that rotation of the motor effects an axial displacement of the valve slider, and a bracket rigid with the

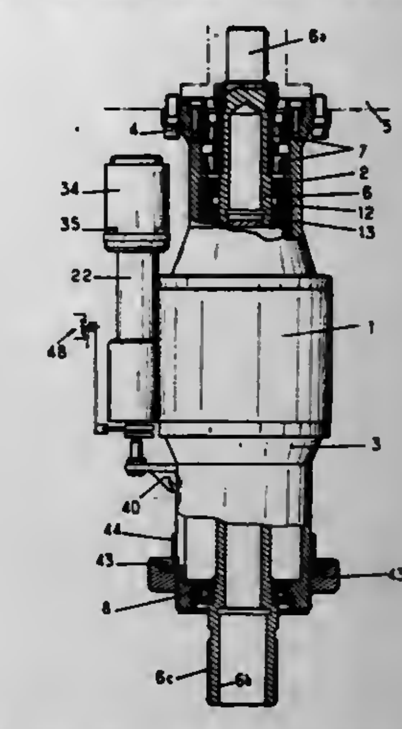

piston of the ram, and roller elements mounting said control screw in said bracket such that the control screw moves axially with the piston but is rotatable relative to the piston.

4,301,625

BOWL-TYPE VIBRATORY FINISHING MACHINE

John F. Rampe, Mayfield Heights, Ohio, assignor to Rampe Research, Cleveland, Ohio

Continuation-in-part of Ser. No. 893,630, Apr. 5, 1978, Pat. No. 4,184,290, which is a continuation-in-part of Ser. No. 714,823, Aug. 16, 1976, Pat. No. 4,091,575. This application Sep. 6, 1979, Ser. No. 73,001

Int. Cl.³ B24B *31/06*

U.S. Cl. 51—163.2 **34 Claims**

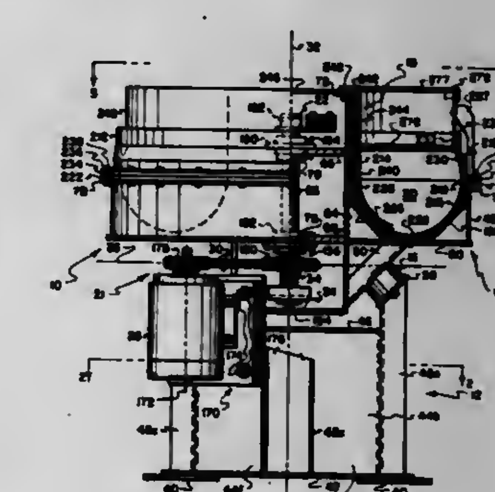

1. A bowl-type vibratory finishing machine, comprising:

(a) a base structure;

(b) a bowl structure having a central axis and defining a substantially annular chamber adapted to receive finishing media and workpieces to be finished;

(c) a plurality of elastomeric mounts movably supporting the bowl structure on the base structure, each of the mounts having one portion secured to the bowl structure and another portion secured to the base structure, the one and another portions defining an axis for each mount;

(d) drive means for vibrating the bowl structure relative to the base structure to impart a finishing action to contents of the chamber with the bowl structure moving substantially about a nodal point on the central axis; and

(e) the elastomeric mounts positioned such that their axes intersect the central axis at a point on one side of the nodal

point, the point of intersection being located above the nodal point.

4,301,626
INFLATABLE HEAT BARRIER
Donald L. Davis, Mount Laurel, and Adolph J. Strohlein, Jr., Moorestown, both of N.J., assignors to Effective Conservation Systems, Inc., Dayton, Ohio
Filed Jun. 9, 1980, Ser. No. 157,580
Int. Cl.³ E04B *1/34*
U.S. Cl. 52—2 **2 Claims**

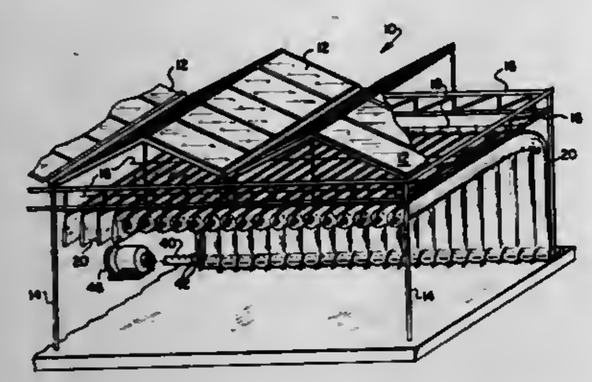

1. In combination with an existing, enclosed building structure having a substantially continuous roof, the improvement comprising:
a plurality of elongated tubular members transformable between an inflated, substantially circularly cross-sectioned configuration and a deflated, non-circularly, cross-sectioned pendant configuration of substantially the same peripheral cross-sectional dimension as said circular configuration,
each of said tubular members including an inflatable main body portion and a substantially flat, uninflated attaching flange projecting outwardly from said main body portion,
means for suspending said tubular members by said attaching flanges beneath and in spaced relationship to said substantially continuous roof, whereby said tubular members are protected by said roof,
said tubular members in said inflated configuration thereof having a greater portion thereof positioned closer to said roof than in said deflated pendant configuration thereof,
an apertured conduit for selectively maintaining said tubular members in said inflated condition,
ends of said main body portions of said tubular members being slit inwardly to form opposed pairs of flaps, and
said flaps extending about said tubular conduit to place it in communication with said main body portions of said tubular members.

4,301,627
GUARD RAILS FOR PORTABLE STAGES
Kermit H. Wilson, Edina, Minn., assignor to Sico Incorporated, Minneapolis, Minn.
Filed Aug. 17, 1979, Ser. No. 67,409
Int. Cl.³ E04G *1/26*
U.S. Cl. 52—6 **7 Claims**

7. In combination:
a stage having elevating legs and a stage surface member supported by said legs, said stage surface member including a framing flange and extending outwardly beyond said legs and said flange, and
a protective barrier for the edge of a stage having elevating legs and a stage surface member supported by said legs, said surface member including a framing flange and extending outwardly beyond said legs and said flange, comprising, in combination:
a top rail member;
a pair of spaced posts having top ends, secured to and projecting from said rail member, and generally parallel inner faces;
a support member connected to said inner faces of said posts at sites spaced from said rail member to interconnect said sites for gravitationally engaging the surface member along the entire length of said support member; and
hook member connected to said posts at sites more remote from said rail member than said support member, and extending inwardly and then generally toward said rail member, the inward extension of said hook members being substantially the same as the distance from the outer edge of said surface member to the inner edge of said framing

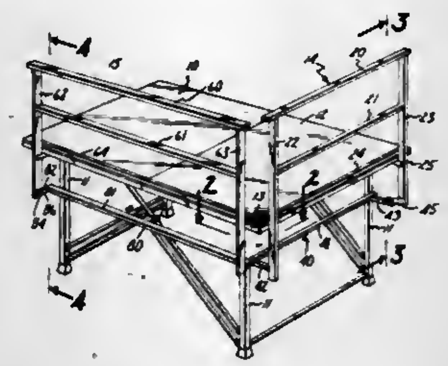

flange, said hook having an upward extension, said inner extension of said hook member being spaced from said flange to provide clearance between said hook members and said flange for removing said barrier from said stage; and
locking means affixed to said barrier at a point more remote from said rail than said hook members for applying a force in a horizontal direction to bias said upward extension against the flange so that said barrier is rigidly affixed to said stage.

4,301,628
FRAMELESS METAL BUILDING AND BUILDING COMPONENTS
Colin F. Lowe, 5518 Aspen, Houston, Tex. 77081
Continuation-in-part of Ser. No. 969,342, Dec. 14, 1978, which is a continuation-in-part of Ser. No. 931,854, Aug. 7, 1978, Pat. No. 4,221,087, which is a continuation-in-part of Ser. No. 831,781, Sep. 9, 1977, Pat. No. 4,106,245. This application Jul. 23, 1979, Ser. No. 59,575
Int. Cl.³ E04B *7/02*
U.S. Cl. 52—90 **13 Claims**

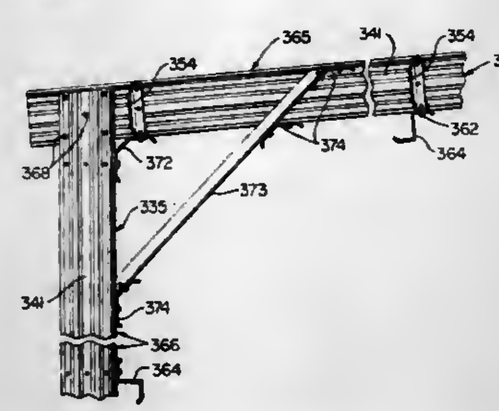

10. A metal building comprising a pitched roof assembly supported by generally vertical wall assemblies, said roof assembly and at least one of said wall assemblies each including a plurality of assembled elongated panels, said panels being formed by bent sheets of metal forming substantially flat inner skin portions connected to substantially flat outer skin portions by substantially flat spaced web portions to define parallel spaced and longitudinally extending primary corrugations, said inner and outer skin portions having a plurality of laterally spaced and longitudinally extending secondary corrugations being substantially smaller than said primary corrugations, a plurality of spacer members disposed within said primary corrugations of said panels between said web portions, means

securing each said spacer member to said web portions of the corresponding said primary corrugation, said outer skin portions of said wall panels having upper portions with recesses receiving said web portions and said inner skin portions of said roof panels, said web portions and said inner skin portions of said wall panels projecting upwardly into corresponding said primary corrugations of said roof panels, a series of fasteners connecting adjacent said web portions of said roof and wall panels, a series of inclined eave panels extending between said wall panels and said roof panels, and each of said eave panels having a portion projecting into one of said primary corrugations and having a width generally equal to the width of said primary corrugations.

4,301,629
HOLE SEALING WATER-TIGHT PLUG
Steve M. Farr, Bedford Heights, Ohio, assignor to James Cooksey, Tulsa, Okla.
Filed Jun. 27, 1979, Ser. No. 52,606
Int. Cl.³ E04B *1/00;* E04G *21/00*
U.S. Cl. 52—99 **38 Claims**

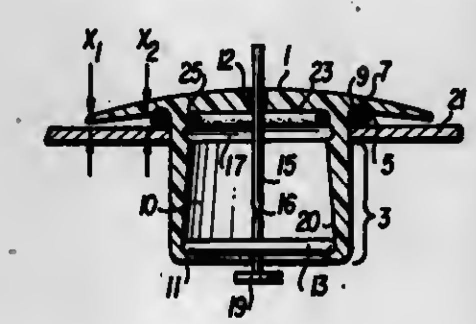

1. A plug for closing and sealing holes in a surface comprising:
a head portion of predetermined outer dimensions having on one side thereof an outer surface adapted to abut a surface defining the periphery of a hole; and,
a projection extending from said head portion at said one side for insertion into said hole, said projection including means for radially expanding at least a portion of said projection into engagement with the inside periphery of said hole to hold said plug in said hole, said projection comprising a resilient extension of said head portion on said one side, the interior wall of said extension tapering outwardly toward the interior periphery of a hole to be sealed along the axis of said extension from said head portion to the end of said extension, and said means for radially expanding said projection comprising a plate movable axially of and within said extension and disposed perpendicularly to said axis, said interior wall of said extension engaging with the outer edge of said plate, means for axially moving said plate from a rest position at the end of said extension toward said head portion along said interior wall causing expansion of an exterior peripheral wall of said extension, and at least one locking means spaced between the distal end of said extension and said head portion for retaining said plate in a predetermined locked position.

4,301,630
METHOD AND APPARATUS FOR LIFT-SLAB BUILDING CONSTRUCTION
Raymond A. Burkland, Cove Run Farm, P.O. Box 9A, Lemont Furnace, Pa. 15456
Filed Aug. 8, 1979, Ser. No. 64,868
Int. Cl.³ E04B *1/35*
U.S. Cl. 52—126 **14 Claims**

1. Apparatus for constructing a concrete building framework of a plurality of floors and at least one supporting column on a previously prepared ground slab that includes an upwardly projecting starting column for each supporting column, and a stack of at least two previously prepared releasably serially interconnected floor slabs supported on the ground slab and having said starting column projecting up through vertically registered holes through each said floor slab, said apparatus comprising:
a tubular, upright column form with a side wall having substantially the same transverse cross-sectional size and shape as the starting column so that the column form may be initially placed on the uppermost floor slab with the starting column projecting part way up into the column form;
said column form side wall having a lining of resilient material;
means releasably connecting the uppermost one of said floor slabs to said column form;
a removable plug for closing the upper end of the column form and for leaving the upper end of the column form

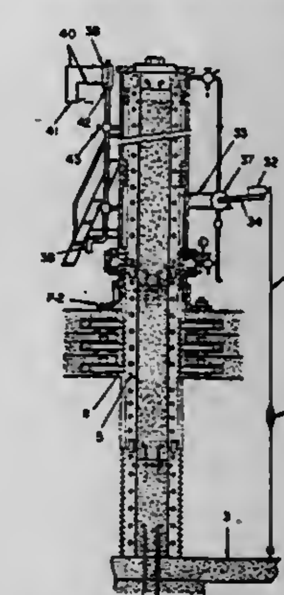

open for when settable concrete is being introduced into the form to make an increment of columns;
a toroidal gasket means provided on said column form adjacent the lower end of said side wall, for forming a seal against such increment of the starting column or column being formed as lies radially adjacent said toroidal gasket means;
means for introducing pressurized hydraulic fluid into the column form annularly between the column being formed and said side wall lining, so that with said removable plug installed, the column form may be caused to hydraulically lift relative to the column being formed, thus also lifting the stack of floor slabs, so that as each floor's complement of column is formed, the then lowermost, lifted floor slab may be detached from the stack secured to the column and left behind as the column form is further lifted, until the uppermost floor slab is thereby fully lifted and connected to the thus-completed column.

4,301,631
WATER COOLING JACKET FOR PROTECTION FROM FIRE
Michiji Tazaki, 3-3-46, Haraichi, Annaka City, Gunma Prefecture, Japan
Filed Dec. 17, 1979, Ser. No. 103,909
Int. Cl.³ E05G *1/02;* E04B *1/94*
U.S. Cl. 52—168 **6 Claims**

1. A water cooling jacket for fire comprising:
inner and outer side cases installed with a given interval therebetween;
a water tank mounted on a ceiling of said side cases;
means for forming a water pool case capable of gathering waters outside the outer side case;
an outer wall-plate covered on the inside thereof with fiber

plates such as glass wools or the like spaced with an interval from the outside of the outer case; and

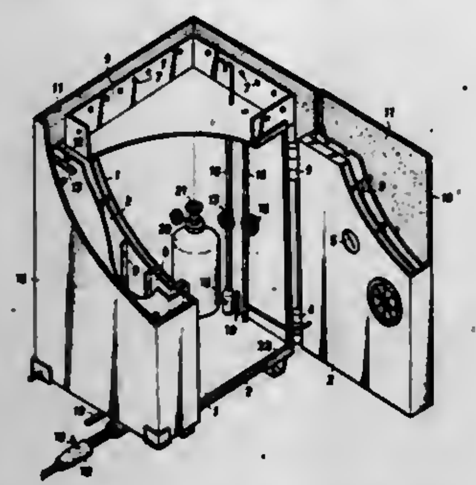

means for making waters flowing from said water tank and said water pool case fall down along the outer wall-plate continuously.

4,301,632
PREFABRICATED MODULE AND METHOD FOR MAKING ARCHWAYS THROUGH BUILDING INTERNAL WALLS
James A. Wagner, 1818 Twin Ridge Blvd., Omaha, Nebr. 68105
Filed Apr. 20, 1979, Ser. No. 32,011
Int. Cl.³ E06B *1/04*
U.S. Cl. 52—211 10 Claims

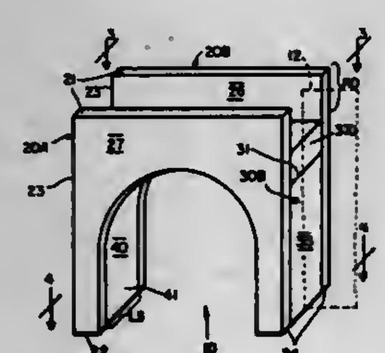

1. Module for defining the upper portion of an arbitrarily shaped archway through the interior wall of a building having neighboring vertical studs of finite longitudinal-spacing and exceeding the width of the intended archway and having thereatop a longitudinally extending horizontal top-plate having parallel upright shoulders of finite vertical-depth and of finite lateral-separation, said prefabricated and installable module comprising:

A. a pair of parallel upright panels maintained in said finite lateral-separation with internal bracing means located between and attached to said upright panels, the respective panels having co-elevationally aligned horizontal top-edges and co-elevationally aligned bottom-edges whereby there is a module constant vertical-height between the panels' aligned top and bottom edges which is less than the studs' finite vertical-elevation, the respective panels also having aligned vertical first-edges and vertical second-edges defining therebetween a module constant longitudinal-length that is substantially equal to said longitudinal-spacing;

B. said internal bracing means being relegated to a recessed-depth below said panels' top-edges to provide a module overhand portion substantially equivalent to said vertical-depth for fastening alongside both upright shoulders of the top-plate environment, said internal bracing means including a pair of parallel and longitudinally spaced apart rails having vertical inner-faces and outer-faces, the rails' respective outer-faces being conterminous the panels' vertical edges and being juxtaposable along for abutting attachment to upper portions of the two neighboring studs, and each of said rails having a bottom-end conterminous the panels' bottom-edges; and

C. arbitrarily shaped archway delineating means attached to both vertical panels and laterally extending therebetween whereby the archway delineating means is of linearly generated contour and its lateral-extent is constant and substantially equivalent said lateral-spacing, said archway delineating means being confined between the vertical rails and having finite lower-length portions in closely spaced relationship along the rails' vertical inner-faces.

4,301,633
SHINGLE-TYPE BUILDING ELEMENT
Peter Neumann, Eschen, Liechtenstein, assignor to Isopag AG, Liechtenstein, Fed. Rep. of Germany
Filed Oct. 25, 1979, Ser. No. 87,978
Claims priority, application Fed. Rep. of Germany, Apr. 30, 1979, 2917516
Int. Cl.³ E04D *3/35, 3/365*
U.S. Cl. 52—309.4 10 Claims

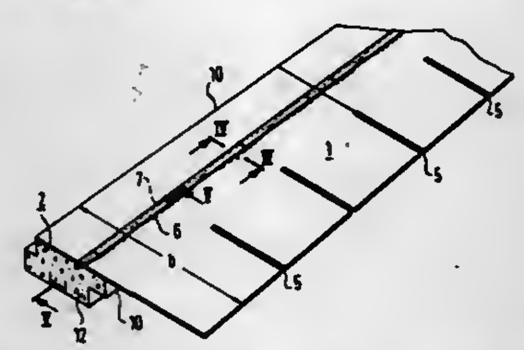

1. A shingle type element of a shape which is adaptable to mate with other identical shingle elements to form a joint shingle structure, said element comprising:

an upper member having a width b in the front to rear direction and a height h,

a lower member of an expanded plastic material, said lower member comprising an upper triangular part ABC with point B at the rear end of the upper member, side AC being on the front and equal in height to h, and wherein width b of the upper part is more than twice the length of line BC, said lower member including a lower part, the bottom of which is substantially parallel to line AB,

a reinforcing element in the form of an elongated track embedded in the plastic material of the lower member and running generally perpendicular to the front to back direction thereof,

and a securing means for securing together the upper and lower members, said securing means including:

a securing strip of material running along the bottom of the upper member, said securing strip having first parts fixed to the upper member, said strip having other parts extending down into the plastic material and embedded therein, such that at least some plastic material is present between some portions of the other part and the upper member to securely hold together the upper and lower members.

4,301,634
MANUFACTURE OF TILES
John W. Shore, Over Alderley; James H. Eyres, Paignton, and Kenneth Critchley, Swinton, all of England, assignors to Pilkington's Tiles Limited, Manchester, England
Continuation of Ser. No. 937,178, Aug. 28, 1978, abandoned. This application Jan. 28, 1980, Ser. No. 116,236
Int. Cl.³ E04F *13/08*
U.S. Cl. 52—389 4 Claims

1. An assembly of ceramic tiles for interior walls and ceilings made up of a plurality of tiles arranged in rows, each and every tile of said assembly selectively being either a field tile or a

border tile, each tile comprising: a four sided glazed face and edges; and projecting glazed spacing lugs on each edge of the tile and extending upwards substantially one half the thickness of the tile from the base and having a width of approximately 0.05", adjacent tiles employed es field tiles being assembled with the glazed lugs on one tile abutting the glazed lugs on the adjacent tiles and long glazed lugs extending substantially the

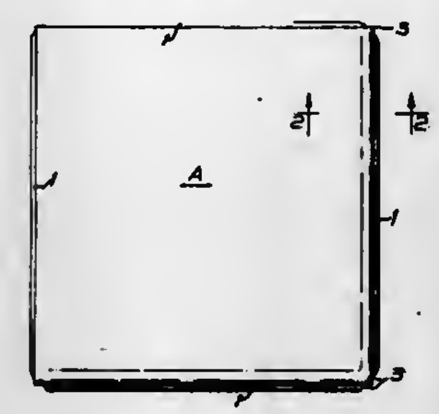

whole length of at least two sides of each tile whereby the same glazed edge tiles may be employed as field or border tiles, said tiles being employed as field tiles being arrangeable in any conceivable random fashion with respect to abutment of adjacent edges thereof, the glazed lugs providing compressible portions which will crush to take up initial movement on any settling movement of the building so that the tiles do not leave the wall.

4,301,635
COMPOSITE JOISTS, JOIST ASSEMBLIES AND BUILDING PANELS INCLUDING SUCH JOIST ASSEMBLIES
Garry J. Neufeld, Kelowna, Canada, assignor to Nu Floor Co. Ltd., Kelowna, Canada
Filed Nov. 14, 1979, Ser. No. 94,148
Int. Cl.³ E04B *5/10, 5/14*
U.S. Cl. 52—483 7 Claims

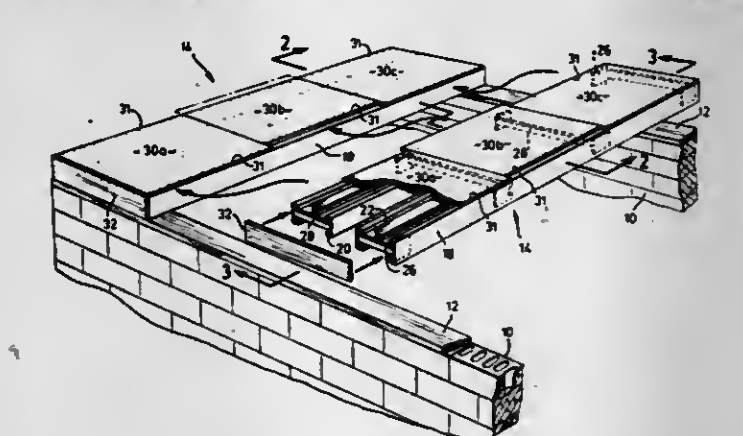

1. A joist assembly comprising:

two individual parallel elongated metal channel members both of U cross-section disposed with the channel open mouths facing one another and adapted to be disposed with the parallel channel cross webs vertical and the opposed parallel channel side walls horizontal, the channel side wall of each member having returned stiffening webs parallel to said web and defining edges of the open mouth, and

a plurality of spaced stiffening assemblies disposed along the length of the assembly, each stiffening assembly comprising two stiffening members connected by a transverse connecting member,

each stiffening member being disposed wholly within the channel and being of a height to extend between and engage the opposed channel sidewalls and to be provided with restraining in its disposition by said returned webs to provide corresponding vertical stiffening to the channel member, wherein the stiffening member of each stiffening assembly is a panel of wood.

4,301,636
RIGID SHELF CONNECTOR
Steven R. Luria, 1008 Willard Dr., Blacksburg, Va. 24060
Filed Mar. 21, 1980, Ser. No. 132,653
Int. Cl.³ E04C *1/10, 1/30*
U.S. Cl. 52—584 10 Claims

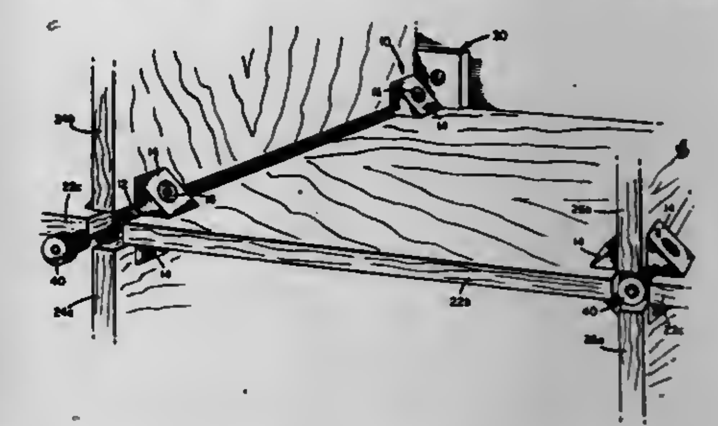

1. A connector means for releasably attaching together a plurality of substantially planar elements in a predetermined angular relationship, by gripping edge portions of the respective elements, said connector means comprising a core member having a central axis, at least three gripping members, and means attaching the gripping members to the exterior of the core member in peripherally spaced positions, in a manner allowing radial adjustment of at least two of said gripping members relative to said core member, adjacent pairs of gripping members each defining opposed surfaces for tightly gripping the edge portions of said substantially planar elements therebetween when said at least two of said gripping members are suitably radially adjusted with respect to said core member.

4,301,637
QUICK STACK BUILDING BLOCK
Thomas W. Anderson, 1209 Boxwood La., Apex, N.C. 27502
Filed Sep. 17, 1979, Ser. No. 75,963
Int. Cl.³ E04C *2/04*
U.S. Cl. 52—594 1 Claim

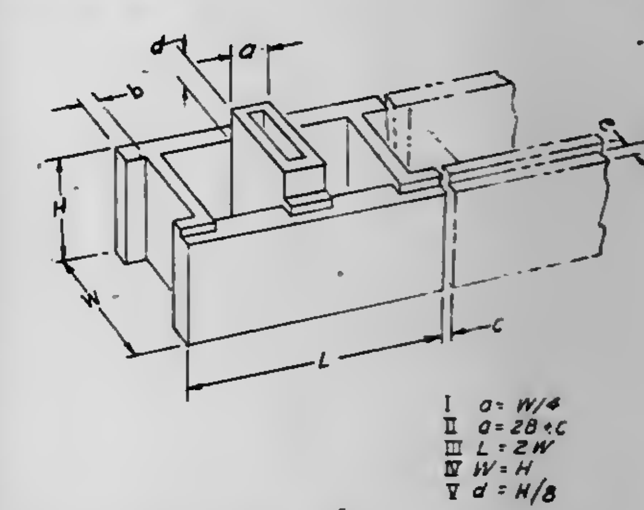

1. A generally rectangularly shaped building block comprising:

a pair of vertical, opposite, side walls;

a pair of vertical, opposite, end walls traverse of said side walls;

a pair of opposite upper and lower longitudinally extending faces formed by the top and bottom surfaces of said side and end walls;

a generally rectangular wall structure extending centrally across said block between said side walls, and said central

wall structure being spaced from said end walls and extending above said upper face of the block and having therein a generally rectangular cavity extending vertically completely through said wall structure; and

each end wall including extensions of said side walls for a distance conforming to one-half the longitudinal thickness of said rectangular wall structure, whereby,

with multiple courses of laid block, and with a half block stagger of blocks, as between courses, blocks of one course and blocks between courses are interlocked by an upwardly extending portion of said wall structure into indentations between blocks of an upper course of said blocks, and there exists three full cavities: said cavity formed by said wall structure, and two cavities between it and said side walls and said end walls, wherein after blocks are laid, mortar can be introduced into said three cavities in the construction of a block wall.

4,301,638

SPACER FOR REINFORCED CONCRETE STRUCTURES

Hartzell H. Schmidgall, Mediapolis, Iowa, assignor to Hawkeye of Iowa, Ltd., Mediapolis, Iowa

Filed Feb. 11, 1980, Ser. No. 120,206

Int. Cl.³ E04C *5/16*

U.S. Cl. 52—687 **2 Claims**

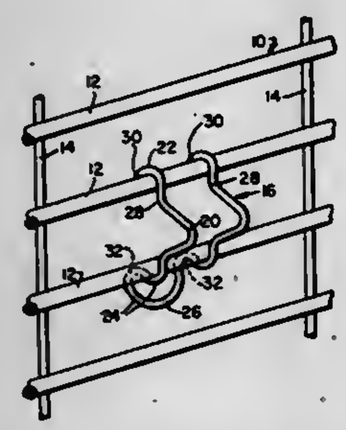

1. For use with a concrete reinforcing mesh having parallel wires: a spacer for attachment to the wires and including a projection for locating a point on a surface spaced from the mesh, the spacer being an elongated member positionable with its length crosswise of the wires and having a first hook means at one end for hooking over one wire of the mesh and a second S-shaped hook means at the other end for hooking over a second parallel wire to retain the spacer on the mesh by the resilient reaction force between the S-shaped hook and the second wire, characterized in that the spacer member is of hairpin shape having a bight and a pair of parallel, coplanar legs extending from the bight to respective terminal end portions, said terminal end portions forming duplicate hooks constituting the first hook means and the junction of the legs with the bight forming duplicate S-shaped hooks constituting the second hook means, each S-shaped hook having its portion that merges into the bight extended in prologation of the member and combining with the bight to form a looped lever arm receivable of a force-applying tool between the looped lever arm and the outside face of the mesh, for facilitating the application of force to the bight end of the spacer to cam the S-shaped hooks over the second wire during installation of the member on the mesh, said member being formed of relatively heavy-guage spring steel capable of gripping the wires without permanent distortion of itself.

4,301,639

APPARATUS AND METHOD FOR PRODUCING A CONTAINER FOR FOOD AND THE LIKE

Joel A. Hamilton, 101 Hardenburgh Ave., Demarest, N.J. 07627

Continuation-in-part of Ser. No. 19,462, Mar. 9, 1979, abandoned. This application Oct. 1, 1979, Ser. No. 80,685

Int. Cl.³ B65B *9/04, 1/02*

U.S. Cl. 53—456 **21 Claims**

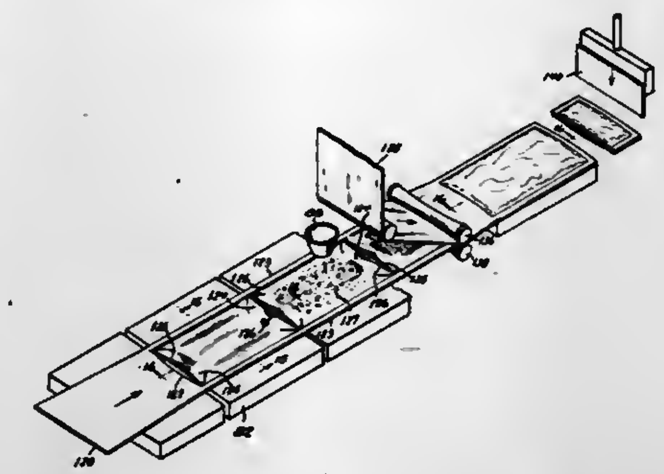

1. Apparatus for the in-line production of a package for a product which may be granular, solid, semisolid, liquid and/or combinations thereof, said produced package including a lower member of material being capable of retaining its shape once it has been formed and a cover member, said members having facing surfaces adapted for sealing one to the other, said apparatus including:

(a) means for feeding and supporting a lower member of determined width and of a long length of sheet material;

(b) means for forming a plurality of substantially transverse cuts in said lower member and at substantially equal and regular intervals, these cuts being less than the width of the lower member thereby leaving side carrier portions on the lower member;

(c) means for forming a trough in said lower member, said trough having substantially the same surface width in the lower member as the length of said transverse cuts;

(d) die shaping means for forming an end stop on each side of each transverse cut and with these end stops and the trough providing a product receiving pocket, said end stops being formed in the lower member absent heat and stretching of said member so that the integrity of all wall portions of the pocket remain substantially unchanged in their travel through the apparatus;

(e) means to feed a desired quantity of product to and into the formed pocket of the lower carrier;

(f) means for attaching a cover member to the rim portions around the pocket to retain the product in the pocket, and

(g) means for severing the sealed pockets into separate packages.

4,301,640

CONTAINER CLOSING MEANS AND PROCESS

Richard G. Haas, South Haven, Mich., assignor to Brown Company, Kalamazoo, Mich.

Filed Nov. 9, 1979, Ser. No. 92,689

Int. Cl.³ B67B *1/04;* **B65B** *7/28*

U.S. Cl. 53—478 **11 Claims**

1. A machine useful for fastening a closure member to a container with an upstanding tubular wall, an end edge of which is folded over onto itself to form a folded-over, reinforced portion of double thickness at that end, said closure member having an upstanding tubular inner wall conforming to the inner surface of the folded-over, reinforced portion and a downstanding tubular outer wall connected thereto and conforming to the outer surface of said folded-over, reinforced portion, thereby forming a closure assembly comprising a

tubular channel in which said folded-over, reinforced portion is seated in frictional engagement, which machine comprises:

pincer-like means for pinching together selected portions of said closure assembly comprising punching-point means and anvil means disposed on axially opposed portions of the jaws of said pincer-like means;

container-positioning means for positioning said closure assembly with said tubular channel disposed between the jaws of said pincer-like means and said anvil means, with the upstanding wall thereof opposed to one of the said

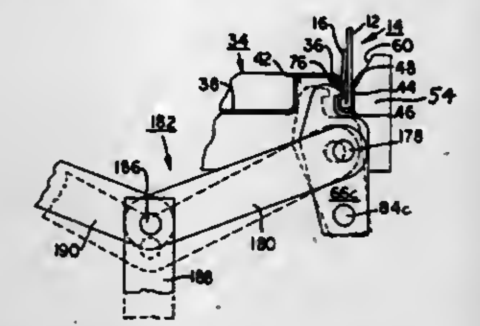

punching-point means and the downstanding wall thereof opposed to the other; and,

pinching means for moving said jaws to pinching position, comprising wedging means acting on said pincer-like means to close said jaws and to cause the wall portions of the tubular channel at said selected portions of said closure assembly to be pinched into the folded-over, reinforced portion in said channel and pressure-applying means acting on said wedging means to cause it to exert pressure on said pinching means and through the same on the pinched-in portions of said closure assembly.

4,301,641

ARTICLE TRANSFER APPARATUS

Merle G. McElwain, Felton, and Gary D. Keckler, New Oxford, both of Pa., assignors to Caterpillar Tractor Co., Peoria, Ill.

Filed Sep. 2, 1980, Ser. No. 183,510

Int. Cl.³ B65B *57/14, 5/10*

U.S. Cl. 53—493 **8 Claims**

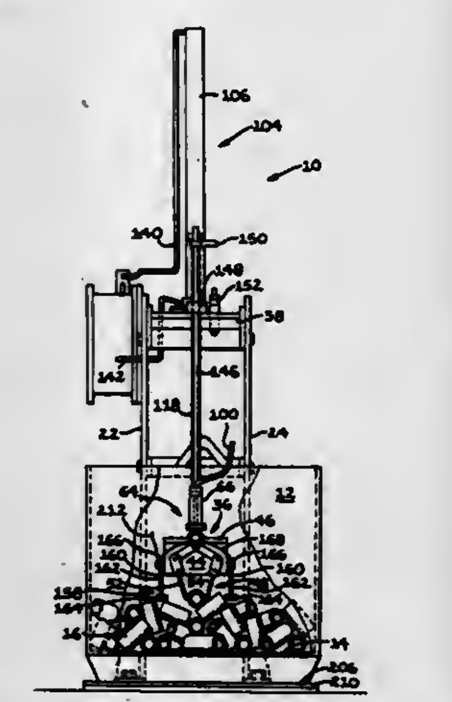

1. In an article transfer apparatus (10) for sequentially transferring electrically conductive articles (16), said apparatus (10) having a frame (20), a vertically movable carriage (36) disposed within the frame (20), means (104) for moving the carriage (36) between a predetermined first position and a varying second position, and means (64) for discharging the articles (16) from the carriage (36) and into a container (12) in response to said carriage (36) being at the second position located a preselected distance above one of the bottom of the container (12) and articles (16) within the container (12), the improvement comprising:

first means (158) for sensing the location of said varying second position and delivering a signal in response to said means being at said varying second position, said first means (158) being a plurality of spaced apart flexible members (160) depending from said carriage (36);

second means (170) for receiving said delivered signal and discharging said article (16) in response to receiving said signal, said signal being an electrical signal passing from said first means (158) through the container (12) and to the second means (170); and,

sensor means (154) for detecting the presence of an article (16) in said carriage (36) in response to said carriage (36) being at the first position.

4,301,642

SAFETY ROTOR FOR MOWER

Stephen H. Thurber, 532 E. Campbell Ave., Sherrill, N.Y. 13461

Filed Feb. 11, 1980, Ser. No. 120,362

Int. Cl.³ A01D *55/18*

U.S. Cl. 56—12.7 **22 Claims**

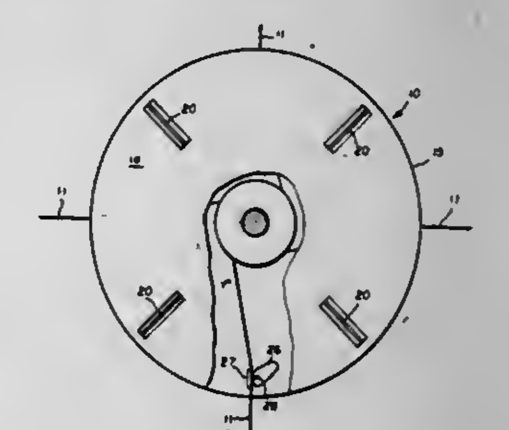

1. A safety rotor for a rotary lawn mower having a mower shaft and a blade turned by said shaft to cut a swath equal to the length of said blade, said rotor comprising:

a. a hollow, generally closed body having a generally smooth exterior;

b. said hollow body being formed to fit on said mower shaft so said body can be secured to said mower shaft to rotate in place of said blade for said mower;

c. said body having a circular perimeter with a diameter between 0.5 and 0.9 times said swath of said mower;

d. a plurality of strands extending radially outward from said perimeter of said body far enough to cut to the full width of said swath;

e. spools arranged within said body to supply said plurality of strands for feeding radially outward to replenish said strands;

f. strand control means arranged within said body to be moved by centrifugal force between a first position assumed during slow rotation and a second position assumed during fast rotation; and

g. said strand control means being arranged for feeding said strands radially outward while moving from said first position to said second position and for moving from said second position to said first position without retracting said strands.

4,301,643
AGRICULTURAL MOWERS

Alfred J. Bailey; Malcolm Dean, both of Coventry, and Norman J. A. Bruce, Moreton Morrel, all of England, assignors to Massey-Ferguson Services N.V., Curacao, Netherlands Antilles

Filed Feb. 29, 1980, Ser. No. 126,047

Claims priority, application United Kingdom, Mar. 6, 1979, 07723/79

Int. Cl.³ A01D *55/26*

U.S. Cl. 56—13.6 6 Claims

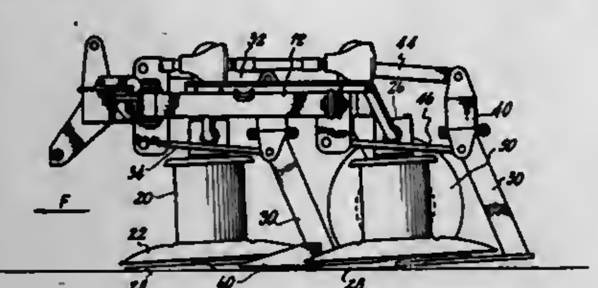

1. An agricultural mower having a frame, at least one forward rotary cutter supported from below on a skid assembly suspended from the frame, at least one rear rotary cutter supported from below on a skid assembly suspended from the frame so that in operation the rear rotary cutter is to the rear and to one side of the forward rotary cutter, drive means mounted on the frame for rotating each rotary cutter about a generally vertical axis, and a crop guide secured to the skid assembly supporting the forward rotary cutter including a support wall the rear portion of which is adjacent to the rear rotary cutter, the support wall being operable to support uncut crop material so that the rear rotary cutter can cut the supported uncut crop material adjacent the ground.

4,301,644
ATTACHMENT FOR COMBINE HARVESTER

Grant L. Henderson, Rte. 1, Box 74, Summerville, Oreg. 97876

Filed Jan. 16, 1980, Ser. No. 159,940

Int. Cl.³ A01D *14/02, 45/02*

U.S. Cl. 56—14.3 21 Claims

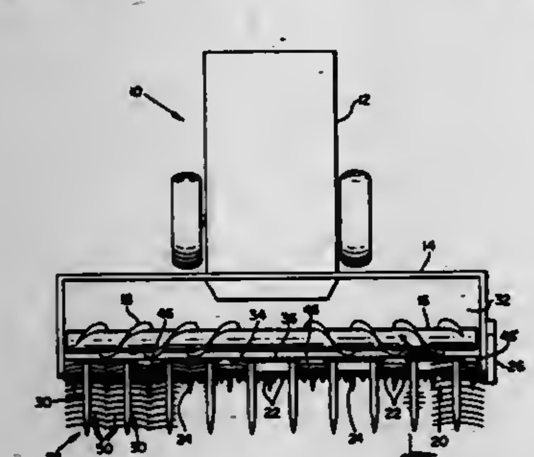

1. In a grain harvesting machine,

a substantially horizontal and forwardly moving grain receiving pan and a plurality of oscillating knife elements extending along a forward edge of said grain receiving pan for cutting grain for reception in said pan,

a plurality of grain engaging means for delivering the grain toward said knife elements during forward travel of said harvesting machine, said grain engaging means comprising forward members extending adjacent one another in substantially perpendicular relation to the forwardly moving pan of said harvesting machine, said members defining grain receiving channels therebetween, and a multiplicity of flexible tines extending from sides of said members across said grain receiving channels with at least ones of said tines reaching at least approximately as far as the ends of tines extending from the adjacent member for contacting the grain,

and drive means for moving said tines in a direction toward said forwardly moving pan of said harvesting machine at approximately the same speed as the forward movement of the harvesting machine.

4,301,645
TOBACCO HARVESTING METHOD AND APPARATUS

Donald E. Spratt, Spring & Summer Sts., Weston, Mo. 64098, and Franklin D. Spratt, Lake Jackson, Tex., assignors to Donald E. Spratt, Weston, Mo.

Division of Ser. No. 946,820, Sep. 28, 1978, Pat. No. 4,216,642. This application Feb. 5, 1980, Ser. No. 118,780

Int. Cl.³ A01D *45/16*

U.S. Cl. 56—27.5 3 Claims

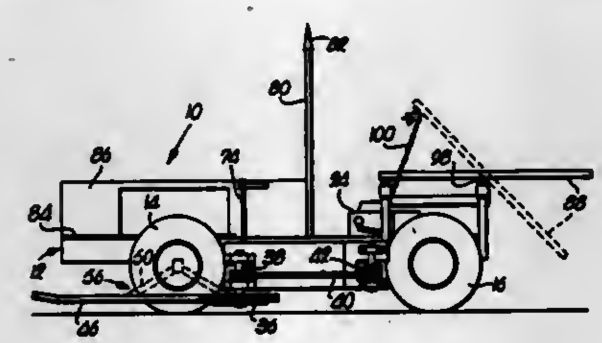

1. Apparatus for use in harvesting a field of tobacco plants arranged in a series of adjacent rows comprising:

a chassis;

ground-engaging wheels supporting the chassis for movement in a path of travel along a row of the plants;

a deck for supporting and temporarily accumulating a stack of separate layers of staked-together plants after their severance from the ground; and

means mounting said deck at the rear of the chassis for swinging movement between a stack supporting position in which the deck is generally horizontal and a stack dumping position in which the deck is inclined downwardly and rearwardly relative to said path of travel in disposition for discharging the stack onto the ground in rearward clearing relationship to said ground wheels,

said mounting means including structure supporting said deck for shifting thereof from a retracted location generally within the lateral confines of the ground wheels while in said horizontal, supporting position for receiving the stack of plants to a laterally offset location projecting partly beyond said lateral confines of the ground wheels in preparation for swinging to said dumping position,

said deck thereby being operable to place stacks onto the ground at sites which avoid overrunning thereof by the chassis when the latter moves in a harvesting pass along a next adjacent row of the plants.

4,301,646
DEFOLIATOR

Donald C. Gates, 610 N. University Dr., Fargo, N. Dak. 58102, and Wayne S. Tonsfeldt, Sabin, Minn. 56580

Filed Aug. 4, 1980, Ser. No. 175,301

Int. Cl.³ A01D *23/02*

U.S. Cl. 56—121.43 8 Claims

1. Apparatus for removing foliage from row crops comprising:

a frame adapted to be connected to a prime mover for movement in a forward direction;

a rotor rotatably attached to said frame disposed transversely to said forward direction;

means for selectively rotating said rotor;

a first brush means attached to said rotor at a first place on said rotor;

a second brush means attached to said rotor at a second place on said rotor, said second brush means comprising a plurality of bristles connected to a flexible line, said flexible line being disposed in a coil around said rotor, said second brush means being spaced from said first brush means; and

adjusting means for selectively adjusting the relative position of the second brush means with respect to the first brush means on said rotor for adjusting for the width of rows of crops, said adjusting means comprising a first clamp means rigidly attached to said rotor, connecting means for connecting one end of said flexible line to said clamp means, a second clamp means rigidly connected to said rotor and a second connecting means for connecting the other end of said flexible line to said clamp means.

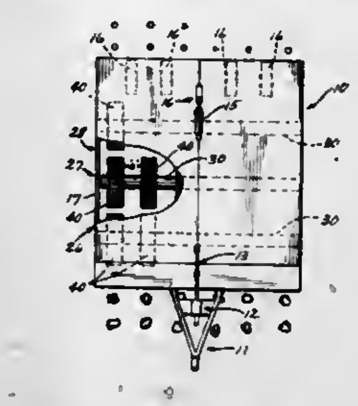

4,301,647
FORAGE CHOPPING CYLINDER

Harold W. Voth, Newton; John T. King, Hesston, and Ronald K. Guinn, Wichita, all of Kans., assignors to Hesston Corporation, Hesston, Kans.

Filed Nov. 5, 1979, Ser. No. 91,258

Int. Cl.³ A01D *49/00*

U.S. Cl. 56—504 13 Claims

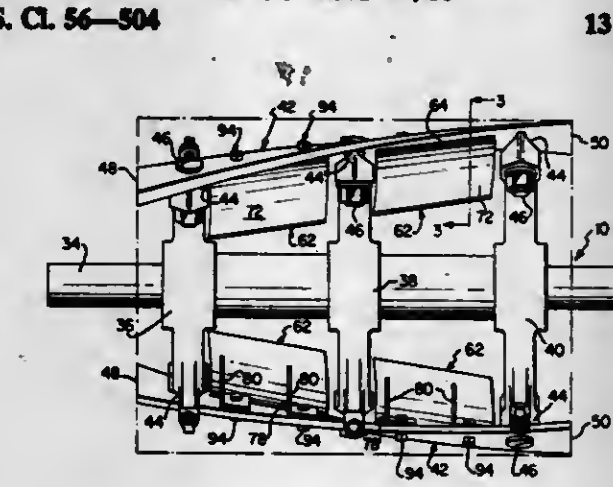

1. In combination with the knife of a crop material chopping cylinder wherein the knife extends generally longitudinally of the axis of rotation of the cylinder and is provided with an inner face, an outer face, and a leading cutting edge at the convergence of said faces, a crop material flow-controlling director comprising:

an elongated, non-severing body having a normally front, crop-engaging surface on one side thereof and extending between the opposite ends of the body, a normally back surface on the opposite side thereof and extending between said opposite ends of the body, a normally outer, longitudinal margin engaging said inner face of the knife, and an inner, longitudinal margin spaced away from said inner face of the knife; and

fastener means on one of said surfaces adjacent said outer, knife-engaging margin thereof attaching the body to the knife.

4,301,648
FRICTION FALSE TWIST APPARATUS HAVING DOOR MOUNTED YARN THREAD-UP

Frank Adenheuer, Wuppertal, and Gerd Munnekehoff, Remscheid, both of Fed. Rep. of Germany, assignors to Barmag Barmer Maschinenfabrik AG, Remscheid, Fed. Rep. of Germany

Filed Jul. 31, 1980, Ser. No. 173,920

Claims priority, application Fed. Rep. of Germany, Aug. 8, 1979, 2932075

Int. Cl.³ D02G *1/08*; D01H *15/00*

U.S. Cl. 57—280 7 Claims

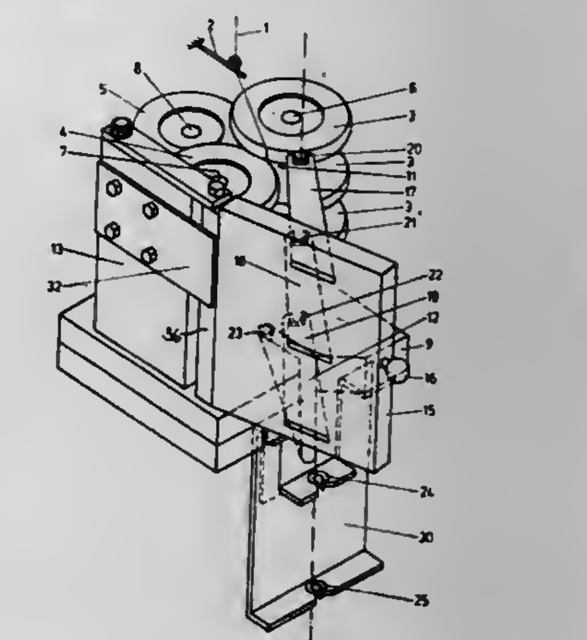

1. An apparatus for friction false twisting a moving yarn, and characterized by the ability to readily permit thread-up while the apparatus is in operation, and while alleviating the risk of injury from the rotating spindles, and comprising

a mounting bedplate,

a yarn twisting assembly comprising at least three spindles mounted to said bedplate for rotation about fixed, parallel axes which are positioned at the corner points of an equilateral polygon having a number of sides corresponding to the number of spindles, and a plurality of circular discs mounted on each spindle for rotation therewith, and with the discs of the spindles overlapping at a point centrally between said spindles and defining an operative path of travel extending axially therebetween,

means for concurrently rotating each spindle in a common direction and such that twist is imparted to a yarn moving along said operative path of travel by contact with the rotating discs,

movable yarn deflecting means for selectively moving a yarn from an inoperative thread-up position disposed laterally of said operative path of travel, toward said operative path of travel, and comprising a door, at least one arm carried by and extending from one side of said door, and means mounting said door to said bedplate for pivotal movement about an axis disposed parallel to the spindle axes and between an open position disposed laterally from said spindles and a closed position immediately adjacent and extending along one side of said twisting assembly, and wherein the free end of said arm is disposed in substantial axial alignment with said inoperative position when said door is open, and such free end moves toward said operative path of travel upon movement of said door to its closed position,

whereby the thread-up of the yarn through the apparatus may be readily accomplished while the spindles are operatively rotating, and the door acts to protectively cover the rotating discs of the twisting assembly.

4,301,649
SINGLE ROTOR ENGINE WITH TURBINE EXHAUSTING TO SUBATMOSPHERIC PRESSURE
Frank H. Walker, Grand Blanc, Mich., assignor to General Motors Corporation, Detroit, Mich.
Filed Aug. 24, 1979, Ser. No. 69,561
Int. Cl.³ F02C *7/10*
U.S. Cl. 60—39.07 **4 Claims**

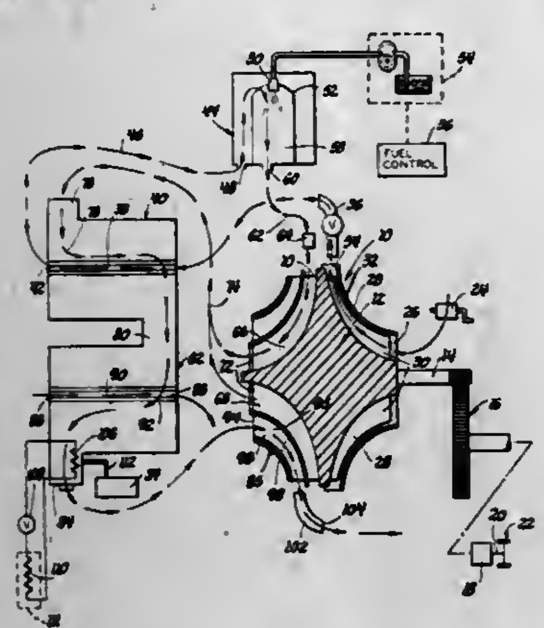

1. An automotive gas turbine engine assembly comprising: a rotor having a first fluid flow path therein operable to compress inlet air, means for combusting the compressed inlet air with fuel for producing a discharge of motive fluid, means forming a turbine for extracting energy from said motive fluid discharge and operable to drive said rotor to induce flow through said first flow path, recuperator means for transferring heat of exhaust from said turbine to discharge flow from said first path prior to its passage into said combustor means, intercooler means, means for connecting said recuperator means to said intercooler means, said intercooler means having a ram air inlet with a cooling air pass therefrom supplied by cooling air in response to forward vehicle movement to cool exhaust from said recuperator means, and a secondary compressor for reducing the pressure of said turbine exhaust gas to a predetermined subatmospheric pressure level to define a subatmospheric source of heating fluid, thereby to improve engine cycle efficiency, and means including said secondary compressor defining a compression flow path operative to draw fluid from said subatmospheric source for discharge to atmosphere to produce an exhaust compression mode thereby to complete engine gas flow back to atmosphere.

4,301,650
PRESSURE REGULATING APPARATUS FOR A CLOSED WATER CIRCUIT
Hans-Rudolf Gubser, Zurich, and Rolf Kehlhofer, Dielsdorf, both of Switzerland, assignors to BBC Brown, Boveri & Co. Ltd., Baden, Switzerland
Filed Jul. 26, 1979, Ser. No. 60,965
Claims priority, application Switzerland, Jul. 28, 1978, 8118/78
Int. Cl.³ F02C *1/00;* **F22D** *1/00*
U.S. Cl. 60—39.18 B **12 Claims**

1. In a closed hot water circuit of the type including a heat exchanger for absorption of a waste gas heat and at least one heat exchanger for a transfer of heat from relatively hot water in the closed hot water circuit to a medium to be heated, and a pressure regulating device for regulation of the water pressure in said circuit, the improvement wherein said pressure regulating device comprises:

a gas expansion tank arranged in said closed hot water circuit, which tank is capable of absorbing pressure and volume fluctuations of the hot water which fall within a specified range;

at least one inlet valve communicating with said hot water circuit for admitting water to said circuit;

at least one drain valve communicating with said hot water circuit for withdrawing water from said circuit; and

pressure regulating means for sensing the water pressure in said hot water circuit and for actuating the at least one inlet valve when the water pressure falls below a preselected value to admit water to said circuit, and for actuating said at least one drain valve when the water pressure exceeds a preselected value to withdraw water from said circuit.

3. A method for regulating the pressure of water in a closed hot water circuit comprising the steps of:

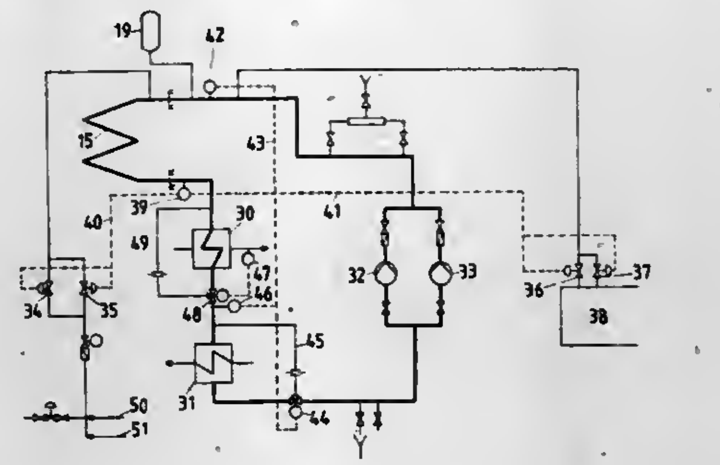

heating the water in said closed hot water circuit at a first location in said hot water circuit;

withdrawing heat from the water in said hot water circuit at a second location in said hot water circuit;

absorbing pressure and volume fluctuations of the hot water which fall within a specified range in an expansion tank;

sensing the pressure of the water in said hot water circuit; and

regulating the pressure of the water in said circuit by admitting water to said circuit when the pressure of the water in the circuit falls below a preselected value by opening an inlet valve, and withdrawing water from said circuit when the pressure of the water in the circuit exceeds a preselected value by opening a drain valve.

4,301,651
EXHAUST GAS REACTOR
Franco Cocchiara; Mario Camarsa, both of Rome, and Gian P. Garcea, Milan, all of Italy, assignors to Exxon Research & Engineering Co., Florham Park, N.J. and Alfa Romeo SpA, Milan, Italy
Continuation of Ser. No. 459,588, Apr. 10, 1974, abandoned. This application Jun. 25, 1976, Ser. No. 699,618
Claims priority, application Italy, Apr. 11, 1973, 49370 A/73
Int. Cl.³ F01N *3/26*
U.S. Cl. 60—282 **1 Claim**

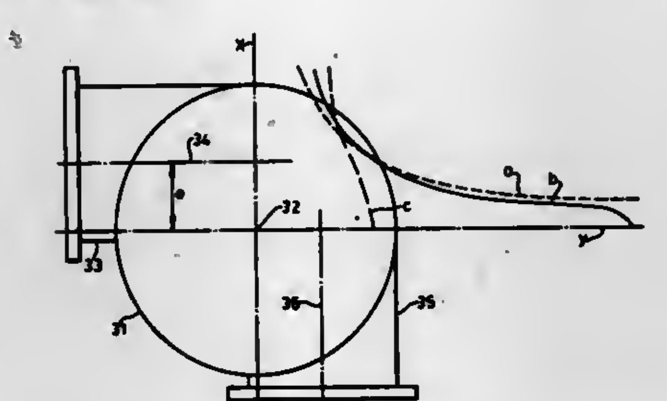

1. A reactor for treating exhaust gas from an internal combustion engine, comprising a lateral wall defining a single substantially axially unobstructed hollow cylindrical combustion chamber of circular cross-section and substantially circular end walls defining the opposite ends of the chamber, said chamber having an inlet zone adjacent one endwall and an outlet zone adjacent the other end wall, at least one inlet aperture in the lateral wall adjacent to said one end wall and inlet pipe means joined to the lateral wall for directing exhaust gas through the inlet aperture into the chamber substantially tangentially with respect to the lateral wall and causing exhaust gas to circulate in a vortex substantially parallel to the lateral wall, an outlet aperture in the lateral wall adjacent to said other end wall, and an outlet pipe joined to the lateral wall and arranged for receiving gases substantially tangentially from the chamber via the outlet aperture, the ratio of the width of the inlet aperture and pipe means, in a cross-sectional plane which is perpendicular to the axis of said reactor to the diameter of said reactor, in the inlet zone being in the range of substantially 1:2 and the ratio of the width of the outlet aperture and outlet pipe, in a cross-sectional plane perpendicular to the axis of said reactor, to the diameter of said reactor in the outlet zone being in the range of substantially 1:2, and the ratio of axial length to internal diameter of said chamber being in the range of from 1:1 to 4:1.

4,301,652
EXHAUST GAS PURIFICATION APPARATUS FOR MOTOR VEHICLES
Kathuharu Sohda; Shojiro Sohda, and Keiko Sohda, all of 2-6-10, Hagoromo-cho, Tachikawa-sho, Tokyo, Japan
Continuation of Ser. No. 819,978, Jul. 28, 1977, abandoned. This application Aug. 22, 1979, Ser. No. 68,667
Int. Cl.³ B01D *53/14*
U.S. Cl. 60—310 **5 Claims**

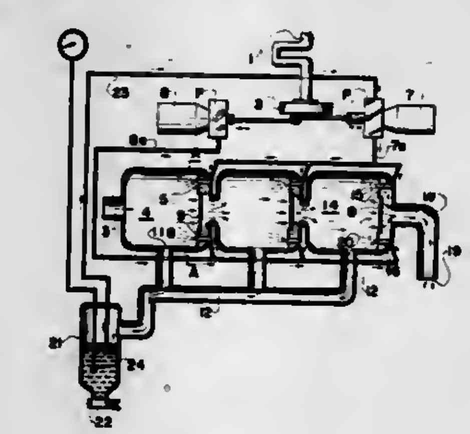

1. A device for treating exhaust gases from an internal combustion engine having a rotatable crankshaft, comprising a housing having a gas inlet adapted to be connected to the exhaust of the internal combustion engine and a plurality of serially arranged interconnected reaction chambers, the first of said chambers being connected to said gas inlet and having a gas outlet forming a gas inlet into a second chamber, and the last of said chambers having a gas outlet to atmosphere, each of said gas inlets and each of said gas outlets cooperating with said associated reaction chamber to provide a path of gas flow therethrough from said gas inlet to said gas outlet, a flat perforated gas deflection plate mounted transversely of said path of gas flow in alignment with the overall cross-section, each of said gas outlets and spaced upstream thereof in the respective reaction chamber associated with each of said outlets so as to deflect exhaust gases from midflow therearound and through the perforations thereof, means for spraying a purifying fluid containing an aqueous solution of sodium percarbonate and sodium bicarbonate into each reaction chamber upstream said perforated plate in an upstream direction into the exhaust gases in a counterflow relationship with said gases, and drain means associated with the bottom of each reaction chamber for draining the remains of the aqueous solution from said chambers, wherein said means for spraying a purifying fluid containing an aqueous solution includes a tank having the aqueous solution therein, pump means associated with said tank for pumping the aqueous solution, and nozzles connected to said pump means, said nozzles being arranged around said plate at circumferentially spaced intervals concentrically around the plates to inject the purifying fluid into each reaction chamber.

4,301,653
TANDEM MASTER CYLINDER
Jean-Jacques Carre, Montreuil, and Jean-Marc Cheron, Longperrier, both of France, assignors to Societe Anonyme D.B.A., Paris, France
Filed Oct. 24, 1979, Ser. No. 87,851
Int. Cl.³ F15B *7/00*
U.S. Cl. 60—535 **2 Claims**

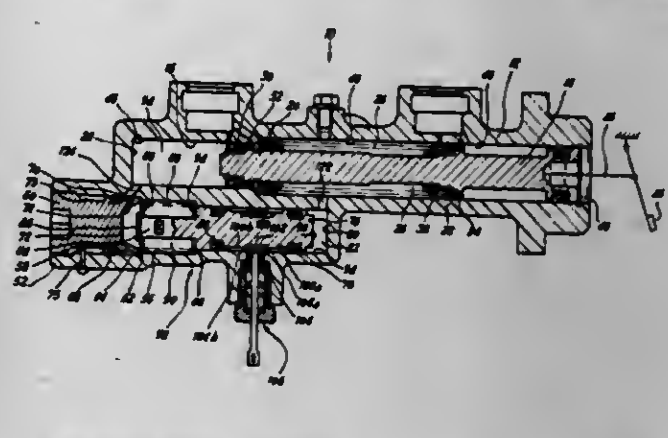

1. A tandem master cylinder wherein two pistons rigidly associated with one another and with a control rod compress the brake fluid into two corresponding cavities connected (a) to the cylinders of the front wheel and back wheel respectively of a motor vehicle and (b) to an equalizer device having a casing with a plunger movably disposed therein, said casing and plunger coöperating to define a pair of chambers, hydraulic ducts connecting the cavities of the master cylinder to the chambers defined in the casing of the equalizer device on either side of the plunger, which if required is associated with a pressure unbalance indicator, characterized in that at least one of the hydraulic ducts is formed with a constriction slowing down the flow of brake fluid, said constriction being formed in a plug axially movable relative to the casing of the equalizer device, the plug being positionable so that the constriction is opposite the connecting duct to the corresponding cavity in the master cylinder, the axial movement of the plug away from the plunger being sufficient to uncover the duct when the master cylinder is drained.

4,301,654
PRESSURIZED FLUID MOTOR
David W. Hayden, 1225 Martha Custis Dr., Alexandria, Va. 22302
Filed Nov. 6, 1979, Ser. No. 91,785
Int. Cl.³ F01K *25/06*
U.S. Cl. 60—649 **7 Claims**

1. A method of generating pressure in the expansible chamber of a power plant, comprising:

(a) adding sulfuric acid to a solution of bicarbonate of soda in a first container and generating a solution under pressure;

(b) conducting said solution under pressure through first valving means to a first side of a double acting piston;

(c) evacuating spent solution by a second side of said double acting piston through second valving means and conducting said spent solution to a second container;

(d) reversing said first and second valving means and coöducting said solution under pressure through third valving means to said second side of said double acting piston;

(e) evacuating additional spent solution by said first side of said double acting piston through fourth valving means

and conducting said additional spent solution to said second container; and

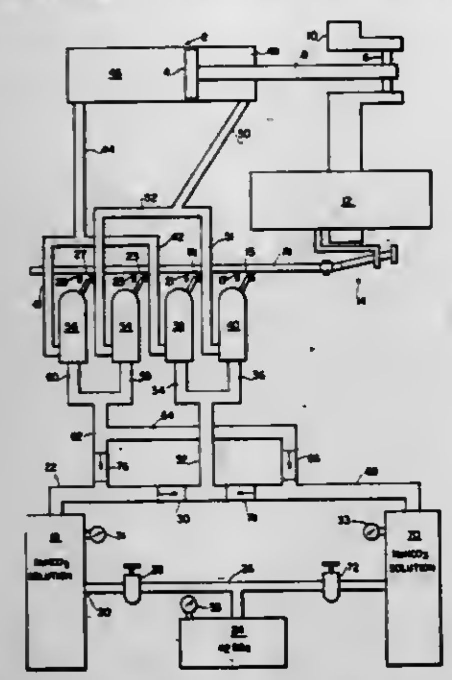

(f) adding additional sulfuric acid to said spent solution in said container and directing solution under pressure generated therein to said double acting piston through a check valve means.

4,301,655
COMBINATION INTERNAL COMBUSTION AND STEAM ENGINE

Luther B. Thomas, 159 Herndon Ave., Shreveport, La. 71101

Filed Dec. 14, 1979, Ser. No. 103,738
Int. Cl.³ F02B *29/06*
U.S. Cl. 60—712 7 Claims

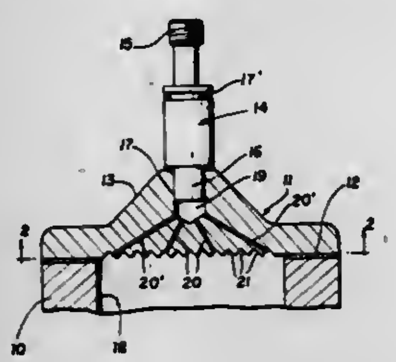

1. In a combination internal combustion and steam engine of the fuel injected type, a cylinder head, a water injection means connected with the cylinder head to deliver small amounts of water thereto cyclically during engine operation while the engine is at optimum operating temperature, the cylinder head being provided with multiple spaced small water distribution ports opening through the bottom face of the cylinder head adjacent to the cylinder combustion space for delivering superheated steam directly into the combustion space to augment engine power, and the bottom face of the cylinder head having effective area increasing recess means enabling the cylinder head to receive and store the heat necessary for quickly generating superheated steam from the injected water in said ports.

4,301,656
LEAN PRECHAMBER OUTFLOW COMBUSTOR WITH CONTINUOUS PILOT FLOW

Richard J. Stettler, Birmingham, Mich., assignor to General Motors Corporation, Detroit, Mich.

Filed Sep. 28, 1979, Ser. No. 79,872
Int. Cl.³ F23R *3/14, 3/30, 3/34*
U.S. Cl. 60—737 4 Claims

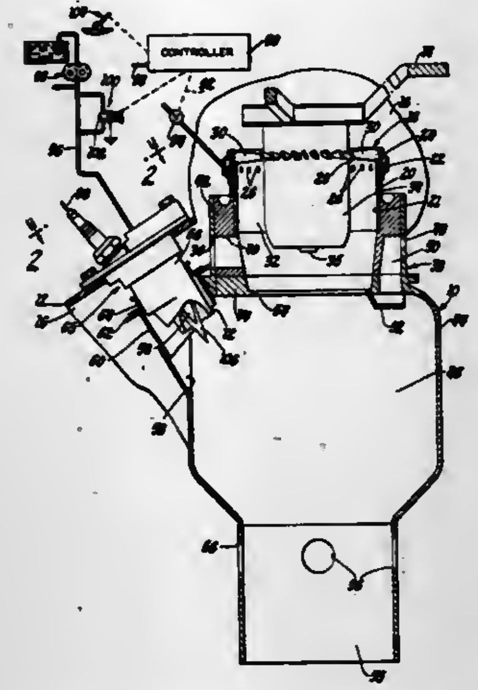

1. In an automotive gas turbine engine having a fuel supply for a combustor of the type including a primary inlet prechamber for prevaporization of fuel and mixing of fuel with air and an outer combustor wall in communication with the outlet end of the prechamber to define a primary reaction chamber and including an annular flash preventor therebetween, the improvement comprising: fuel injection means for directing a swirling fuel/air mixture through the prevaporization prechamber and into the primary reaction chamber, a continuously operated pilot flame tube assembly supported on the combustor wall including a shield tube extending into the primary reaction zone approximately 45° to an initial air/fuel swirl therein and operative to maintain a continuous ignition flame within the primary combustion zone during engine operation, said continuously operated pilot flame tube assembly being located downstream of the fuel injection means to prevent premature flame-out of the main reaction chamber combustion in the swirling fuel/air mixture during engine operation, and producing a heat source independent of heat produced in combustion of the fuel/air mixture to lower the combustion temperature required in the reaction zone swirl pattern thereby to reduce formation of oxides of nitrogen.

4,301,657
GAS TURBINE COMBUSTION CHAMBER

Robert N. Penny, Coventry, England, assignor to Caterpillar Tractor Co., Peoria, Ill.

Filed May 3, 1979, Ser. No. 35,595
Claims priority, application United Kingdom, May 4, 1978, 17620/78
Int. Cl.³ F02C *7/22*
U.S. Cl. 60—748 3 Claims

1. A gas turbine combustion chamber of generally cylindrical shape having a peripheral wall having primary air inlets therein, a closed head, at least one fuel inlet therein and means for introducing swirl air into the combustion chamber adjacent said fuel inlet, the combustion chamber having an open downstream end and said primary inlets defined by a first set of open-ended tubes, each having an imperforate axially continuous wall extending inwardly through said peripheral wall and projecting a substantial distance from the inner periphery of said peripheral wall into the combustion chamber and having

its inner, that is its outlet, end facing in an upstream direction within the combustion chamber, to introduce a discrete stream of air with at least a component of motion in the upstream direction to effect recirculation of fuel, air and combustion gases within the combustion chamber and its outer, that is its inlet, end extending outwardly of the combustion chamber, and outwardly flared, second and third sets of open-ended tubes similar to said first set and similarly arranged in positions downstream of the primary air inlets to effect respectively introduction of secondary and tertiary air streams, said second-

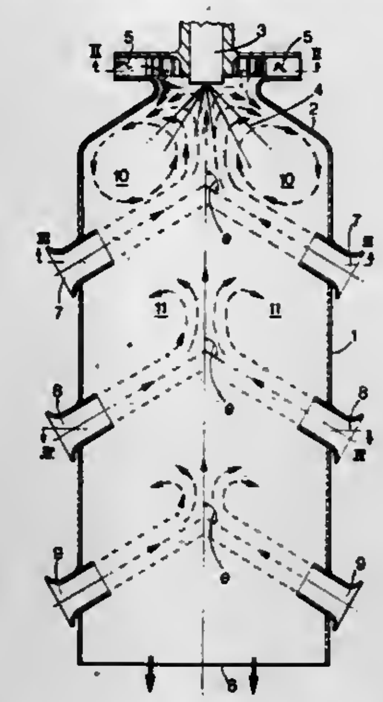

ary and tertiary air tubes so directed that their respective air streams are offset from a diametral plane through the combustion chamber to create rotation in the same direction as swirl air admitted at the upstream end of the combustion chamber, said air tubes for introducing streams of primary, secondary and tertiary air into the combustion chamber having their longitudinal axes inclined to the longitudinal centre-line of the combustion chamber by obtuse angles defined between the longitudinal axis of each air tube and the longitudinal centre-line of the combustion chamber in the upstream direction.

4,301,658
CONTROL CIRCUITRY FOR THERMOELECTRIC COOLER

Michael A. Reed, Tucson, Ariz., assignor to Koolatron Industries, Ltd., Barrie, Canada

Filed Dec. 11, 1979, Ser. No. 102,447
Int. Cl.³ F25B *21/02;* G08B *21/00*
U.S. Cl. 62—3 11 Claims

1. In a thermoelectric refrigeration unit including
i. a storage compartment,
ii. a fan compartment for housing a fan and an external heat exchanger,
iii. an internal heat exchanger located in the storage compartment, and
iv. thermoelectric means for causing heat to flow from one to the other of the internal and external heat exchangers, said thermoelectric means having a first and second terminal,

control circuitry comprising in combination:
a. first thermister circuit means for producing a first voltage representative of the actual temperature in the storage compartment;
b. first circuit means for producing a second voltage representative of a desired temperature in the storage compartment;
c. second circuit means coupled to said first thermister circuit means and said first circuit means for producing a third voltage if said second voltage exceeds said first voltage and producing a fourth voltage if said second voltage does not exceed said first voltage, said third and fourth voltages being at an output of said secood circuit means;
d. first switching means coupled to the output of said second circuit means and the first terminal of said thermoelectric means for
   i. electrically coupling the thermoelectric means to a voltage supply conductor to cause a current to flow into the first terminal of the thermoelectric means in response to said third voltage; and
   ii. electrically decoupling the first terminal of the thermoelectric means from said voltage supply conductor in response to said fourth voltage;
e. third circuit means for causing said first switching means to prevent said first terminal of said thermoelectric means from being electrically coupled to said supply voltage conductor if a temperature in said fan compartment exceeds a predetermined level, said third circuit means being disposed in said fan compartment, wherein said thermoelectric refrigeration unit includes a pair of terminals for electrical connection to a DC voltage source, said first, second and third circuit means being coupled between said pair of terminals to effect energization of said first, second, and third circuit means;
f. fourth circuit means for producing a first signal level if the voltage of said DC voltage source exceeds a predetermined level and for producing a signal which switches

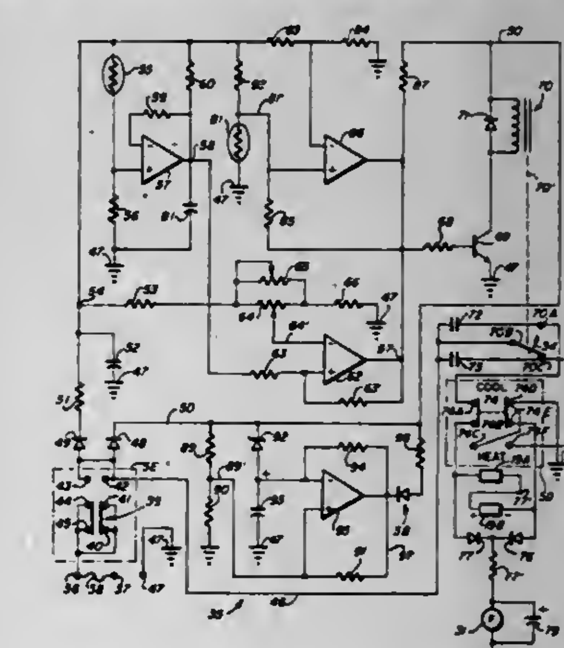

between said first signal level and a second signal level at a predetermined rate if the voltage of said DC voltage source is less than said predetermined level, said fourth circuit means including
   i. resistive divider means coupled between said pair of terminals for producing a fifth voltage representative of said voltage of said DC voltage source,
   ii. zener diode means coupled to one of said pair of terminals for establishing a reference voltage,
   iii. comparator means coupled to said resistive divider means and said zener diode means for comparing said fifth voltage with said reference voltage, said comparator means producing a first signal level when said fifth voltage is less than said reference voltage, said comparator means having an output and an input,
   iv. feedback circuit means coupled between said output and said input for producing a feedback signal to said input, and
   v. capacitive circuit means coupled to said feedback circuit means and responsive to said feedback signal for producing a periodic signal which varies at said predetermined rate on said input in response to said first signal level, said periodic signal causing said comparator means to switch the voltage level on said output between said first and second levels, said comparator

means maintaining the voltage level of said output at said first level when said fifth signal level exceeds said reference voltage; and

g. indicating means coupled to said output for producing a perceivable constant indication if the voltage of said DC source exceeds said predetermined level and a perceivable indication which varies at said predetermined rate if the voltage of said DC source is less than said predetermined level.

4,301,659
FLUIDIZED FREEZING

Walter H. Martin; George C. Briley, and Peter Y. M. Pao, all of San Antonio, Tex., assignors to Refrigeration Engineering Corporation, San Antonio, Tex.
Division of Ser. No. 100,527, Dec. 5, 1979, Pat. No. 4,281,521. This application Sep. 10, 1980, Ser. No. 185,997
Int. Cl.³ F25D *17/00*
U.S. Cl. 62—57 2 Claims

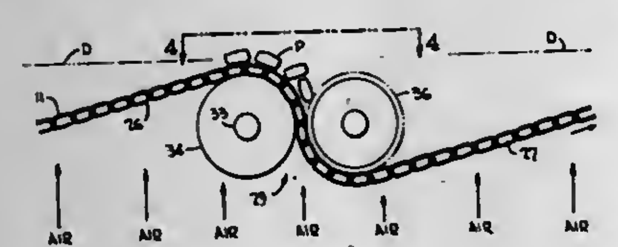

1. In an I.Q.F. process of freezing articles of food carried out by conditioning the articles at a first stage by blowing refrigerated air upwardly therethrough for fluidizing a bed of the articles before subjecting the articles to deep-bed gas fluidization at a second state, the improvement including the step of effecting at least one downward stepping movement of the articles at said first stage for thinning the bed of articles whereby to rapidly increase the air velocity through the articles so as to cool and separate the articles preventing them from sticking and freezing to one another before being subjected to the deep-bed gas fluidization.

4,301,660
HEAT PUMP SYSTEM COMPRESSOR FAULT DETECTOR

Dale A. Mueller, St. Paul, and Stephen L. Serber, New Hope, both of Minn., assignors to Honeywell Inc., Minneapolis, Minn.
Filed Feb. 11, 1980, Ser. No. 120,454
Int. Cl.³ F25B *49/00, 13/00*
U.S. Cl. 62—126 5 Claims

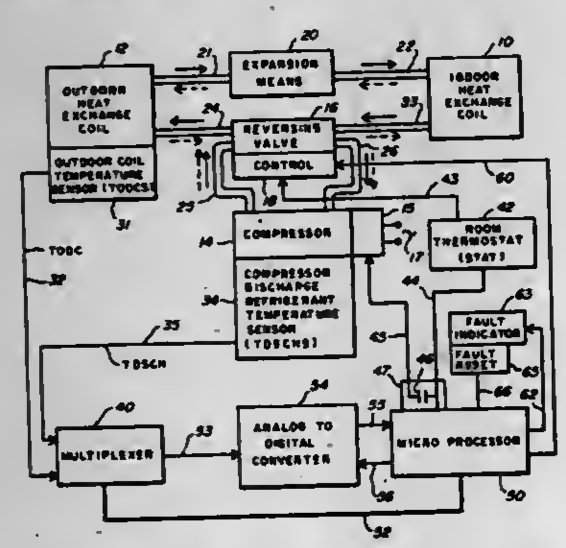

1. A compressor fault detection and control system (hereinafter "fault detection system") for a reverse cycle refrigeration system (hereinafter "system") for heating and cooling an enclosed space wherein said system comprises refrigerant compression means, refrigerant compression control means, an indoor coil, an outdoor coil, and refrigerant conduit means connecting said compression means and said coils, said fault detection system comprising:

outdoor coil temperature sensing means (hereinafter "TODCS") having an output indicative of outdoor coil temperature (hereinafter TODC");

compressor discharge temperature sensing means (hereinafter "TDSCHS") having an output indicative of the temperature (hereinafter "TDSCH") of the refrigerant discharged from said refrigerant compression means; and

temperature sensing means (hereinafter "STAT") having an output indicative of a demand for heating or cooling of the enclosed space; and

controller means having operative connections to said TODCS, TDSCHS, and STAT so as to receive the outputs thereof, said controller means including circuit connect-disconnect means selectively interconnecting said STAT output to said refrigerant compression control means whereby when said STAT output is connected thereto said compression means is enabled to operate and when said STAT output is disconnected therefrom said compression means is inhibited from operating, said controller means also including timing means and means for comparing the value of TDSCH and the value of TODC plus a preselected constant K_1, and said controller further being characterized by being adapted to inhibit said compression means from operating if, after a preselected time interval as measured by said timing means, the value of TDSCH is less than the value of TODC plus said predetermined constant.

4,301,661
THERMAL SIGNAL DEVICE WITH TIMER

Walter I. Krewson, Jr., 30708 Lake Rd., Bay Village, Ohio 44140
Continuation-in-part of Ser. No. 780,468, Mar. 23, 1977, abandoned. This application Apr. 24, 1978, Ser. No. 899,657
Int. Cl.³ G01K *13/00;* F25D *21/02*
U.S. Cl. 62—130 10 Claims

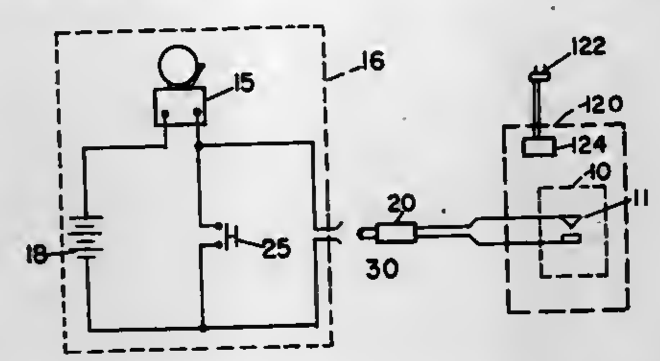

1. An indicating apparatus for the temperature in a compartment of a refrigerator comprising:

a direct current source of electric energy such as a battery; said battery electrically isolated from any other source of electrical energy; hermetically sealed thermal responsive means adapted to be positioned within said compartment and in circuit with said source of electrical energy, electrical indicating means positioned outside said refrigerator and in circuit with said source of electrical energy, a detachable electrical connection in said circuit between said thermal responsive means and said indicating means, said thermal-responsive means being pre-set for an "off" position below a predetermined degree of temperature within said compartment, but adapted to be moved automatically to an "on" position, whenever the temperature in said compartment rises above said pre-set degree of temperature, switch means operable by said thermal responsive means to close the circuit through the indicating means in response to an increase of temperature in said compartment above said pre-set temperature, so as to give an indication that the temperature within such compartment exceeds said pre-set temperature of said thermal-responsive means, and timing means electrically connected to the circuit to detect the presence of electrical current through the electrical indicating means to determine how long the temperature within the compartment exceeds the pre-set temperature of the thermal-responsive means, said circuit between said source of electrical energy and the switch means being normally open so long as the temperature in said compartment is below said pre-set temperature of said thermal-responsive means.

4,301,662
VAPOR-JET HEAT PUMP

Gordon R. Whitnah, Minneapolis, Minn., assignor to Environ Electronic Laboratories, Inc., Minneapolis, Minn.
Filed Jan. 7, 1980, Ser. No. 110,181
Int. Cl.³ F25B *27/02, 1/06*
U.S. Cl. 62—238.4 5 Claims

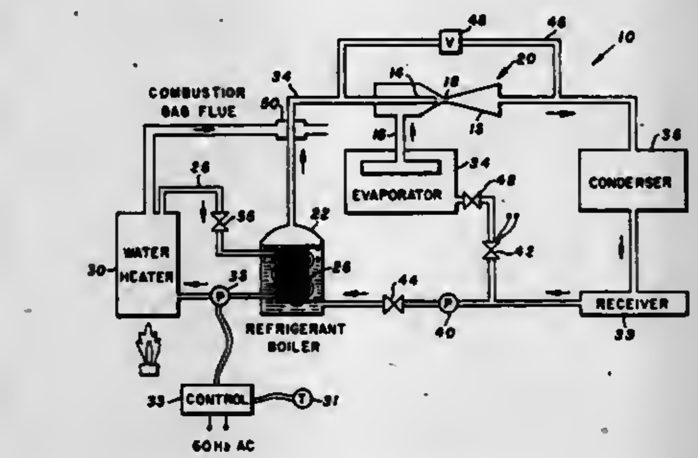

1. A heat pump system comprising in combination:

(a) a first heat exchanger disposed in an enclosed zone to be heated;

(b) a second heat exchanger disposed in a heat transfer relationship to the ambient outside of said enclosed zone;

(c) fuel fired boiler means for producing vaporized refrigerant at a relatively high pressure;

(d) a refrigerant superheater for receiving hot combustion gases from the burning of said fuel and coupled in a heat exchange relationship with said vaporized refrigerant to thereby superheat the vaporized refrigerant leaving said boiler;

(e) an ejector pump having a primary jet nozzle coupled to said refrigerant superheater, a secondary inlet adapted to be coupled to said second heat exchanger and an outlet, the flow of high pressure refrigerant vapor through said primary jet creating a negative pressure proximate said secondary inlet;

(f) means coupling said outlet of said ejector pump to said first heat exchanger for condensing the high pressure vaporized refrigerant to a liquid phase;

(g) reservoir means for collecting the liquefied refrigerant produced by said first heat exchanger; and

(h) means coupling said reservoir means to said first heat exchanger means and to said boiler means for maintaining a predetermined level of liquid refrigerant in each.

4,301,663
REFRIGERATING CABINET

Akitika Hoshino, Kawasaki, Japan, assignor to The General Corporation, Japan
Filed Dec. 27, 1979, Ser. No. 107,540
Claims priority, application Japan, Dec. 28, 1978, 53-179207[U]
Int. Cl.³ F25D *19/00*
U.S. Cl. 62—453 6 Claims

1. A refrigerating cabinet comprising: a metallic external casing including a front wall, a rear wall, a left- and a right-hand sidewall, a top wall and a bottom wall with an opening formed in the front wall; an internal casing fitted into the external casing and having a plurality of walls which are disposed in opposing relationship with the rear wall, the left- and the right-hand sidewall, the top wall and the bottom wall of the external casing with suitable clearances therebetween; heat-insulating material disposed in the clearance space between the external and the internal casings; a compressor disposed on the outside of the external casing; an evaporator disposed within

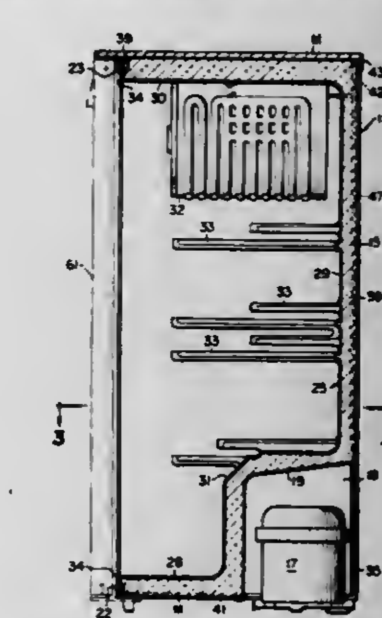

the internal casing; and a condenser unit including a condenser tube for cooling down and reducing the pressure of a refrigerant from the compressor before it is fed to the evaporator, the condenser tube extending along the inside of at least three of the four corners defined by the front wall and the adjoining sidewalls, the top wall and the bottom wall of the external casing and also extending along the inside of at least three of the four corners defined by the rear wall and the adjoining sidewalls, the top wall and the bottom wall of the external casing.

4,301,664
KEY BRACELET

Frederick Wilcox, 313 Pontiac Trail, Walled Lake, Mich. 48088
Filed Feb. 26, 1980, Ser. No. 124,730
Int. Cl.³ A44C *5/00;* E05B *19/14;* B29D *3/00*
U.S. Cl. 63—1 R 3 Claims

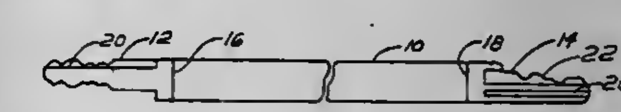

1. A bracelet comprising a soft malleable flat band and a key blank extending longitudinally from each end of the flat band as extended portions of the bracelet that overlap when the bracelet is wrapped about the wrist, each said key blank rigidly and permanently affixed to the flat band.

4,301,665
SEALING ARRANGEMENT

Karl P. Lopata, Krefeld, Fed. Rep. of Germany, assignor to Kleinewefers GmbH, Krefeld, Fed. Rep. of Germany
Continuation of Ser. No. 19,883, Mar. 12, 1979, abandoned. This application Nov. 24, 1980, Ser. No. 209,655
Claims priority, application Fed. Rep. of Germany, Mar. 11, 1978, 2810660; Apr. 26, 1978, 2818178
Int. Cl.³ D06B *23/18*
U.S. Cl. 68—5 E 18 Claims

1. An apparatus for continuous treatment of a textile web at an atmospheric pressure different from ambient pressure, the apparatus comprising, in combination:

a vessel having an inner surface for defining a wall of an enclosure having the different pressure;
a rotatable roller having a surface forming another wall of the enclosure;
means for rotating the roller about a longitudinal axis;
means for holding the web in contact with the roller to advance the web through the enclosure as the roller rotates; and,
a sealing arrangement, comprising:
at least one retaining member extending longitudinally along the roller in spaced relation thereto to form a passage for the enclosure through which passage the web passes;
at least one longitudinal seal element mounted on the retaining member and extending longitudinally along the roller,

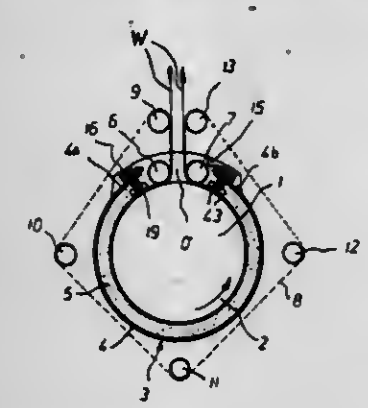

said seal element engaging the web as the web is advanced by the roller through the enclosure and said seal element sealing the passage of the enclosure;
a pair of side walls spaced from the ends of the roller and ends of the retaining member and forming end walls of the enclosure;
spacers extending inwardly from the end walls for holding the end walls spaced from the end of the roller, and
sealing gaskets positioned between and abutted by the spacers and retaining members and extending radially of the roller, said sealing gaskets engaging the surface of the roller outboard of the ends of the seal element while being held in engagement with the ends of the seal elements by the spacers.

4,301,666
LUBRICATION SYSTEM FOR TRANSMISSION OF AUTOMATIC CLOTHES WASHING MACHINE
Theodore J. Blevins, Prospect, Ky., assignor to General Electric Company, Louisville, Ky.
Filed May 30, 1980, Ser. No. 154,634
Int. Cl.³ D06F *39/00*
U.S. Cl. 68—23.7 16 Claims

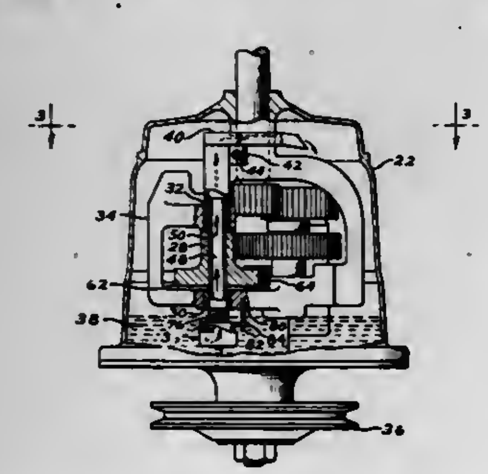

1. In an automatic washing machine including a basket, an agitator within the basket and a transmission for driving the agitator and the basket, a lubrication system therefor comprising:

(a) a hollow shaft driven from the transmission;
(b) a cup mounted on the lower end of said shaft for rotation therewith, said cup defining a chamber;
(c) a piston slidably positioned on said shaft and receivable within said chamber;
(d) means preventing rotation of said piston but permitting reciprocating motion thereof on said shaft relative to said chamber;
(e) means biasing said piston toward said chamber;
(f) said piston being formed to provide an inlet port and an outlet port;
(g) said hollow shaft having a passage from the exterior thereof to the hollow interior thereof, said outlet port being positioned in communication with said shaft passage at predetermined intervals during rotation of said shaft;
(h) said cup and said piston having engaging cam faces formed to cause said piston to move along said shaft in a direction away from said chamber during a portion of the cycle of rotation of said shaft to open said inlet port, said cam faces being further shaped to provide abrupt return movement of said piston into said chamber under the influence of said biasing means at said predetermined intervals to close said inlet port and force lubricant through outlet port and said passage into the hollow interior of said shaft; and
(i) means for distributing lubricant from the upper end of said shaft to the transmission.

4,301,667
TUBULAR LATCH BOLT RETRACTING MECHANISM
Walter E. Best, and William R. Foshee, both of Indianapolis, Ind., assignors to Best Lock Corporation, Indianapolis, Ind.
Filed May 5, 1980, Ser. No. 146,791
Int. Cl.³ E05B *17/04*
U.S. Cl. 70—380 8 Claims

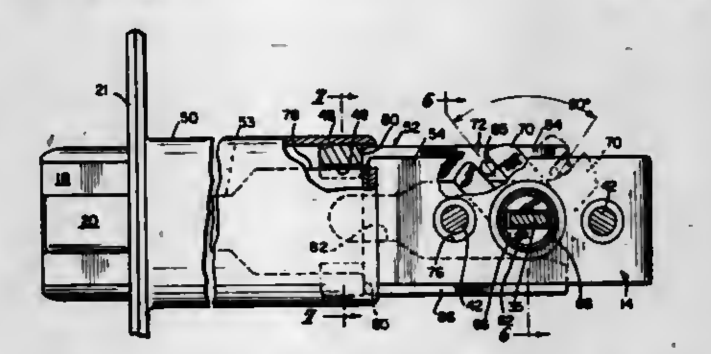

1. Operating mechanism for a latch bolt mounted in a latch tube, biased to projected position and connected for retraction by a tailpiece, comprising
an extension having spaced parallel side walls extending rearward from the latch tube,
a rotary retractor having a hub rotatably mounted between said side walls and having at least one radially slotted arm and an adjacent cylindrical section,
the tailpiece having a rear portion formed by spaced parallel side legs which straddle the cylindrical section of the retractor so as to guide the tailpiece for linear movement, and
a cross pin mounted in one leg of the tailpiece and engaged in the slot of the retractor arm so as to cause rotary motion of the retractor to produce linear retraction of the tailpiece and retraction of the latch bolt.

4,301,668
VEHICLE LOCK ARRANGEMENT
Heinz Renz, Aurich, Fed. Rep. of Germany, assignor to Dr. Ing. h.c.F. Porsche AG, Stuttgart-Zuffenhausen, Fed. Rep. of Germany
Filed Oct. 27, 1977, Ser. No. 846,254
Claims priority, application Fed. Rep. of Germany, Oct. 27, 1976, 2648677
Int. Cl.³ E05B *63/00*
U.S. Cl. 70—422 9 Claims

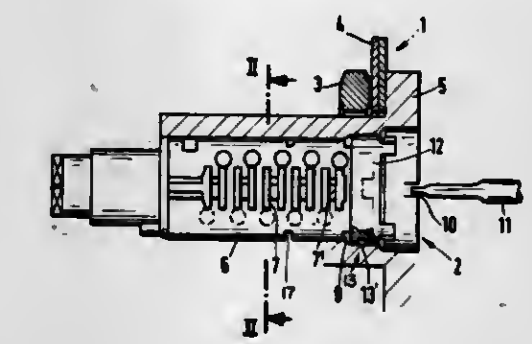

1. A cylinder lock arrangement which includes a lock housing, a closing cylinder arranged in the lock housing, key-operated tumblers provided between the closing cylinder and the lock housing, and a groove means provided in the housing for accommodating the tumblers, characterized in that at least one breaking point is provided at the closing cylinder, the tumblers and groove means are constructed so that, with a corresponding loading of the closing cylinder, the lock arrangement is always separated at the at least one breaking point, and in that means are provided for preventing axial displacement of a separated portiou of the closing cylinder between the breaking point and an opening for receiving a key.

4,301,669
TWO ANTI-THEFT LOCKS
Herbert R. Floyd, 420 E. 105th St., New York, N.Y. 10029
Filed Jul. 31, 1979, Ser. No. 61,704
Int. Cl.³ E05B *17/14*
U.S. Cl. 70—428 3 Claims

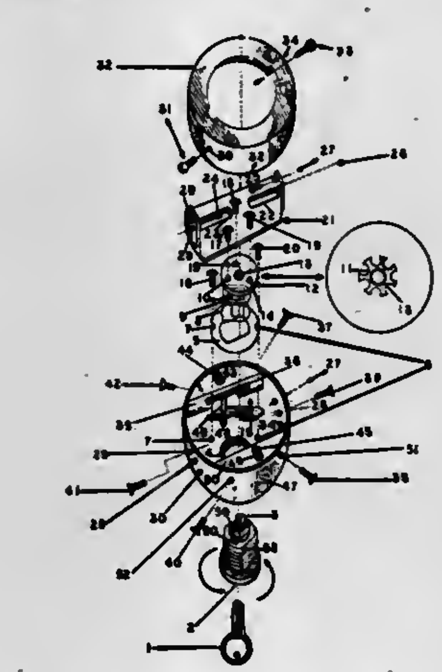

1. Two anti-theft locks for providing authorized access to a pair of diversified auto ignition switches mounted on the steering column of a vehicle: said first ignition switch extends from said steering column being substantially cylindrical in shape, however, the said second ignition switch doesn't extend from said steering column, and said both ignition switches having a first axis, and said ignition switches having a still segment fixed to said steering column and a movable segment rotatable with respect to said stationary segment about a second axis substantially perpendicular to said first axis and spaced from said stationary segment to define an annular hiatus therebetween; said two anti-theft locks comprising
(a) housing having one end surface shaped to join with end adapt to the mold of the circumference of said steering column coaxially with said second axis,
(b) means for engaging the movable segment of said ignition switch comprising at least one movable bar shaped element having at least one quadrilateral shaped member thereon and adapted to move reciprocally between a locked position in joining engagement with said annular hiatus and an unlocked position out of joining engagement with annular hiatus, and
(c) means for controlling the reciprocation of said at least one movable bar shaped element between said locked position and said unlocked position comprising
(i) at least one arm corresponding to and coupled to said at least one movable bar shaped element, said at least one arm having one end surface providing an aperture thereon,
(ii) shaped to mate with and connect to a rotatable disk-shaped member for movement of said at least one arm,
(iii) means for guiding said at least one movable bar shaped element from at least one semi-quadrilateral shaped hollowed out member, and
(iv) means for selectively guiding said at least one movable bar shaped element transposable to said at least one semi-quadrilateral shaped hollowed member therein.

4,301,670
ROLLING MILL TRAIN
Georg Engel, Kaarst, and Alfons Spaude, Dusseldorf, both of Fed. Rep. of Germany, assignors to Schloemann-Siemag Aktiengesellschaft, Dusseldorf, Fed. Rep. of Germany
Filed Oct. 10, 1979, Ser. No. 83,265
Claims priority, application Fed. Rep. of Germany, Oct. 12, 1978, 2844438
Int. Cl.³ B21B *1/08*
U.S. Cl. 72—226 3 Claims

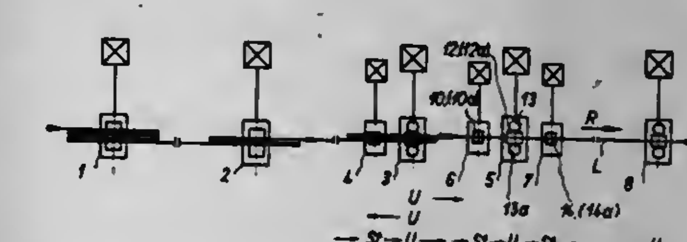

1. A rolling mill train comprising two two-high reversing rolling stands; an associated edging stand; a reversing universal rolling stand and a further reversable universal rolling stand having a preceding and a following edging stand; and a universal finishing rolling stand, wherein said further reversable universal rolling stand, said preceding and following edging stands and said universal finishing rolling stand are aligned and drivable to roll a rail in a single continuous pass therethrough, and one of said preceding and said following edging stands is movable transversely out of the train for rolling a beam without using said preceding edging stand.

4,301,671
SUPPORTED KNOCKOUT PIN ASSEMBLY FOR FORGING MACHINES OR THE LIKE
George T. Payne, and Gerald R. Eakin, both of Tiffin, Ohio, assignors to The National Machinery Company, Tiffin, Ohio
Filed Feb. 4, 1980, Ser. No. 118,097
Int. Cl.³ B21D *45/00*
U.S. Cl. 72—344 18 Claims

1. A forging machine comprising a frame, a die on said frame having a die opening therein, a passage in said frame aligned with said opening, a knockout pin movable with clearance along said passage between a retracted position and an ex-

tended position, movement of said knockout pin to said extended position causing it to move in along said opening, and support means in said passage operable to support said pin intermediate its ends, said support means including a plurality of support members through which said pin extends and which are slidable thereon, said support members each being movable along said passage to an associated predetermined support position, said support members when in their predetermined

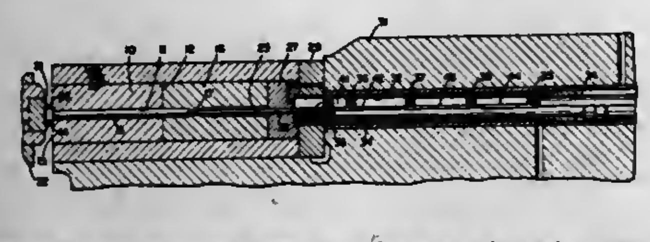

support positions being spaced along said pin and cooperating to support said pin at spaced locations therealong, movement of said pin to said extended position causing said support members to move from their associated predetermined support positions along said passage toward said opening, and return means operable to return said support members to their associated predetermined support positions when said knockout pin moves to said retracted position.

4,301,672
PROCESS FOR FORMING SEMI-FLOAT AXLE TUBES AND THE LIKE
Joseph A. Simon, 237 Lothrop, Grosse Pointe Farms, Mich. 48236
Filed Oct. 24, 1979, Ser. No. 87,742
Int. Cl.[3] B21C *37/16*
U.S. Cl. 72—370 1 Claim

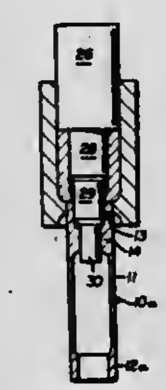

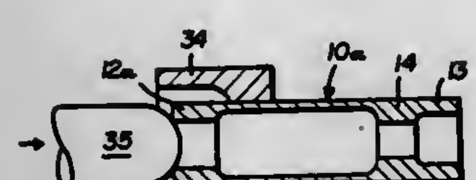

1. A process for extruding a metal tube with annular, thickened end portions at both of its ends, comprising the steps of:
positioning a relatively short, tubular blank within an open ended, tubular die having an inlet end through which the blank is inserted and an opposite extrusion end formed by an annular, inwardly extending, continuous shoulder forming a die extrusion throat through which the blank is extruded, and with the throat diameter being larger than the inner diameter of the blank;
inserting a punch into the die inlet end, with the punch closely fitted within the die and having an annular shoulder engaged against the free end of the blank and having a first punch extension closely fitted within the interior wall of the blank, and having a second punch extension of a smaller diameter than the blank interior diameter extended through part of the blank and die throat, and having a third punch extension, which is formed on the punch co-axial with and extending from the second punch extension, but of smaller diameter than the second punch extension, with the punch shoulder and punch extensions being located co-axially with each other and also with the blank and die throat, and with the second punch extension being located between the first and third punch extensions;
next, moving the punch towards the die throat so that the punch shoulder rams the blank towards the die throat, and simultaneously aligns its second punch extension with the die throat to thereby extrude the lead end of the blank through the annular space between said second punch extension and the die throat to thereby form one thickened end of the metal tube;
continuing moving the punch so that the first punch extension aligns with the die throat to thereby extrude the blank through the annular space between the first punch extension and the throat to form a relatively thin wall metal tube middle portion;
then removing the punch from the die, and inserting a second tubular blank within the die in full end to end contact with the trailing end of the partially extruded blank;
reinserting the punch in the die with its punch shoulder engaging the trailing end of the second blank, and with the punch first extension closely fitted within the second blank so that the punch second extension is aligned with but spaced from the die throat and the third punch extension is positioned within the die throat;
moving the punch in the direction of the die throat to extrude a portion of the first, partially extruded, blank through the annular space between the die throat and third punch extension to form a relatively thick ring adjacent the trailing end of the partially extruded blank, and thereafter proceeding with the step of moving the punch so that the second punch extension moves within the die throat and the second blank pushes the remainder of the first, partially extruded, blank through the annular space between the second punch extension and the die throat to form an inwardly thickened end portion on the trailing end of the first blank, and also, simultaneously extrudes an inwardly thickened end portion on the leading end of the second blank;
then removing the extruded first blank and continuing and repeating the cycle on the second and successive blanks;
expanding one of the thickened end portions of the tube, by pushing an expander ram into its end to flow the thickened end portion thereof outwardly, wherein the tube is of uniform O.D. except for its expanded end portion.

4,301,673
DIE LIFTER UNIT
Keitaro Yonezawa, 14, Aza Hattanda, Hama, Amagasaki, Hyogoken, Japan
Filed Dec. 31, 1979, Ser. No. 108,952
Int. Cl.[3] B21J *13/00*
U.S. Cl. 72—448 12 Claims

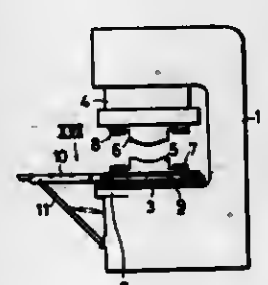

1. A die lifter unit for use in a press, said unit comprising:
a bar-shaped body having a depression on its top surface;
a plurality of rollers carried in said depression;
a pair of hydraulic cylinders provided in said body;

said hydraulic cylinders being connected to each other through an oil path lengthwisely produced in said body;
said oil path being communicated with an oil supply; and
said body being floatably provided in a groove on the top surface of the bolster of said press.

4,301,674
SMOKE DETECTOR TESTER
William H. Haines, 5240 Topeka Dr., Tarzana, Calif. 91356, and Leon C. Cooper, 31316 Via Colinas, Westlake Village, Calif. 91361
Filed Jan. 14, 1980, Ser. No. 111,826
Int. Cl.[3] G01M *19/00*
U.S. Cl. 73—1 G 3 Claims

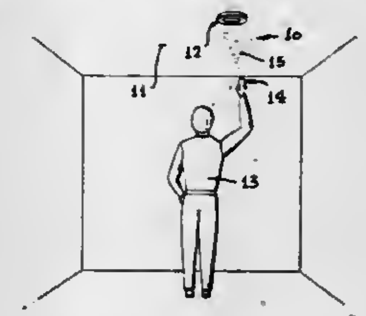

1. In a tester for simulating the presence of products of combustion for activating a smoke detector comprising a hand held pressurized container having a finger operated pressure release valve with a very small aperture which allows for direct spraying, a quantity of material stored in said container which when released under pressure will form a moving cloud of particulate matter simulating products of combustion, and a propellant included in said material which aids driving said cloud material in the desired direction so as to impact said smoke detector,
The improvement consisting of:
said cloud of particulate matter
comprising particle sizes which produce a mean geometric diameter of approximately 0.7 micrometers to 1.2 micrometers, thereby providing an appropriate range of particulate size such as to activate alarms in both the ionization and photoelectric type of detectors at sensitivity levels which indicate the detector is functioning as intended.

4,301,675
MEASUREMENT OF HIGH CONSISTENCY
John R. Wood, Dorion, and Joseph B. S. Beaulieu, Pointe Claire, both of Canada, assignors to Domtar Inc., Montreal, Canada
Filed Feb. 11, 1980, Ser. No. 120,151
Int. Cl.[3] G01N *11/08, 33/34*
U.S. Cl. 73—56 8 Claims

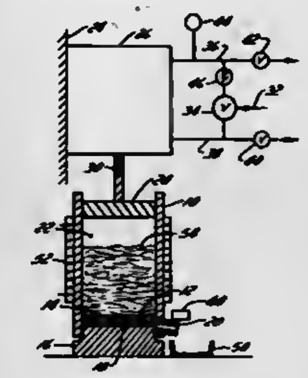

1. An apparatus for determining the consistency of a pulp having a consistency of between a 15 and 55% comprising; a container, a foraminous support means in the bottom of said container adapted to support a pulp sample and permit water from said pulp sample to pass therethrough, a water outlet from said container for water squeezed through said foraminous support means, pressure means for pressing a pulp sample in said container against said foraminous support and squeezing water from said pulp sample, and means for registering the pressure applied to said pulp sample at the initiation of flow of water through said outlet.

4,301,676
METHOD FOR MEASURING THE IONIC ACTIVITIES IN WATER WITH A DIFFERENTIAL PRESSURE TRANSDUCERS
Nev A. Gokcen, Albany, Oreg., assignor to The United States of America as represented by the Secretary of the Interior, Washington, D.C.
Filed May 7, 1980, Ser. No. 147,690
Int. Cl.[3] G01N *7/14*
U.S. Cl. 73—64.2 3 Claims

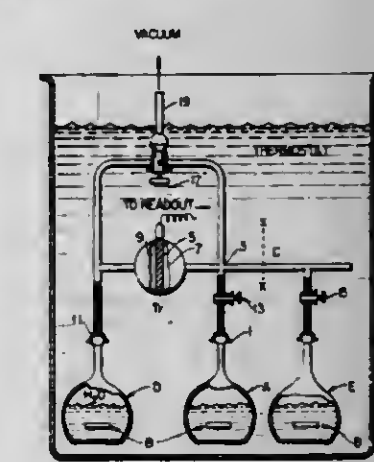

1. A method of accurately determining the vapor pressure of a solution comprising the steps of:
(a) placing the solution in a container having a fluid communication system maintained at a known controllable temperature;
(b) placing a reference liquid with a known vapor pressure in the same system as the solution at the same temperature;
(c) stirring the solution and reference liquid of steps (a) and (b) by over 100 revolutions per minute;
(d) measuring the vapor pressure difference in the system between the liquid and the solution using a pressure difference transducer; and
(e) based upon the results of step (d) and the known vapor pressure of the liquid, determining the vapor pressure of the solution for the given temperature of the system.

4,301,677
MEASURING DEVICE FOR USE WITH TUBULAR PRODUCTS
Frederick M. Fisher, Enfield, Conn., assignor to Electric Power Research Institute, Palo Alto, Calif.
Filed Oct. 4, 1979, Ser. No. 81,657
Int. Cl.[3] G01B *5/28*
U.S. Cl. 73—105 7 Claims

1. Apparatus for detecting denting in the internal surface of a tube due to corrosion of support plates comprising support means of suitable dimensions for moving through said tube, said support means including an outer housing and a plurality of spring means for engaging said internal surface and maintaining said outer housing generally in line with the center line of said tube; a plurality of flexible members extending from said support means, each of said flexible members having a surface

portion for engaging said internal surface; transducer means mounted on each of said flexible members for sensing flex of

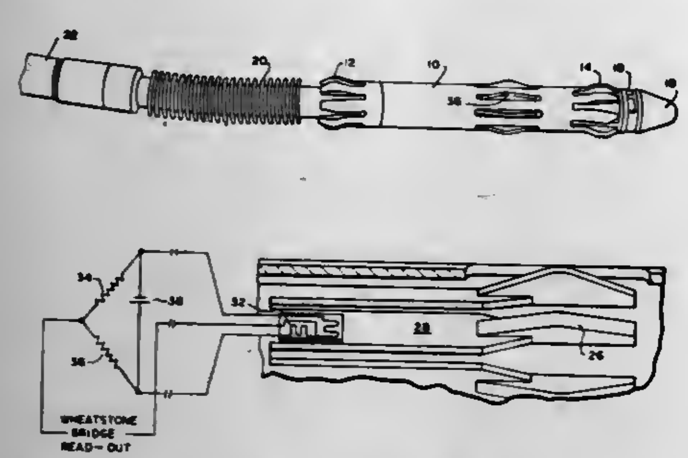

said member; and eddy current detection means for detecting the presence of tube support structures.

4,301,678
RELATIVE POWER CONTRIBUTION OF AN INTERNAL COMBUSTION ENGINE
Gary G. Full, Ellington, and Rinaldo R. Tedeschi, Newington, both of Conn., assignors to United Technologies Corporation, Hartford, Conn.
Filed Dec. 20, 1979, Ser. No. 105,447
Int. Cl.³ G01M *15/00*
U.S. Cl. 73—116 **5 Claims**

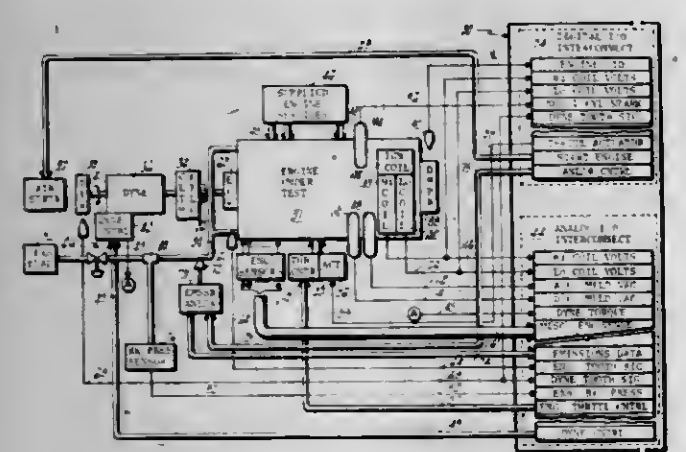

4. The method of measuring the relative power contribution between cylinders of an internal combustion engine connected through its crankshaft to the drive shaft of an engine load and running at a selected speed, comprising:
sensing the instantaneous angular position of the drive shaft to provide crankshaft position signals manifesting the instantaneous position of the engine crankshaft at successive angle intervals within the engine cycle, each angle interval being less than that associated with a cylinder sub-cycle;
measuring the actual speed of the engine crankshaft and the load drive shaft at each crankshaft position signal value to provide an indication of the sub-cyclic fluctuations in angular acceleration of each as they occur over one engine cycle;
providing engine torque and load torque signals over at least one engine cycle by multiplying the respective values of angular acceleration by the rotational inertia of the engine and load;
calculating a net torque value for each crankshaft position signal value as the difference values between said engine and load torque signals, to provide an indication of the sub-cyclic fluctuations in net torque over one engine cycle, and
comparing the magnitudes of said sub-cyclic fluctuations in a common engine cycle to provide signal indications of the relative power contribution between cylinders.

4,301,679
WELL FLOW SAMPLING SYSTEM
George J. Boyle, Neston, and Norman Coleclough, Bromborough, both of England, assignors to Shell Oil Company, Houston, Tex.
Filed Dec. 20, 1979, Ser. No. 105,810
Claims priority, application United Kingdom, Feb. 2, 1979, 3826/79
Int. Cl.³ E21B *47/00*
U.S. Cl. 73—155 **18 Claims**

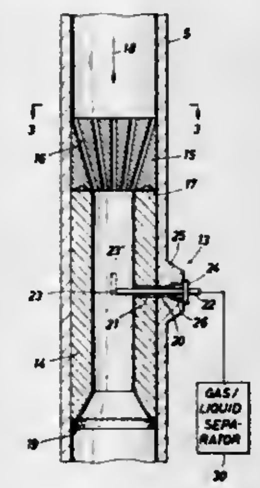

1. Method of taking a sample from a flow of fluid passing out of a well communicating with a permeable subsurface formation, which fluid comprises gaseous and liquid components, comprising the steps of:
allowing said fluid to flow from said well at a predetermined pressure;
dividing the fluid into a plurality of streams having axes which converge at a common downstream point;
mixing the streams of said fluid at said downstream point;
draining a sample stream of said mixed components at said predetermined pressure; and,
storing said components at a pressure that is approximately equal to said predetermined pressure.

4,301,680
APPARATUS AND SYSTEM FOR MEASURING POWER OF HEAT RADIATION
Evgeny I. Lunev, ulitsa Shkolnaya, 11, kv. 56, Moskovskaya oblast, Troitsk; Alexandr P. Leonov, 19, kv. 37, Moskovskaya oblast, Mosrentgen; Nina P. Kosyreva; Felix K. Kosyrev, both of ulitsa Tsentralnaya, 14, kv. 27, Moskovskaya oblast, Troitsk; Valery A. Timofeev, ulitsa Zavodskaya, 9/1, kv. 14; Anatoly K. Pekh, ulitsa Fevralskaya, 6, kv. 6, both of Moskovskaya oblast, Klimovsk; Alexei S. Kononykhin, ulitsa Akademicheskaya, 9, kv. 304, and Alexei V. Artamonov, ulitsa Lesnaya, 5, kv. 13, both of Moskovskaya oblast, Troitsk, all of U.S.S.R.
Filed Dec. 4, 1978, Ser. No. 965,877
Int. Cl.³ G01K *17/00;* **G01J** *5/20*
U.S. Cl. 73—190 EW **19 Claims**

1. An apparatus for measuring the power of heat radiation, comprising:
a sensitive element including an electrically conductive filament having a zig-zag or wave-like configuration and arranged in relation to the heat radiation flux for exposure

of only successive portions of said filament to said heat radiation flux upon displacement relative to the latter; and

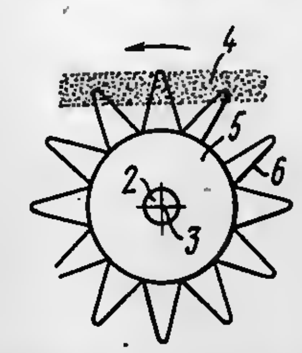

a meter for registering the variations of the temperature of said electrically conductive filament resulting from the heat radiation.

4,301,681
METHOD OF USING CAPACITOR PROBE WITH A SEMICONDUCTIVE ELECTRODE
Frederick L. Maltby, Jenkintown; Kenneth M. Loewenstern, Warminster, and Jack G. Benning, Jr., Lansdale, all of Pa., assignors to Drexelbrook Controls, Inc., Horsham, Pa.
Filed Sep. 6, 1979, Ser. No. 72,833
Int. Cl.³ G01F *23/26*
U.S. Cl. 73—304 C **19 Claims**

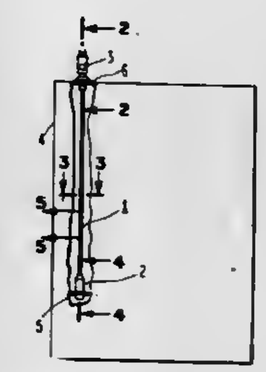

1. A method for measuring the level of conductive materials within a vessel comprising the steps of:
providing a probe comprising:
(a) a conductive core electrode;
(b) an insulating coating on said core; and
(c) an outermost semi-conductive coating on
said insulation, whereby said semi-conductive coating becomes an equipotential surface with respect to said core where covered by conductive materials; and
measuring the capacitance between said core and said equipotential surface.

4,301,682
INFRARED THERMOMETER IN MAKING STRESS-DEGREE MEASUREMENTS FOR IRRIGATION PURPOSES
Charles E. Everest, 11662 Placian Way, Santa Ana, Calif. 92705
Filed Aug. 24, 1979, Ser. No. 69,269
Int. Cl.³ G01J *5/16*
U.S. Cl. 73—355 R **7 Claims**

1. An apparatus for measuring the difference in the respective temperatures of an object and ambient air adjacent the object, the apparatus comprising:
a. an infrared detector for receiving infrared radiation including infrared radiation emitted by said object and for generating a first electrical signal indicative of the intensity of said received radiation,
b. a heat sink mass in physical contact with said infrared detector,
c. a first temperature detection device generating a second electrical signal and being in physical contact with said heat sink mass and in close proximity to said infrared detector,
d. a second temperature detection device generating a third electrical signal and being separated from said heat sink mass and from said infrared detector and exposed to changes in temperature of said ambient air,
e. said first electrical signal increasing with increasing infrared radiation intensity, said second electrical signal de-

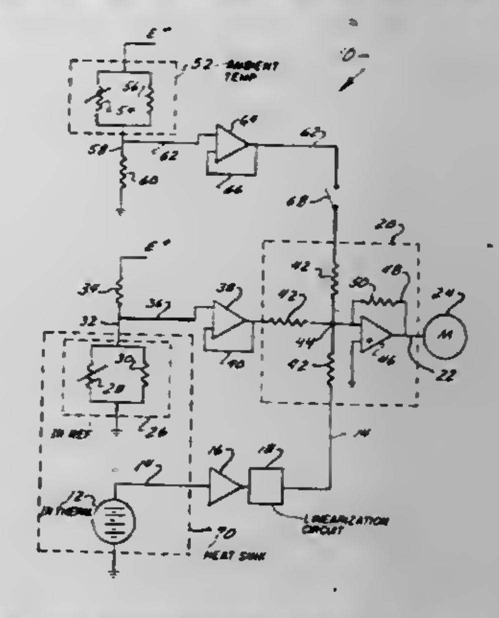

creasing with increasing temperature, said third electrical signal increasing with increasing temperature,
f. electrical circuit means connected to the respective outputs of said infrared detector and of said first and second temperature detection devices for generating a measurement signal representative of the sum of said first, second and third electrical signals, and
g. means for displaying a visible manifestation of said measurement signal.

4,301,683
ELASTIC SURFACE WAVE ACCELEROMETER
Pierre Hartemann, and Jean-Paul Castera, both of Paris, France, assignors to Thomson-CSF, Paris, France
Filed Nov. 27, 1979, Ser. No. 97,662
Claims priority, application France, Nov. 30, 1978, 78 33804
Int. Cl.³ G01P *15/08*
U.S. Cl. 73—517 R **10 Claims**

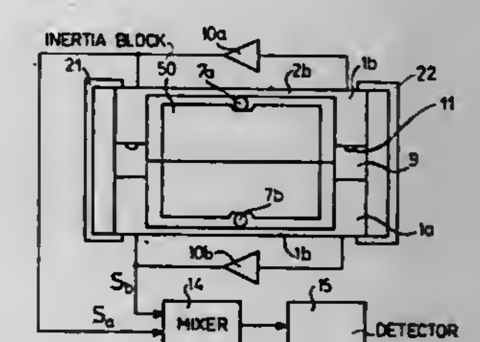

1. An accelerometer using elastic surface waves, comprising:
a frame;
at least one elastic plate having opposing edges supported in said frame and subjected to the acceleration which is to be measured;
means for emitting and means for receiving elastic surface waves on a front surface of said plate;
amplifying means connecting said emitting means and said receiving means, so as to form an oscillator, the oscillation frequency of which is modulated by said acceleration;
means for detecting the modulation of said oscillation frequency;
mass means responsive to said acceleration for applying to the back surface of said plate a force causing deformation

of said plate, said force being always located in a plane containing the normal to a flat central area of said back surface whatever is the direction of said acceleration; said mass means comprising a solid body having at least one flat central area and a rolling element pinched between said flat central areas.

4,301,684
ULTRASONIC NON-DESTRUCTIVE EVALUATION TECHNIQUE FOR STRUCTURES OF COMPLEX GEOMETRY
Robert B. Thompson, Thousand Oaks, Calif.; Carmine F. Vasile, Huntington, N.Y., and Roger B. Houston, Newbury Park, Calif., assignors to Rockwell International Corporation, El Segundo, Calif.
Filed Jan. 31, 1980, Ser. No. 117,157
Int. Cl.[3] G01N *29/04*
U.S. Cl. 73—602 9 Claims

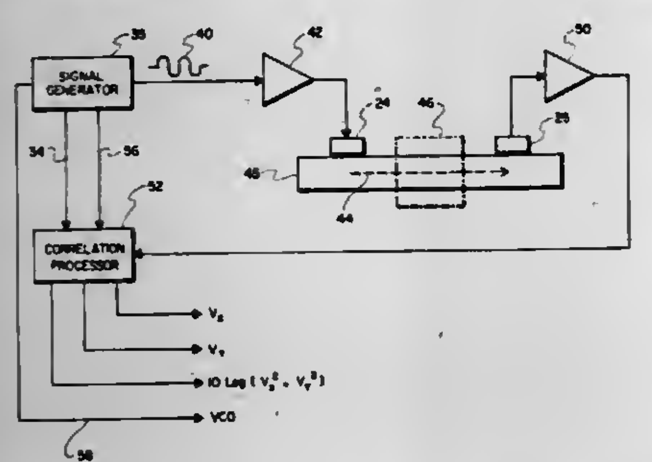

1. A method of evaluating the structural integrity of an object, comprising the steps of:
(a) generating an acoustic signal in the object;
(b) detecting the acoustic signal after it has propagated in the object;
(c) transforming the response in time of the detected signal into a frequency dependent response;
(d) comparing the passband of the frequency response, treating the object as an acoustic bandpass filter, to the passband for a standard object of known structural integrity; and
(e) predicting the structural integrity of the object from the modified passband of the object.

4,301,685
DIGITAL PRESSURE-MEASURING DEVICE
Philippe Guillemot, Paris, France, assignor to Mecilec, Paris, France
Filed Jun. 28, 1979, Ser. No. 52,980
Claims priority, application France, Jun. 30, 1978, 78 19575; Jul. 18, 1978, 78 21215
Int. Cl.[3] G01L *9/08*
U.S. Cl. 73—723 1 Claim

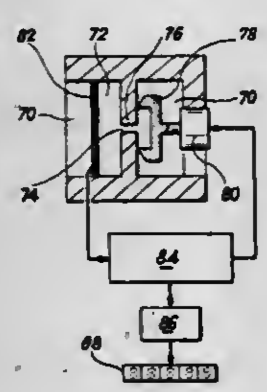

1. A digital pressure-measuring device, comprising a first chamber subjected to the pressure to be measured; a second chamber subjected to a reference pressure and connected to the first chamber through at least one opening fitted with a valve which is constituted by a piezoelectric element associated with a nozzle; non-mechanical means for measuring the difference both in magnitude and in sign between the pressures prevailing respectively within the first chamber and the second chamber, said means being adapted to deliver an electrical signal as a function of said difference; a circuit for detecting the instants at which said difference attains a predetermined small increment $+\Delta P$ and a predetermined small decrement $-\Delta P$ and for detecting the instants at which said difference becomes zero; means connected to said circuit and capable of initiating the opening of the valve or valves when the difference attains the values $\pm\Delta P$ and of initiating closure of said valve or valves when said difference becomes zero; and bidirectional counting means connected to said circuit and adapted to account for the number of increments $+\Delta P$ obtained and reduced by the number of decrements $-\Delta P$ obtained.

4,301,686
MASS RATE OF FLOW METER WITH IMPROVED MAGNETIC CIRCUIT
Malcolm H. Allen, Jr., Melrose, Mass., assignor to General Electric Company, Wilmington, Mass.
Filed Oct. 12, 1979, Ser. No. 84,389
Int. Cl.[3] G01F *1/80*
U.S. Cl. 73—861.35 4 Claims

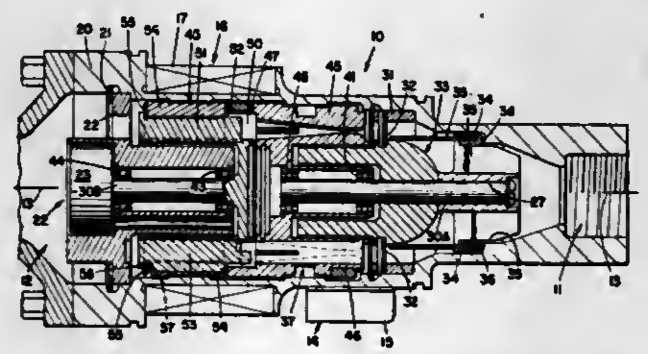

1. In a mass rate of flow meter including a housing with inlet and outlet ports for defining a flow passage therebetween, swirl generating means in the housing at the input port for imparting angular velocity to a fluid flowing through said housing, a rotor means in the housing having an input end spaced from the swirl generating means and an exit end for conveying fluid from the swirl generator therethrough and for rotating in an unrestrained manner the rotor means including first magnetic means at an input end thereof, sensing coil means disposed on the housing for sensing the passage of the first magnetic means past the first sensing coil to produce a first signal; and restrained turbine means having an input end spaced from the exit end of the rotor means and an output end disposed adjacent to the output port of the housing, the improvement comprising means for sensing the deflection of the restrained turbine, said sensing means including:
A. Second magnetic means disposed near the periphery of the rotor at the exit end thereof in a predetermined relationship to the first magnetic means for generating magnetic flux,
B. Magnetic flux linkage means positioned in intermittent radial flux exchange relationship with said second magnetic means, said flux linkage means being disposed on the turbine means at a predetermined, circumferential position and having an end portion extending axially toward the rotor means, said magnetic flux linkage means and said second magnetic means moving in coaxial paths and being partially overlapped axially to define a radial air gap therebetween, when said magnetic flux linkage means and said second magnetic means come into said intermittent relationship, and
C. Second sensing coil means disposed on the housing and being axially coextensive with at least a portion of said magnetic flux linkage means whereby the passage of said second magnetic means by said magnetic flux linkage means produces a flux change that induces a signal in said second sensing coil means.

4,301,687
PNEUMATIC TENSION SENSOR
James W. Jewitt, King of Prussia; Ross W. Johnston, Norristown, both of Pa., and Sanford Platter, Boulder, Colo., assignors to Computer Peripherals, Inc., Minneapolis, Minn.
Filed May 19, 1980, Ser. No. 151,496
Int. Cl.[3] G01L *5/08*
U.S. Cl. 73—862.45 3 Claims

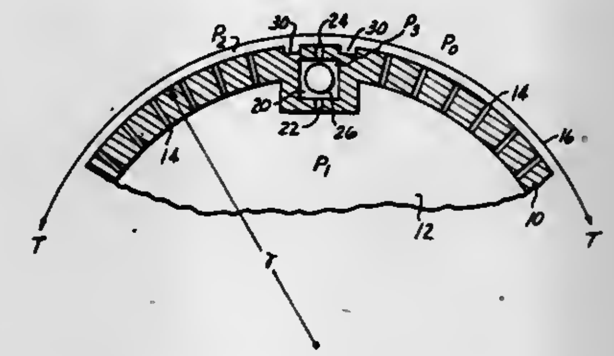

1. In a fluid bearing having a source of pressurized fluid and a plurality of metered orifice means in fluid communication between said source and the periphery of said bearing to form a fluid bearing for supporting a flexible tape under tension, a tension sensor comprising: a chamber within said bearing; pressure sensing means for sensing the pressure of fluid within said chamber; first metered orifice means providing fluid communication between said chamber and the periphery of said bearing; and second metered orifice means providing fluid communication between said chamber and said source of pressurized fluid.

4,301,688
PUMP OPERATING MECHANISMS
Renato Salvati, Bucarelli St. 2557, Buenos Aires, Argentina
Filed Aug. 8, 1979, Ser. No. 64,751
Claims priority, application Argentina, Aug. 8, 1978, 273238; Jul. 10, 1979, 277243
Int. Cl.[3] F16H *19/06, 37/00*
U.S. Cl. 74—37 8 Claims

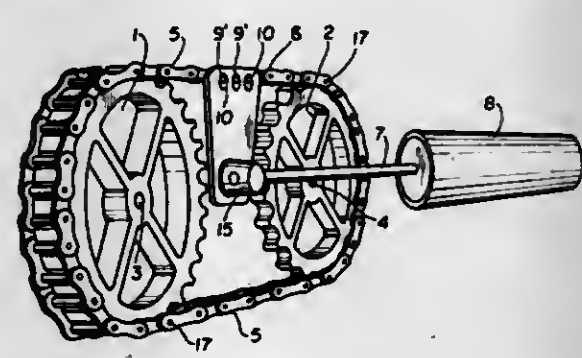

1. Pump operating mechanism to provide a long power stroke for a pump piston rod (7) or the like having
a support frame (11, 12);
two spaced wheels (1, 2) mounted on said frame, aligned in a single plane and having parallel axes of rotation;
an endless roller link chain (5) looped about said wheels, said chain defining an area enclosed therein within which said wheels are positioned;
drive means (13) drivingly connected to at least one of said wheels;
a plate (6);
means (15) pivotally connecting the piston rod (7) to the plate;
and attachment means securing said plate (6) to said chain (5) comprising
three bolts (9, 9') corresponding to an equal number of pins joining links of the roller link chain adjacent each other, said plate being formed with openings receiving said bolts, the end openings being elongated to permit travel of the chain, with the plate attached, about said wheel and pivoting by the plate with respect to the links of the link chain;
said plate projecting into said area, being positioned parallel to the wheels and a small distance from them, and extending at least two an imaginary line connecting the two axes of said wheels, the free end of said plate coinciding with said imaginary axis of alignment of the axes of the wheels,
the plate moving in unison with said chain and pivoting in a plane parallel to the plane of said wheels, the piston rod pivot means (13) being positioned on said plate at said imaginary straight line and remaining at all times contained in an imaginary parallel and aligned plane including said line and at the same level as said imaginary straight line which connects the axes of said wheels.

4,301,689
TRANSMISSION CONTROL SYSTEM
Joe H. Peppel, Horton, Mich., assignor to Clark Equipment Company, Buchanan, Mich.
Continuation of Ser. No. 779,445, Mar. 21, 1977, abandoned.
This application Nov. 20, 1978, Ser. No. 974,657
Int. Cl.[3] F16H *5/42; F16D 19/00*
U.S. Cl. 74—336 R 11 Claims

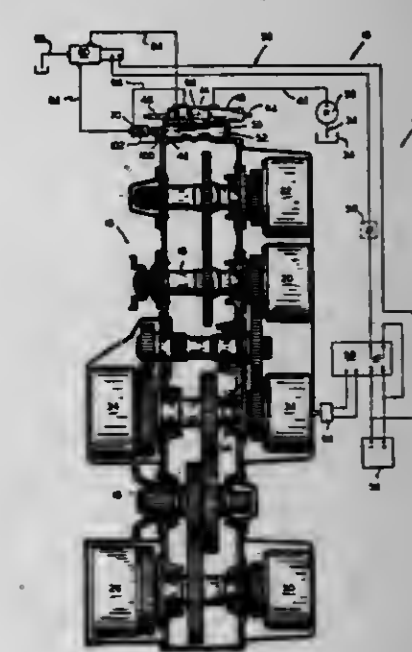

1. In a transmission control system for a vehicle including a multiple speed ratio power shift transmission having a plurality of fluid pressure operated clutches, adapted to establish torque ratio changes, a source of pressurized fluid, a speed control cover including manually-actuated control means and a speed control valve, for controlling the flow of fluid to said clutches, wherein the improvement comprises an electronic speed sensing system and downshift valve means, for automatically shifting said transmission one step from a higher speed ratio to a lower speed ratio at a first predetermined ground speed by diverting the fluid for pressurizing a higher speed ratio clutch to a lower speed ratio clutch and automatically shifting said transmission said one step from said lower speed ratio back to said higher speed ratio at a second predetermined ground speed, differing from said first predetermined ground speed, by ceasing the diverting of said fluid, with the diverting of said fluid being possible only when the setting of said speed control valve corresponds with said higher speed ratio; said electronic speed sensing system including an electronic signal generator operatively connected with said transmission for producing an

electronic pulse signal proportional to vehicle road speed, an electronic speed switch actuated via said electronic pulse signal for producing a continuous signal below a first predetermined vehicle road speed and terminating at a second higher predetermined vehicle road speed, and a solenoid valve actuated via said continuous signal from said electronic speed switch, said solenoid valve being hydraulically interconnected with said speed control cover only when the setting of said speed control valve corresponds with said higher speed ratio for providing a pressure for actuating at least a portion of said downshift valve means.

4,301,690
GEAR SHIFTING MEANS
Paul D. Cavanagh, 495 Newbury St., Danvers, Mass. 01923
Filed Dec. 5, 1979, Ser. No. 100,387
Int. Cl.³ F16H *3/08;* F16D *21/04, 43/02*
U.S. Cl. 74—363 8 Claims

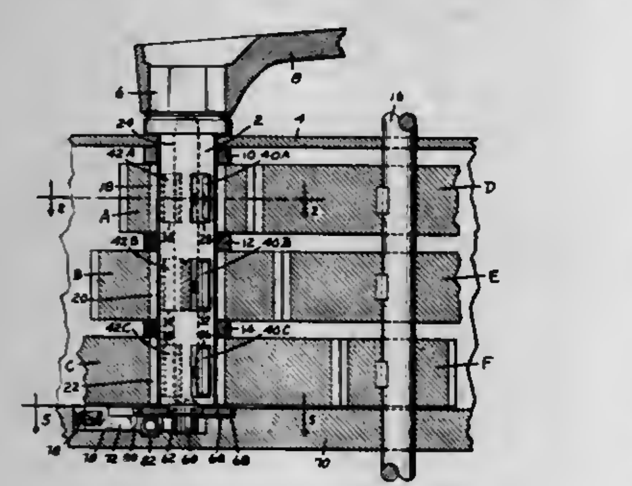

1. A tubular shaft,
a cylindrical shaft within and concentric with said tubular shaft,
means for maintaining said shafts in fixed relation when said tubular shaft is rotated in one direction,
means for limiting rotation of said tubular shaft in the opposite direction to not more than one revolution,
and means actuated by said limited rotation of said tubular shaft in the said opposite direction to cause said cylindrical shaft to rotate through a predetermined additional angle in said opposite direction with respect to said tubular shaft.

4,301,691
RACK STEERING MECHANISM
Wolfgang Walter, Schwabisch Gmund, Fed. Rep. of Germany, assignor to Zahnradfabrik Friedrichshafen, AG., Friedrichshafen, Fed. Rep. of Germany
Filed Dec. 3, 1979, Ser. No. 99,807
Claims priority, application Fed. Rep. of Germany, Dec. 1, 1978, 2852021
Int. Cl.³ F16H *1/04*
U.S. Cl. 74—422 9 Claims

1. In a rack steering mechanism of the kind having a cylinder with a reciprocal rack passing therethrough and steering connections at respective ends of said rack with protective bellows encompassing respective steering connections and including a cylinder closure means and rack drive means at one end of said cylinder and a cylinder closure means at the opposite end of said cylinder slidably supporting said rack and further including an air equalization tube connecting said bellows;
the improvement wherein:
said latter cylinder closure means (3) comprises a bearing (17) encompassing said rack (5) for reciprocal guidance and support;
said bearing and cylinder having respective peripheral corrugations in nesting coaction to secure said bearing to said cylinder;
a sleeve (18) encompassing said cylinder and having a corrugation (22) nesting with the corrugation of said cylinder to be secured thereto;

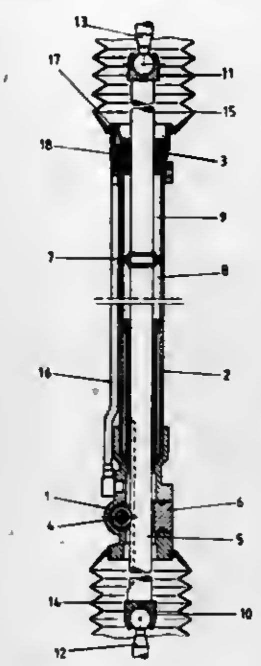

said sleeve having a through passage and means for connecting a protective bellows and an air equalization tube to said sleeve for air passage there between.

4,301,692
GEAR SELECTOR HAVING REVERSE INHIBITOR AND BACKUP LIGHT SWITCH
William T. Frazee, Plymouth, Mich., assignor to Ford Motor Company, Dearborn, Mich.
Filed Nov. 5, 1979, Ser. No. 90,951
Int. Cl.³ G05G *5/10;* H01H *3/16*
U.S. Cl. 74—476 10 Claims

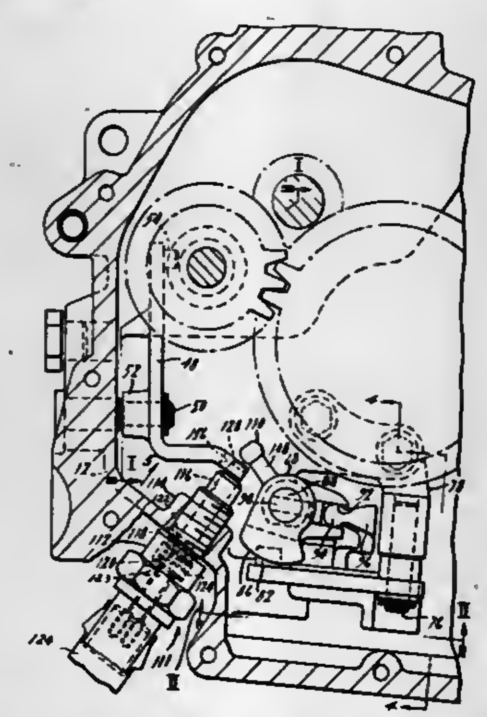

1. In a power transmission having a movable pinion adapted to establish driving engagement with a gear, a gear shift mechanism for establishing and disestablishing the driving engagement, comprising:
a first lever mounted for rotation about an axis adapted to cause engagement and disengagement of the pinion and the gear;
a selector shaft adapted for angular rotation and linear displacement responsive to operator control;
locking means adapted to engage said first lever and to prevent rotaion of said first lever;
means forming a connection between said first lever and said selector shaft for producing linear displacement of the pinion in response to linear displacement of said selector shaft and disengagement of said locking means from said first lever in response to rotation of said selector shaft, whereby the pinion is moved into driving engagement with the gear in response to linear movement of said selector shaft.

4,301,693
HAND BRAKE FOR RAILROAD CARS
Richard B. Stanley, 520 Shorely Dr., Barrington, Ill. 60010
Filed Apr. 12, 1978, Ser. No. 895,617
Int. Cl.³ G05G *1/08;* F16H *1/28;* B66D *1/22*
U.S. Cl. 74—505 17 Claims

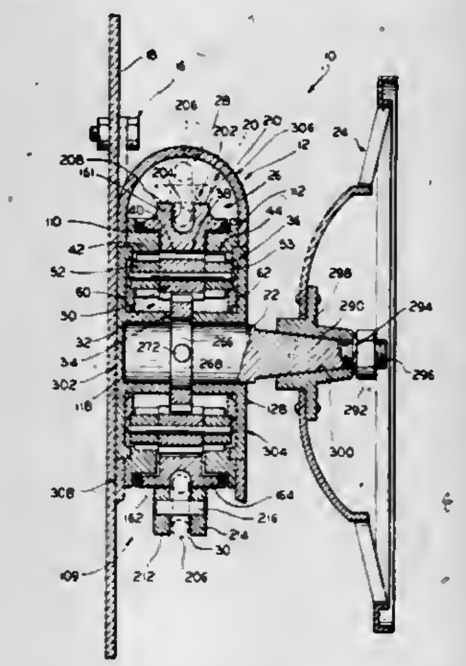

1. In a hand brake for railroad cars including a housing adapted to be mounted on a car, an operating shaft journalled in said housing for rotation about an axis extending longitudinally of said shaft, a winding drum journalled in said housing for rotational movement about said axis and including means for connecting a brake chain thereto for being wound up thereby, and means for coupling said operating shaft to said winding drum for rotating said winding drum about said shaft axis with a mechanical advantage to wind up the brake chain, the improvement including:
a pair of fixed internal gears mounted in said housing in fixed relation to said housing and coaxial with said axis,
said internal gears having equivalent pitch diameters and being spaced apart longitudinally of said axis,
said winding drum defining an annular gear interposed between said internal gears that is coaxial with said shaft axis,
a sun gear fixed to said shaft for rotation therewith about said axis with said sun gear being coaxial with said axis,
one or more planetary gear assemblies mounted in said housing for orbiting movement about said axis,
said planetary gear assemblies each comprising:
a central pinion gear portion meshing with said sun gear and said winding drum gear,
and a pair of side pinion gear portions disposed one on either side of said central gear portion,
said side gear portions respectively meshing with the respective fixed internal gears,
said fixed internal gears having the same number of teeth,
said gears comprising said coupling means,
said side gear portions of the respective planetary gear assemblies each having the same number of teeth, which number is different from the number of teeth of said central gear portion,
said winding drum being journalled on and between said internal gears on bearing surfaces defined thereby having diameters that exceed the pitch diameters of said internal gears and said annular gear.

4,301,694
HAND-OPERATED LEVER LINKAGE CONTROL
Larry J. Costa, Danville, Ill.
Filed Nov. 17, 1978, Ser. No. 961,496
Int. Cl.³ G05G *1/04*
U.S. Cl. 74—518 9 Claims

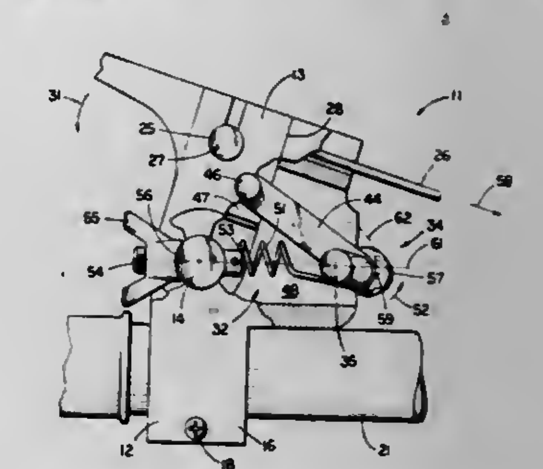

1. A hand-operated lever linkage control, comprising:
(a) a housing including means for attaching said housing to a vehicle;
(b) a lever assembly pivotally mounted in said housing and including means for connecting a control linkage thereto, said means for connecting including means for actuating the control linkage by pivotal movement of said lever assembly between a rest and an actuated position; and
(c) spring-tensioned pivoting eccentric means in said housing and connected to said lever assembly for mechanically assisting lever travel during actuation of the control linkage, said spring-tensioned pivoting eccentric means including:
(1) an eccentric assembly pivotally mounted in said housing, said eccentric assembly including:
(a) a pair of fulcrum pivots rotatably mounted in opposing sides of said housing forward of said lever assembly; and
(b) a rigid member eccentrically mounted between said fulcrum pivots and rotatable therewith, said linkage means being a pair of rigid linkage arms pivotally attached between said rigid member and said lever assembly;
(2) a linkage member connecting said eccentric assembly and said lever assembly; and
(3) a coil spring tensioned between said housing and said eccentric assembly for urging pivotal movement of said eccentric assembly and for providing a mechanical advantage through said linkage member to assist lever travel during actuation of the control linkage.

4,301,695
RECIPROCATING PISTON MACHINE
John H. Reiber, 1071 Nakomis, Lake Orion, Mich. 48035
Filed Jan. 14, 1980, Ser. No. 112,133
Int. Cl.³ F16C *3/30*
U.S. Cl. 74—602 28 Claims

1. In a reciprocating piston machine comprising a cylinder, a piston reciprocatingly received in said cylinder, a rotatable crankshaft having a first axis of rotation, said crankshaft comprising a crank-pin offset laterally from said first axis of rotation and having a second axis parallel to said first axis, a connecting rod having a first end pivotally mounted on said crank-pin about a third axis and pivotally connected at a second end thereof which is remote from said first end and said crank-pin to said piston, said third axis being offset laterally from said first axis, means for constraining said third axis to follow a

predetermined locus as said crankshaft is rotated, said constraining means comprising relatively rotatable at least first and second eccentric bearing means operatively carried by said crank-pin as to be at least partly rotatable thereabout and at least partly rotatable within said first end of said connecting rod, and motion transmitting means operatively interconnecting said crankshaft and said connecting rod with said first and second eccentric bearing means, said motion transmitting means being effective to cause one of said rotatable eccentric

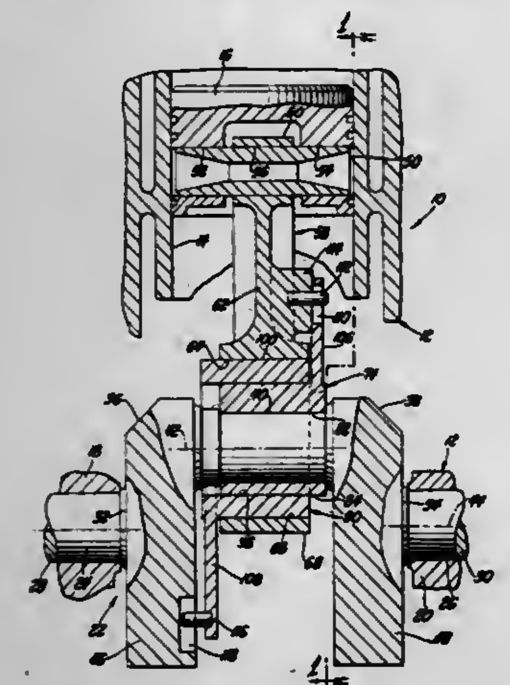

bearing means to experience one complete revolution relative to said crank-pin for each complete revolution of said crankshaft about said first axis while experiencing only limited rotation and translation relative to said first end of said connecting rod, said motion transmitting means also being effective to cause the other of said at least first and second eccentric bearing means to experience one complete revolution relative to said first end of said connecting rod for each complete revolution of said crankshaft about said first axis while experiencing only limited rotation and translation relative to said crank-pin.

4,301,696

METHOD AND AN ARRANGEMENT FOR THE COMPENSATION OF INERTIA FORCES IN THE INDEXING MOVEMENT OF A MACHINE ELEMENT

Pär M. Andersson, Bjärred, Sweden, assignor to Tetra Pak International AB, Lund, Sweden

Filed Oct. 17, 1979, Ser. No. 85,731

Claims priority, application Sweden, Oct. 25, 1978, 7811077

Int. Cl.³ B23Q *17/00;* F16H *53/06*

U.S. Cl. 74—821 9 Claims

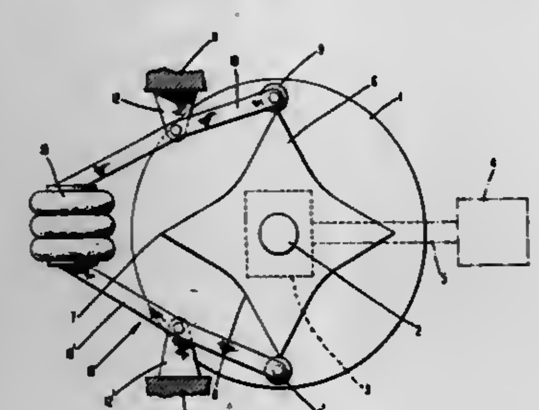

1. An apparatus for compensating inertia forces comprising:
a rotary element;
means for drivingly indexing said element between a plurality of discrete angular stop positions;
a cam, said cam having a cam surface contoured with a plurality of peaks corresponding to said discrete angular positions;
means for mounting said cam for rotation with said element;
a first cam follower in engagement with said cam surface, said cam surface and said cam follower cooperating to initially assist rotation of said element and to subsequently resist rotation of said element between consecutive ones of said discrete angular positions; and
means for urging the first cam follower against one of the peaks of the cam surface when the element is at each of the discrete angular positions and imposing substantially zero torque on said element at each of the discrete angular positions.

4,301,697

HYDRAULIC CONTROL SYSTEM FOR AUTOMATIC POWER TRANSMISSION HAVING TRANSMISSION THROTTLE VALVE WITH FAILSAFE MEANS

Kazuyoshi Iwanaga, Yokohama; Kazuhiko Sugano, Tokyo, and Kunio Ohtsuka, Yokohama, all of Japan, assignors to Nissan Motor Company, Limited, Yokohama, Japan

Continuation-in-part of Ser. No. 959,027, Nov. 8, 1978, abandoned. This application Mar. 23, 1979, Ser. No. 23,477

Claims priority, application Japan, Sep. 1, 1978, 53-106284; Nov. 8, 1978, 53-106286

Int. Cl.³ B60K *41/10*

U.S. Cl. 74—869 15 Claims

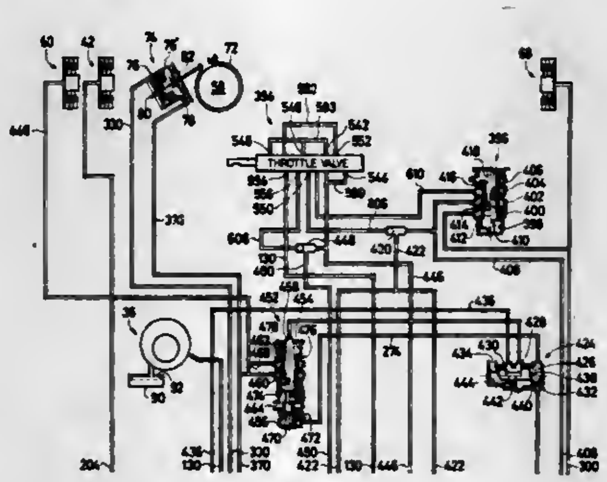

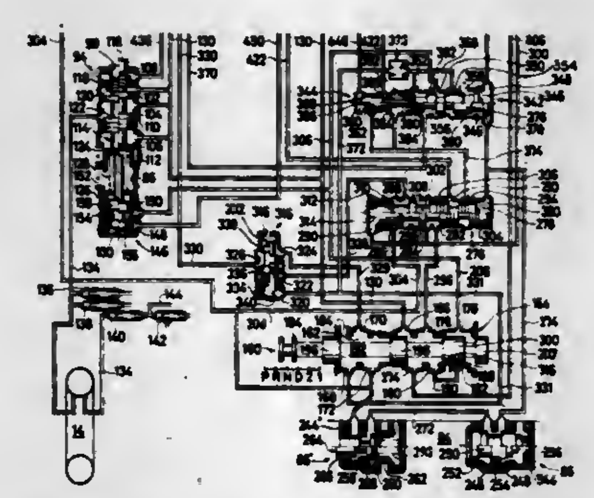

1. In an automotive power transmission for an automotive vehicle including an acceleration producing member movable between a released position and a fully accelerating position wherein the power transmission includes a transmission mechanism having incorporated therein fluid operated frictional units to be selectively actuated to produce a plurality of gear ratios in the transmission mechanism, a hydraulic control system for the transmission mechanism, comprising:
a pressure regulator valve for producing a line pressure;
at least one shift valve through which the line pressure delivered from the pressure regulator valve is to be distributed selectively to said frictional units;

a transmission throttle valve engaged by said acceleration producing member through a mechanical linkage;
first passageway means providing communication between said throttle valve and said shift valve; and
second passageway means for providing communication between the throttle valve and said pressure regulator valve;
the transmission throttle valve including means for developing in both of the first and second passageway means, a throttle pressure continuously variable with the movement of said acceleration producing member between said released position and said fully, accelerating position in the absence of a failure in said mechanical linkage and to discharge fluid pressure from the first passageway means and pass the line pressure to the second passageway means through the throttle valve in response to a failure brought about in the mechanical linkage.

4,301,698

DEVICE FOR DEPOSITING A PASTY SUBSTANCE ON A SURFACE AUTOMATICALLY AND AUTOMATIC MACHINE THEREFOR

Bertrand Saint Georges Chaumet, La Celle Saint Clond, France, assignor to Intrama S.A., Paris, France

Filed Jun. 18, 1980, Ser. No. 160,456

Claims priority, application France, Jul. 3, 1979, 79 17190

Int. Cl.³ B25B *23/14*

U.S. Cl. 81—468 11 Claims

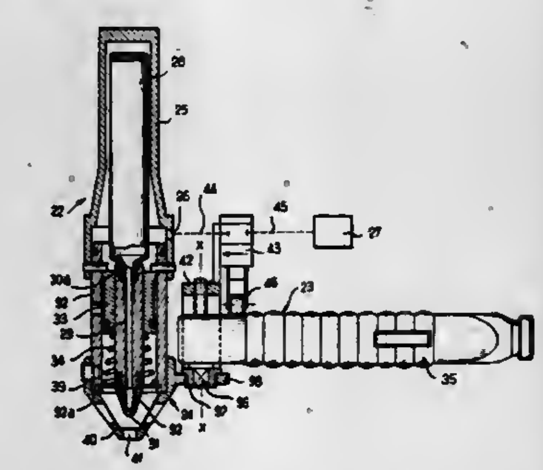

1. Device for automatically depositing on a surface, a pasty substance packaged in a fluid-tight and flexible reservoir, said reservoir being removably fixed in a fluid-tight housing, the outlet orifice from this reservoir for the pasty substance being connected to an outlet nozzle including at its free end a cut-off valve which can be opened by contact with the surface, said housing being connected to a source of pressurized gas and means being provided to control the admission of this gas into the housing, said housing comprising a cylinder open at its free end and surrounding the outlet nozzle, a slidably mounted piston made fast to said nozzle inside said cylinder, means being provided to control the sliding of said piston towards the open end of said cylinder, so as to cause the outlet nozzle to project outside the open end of the cylinder, comprising also means for returning said piston into said housing after the cessation of the action of the pressurized gas.

4,301,699

DRILL ACTUATING MECHANISM

Roy F. Butler, 1008 E. Vista del Cerro, Tempe, Ariz. 85281

Filed Jan. 9, 1980, Ser. No. 110,678

Int. Cl.³ B23B *3/36, 39/05, 5/26*

U.S. Cl. 82—34 R 2 Claims

1. A drill actuating mechanism for use in combination with a sensitive drill adapter having a rotatably mounted finger ring, and with a machine tool having chucking means for holding said drill adapter, and for reciprocal movement of said drill adapter relative said machine tool, said drilling actuating mechanism comprising:
a. attachment means detachably securable to said machine tool;
b. engagement means detachably securable to said drill adapter and including
i. means defining an opening sized to receive said finger ring therethrough, and
ii. a pair of diametrically opposed pivot elements extending into said opening and detachably engagable with said finger ring;

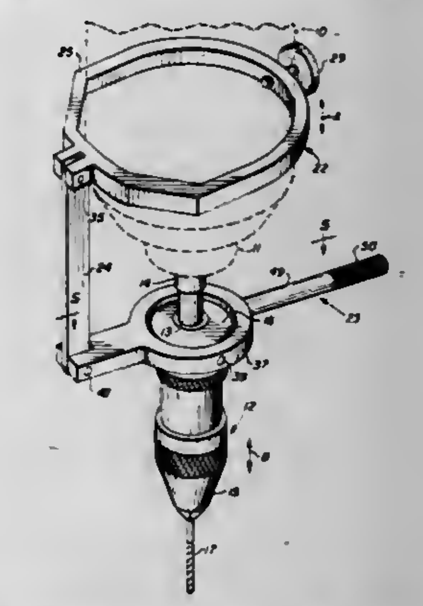

c. connection means extending from said engagement means;
d. a link having a first pivotal connection with said attachment means and a spaced apart second pivotal connection with said connection means; and
e. a lever arm extending from said engagement means,
said drill adapter being movable in response to movement of said lever arm.

4,301,700

CUTTING APPARATUS

Richard Greven, Escondido, Calif., assignor to Unicel Corporation, Escondido, Calif.

Filed Mar. 10, 1980, Ser. No. 129,086

Int. Cl.³ B26D *5/32, 5/34*

U.S. Cl. 83—91 13 Claims

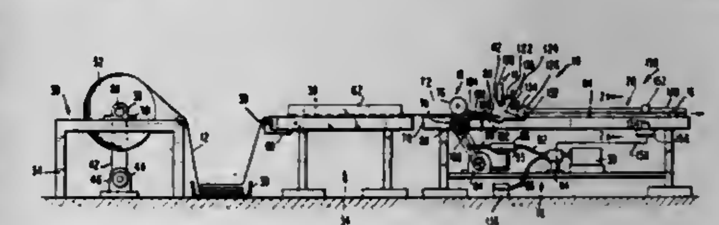

1. A cutting apparatus for cutting a web into sheets comprising:
(a) web shear means,
(b) web stop means disposed downstream of said shear means,
(c) web feed means disposed upstream of said web shear means,
(d) web stiffening means disposed between said web shear means and said web stop means for holding the web in a rigid flat plane whereby the web is accurately cut to a desired length, wherein said web stiffening means includes a flat bottom stiffening surface for supporting the web and a flat top surface disposed above said bottom stiffening surface to hold the web flat as it slides between the bottom and top surfaces, and hinge plate means disposed downstream of and adjacent said web shear means for clamping the web against said flat bottom surface and for preventing any movement of the web downstream of the shear means during the cutting of the web.

4,301,701
ROTARY PUNCH HAVING A HELICALLY CLAMPED ABUTMENT
Siegfried Fuchs, Neuwied, Fed. Rep. of Germany, assignor to Winkler & Dunnebier Maschinenfabrik und Eisengiesserei GmbH & Co. KG, Neuwied, Fed. Rep. of Germany
Filed Feb. 7, 1980, Ser. No. 119,266
Claims priority, application Fed. Rep. of Germany, Feb. 8, 1979, 2904698
Int. Cl.³ B26D *1/02, 1/62*
U.S. Cl. 83—349 5 Claims

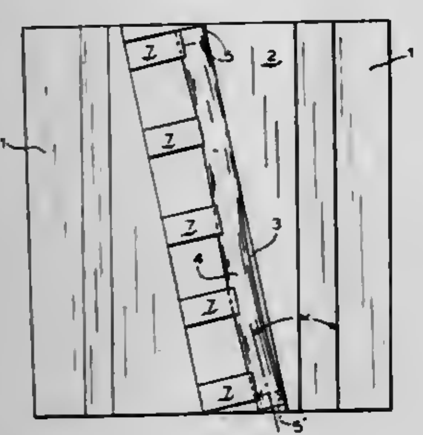

1. In a rotary punch for the production of pre-shaped outer and inner cuts on moving webs or individual blanks of paper or the like, which includes rotating cutting tools having cutting edges which delineate an envelope cylinder and a stationary abutment against which said cutting edges impinge at the instant of cutting and which has an operative cutting ledge which is aligned at a slight inclination to the axis of rotation of said tools and which abutment is so clamped that said ledge thereof, over the entire length thereof, is at the same radial distance from said axis, the improvement comprising:
a holder for said abutment having a bed formed and molded from a curable liquid; and
said stationary abutment has an elongated, continuous cutting ledge of circular cross-section secured in said liqnid of said bed.

4,301,702
HOT WIRE CAVITY CUTTING APPARATUS
David L. Collier, 255 NW. 95th Ave., Portland, Oreg. 97229
Filed Apr. 24, 1980, Ser. No. 143,320
Int. Cl.³ B26F *3/12*
U.S. Cl. 83—862 11 Claims

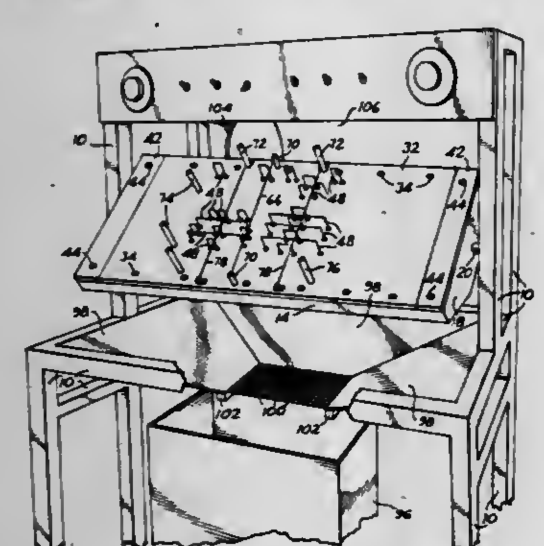

1. Hot wire cutting apparatus for cutting cavities in blocks of packaging material, comprising:
(a) a frame,
(b) a hot wire die support,
(c) a hot wire die projecting outwardly from the die support, and
(d) means mounting the die support on the frame for movement of the die support between an operative position in which the hot wire die projects upward for supporting on the die support a block to be cut, and a discharge position in which the hot wire die projects downward for the gravity release of scrap material remaining on the die support after cutting a cavity in a block.

4,301,703
HIGH NOTE DATA GENERATOR
Stephen L. Howell, Huntingburg, Ind., assignor to Kimball International, Inc., Jasper, Ind.
Filed Apr. 14, 1980, Ser. No. 139,882
Int. Cl.³ G10H *1/22;* H04Q *11/04*
U.S. Cl. 84—1.01 10 Claims

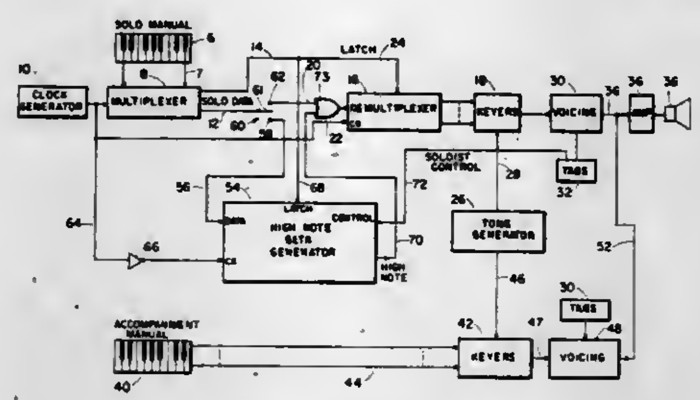

1. An electronic musical instrument comprising:
a keyboard having a plurality of playing keys,
clock means for generating a train of clock pulses,
multiplexer means clocked by said clock means for scanning said keyboard and generating a cyclically recurring time division multiplexed serial data stream comprising a plurality of time slots corresponding to the keys of the keyboard and a series of keydown pulses in respective time slots pertaining to depressed keys of the keyboard,
preferential note data generator means having an input and an output,
means for connecting said data stream to the input of said preferential note data generator means,
said preferential note data generator means detecting the first occurring keydown pulse in said serial data stream and generating a cyclically recurring monophonic serial data stream on its output comprising a plurality of time slots synchronized with and temporally coextensive with the time slots of said first mentioned data stream and a single pulse, said single pulse being completely contained in the time slot of said monophonic data stream corresponding to the time slot of said first occurring keydown pulse,
said first occurring keydown pulse having a leading edge and a trailing edge, and
said preferential note data generator means being responsive only to the leading edge of said first occurring pulse and independent of the trailing edge thereof.

4,301,704
ELECTRONIC MUSICAL INSTRUMENT
Yohei Nagai; Tetsuo Nishimoto, and Shimaji Okamoto, all of Hamamatsu, Japan, assignors to Nippon Gakki Seizo Kabushiki Kaisha, Japan
Filed May 1, 1978, Ser. No. 901,798
Claims priority, application Japan, May 12, 1977, 52-53679; May 12, 1977, 52-53680
Int. Cl.³ G10H *1/057;* G01H *1/14*
U.S. Cl. 84—1.22 2 Claims

1. An electronic musical instrument, comprising:
tone color selecting means for selecting a tone color and for generating an output signal representative of the selected tone color;
keyboard information generating means for generating key information signals respectively indicating depressed keys and designating musical notes to be produced;
a plurality of independent parameter signal generating means each responsive to the key information signals for generating a set of parameter signals representative of a multiplicity of parameters, the parameters represented by the parameter signals from one parameter signal generating means being independent of and different from the parameters represented by the parameter signals from another parameter signal generating means;
a plurality of musical tone signal generating means each corresponding to a respective parameter signal generating means and each responsive to the parameter signals from its corresponding parameter signal generating means and the key information signals for generating a musical tone signal according to the fundamental equation

$$e = KT_d(t)A(t)\sin\{B\omega t + T_f(t)I(t)\sin(D\omega t)\},$$

wherein;
ωt is an independent variable of the equation determined in accordance with the key information, and representing a reference tone pitch of a depressed key and timewisely progressing in value at a rate corresponding to the key information signal,

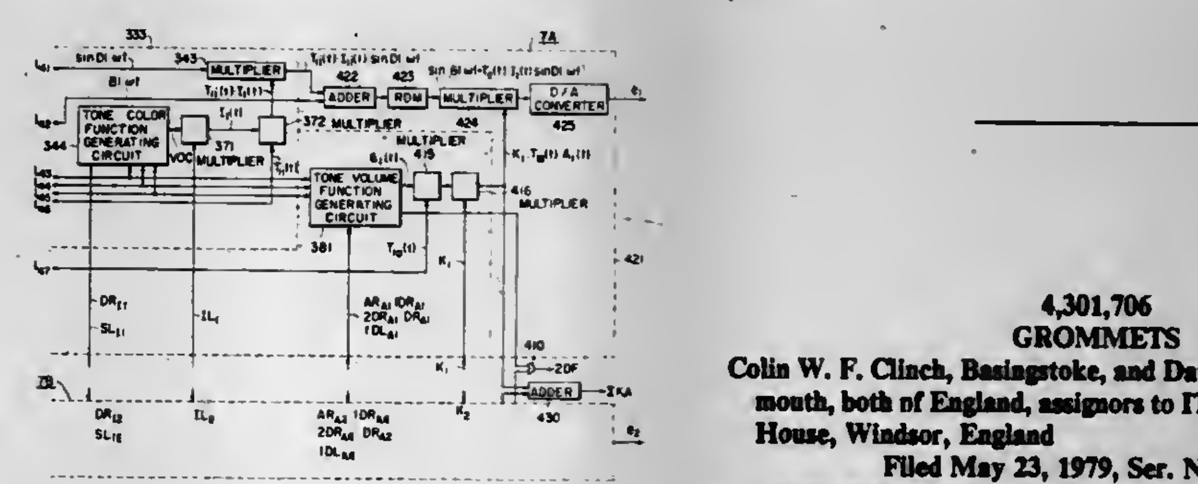

K is a tone volume constant determined in accordance with the tone color selected by said tone color selecting means, and determinative of a relative volume among different musical tone signals,
$T_d(t)$ is a tone volume selecting variable determined in accordance with the manner of depression of the depressed keys, and determinative of volume,
A(t) is a variable determined in accordance with the tone color selected by said tone color selecting means, and determinative of a tone waveform envelope,
B is a tone pitch constant determined in accordance with the tone color selected by said tone color selecting means, and determinative of an amount of variation from a reference tone pitch,
$T_f(t)$ is a tone color selecting variable determined in accordance with the manner of depression of the depressed key, and determinative of a tone color,
I(t) is a tone color variable determined in accordance with the tone color selected by said tone color selecting means, and determinative of a timewise variation of a tone color,
D is a partial tone constant determined in accordance with the tone color selected by said tone color selecting means, and determinative of a distribution of partial tone components with respect to said reference tone pitch, and at least K, A(t) I(t) and D have significant values other than unity; and
musical tone generating means for combining the musical tone signals to generate musical tones according to the combination of musical tone signals.

4,301,705
CAPODASTROS
Terence Gould, The Old Crown, Bugbrooke, Northampton, England
Filed Apr. 11, 1980, Ser. No. 122,997
Claims priority, application United Kingdom, Mar. 2, 1979, 07367/79
Int. Cl.³ G10D *3/04*
U.S. Cl. 84—318 1 Claim

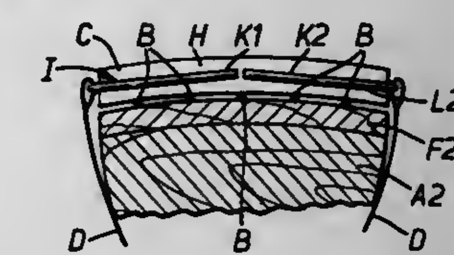

1. A capodastro for stringed musical instruments having a pressure bar which is adapted to be effective on both flat fingerboards and on transversely convex fingerboards, which bar has a flexible pressure pad located within a hollow frame of wire or other convenient material, of which frame one opposite pair of generally parallel sides consists of one side which is straight and continuous and of another side which is discontinuous.

4,301,706
GROMMETS
Colin W. F. Clinch, Basingstoke, and David N. Harley, Bournemouth, both of England, assignors to ITW Limited of Darville House, Windsor, England
Filed May 23, 1979, Ser. No. 41,675
Claims priority, application United Kingdom, May 30, 1978, 24663/78
Int. Cl.³ F16B *13/04*
U.S. Cl. 411—57 8 Claims

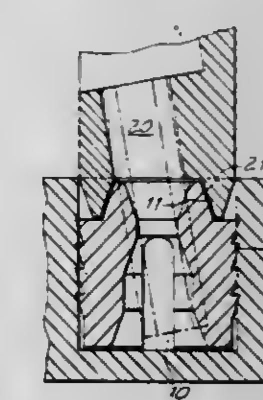

1. A screw grommet comprising a substantially cylindrical shank, the exterior surface of the shank being formed with axially aligned rows of axially spaced barbs, the rows separated by flutes, and the shank being further formed with a bore having a first cylindrical portion intermediate the length of the grommet, a first tapered portion connecting the first cylindrical portion to a second cylindrical portion of smaller diameter than the first, and a second tapered portion of the bore diverging from the second cylindrical portion and terminating at one end of the grommet.

4,301,707

EMBEDDED EXPLOSIVE SEVERANCE OF NON-METALLIC MATERIALS

Morry L. Schimmel, University City, and Don L. Young, Jr., Florissant, both of Mo., assignors to McDonnell Douglas Corporation, Long Beach, Calif.

Filed Oct. 29, 1979, Ser. No. 88,941

Int. Cl.[3] F42B *1/00;* **B64C** *1/32*

U.S. Cl. 89—1 B **10 Claims**

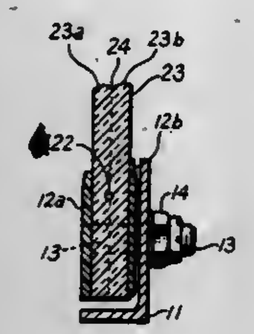

9. An explosive severable structure comprising:
a frame member,
a non-metallic member attached to said frame member,
at least one detonating cord encapsulated within said non-metallic member,
an initiator to explode said detonating cord; and
said detonating cord being sized and positioned to fragment said non-metallic member thereby severing said non-metallic member permitting detachment of said non-metallic from said frame member.

4,301,708

LAUNCH TUBE CLOSURE

Richard A. Mussey, Springfield, Va., assignor to The United States of America as represented by the Secretary of the Navy, Washington, D.C.

Filed Jul. 25, 1979, Ser. No. 60,536

Int. Cl.[3] F41F *3/04*

U.S. Cl. 89—1.810 **10 Claims**

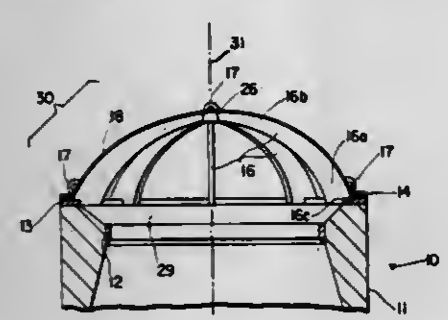

1. A closure for a missile launch tube comprising:
frangible glass means mounted on said launch tube so as to form a dome shaped closure, said frangible glass means comprising:
a plurality of arcuate shaped glass ribs forming a dome shape;
means for joining said glass ribs; and
a plastic cover support by and covering said glass ribs and joining means;
means for securing said frangible glass means to said launch tube; and
explosive means mounted on said dome shaped closure so as to fragment said frangible glass means prior to missile launch.

4,301,709

MECHANICAL ANTI-HANGFIRE SYSTEM

Luis A. Bohorquez, Inglewood; Michael M. Cleary, Pacific Palisades; Charles C. Ash, Los Angeles; Don E. Van Osten, Fountain Valley; Robert B. Pounds, Santa Monica, and John H. Sallach, Sepulveda, all of Calif., assignors to Hughes Helicopters, Inc., Culver City, Calif.

Filed Jun. 8, 1979, Ser. No. 46,664

Int. Cl.[3] F41D *11/00*

U.S. Cl. 89—11 **20 Claims**

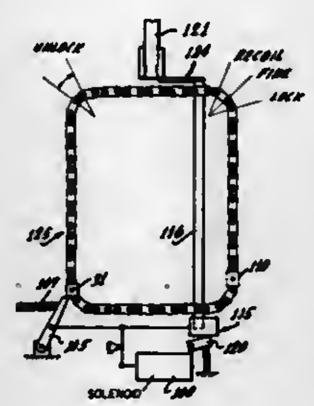

1. In a gun which includes at least a feed mechanism, a gun barrel and a bolt and means to effect relative movement between the bolt and the barrel; and wherein the gun firing cycle includes ramming, locking the bolt, firing, unlocking the bolt, extracting, ejecting and feeding and wherein there is movement in recoil upon firing or a round, the improvement comprising:
chain means normally continuously moving during normal gun firing to effect movement of said bolt relative to said barrel,
means to sense recoil as an indication that a round has fired,
stop means engageable with said chain means to stop movement of said normally continuously moving chain means to thereby stop movement of said bolt, and
means responsive to said sensing means to control movement of said stop means between an engaged position and a disengaged position.

4,301,710

CONTROL FOR GUN BOLTS IN A HIGH RATE OF FIRE REVOLVING BATTERY GUN

Robert G. Kirkpatrick, Shelburne, Vt., assignor to General Electric, Burlington, Vt.

Filed Feb. 4, 1980, Ser. No. 118,028

Int. Cl.[3] F41D *7/02*

U.S. Cl. 89—12 **2 Claims**

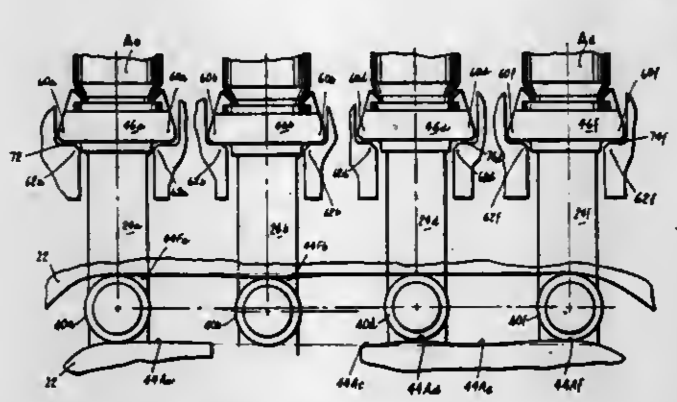

1. A Gatling type gun including:
a housing;
rotor means journaled for rotation in said housing;
said rotor having:
a plurality of gun barrels,
a like plurality of sets of radially projecting locking lugs, and

a like plurality of gun bolts,
each of said gun bolts having:
a gun bolt carriage journaled for reciprocation in said rotor means to, through and between a front dwell position and an aft dwell position, and having:
a first cam follower,
a gun bolt head journaled for oscillation in said carriage to and between a lock and an unlock angular orientation, and having:
a set of radially projecting locking lugs for interlocking with a respective set of said plurality of sets of locking lugs of said rotor means when said head is in its lock orientation and for deinterlocking with said respective set when in its unlock orientation, and
a second cam follower;
said housing having:
a first cam coupled to said first cam follower of each of said gun bolt carriages for driving said carriages in reciprocation, and
a second cam coupled to said second cam follower for driving said head in oscillation,
said first cam and said second cam being so configured and arranged as to provide a mode of operation wherein:
each of said gun bolts with its head in its unlock orientation is driven initially into forward dwell whereat its locking lugs are spaced longitudinally by a gap forward of said locking lugs of said rotor,
thereafter said head is driven into its lock orientation with its locking lugs radially aligned with, but longitudinally spaced from, said locking lugs of said rotor, thereafter, but prior to firing, said head with its head in its lock orientation is driven aftwardly to bring its locking lugs into longitudinal abutment with said locking lugs of said rotor,
subsequently, after firing, said head is driven forwardly to longitudinally space its locking lugs by a gap forward of said locking lugs of said rotor,
thereafter, said head is driven into its unlock orientation whereat its locking lugs are radially disaligned from said locking lugs of said rotor, and
subsequently said bolt is driven out of forward dwell.

4,301,711

FLEXIBLE AMMUNITION CHANNEL

Alfred Vonlanthen, Dübendorf, and Heinz Lienhard, Baar, both of Switzerland, assignors to Werkzeugmaschinenfabrik Oerlikon-Bührle AG, Zürich, Switzerland

Filed Sep. 17, 1979, Ser. No. 76,244

Claims priority, application Switzerland, Sep. 25, 1978, 9970/78

Int. Cl.[3] F41F *9/00*

U.S. Cl. 89—33 BB **7 Claims**

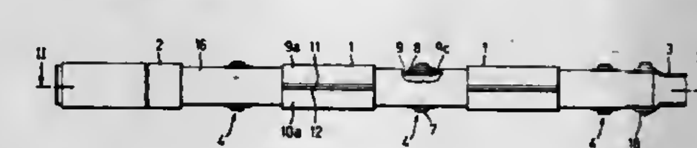

1. A flexible ammunition channel for the infeed of ammunition between a magazine and a weapon, comprising:
a plurality of elements for forming the ammunition channel;
means for hingedly connecting said elements to one another to form a flexible ammunition channel bendable in only one predetermined bending plane;
said means for hingedly connecting said elements to one another having hinge axes directed essentially perpendicular to said one bending plane of the ammunition channel;
flexible guide bands forming side walls of the ammunition channel and directed essentially perpendicular to said one bending plane;
said elements including a first end element at which there are secured said flexible guide bands;
said elements including a second end element provided with recess means; and
said flexible guide bands being guided by said elements and protruding into said recess means of said second end element.

4,301,712

DEVICE FOR CONTROLLING THE DEGREE OF BLOWBACK DELAY IN AUTOMATIC WEAPONS

Salvatore J. Cristina, 3555 Olinville Ave., Bronx, N.Y. 10467

Filed May 7, 1979, Ser. No. 36,405

Int. Cl.[3] F41D *11/06*

U.S. Cl. 89—153 **3 Claims**

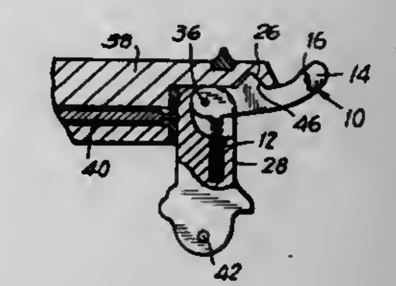

1. In a device for the controlled delay of blowback in automatically operable weapons which include a barrel and which further include first and second parts which are relatively moveable upon firing of the weapon in response to breech pressures to open the weapon breech, the improvements comprising, locking means operatively associated with said relatively moveable parts, said locking means comprising abutting portions which are operable, when in abutment, to prevent relative movement of said first and second parts, said locking means portions being arranged to remain in abutment and delay breech opening until breech pressures have dropped to generally residual levels whereby, premature opening of the weapon breech is prevented, said locking means comprising a wedge operatively associated with the first of said parts, and a complementally shaped notch formed in the second of said parts, said wedge extending into said notch, said locking means portions comprising abutting surfaces of said wedge and notch, respectively, said weapon being an automatically operable pistol having an external hammer, said first and second parts respectively comprising the pistol hammer and the pistol slide.

4,301,713

APPARATUS FOR SUPPLYING FLUID TO A PLURALITY OF MECHANISMS

R. Paul Cobb, Washington, and Marvin L. Schneider, Peoria, both of Ill., assignors to Caterpillar Tractor Co., Peoria, Ill.

Filed Dec. 7, 1978, Ser. No. 967,543

Int. Cl.[3] F01B *31/10*

U.S. Cl. 91—46 **16 Claims**

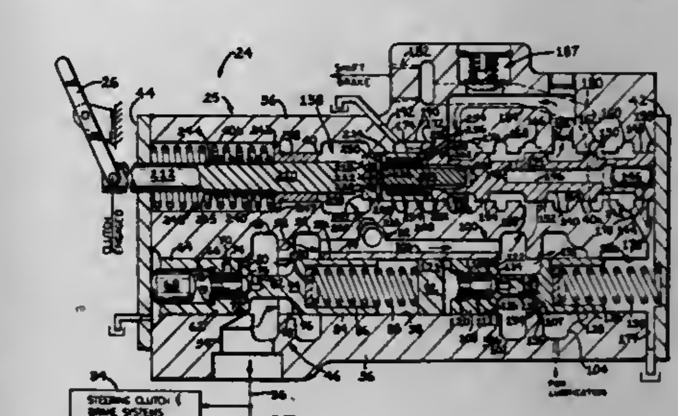

1. Apparatus (24) for supplying pressurized fluid from a fluid

source to first (16), second (30) and third (34) controlled members responsive to fluid pressure, comprising:

(a) valve means (25) for controlling the supply of pressurized fluid from the source to the first (16), the second (30) and the third (34) controlled members, including
  (i) first means (46) for relieving pressurized fluid supplied to the third (34) controlled member, and
  (ii) means (50, 99, 102, 106, 138) for directing pressurized fluid relieved by said first relieving means (46) to the first (16) and the second (30) controlled members, including means (138) for modulating the pressurized fluid directed to the first (16) controlled member, said modulating means (138) including
    (1) piston means (140) for controlling the flow of pressurized fluid to the first (16) controlled member, said piston means (140) being movable to a plurality of positions, and
    (2) means (210, 228, 234) for biasing said piston means (140) into one or more of the positions; and
(b) movable lever means (26) for shifting said valve means (25) to supply fluid to the first (16) and the second (30) controlled members.

4,301,714
DAMPING DEVICE IN PRESSURIZED FLUID CYLINDERS
Stig Stenlund, Saltsjöbaden, and Lars Nordgren, Gustavsberg, both of Sweden, assignors to AB Mecman, Stockholm, Sweden
Filed May 24, 1979, Ser. No. 41,994
Int. Cl.³ F15B *15/22*
U.S. Cl. 91—394 4 Claims

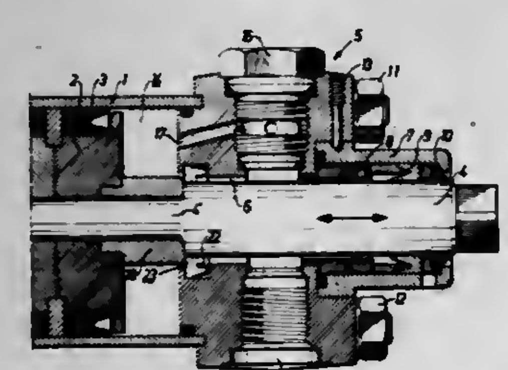

1. In a hydraulic cylinder having a reciprocable piston, an arrangement for end position damping of the piston stroke, comprising a closure member connected to the piston and adapted to enter, during a damping process, into an outlet opening in front of the piston, and a ring serving as a non-return valve and arranged in an annular groove in a wall defining the outlet opening so as to prevent the flow of hydraulic liquid through an annular passage between the wall defining the outlet opening and the closure member during entry of said closure member into said outlet opening, while permitting a hydraulic liquid flow in the opposite direction during the return stroke of the piston, said groove having two axially spaced side walls, and said ring being made in one piece and having a substantially C-shaped cross-section so as to permit a resilient radial deformation, the radially inner portion of said ring being undivided circumferentially and the radially outer portion of said ring being provided with circumferentially distributed by-pass openings, and said ring being axially movable in said groove, whereby during the damping process an intermediate portion of said ring is in contact with one of said side walls to prevent the flow of hydraulic liquid through said passage and the radially outer portion of the ring is in contact with the other of said side walls during the return stroke of the piston so as to permit said hydraulic liquid flow substantially axially in said annular passage and said groove.

4,301,715
4-WAY, 2-POSITION PILOT VALVE
Ali Acar, Los Angeles, Calif., assignor to International Telephone and Telegraph Corporation, New York, N.Y.
Filed Dec. 26, 1979, Ser. No. 107,384
Int. Cl.³ F15B *13/044*
U.S. Cl. 91—457 2 Claims

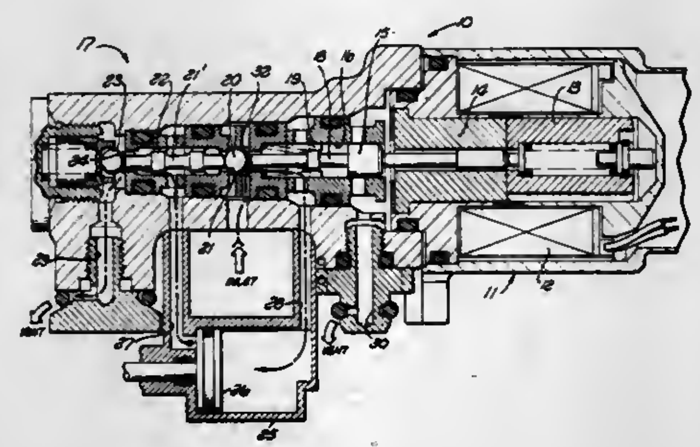

1. A 4-way, 2-position pilot valve, said valve comprising: a housing, first and second exhaust passages in said housing; a cylinder; a main piston slidable in said cylinder; first and second cylinder ports in communication with said cylinder on opposite sides of said main piston, respectively; an inlet port in said housing; first, second and third annular valve seats in said housing; a first valve stem slidable in said housing; first and second ball valves movably supported in said housing; a first spring supported in said housing in a manner to bias said first ball valve against said first seat, reciprocation of said first valve stem in one direction causing said first ball valve to be pushed off of said first seat, said first valve stem being located between said first and second ball valves, said first valve stem having a length less than the distance between said first and second ball valves when said first and second ball valves engage said first and third valve seats, respectively, said inlet port being in communication with said second ball valve to enter through one of said second and third valve seats, the pressure in said inlet port causing said second ball valve, when in one position to seal against said third seat; a second valve stem including a cylindrical pilot piston fixed therewith slidable in said housing, said housing having a cylindrical portion with a cylindrical wall and a hole through said wall, said hole being vented externally of said housing, said pilot piston being slideable contiguously within said cylindrical wall in one direction to open said hole to the interior of said housing cylindrical portion, and slidable in the opposite direction, said pilot piston, when in one position, sealing said hole shut, said pilot piston having means connected therewith to push said second ball valve from said one position in engagement with said third seat to another position in engagement with said second seat, said first ball valve being pushed to a position spaced from said first seat by engagement of said second ball valve with said first valve stem and by engagement of said first valve stem with said first ball valve; a spring to bias said second valve stem out of engagement with said second ball valve when said second ball valve engages said third seat; and selectively operable reciprocatory means to move said second valve stem to an extent to cause said hole to be sealed and to cause said second ball valve to engage said second valve seat.

4,301,716
REFRIGERANT COMPRESSOR UNITS
Nobuaki Saegusa, and Kiyoshi Terauchi, both of Isesaki, Japan, assignors to Sankyo Electric Company Limited, Isesaki, Japan
Filed Jun. 21, 1979, Ser. No. 50,542
Claims priority, application Japan, Jul. 1, 1978, 53-89949[U]
Int. Cl.³ F04B *1/18;* F01B *3/02*
U.S. Cl. 92—71 2 Claims

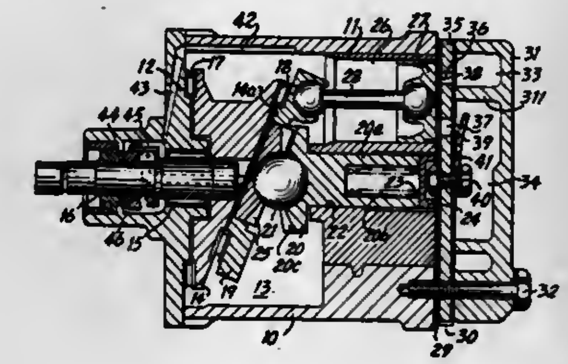

1. In a refrigerant compressor unit comprising a cylinder block having a plurality of equiangularly spaced cylinders, a plurality of pistons slidably and closely fitted into respective ones of said cylinders, a drive shaft, a cam rotor mounted on an end of said drive shaft having an inclined end surface, a wobble plate disposed in proximity with said inclined end surface and having a centered first bevel gear which is provided with a centered ball seat, a second bevel gear supported on said cylinder block and having a centered ball seat, a ball bearing seated in both of said ball seats and supporting said wobble plate so as to be able to nutate about the center of said ball, piston rods connecting respective said pistons to said wobble plate, the improvement comprising said wobble plate including a ring member having a counterbore and said first bevel gear member, said first bevel gear member being fitted into said counterbore and secured to said ring member by mechanically deforming the peripheral edge of the counterbore to prevent relative rotation and axial movement of said ring member with respect to said bevel gear member.

4,301,717
COOKING UTENSILS
Hans Knees, via Queanbeyan, Burbong, New South Wales, Australia (2620)
Filed Jul. 6, 1979, Ser. No. 55,694
Claims priority, application Australia, Jul. 12, 1978, PD5042
Int. Cl.³ A47J *27/00;* B01F *9/02*
U.S. Cl. 99—348 6 Claims

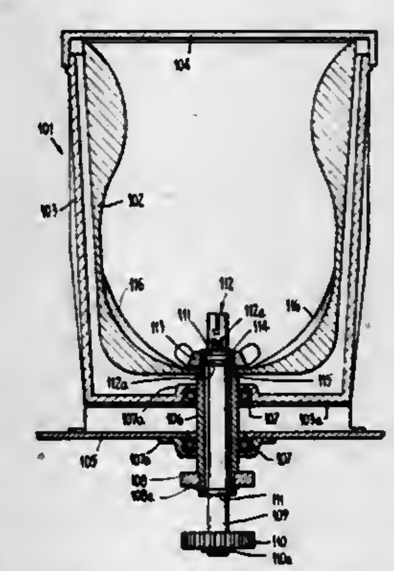

1. A cooking utensil comprising a container for ingredients to be cooked, said container including a base, side walls, and an open top for entering and removing said ingredients; a vessel having a base and side walls enclosing the base and side walls of said container, said vessel including heating apparatus for said container; a shaft attached to the base of said container and protruding downwardly therefrom through said vessel, said container freely supported and rotatable within said vessel by means of said shaft, a mounting frame for supporting said vessel, a pair of bearings respectively mounted in the base of said vessel and on the mounting frame for rotatably holding said shaft in the mounting frame, a drive apparatus connected to rotate said shaft, and thereby to rotate said container about the axis thereof, said mounting frame being pivotable about a horizontal axis enabling said vessel and container to occupy an upright position suitable for entering ingredients into said container, a tipping position for expelling said ingredients, and selected intermediate inclined positions for stir-cooking, the mounting frame including a locking device for locking the mounting frame in one of said positions, and a variable speed control for said drive apparatus whereby when said vessel and container are in an inclined position, the speed of rotation of said container can be selected for various mixtures of ingredients to be cooked whereby stirring but not centrifuging thereof will take place.

4,301,718
ROTARY RETORT
Nathan Lewinger, Rochester, N.Y., and Santi R. Bhowmik, Highland Park, N.J., assignors to Pennant Products, Inc., Rochester, N.Y.
Filed Oct. 25, 1979, Ser. No. 87,975
Int. Cl.³ A23L *3/10*
U.S. Cl. 99—359 7 Claims

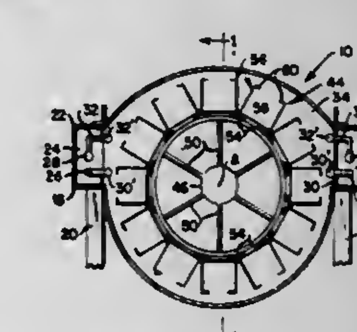

1. Apparatus for processing food products in sealed containers, said apparatus comprising:

a vessel including a substantially cylindrical shell and a pair of heads respectively closing the ends to said shell;
support means for carrying the sealed containers, said support means including at least one U-shaped channel member rotatably mounted within said shell parallel to the longitudinal axis of said shell, said channel member defining a plurality of openings through the walls thereof comprising a substantial portion of the surface area of such walls, and integral lips located on the upstanding walls of said channel such that a plurality of sealed food product containers, received in said channel, are retained in said channel by said lips and are in flow communication with the interior of said vessel;
means for rotating said support means within said vessel; and
means for selectively heating and cooling the interior of said vessel, and accordingly the sealed containers, as said support means is rotated to accomplish complete processing of the food products within the sealed containers.

4,301,719
SEPARATING CITRUS PEEL INTO ALBEDO AND FLAVEDO COMPONENTS
Gordon P. Gerow, Davenport, Fla., assignor to FMC Corporation, San Jose, Calif.
Division of Ser. No. 953,513, Oct. 23, 1978, Pat. No. 4,225,625. This application May 19, 1980, Ser. No. 151,223
Int. Cl.³ A23N *1/02*
U.S. Cl. 99—510 **4 Claims**

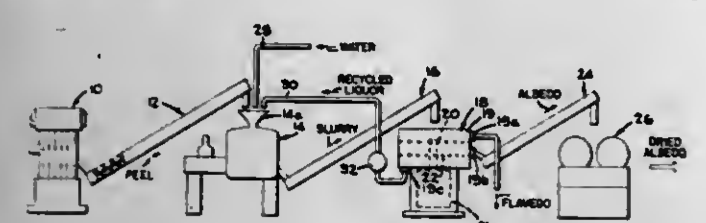

1. In combination with a juice extractor which separates the peels of citrus fruits, said peels including both the albedo and flavedo of the fruits, from the remainder of the fruits, an apparatus for separating a substantially pure albedo fraction from the peels discharged from the extractor comprising: means for comminuting the peels, including both the albedo and flavedo portions, into finely divided particles to the extent that the entire peel is comminuted into a mass of particles wherein the particles comprised of substantially pure albedo are more finely divided relative to the larger particles which contain a significant proportion of flavedo; means for conveying peels discharged from the extractor to said comminuting means; means for separating said smaller particle size albedo fraction from the relatively larger peel particles discharged from said comminuting means to thereby provide an albedo fraction; and means for conveying the comminuted peel particles discharged from said comminuting means to said separating means.

4,301,720
MACHINE FOR TYING COILS OF METAL WIRE
Hubert Elineau, Versailles, France, assignor to Arbed Societe Anonyme, Luxembourg, Luxembourg
Filed Feb. 7, 1980, Ser. No. 120,081
Claims priority, application Luxembourg, Feb. 22, 1979, 4535
Int. Cl.³ B65B *13/28*
U.S. Cl. 100—12 **18 Claims**

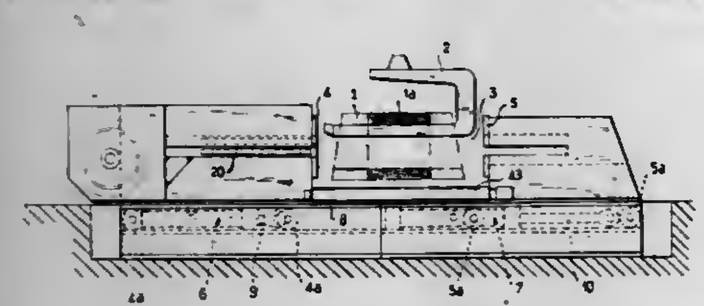

1. A machine for tying coils of wire by at least one tie, comprising a substantially flat support having at least one elongated cutout having an open and a closed end; a tie guide defining a path around said cutout; means for displacing said support and said coil relative to each other to place a portion of said coil into said cutout with an end face of said coil adjacent said closed end of said cutout; means for fixing one end of a tie at a point located between said closed end of said cutout and the adjacent end face of the coil; means on said tie guide for gripping the tie at a point adjacent said fixed point; means for driving said gripped point along said path defined by said tie guide to thereby wind the tie about the portion of the coil; means for cutting the tie at a point located between the end face of the coil and the gripped point; and means for twisting the one end of the tie with the cut end.

4,301,721
ROLL-JOURNAL BEARING MOUNTING
Karl-Heinz Liessen, Krefeld, and Erwin Janssen, Kempen, both of Fed. Rep. of Germany, assignors to Eduard Küsters, Krefeld, Fed. Rep. of Germany
Filed Apr. 21, 1980, Ser. No. 141,807
Int. Cl.³ B30B *3/04;* F16C *7/04, 35/00*
U.S. Cl. 100—170 **10 Claims**

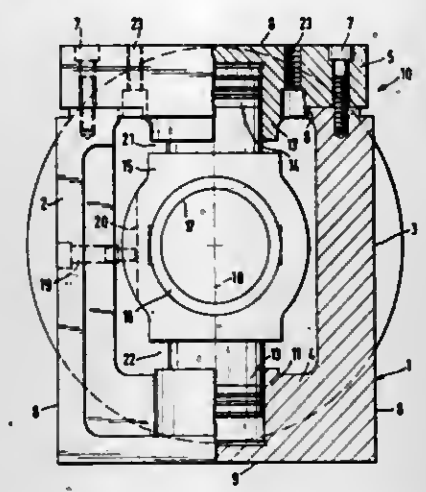

1. A roll-journal bearing mounting comprising cylinders having interfacing and interspaced open ends, holding means for holding said cylinders against displacement, a movable bearing housing spaced between said ends, and pistons rigidly connected to said housing so as to extend therefrom respectively in opposite directions and into said open ends of the cylinders, the ends of said cylinders opposite to their said open ends being closed so that pressurized fluid can be fed into the cylinders behind said pistons so as to cause movement of the housing and pistons either way in the directions said pistons extend from said housing in said cylinders.

4,301,722
CAN CRUSHER
Constantino J. Balbo, 116 France St.; Leonard F. Bruhn, and Clements E. Bruhn, both of P.O. Box 153, all of Sonoma, Calif. 95476
Filed Oct. 20, 1980, Ser. No. 198,522
Int. Cl.³ B30B *15/32*
U.S. Cl. 100—218 **14 Claims**

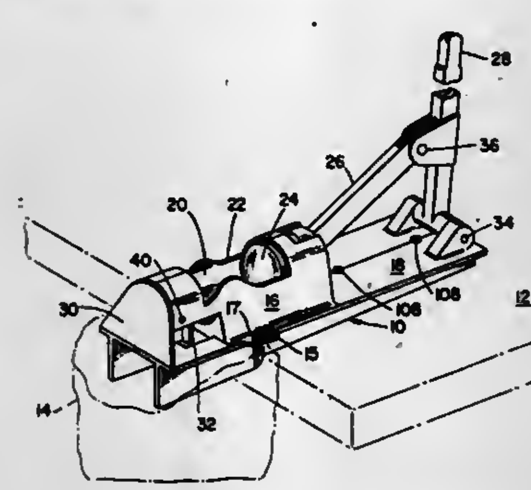

1. A device for crushing and compressing a thin walled, generally cylindrical container comprising:
elongated base means having bearing means near one end thereof;
housing means fixed to said base means having a side opening for receiving a can to be crushed, and end opening and a generally cylindrical cavity with an inner diameter somewhat larger than a container to be crushed;
an actuating lever pivotally attached at one end to said bearing means on said base means;

a movable piston within said housing and attached to a piston rod extending at least partially through said end opening of said housing, the end of said piston rod being pivotally attached to said actuating lever;
an anvil means pivotally mounted within said housing at its end opposite from said open end;
and means in said base means adjacent said anvil means forming an exit opening for a crushed can, whereby said anvil means remains substantially perpendicular to the central axis of said cylindrical cavity as crushing pressure is applied by the piston and moves from said perpendicular position when the piston is retracted, thereby releasing the crushed can.

4,301,723
CYLINDER OPERATED SWINGING RAM CUTOFF PRESS
John J. Borzym, 4820 School Bell La., Birmingham, Mich. 48010
Continuation-in-part of Ser. No. 799,204, May 23, 1977, abandoned. This application Apr. 1, 1980, Ser. No. 136,200
Int. Cl.³ B26D *7/26;* B23D *25/06*
U.S. Cl. 100—271 **13 Claims**

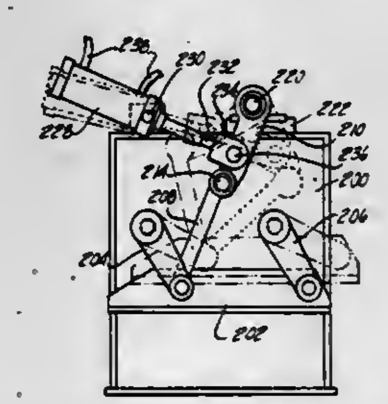

1. A swinging ram apparatus, comprising:
a base;
a ram;
means for mounting said ram on said base for swinging movement through an arcuate path between a stand-by position and an operated position, said mounting means including linkage pivotally connecting said ram to said base; and
drive means for causing said ram to complete successive swing cycles through said arcuate path, each of said cycles including a working stroke in which said ram swings from said stand-by position thereof to said operated position thereof and a return stroke in which said ram swings from said operated position thereof to said stand-by position thereof,
said drive means including double action, fluid operated motor means for causing said ram to swing, said motor means being mounted on said base and adapted to be operably coupled with a source of pressurized fluid, said motor means having a force transmitting reciprocable output shaft shiftable in one direction for causing said ram to complete a first swing cycle thereof and shiftable in the opposite direction for causing said ram to complete a second swing cycle thereof, the magnitude of force transmitted by said output shaft when the latter shifts in said one direction thereof being greater than the magnitude of force transmitted thereby upon shifting thereof in said opposite direction,
said drive means further including means connecting said output shaft with said ram for increasing the magnitude of force transmitted from said output shaft to said ram during the working stroke of said second swing cycle, whereby said drive means transmits essentially magnitudes of force to said ram during each working stroke thereof.

4,301,724
PLANE PRINTING MACHINE
Tsunehiko Okura, Konan, Japan, assignor to Ishizuka Glass Co., Ltd., Nagoya, Japan
Filed Dec. 10, 1979, Ser. No. 102,132
Int. Cl.³ B41F *17/24*
U.S. Cl. 101—35 **10 Claims**

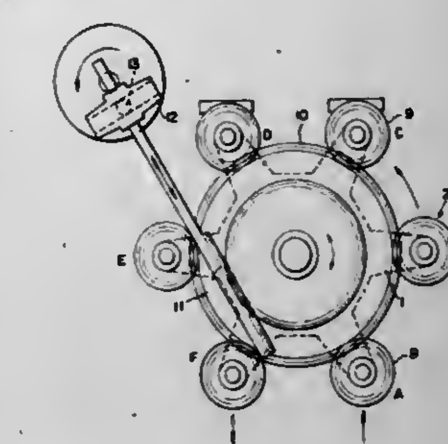

1. A plane printing machine comprising;
a table rotatable intermittently in one direction;
a plurality of printed object holders each rotatable on its own axis, installed around said table at equal distances from the center of rotation of said table;
planet gears installed coaxially with respective printed object holders;
a sun gear having its center of rotation aligned with the center of rotation of said table, and rotatable alternately in normal and reverse directions, said sun gear all the time meshing with each planet gear;
a means to prevent the reverse rotation of said sun gear from being transmitted to said printed object holder;
and a means to execute plane printing on an object to be printed being held at rest by the action of the reverse rotation preventing means.

4,301,725
PRINTING APPARATUS WITH ABRASION RESTRAINER
Toshio Hiki, and Koichi Saga, both of Katsuta, Japan, assignors to Hitachi Koki Company, Limited, Tokyo, Japan
Filed Jul. 13, 1979, Ser. No. 57,493
Claims priority, application Japan, Jul. 14, 1978, 53-86422
Int. Cl.³ B41J *1/20*
U.S. Cl. 101—93.14 **6 Claims**

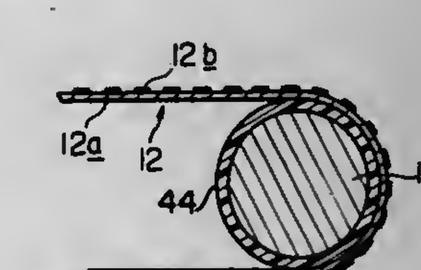

1. A printing apparatus comprising:
(a) a rotatably mounted drive pulley;
(b) means for rotating said drive pulley;
(c) a rotatably mounted idler pulley;
(d) an endless type carrier belt constructed of a thin metallic plate, said endless type carrier belt being engaged with both said drive pulley and said idler pulley to move around said two pulleys, said endless type carrier belt being partially wrapped around both said drive pulley and said idler pulley and in tension between said pulleys;
(e) hammer means placed at one side of said endless type

carrier belt for striking a printing sheet against faces of selected types carried by said endless type carrier belt;
(f) a platen placed at an opposite side of said endless type carrier belt; and
(g) lubricating means disposed around the periphery of at least one of said drive pulley and said idler pulley in such a manner that said lubricating means rotates with the corresponding pulley, said lubricating means having an elastomeric sheet containing a lubricant;
(h) said elastomeric sheet being interposed between said at least one of said drive pulley and said idler pulley and said carrier belt, whereby pressure of said belt on said elastomeric sheet dispenses said lubricant onto said carrier belt during rotation of said pulleys, to minimize friction between said belt and said platen.

4,301,726
METHOD OF MARKING HOT MATERIAL
Akimune Sato, and Tsuyoshi Tsuchida, both of Okayama, Japan, assignors to Kawasaki Steel Corporation, Kobe, Japan
Division of Ser. No. 924,691, Jul. 14, 1978, Pat. No. 4,253,393. This application Jul. 23, 1979, Ser. No. 59,641
Claims priority, application Japan, Mar. 13, 1978, 53-29097; Mar. 22, 1978, 53-37109
Int. Cl.³ B41M *1/12*
U.S. Cl. 101—129 6 Claims

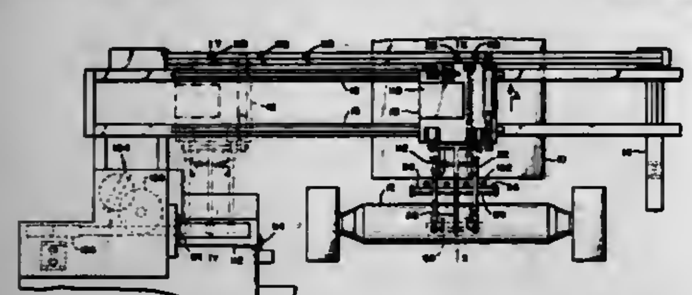

1. A method of marking a hot material which is determined to be at a substantially high temperature, comprising the following steps in a marking sequence.
providing a stencil composed entirely of a readily incineratable material which is combustible at a temperature which is lower than the temperature of said hot material; providing said stencil with apertures representing identifying indicia for the subsequent purpose of stenciling the identifying indicia on a surface of said hot material; holding the stencil with stencil holders at a predeterminedd distance from said surface;
spraying immediately thereafter a coating composition onto the hot material from behind and through the apertures in the stencil so as to transfer the indicia to said surface of said hot material;
positioning said stencil sufficiently close to said hot material to cause the stencil material to heat-up to a temperature higher than its combustible temperature; and
completely incinerating said stencil upon sufficient exposure to the heat from said hot material for each marking sequence which is performed.

4,301,727
METAL PLATED PLASTIC BASE INTAGLIO PRINTING CYLINDERS & PLATES AND METHOD OF MANUFACTURE
Karl D. Bardin, 3754 Marianna Rd., Jacksonville, Fla. 32223
Continuation-in-part of Ser. No. 846,105, Oct. 27, 1977, Pat. No. 4,197,798, which is a continuation-in-part of Ser. No. 620,550, Oct. 8, 1975, abandoned. This application Dec. 31, 1979, Ser. No. 108,454
Int. Cl.³ B41M *1/10*
U.S. Cl. 101—170 19 Claims

10. A process for manufacturing gravure printing apparatus comprising the steps of:
A. forming a supporting plastic base of substantially solid, rigid, compression resistant, homogeneous and stress free material of uniform thickness;

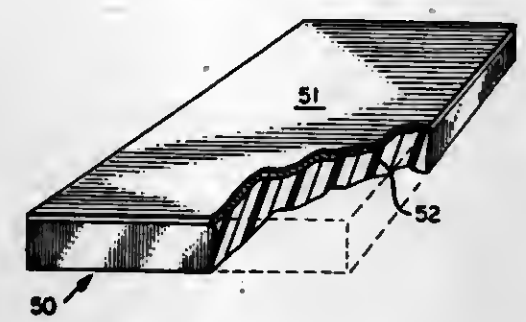

B. affixing an etchable metal layer of uniform thickness to at least one surface of said plastic base; and
C. transferring the desired gravure image into said metal.

4,301,728
ROTARY PRINTING PRESS WITH A BUMPING MECHANISM
Erwin Jaffe; Harshad Matalia; William D. Rinehart; Frederick L. Warner, all of Easton, Pa.; Menashe Navi, New York, N.Y., and George Merker, Fair Lawn, N.J., assignors to American Newspaper Publishers Association, Easton, Pa.
Filed Feb. 11, 1980, Ser. No. 120,584
The portion of the term of this patent subsequent to Sep. 22, 1998, has been disclaimed.
Int. Cl.³ B41F *5/08, 5/24, 13/28, 13/40*
U.S. Cl. 101—220 3 Claims

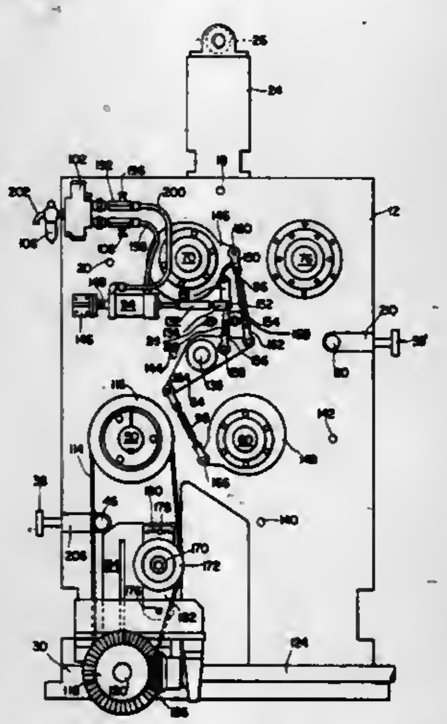

1. A rotary printing press of the type wherein the web is advanced through a superposed first series and second series of rotatably driven inking cylinder, plate cylinder and impression cylinder components comprising:
A. A frame including first and second side plates rigidized with respect to each other;
B. Said first series and second series, each including:
i. an inking cylinder rotatably mounted between said side plates;
ii. a plate cylinder rotatably mounted between said side plates in juxtaposition with said inking cylinder and operatively connected to a rotatable drive; and
iii. an impression cylinder rotatably mounted upon an impression cylinder shaft extending between said side plates, each end of said impression cylinder shaft being fitted within an eccentric bushing, said impression cylinder being engagable with a web being advanced intermediate said plate cylinder and said impression cylinder; said first series plate cylinder being mounted upon a plate cylinder shaft extending between said side plates and including a press rotary drive mechanism, engaging said plate cylinder shaft at one end in said first side plate and a spur gear supported upon said plate cylinder shaft at its other end in said second side plate, so as to be engagable with a corresponding spur gear mounted upon the impression cylinder shaft and in said second side plate; and
C. A flexible timing belt extending from said press rotary drive mechanism to said first series plate cylinder shaft and an adjustable pulley member engagable with said timing belt; and
D. A bumping mechanism engagable with said impression cylinder shaft eccentric bushing in said first series and said second series and further including:
i. a bell crank pivoted to each of said side plates and mounted upon a bell crank shaft extending between said side plates;
ii. vertically adjustable follower struts extending from each said bell crank to said impression cylinder eccentric bushings on both said side plates, each follower strut being adjustably extensible to a pivotal connection with each said impression cylinder eccentric bushing;
iii. pivot means secured to said first side plate and pivotally engaging said bell crank, so as to pivot said bell crank and said eccentric bushings and, thereby, "bump" said impression cylinder shafts with respect to said plate cylinders, said pivot means further including:
(a) a vertically adjustable actuated link pivoted upon said first side plate at one end and pivotally engaging said bell crank at its other end, a midportion of said link engaged by said pivot means, so as to pivot said articulated link and said bell cranks into a bumping mode; and
(b) a longitudinally adjustable drive piston mounted upon said first side plate and having a longitudinally extensible shaft engaging said link, so as to pivot said bell cranks into a bumping mode.

4,301,729
MANUALLY-OPERATED LABELER
Mituo Fujita, Sakatoshi, Japan, assignor to Kabushiki Kaisha Shinsei Industries, Tokyo, Japan
Continuation of Ser. No. 942,380, Sep. 14, 1978, abandoned. This application Jun. 23, 1980, Ser. No. 161,912
Claims priority, application Japan, Sep. 19, 1977, 52/111607; Nov. 9, 1977, 52/135122; May 24, 1978, 53/69932[U]
Int. Cl.³ B65C *11/02*
U.S. Cl. 101—291 14 Claims

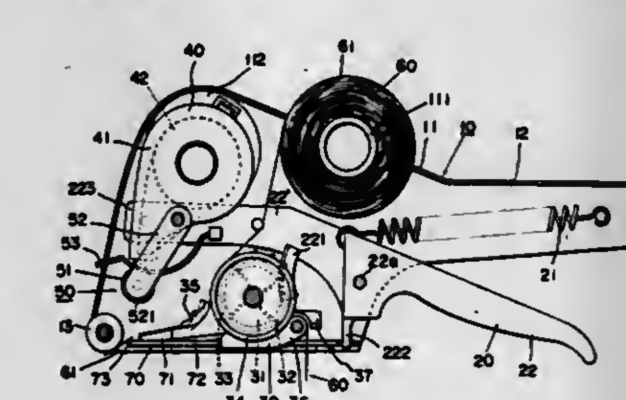

2. A labeler comprising:
a case having a carrier strip holder for holding a roll of carrier strip onto which a number of labels are stuck;
an actuating mechanism having an operating part extending into the case and pivotally mounted on said case and pivotable for movement within said case;
a carrier strip feeding mechanism housed in said case and engaging the carrier strip from the roll and driven by said operating part during movement thereof for feeding a fixed length of carrier strip when said carrier strip feeding mechanism is driven by said operating part;
a printing apparatus having printing means thereon and having one side mounted on said operating part in said case and movable toward and into engagement with said turnback member by said operating part when said operating part is moved for engagement of said printing means with said turnback member to print a label which is carried on the carrier strip extending over said turnback member, said printing apparatus further comprising an ink applying device having a swing lever pivotally mounted on the case, an ink roller on the free end of said swing lever and movable across the printing means during the movement of said printing apparatus toward and away from said turnback member for applying ink to the printing means, said roller having an engaging groove around one end thereof, and a resilient guide member on said case resiliently engaged in said groove and curved along the path of movement of said roller on the end of said swing lever for holding said roller on said swing lever during movement of the swing lever and resiliently distortable out of said groove for freeing the ink roller from said swing lever for removal therefrom.
7. A labeler comprising:
a case having a carrier strip holder for holding a roll of carrier strip onto which a number of labels are stuck;
an actuating mechanism having an operating part extending into the case and pivotally mounted on said case and pivotable for movement within said case;
a carrier strip feeding mechanism housed in said case and engaging the carrier strip from the roll and driven by said operating part during movement thereof for feeding a fixed length of carrier strip when said carrier strip feeding mechanism is driven by said operating part;
a carrier strip turnback member in said case around the edge of which member the carrier strip is turned by the feeding action of said feeding mechanism for separating a label stuck on said carrier strip; and
a printing apparatus having printing means thereon and having one side mounted on said operating part in said case and movable toward and into engagement with said turnback member by said operating part when said operating part is moved for engagement of said printing means with said turnback member to print a label which is carried on the carrier strip extending over said turnback member, said printing means having printing parts with faces for engagement with a label on said carrier strip extending over said turnback member, and said printing apparatus further having a holding frame having a frame plate on said one side thereof, a coupling part on said frame plate and a further coupling part on said operating part, and a fulcrum means by which said firstmentioned coupling part is engaged on said further coupling part, whereby said printing apparatus is mounted on said operating part for rocking movement for enabling adjustment of said printing means to the plane of the turnback member when said printing means is engaged with said turnback member for providing clear impressions by said printing means on the label.

4,301,730
ANILOX ROLL AND METHOD OF MAKING THE SAME
Charles R. Heurich, Hanover, and Walter A. Runck, Holmdel, both of N.J., assignors to Pamarco Incorporated, Roselle, N.J.
Filed Sep. 29, 1977, Ser. No. 838,006
Int. Cl.³ B41F *31/00*
U.S. Cl. 101—348 5 Claims

1. As a new article of manufacture, a wear and corrosion resistant anilox metering roll for the application of ink and like fluids, such roll including isolated peripheral dispensing cells of predetermined capacity and configuration, said roll comprising a cylindrical metallic core having formed in its periphery a multiplicity of depressed, regularly spaced receiver cells,

in cell concentrations of from about 150 to 550 cells per lineal inch, said cells being separated at said periphery by land portions defined by the outermost extremity of said cells, said cells being of a general form of inverted pyramids, a ceramic thermal spray coating formed over said periphery, said coating being in the thickness range of about 0.0015" or less, said

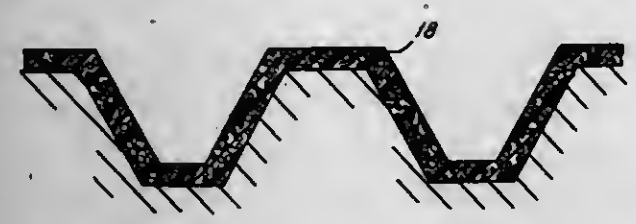

coating being formed from thermally applied ceramic particles of an average size range of 5 microns or less, said coating defining a series of metering cells whose volume is about 60% or more of the volume of the receiver cells, said coating being porous and incorporating interstices of capillary size, said interstices being filled with a polymeric sealer material.

4,301,731
AIR SHOOTING SYSTEM FOR THE MINING OF COAL OR THE LIKE
John E. Fitzgerald, River Forest, Ill., assignor to Zeto Industries, Inc., Des Plaines, Ill.
Filed Sep. 12, 1979, Ser. No. 74,879
Int. Cl.³ F42D *3/04*
U.S. Cl. 102—330 4 Claims

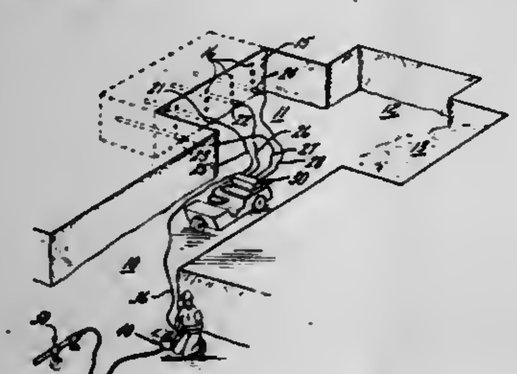

1. In an air shooting system for a set of shot holes in a coal seam or the like, the combination comprising a set of tubular shooting heads dimensioned to fit in the respective shot holes and each having a head inlet at the near end supplied by an individual feed line, a reservoir in the head fed by the inlet, means defining a discharge port adjacent the far end of the head, each shooting head having a valve mechanism interposed between the reservoir and the discharge port for blocking the discharge port as pressure is progressively built up in the reservoir, the valve mechanism including pressure responsive means for suddenly opening the discharge port as the pressure reaches a triggering level to release pressurized air in the shot hole for splitting of the seam, a source of high pressure air, a manifold connected to the source, a set of automatic shut-off valves interposed between the manifold and the individual feed lines, each shut-off valve having an inlet and an outlet and having a movable shut-off valve element interposed between the inlet and outlet for controlling air flow through a restricted air passage, the movable valve element being exposed on opposite sides to the pressures at the inlet and outlet and biased into a normally open position to permit gradual flow of air through the restricted air passage to the outlet but with the differential pressure resulting from the sudden drop in pressure at the outlet, as discharge occurs at the associated shooting head, serving to snap the valve element into closed position cutting off further flow, the valve element being thereafter held in closed position by the pressure at the inlet, the pressure responsive means in the respective shooting heads being adjustable to trigger at incrementally spaced levels in a predetermined series so that, as air pressure is built up simultaneously in the reservoirs of all of the shooting heads, the shooting head lowest in the series is triggered for discharge causing a sudden drop in pressure at the outlet of the associated shut-off valve thereby shutting off further flow of air thereto and isolating such head from the manifold to prevent loss of manifold pressure, with the process being repeated for each successive shooting head in the series until all of the shut-off valves are in closed condition, and means including a manual control and re-set valve interposed between the source and the manifold for cutting off flow of pressurized air from the source to the manifold and venting the manifold to remove pressure at the inlets of the shut-off valves so that the valve elements thereof are restored to normally open position to achieve prompt simultaneous venting of the feed lines preparatory to removal of the shooting heads for re-location in a succeeding set of shot holes.

4,301,732
TRACER BULLET
Norman E. Van Sickle, 6 N. 1st, Council Bluffs, Iowa 51501
Filed Jun. 20, 1979, Ser. No. 50,257
Int. Cl.³ F42B *13/34*
U.S. Cl. 102—430 2 Claims

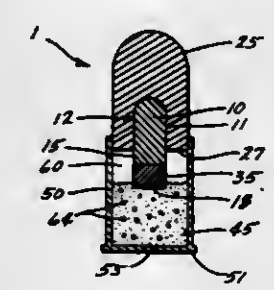

1. In a firearm cartridge having a shell, a charge of powder for a firearm in said shell, and a primer means for detonating said powder; a tracer bullet comprising:
(a) a projectile element secured to said shell, said projectile element having a recessed portion formed into the lower end thereof;
(b) a combustible element having an upper portion which is housed within said recessed portion of said projectile element, and further having a lower cylindrically shaped portion, said lower cylindrical portion including a concentric bore;
(c) a pyrotechnic element, said pyrotechnic element being substantially cylindrical and being housed within said concentric bore, said concentric bore being defined by a cylindrical wall, said cylindrical wall including openings, each of said openings being filled with a corresponding raised portion extending from said substantially cylindrical pyrotechnic element; and
(d) a desiccant deposited within said shell, said shell including an air space and said desiccant absorbing an amount of moisture from said air space so that said moisture does not combine with oxygen in said air space; wherein said powder is ignitable by said primer means to cause an explosion, said explosion causing the discharge of said projectile from said shell and substantially simultaneously causing said pyrotechnic element to burn, said windows of said combustible element comprising a means for viewing said burning pyrotechnic element from a distant point, said burning pyrotechnic element causing said combustible element to burn, where by said burning pyrotechnic and combustible element produce a trace visable from a distant point.

4,301,733
BULLET FOR SMOOTH BORE SHOTGUNS
Moises Arciniega Blanco, Telemaco No. 18, Madrid 27, Spain
Filed Apr. 20, 1979, Ser. No. 32,106
Claims priority, application Spain, Apr. 22, 1978, 469.062
Int. Cl.³ F42B *10/00*
U.S. Cl. 102—513 20 Claims

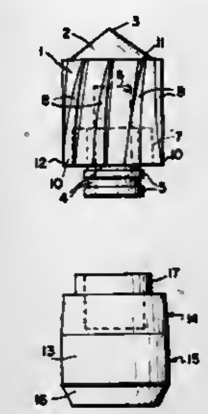

1. A bullet of the type for use in a smooth bore shotgun, said bullet comprising:
a metal nose part having a forward tip end, a rear end and a trunk joining said tip and rear ends, said trunk having uniformly circumferentially distributed around the outer surface thereof a plurality of ribs inclined to the longitudinal direction of said nose part, each said rib having a forward end and a rear end, the radial thickness or height of each said rib having a maximum at said forward end thereof and continuously decreasing to zero at said rear end thereof;
a plastic base part having a forward end and a rear end, said base part having adjacent said forward end a conical portion widening from said foward end, and said base part having a cylindrical portion joining said conical portion and extending therefrom toward said rear end; and
means for tightly joining said nose part to said base part solely by means of friction fit therebetween, said joining means comprising a male projection extending from one of said nose part or said base part and a female recess provided in the other of said nose part or said base part, said projection and recess being dimensioned such that said projection is tightly received within said recess upon pressing of said nose part and said base part together.

4,301,734
CASE MOUNTED MOORING SYSTEM
Frank Peregrim; James B. Johnson, both of Silver Spring, and Gerhard B. Winkler, Rockville, all of Md., assignors to The United States of America as represented by the Secretary of the Navy, Washington, D.C.
Filed Nov. 26, 1979, Ser. No. 97,480
Int. Cl.³ F42B *22/16*
U.S. Cl. 102—413 9 Claims

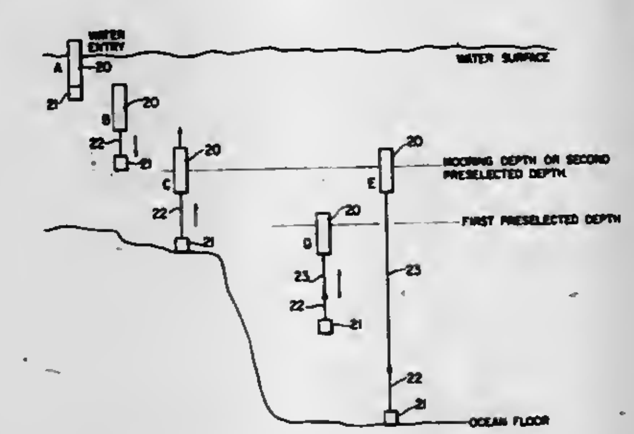

1. A mooring system for mooring a case in water at a preselected depth below the water surface from an anchor resting on the ocean floor comprising:
a case adapted to be moored in water;
an anchor;
means detachably securing the anchor to the case;
a line mooring the case to the anchor;
means positioned in said case for storing the mooring line;
means positioned in the case for initiating time delayed payout of the mooring line after said case has passed a first depth thereby permitting the anchor to descend to the ocean floor and the case to ascend toward the water surface; and
means positioned in the case for terminating payout of the mooring line when the case has ascended through a second depth which is between the first depth and the water surface;
whereupon after launching of said case and anchor, said securing means detaches the anchor from the case as the case and anchor descend through the water, said initiating means begins the time delayed payout of the mooring line from the storage means after the case descends through the first depth, and said terminating means terminates the ascent of the case after the case has ascended through the second depth.

4,301,735
VIBRATION TRANSMISSION SYSTEM FOR IGNITION DEVICES
Rolf Menne, Cologne, and Willi Petters, Leverkusen, both of Fed. Rep. of Germany, assignors to Dynamit Nobel Aktiengesellschaft, Troisdorf, Fed. Rep. of Germany
Filed Sep. 5, 1979, Ser. No. 72,751
Claims priority, application Fed. Rep. of Germany, Sep. 6, 1978, 2838806
Int. Cl.³ F42C *11/02;* F42B *23/26*
U.S. Cl. 102—427 6 Claims

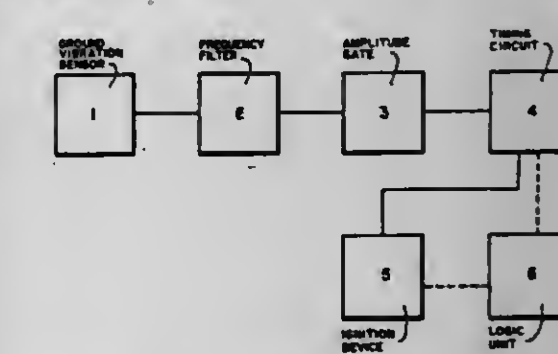

1. In a system for the transmission of ground vibrations to an ignition device of the type having a sensor for picking up mechanical vibrations and producing output signals corresponding in frequency and amplitude to that of the vibrations, the improvement comprising means disposed between the sensor and the ignition device comprising a frequency filter and a timing circuit for permitting the feeding of the output signal of the frequency filter to the ignition device only after the mechanical vibrations producing the output signal of the frequency filter have acted on the sensor for a predetermined, variable period of time.

4,301,736
SUPERSONIC, LOW DRAG TUBULAR PROJECTILE
Abraham Flatau, Joppa, and Joseph Huerta, Aberdeen, both of Md., assignors to The United States of America as represented by the Secretary of the Army, Washington, D.C.
Continuation-in-part of Ser. No. 670,814, Mar. 26, 1976, abandoned. This application Mar. 13, 1979, Ser. No. 20,140
Int. Cl.³ F42B *11/00, 13/00*
U.S. Cl. 102—503 12 Claims

1. An elongate tubular projectile having a longitudinal center axis, consisting of:
a cylindrical center throat portion having a wall thickness

defined by concentric inner and outer spaced-apart surfaces,

a forward compression section adjoining said throat portion and formed by two converging conical surfaces intersecting each other to form a sharp leading edge and enclosing a V-shaped leading edge angle, the bisector of which in the longitudinal cross-section is substantially parallel to said longitudinal center axis, and

an aft diffusion section adjoining said throat portion and formed by two converging conical surfaces forming a

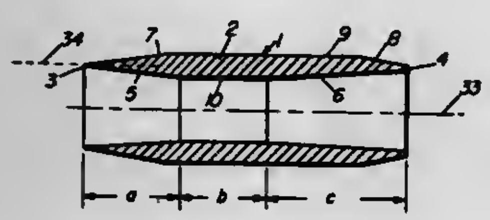

V-shaped trailing edge, said aft diffusion section having a smooth constant expansion angle and a smooth transition from said adjoining throat portion to said trailing edge,

said throat portion having constant diameter throughout the length of said inner surface,

said sharp leading edge defines a circular inlet having a predetermined first cross-sectional area for inlet airflow,

said throat portion diameter defines a constant second cross-sectional area for airflow through said throat portion and the ratio of said second area to said first area is not less than 0.6.

4,301,737

MULTI-PURPOSE KINETIC ENERGY PROJECTILE

Ladd Yuhash, Budd Lake, and Charles E. Lanizzani, Dover, both of N.J., assignors to The United States of America as represented by the Secretary of the Army, Washington, D.C.

Filed Oct. 4, 1979, Ser. No. 81,971

Int. Cl.^{3} F42B *11/06*

U.S. Cl. 102—518 **10 Claims**

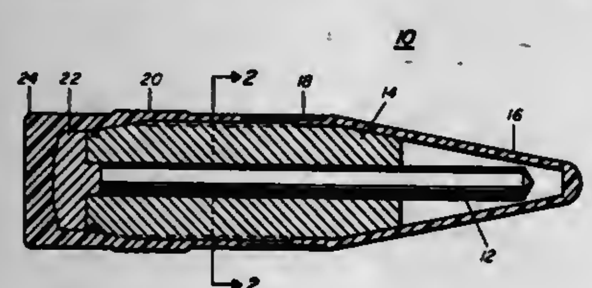

1. A dual purpose elongate gun-fired projectile comprising:

an elongate penetrator core axially aligned about the center longitudinal axis of said projectile,

a plurality of substantially flat elongate blades disposed radially about said penetrator core and generally parallel to said core, and adapted to disperse radially outwardly by centrifugal force as said projectile exits from said gun, and

a substantially rigid outer weakenable sheath over said core and said blades, said sheath being of a material relatively softer than said core and adapted to be weakened upon scoring of said sheath to permit said force to disperse said blades.

4,301,738

APPARATUS FOR THE REPLACEMENT OF RAILS OF A TRACK

Josef Theurer, Vienna, Austria, assignor to Franz Plasser Bahnbaumaschinen-Industriegesellschaft m.b.H., Vienna, Austria

Filed Oct. 22, 1979, Ser. No. 87,062

Claims priority, application Austria, Dec. 12, 1978, 8856/78

Int. Cl.^{3} E01B *29/20, 29/17*

U.S. Cl. 104—2 **17 Claims**

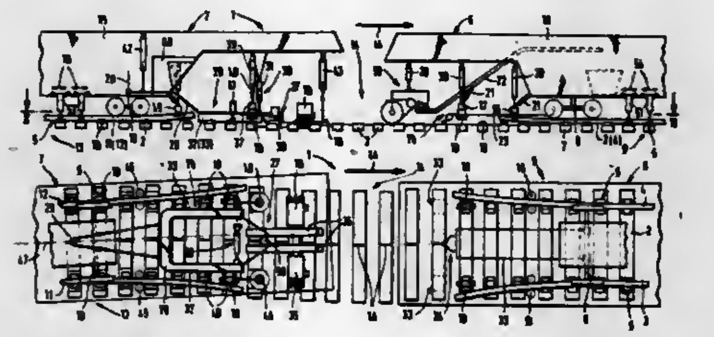

1. An apparatus for the continuous replacement of the rails of a track consisting of two rails fastened to ties, which comprises

(a) a forward track renewal vehicle means for removing the rails adjacent a first track section, the forward vehicle means including

(1) an undercarriage supporting the forward vehicle means on the rails to be removed for mobility along the track section in an operating direction, and

(2) tools for unfastening the rails from the ties and for removing the rails,

(b) a trailing track renewal vehicle means for replacing the rails adjacent a second track section, the trailing vehicle means including

(1) an undercarriage supporting the trailing vehicle means on the replaced rails for mobility along the second track section in the operating direction, and

(2) tools for laying the rails on the ties, and

(c) a monitoring device associated with the trailing track renewal vehicle means, the monitoring device being arranged to sense markings on the ties as the trailing vehicle means moves along the second track section and to be guided by the markings, the markings indicating the position of the first track section and the monitoring device being arranged to position the rails of the second track section in alignment with the first track section.

4,301,739

VEHICLE ADAPTED TO BE EXTERNALLY MECHANICALLY GUIDED, ESPECIALLY FOR THE PUBLIC LOCAL PASSENGER TRAFFIC

Herbert Mehren, Ludwigsburg, and Dieter Braun, Weinstadt, both of Fed. Rep. of Germany, assignors to Daimler-Benz Aktiengesellschaft, Stuttgart, Fed. Rep. of Germany

Filed Apr. 20, 1979, Ser. No. 32,016

Claims priority, application Fed. Rep. of Germany, Apr. 28, 1978, 2818754

Int. Cl.^{3} B61F *9/00*

U.S. Cl. 104—247 **24 Claims**

1. A vehicle adapted to be externally mechanically guided along guide tracks, the vehicle comprising a steerable vehicle axle means provided with steerable wheels arranged at respective sides of the vehicle, a steering linkage means for operatively connecting the steerable vehicle axle means with a steering wheel, support arm means rigidly mounted at wheel hubs of the steerable wheels and extending unilaterally forwardly in a driving direction of the vehicle, transverse guide roller means arranged at a forward end of each of the support arm means and forwardly of the respective steerable wheels for enabling an automatic guide track side influencing of a turning angle of the steerable wheels, characterized in that transverse

guide roller means are arranged in a fixed correlation with a wheel plane of the respective steerable wheels, the steering wheel means includes a hub means, and in that drive motor

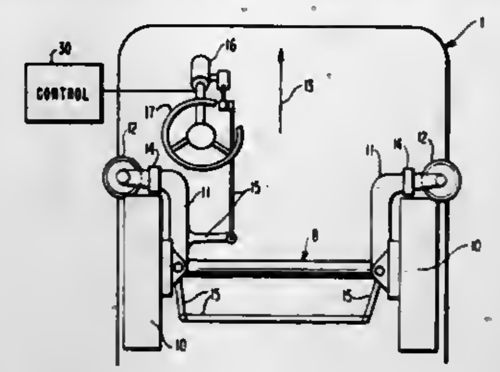

means are provided for selectively exerting a torque which is freely selectable in its effective direction on the steering wheel of the vehicle.

4,301,740

SUSPENSION SYSTEM FOR A WHEEL ROLLING ON A FLAT TRACK

Robert A. Frosch, Administrator of the National Aeronautics and Space Administration, with respect to an invention of, and Houston D. McGinness, Los Angeles, Calif.

Filed Nov. 17, 1978, Ser. No. 961,833

Int. Cl.^{3} B61F *3/00;* B61J *1/12;* H01G *3/04*

U.S. Cl. 105—1 A **10 Claims**

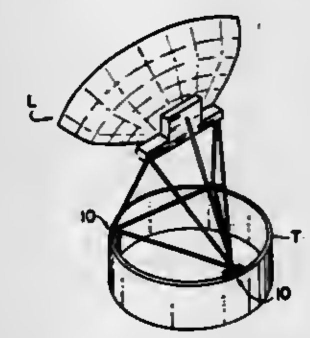

1. In combination with a truck for supporting a moving load including a wheel having an uncrowned wheel surface adapted to roll along a track having a flat upper surface, a suspension system comprising:

A. a wheel frame supporting the wheel for rolling engagement with the track along a moving line of contact transversely related to the flat upper surface thereof;

B. a load supporting bed; and

C. means for attaching said bed to said wheel frame including at least one pair of flexure support struts interconnecting said bed and said wheel frame, said struts being disposed in angularly related planes intersecting the top surface of the track along a line substantially bisecting a line of contact established between the uncrowned wheel surface and the flat upper surface of the track.

4,301,741

HOPPER CAR OUTLET GATE ASSEMBLY WITH SELF CLEANING GEAR AND RACK ACTUATION ARRANGEMENT

Osvaldo F. Chierici, Geneva, Ill., assignor to Holland Company, Aurora, Ill.

Filed Oct. 22, 1979, Ser. No. 86,644

Int. Cl.^{3} B61D *7/20;* E05B *65/14*

U.S. Cl. 105—282 P **3 Claims**

1. In a hopper outlet gate assembly for bulk material carrying railroad hopper cars in which the car hopper has an outlet opening, with the assembly including a frame forming an outlet port of quadrilateral configuration, a door plate of quadrilateral configuration for closing the port, a slideway for the door plate, which slideway extends in a substantially horizontal plane sidewise and across the outlet port, with the door plate defining opposed side edge portions that parallel the slideway and define the width of the door plate, and gear and rack means for moving the door plate longitudinally of the slideway between a first position in which it is disposed across the port to close same and a second position in which it is disposed to one side of the port to open same for discharge of the bulk materials therefrom,

the improvement wherein said frame comprises:

a pair of spaced apart parallel longitudinal frame members paralleling the slideway,

a pair of spaced apart parallel transverse frame members fixed between said longitudinal frame members to form the outlet port,

said frame members being formed to each define a shelf portion on which the door plate rides,

said frame member shelf portions being in substantial coplanar relation and being coplanar with the slideway,

with the door plate side edge portions riding on the shelf portions of said longitudinal frame members, respectively, in sliding relation thereto,

and with the slideway having a centerline extending longitudinally thereof that is centered between said longitudinal frame member shelf portions,

said longitudinal frame members projecting laterally of the port from one side of the port beyond one of said transverse members,

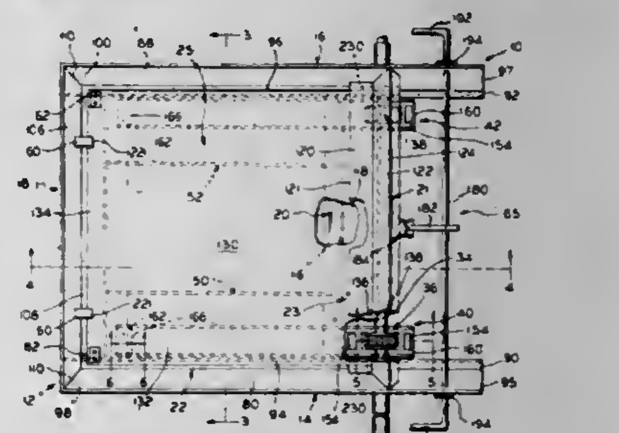

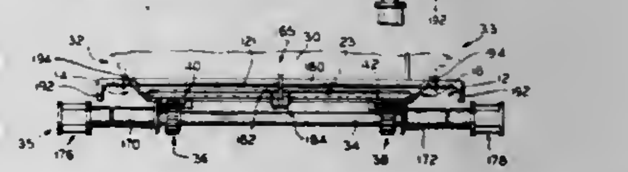

a bridge member fixed between said longitudinal frame members above and spaced from said one transverse member,

said bridge member defining a header portion overlying said one transverse member shelf portion in closely spaced relation thereto to define a window opening through which the slideway extends and in which said door plate is mounted in closely spaced relation to said header portion,

said door plate being proportioned lengthwise of said slideway to project exteriorly of the assembly through the window opening to define an outwardly projecting portion thereof when said door plate is in its first position,

said gear and rack means comprising:

a shaft journalled in said frame below the slideway and adjacent said bridge member, and extending crosswise of the slideway and paralleling said transverse frame members,

and a pair of gear and rack sets coupling said shaft to said door plate for translating rotational movement of said shaft into linear movement of said door plate between said positions,

said gear and rack sets each comprising:

an elongate plate member fixed to the underside of said door plate and extending longitudinally of the slideway,

said plate members being spaced from and vertically below said door plate and paralleling the slideway,
said plate members being disposed between said shelf portions of said longitudinal frame members and being in spaced apart coplanar relation transversely of the door plate, and being substantially equally spaced from the slideway longitudinal centerline,
said plate members each being formed to define a row of uniformly spaced apart through apertures, which row extends longitudinally of the respective said plate members,
first and second gears keyed to said shaft in coaxial relation thereto,
with said first gear being below one of said plate members and defining gear teeth in meshing relation with said row of apertures of said one plate member,
and with said second gear being below the other of said plate members and defining gear teeth in meshing relation with said row of apertures of said other plate member,
said meshing relation of said gear and rack sets comprising coupling means for effecting linear movement of the door plate between said positions, through said sets, on rotational movement of said shaft,
and means for rotating said shaft in either direction to move the door plate between said position,
said teeth of each of said gears being spaced from and below the door plate and protruding through, respectively, the respective said apertures of said plate members, respectively, in self cleaning relation thereto from the underside of same, when in said meshing relation, respectively, with the respective plate members, whereby said sets are self cleaning on rotation of said shaft, by the linear movement effecting action of said coupling means, and said sets in being on the underside of the door plate, the door plate thereby remains free of lifting bias induced by operation of said coupling means whereby the door plate rides level with the slideway,
said plate members of said sets having end portions extending adjacent to said door plate one edge,
with said plate members each including adjacent said end portions of same a bulk material dam for blocking bulk material discharge into said sets.

4,301,742
PARTITION SHEET TO SIDE SHEET CONNECTION FOR COVERED HOPPER CARS
Babgaunda Patil, Birmingham, Ala.; Phillip G. Przybylinski, Schereville, and Roger D. Sims, Munster, both of Ind., assignors to Pullman Incorporated, Chicago, Ill.
Filed Feb. 4, 1980, Ser. No. 118,137
Int. Cl.³ B61D *7/00, 17/00*
U.S. Cl. 105—406 R **14 Claims**

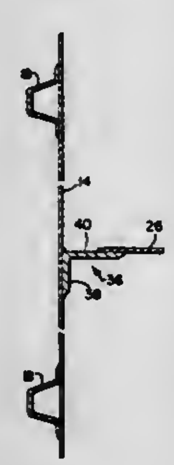

1. A railway hopper car including a car body having transversely spaced vertical side sheets,
a plurality of diagonally extending slope sheets connected to said side sheets and forming a plurality of hoppers having lower discharge openings, and a plurality of partition sheets having laterally spaced vertical side portions for compartmentalizing said hoppers, the improvement comprising;
means for connecting each side portion of each partition sheet to said side sheets within said car,
said vertical side portions spaced from said side sheet,
said means including a post connected to a side sheet and extending vertically therewith,
said post having an outwardly extending leg,
said vertical side portions being rigidly connected with said legs, and
said means for connecting enhancing side sheet rotation upon loading of said partition sheet thereby reducing fatigue fractures in said side sheet to partition sheet connection.

4,301,743
PALLET
Lewis C. Keller, Andover, Mass., assignor to Service Warehouse Company, Wilmington, Mass.
Filed Jun. 1, 1979, Ser. No. 44,776
Int. Cl.³ B65D *19/26*
U.S. Cl. 108—53.1 **8 Claims**

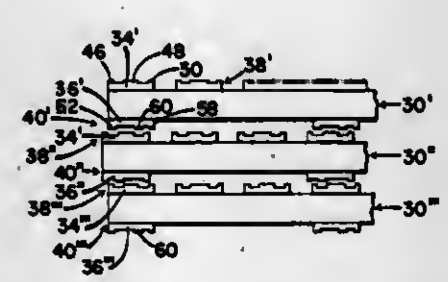

1. A pallet for carrying and storing goods comprising:
lower and upper load bearing decks and separators disposed between and secured to the decks enabling a fork lift or pallet jack to be inserted between the decks,
and locking means formed in the lower and upper decks and confined to the planes of the decks for interlocking a pair of identical pallets together against relative translational motion when stacked in overlapping relationship,
said upper and lower decks each being composed of a plurality of parallel boards, said locking means comprising ribs and grooves formed in said boards,
each of the boards in the upper deck having in its top surface a plurality of ribs and grooves, and each of the boards in the lower deck having in its bottom surface a plurality of ribs and grooves,
the boards of one of the decks having a pair of grooves of substantially the same width separated by a rib of greater width,
and the boards of the other deck having a pair of ribs each adapted to fit into the grooves in the boards of the other deck of another pallet and having a relatively wide groove for receiving a rib on the boards of the other deck,
the configuration of the ribs and grooves in the upper and lower deck boards causing the pallets to interlock in an alternately offset configuration when the pallets are alternately reversed 180° with respect to one another.

4,301,744
TABLE SLIDE DEVICE
Thomas G. Walter, Wabash, Ind., assignor to B. Walter & Company, Inc., Wabash, Ind.
Filed Mar. 20, 1980, Ser. No. 131,882
Int. Cl.³ A47B *1/04, 1/10*
U.S. Cl. 108—77 **9 Claims**

1. A slide device for supporting the folding leaf of a drop-leaf table comprising an elongated bar, an elongated retainer channel having opposite ends which receives said bar for lengthwise reciprocation, said channel having oppositely extending coplanar flanges on opposite sides thereof which define a substantially flat mounting surface adapted to mount said channel on the underside of a tabletop, said bar having an upper surface spaced below said mounting surface, a first boss on each flange near one end of said channel which projects above said mounting surface, a second boss of substantially the same height above said surface as said first boss on each flange

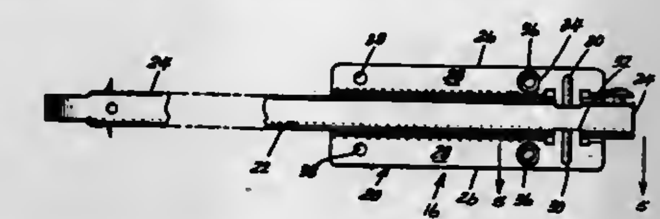

and disposed adjacent to said first boss on the side thereof toward the other end of said channel, each second boss having a first mounting hole therethrough and each said flange having a second mounting hole near said other end of said channel, said bar being movable between a retracted position substantially within said channel and an extended position extending outwardly from said other end of said channel for supporting the folding leaf in a horizontal position generally aligned with said table top.

4,301,745
HEIGHT ADJUSTABLE TABLE TOPS
John G. Dale, Wilmslow, England, assignor to Hazel Grove Music Company Ltd., Cheadle, England
Filed Sep. 28, 1979, Ser. No. 79,963
Claims priority, application United Kingdom, Dec. 16, 1978, 48979/78
Int. Cl.³ A47B *9/00*
U.S. Cl. 108—144 **11 Claims**

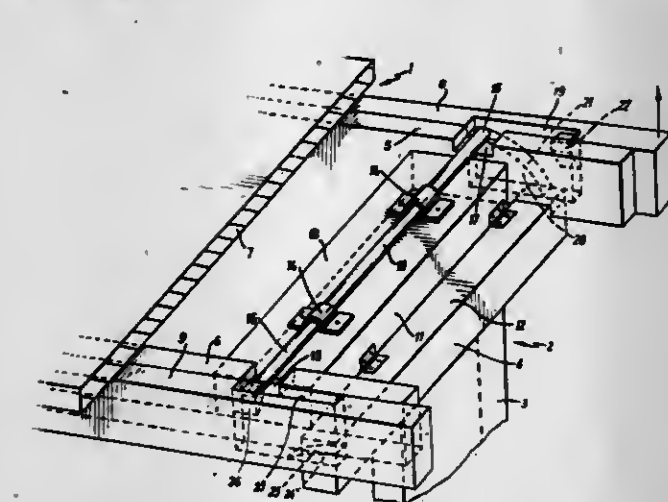

1. A table having a table top supported on a lower support structure and a height adjusting mechanism between said table top and support structure, said mechanism comprising a rigid support member movably mounted on one of said table top and support structures so as to be movable between an extended position at which it extends between the table top and the support structure to support the former on the latter, and a retracted position at which the table top is supported on the support structure at a lower height, the support member being connected to the other of said table top and support structure via a cam link comprising a cam surface and a cam follower wherein said cam surface is formed on, and said cam follower is attached to, respective ones of said support member and said other of said table top and support structure whereby lifting of said table top relative to said support structure causes said cam follower to move along said cam surface to deflect said support member to its extended position.

4,301,746
DEASHER
Hans-Jürgen Pech, Dorsten, and Herbert Schäfer, Gladbeck, both of Fed. Rep. of Germany, assignors to Deutsche Babcock Aktiengesellschaft, Oberhausen, Fed. Rep. of Germany
Filed Jun. 20, 1980, Ser. No. 161,654
Claims priority, application Fed. Rep. of Germany, Jul. 13, 1979, 2928345
Int. Cl.³ F23J *1/02*
U.S. Cl. 110—165 R **2 Claims**

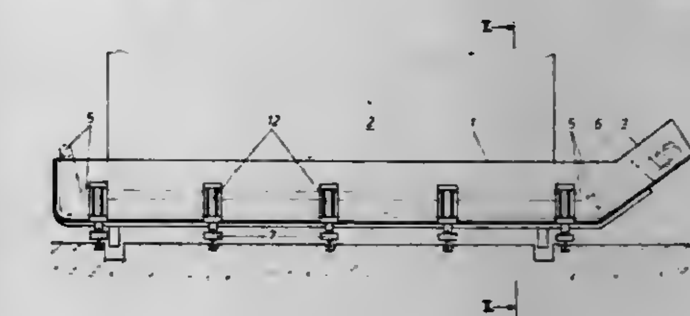

1. A deasher arrangement comprising: ash hopper means of a boiler; a water-filled trough arranged underneath said ash hopper means; said water-filled trough being laterally movable and having conveying means; said trough having lifting means with lift corresponding at least to expansion of the boiler; a dipping element connected to said ash hopper means and permanently extending into the water fill of the said trough during operation of the boiler; said trough comprising two sections separated by a partition wall and having one conveying means each; said partition wall having a height which is lower than side walls of said trough; said partition wall having a top which is situated above the bottom of the dipping element when the boiler is in operation and the trough is raised.

4,301,747
HIGH TEMPERATURE FURNACE WITH IMPROVED SLAG TAP
Hanford N. Lockwood, Jr., San Mateo; Louis D. Siegert, Burlingame, and Steven B. Brock, Palo Alto, all of Calif., assignors to Coen Company, Inc., Burlingame, Calif.
Filed Jun. 25, 1979, Ser. No. 52,056
Int. Cl.³ F23J *1/00*
U.S. Cl. 110—171 **30 Claims**

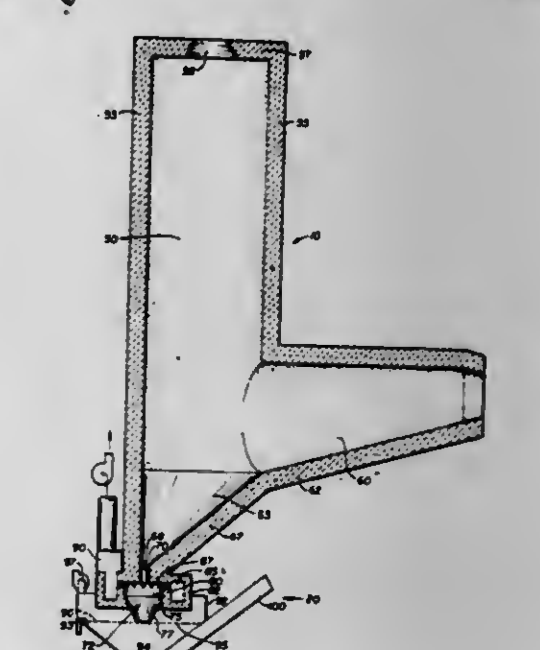

1. In a high temperature furnace for generating hot gases by combusting an ash-bearing fuel, the furnace including a combustion chamber, a burner near one end of the combustion chamber for generating the hot gases and a duct near the other end of the combustion chamber through which the hot gases pass out of the combustion chamber, the temperature of the

gases being sufficiently high to melt ash in the fuel to form molten slag, an improved slag tap into which slag flows comprising:

means defining a downwardly open slag-receiving chamber disposed below a portion of and in flow communication with the combustion chamber; and

means for actively withdrawing a sufficient portion of the hot gases from the combustion chamber into the slag-receiving chamber and for heating slag passing through the slag-receiving chamber sufficiently with the portion of the hot gases to maintain such slag in its molten state, thereby preventing it from solidifying while in the slag-receiving chamber.

4,301,748

ARRANGEMENT IN FLUIDIZED BED INCINERATOR

Sverre Laugerud; Herman Etnestad, and Frode Pedersen, all of Gjovik, Norway, assignors to O. Mustad & Don A/S, Gjovik, Norway

Filed Jan. 23, 1980, Ser. No. 114,643

Claims priority, application Norway, Jan. 25, 1979, 790250

Int. Cl.³ F23G *5/00; F27B 15/00*

U.S. Cl. 110—245 6 Claims

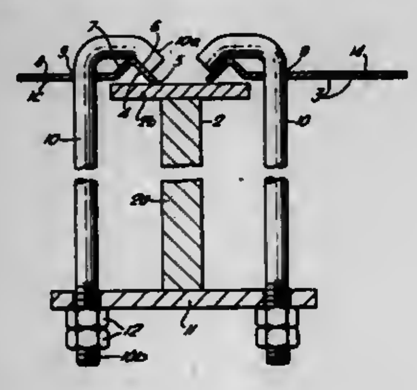

1. An incinerator having a perforated constriction plate for communicating fluidizing fluid to a fluidized bed of refractory materials supported by the plate, the improvement comprising:

a plurality of small perforated plate elements constituting said constriction plate, said plate elements being spaced apart by open areas for permitting free expansion of said elements under the heat of the fluidized bed;

a framework for supporting said plate elements, the rims of said elements resting on support surfaces of said framework for sliding movement thereon; and

means for securing the rims of the elements to the support surfaces for inhibiting flow of refractory materials between said elements and said support surfaces, and for permitting relative movement of said elements and support surfaces during expansion and contraction.

4,301,749

FLUIDIZED BED COMBUSTION

William M. Urquhart, Renfrew, Scotland, assignor to Babcock & Wilcox Limited, London, England

Filed Dec. 26, 1978, Ser. No. 973,186

Int. Cl.³ F23D *19/00;* F23C *5/16*

U.S. Cl. 110—261 2 Claims

1. A fluidized bed combustor having a fluidized bed containing combustible solid material overlying a lower, static, layer into which material from the fluidized layer falls, means through which material from the lower layer drains from the combustor, fluidizing medium being supplied to one part of the

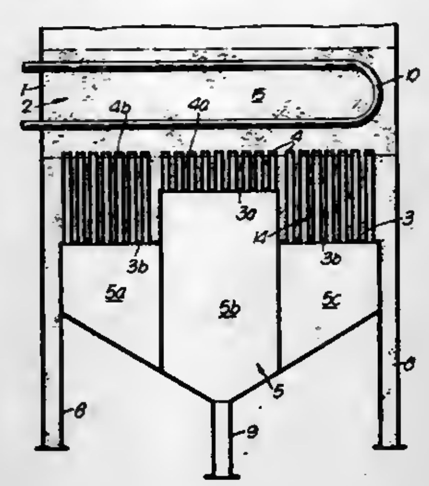

fluidizing bed with a velocity greater than that at which fluidizing medium is supplied to an adjacent part of the bed.

4,301,750

METHOD FOR PYROLYZING WASTE MATERIALS

William M. Fio Rito, San Diego, and Ralph E. Kidd, Long Beach, both of Calif., assignors to Pan American Resources, Inc., San Diego, Calif.

Division of Ser. No. 886,807, Mar. 15, 1978, Pat. No. 4,205,613. This application Jan. 2, 1980, Ser. No. 109,040

Int. Cl.³ F23G *1/00*

U.S. Cl. 110—346 3 Claims

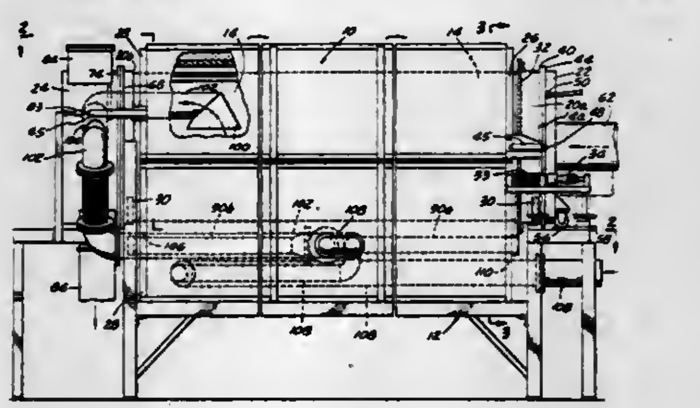

1. A method of continuously pyrolyzing waste materials and recovering therefrom useful, energy producing materials and chemical by-products, comprising the steps of:

(a) continuously introducing the waste materials to be prolyzed into a combustion chamber;

(b) raising the temperature of the combustion chamber to a temperature sufficient to pyrolyze the waste materials;

(c) drawing from the combustion chamber a portion of the combustion gases produced by pyrolysis of the waste materials;

(d) drawing oxygen containing gas from externally of the combustion chamber;

(e) raising the temperature of the oxygen containing gas to approximately the temperature of the combustion gases;

(f) controllably mixing the combustion gases and the oxygen containing gas to produce a combustible gaseous mixture; and

(g) burning the gaseous mixture thus formed to heat the combustion chamber.

4,301,751

TUFTING MACHINE FOR PRODUCING A VARIETY OF PILE FABRICS

L. Justin Caylor, Dalton, Ga., assignor to Cherokee Sheet Metal Works, Inc., Dalton, Ga.

Filed Oct. 17, 1979, Ser. No. 85,790

Int. Cl.³ D05C *15/00*

U.S. Cl. 112—79 R 18 Claims

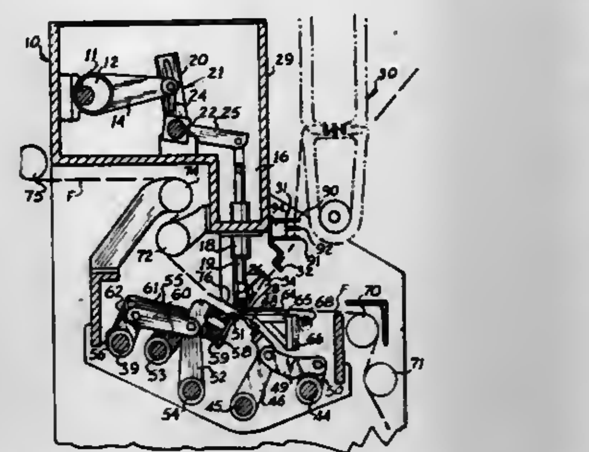

1. A tufting machine, including at least one needle for successively carrying a yarn through a backing fabric as said backing fabric moves along a path, and a looper successively engageable with said yarn to form a plurality of loops as said needle is withdrawn from said backing fabric, the improvement wherein said looper is a loop pile looper movable in a plane, said plane being perpendicular to said path of said backing fabric and parallel to a line drawn through said plurality of loops, and further including a cut pile looper aligned with said loop pile looper in the direction of motion of said backing fabric and movable in said plane, the arrangement being such that said plane passes through the centerline of both said loop pile looper and said cut pile looper, means for moving said loop pile looper and said cut pile looper towards each other to be adjacent to each other while one loop of said plurality of loops is on said loop pile looper, means for selectively tightening said yarn for causing selective transfer of said one loop from said loop pile looper to said cut pile looper, and means for severing loops while on said cut pile looper.

4,301,752

TUFTING APPARATUS FOR FORMING LOOP PILE

Gary L. Ingram, Ooltewah, and Paul E. Jolley, Chattanooga, both of Tenn., assignors to Spencer Wright Industries, Inc., Chattanooga, Tenn.

Filed Jul. 31, 1980, Ser. No. 174,119

Int. Cl.³ D05C *15/36*

U.S. Cl. 112—79 R 5 Claims

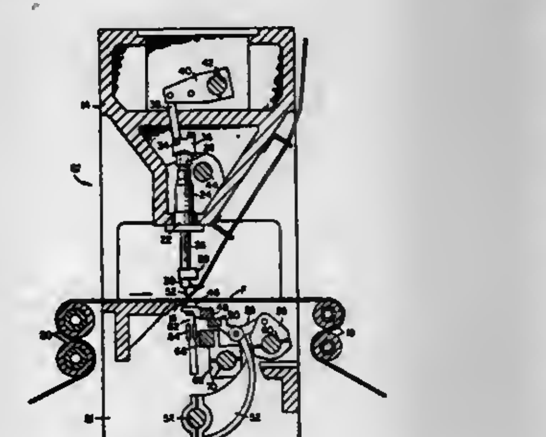

1. A looper for forming loop pile in a cut pile tufting machine, said looper comprising a planar body member having a blade and a shank including a mounting portion for mounting in a hook bar of the tufting machine, said blade extending forwardly from the shank and terminating at an upper edge in a loop seizing beak, said beak having a downwardly inclined rearwardly extending lower edge for seizing a loop of yarn, a yarn engaging edge formed on said blade extending abruptly downwardly from the rear of the lower edge of said beak, said blade having a bottom edge extending forwardly from said shank to said yarn engaging edge.

4,301,753

SEWING MACHINE WITH TAPE RECORDER FOR USER INSTRUCTION AND MEMORY PROGRAMMING

Günter Meier, Karlsruhe-Durlach, Fed. Rep. of Germany, assignor to Firma Dorina Nähmaschinen GmbH, Fed. Rep. of Germany

Filed Apr. 3, 1980, Ser. No. 136,984

Claims priority, application Switzerland, Apr. 19, 1979, 3676/79

Int. Cl.³ D05B *19/00, 87/04, 3/02*

U.S. Cl. 112—121.11 3 Claims

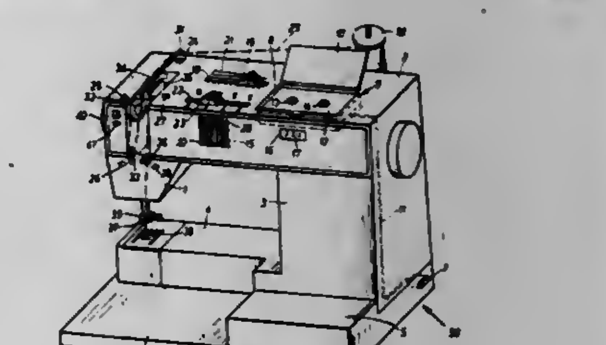

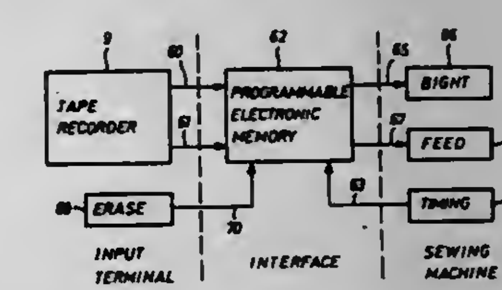

3. A sewing machine including a housing and a sound player associated with said housing having means for producing a sound for facilitating the operation thereof, said sewing machine housing includes a base portion, a standard upright portion and an upper arm carried by said standard, said sound producing device being installed in said upper arm and including a loudspeaker mounted in said housing and a tape recorder connected to said loudspeaker located within said upper arm, said housing having an opening aligned with the loudspeaker and a pattern control device in said housing and a control circuit having a programmable electronic memory in said housing connected to said pattern control device, said tape recorder adapted to receive a tape containing pattern data stored thereon readable by said control circuit to program said electronic memory for said pattern data.

4,301,754

ELECTRIC SEWING MACHINE

Kazuo Suzaki, Oohasuhigashi; Hirokazu Koda, Nara; Kenichi Nakamura, Nara; Syuich Yoshikawa, Nara, and Naoki Ohara, Toyota, all of Japan, assignors to Sharp Kabushiki Kaisha and Aishin Seiki Kabushiki Kaisha, both of Osaka, Japan

Filed Jan. 1, 1979, Ser. No. 44,759

Claims priority, application Japan, Jun. 3, 1978, 53-67070

Int. Cl.³ D05B *3/02*

U.S. Cl. 112—158 E 6 Claims

1. An electric sewing machine having a thread carrying

needle which is reciprocated in an axial direction thereof and is jogged in a lateral direction and a cloth-advancing mechanism for advancing a cloth in a direction perpendicular to the lateral direction at a predetermined pitch after each stitch is formed for forming a predetermined pattern of stitches, said sewing machine comprising:

a plurality of cam members stacked about a rotational axis, each of said cam members bearing information corresponding to a stitching pattern to be formed on the cloth;

cam follower means movable along the direction parallel to said axis for reproducing the information stored in each of said cam members;

means for transmitting the information reproduced by said cam follower means to said needle to reciprocally move said needle in correspondence with said information;

means for transferring said cam follower means from a position corresponding to one of said cam members to another position corresponding to another one of said cam members, said cam follower transferring means including and being driven by electric motor means;

means for detecting the position of said cam follower means and producing a first data signal representing the position of said cam follower, said means for detecting including: a timing cam mounted coaxially with said cam member

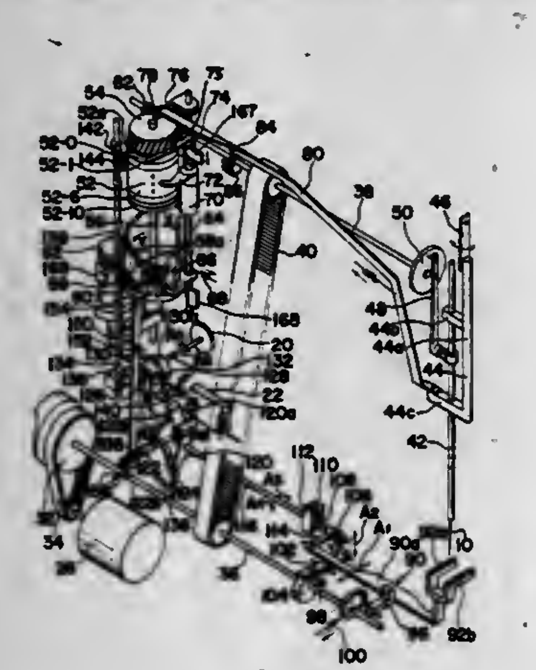

mounting axis for rotation simultaneously with said drum and provided with alternative projections and recesses corresponding to the respective flat surfaces of the drum;

an arm rotatably mounted on the rod member, having its free end slidably contacting with the periphery of the timing cam so as to oscillate about the rod member in correspondence with the projections and recesses;

a microswitch activated by said arm;

a flip flop which is set in response to the signal fed from the microswitch to produce pulse signals every time the cam follower reaches one of the cam members; and

a counter for counting the number of the pulse signals fed from the flip flop so that the counter produces said first data signal representative of the position of the cam follower;

manually operable switch means for selecting one of said cam members and for producing a second data signal representative of said selected one of said cam members; and

control circuit means for actuating said cam follower transferring means to transfer the cam follower means to a position corresponding to said selected one of said cam members by comparing the first data signal and the second data signal.

4,301,755

MULTIPLE PATTERN SEWING MACHINE

Masataka Kato, and Hiroo Shirai, both of Nagoya, Japan, assignors to Brother Kogyo Kabushiki Kaisha, Aichi, Japan

Filed Oct. 26, 1979, Ser. No. 89,263

Claims priority, application Japan, Nov. 20, 1978, 53-143152

Int. Cl.[3] D05B *3/02*

U.S. Cl. 112—158 E **9 Claims**

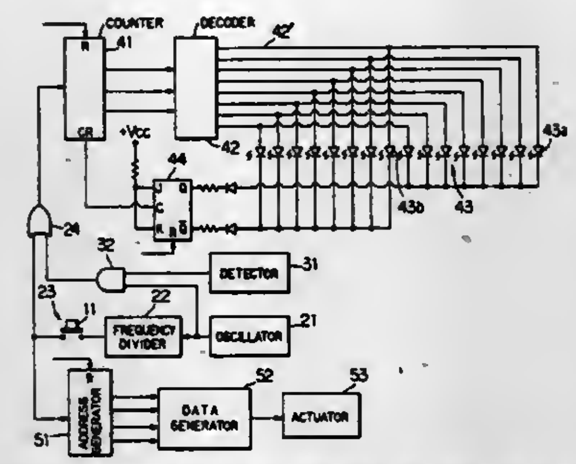

1. In a multiple pattern sewing machine having stitch forming instrumentalities, manually operable means for selecting a desired stitch pattern from among a plurality of predetermined stitch patterns, pattern displaying means on the front of the machine for indicating each of said stitch patterns, and first supplying means responsive to the operation of said manually operable means for supplying an indication signal of stitch pattern to said pattern displaying means so as to indicate the selected stitch pattern,

the improvement comprising:

(a) detecting means for detecting the occurrence of an abnormal condition in said machine and generating a signal indicative of detection of the abnormal condition;

(b) second supplying means responsive to the signal indicative of detection of the abnormal conditions for supplying an indication signal representing occurrence of the abnormal condition to said pattern displaying means and actuating said pattern displaying means to assume an abnormal condition warning state different from a pattern displaying state in which said selected stitch pattern is indicated.

4,301,756

DEVICE FOR THE INTERRUPTION OF THE EMBROIDERY NEEDLE MOVEMENT ON EMBROIDERY- OR SEWING MACHINES

Wolfgang Teetz, Kerken, and Alfred Desprez, Wachtendonk, both of Fed. Rep. of Germany, assignors to Maschinenfabrik Carl Zangs Aktiengesellschaft, Krefeld, Fed. Rep. of Germany

Division of Ser. No. 958,401, Nov. 7, 1978, abandoned. This application Feb. 1, 1980, Ser. No. 117,595

Claims priority, application Fed. Rep. of Germany, Nov. 7, 1977, 2749700

Int. Cl.[3] D05B *55/16*

U.S. Cl. 112—221 **5 Claims**

1. An embroidery machine, comprising

a main drive shaft,

a plurality of needle bars adapted for the working of different types and colors of threads respectively with an automatic change of the needle bars which are operatively driven respectively from time to time by said main drive shaft,

a guide rod arranged parallel to said needle bars,

a drive carriage is movably guided on said guide rod,

means for connecting said drive carriage to said main drive shaft, comprising a crank and pivotally connecting rod connected to each other and to said drive shaft and said drive carriage, respectively,

a contact member movably guided on said guide rod,

switch pawl means for coupling said drive carriage to said contact member,

a common needle bar block, means for mounting the latter displaceably transversely to an embroidery movement,

said needle bars are mounted moveably adjacent and parallel to one another in said common needle bar block,

a driver secured to each needle bar, respectively,

said needle bars being adapted to be operatively coupable selectively to said drive carriage via said drivers in an embroidery position,

a roller mounted on said driver of each of said needle bars, respectively,

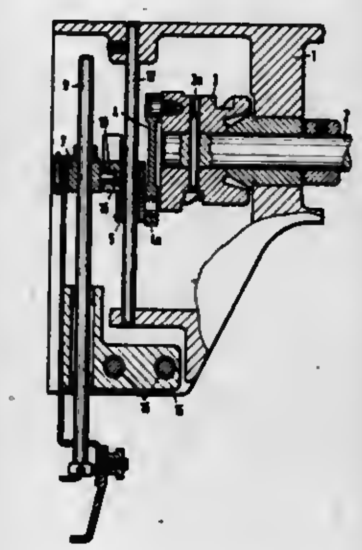

said contact member is formed with fork-shaped recess,

said roller is insertable in said fork-shaped recess of said contact member, respectively,

a stationary guide curve disposed at both sides of an upper dead-point position of said contact member, respectively,

said rollers of the needle bars which are disposed outside of the embroidery position engage said guide curve,

the distance of each said guide curve increases from a table of the embroidery machine with increasing distance from said contact member.

4,301,757

AUTOMATIC THREAD TENSION CONTROL DEVICE OF SEWING MACHINE

Yoshiaki Tounomura, Hachioji, Japan, assignor to Janome Sewing Machine Co. Ltd., Tokyo, Japan

Filed Jun. 5, 1979, Ser. No. 45,777

Claims priority, application Japan, Jun. 13, 1978, 53-70340

Int. Cl.[3] D05B *47/00, 15/00*

U.S. Cl. 112—254 **6 Claims**

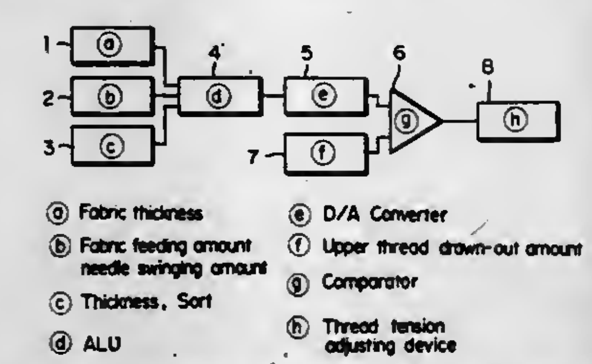

1. A thread tension control device for a sewing machine of the type having a pressor bar with a pressor foot, a spool for supplying an upper thread, a feed dog for feeding a fabric to be sewn and a thread tension device including a pair of thread tension discs, comprising means for measuring the amount of thread actually drawn out from the spool during operation; means for changing the measured amount of thread into a first electrical signal operatively connected to said means for measuring the amount of thread; means for measuring the thickness of a fabric to be sewn; means for changing the measured thickness into a second electrical signal operatively connected to said means for measuring the thickness of a fabric; means for measuring a fabric feeding amount; means for changing the measured fabric feeding amount into a third electrical signal operatively connected to said means for measuring a fabric feeding amount; means for measuring the thickness of thread to be used; means for changing the measured thickness of the thread into a fourth electrical signal operatively connected to said means for measuring the thickness of thread; means for receiving the second, third and fourth electrical signals and changing the same into a value identifying the desired amount of thread drawn out from the spool on the stitching conditions; comparator means for comparing said value identifying the desired amount of thread with said first signal identifying the actual amount of thread drawn out from the spool, to produce a difference value; and means for adjusting the thread tension device operatively connected to said tension discs and to said comparator means and operative for adjusting the position of said tension discs in response to said difference value.

4,301,758

CRAFT WITH AT LEAST TWO HULLS

Charles E. F. Riviere, Neuilly-sur-Seine, France, assignor to Comex Industries, Marseilles, France

Continuation-in-part of Ser. No. 935,864, Aug. 22, 1978, abandoned, which is a continuation of Ser. No. 770,318, Feb. 18, 1977, abandoned, which is a continuation-in-part of Ser. No. 565,609, Apr. 7, 1975, abandoned. This application May 3, 1979, Ser. No. 35,540

Claims priority, application France, Apr. 11, 1974, 74 12711

Int. Cl.[3] B63B *1/10*

U.S. Cl. 114—61 **3 Claims**

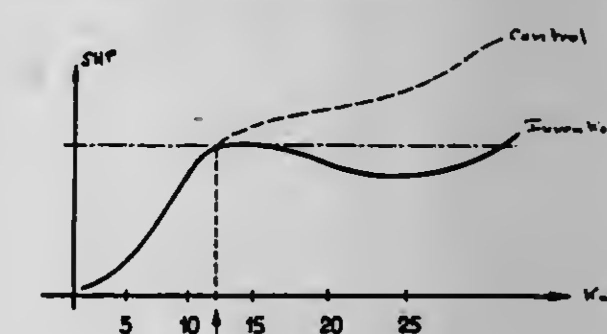

3. A ship of a type comprising two lateral displacement hulls and a non-immersed central platform joining the two lateral hulls, characterized by the combination of shapes and dimensional ratios defined hereunder that must be taken together, L being the length of the ship at the water line:

$$2L/45<r<4L/45 \quad \text{(I)}$$

where r is the maximum interior bulge of one hull

$$L/6<c<L/4 \quad \text{(II)}$$

where c is the distance between the hulls at the maximum bulge, or the width of the Venturi bottle-neck

$$L/3<d<L/2 \quad \text{(III)}$$

where d is the distance from the bow to the Venturi bottle-neck

$$L/20<i \quad \text{(IV)}$$

where i is the immersed depth of the hull under normal load or draught, and by the fact that each hull possesses a longitudinal axis and further comprises an inner and an outer bulge situated on either side of the said longitudinal axis; that each hull presents an unsymmetry with respect to the said longitudinal axis; and that the said outer bulges are located further back than the inner bulges.

4,301,759
CONTROL SYSTEM, PARTICULARLY FOR USE ON SHIPS
Dirk de Vries, Scharnegoutum, Netherlands, assignor to Stork Kwant B.V., Sneek, Netherlands
Continuation-in-part of Ser. No. 766,852, Feb. 9, 1977, abandoned. This application Jan. 18, 1979, Ser. No. 4,560
Claims priority, application Netherlands, Feb. 12, 1976, 7601464
Int. Cl.³ B63H ***25/52;*** **G05G** ***11/00***
U.S. Cl. 114—144 E **8 Claims**

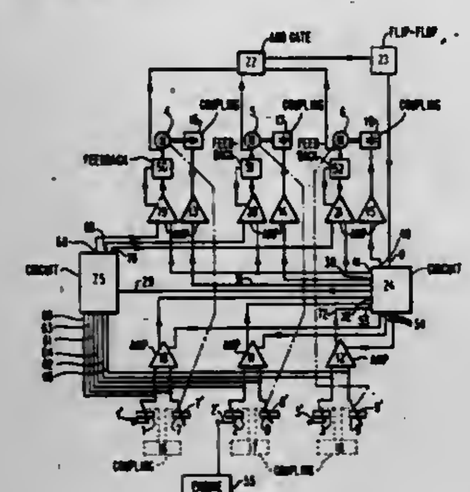

1. A control system for controlling a device, comprising:
a plurality of control members electrically coupled with one another and the device, every control member including potentiometer means for generating an electrical potentiometer signal indicative of the position of the control member;
a plurality of follow-up members which may be coupled to the control members, there being one follow-up member for each control member, every follow-up member including movement means for moving the follow-up member, and every follow-up member including potentiometer means for generating an electrical potentiometer signal indicative of the position of the follow-up member;
a plurality of differential means, each connected to the potentiometer means of a corresponding pair of a control member and a follow-up member, the differential means generating a difference signal representing the difference in position of the control member and the follow-up member; and
control signal means coupled to the differential means for providing control signals to the movement means in response to the difference signals so that the follow-up members may be aligned in position with the control members.

4,301,760
METHOD FOR POSITIONING A WATERCRAFT, IN PARTICULAR A DRILLING SHIP AS WELL AS RELEVANT DEVICES
Giorgio Cassone, and Franco Scolari, both of San Donato Milanese, Italy, assignors to Saipem S.p.A., Milanese, Italy
Continuation of Ser. No. 715,057, Aug. 17, 1976, abandoned, which is a continuation of Ser. No. 542,711, Jan. 21, 1975, abandoned. This application Jul. 19, 1979, Ser. No. 58,948
Claims priority, application Italy, Jan. 21, 1974, 19608 A/74
Int. Cl.³ B63H ***25/42***
U.S. Cl. 114—144 B **8 Claims**

1. A method of positioning a drilling ship in drilling position above a deep-sea well, comprising the steps of:
coupling the ship to a plurality of anchors secured to the sea floor for confining movement of the ship generally to a first generally circular area on the surface of the sea, the perimeter of said first circular area being defined by the outer limit of movement of the ship when acted upon by external forces no greater than a first predetermined maximum;
monitoring the position of the ship and the external forces tending to change its position, and securing values for said external forces;
introducing the values for said external forces into a computer which controls operating status of a plurality of adjustable propellers on the ship, and
activating propellers on the ship essentially only when the external forces acting on the ship tend to move the ship beyond the first generally circular area for confining movement of the ship generally to a second generally

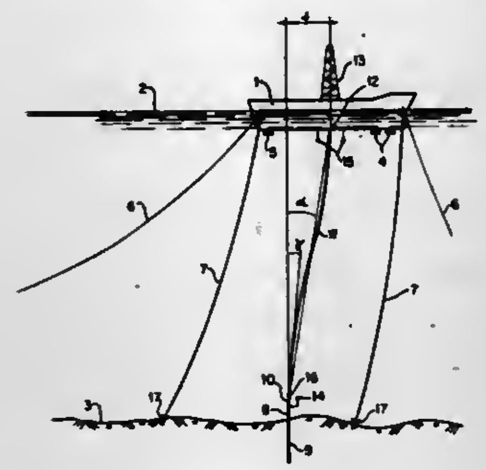

circular area having a greater area than said first generally circular area,
such that when the external forces acting on the ship tend to change the ship's position to no greater an extent than the perimeter of the first generally circular area, the ship is confined to movement generally within said first area essentially only by the confining action of the anchors, but when the external forces tend to move the ship beyond the perimeter of the first generally circular area, the propellers are activated to cooperate with the anchors to confine movement of the ship generally within the perimeter of the second generally circular area.

4,301,761
DEPTH AND HOVER CONTROL SYSTEM FOR UNMANNED UNDERWATER VEHICLE
Harold E. Fry, Chatsworth, and Arnold L. Peters, Burbank, both of Calif., assignors to The United States of America as represented by the Secretary of the Navy, Washington, D.C.
Filed May 22, 1980, Ser. No. 152,449
Int. Cl.³ B63G ***8/14, 8/22, 8/24***
U.S. Cl. 114—331 **11 Claims**

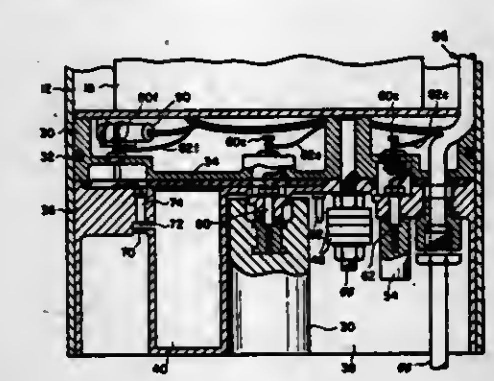

1. A hovering control system in combination with an underwater vehicle for causing said vehicle to seek a predetermined assigned depth and to hover about said depth, said system comprising:
body means defining a plurality of normally closed, initially empty chambers, each adapted to be flooded by a predetermined volume of water;
vernier weight means including at least one large weight member of first predetermined weight in water and a plurality of small weight members each of a second predetermined weight in water substantially equal to the weight of said predetermined volume of water;
said vehicle and control system initially having a negative buoyancy substantially equal to said first predetermined weight in water of said large weight member whereby upon initial deployment of said vehicle it will begin to plummet;
control means, responsive to predetermined depth conditions, for causing said weight members to be dropped and said chambers to be flooded in a sequence that will alternate said vehicle between positive and negative buoyancy states whereby said vehicle will hover by cyclical travel substantially between an upper tolerance depth and a lower tolerance depth.

4,301,762
CORN BUTTERING DEVICE
Jackson S. Burnett, Jr., 643 Crystal Dr., Spartanburg, S.C. 29302
Filed Oct. 6, 1980, Ser. No. 194,472
Int. Cl.³ B05C ***3/09***
U.S. Cl. 118—16 **8 Claims**

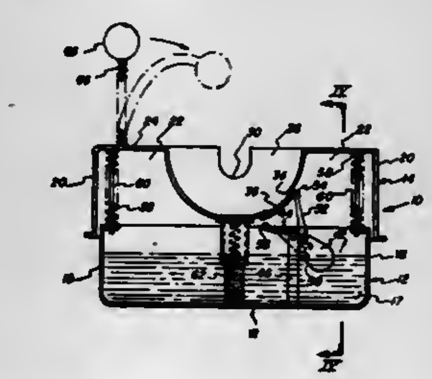

1. Apparatus for applying a coating of butter or butter-substitute to an ear of corn comprising a pan for containing a heated liquid, a generally elongate open-topped receptacle for containing liquid butter mounted in said pan above the bottom thereof for pivotal movement about a longitudinal axis of the receptacle, a cover for said pan having an elongate recess in the upper surface thereof for receiving an ear of corn therein, an elongate slot in one side of the recess for communication with said open-topped receptacle when said cover is lowered in covering relation with said pan, and said cover being engageable with said receptacle when the cover is moved downwardly toward the pan to cause pivotal movement of the receptacle about is longitudinal axis and into communication with the cover slot to discharge liquid butter from the receptacle opening into the corn-receiving recess of the cover.

4,301,763
POWDER DISPENSING APPARATUS
Edward G. Goldstone, Huntington Woods, and Clayton E. Peal, Rochester, both of Mich., assignors to Dayco Corporation, Dayton, Ohio
Filed Aug. 13, 1980, Ser. No. 177,699
Int. Cl.³ B05C ***19/00***
U.S. Cl. 118—308 **9 Claims**

1. In an apparatus for dispensing a powder-like material by gravity on a workpiece with a minimum contamination of the immediate environment; said apparatus comprising a substantially horizontally disposed tubular body having a single elongate slot through a bottom portion thereof; said slot extending through said tubular body substantially perpendicular to its central longitudinal axis; conveying means movable within said body for moving said powder-like material over said slot enabling gravity flow therethrough; said conveying means comprising a flexible conveying device which is movable through said tubular body and a plurality of flights fastened in spaced relation on said device for engaging and moving said powder-like material along said tubular body and over said slot enabling said dispensing therethrough with substantial uniformity; said slot having an elongate dimension disposed substantially parallel to said central longitudinal axis and having a substantially rectangular effective discharge area; the improvement in which said tubular body is defined as a pipe made of a resilient material and has said slot extending through said bottom portion thereof and further comprising means for changing said discharge area enabling controlled dispensing of said powder-like material through said slot; said means for

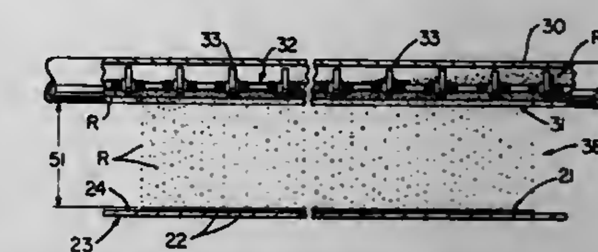

changing said discharge area comprising, a pair of slits extending through the lower portion of said pipe in spaced parallel relation perpendicular to said axis, said slits coinciding with opposite ends of said slot and extending approximately to a diametral plane through said pipe, said slot and slits defining a pair of substantially quarter-cylindrical portions of said pipe on opposite sides of said slot, and means for urging at least one of said quarter-cylindrical portions relative to the other by applying urging forces thereagainst within the elastic limit of said pipe and thus provide temporary distortion thereof to enable changing said effective discharge area and thereby enable controlled dispensing of said powder-like material through said slot.

4,301,764
INSTALLATION FOR ELECTROSTATIC DEPOSITION OF POWDER ON OBJECTS
Michel Campion, Bitche, and Alain Gernez, St. Jean de la Ruelle, both of France, assignors to Compagnie Europeenne pour l'Equipement Menager "CEPEM", Paris, France
Filed Nov. 20, 1979, Ser. No. 97,112
Claims priority, application France, Nov. 21, 1978, 78 32753
Int. Cl.³ B05B ***5/02***
U.S. Cl. 118—634 **21 Claims**

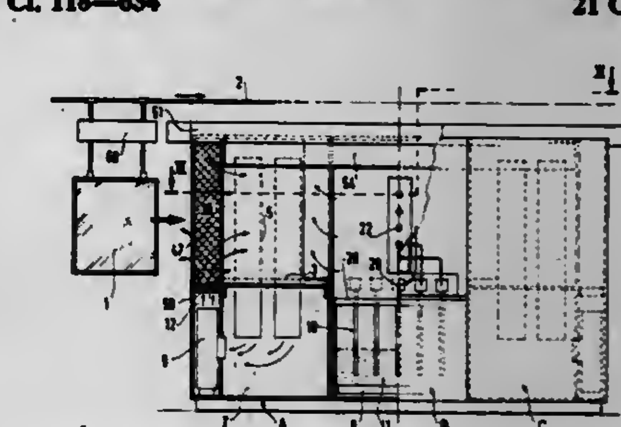

1. In an installation for electrostatic deposition of powder on continuously travelling objects, said installation comprising:
a conveyor,
an elongated object treatment cage extending longitudinally and having a slot within the top of said cage extending throughout the length of said cage, an opening within one end of the cage forming a side entrance aligned with said slot and an opening within the opposite end of said cage forming an exit,
said conveyor being positioned vertically above said cage, aligned with said slot and bearing hangers extending

through said slot for supporting objects movable through the treatment cage from said entrance to said exit,
a filtering system for removing excess powder from the air used in the coating operation,
a system for supplying powder for electrostatic deposition and compressed air, and
a tank for recovery of powder,
the improvement wherein said cage comprises at least two, side-by-side modules, namely a first module and at least one second module having an end including a said cage end opening, said first module comprising means for storing and recovering powder and further containing means for projecting a mixture of powder and air onto the objects to be processed when within said first module, an opening between said first module and said second module aligned with said side entrance and exit and permitting said objects to be conveyed from said second module to the interior of the first module, and said at least one second module comprising; laterally spaced vertical walls defining a central passageway extending longitudinally over a portion of the length of said at least one second module with said passageway aligned with said entrance opening, air lock means, first filtering means, and a blower for drawing air and excess powder from said first module into said second module, for passage through said first filtering means for filtering excess powder, and for feeding air to said air-lock means to create an air lock at an air pressure in excess of atmospheric adjacent the end of said second module at said cage end opening such that air loaded with powder originating from said first module is prevented from escaping through said cage end opening and is filtered and recycled to said first module for further employment in the projection of powder onto the objects to be processed with said filtered air at a higher pressure than atmospheric so as to flow back through said central passageway towards said first module to prevent powder from escaping through said cage end opening.

4,301,765
APPARATUS FOR GENERATING LAYERS ON A CARRIER FOIL

Reinhard Behn; Hermann Heywang, both of Munich, and Horst Pachonik, Unterhaching, all of Fed. Rep. of Germany, assignors to Siemens Aktiengesellschaft, Berlin & Munich, Fed. Rep. of Germany

Division of Ser. No. 107,828, Dec. 28, 1979. This application Aug. 27, 1980, Ser. No. 181,691

Claims priority, application Fed. Rep. of Germany, Dec. 28, 1979, 2900772

Int. Cl.³ B05C *5/02*

U.S. Cl. 118—718 4 Claims

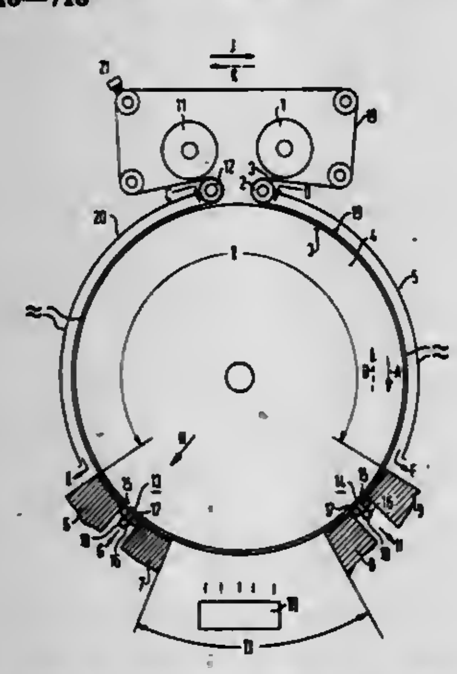

1. Apparatus for applying layers of polymerization layers and metallized layers to a carrier foil (3) comprising a cylinder supported for rotary motion in these directions, a first roll supplying said carrier foil so that it substantially passes around said cylinder, a second roll receiving said carrier foil in a first direction mounted adjacent said cylinder, a first vacuum chamber extending about said drum, a second vacuum chamber extending about said drum with a metallization device mounted therein, first and second polymerization means mounted in said first vacuum chamber so as to apply a polymerization layer to said foil before and after said metallization, a diaphragm system comprising a continuous screening belt traveling with the carrier foil about said cylinder and for generating lateral displacement of said diaphragm, groups (13, 14) of guidance rollers (15–17) are mounted between the metallization device in the second vacuum chamber and the first and second polymerization means in the first vacuum chamber; and control devices which as a function of the rotary direction of the drum, cause a displacement of the guidance rollers (17) of each group that are mounted adjacent the metallization device.

4,301,766
FURNITURE DEVICE FOR CATS

James Piccone, 803 Kathy Dr., Yardley, Pa. 19067

Filed Dec. 13, 1979, Ser. No. 103,263

Int. Cl.³ A01K *1/00, 13/00*

U.S. Cl. 119—1 9 Claims

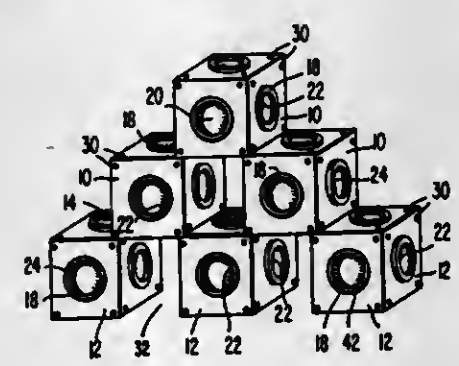

1. A furniture device for cats comprising:
(a) a housing means including a plurality of sides defining an enclosure therewithin, said housing means further defining at least one aperture means located therein;
(b) at least one frame means selectively securable to said aperture means of said housing means, said frame means being annular to define an opening therein;
(c) a grooming means fixedly secured to said frame means and extending radially inwardly from the top and sides of the innermost edge thereof across said opening defined by said frame means to groom the external hair of a cat passing through said apertures defined in said sides of said housing means without contacting its underside;
(d) a detachable securement means located adjacent said aperture means and said frame means to detachably secure said grooming means and said frame means in place within said aperture means, said detachable securement means comprising mated threaded sections on the external periphery of said frame means and on the inner edge of said aperture means; and
(e) detachable connection means positioned in the external surfaces of said sides of said housing means and being adapted to detachably connect to similarly configured housing means to form inter-locking configurations or more than one of said housing means.

4,301,767
HOLDING CLAMP FOR AN AQUARIUM HEATER

Allan H. Willinger, 351 E. 84th St., Apt. 21-E, New York, N.Y. 10028, and Tsuyoshi Itakura, Itakura Soki Kabushiki Kaisha, 17-20, Unoki 3-chome, Ohta-ku, Tokyo, Japan

Filed Mar. 10, 1980, Ser. No. 128,938

Claims priority, application Japan, Mar. 30, 1979, 54-41748[U]

Int. Cl.³ A01K *64/00*

U.S. Cl. 119—5 11 Claims

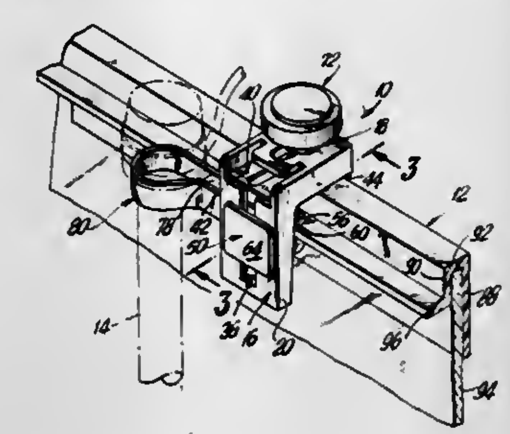

2. A holding clamp for suspending an aquarium heater from the top of an aquarium frame, the aquarium frame including an inwardly directed peripheral lip, the lip being spaced from the top of the frame a different distance for different frames, said holding clamp comprising:
an L-shaped bracket having first and second perpendicular legs;
a first retaining member slidable along said first leg of said bracket, said first retaining member and the second leg of said bracket providing a horizontal throat having an adjustable width for accommodating frames of different width sizes;
a second retaining member slidable along the second leg of said bracket, said second retaining member and the first leg of said bracket providing a vertical throat having an adjustable height for accommodating frames of different height sizes;
said second retaining member including a holding member slidable along an inner surface of said second leg of said bracket, said holding member including slot means for receiving and holding therein the peripheral lip of the frame, said second retaining member including coupling means for mounting said holding member to slide along said second leg of said bracket;
locking means for securing the holding clamp to the aquarium frame with said retaining members being positioned to accommodate the appropriate frame size; and
holding means connected to said bracket for supporting the aquarium heater.

4,301,768
SYSTEM FOR AND METHOD OF FEEDING FOWL

Denis L. Osborn, Glendale, Calif., assignor to H. W. Hart Mfg. Co., Glendale, Calif.

Filed Jul. 19, 1979, Ser. No. 58,817

Int. Cl.³ A01K *39/01*

U.S. Cl. 119—51 R 21 Claims

1. In combination for providing for the introduction of particles of feed to fowl disposed in a series of cages,
a chain disposed in a continuous loop and having at spaced intervals links for advancing the particles of feed along the loop,
a trough shaped to guide the movement of the chain, and particularly the links, at high speeds and to retain the particles of feed advanced by the chain,
means operatively coupled to the chain for advancing the chain at a speed greater than the ability of the fowl to remove the feed from the trough during the movement of the chain, and
means associated with the advancing means for discontinuing the operation of the advancing means after a relatively short, but controlled, period of time to provide a stationary disposition of the particles of feed in adjacent relationship to the cages.

21. A method of providing for the introduction of feed to fowl in a series of cages, including the following steps:
providing in a closed loop a chain link having spaced discs

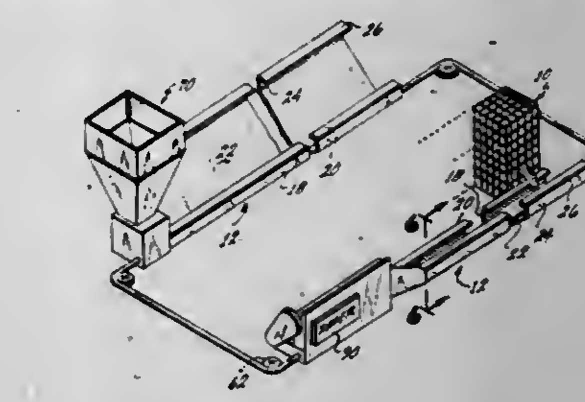

and disposing the chain link in a trough constructed to hold the particles of feed,
advancing the chain link at a sufficiently high speed to prevent the fowl from removing particles of the feed from the space between the spaced discs,
providing for the introduction of the particles of feed at a controlled rate to the chain link during the movement of the chain link at the high speed, and
interrupting the movement of the chain link after a particular time interval to present the particles of feed in the trough to the fowl in the cages for feeding.

4,301,769
POULTRY LOADING APPARATUS

Giuseppe Mola, Castelmella, Italy, assignor to G.M.G. System S.p.A., Roncadelle, Italy

Filed Aug. 6, 1980, Ser. No. 175,812

Claims priority, application Italy, Aug. 13, 1979, 5209 A/79

Int. Cl.³ A01K *29/00*

U.S. Cl. 119—82 11 Claims

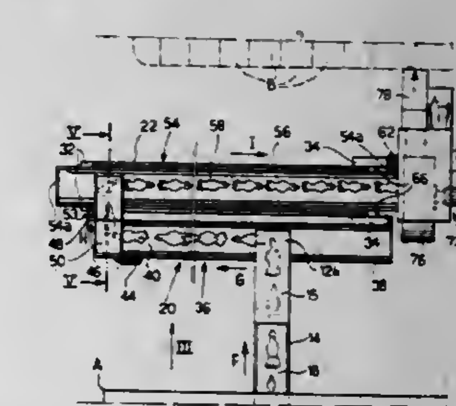

1. Apparatus for loading poultry from a rearing house to a series of housings disposed in vertical rows alongside the outside of the rearing house, said apparatus comprising:
(a) a continuous-belt elevator conveyor having a loading end located in correspondence with an exit from said rearing house and a discharge end projecting from the rearing house,
(b) an assembly enclosure having convergent walls disposed within the rearing house and arranged to guide the poultry towards the loading end of the said elevator conveyor,
(c) a vehicle movable transversely of said elevator conveyor and having a support structure carrying:
a first horizontal continuous-belt conveyor directed parallel to the longitudinal axis of the vehicle and arranged to

receive poultry from the discharge end of the said elevator conveyor,

an adjustable-inclination, continuous-belt conveyor disposed alongside the said first horizontal conveyor and having a transport direction opposite to that of the said first horizontal conveyor, the input end of said adjustable-inclination conveyor being articulated in a position substantially corresponding to the exit end of the said first horizontal conveyor,

a second horizontal continuous-belt conveyor directed transversely to the longitudinal axis of the vehicle and arranged to transfer poultry from the exit end of the first horizontal conveyor to the input end of the said adjustable-inclination conveyor,

a pneumatic force-delivery unit associated with the exit end of the adjustable-inclination conveyor and including an outlet duct structure defining an outlet duct which is directed transversely to the longitudinal axis of the vehicle and has an outlet mouth facing away from said elevator conveyor, said forced-delivery unit being operative to generate directed air flow for urging poultry along said outlet duct, and

means for vertically displacing the exit end of the adjustable-inclination conveyor and the outlet duct structure of the said pneumatic unit in dependence on the vertical position of the said housings intended to receive the poultry.

4,301,770
METHOD FOR SHACKLING LIVE POULTRY
Alonzo E. Parker, Jr., 1031 S. Plum St., Durham, N.C. 27701
Division of Ser. No. 912,726, Jun. 5, 1978, Pat. No. 4,215,654. This application Apr. 21, 1980, Ser. No. 142,084
Int. Cl.³ A01K *37/00*
U.S. Cl. 119—97 R **11 Claims**

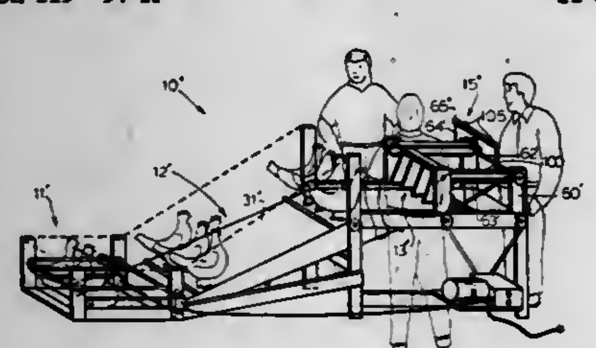

1. The method of shackling uncaged live poultry on foot preparatory to processing and of handling and processing the same after being shackled, comprising the steps:

(a) directing the live fowl on foot towards an elongated shackle structure releasably fixed at a shackling station across the path along which the fowl are directed and having releasable laterally spaced limb securing means oriented to receive the limbs of the fowl from the direction in which they are directed and operative to releasably secure laterally spaced paired limb portions of the fowl on foot in a side-by-side array;

(b) loading the shackle structure with a plurality of the fowl on foot and releasably secured in such side-by-side array by moving the fowl into and relative to the structure;

(c) removing the loaded shackle structure from said shackling station and transporting such loaded structure to a processing conveyor at a processing plant; and

(d) releasably mounting the loaded shackle structure on the conveyor and processing the fowl thereon while said conveyor moves the structure during processing.

4,301,771
FLUIDIZED BED HEAT EXCHANGER WITH WATER COOLED AIR DISTRIBUTOR AND DUST HOPPER
Walfred W. Jukkola, Westport, Conn.; Albert M. Leon, Mamaroneck, N.Y.; Garritt C. Van Dyk, Jr., Bethel, Conn.; Daniel E. McCoy, Williamsport, Pa.; Barry L. Fisher, Montgomery, Pa.; Timothy L. Salera, Williamsport, Pa., and Marlin E. Karstetter, Loganton, Pa., assignors to Dorr-Oliver Incorporated, Stamford, Conn.
Filed Jul. 2, 1980, Ser. No. 165,352
Int. Cl.³ F22B *1/02*
U.S. Cl. 122—4 D **10 Claims**

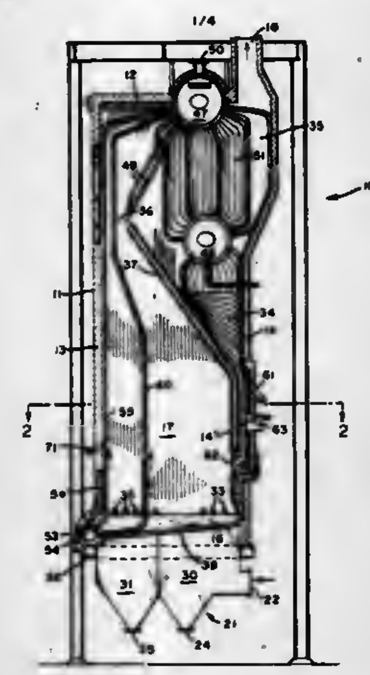

1. A fluidized bed heat exchanger comprising a housing, a reaction chamber within the housing, means for introducing air into said reaction chamber including a windbox region below said reaction chamber and an air distributor therebetween, an integral water-cooled floor and bridgewall assembly in said housing, a convection heat exchange chamber above said reaction chamber within said housing and separated from said reaction chamber by a slanted baffle, said baffle defining a gas passageway between said reaction chamber and said convection heat exchange chamber and having a hopper portion whereby dust is collected and removed from gases passing through said convection heat exchange chamber, means for establishing a bed of particulate material containing fuel in said reaction chamber, said bed of particulate material being subject to fluidization by air passing into said reaction chamber from said windbox region through said air distributor, a steam drum in said convection heat exchange chamber, an array of tubes each connected at one end to said steam drum and passing through said reaction chamber and into and through said air distributor to connect with a header, said array of tubes having a vertical orientation in that portion of the reaction chamber occupied by said fluidized bed of particulate material, the walls of said housing in the region of said reaction chamber being water-cooled, said integral water-cooled floor and bridgewall assembly formed to provide said air distributor, one of said housing walls, and said baffle, valve controlled conduit means within said housing and extending from said hopper portion of said baffle to a discharge port opening into said reaction chamber below the upper surface of said fluidized bed.

4,301,772
WATER HEATING APPARATUS
John P. Eising, Oconomowoc, Wis., assignor to A. O. Smith Corporation, Milwaukee, Wis.
Filed Jun. 2, 1980, Ser. No. 155,388
Int. Cl.³ F22B *5/00*
U.S. Cl. 122—17 **3 Claims**

1. A heating apparatus comprising:

a. a tank to contain liquid to be heated;

b. a casing disposed within said tank and defining a combustion zone;

c. combustion means disposed within said casing;

d. a flue connected to said casing to evacuate combustion gases from said tank;

e. a first baffle member disposed within said casing and defining a pair of longitudinal passageways in said casing; and

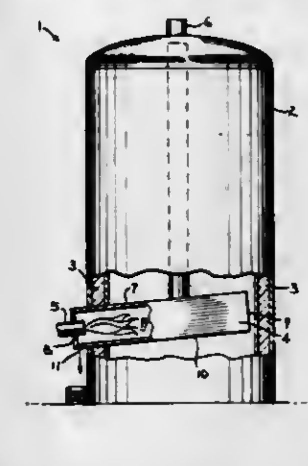

f. a second baffle member connected to said first baffle member and defining with the upper portion of said casing an upper passageway in said casing, said upper passageway communicating with said flue and with said longitudinal passageways, said upper passageway having a cross-sectional area less than the cross-sectional area of said longitudinal passageways.

4,301,773
HYDRODYNAMIC INDUCED DRAFT AND WATER COOLED FLUE GAS HOT WATER HEATER
Arthur W. Johnson, 105 W. Janss Rd., Thousand Oaks, Calif. 91360
Filed Oct. 25, 1979, Ser. No. 88,030
Int. Cl.³ F22B *1/02*
U.S. Cl. 122—31 A **9 Claims**

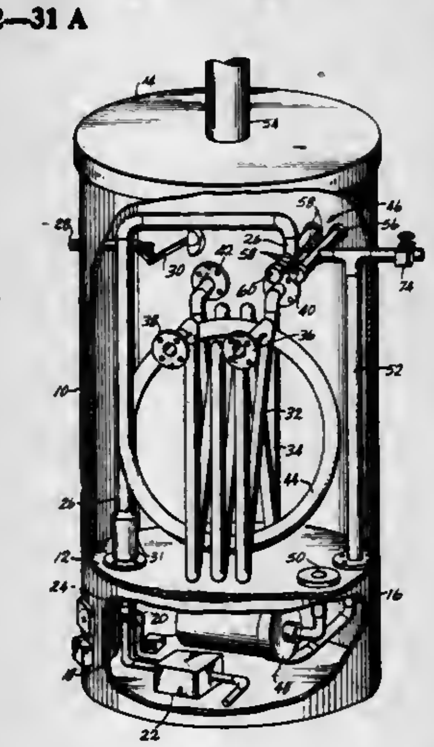

1. A gas-fired water heater comprising a tank adapted to hold a volume of liquid, a heat exchanging coil positioned in the tank having external inlet and outlet connections for conducting a fluid through the tank, a burner, a flue pipe for receiving the flue gases from the burner, the flue pipe extending into the tank, a fluid jet pump in the tank connected to the flue pipe for pumping the flue gases from the burner, the jet pump having an outlet for releasing the flue gases within the tank, and auxiliary pump means having an intake connected to the tank and an outlet connected to the jet pump for circulating the liquid in the tank through the jet pump to pump the flue gases and mix the flue gases with the liquid in the tank, and means for venting the flue gases from the top of the tank.

4,301,774
GUNPOWDER FUELED INTERNAL COMBUSTION ENGINE
Samuel D. Williams, 127 W. 82nd St., Apt. 3A, New York, N.Y. 10024
Filed Oct. 15, 1979, Ser. No. 84,903
Int. Cl.³ F02B *45/06*
U.S. Cl. 123—23 **4 Claims**

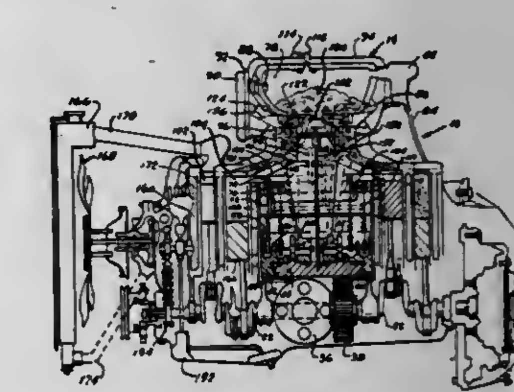

1. A gunpowder fueled internal combustion engine, comprising:

a cylinder block;

a plurality of cylinders arranged in the cylinder block;

an upper housing on the cylinder block;

a storage chamber located in the upper housing for storing gunpowder;

an air intake system in said upper housing;

a metering system for sequentially directing controlled amounts of gunpowder and air from said upper housing to each cylinder, wherein the gunpowder and air mixture can be burned;

crank shaft means in said cylinder block;

a corresponding piston reciprocatingly associated with each cylinder and drivingly coupled to said crank shaft means;

said metering system comprising a series of gunpowder chutes having their mouths arcuately spaced apart about the lower portion of said storage chamber for receiving gunpowder therein from said storage chamber, a butterfly throttle valve positioned downstream along each of said chutes for controlling the amount of gunpowder passing along the chutes, a drum positioned transversely across each chute downstream of the throttle valve, a helical groove formed about each drum, each of said drums being driven by a crank arm extending from a cam shaft which is in turn driven by said crank shaft means, and a gunpowder injection means located further downstream along each chute and adjacent each cylinder for forcing a controlled amount of gunpowder into its respective cylinder, said gunpowder injection means also being driven by said crank arm.

4,301,775
MANIFOLDS FOR INTERNAL COMBUSTION ENGINES
Charles A. Smart, Hornchurch, and Robert A. Shackleton, Rayleigh, both of England, assignors to Ford Motor Company, Dearborn, Mich.
Filed May 25, 1979, Ser. No. 42,673
Claims priority, application United Kingdom, May 30, 1978, 24518/78
Int. Cl.³ F02B *29/00*
U.S. Cl. 123—52 M **7 Claims**

1. A manifold for an internal combustion engine comprising:

a first body part formed as an integral casting having a mounting flange for the manifold;

a plurality of open channels communicating with respective apertures in the mounting flange and a water chamber

communicating with a part in the flange and a further port in the first body part;

a second body part formed as an integral casting overlying the channels such that the first and second body parts define a plurality of gas conduits effecting communication between the apertures and a common orifice formed through at least one of the body parts;

a seal formed by the first and second parts being sealed together along opposed side faces adjacent their outer peripheral edges;

the second body part defining an aperture which surrounds said further port in the first body part, a second seal being

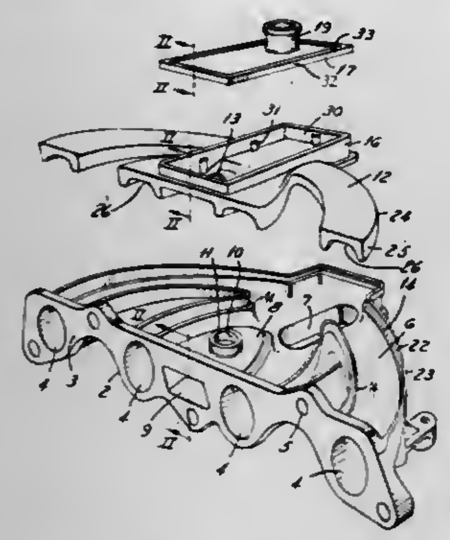

formed by the second body part being sealed to the first body part along side faces the adjacent edges of the aperture and the further port;

a third body part which coacts with said second body part with said coaction defining a second water chamber effecting communication between the aperture in the second body part and an opening defined in the third body part, the third body part having a side face adjacent its outer peripheral edge which faces a complementary side face of said second body part; the seal is formed by the third said side face of said third body part being sealed to said side surface of said second body part.

4,301,776

CRANKSHAFT APPARATUS

Joseph W. Fleming, 8381 Post Rd., Allison Park, Pa. 15101

Continuation-in-part of Ser. No. 45,021, Jun. 4, 1979, abandoned. This application Feb. 28, 1980, Ser. No. 125,407

Int. Cl.^{3} F02B *75/32*

U.S. Cl. 123—197 AC **7 Claims**

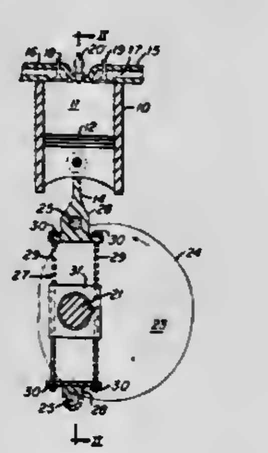

1. A crankshaft apparatus in an internal combustion engine or a compressor havng a piston arranged to reciprocate within a cylinder to act on a fluid medium within a chamber at one end of the piston, said crankshaft apparatus including the combination of:

a shaft member carried by bearing supports for rotation about an axis perpendicular to reciprocation of said piston the cylinder at the end thereof opposite said chamber,

a cam plate defining a cam surface secnred to said shaft member for rotation thereof,

two equal diameter follower rollers engaging said cam surface at diametrically-opposite points to rotate said cam, and

means supporting said follower rollers to maintain the axes of the follower rollers generally parallel with the rotational axis of said shaft member while interconnecting said rollers with said piston, each rotational axis of the follower rollers being spaced by said cam surface from the rotational axis of said shaft member according to the polar equation:

$$R=r+\tfrac{1}{2}S\sin(\theta)+\tfrac{1}{2}S'\sin 3(\theta+a)+\tfrac{1}{2}S''\sin 5(\theta+b)+\tfrac{1}{2}S'''\sin 9(\theta+c)+\tfrac{1}{2}S''''\sin 15(\theta+d)+\tfrac{1}{2}S'''''\sin 45(\theta+e)$$

where:

R is the radial distance between the rotational axis of the shaft member and a follower member at angle θ,

r is the average displacement radius of the axis of the follower roller,

S, S′, S″, S‴, S″″ and S‴″ are radial variations in the same surface with S not equal to zero and having the greatest absolute value,

a, b, c, d and e are fixed phase angles with any value of ± from 0° to 180°, and

θ is the angular displacement of a reference mark on the cam to the center line of reciprocating motion of the follower rollers.

4,301,777

FUEL INJECTION PUMP

Richard G. Grundman, and Richard S. Knape, both of Grand Rapids, Mich., assignors to General Motors Corporation, Detroit, Mich.

Filed Nov. 28, 1979, Ser. No. 98,079

Int. Cl.^{3} F02D *7/00*

U.S. Cl. 123—379 **4 Claims**

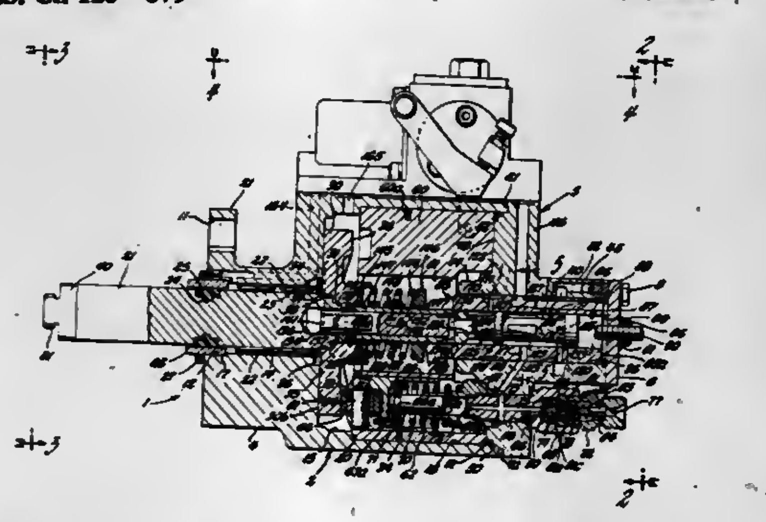

4. An engine driven fuel pump for a multicylinder diesel engine of the type therein an array of individual cylinder injection pumps surround a central bore and wherein a landed control valve, slidable in the bore, rotates in unison with engine rotations to control flow in passages connecting the bore to the injection pumps and wherein a cam rotates therewith to actuate the individual injection pumps in sequence for engine operation; characterized in that said cam has both a pump lobe and a governor lobe thereon whereby each of said individual injection pumps, each of which includes a plunger, is actuated by said cam in a pumping stroke and thereafter in a governor supply stroke; said landed control valve having control lands thereon adapted to cooperate with the passages communicating with each of said injection pumps so as to control fuel flow to an associated individual cylinder of the engine during the

pumping stroke and to direct fuel to the governor supply during the governor supply stroke,

the mechanism further including means communicating the pressure in the governor fluid supply to said landed control valve so as to vary its axial position in accordance with such pressure and thereby vary the amount of fuel delivered to each individual cylinder,

the governor fluid supply system being so constructed and arranged that the pressure in the governor supply varies in response to the volume of fluid supplied to it, whereby the quantity of fuel supplied to the individual cylinders is positively controlled in response to engine speed.

4,301,778

ELECTRONIC IGNITION DEVICE

Jean-Francois Lataple, Roquettes, France, assignor to Equipements Automobiles Marchal, Issy-les-Moulineaux, France

Filed Dec. 31, 1979, Ser. No. 108,781

Claims priority, application France, Jan. 12, 1979, 79 00749

Int. Cl.^{3} F02P *5/04*

U.S. Cl. 123—426 **9 Claims**

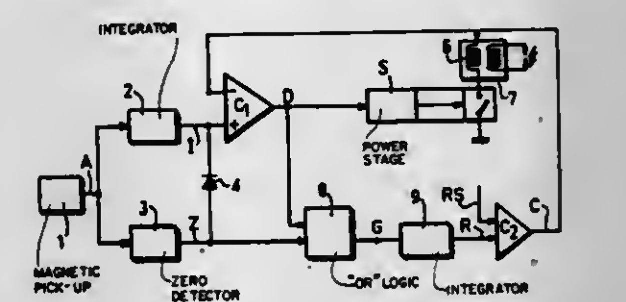

1. In an ignition device for use, in particular with the internal combustion engines of motor vehicles and comprising at least one ignition coil switch and a magnetic pick-up which produces a periodical alternating signal A and is associated with an integrator circuit which possesses said alternating signal, the output signal I of said integrator circuit being fed to an input of a comparator C_1 the other input of which receives a signal defining a threshold, and the output of said comparator being used to actuate the ignition coil switch: the improvement comprising:

a logic circuit combining the signal Z furnished by a zero detector indicating that said signal A from said pick-up has reached a value of approximately zero with the output signal of said comparator, the output from said logic circuit being passed to an integrator to provide a signal R which constitutes a measure of the actual ignition displacement achieved, the result of the comparison of the signal R with a signal RS which represents the required ignition displacement causing said switch to be actuated.

4,301,779

ENGINE FUEL MIXTURE CONTROL SYSTEM

Arthur G. Hufton, Mobile, Ala., assignor to Teledyne Industries, Inc., Los Angeles, Calif.

Filed Feb. 21, 1979, Ser. No. 13,460

Int. Cl.^{3} F02B *3/00*

U.S. Cl. 123—478 **9 Claims**

9. In an internal combustion engine having a fuel supply connected to said engine by a fuel line, a valve means connected in said fuel line for regulating the fuel flow to said engine, and an air intake means, said air mixing with said fuel to provide a combustible charge for the engine, fuel mixture control system comprises:

a fuel flow meter connected in said fuel line, said fuel flow meter providing an output signal representative of the fluid flow rate through the fuel line;

an air flow meter connected to the air intake means, said air flow meter providing an output signal representative of the air flow rate into the engine;

proportioning means connected to the outputs from said flow meters for providing an output signal representative to the fuel/air ratio for the engine;

a reference fuel/air ratio means for providing an output signal representative of the optimum engine fuel/air ratio for a given engine condition;

means for comparing said reference means output with said proportioning means output and producing an output signal representative of the difference therebetween; and

means responsive to said comparing means output signal for controlling said fuel valve means so that said proportioning means output attains said reference output;

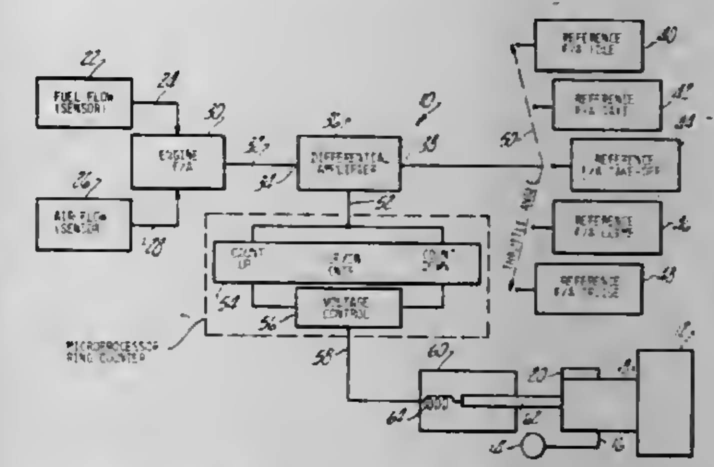

wherein said engine includes a throttle means movable between a plurality of operating positions, each throttle position being representative of one or more distinct engine conditions, said reference means further comprising a plurality of reference value wherein each reference value is a signal representative of the optimum engine fuel/air ratio for one distinct engine condition, and switch means connected to said throttle means for selectively electrically connecting only one of said reference values to said comparing means at each operating position of said throttle means.

4,301,780

FUEL INJECTION CONTROL APPARATUS FOR INTERNAL COMBUSTION ENGINE

Yoshikazu Hoshi, Ibaraki, Japan, assignor to Hitachi, Ltd., Tokyo, Japan

Filed Jul. 10, 1979, Ser. No. 56,427

Claims priority, application Japan, Jul. 21, 1978, 53-88442

Int. Cl.^{3} F02M *52/00;* **F02D** *5/02;* **F02B** *33/00, 3/00*

U.S. Cl. 123—486 **20 Claims**

1. A fuel supply control apparatus for use in a multicylinder internal combustion engine having a single fuel injection valve for supplying fuel to all the cylinders, comprising:

first means for generating, for each respective cylinder, a respective reference signal in response to the fuel intake stroke for that respective cylinder;

second means for generating control signals for operating said fuel injection valve in response to said reference signals generated by said first means for every respective cylinder; and

third means for controlling the starting time of said control signals for operating said fuel injection valve so as to supply fuel to each cylinder in accordance with the char-

acteristics of the fuel supply path from said fuel injection valve to each cylinder,

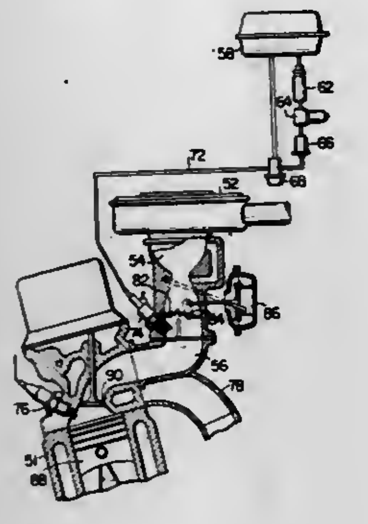

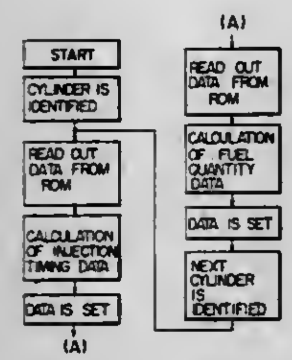

whereby a uniform distribution of fuel is achieved among the respective cylinders.

4,301,781
METHOD AND APPARATUS FOR IMPROVING ENGINE OPERATION AND REDUCING HYDROCARBONS EMISSIONS THEREFROM BY COOLING THE FUEL SUPPLIED TO OR IN THE CARBURETOR

John E. Lindberg, 1306 Sanderling Island, Point Richmond, Calif. 94801

Filed Jul. 18, 1979, Ser. No. 58,535
Int. Cl.³ F02M *31/20*
U.S. Cl. 123—541 7 Claims

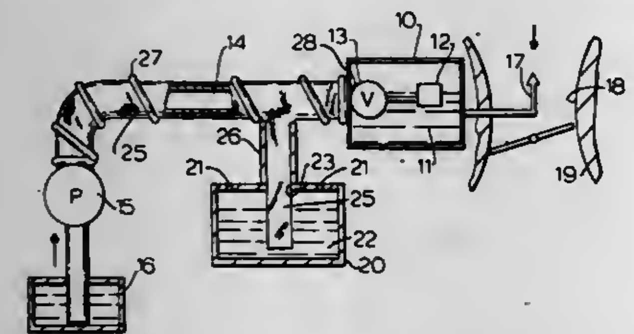

1. A method for improving the operation of an internal-combustion engine and reducing hydrocarbons emissions therefrom, said engine having fuel-metering means to which an excessive amount of heat is transmitted from the engine, partly via an intake manifold so that the fuel tends to boil in the fuel-metering means and thereby to change the fuel-air ratio to which the fuel-metering means is set, the engine also having a fuel line and a fuel pump connecting the fuel-metering means to a fuel supply tank, the fuel line comprising a metal tube having walls providing an inner passage and an outside surface, comprising:

cooling the fuel during its passage from the fuel supply tank to the fuel-metering means by

wicking water from a reservoir of water spaced away from said fuel line

distributing the wicked water along and in contact with the outside surface of the fuel line, and

evaporating the water along the outside surface of the fuel line, thereby drawing heat from the fuel through the walls of the fuel line so that the fuel enters the fuel-metering means at a temperature substantially below the ambient temperature at the fuel metering means.

4,301,782
IGNITION SYSTEM

Basil E. Wainwright, 80 Greenaleigh Rd., Yardley Wood, Birmingham, England

Continuation-in-part of Ser. No. 944,142, Sep. 20, 1978, abandoned. This application Jun. 13, 1979, Ser. No. 48,253
Claims priority, application United Kingdom, Sep. 21, 1977, 39393/77; Jun. 4, 1979, 19431/79
Int. Cl.³ F02P *15/00*
U.S. Cl. 123—620 10 Claims

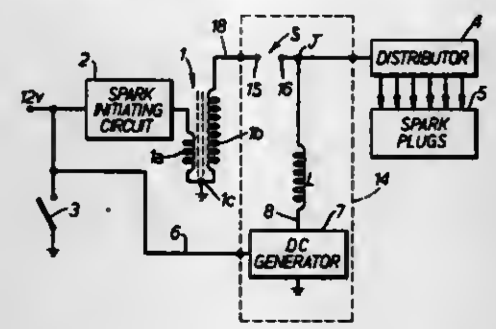

1. Apparatus adapted for use with an internal combustion engine including a spark ignition system having a relatively low voltage source and spark pulse generating means (2) for supplying to a spark plug (5) via a given path (18) electrical pulses of a magnitude to initiate spark ignition across a spark plug, comprising

(a) d-c to d-c converter means (7) for producing from said relatively low voltage source a relatively high voltage current for sustaining the spark initiated by one of said pulses; and

(b) voltage isolating means for independently connecting the spark pulse generating means and said converter means with said spark plug, respectively, said isolating means including

(1) first means (S) connected in series in said given path for connecting the spark pulse generating means with the spark plug; and

(2) means including a series-connected inductor (L) for connecting said converter means with said given path at a junction (J) between said first means and the spark plug, whereby said first means isolates the converter means from the pulse generating means, and the inductor isolates the converter means from the pulses from the spark pulse generator means.

4,301,783
THREE WALL FORCED AIR HEATING UNIT

Carrol E. Buckner; C. Glenn Cook, both of Weaverville, and Thomas J. Kane, Asheville, all of N.C., assignors to Cebu Corporation, Asheville, N.C.

Filed Jan. 4, 1979, Ser. No. 950
Int. Cl.³ F24C *1/14*; F24D *1/00*
U.S. Cl. 126—63 18 Claims

1. A forced air solid fuel heating unit comprising:

a bottom wall;

a top wall;

first means mounted between said bottom and top walls forming a back and two side walls;

a second means between said bottom and top walls interior said first means forming a back and two side walls and

defining a first channel between said first and second means;

third means between said bottom and top wall interior said second means forming a back and two side walls and defining a second channel between said second and third means;

fourth means between said bottom and top walls forming a front wall across the side walls of said first, second and third means;

a firebox interior of said back and two side walls of said third means and an access opening in said fourth means to said firebox;

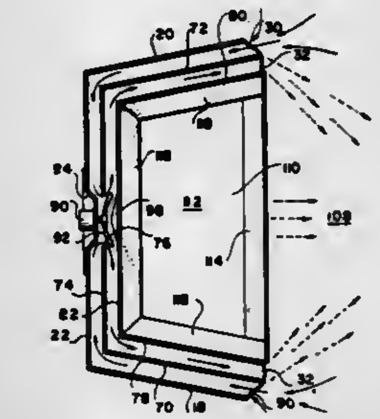

said back and two side walls of said first means also constituting said back and side walls of said solid fuel heating unit, said back and two side walls being spaced from said firebox by said first and second channels;

air inlet means in said fourth means between said first and second means;

air outlet means in said fourth means between said second and third means;

fifth means in said rear wall of said second means for pneumatically interconnecting said first and second channels; and

forced air means for forcing air in through said air inlet means into said first channel, through said fifth means into said second channel and out through said air outlet means.

4,301,784
FIREPLACE INSERT

C. Ray Dinwiddie, P.O. Box 1729, Olympia, Wash. 98507

Continuation-in-part of Ser. No. 60,791, Jul. 25, 1979, abandoned. This application Jul. 23, 1980, Ser. No. 171,474
Int. Cl.³ F24B *7/00*
U.S. Cl. 126—131 23 Claims

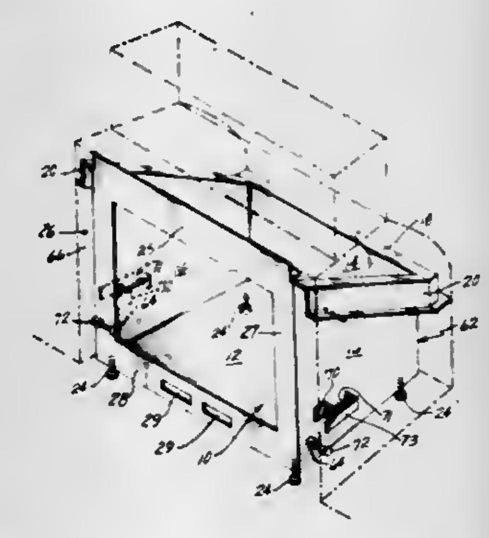

1. An apparatus for improving the thermal efficiency of an existing fireplace comprising:

(a) a convection chamber having an open front and top, a bottom, a rear wall, and a plurality of side walls, said convection chamber being insertable into a fireplace and spaced apart from the bottom, rear wall, and side walls of the fireplace to cooperatively form air chambers therebetween for drawing room air to be heated under and behind said convection chamber, heating the room air as it passes through said bottom, rear and side air chamber, and discharging heated air into a room from the air side chambers defined by the fireplace side walls and said convection chamber side walls;

(b) rear wall sealing means disposed along the top edge of and extending rearwardly from said convection chamber rear wall, said rear wall sealing means engaging said fireplace rear wall to prevent air conveyed from said room to be heated from passing therearound;

(c) side wall sealing means extending outwardly from the upper edge portion of each of said convection chamber side walls, said side wall sealing means engaging said fireplace side walls to prevent heated air from passing thereearound.

4,301,785
ADJUSTABLE FLUE CONTROL FOR FURNACES

Nat Levenberg, 2 Windsor Pl., Lynbrook, N.Y. 11563

Filed Apr. 28, 1980, Ser. No. 144,595
Int. Cl.³ F23L *3/00*
U.S. Cl. 126—292 2 Claims

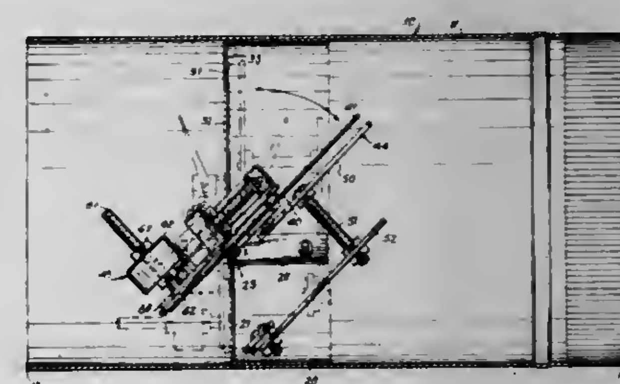

1. In a furnace flue damper construction, including a length of flue pipe, an orificed plate positioned transversely with respect to the principal axis of said pipe, and a butterfly type valve member pivotally mounted with respect to said orificed plate to selectively close an orifice therein, the improvement comprising: first, second and third weight elements mounted upon and pivoting with said valve member; said first weight member being mounted upon a first side of said valve member, and having means for adjustment laterally with respect to the plane of said valve member; said second weight member being mounted on a second side of said valve member and having means for adjustment in a plane parallel to the plane of said valve member; said third weight member including a bracket mounted upon said first side of said valve member, said bracket member rotatably mounting an elongated threaded member having a free end thereof having tool engaging means thereon, said flue pipe having an opening therein for access to said free end when said valve member is in predetermined position relative to said pipe, and weight means threadably engaged upon said threaded member for movement there along with rotation of said threaded member in a plane parallel to the plane of said valve member, said last mentioned weight being shiftable across the pivotal axis of said valve member.

4,301,786
SOLAR COLLECTOR
Hermann Kirchmayer, Gabelsbergerstr. 77, D 8000 Munich 2, Fed. Rep. of Germany
Filed Sep. 5, 1980, Ser. No. 184,217
Claims priority, application Fed. Rep. of Germany, Sep. 5, 1979, 2935900
Int. Cl.³ F24J *3/02*
U.S. Cl. 126—417 **6 Claims**

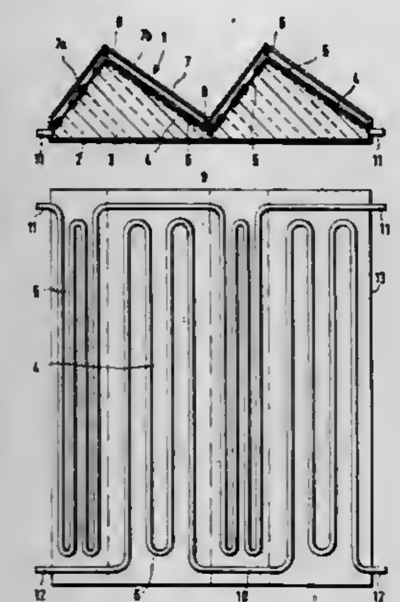

1. A solar collector for converting solar energy into heat, comprised of a multiplicity of collector elements which can be mounted on the outside of a building, which can be coupled to each other, and which can be connected to a heat transfer fluid system, each of said elements comprising a heat absorber with a channel in which a heat-carrying fluid circulates and a transparent cover which comprises two inclined surfaces at approximately a right angle to each other, with each of the two surfaces forming an acute angle with the base; characterized in that one of the two surfaces forms a steep angle with the base, on the order of about 60°, and the other of the two surfaces forms a shallow angle on the order of about 30°, with the base; and in that each of the two inclined surfaces is provided with its respective heat absorber having an identical inclination, and is provided with a channel; and further in that the channels of the two heat absorbers have mutually independent inlet and outlet tubes which are connectable to the heat transfer fluid system in a fashion depending on the given local installation of the collector.

4,301,787
SOLAR HEAT COLLECTOR
Frederick H. Rice, Van Nuys, Calif., assignor to Fred Rice Productions, Inc., Van Nuys, Calif.
Filed Aug. 29, 1975, Ser. No. 608,962
The portion of the term of this patent subsequent to Apr. 24, 1996, has been disclaimed.
Int. Cl.³ F24J *3/02*
U.S. Cl. 126—429 **12 Claims**

1. A solar heat collector adapted to be disposed across an open window area in an enclosure, said collector comprising a transparent walled heat insulating chamber having an air inlet and air outlet therein for communicating said chamber with the interior of said enclosure; a layer of heat reflecting material disposed on a wall of said chamber to reduce heat loss therethrough; a plurality of fins transversely disposed within said chamber, each of said fins defining a heat reflective surface on one side thereof and having an energy absorbing material on the other side thereof and means for collectively varying the angular orientation of said fins within said enclosure such that either the reflective or absorbent sides of said fins can be collectively directed toward the sun at a selected and variable

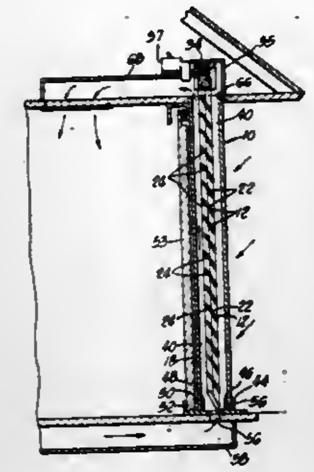

angle thereby regulating the warm air flow from said chamber to said enclosure through said air outlet.

4,301,788
SOLAR WATER RECLAMATION SYSTEM
Steven L. Hummel, 2403 N. Corona, Colorado Springs, Colo. 80907
Continuation-in-part of Ser. No. 967,417, Dec. 7, 1978. This application Jun. 25, 1979, Ser. No. 51,832
Int. Cl.³ F24J *3/02*
U.S. Cl. 126—435 **10 Claims**

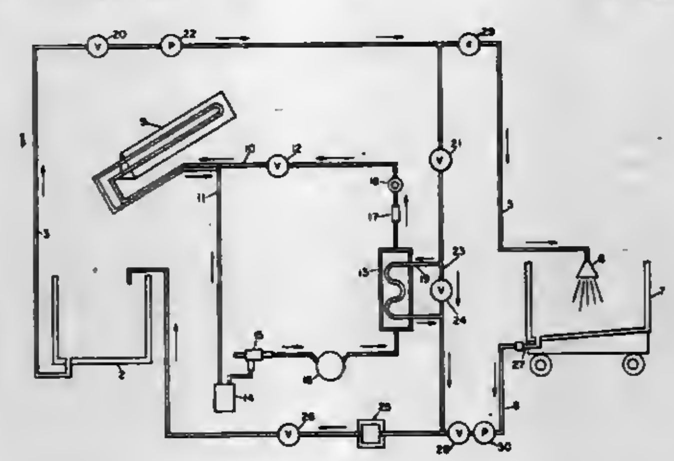

1. A system for reclaiming the waste water contained in ice shavings, said system including
a first storage means in which ice shavings can be deposited,
a second storage means in which waste water can be stored,
a first conduit means for passing the waste water from the melted ice shavings in said first storage means to said second storage means,
a spraying means positioned adjacent the ice shavings in said first storage means,
a second conduit means for conveying waste water from said second storage means to said spraying means to be discharged into contact with the ice shavings,
a closed heating system which includes an external solar heat exchanger and an internal heat exchanger, and
a third conduit means connected between said second conduit means and said first conduit means, said third conduit means including a portion which passes through said internal heat exchanger to thereby heat the waste water passing through said third conduit means and thus heat the waste water passing to said second storage means.

9. A method for reclaiming the waste water contained in ice shavings, said method comprising
depositing ice shavings in a first storage means,
circulating the waste water via a first conduit means from the melted ice shavings in said first storage means to a second storage means,
circulating the waste water via a second conduit means from said second storage means to a spraying means located adjacent the ice shavings in said first storage means so as to be discharged into contact with said ice shavings and to help melt the same,
circulating waste water via a third conduit means from said second conduit means to said first conduit means, and
heating the waste water passing through said third conduit means via a solar heating means.

4,301,789
ENERGY CONVERSION APPARATUS
Wolfgang Artweger, Windischgarsten 36, Austria (A-4580)
Division of Ser. No. 823,497, Aug. 10, 1977, Pat. No. 4,210,122. This application Jul. 27, 1979, Ser. No. 61,467
Claims priority, application Austria, Aug. 11, 1976, 5983/76
Int. Cl.³ F24J *3/02*
U.S. Cl. 126—439 **7 Claims**

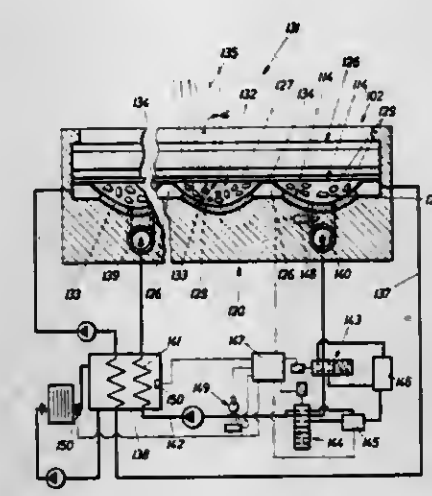

1. An energy conversion unit for converting solar into thermal energy, which comprises
(a) a rear plate having an inner surface,
(b) a light, radiation reflecting layer on the inner surface of the rear plate,
(c) a transparent front plate comprised of two walls defining a space therebetween,
(1) one of the front plate walls having an outer surface arranged for exposure to solar radiation,
(2) the other front plate wall having an inner surface, and
(3) the inner surfaces of the rear plate and the other front plate wall facing each other and defining a cavity therebetween,
(d) a source of solar radiation reflecting liquid,
(e) a conduit leading into the space between the two front plate walls,
(f) a thermostat-controlled pump in the conduit for moving the liquid into the space under the control of the thermostat,
(g) a heat carrier liquid arranged in the cavity for flowing therethrough, and
(h) a radiation reflecting element associated with the front plate and consisting of a synthetic resin film capable of transmitting the solar radiation to the heat carrier liquid and of reflecting the radiation from the light, radiation reflecting layer,
(1) the heat carrier liquid absorbing the radiation reflected by the light, radiation reflecting layer and the radiation reflecting synthetic resin film reflecting radiation from the carrier liquid back to the carrier liquid.

4,301,790
ENDOSCOPE WITH ELECTRIC IMAGE TRANSMISSION
Johannes Bol, Heppenheim; Meinhard Classen; Rainer Günther, both of Frankfurt; Bernhard Hugemann, Hamburg, and Uwe Scheiding, Hofheim-Lorsbach, all of Fed. Rep. of Germany, assignors to Siemens Aktiengesellschaft, Berlin & Munich, Fed. Rep. of Germany
Filed Jul. 16, 1979, Ser. No. 57,713
Claims priority, application Fed. Rep. of Germany, Aug. 11, 1978, 2835331
Int. Cl.³ A61B *1/06*
U.S. Cl. 128—6 **11 Claims**

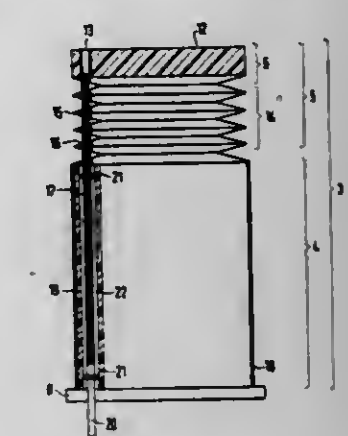

1. An endoscope with electric image transmission, comprising: a head (1) with an installed camera, a mobile tube section (3) comprising a pivotal section (5) and a passively flexible section (4), a control device (8) and an image display device (11), the head (1) being connected in a plug-in fashion in said pivotal section (5) of the mobile tube section (3), and force transmitting cables (17) mechanically coupling said pivotal section (5) with said control device (8) for controlling the mobility of the pivotal section (5) of the tube section (3) and thereby effecting pivotal movement of said head (1), and said cables (17) being formed of electrical transmission means (25-28) capable of transmitting electrical energy as well as mechanical forces, and providing electrical coupling via said electrical transmission means (25-28) between said camera and said image dislay device (11), and said cables (17) comprising heat transmission means (27, 28) in heat transfer coupling with said head (1) via said pivotal section (5) for accommodating a carrying-off of dissipated heat from said head (1) to said cables (17), and a drawover seal (7) sealing the transition from the tube section (3) to the head (1).

4,301,791
BODY TRANSFER UNIT
Adolph S. Franco, III, 33 Woodland Dr., Waterford, Conn. 06385
Filed Feb. 19, 1980, Ser. No. 122,671
Int. Cl.³ A61F *5/01, 5/37, 13/00*
U.S. Cl. 128—89 R **10 Claims**

1. A body transfer device comprising:
(A) a first support member adapted to receive and envelop the entire backside of a user's body, said first support member being inflatable and comprising:
(1) an outer shell portion including a substantially planar undersurface, a head end, a foot end, and side portions;
(2) an inner shell portion integral with and generally coextensive with said outer shell portion and having a first interior surface including a body receiving portion contoured generally to receive the user's body and having depressions to accommodate, respectively, the head and neck, shoulders, arms, torso, legs, and feet of the user, said outer shell portion and said inner shell portion being of unitary construction and defining an airtight cavity therebetween;
(3) spacer means within the cavity extending between said outer shell portion and said inner shell portion for providing said inner shell portion with a three-dimensional pro-

file defining the depressions to accommodate the user's body when said first support member is inflated; and

(B) a second support member adapted to overlie said first support member and substantially envelop the entire front side of the user's body when placed in said body transfer device, said second support member being inflatable and generally contiguous and coextensive with said first support member and comprising:

(1) an outer shell portion including a generally rounded upper surface, a head end, a foot end, and side portions;

(2) an inner shell portion integral with and generally coextensive with said outer shell portion and having a second interior surface which defines a body receiving portion contoured generally to conform to the front side of the user's body, said outer shell portion and said inner shell portion being of unitary construction and defining an airtight cavity therebetween;

(3) a face receiving portion adjacent to said head end comprising a continuous surface integral with said outer shell portion and said inner shell portion and extending from said upper surface to said interior surface, said face receiving portion adapted to receive the head of the user therein in a contiguous relationship;

(4) spacer means within the cavity extending between said outer shell portion and said inner shell portion for providing said inner shell portion with a three-dimensional profile to accommodate the user's body when said second support member is inflated; and

(C) principal closure means associated with said first and second support members including first and second band members integral, respectively, with said first and second support members, each of said band members having a generally continuous flap portion extending beyond the outer periphery of its said respective support member, said band members being positioned in a contiguous relationship when said second support member overlies said first support member in a generally contiguous and coextensive relationship, and fastener means for releasably joining said flap portions of said first and second band members to thereby substantially enclose and rigidly maintain the user's body between said first and second support members when said first and second support members are substantially fully inflated.

4,301,792
RESPIRATOR WITH COOLING DEVICE
Adalbert Pasternack, Bad Schwartau, Fed. Rep. of Germany, assignor to Drägerwerk Aktiengesellschaft, Fed. Rep. of Germany
Filed Nov. 7, 1979, Ser. No. 92,190
Claims priority, application Fed. Rep. of Germany, Dec. 15, 1978, 2854166
The portion of the term of this patent subsequent to Feb. 19, 1997, has been disclaimed.
Int. Cl.^{3} A62B *7/00*
U.S. Cl. 128—202.26 **2 Claims**

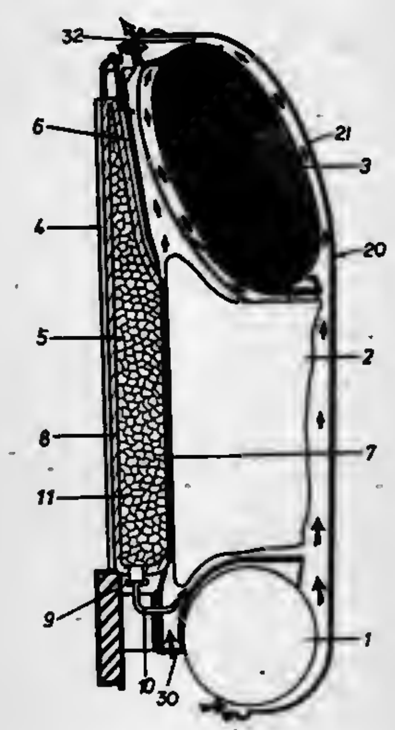

1. An improved portable respirator adapted to be worn on the back of a user of the type having a housing, and cartridge means for containing a chemical mounted in the housing which fixes carbon dioxide or evolves oxygen or both, and an air bag mounted in the housing, comprising, in combination, a support frame integrally connected to the housing, said support frame having wall means defining a compartment adapted to be charged with a coolant, said wall means including an elastic wall portion adapted to bear against the back of the user and a contact wall of heat conducting material spaced from said wall portion, said contact wall being disposed to tightly bear against the air bag responsive to the bearing of said elastic wall portion on the user's back, means for introducing the coolant into said compartment, an insulating layer, said insulating layer being disposed in contact with said wall means except for said contact wall, and said housing having an air inlet and breathing passage means extending from said air inlet into and out of said bag and around the exterior portion of said bag not bearing against said contact wall and around the exterior of said cartridge to a person for respiration.

4,301,793
SIGH PRODUCING MECHANISM FOR POSITIVE PRESSURE RESPIRATOR
Harris S. Thompson, 175 Bellevue Dr., Boulder, Colo. 80302
Filed Nov. 13, 1979, Ser. No. 93,794
Int. Cl.^{3} A61M *16/00*
U.S. Cl. 128—204.21 **5 Claims**

1. A positive pressure breathing apparatus having:

a blower having an electrically operated blower motor controlled by a blower drive circuit and an intake and a discharge;

a cyclic valve having at least one inlet and at least one outlet said inlet being in fluid communication with the discharge of said blower; and means for controlling of said cyclic valve in a timed manner according to inhalation and exhalation phases fluid communication between said inlet and said outlet;

a breathing tube in fluid communication with the outlet of said cyclic valve, provided with means for exhausting air to produce an expiration cycle; and

means for controlling the pressure output of said blower operatively associated with the blower motor to controllably produce a preselected air pressure in said breathing tube, said pressure control means includes a means in the blower drive circuit for changing motor speed, the improvement comprising:

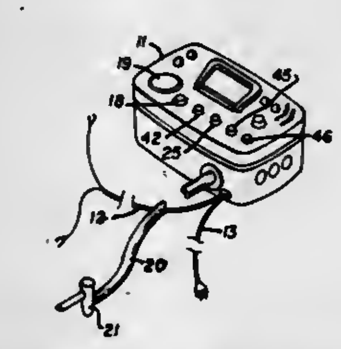

(a) a supplementary control means including a circuit shunting said motor speed changing means to increase the speed of the blower motor and thereby, the pressure at the breathing tube whenever the supplementary control means is activated; and

(b) timer means adapted to activate the supplementary control means after a lapse time period sufficient to provide a large number of inspiration cycles at regular pressure and to continue such activation for a short sustained time period sufficient to provide a small number of inspiration cycles at increased pressure to produce a small number of sigh breaths in the breathing pattern of the respirator between lapse time periods.

4,301,794
METHOD FOR IONTOPHORETIC TREATMENT
Robert Tapper, 175 Acari Dr., Los Angeles, Calif. 90049
Filed Oct. 18, 1978, Ser. No. 952,341
Int. Cl.^{3} A61N *1/30*
U.S. Cl. 128—207.21 **6 Claims**

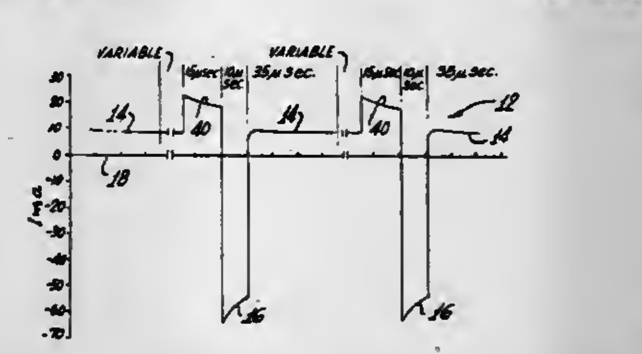

1. A method of minimizing vesicle formation while applying iontophoretic treatment to a living body, said method including the steps of:

conducting direct current through the skin of said body in a first direction from a first electrode to a second electrode on said skin;

intermittently reversing the polarity of said electrodes to cause direct current to flow in a second direction opposite said first direction; and

controlling the flow of said current in said first and second directions so that the energy applied in said first direction exceeds the energy applied in said second direction by a ratio of between about 2:1 and 7:1.

4,301,795
VACCINATION GUN
Josef Zimmermann, Sulzbach, Fed. Rep. of Germany, assignor to Hoechst Aktiengesellschaft, Frankfurt am Main, Fed. Rep. of Germany
Filed Jul. 19, 1979, Ser. No. 86,127
Claims priority, application Fed. Rep. of Germany, Jul. 22, 1978, 2832252
Int. Cl.^{3} A61M *5/30*
U.S. Cl. 128—207.25 **7 Claims**

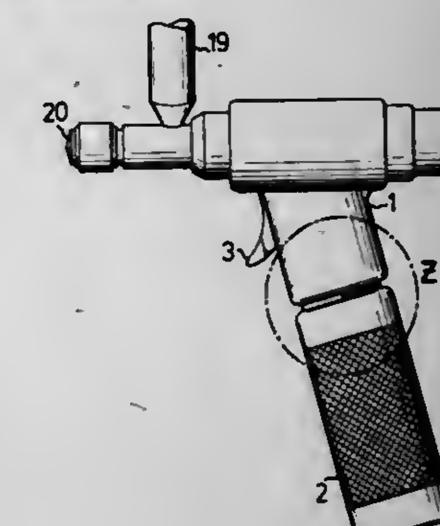

1. In a vaccination gun of the type having a vaccine piston pump, drive motor means for driving the pump, said drive motor means being operated by a propellant gas, locking valve means for selectively admitting said propellant gas to said drive motor means, container means for holding said propellant gas, coupler means for coupling said container means with said locking valve means, and housing means housing said container means and coupler means and forming a gun grip; the improvement wherein said coupler means includes a chamber fluidically connected between said container means and said locking valve means, flap-valve means loosely a chamber and slidably mounted in said chamber and dividing said chamber into a first portion communicating with said container means and a second portion communicating with said locking valve means, said flap-valve means being responsive to pressure released by said locking valve means to move from a first position in said chamber adjacent said container means to a second position in said chamber adjacent said locking means, said coupler means including means for providing a gas leak from said first portion to said second portion of said chamber; and wherein said chamber includes means for sealing against said flap-valve means when in said second position thereby preventing gas flow from said first portion to said second portion except through said means for providing a gas leak whereby, pressure between the first and second portions of the chamber is equalized after said flap-valve means is sealed against said sealing means; and biasing means biasing said flap valve means away from said sealing means and toward said first position after said pressure is equalized.

4,301,796
METHOD AND APPARATUS FOR DISPENSING FLUID
Francis W. Child, Eagle Bend, Minn., assignor to Child Laboratories Inc., Eagle Bend, Minn.
Filed Jul. 26, 1979, Ser. No. 60,916
Int. Cl.^{3} A61M *1/00, 3/00*
U.S. Cl. 128—213 R **48 Claims**

1. An apparatus for dispensing material into the milk duct of a cow's teat comprising: a dilator having means insertable into the milk duct and a one-way valve to restrict movement of material into the milk duct, an envelope having a chamber accommodating the dilator, and dispensing means located in said chamber, said dispensing means having a flexible bag

accommodating the material to be dispensed into the milk duct, and means to carry the material from the bag through the

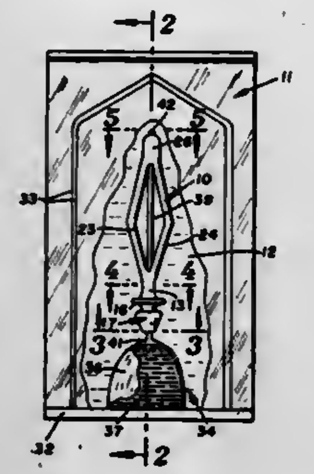

one-way valve and into the milk duct when the dilator is inserted into the milk duct.

4,301,797
BALLOON-TIPPED EXTRACORPOREAL CANNULA APPARATUS AND METHOD FOR INSERTION OF SAME
Charles N. Pollack, 12311 Windsor Dr., Carmel, Ind. 46032
Continuation-in-part of Ser. No. 796,362, May 12, 1977, Pat. No. 4,140,119. This application Nov. 22, 1978, Ser. No. 962,909
The portion of the term of this patent subsequent to Feb. 20, 1996, has been disclaimed.
Int. Cl.³ A61M *5/00*
U.S. Cl. 128—214 R **23 Claims**

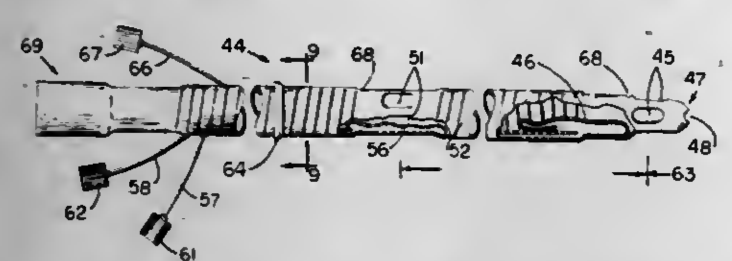

1. A balloon-tipped extracorporeal cannula apparatus suitable for use in a cardiac cannulation technique comprising:
(a) a first elongated and flexible tubular member having a proximal and a distal end, the proximal end being open, said first member including at least one first hole near the distal end thereof;
(b) a first inflatable balloon on the inside wall of said first member adjacent to the first hole therein, said first balloon, when inflated, completely occluding the lumen of said first member and including means for preventing the entrapment of any air near the distal end of said first member upon insertion of the distal end into the circulatory system of a person; and
(c) means, including a flexible tubular passageway communicating with said first balloon, for readily inflating and deflating said first balloon, said first member includes a hole in the distal tip thereof.

4,301,798
VAGINAL SYRINGE
Roy A. Anderson, 4554 N. Malden St., Chicago, Ill. 60640
Filed Jan. 14, 1980, Ser. No. 111,545
Int. Cl.³ A61M *3/00*
U.S. Cl. 128—239 **4 Claims**

1. A vaginal syringe device comprising an elongated body of a size to be partially inserted, when in use, in a vaginal canal, said body having at least one fluid outlet in its distal end portion and a fluid inlet in its proximal end portion, said body also having a plurality of spaced fluid discharge inlets therein which are disposed so that the same will be positioned in the vaginal canal when said syringe device is in use, and a plurality of spaced discharge outlets in said proximal end portion, which discharge outlets are so disposed that the same will be positioned exteriorly of such a vaginal canal when in use, said body including two independent passageways therein, one of which connects said fluid inlet and fluid outlet for the flow of liquid from the exterior into such a vaginal canal, and the other of which connects said discharge inlets and said discharge outlets for the flow of liquid from the interior of such a vaginal canal to the exterior thereof, said body comprising a hollow tubular body member one of which forms said distal end portion, a generally coaxial stem member having a bore portion engaged

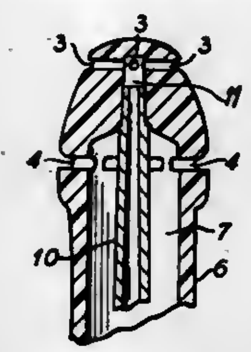

with the proximal end portion of said body member, and an elongated hollow stem portion of a size to be disposed in said tubular body member and extend to and communicate with said fluid outlet in said distal end portion of said body member, said base portion including said fluid inlet therein and said hollow stem portion forming said one passageway connecting said fluid inlet and fluid outlet, said base portion being partially disposed within said body member and including a plurality of longitudinally-extending channels formed in its exterior surface, which channels extend beyond said body member with the exposed portions of said channels forming said discharge outlets.

4,301,799
NON-COLLAPSIBLE MEDICAL FLUID CONTAINER WITH AIR VENT FILTER
J. Lee Pope, Jr., Baltimore, Md., and James W. Scott, Lindenhurst, Ill., assignors to Baxter Travenol Laboratories, Inc., Deerfield, Ill.
Filed Oct. 29, 1979, Ser. No. 89,600
Int. Cl.³ A61J *1/00*
U.S. Cl. 128—272 **16 Claims**

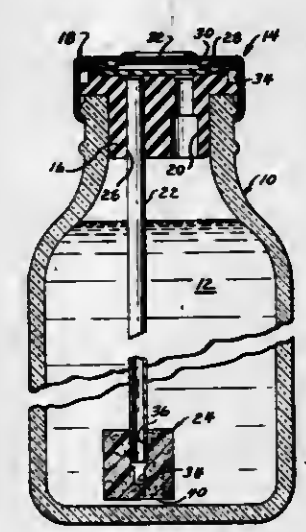

11. In a non-collapsible medical fluid container of the type adapted to be emptied by inverting the container to discharge the fluid through closure means normally closing the top of the container and including a displacement air vent tube extending from the closure means toward the bottom of the container for venting displacement air into the container during liquid discharge, the improvement comprising a rigid microporous

depth filter carried on the lower end of said vent tube and including a cylindrical bore-shaped recess therein for receiving said lower end of said tube, said depth filter having a surface portion closely spaced relative to the interior surface of the bottom wall of the container, the length of said bore-shaped recess being greater than the distance between said surface portion and said interior surface to prevent dislodgement of the filter from the tube during venting.

4,301,800
BLOOD BAGS HAVING AN INSERT MEMBER
Henry W. Collins, Deerfield, Ill., assignor to Baxter Travenol Laboratories, Inc., Deerfield, Ill.
Continuation of Ser. No. 954,969, Oct. 26, 1978, abandoned. This application May 19, 1980, Ser. No. 151,447
Int. Cl.³ A61M *5/00*
U.S. Cl. 128—272 **19 Claims**

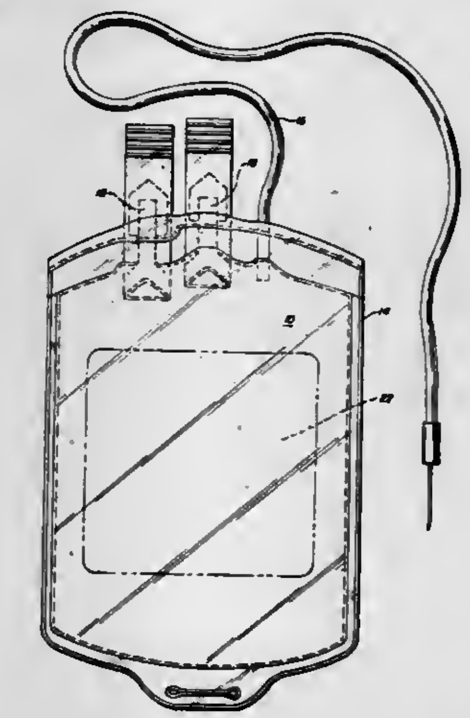

1. A blood bag which comprises a flexible, translucent container equipped with access tubing and sealed access ports, said blood bag comprising: a flexible, hemocompatible, sterilizable plastic material, essentially free of blood-extractable plasticizer, said blood bag containing an insert member, said insert member comprising a non-toxic, sterilizable plastic formulation which contains from 5 to 70 percent by weight of a blood-extractable plasticizer selected from the group consisting of the dioctylphthalates and dioctyladipates.

4,301,801
ELECTROSURGE FAILSAFE SYSTEM
Max Schneiderman, Clifton, N.J., assignor to IPCO Hospital Supply Corporation (Whaledent International Division), New York, N.Y.
Filed Feb. 16, 1979, Ser. No. 12,831
Int. Cl.³ A61B *17/36*
U.S. Cl. 128—303.14 **10 Claims**

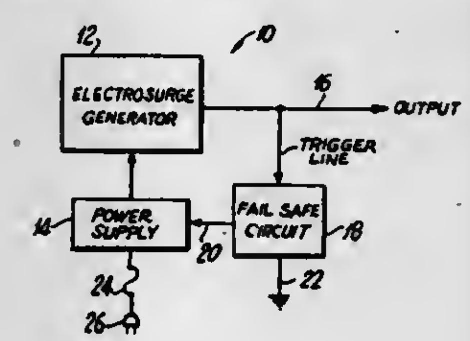

1. In an electrosurge generator energized by a power supply, and producing an output voltage of a desired level, an improvement comprising
a failsafe circuit for preventing an excessive high output voltage from the electrosurge generator resulting from a failure therein,
said failsafe circuit including voltage detection means coupled in parallel across the voltage output of the electrosurge generator for detecting an excessive high output voltage of at least a predetermined threshold, and
a switching circuit means activated by said detection means and connected in parallel across the power supply for short circuiting the power supply without diverting the output current to flow therethrough, thereby removing the power supplied from the power supply to the electrosurge generator.

4,301,802
CAUTERIZING TOOL FOR OPHTHALMOLOGICAL SURGERY
Stanley Poler, 78 E. Second St., New York, N.Y. 10003
Filed Mar. 17, 1980, Ser. No. 131,198
Int. Cl.³ A61B *17/36*
U.S. Cl. 128—303.14 **8 Claims**

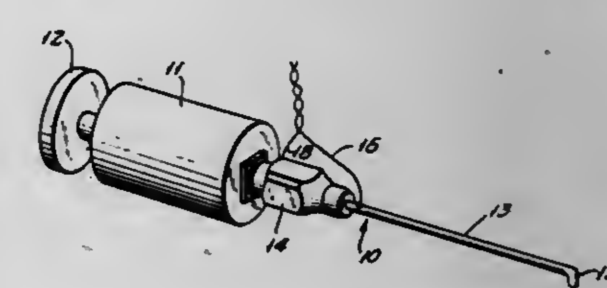

1. As an article of manufacture, a cauterizing tool comprising a tubular hypodermic-needle shaft having an elongate body with a syringe-adapter fitting at an upstream supply end and a substantially right-angle bend at a downstream discharge end, the radial offset at said bend being a small fraction of the elongate length of said shaft, and electrically conductive cable means for electrical cauterizing supply to said discharge end, said cable means being of cross-sectional area less than that of the bore of said shaft and extending within and for the preponderance of the length of said shaft, said cable means projecting through and beyond the discharge end of said shaft and having an externally exposed conductive working-electrode surface at said discharge end, whereby when fitted to a syringe having a supply of suitable irrigation fluid, and when said cable means is connected for excitation with a supply of cauterizing voltage, a region of cauterizing surgery may be irrigated without need for removal of the working-electrode surface from the region of surgical operation, said cable means being characterized by preformed zig-zag bends within said shaft near said discharge end, the zig-zag offsets in unstressed condition being greater than the bore diameter of said shaft, whereby said cable means is compliantly loaded in stabilizing contact with the bore of said shaft near said electrode surface for stabilized positioning support of said working-electrode surface with respect to said discharge end.

4,301,803

BALLOON CATHETER

Hajime Handa; Yasuhiro Yonekawa; Sen Yamagata; Waro Taki, all of Kyoto; Yoshito Ikada, and Hiroo Iwata, both of Uji, all of Japan, assignors to Kuraray Co., Ltd., Kurashiki, Japan

Filed Sep. 28, 1979, Ser. No. 80,037

Claims priority, application Japan, Oct. 6, 1978, 53-123914; Mar. 19, 1979, 54-32645

Int. Cl.³ A61M *25/00*

U.S. Cl. 128—349 B 7 Claims

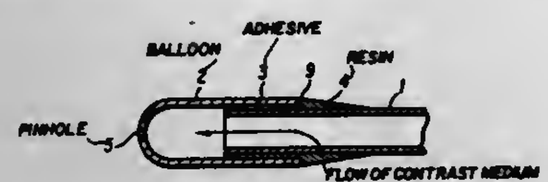

1. A balloon catheter comprising:

a tubular catheter having an outer surface and an end portion;

an inflatable balloon having an outer surface and mounted on said end portion of said catheter so that a fluid is introduced into the balloon from the catheter;

said catheter further comprising a fine tube having an outer diameter of 100 to 1000μ and a wall thickness of 10 to 400μ;

said balloon comprising an elastomer having a wall thickness less than 500μ in a non-inflated state;

said balloon being attached to the catheter so as to surround the outer surface of said end portion of the catheter;

adhesive means for securing said balloon to said outer surface of said end portion of the catheter; and

a resin layer formed on the outer surface of the catheter adjacent said end portion of the catheter so as to form a smooth surface contiguous to and located between said outer surface of said balloon and the outer surface of the catheter.

4,301,804

PACEMAKER WITH HALL EFFECT EXTERNALLY CONTROLLED SWITCH

David L. Thompson, Fridley; Stephen R. Duggan, Rosemount, and Glenn M. Roline, Anoka, all of Minn., assignors to Medtronic, Inc., Minneapolis, Minn.

Filed Nov. 28, 1979, Ser. No. 98,168

Int. Cl.³ A61N *1/36*

U.S. Cl. 128—419 PG 8 Claims

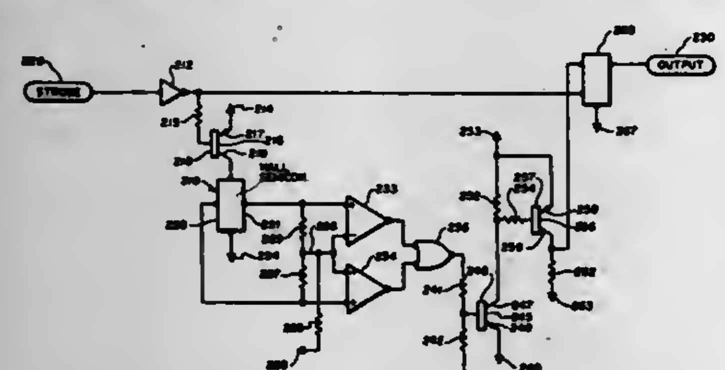

1. A body-implantable pulse generator for providing stimulating pulses to living tissue, comprising:

means for generating said stimulating pulses;

a semiconductor;

means for causing an electrical current flow through said semiconductor;

means for detecting a voltage produced in said semiconductor in a direction perpendicular to the direction of said current flow; and

means responsive to said means for detecting for controlling said means for generating in response to an externally applied magnetic field.

4,301,805

CARDIAC PACER CONNECTOR SYSTEM

Charles A. Peers-Trevarton, Coral Springs; Peter P. Tarjan, Miami; Stephen F. Vadas, Homestead, and Frederick S. Dorman, Boca Raton, all of Fla., assignors to Cordis Corporation, Miami, Fla.

Filed Jul. 30, 1980, Ser. No. 173,640

Int. Cl.³ A61N *1/00*

U.S. Cl. 128—419 P 4 Claims

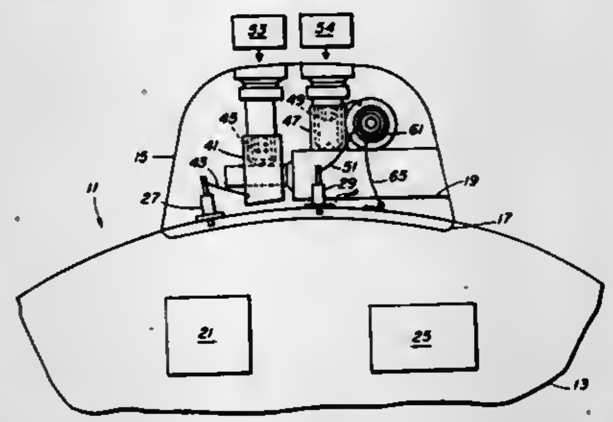

1. A cardiac pacer incorporating a connector system usable with either a unipolar lead having a single distal electrode or a bipolar lead having both a distal electrode and a reference electrode, both types of lead incorporating at the proximal end thereof a generally cylindrical plug having an extending pin portion to which the distal electrode is electrically connected, the plug of the bipolar lead having an annular ring to which the reference electrode is electrically connected; said pacer comprising:

pulse generator means including an output circuit having a first side and a second side;

batteries for powering said pulse generator means;

a casing for said batteries and said pulse generator means including at least one conductive case wall;

a first clamping means for establishing an electrical connection to said pin extending from said plug, said first clamping means being connected to one side of said output circuit;

a second clamping means for establishing an electrical connection to said annular ring on said plug; and

selectively operable electrical bridging means having a first part connected to the other side of said output circuit, a second part connected to said case wall, and a third part connected to said clamping means

whereby, in the absence of a reference electrode on said lead, said bridging means may be operated to connect said first part and said second part so that said case wall is employed as a reference potential for the distal electrode; and whereby, in the presence of a reference electrode on said lead, said bridging means may be operated to connect said first part and said third part so that said reference electrode is electrically connected to the other side of said output circuit.

4,301,806

ROTATING MECHANISM FOR INTRODUCING A FETAL ELECTRODE

Joel N. Helfer, New Haven, Conn., assignor to American Home Products Corporation, New York, N.Y.

Filed Apr. 14, 1980, Ser. No. 140,366

Int. Cl.³ A61B *5/04*

U.S. Cl. 128—642 9 Claims

1. An improved electrode structure for use in monitoring fetal heartbeat and the like, comprising:

a guide tube having an open forward end adapted to be inserted through the vagina and cervix of a woman in labor;

signal acquisition means adapted to rotatably engage a fetal epidermis; the signal acquisition means being rotatably disposed in the guide tube;

a driving member rotatably disposed in the guide tube and positioned to engage the signal acquisition means to impart rotational motion thereto for driving the signal acquisition means into engagement with a fetal epidermis;

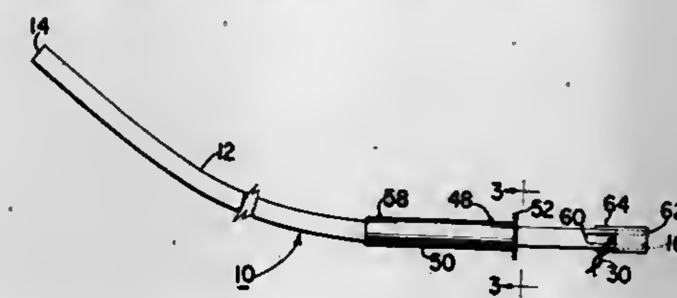

a first line attached at a first end to the driving member and wrapped circumferentially around at least a portion of the driving member; and

line unwinding means affixed to a second end of the line for pulling the line tangentially with respect to the driving member;

whereby the driving member and the signal acquisition means may be rotated for engaging a fetal epidermis.

4,301,807

APPARATUS AND METHOD FOR TEMPERATURE COMPENSATED TRANSCUTANEOUS CARBON DIOXIDE MEASUREMENT

Richard A. Mentelos, Hamden, Conn., assignor to Novametrix Medical Systems, Inc., Wallingford, Conn.

Filed Dec. 5, 1979, Ser. No. 100,501

Int. Cl.³ A61B *5/00*

U.S. Cl. 128—635 18 Claims

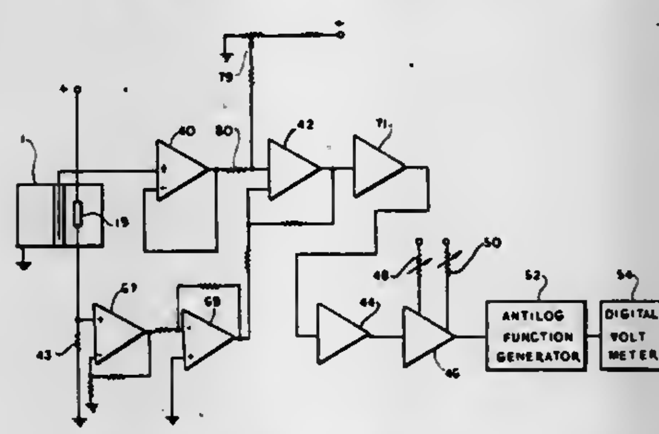

1. A transcutaneous carbon dioxide probe for producing a signal having a characteristic with a magnitude indicative of carbon dioxide perfusion through the skin substantially independent of temperature variations comprising

pH sensitive electrode means having a surface adapted to engage the skin and an output terminal at which there is produced an output signal having a characteristic with a magnitude which varies with the magnitude of carbon dioxide emitted through the skin at the region of engagement,

temperature sensor means for sensing the temperature of said pH electrode means and generating an error signal independent of said output signal and having a characteristic with a magnitude dependent on the temperature of said pH electrode means, and

means for combining said output signal and said error signal to produce a corrected signal having a characteristic with a magitude indicative of transcutaneous carbon dioxide pressure at a predetermined temperature.

4,301,808

PULSE RATE MONITOR

Herbert G. Taus, 451 Ridge Run, Centre Square, Pa. 19422

Filed Nov. 19, 1979, Ser. No. 95,321

Int. Cl.³ A61B *5/02*

U.S. Cl. 128—687 15 Claims

1. A pulse monitoring system for detecting and displaying blood pressure pulses resulting from heartbeats, comprising sensing means adapted to be positioned in contact with body tissue to respond to changes in blood volume, said sensing means including detector means and at least two light emitters, one of said emitters being a light transmitting emitter positioned to transmit light through said body tissue to said detector means and the other being a light reflecting emitter positioned to reflect light therefrom to said detector means, said detector means sensing changes in said light transmitted and changes in said light reflected due to variations in tissue perfusion and producing an electrical signal corresponding to said changes, signal processing means for converting said electrical signal to pulse rate.

4,301,809

ESOPHAGEAL MONITORING APPARATUS

Alfred C. Pinchak, 19750 Fairmount Blvd., Shaker Hts., Ohio 44118

Filed Mar. 13, 1980, Ser. No. 130,074

Int. Cl.³ A61B *5/02*

U.S. Cl. 128—695 15 Claims

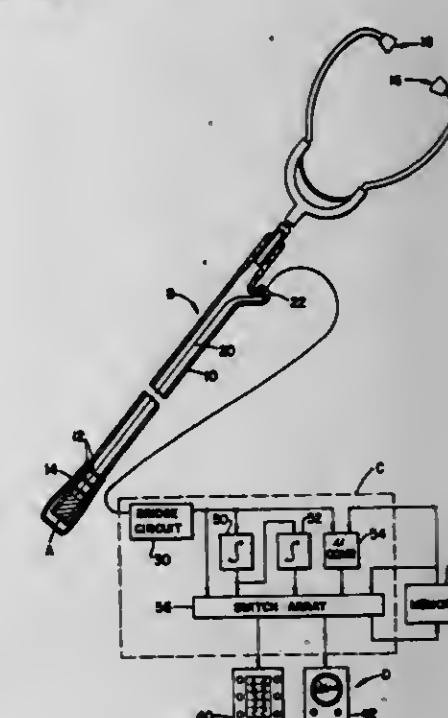

1. An esophageal stethoscope for audibly and electronically monitoring the caridovascular system of a patient, the stethoscope comprising:

a flexible tube adapted to be disposed in the patient's esophagus;

at least one aperture disposed adjacent one end of the tube;
a sound transmitting membrane disposed adjacent said aperture for permitting sound to be received within the tube;
listening means acoustically connected with said tube for enabling an operator to listen to sound within the tube;
at least one electrokinetic transducer means for producing electric signals which indicate the magnitude and direction of a function of the electrokinetic transducer means' motion during positional cycling of the heart, the electrokinetic transducer means being attached near said flexible tube one end;
signal processing means for operating on said electrical signal to produce at least one representation indicative of a preselected function of the motion of the electrokinetic transducer means, said signal processing means being operatively connected with said electrokinetic transducer means; and
display means for producing at least one display of said representation, said display means being electrically connected with said signal processing means.

4,301,810
VENTILATORY MUSCLE TRAINING APPARATUS
Michael J. Belman, West Covina, Calif., assignor to City of Hope National Medical Center, Duarte, Calif.
Filed Feb. 29, 1980, Ser. No. 125,837
Int. Cl.³ A61M *15/00*
U.S. Cl. 128—720 **16 Claims**

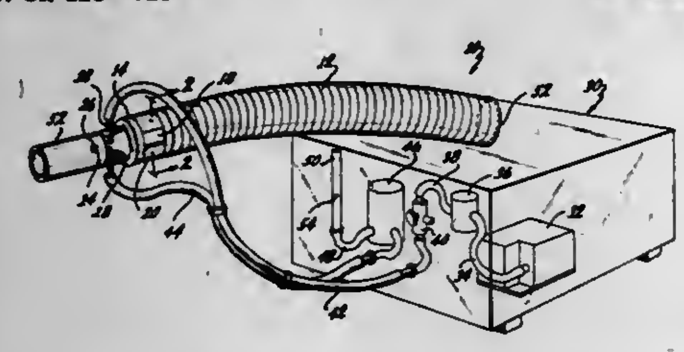

9. A ventilatory muscle training apparatus including a gas rebreathing system having a reservoir means and a mouthpiece connected to said reservoir means for use by an individual in conveying gas into and out of said reservoir means during inhalation and exhalation and a gas content control means for venting some exhaled gas from said rebreathing system to the ambient during the use of said rebreathing system and for supplying some makeup ambient air to said rebreathing system during inhalation so that the gas inhaled through said mouthpiece has a carbon dioxide content within the physiological limits of the individual using said system which approximate the patient's normal mixed expired carbon dioxide level in which the improvement comprises:
said reservoir means being larger than the lung capacity of a user and being substantially incapable of providing any resistance to the exhalation of gas through said mouthpiece into said reservoir means,
said gas content control means comprises an adjustable aperture means located within said system sufficiently adjacent to said mouthpiece so that some of the expired gas during exhalation is vented to the ambient and so that some ambient air is drawn into said system through said aperture means so as to be inhaled through the use of said mouthpiece along with gas from within said reservoir means, and
gas flow measurement means for measuring gas flow through said mouthpiece during inhalation and exhalation, said gas flow measurement means including indicating means for indicating whether or not said apparatus is being utilized at a desired breathing level.

4,301,811
CYSTOMETRY SYSTEM
Terry N. Layton, Arlington Heights, Ill., assignor to The Kendall Company, Boston, Mass.
Division of Ser. No. 955,723, Oct. 27, 1978, Pat. No. 4,217,911. This application Apr. 4, 1980, Ser. No. 137,224
Int. Cl.³ A61B *5/00*
U.S. Cl. 128—748 **8 Claims**

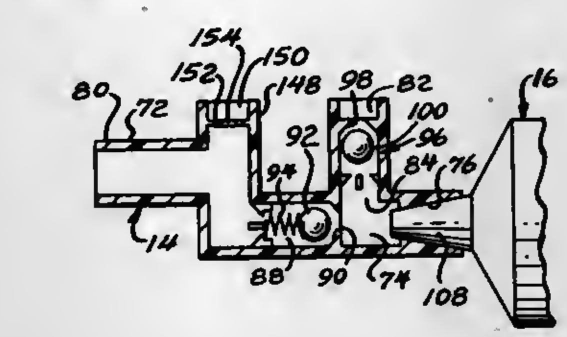

1. A system to measure the pressure-volume relationship in a body cavity of a patient, comprising:
a source of fluid;
a catheter having an elongated shaft defining an infusion lumen communicating with an infusion opening adjacent a distal end of the shaft;
pump means;
valve means communicating with the catheter infusion lumen, the pump means, and the supply, said valve means permitting passage of fluid from the supply to the pump means and preventing passage of fluid from the pump means to the supply, said valve means permitting passage of fluid under pressure from the pump means to the infusion lumen and preventing passage of fluid from the infusion lumen to the pump means;
pressure measuring means effectively communicating with the infusion lumen intermediate the infusion opening and the valve means;
means for preventing passage of fluid from the supply to the infusion lumen below a predetermined pressure, and permitting passage of fluid above the predetermined pressure responsive to pressure generated by the pump means; and
means, interposed between the infusion lumen and the pressure measuring means, defining a restricted opening for limiting passage of fluid into the pressure measuring means whereby, during operation of said pump means to direct fluid into a body cavity through said infusion lumen, passage of fluid into said pressure measuring means is limited to a negligible amount.

4,301,812
MIDSTREAM SAMPLING DEVICE
Terry N. Layton, Arlington Heights, and Carl J. Steigerwald, Wauconda, both of Ill., assignors to The Kendall Company, Boston, Mass.
Filed Dec. 12, 1979, Ser. No. 102,673
Int. Cl.³ A61B *10/00;* **G01N** *1/10*
U.S. Cl. 128—761 **14 Claims**

1. A midstream sampling device for collecting the midstream portion of a urine discharge from a female patient, comprising: a housing defining a chamber therewithin, said housing being structured to be supported on a horizontal surface when not in use; means defining an outer port at one end of said housing, said port having a generally oval shape and being configured to be placed against the labia of a female and receive urine passing from the uretha; means defining an inner port within said chamber, said inner port being smaller than said outer port and being arranged adjacent thereto to receive the midstream portion of a urine discharge; means defining a first cavity within said housing and including a portion of said housing, said first cavity being connected to and in fluid communication with said inner port for initial collection of the midstream discharge; a first outlet port within said first cavity through which the midstream discharge flows; a receptacle detachably connected to said first outlet port for receiving the midstream discharge from said first cavity; means defining a second cavity and including another portion of said bousing, said second cavity arranged to receive the initial portion of a

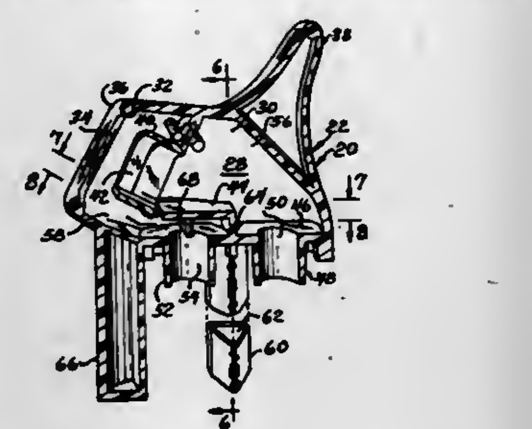

urine discharge through said outer port, from the lower portion of the space between said outer port and said inner port; and means defining at least one overflow aperture within said first cavity whereby, during use of said sampling device and upon filling of said receptacle, excess urine within said first cavity will drain from said first cavity through said aperture.

4,301,813
URINE METER
Jack D. Merry, Summerville, S.C., and William J. Dunn, Libertyville, Ill., assignors to The Kendall Company, Boston, Mass.
Filed Apr. 11, 1980, Ser. No. 139,303
Int. Cl.³ A61B *5/00, 19/00*
U.S. Cl. 128—762 **9 Claims**

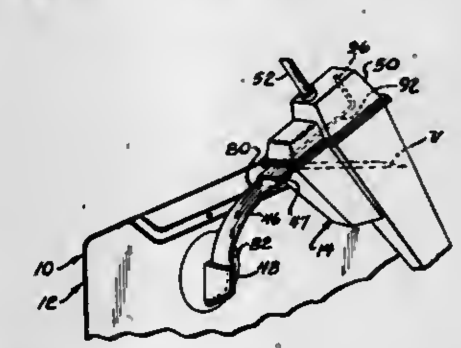

1. A urine meter, comprising:
a container having a cavity for collection of urine;
a receptacle having a chamber to receive urine and being closed to the atmosphere in the receptacle;
a drainage tube having a downstream and communicating with an upper portion of the receptacle; and
means communicating between an upper portion of the receptacle and an upper portion of the container, including first channel means for the passage of urine from the receptacle to the container and second channel means for the passage of air from the container to the receptacle.

4,301,814
CASSETTE IMPLANT
Meer Saeer, 24 Baalei Melacha St., Tel-Aviv, Israel
Continuation-in-part of Ser. No. 897,535, Apr. 18, 1978, abandoned. This application Dec. 28, 1979, Ser. No. 108,170
Int. Cl.³ A61B *10/00*
U.S. Cl. 128—769 **12 Claims**

1. A Cassette implantable in a mammalian body comprising a housing with at least one transparent wall, with at least one removable and replaceable wall portion, inlet means and outlet means for a supply of nutrients and of chemicals, said housing containing a support member provided at its upper surface with one or more distinct and separate recessed emplacements, each of these adapted to receive a single cell, providing space if desired for two cells upon cell division, said recessed em-

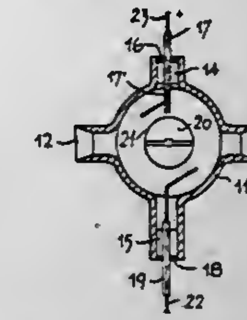

placement being connected by suitable channel means with the supply of nutrients and chemicals.

4,301,815
TRAILING TINE ELECTRODE LEAD
Carl Doring, Wollstonecraft, Australia, assignor to Telectronics Pty. Limited, Lane Cove, Australia
Filed Jan. 23, 1980, Ser. No. 114,950
Int. Cl.³ A61N *1/04*
U.S. Cl. 128—785 **20 Claims**

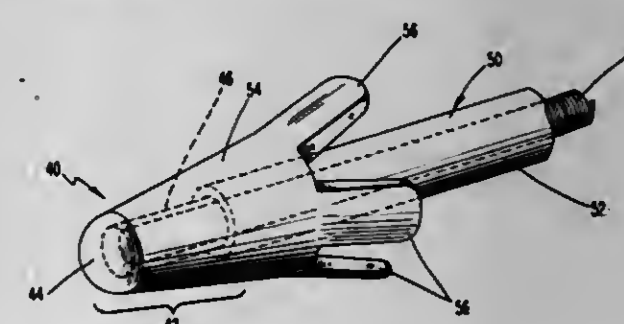

1. A trailing tine electrode lead comprising:
a. an exposed conductive distal tip and a conductive shank supporting said distal tip;
b. an electrical conductor coupled to the proximal end of said shank;
c. insulating means for insulating said shank and said conductor, said insulating means including a transitional section having a proximal end; and
d. means connected to said insulating means at, and trailing behind, said proximal end of said transitional section for anchoring said electrode lead, said anchoring means comprising a plurality of foldable, flexible tines, said tines extending at an angle with respect to the longitudinal axis of said electrical conductor and when folded collapsing within the circumference of said transitional section.

4,301,816
METHOD OF MAKING ROD-SHAPED SMOKERS' PRODUCTS WITH MULTIPLEX FILTER MOUTHPIECES
Günter Wahle, Reinbek; Heinz Greve, and Herbert Berlin, both of Hamburg, all of Fed. Rep. of Germany, assignors to Hauni-Werke Körber & Co. KG, Hamburg, Fed. Rep. of Germany
Filed Jan. 23, 1979, Ser. No. 5,710
Claims priority, application Fed. Rep. of Germany, Feb. 6, 1978, 2804991
Int. Cl.³ A24D *1/04, 3/00*
U.S. Cl. 131—88 **14 Claims**

1. A smokers' product, particularly a filter cigarette, comprising coaxial first and second rod-like sections one of which includes a tobacco filler and a tubular wrapper surrounding said filler, the other of said sections comprising a plurality of coaxial filter plugs at least one of which comprises an unwrapped rod consisting of filter material and having a rein-

forced porous peripheral layer; and a tubular envelope surrounding said other section and that portion of said one section

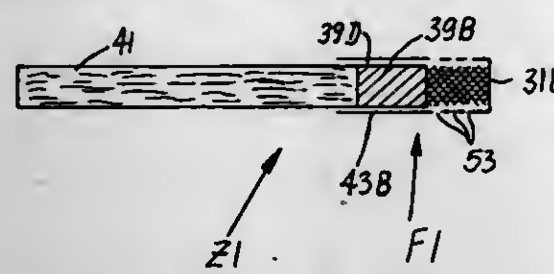

which is adjacent to said other section, said envelope having a perforated portion surrounding said one filter plug.

4,301,817

METHOD FOR SELECTIVE DENITRATION OF TOBACCO

Gus D. Keritsis, Richmond, Va., assignor to Philip Morris Incorporated, New York, N.Y.

Filed Mar. 5, 1980, Ser. No. 127,386

Int. Cl.³ A24B *15/24*

U.S. Cl. 131—297 17 Claims

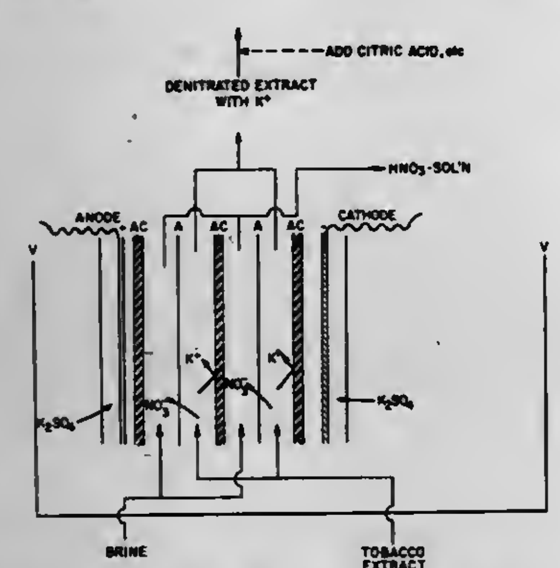

1. A method of treating tobacco to reduce its delivery of gas phase components during combustion which comprises:

(a) contacting a tobacco material with an aqueous solution to obtain an aqueous potassium nitrate containing extract and an insoluble tobacco residue;

(b) separating the aqueous extract from the insoluble tobacco residue;

(c) selectively removing the nitrate ions from the tobacco extract without substantially reducing the potassium ion level employing an ionic extraction technique; and

(d) combining the denitrated aqueous extract with insoluble tobacco residue which has been treated in accordance with steps (a) and (b).

4,301,818

AUTOMATIC CIGARETTE BUTT EXTINGUISHING DEVICE

Kenji Niida, 2-3-17, Nishi, Kunitachi-shi, Tokyo, Japan

Filed Mar. 4, 1980, Ser. No. 127,045

Claims priority, application Japan, Mar. 12, 1979, 54-29057

Int. Cl.³ A24F *19/14*

U.S. Cl. 131—237 12 Claims

1. An automatic cigarette butt extinguishing device comprising a case; a cigarette butt inserting inlet means mounted on the case; cigarette butt extinguishing means located in the case; means detecting a cigarette butt inserted into the cigarette butt inserting means to start the cigarette butt extinguishing means; and electrical circuit means responsive to said detecting means

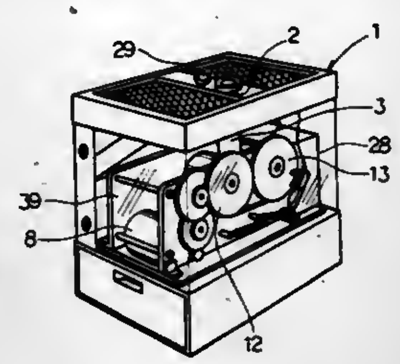

for maintaining the operation of the cigarette butt extinguishing means until the latter extinguishes the cigarette butt.

4,301,819

APPARATUS FOR PREVENTION OF MATERIAL BUILD-UP SUCH AS TOBACCO IN A CONDUIT

Ken W. Davies, Lagos, Nigeria, and Don J. Disch, Charlestown, Ind., assignors to Brown & Williamson Tobacco Corporation, Louisville, Ky.

Filed Apr. 11, 1980, Ser. No. 139,535

Int. Cl.³ A24B *3/12, 3/18*

U.S. Cl. 131—302 6 Claims

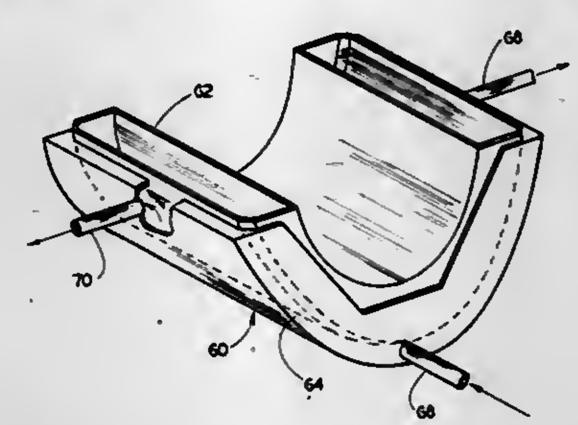

1. A method for preventing the buildup of tobacco in a bend in a conduit containing a gas stream having water vapor therein which comprises: passing tobacco materials in a gas stream having water vapor therein through the bend in a conduit; and, cooling the interior surface of the bend to a temperature below the condensing point of the water vapor.

4,301,820

PERMANENT WAVING COMPOSITIONS CONTAINING FATTY ACID LACTYLATES AND GLYCOLATES AND THEIR METHOD OF USE

David W. Cannell, Los Angeles, and Geoffrey R. Hawkins, Granada Hills, both of Calif., assignors to Redken Laboratories, Inc., Canoga Park, Calif.

Filed Feb. 4, 1980, Ser. No. 118,231

Int. Cl.³ A45D *7/04;* A61K *7/09*

U.S. Cl. 132—7 45 Claims

1. In a permanent waving composition for hair which contains at least one reducing agent for hair wherein the improvement comprises having in the permanent waving composition, at least one humectant compound selected from the group consisting of fatty acid lactylates and fatty acid glycolates of the formula:

$$RCO-\left[O\overset{\overset{A}{|}}{C}HCO\right]_x-OH$$

wherein RCO is an acyl radical of a fatty acid having from about 6 to about 22 carbon atoms, A is CH_3 or H, and x has a value from 1 to about 4, and ammonium, alkali metal and amine salts thereof; the total amount of humectant compound included in said composition being sufficient to impart to hair, permanently waved using the composition, increased moisture retention and insufficient to have a substantial adverse affect on waving efficiency of the hair as compared to hair permanently waved using the composition in the absence of said humectant compound.

4,301,821

NAIL CARE CAROUSEL

Robert A. Bennett, 170 Sturbridge Rd., Easton, Conn. 06425

Filed Apr. 17, 1980, Ser. No. 141,153

Int. Cl.³ A45D *29/04*

U.S. Cl. 132—75.6 7 Claims

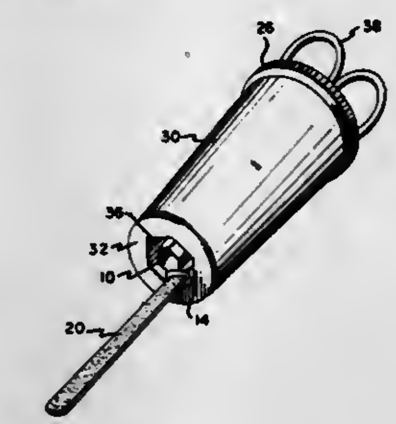

1. A device for use in manicuring, said device comprising:

a vertical member;

a plurality of vertical elements disposed side by side, each element being secured to said member by a corresponding living hinge, each element having vertically upright and vertically inverted positions, each element having a recess which points downward when the element is upright and which points upward when the element is inverted; and

a like plurality of elongated manicuring implements, each implement having a head detachably engaging a corresponding recess in a corresponding element, each implement extending downward when its corresponding element is upright and extending upward when its corresponding element is inverted.

4,301,822

WATER CENTERED CONE UPPER SPRAY ARM FOR DISHWASHERS

Geoffrey L. Dingler, St. Joseph Township, Berrien County, Mich., assignor to Whirlpool Corporation, Benton Harbor, Mich.

Filed Jul. 3, 1980, Ser. No. 166,082

Int. Cl.³ B08B *3/02*

U.S. Cl. 134—176 13 Claims

1. An article washing apparatus comprising:

(a) a cabinet;

(b) an open article holder in said cabinet;

(c) a rotary spray arm mounted on said open article holder and rotatable about an axis of rotation;

(d) means for projecting a liquid jet generally coaxial with said axis of rotation of said spray arm;

(e) a jet receiver on said spray arm, said receiver having a central axis generally coinciding with said axis of rotation for receiving the projected liquid jet;

(f) means for mounting said receiver on said spray arm for lateral shifting of the receiver relative to the axis of rotation of the spray arm, said receiver laterally movable by a

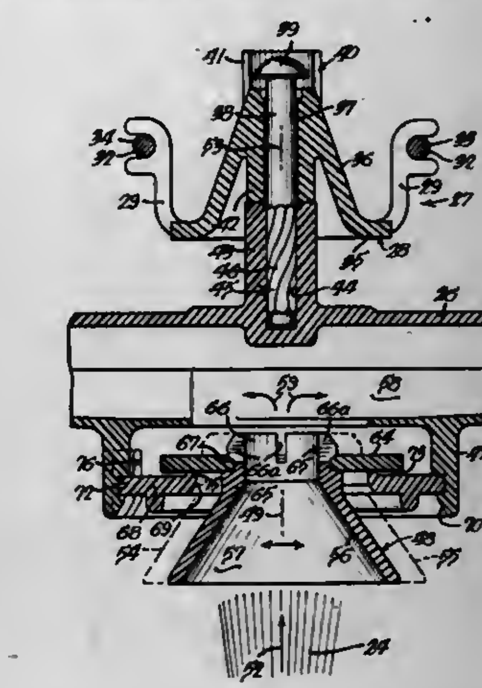

force exerted on said receiver by said jet for self-alignment of the receiver coaxially with said jet; and

(g) cooperating liquid flow means on said receiver and said spray arm for directing liquid from said receiver over articles held in said article holder.

4,301,823

SELF-CLOSING BREAKAWAY VALVE ASSEMBLY INCLUDING IMPROVED VALVE MOUNTING WITH ROTATION LIMITING STOP

Daniel T. Meisenheimer, Jr., 404 Longmeadow, Orange, Conn. 06477

Filed Feb. 9, 1979, Ser. No. 10,745

Int. Cl.³ F16K *17/40*

U.S. Cl. 137—68 R 20 Claims

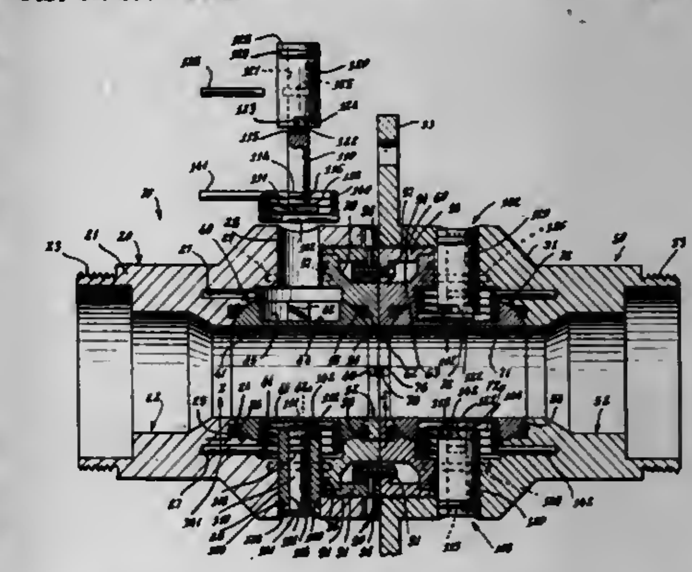

1. An improvement in self-closing breakaway valve assemblies of the type comprising:

(A) a first valve housing having a first rotatable valve member rotatably mounted therein, said first valve housing and first rotatable valve member each having a bore formed therethrough, said bores being aligned when said first rotatable valve member is in an open position to provide a passage through said first valve housing, and said first rotatable valve member spring biased to rotate to a closed position wherein the bores of said first rotatable valve

member and said first valve housing are misaligned to block the passage through said first valve housing;
(B) a second housing having a bore formed therethrough;
(C) frangible means connecting said first valve housing and second housing with the bores formed therethrough in alignment; and
(D) means holding the first rotatable valve member in its open position and releasing the first rotatable valve member upon separation of the first valve housing and second housing to permit the first rotatable valve member to rotate to its closed position,

wherein the first rotatable valve member has first and second trunnion shafts disposed along its desired pivot axis and wherein the improvement comprises valve member mountings with rotation limiting stops including:
(1) first and second trunnion bearings defining openings respectively rotatably receiving the first and second trunnion shafts of the first rotatable valve member, the trunnion bearings fixedly mounted in the first valve housing to mount the first rotatable valve member for rotation about the desired pivot axis, the first trunnion bearing defining an arcuate slot having a stop surface and the opening in the first trunnion bearing extending the length thereof;
(2) a key received in a slot defined by the first trunnion shaft of the first rotatable valve member and extending into the arcuate slot of the first trunnion bearing, whereby the key travels in the arcuate slot as the first rotatable valve member rotates from its open position toward its closed position and the key grounds against the stop surface of the arcuate slot to limit rotation of the first rotatable valve member beyond its closed position and hold it at its closed position; and
(3) an indicator shaft received in the opening in the first trunnion bearing, one end of the indicator shaft being engaged with the key received in the slot of the first trunnion shaft of the first rotatable valve member whereby the indicator shaft rotates therewith, and the other end of the indicator shaft being exposed and having means thereon for indicating the position of the first rotatable valve member.

4,301,824

SUMP LEVEL MAINTENANCE SYSTEM

James R. Payne, Speedway, Ind., assignor to General Motors Corporation, Detroit, Mich.

Filed Dec. 1, 1980, Ser. No. 211,643

Int. Cl.³ G05D *11/035*

U.S. Cl. 137—110 **3 Claims**

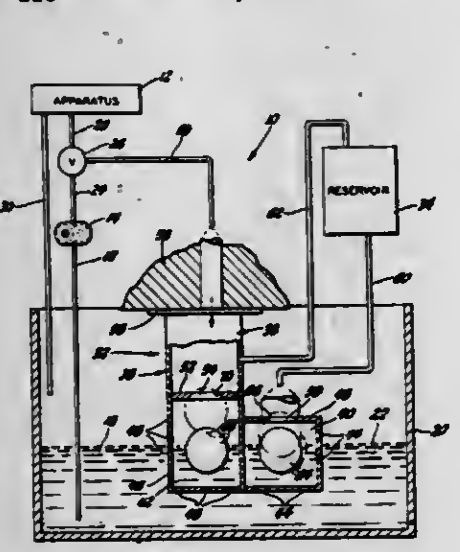

1. In a fluid circulation system for an apparatus requiring a supply of fluid under pressure, said circulation system including a sump containing a volume of fluid having a surface defining a fluid level in said sump, a pump operative to draw fluid from said sump for supply to said apparatus, and an overage return passage for directing overage fluid from said apparatus to said sump, a fluid level maintenance system comprising a fluid reservoir disposed above said sump, float means in said sump engaging said fluid and movable vertically with said fluid level, means defining a first port means in communication with said reservoir and said sump so that fluid in said reservoir can drain by gravity into said sump, means defining a second port means between said overage passage and said sump so that said overage fluid flows through said second port means before entering said sump, port sealing valve means between said float means and each of said first and said second port means operative to open each of said first and said second port means when said fluid level in said sump is below a low level and to seal said first port means when said fluid level is between said low level and a high level and to seal both of said first and said second port means when said fluid level is above said high level, and passage means between said overage return passage and said reservoir for directing said overage fluid to said reservoir when said second port means is closed.

4,301,825

FUEL FLOW CONTROL VALVE ASSEMBLY

Aladar O. Simko, Dearborn Heights, Mich., assignor to Ford Motor Company, Dearborn, Mich.

Filed Dec. 8, 1978, Ser. No. 967,936

Int. Cl.³ F02B *3/00;* G05D *11/02*

U.S. Cl. 137—111 **11 Claims**

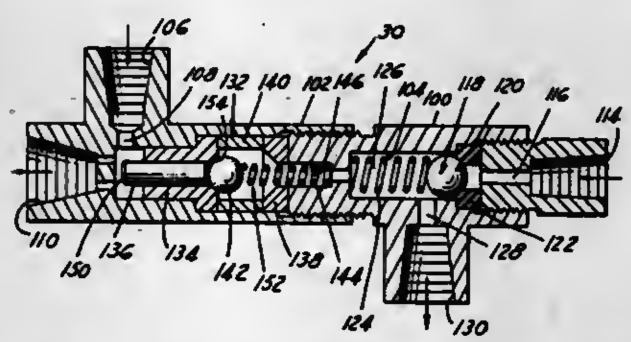

1. A fuel flow control valve assembly for selectively supplying fuel at two different pressure levels to a pair of fuel injectors mounted in a combustion chamber means and each operable at one of the pressure levels, comprising a valve body having first and second fuel inlets, and first and second fuel outlets connected respectively to first and second fuel injectors, the first inlet containing fuel varying in pressure from essentially zero to a high level, the second inlet containing fuel at an essentially constant low level, first and second conduit means connecting the first and second inlets respectively to the first and second outlets, the outlets each containing a normally closed pressure relief valve permitting a pressure buildup in the first and second conduit means upon an increase in pressure of the fuel in the inlets to predetermined levels, the first outlet pressure relief valve being operable to open at a higher pressure level than the second outlet pressure relief valve, a fuel pressurizing chamber connected to the second inlet and to the second outlet, the second inlet having a spring seated ball check valve means therein normally blocking the second inlet and acted upon by the fuel in the second inlet and movable at times to an open position to admit makeup fuel to the chamber, a shuttle valve means reciprocatingly mounted for progressive movement into the chamber to decrease the volume of the chamber to progressively pressurize the fuel therein and to increase the volume of the chamber to depressurize the chamber upon movement of the valve means in the opposite direction, and means subjecting the valve means to the fuel pressure in the first conduit means for moving the valve means to open the second outlet pressure relief valve to flow fuel therepast prior to the opening of the first outlet pressure relief valve.

4,301,826

COMBINATION SIPHON AND POSITIVE ACTION PUMP

Frank S. Beckerer, 134 Far Horizon Dr., Easton, Conn. 06612

Filed Jan. 7, 1980, Ser. No. 110,142

Int. Cl.³ F04F *10/00*

U.S. Cl. 137—149 **4 Claims**

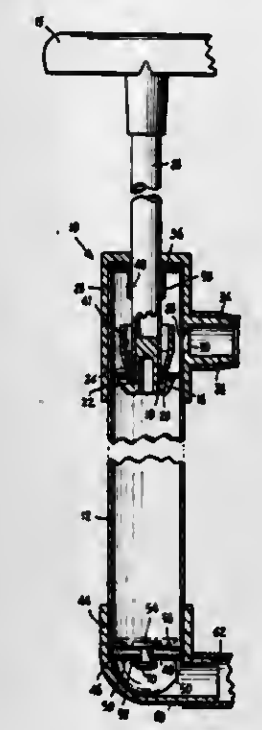

1. A combination vacuum lift pump and siphon for handling liquids, comprising in combination:
(a) a pump cylinder having an inlet adjacent its bottom, and an outlet spaced downward from its top,
(b) a discharge line connected to said outlet and depending therefrom,
(c) a plunger reciprocatable in the cylinder, including a piston movable from a location low in the cylinder to a location above the said outlet,
(d) said piston having a check valve operable to be closed when the plunger is lifted to raise the piston,
(e) an additional check valve connected with said inlet to restrain movement of liquid out of the cylinder through said inlet,
(f) reciprocative movements of said piston in portions of said cylinder below said outlet being operative to vacuum lift liquid into the cylinder through said inlet, and to force said liquid out of said outlet,
(g) said piston when raised in the cylinder above said outlet enabling a siphon action to occur whereby gravity flow of liquid through said discharge line will suck liquid into the cylinder through said inlet and past said inlet check valve,
(h) said additional check valve comprising an apertured valve plate disposed at the bottom of the cylinder and in the path of liquid flow,
(i) a valve membrane adjacent said plate and adapted to close off the apertures therein in response to the tendency for liquid to flow in one direction,
(j) said apertured valve plate and said membrane having central openings adapted to be aligned with one another,
(k) a securement thimble extending through said aligned openings and retaining the membrane against permanent dislodgement from the apertured valve plate,
(l) said thimble having spaced-apart annular shoulder means, one of said shoulder means being engageable with said plate and the other of said shoulder means being engageable with the membrane to enable the latter to occupy a position completely spaced from the plate under the action of liquid flowing into the inlet,
(m) the distance between said shoulder means being substantially in excess of the combined thicknesses of the plate and membrane in order to permit the latter to occupy said spaced position with respect to said plate, so as to present minimal impedement to the flow of liquid through said apertures when the membrane is spaced from the plate,
(n) said thimble being loosely carried by both the apertured valve plate and the membrane, so as not to interfere with movement of the latter away from the apertures under the action of liquid flowing therethrough.

4,301,827

ACCUMULATOR WITH PRECLOSING PREVENTER

Rajam R. Murthy, and Billy J. Rice, both of Houston, Tex., assignors to Koomey, Inc., Houston, Tex.

Filed Feb. 25, 1980, Ser. No. 123,988

Int. Cl.³ B67D *5/54;* F16K *21/16, 31/18*

U.S. Cl. 137—207 **3 Claims**

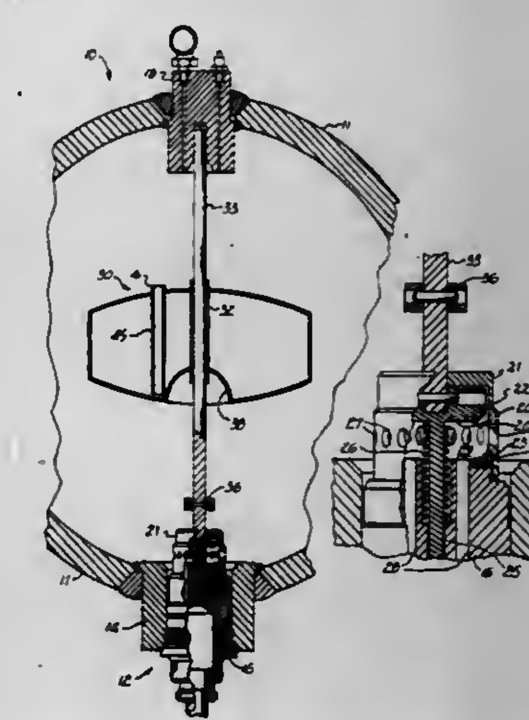

1. In a guided-float accumulator comprising a vessel in the shape of a sphere or cylinder adapted to contain a liquid topped by a highly pressurized gas, a mouth at the bottom of the vessel, fluid outlet means associated with the mouth for connection of the vessel and its contents to a hydraulic system such as used in an oil well blowout preventer, a spring-loaded normally open valve associated with the mouth in series with the fluid outlet means, an upstanding housing for the valve defining interiorly thereof a valving chamber, a valve seat at the bottom of the valving chamber and adapted to receive the seating portion of the valve to close the valve, said fluid outlet means including lateral ports opening from the interior of the vessel into said valving chamber and passageway means leading from said valve seat toward the exterior of said mouth, a float movable in the vessel along a vertical guide according to the level of the liquid fill within the vessel, said float being heavy enough to overcome the spring-loading of the shut-off valve and to thereby close off the shut-off valve and prevent the escape of pressurized gas from the vessel into the hydraulic system proper when emptying of the liquid from the vessel reaches completion, the bottom of said valve seating portion and said lateral ports being respectively shaped and aimed to direct outgoing liquid toward the bottom of said valve seating portion in the full open position of the valve to thereby impose an unbalanced upward component of dynamic thrust against the valve in addition to balanced radial components of dynamic thrust against the valve, whereby bernoulli effect forces generated by the flow of outgoing liquid are neutralized by said upward component of dynamic thrust, said upward imposing of dynamic thrust continuing during emptying of said vessel from any wholly or partially full condition at least to the point approaching completion of emptying at which the spring-loading of the valve commences to be overcome by said float.

4,301,828
PROTECTIVE COVER DEVICE
Timothy J. Martin, Jr., 1328 Pangborn Rd., Lynden, Wash. 98264
Filed Dec. 17, 1979, Ser. No. 104,154
Int. Cl.³ F16K *35/00;* B65D *25/00*
U.S. Cl. 137—381 20 Claims

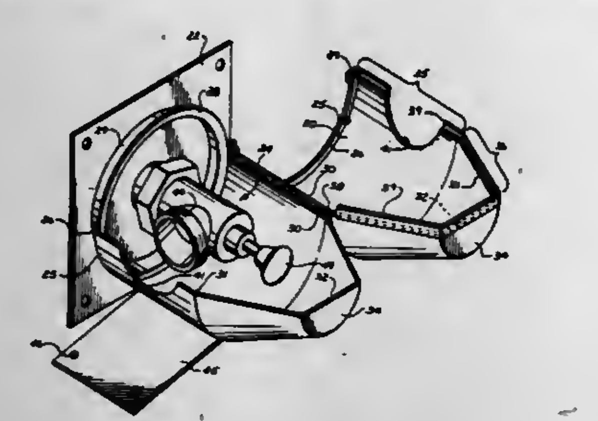

1. A protective cover device for use in maintaining the inlet and/or outlet valve means of a liquid storage tank in a contaminant-free state wherein the liquid storage tank has (a) valve means mounted therein and projecting outwardly therefrom and (b) a mounting flange defining an outwardly extending retaining lip mounted on the storage tank in surrounding relationship to the valve means, said protective cover device comprising, in combination: first and second mating complementary cover elements; and first and second mating complementary cover elements each having (i) first and second mating longitudinal edges, (ii) mating tranverse edges, and (iii), a base portion defining an inwardly extending retaining flange for fitting over the outwardly extending lip and removably securing said first and second mating complementary cover elements to the storage tank in surrounding relationship to the valve means thereon; means for hingedly securing said first mating longitudinal edges of said first and second mating complementary cover elements together; aperture defining means formed in one mating pair of said second mating edges and said mating transverse edges of said first and second mating complementary cover elements; first and second cover means for covering the aperture defined by said aperture defining means, said first cover means being imperforate for preventing ingress of contaminants into the interior of the protective cover device when the storage tank valve means are closed and said second cover means having a liquid conduit projecting therethrough and means for coupling said conduit to the valve means on the storage tank for preventing ingress of contaminants into the interior of the protective cover device when the storage tank valve means are open while at the same time permitting freedom of liquid movement through said conduit and the open valve means; and, means for removably securing one of said first and second cover means to said first and second mating complementary cover elements in overlying relation to said aperture defining means formed in said one mating pair of said second mating edges and said mating transverse edges of said first and second cover elements.

4,301,829
FLOOD CONTROL FOR A DISHWASHER
Richard A. Rowe, Louisville, Ky., assignor to General Electric Company, Louisville, Ky.
Continuation of Ser. No. 970,826, Dec. 18, 1978, abandoned. This application May 1, 1980, Ser. No. 145,525
Int. Cl.³ F16K *21/18, 33/00*
U.S. Cl. 137—387 9 Claims

1. A flood control arrangement for a washing machine of the type having a tub for collecting liquid and liquid in-flow means for providing a controlled in-flow of liquid to the tub from an external supply means, the in-flow means including an electrically operated solenoid valve and means directing liquid from the outlet of the electrically operated solenoid valve into the tub, said flood control arrangement comprising:

flood control valve means interposed in the liquid in-flow means downstream from the electrically operated solenoid valve, said flood control valve means including a plunger housing and a sealing plunger disposed in said plunger housing, said plunger housing being formed with an inlet chamber having an inlet port in fluid communication with the outlet of said electrically operated solenoid valve, and an outlet port in fluid communication with the interior of the tub, said plunger housing further including a valve seat formed between said inlet port and said outlet port, said sealing plunger having a head portion disposed in said inlet chamber between said inlet port and said outlet port and movable therein to a sealing position in

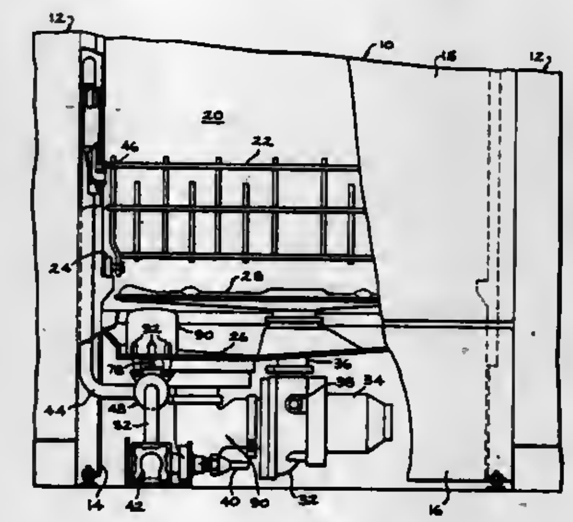

sealing engagement with said valve seat by pressure exerted on said head portion by liquid received in said inlet chamber, said sealing plunger being operative in its sealing position to prevent liquid flow into the tub;

a float disposed in the bottom region of the tub adapted to be raised to a predetermined flood position upon rising of the liquid level in the tub to a predetermined flood level approaching a flood condition in the tub;

blocking means including a block member drivingly connected to said float and normally engaging said sealing plunger to prevent movement of said sealing plunger to its sealing position when said float is below its predetermined flood position, said blocking member being operative to disengage said sealing plunger when said float moves to its flood position thereby enabling movement of said sealing plunger to its sealing position.

4,301,830
FRICTIONAL CONTROL OF A SINGLE LEVER FAUCET CONSTRUCTION
Robert J. Keller, III, Richmond, Va., assignor to KEL-WIN Manufacturing Company, Inc., Chester, Va.
Filed Jun. 3, 1980, Ser. No. 155,968
Int. Cl.³ F16K *25/00, 31/524*
U.S. Cl. 137—454.6 8 Claims

1. A single lever faucet construction of the type having

a. an underbody member;

b. a removable cartridge member at least partially received in a socket of the underbody member;

c. cartridge retaining means, with said cartridge member comprising

(1) a housing member,

(2) a ball cam member for substantially universal motion about a pair of intersecting axes,

(3) stem means for moving said ball cam member about said pair of intersecting axes,

(4) a pair of valve members actuated by an associated pair of cam follower members with said valve members communicating with sources of hot and cold water and a spigot, a third cam follower member being constantly in engagement with said ball cam member and serving to counterbalance the forces on said ball cam member by said associated pair of cam follower members and to prevent an inadvertent change of position of said ball cam member,

(5) a ball cam retaining member; and

d. spigot means in fluid communication with a mixing chamber means which is located downstream from and in fluid communication with said pair of valve members, the improvement which comprises providing a concave working surface on the third cam follower member which mates with a convex working surface on said ball cam member having a higher coefficient of friction than the coefficient of friction of either of the other two cam followers individually producing a frictional force by said third cam follower greater than the frictional force from the other two cam followers,

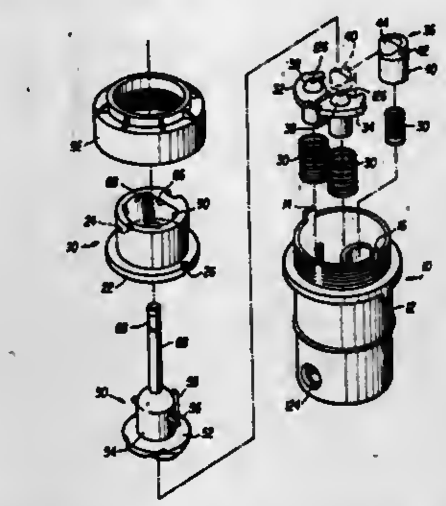

(l) wherein said third cam follower produces a frictional force sufficiently large so that it alone is sufficient to hold said stem means from wobbling.

4,301,831
PRESSURE REGULATING VALVE WITH DIFFERENTIAL PRESSURE RESPONSE
Thomas J. Lord, Dayton, Ohio, assignor to United Aircraft Products, Inc., Dayton, Ohio
Filed Mar. 17, 1980, Ser. No. 131,189
Int. Cl.³ F16K *31/365*
U.S. Cl. 137—489.5 8 Claims

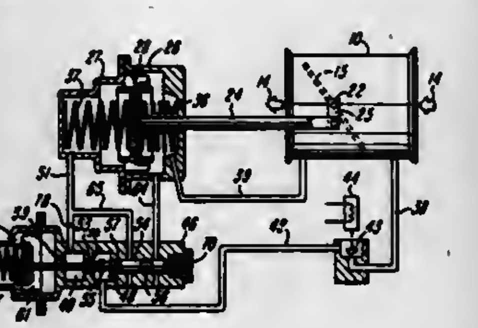

1. Valve apparatus including a housing and a regulating valve therein, said housing having a pressure fluid inlet and having an outlet for pressure fluid received at said inlet, normally higher pressure fluid being admitted at said inlet and under control of said valve discharging at a relatively lower pressure from said outlet, means for operating said regulating valve between open and closed positions, means applying continuing unbalanced forces to said operating means, the greater force being applied in a direction to close said valve, means for applying inlet and outlet pressures to said operating means in a manner to adjust said regulating valve in accordance with sensed pressure differences, said last named means including a pilot valve moving responsively to variations in inlet pressure, said pilot valve responding to inlet pressure decreased to a predetermined low value to vent the outlet pressure applied to said operating means and responding to inlet pressure decreased below said predetermined low value to vent the inlet pressure applied to said operating means.

4,301,832
PRESSURE CONVERTER VALVE
Dale R. Smith, 27944 Roy, St. Clair Shores, Mich. 48081
Filed May 19, 1980, Ser. No. 150,818
Int. Cl.³ F16K *15/04*
U.S. Cl. 137—512 6 Claims

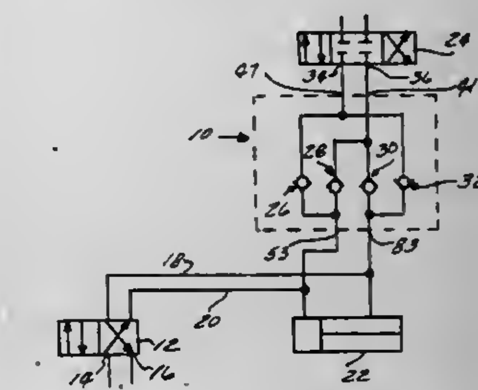

1. A pressure converter valve comprising:

a solid body;

a pair of first inlet ports and a pair of first outlet ports formed in said solid body;

said body including a plurality of interconnected bores;

a plurality of unidirectional fluid flow devices disposed within certain of said bores to form fluid flow paths between said first inlet and said outlet ports such that fluid flows in a first direction from one of said first outlet ports and in a second opposed direction through said other first outlet port regardless of the direction of fluid flow through said first inlet ports;

means for mounting a fluid control valve having inlet and outlet ports on said body of said pressure converter valve in fluid communication with the bores therein, the mounting means including first outlet ports in said body of said pressure converter valve being arranged to mate with said inlet ports of said fluid control valve;

said body having a pair of second inlet ports disposed adjacent to said pair of first outlet ports on said body and arranged to mate with said outlet ports of said fluid control valve; and

said body having a pair of second outlet ports respectively disposed in fluid flow communication with said second pair of inlet ports on said body and adapted to be connected to a fluid operated device controlled by said fluid control valve.

4,301,833
FLOW RESPONSIVE SAFETY VALVE
Robert A. Donald, III, 3003 Colonial Hill Rd., Louisville, Ky. 40205
Filed Oct. 5, 1979, Ser. No. 82,179
Int. Cl.³ F16K *15/00*
U.S. Cl. 137—521 6 Claims

1. A shut off safety valve for flow control of fluid liquids and gases through a conduit transport path responsive to flow rates exceeding predetermined limits, comprising, a plate valve member eccentrically mounted off center in said conduit path to establish by fluid flow therepast a stable position not substantially impeding fluid flow and engaging the conduit only by means of pivot members to pivot from an open position parallel to fluid flow through the conduit to a closed position substantially reducing the flow of fluid and presenting airplane wing type surface structure with a substantially flat surface on one side and curved surface on the other side responsive to

fluid flow at a flow rate above a predetermined threshold past both said surfaces for providing a lift to pivot the valve member in response to the fluid flow from the open position toward

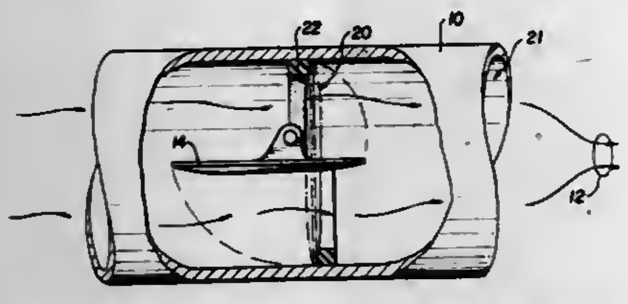

the closed position where it is aided in closure and kept closed by fluid pressure in the conduit as a function of the off center eccentric mount.

4,301,834
ADJUSTMENT METHOD PIPELAYER CONTROL SYSTEM
Glen S. Comer, Jr., Dunlap, and Henry Ejchler, East Peoria, both of Ill.
Filed Feb. 2, 1979, Ser. No. 73,409
Int. Cl.³ F16K *11/18, 35/02, 37/00;* **G05G** *9/02*
U.S. Cl. 137—556 **9 Claims**

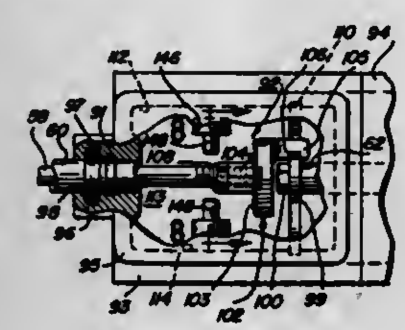

1. In an adjusting mechanism (92) for setting a valve spool (62) and an actuating lever (26) in a particular relationship, said valve spool (62) extending outwardly from a valve body (94), and said actuating lever (26) being pivotally mounted, the improvement comprising: means for connecting said extending end of the valve spool to said actuating lever, said means including first connecting means (99) and second connecting means (102), said first connecting means (99) being carried by said extending end of said valve spool (62), an indicator (110) located exterior of said valve body (94) along the path of movement of said extending end of said valve spool (62) to indicate a selected position of the valve spool (62) when said first connecting means (99) on the spool (62) aligns with said indicator (110), a cable (58) connecting said actuating lever (26) with said second connecting means (102), said second connecting means (102) connecting with said first connecting means (99) on said valve spool (62), means (70) for locking said actuating lever (26) in a selected position to coincide with the selected position indicated by said indicator (110), and means (92) for adjusting said second connecting means (102) relative to said cable (58) to set said first connecting means (99) on the valve spool (62) in alignment with said indicator (110) when said lever (26) and valve spool (62) are in their respective selected positions coinciding with said particular relationship.

4,301,835
SPEED CONTROL AND TRANSMISSION VENT VALVE
Cyril W. Habiger, Joliet, Ill., assignor to Caterpillar Tractor Co., Peoria, Ill.
Filed Dec. 26, 1979, Ser. No. 107,475
Int. Cl.³ F15B *13/02*
U.S. Cl. 137—596 **19 Claims**

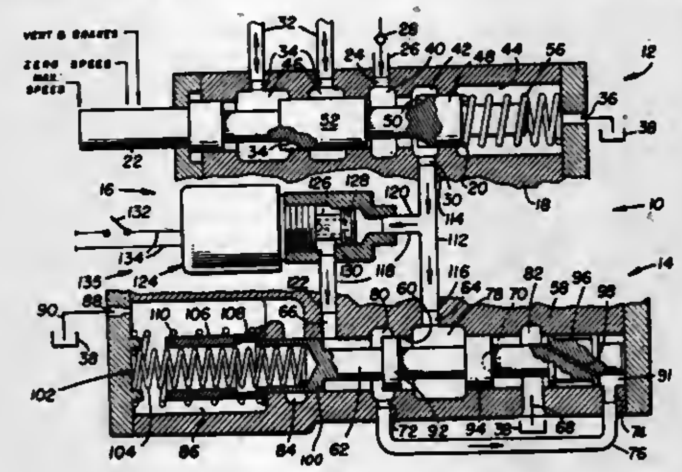

1. In a valve (10) having first valve means (12) for supplying pressurized fluid, said first valve means (12) including a pair (34) of pressure differential control openings and a spool (22) being constructed to control the pressure differential between said pair (34) of openings, and second movable valve means (14) for generating a fluid control signal, said second valve means (14) being movable in response to said pressurized fluid between an initial position at which said control signal is not generated and a final position at which said control signal is generated, the improvement comprising:

switch means (16) for controlling communication of said pressurized fluid between said first valve means (12) and said second valve means (14) to move said second valve means (14) from said initial position to said final position; and.

means (56) for biasing said spool (22) to maximize said pressure differential.

4,301,836
HOT AND COLD WATER SANITARY MIXING SET
Werner Hunziker, Unterkulm, Switzerland, assignor to Aktiengesellschaft Karrer, Weber & Cie, Switzerland
Filed Jan. 24, 1979, Ser. No. 6,212
Claims priority, application Switzerland, Jan. 26, 1978, 843/78
Int. Cl.³ F16K *11/06, 47/02*
U.S. Cl. 137—625.4 **8 Claims**

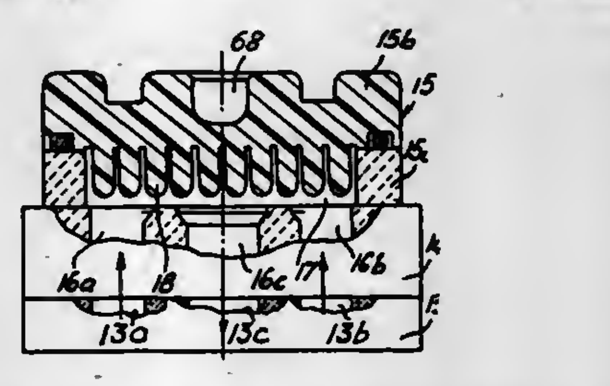

1. A control body for sanitary single handle mixing sets, for mixing hot and cold water, comprising, a housing having an outlet and a control chamber connected to said outlet, a top and intermediate disc in said control chamber which are relatively slidably movable in respect to each other and whose position relative to each other and to said housing is determinative for both the volume and ratio of the mixture of the hot and cold water, said housing having a separate hot and cold water

passage, said intermediate disc having intermediate hot and cold water passages which are alignable up to selected flow areas with said hot and cold water passages of said housing, with said top disc being provided with a surface channel through which separate hot and cold water passages of the underlying intermediate disc are connectable to said outlet, and wherein, said top and intermediate discs define a cross-flow channel therebetween having projections extending into said cross-flow channel from the bottom of said top disc up to a part of the total height of said channel and, transversely, to the flow direction, so as to provide numerous flow interruptions in said channel, said intermediate disc and an adjacnet disc portion of said top disc being made of ceramic material, said top disc including an uppermost disc portion with said adjacent disc portion being between said uppermost disc portion and said intermediate disc, said uppermost disc portion being made of a plastic material and defining the bottom of said cross-flow channel.

4,301,837
CONTROL VALVE
Rudolf Brunner, Baldham, Fed. Rep. of Germany, assignor to Heilmeier & Weinlein Fabrik für Oel-Hydraulik GmbH & Co., KG, Fed. Rep. of Germany
Filed Mar. 7, 1980, Ser. No. 128,281
Claims priority, application Fed. Rep. of Germany, Mar. 14, 1979, 2910029
Int. Cl.³ F15B *13/04*
U.S. Cl. 137—625.68 **5 Claims**

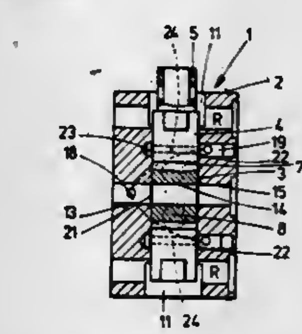

1. A control valve for a pressure medium system, particularly a high pressure hydraulic system, with a housing through which a slide hole passes and a piston slide which can be moved from a neutral position into a first, and if desired, a second control position, and which is pressure-balanced in all positions, with a pump connection opening to the slide hole and at least a consumer device connection opening staggered in the longitudinal direction of the hole relative to the pump connection opening, with a return flow connection opening associated with the consumer device connection opening, with a pocket for guiding the flow at the piston slide extending in the longitudinal direction in the area of the pump connection opening, which, in the first control position connects the consumer connection opening with the pump connection opening, while the control slide in the second control position connects the consumer device control opening with the return flow connection opening, and with a pressure-released circulation in the neutral position of the piston slide which flows via an adduction channel branched off from the pump connection, a radial hole in the piston slide in alignment with this, and a return flow channel in alignment with the adduction channel, characterised in that two first recesses (19*a*) are provided, open towards the slide hole (3), which—relative to the slide hole (3)—are situated diametrically opposite the opening of the adduction channel (13), though staggered symmetrically laterally relative to it and are permanently connected with the adduction channel (13) via connection channels (18*a*–*d*) which by-pass the slide hole (3) in the housing, in that opposite each first recess (19*a*) there lies a second recess (19*b*), also open towards the slide hole, and connected in the neutral position of the piston slide via a radial hole (24) in the piston slide with the first recess (19*a*), and in that the cross-sectional area (22; 23) of each recess (19*a*, *b*) corresponds to half the cross-sectional area (21) of the opening of the adduction channel.

4,301,838
MODULAR CONDUIT UNIT
Evan S. W. Bignell, Montreal, Canada, assignor to Domtar Inc., Montreal, Canada
Continuation-in-part of Ser. No. 757,341, Jan. 6, 1977, abandoned. This application Apr. 20, 1978, Ser. No. 898,410
Int. Cl.³ F16L *9/18*
U.S. Cl. 138—112 **6 Claims**

1. A modular conduit unit composed of at least four conduits secured together in spaced relationship with their longitudinal axis substantially parallel by at least 3 spaced star-shaped spacer elements interposed between the conduits, each of said star-shaped spacer elements being provided with four equally spaced hollow projections that terminate in an end wall and have curved side walls, said curved side walls of adjacent projections merging to form outer walls substantially in the form of circular cylindrical segments, an intergral substantially annular reinforcing member interconnecting said outer walls at points spaced inwardly from said end wall and defining an inner free space, said end wall, said curved side walls of each of said projections and said reinforcing member defining a free space in each of said projections, each of said end walls being provided with a line of weakness extending substantially axially of said cylindrical sections, the outer face of said cylindrical sections being in face-to-face relationship to and adhesively secured directly with said conduits and there being a weakness at each point of contact between said circular cylindrical segments and said annular member whereby a damaged conduit of said unit may be replaced by breaking the star-shaped spacer along the appropriate weakness areas.

4,301,839
HAND WEAVING APPARATUS
Yoshimasa Yamaguchi, and Akira Iino, both of Kodaira, Japan, assignors to Silver Seiko, Ltd., Kodaira, Japan
Filed Jan. 13, 1979, Ser. No. 48,036
Claims priority, application Japan, Jan. 21, 1978, 53/85303[U]
Int. Cl.³ D03D *29/00*
U.S. Cl. 139—29 **12 Claims**

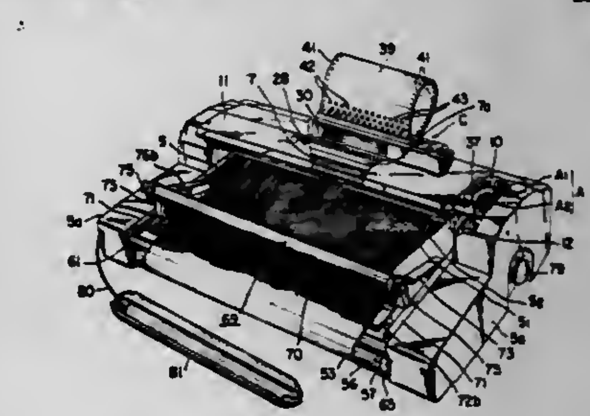

1. In a hand weaving apparatus having a warp yarn let-off roller, a woven fabric take-up roller, a shedding arrangement

for forming a shed with warp yarns intermediate between said let-off and take-up rollers, means for inserting a weft yarn through the shed formed, and a manually operable reed means mounted for back and forth movement for beating motion for the weft yarn inserted, the improvement wherein said shedding arrangement comprises a plurality of heald elements adapted to individually engage with the warp yarns intermediate between said let-off and take-up rollers, bed means having said heald elements mounted therein for individual movement between first and second end positions along their own paths which are inclined relative to the direction of movement of said reed means, manually operable selector means manually operable to selectively position said heald elements to said first and second end positions to locate said elements to different positions relative to the passage of said reed means thereby to cause the warp yarns to form a shed thereamong, the warp yarns being arranged to run at one side of said paths of said heald elements, and holding means operable to hold said heald elements to said end positions positioned thereto by said selector means.

4,301,840

FIXED TURRET SUBSEA HYDROCARBON PRODUCTION TERMINAL

Martin B. Jansen, Agoura, Calif., assignor to Amtel, Inc., Providence, R.I.

Filed Jan. 18, 1979, Ser. No. 49,960

Int. Cl.³ B65B *3/04*; F16L *39/04*

U.S. Cl. 141—98 **13 Claims**

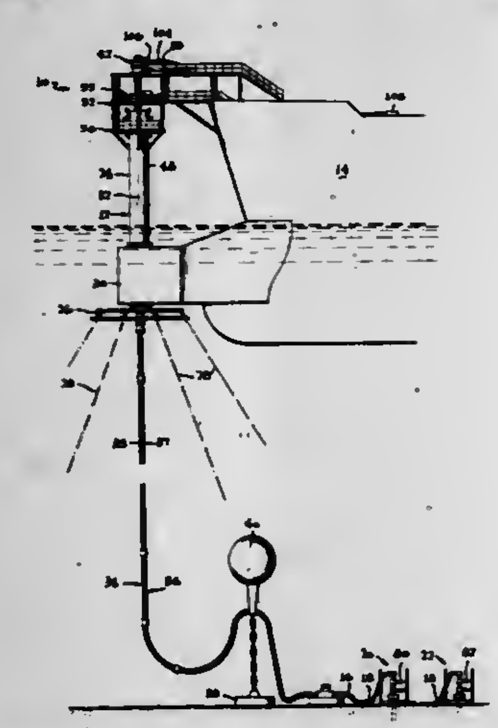

1. In an offshore undersea hydrocarbon production terminal installation which includes a transfer structure that lies substantially at the sea surface and is anchored to the sea floor and connected to a floating storage vessel, and a fluid conduit which extends from the sea floor through the transfer structure to the vessel, to carry high pressure fluid from an oil well at the sea floor to the vessel, and wherein the vessel and a portion of the transfer structure must be allowed to rotate without limit about a vertical axis, the improvement wherein:

said transfer structure includes a nonrotatable frame anchored to the sea floor so it cannot rotate without limit about a vertical axis, and a rotatable frame which can rotate without limit about a vertical axis and which is connected to the vessel;

said fluid conduit includes a fluid swivel having a nonrotatable swivel portion substantially fixed to said nonrotatable frame and a rotatable swivel portion, and said fluid conduit also includes a rotating conduit portion connecting the rotatable swivel portion to the vessel; and

said fluid conduit also includes a riser conduit portion extending from substantially the sea floor to said transfer structure, and a pressure reducing means mounted on said nonrotatable frame and connected between said riser conduit portion and said nonrotatable fluid swivel portion, for reducing the pressure of fluid that is delivered to the fluid swivel, whereby to enable a moderate pressure fluid swivel to be used to carry initially high pressure fluid from the sea floor to the vessel.

4,301,841

MULTIPURPOSE CONTAINER

Kiyoshi Sandow, 8535 Market St., Houston, Tex. 77029

Filed Oct. 22, 1979, Ser. No. 86,745

Int. Cl.³ B65B *3/04*

U.S. Cl. 141—98 **8 Claims**

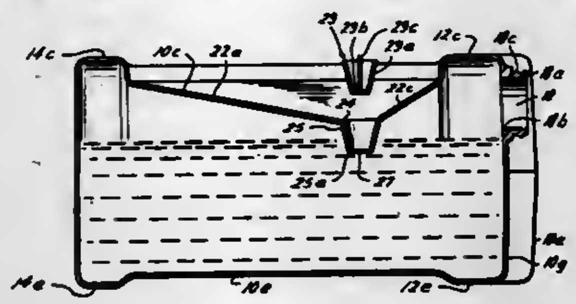

3. A unitary multipurpose container for storing, transporting, collecting and disposing of fluids such as motor oil and the like comprising, in combination:

an enclosed rectangular shaped container body having an oppositely disposed top wall and bottom wall, and generally rectangular shaped first, second, third and fourth side walls joining said top wall and bottom wall and each other for forming an interior cavity, said first side wall oppositely disposed to said third side wall and said second side wall oppositely disposed to said fourth side wall;

said first side wall formed with a substantially concave surface for collecting fluids and directing their flow interior of said cavity;

said container body designed to rest on said bottom wall to maintain said container body in an upright position when fluids such as motor oil and the like are stored in said container and to rest on said third side wall when fluids such as spent motor oil and the like are to be collected in said container;

a first threaded cylinder projecting outwardly from the top wall of said container body and in communication with said interior cavity of said container body to act as an outlet when fluids such as motor oil and the like are stored in said container;

a first cap adapted to cooperate with said first threaded cylinder for releasably sealing said container body when transporting or storing fluids such as motor oil or the like;

a second cylinder projecting inwardly from said first side wall to provide communication with said interior cavity of said container body for fluids such as spent motor oil and the like directed by the substantially concave surface when said container is used to collect fluids;

a membrane at the lower end of said second cylinder to seal said second cylinder when said container is initially used to store and transport fluids such as motor oil and the like, operable to be perforated when said container body is placed on its third side wall to collect fluids such as spent motor oil and the like;

a second cap operable for releasably sealing said second cylinder after fluids such as motor oil and the like have been collected in said container for disposal; and

a handle formed in a side wall of said container body to provide means for transporting the container and to facilitate placement of the container when fluids such as spent motor oil and the like are to be collected.

4,301,842

FILLING STATION FOR PLEAT-SIDED BAGS

Gustav Kuckhermann, Achern, Fed. Rep. of Germany, assignor to Icoma Packtechnik GmbH, Achern, Fed. Rep. of Germany

Filed Nov. 21, 1979, Ser. No. 96,346

Claims priority, application Fed. Rep. of Germany, Dec. 1, 1978, 2852022

Int. Cl.³ B65B *1/04*

U.S. Cl. 141—114 **13 Claims**

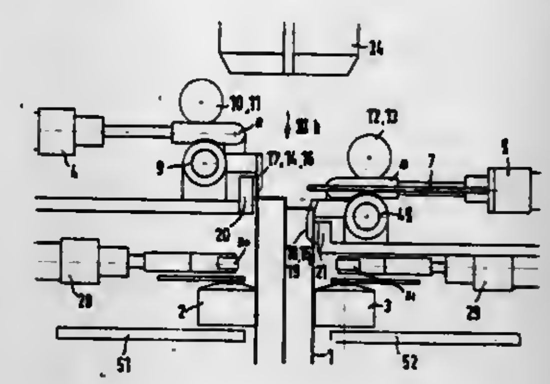

1. A filling station for filling pleat-sided bags, comprising means for transporting a bag in flat form to a filling position, said bag being of the type having a closed bottom, unpleated front and rear faces and pleated side faces joined thereto to define an openable mouth opposite to said bottom, a pair of elongated clamping beams extending across the exteriors of the nonpleated front and rear faces of the bag in directions substantially parallel to said nonpleated faces when said bag is in said filling position, a plurality of spreading members disposed adjacent each of the opposing nonpleated front and rear faces of said bag when said bag is in said filling position, said spreading members having claws movably mounted thereon and adapted to engage the opposing interior edges of said bag along the nonpleated faces of said bag adjacent to its said openable mouth, means for moving at least some of the claws on each side of said bag away from one another along paths substantially parallel to the directions of elongation of said clamping beams thereby to clamp the edges of said bag adjacent its openable mouth between said claws and said clamping beams at a plurality of spaced locations along the unpleated rear and front faces of the bag, means for moving the spreading members together with their associated clamping beams on opposite sides of said bag away from one another in directions transverse to the planes of the front and rear faces of the bag thereby to at least partially unfold the pleated side faces of said bag while opening the mouth of said bag, a filling funnel outside of said bag adjacent its said mouth for filling said bag via the mouth of said bag, means for moving said funnel into the opened mouth of said bag, further clamping means disposed adjacent the exterior of said bag, and means for moving said further clamping means into engagement with the exterior of said bag to clamp the faces of said bag to said filling funnel during the filling of said bag.

4,301,843

PACKAGING APPARATUS

Roger H. Stohlquist, Rockford, Ill., assignor to Anderson Bros. Mfg. Co., Rockford, Ill.

Filed Nov. 9, 1979, Ser. No. 92,706

Int. Cl.³ B65B *3/04*

U.S. Cl. 141—172 **11 Claims**

1. In a packaging apparatus having a filling station, a downwardly opening nozzle at the filling station for dispensing a stream of semi-fluid material, means for advancing containers along a path below the nozzle, container elevator means at the filling station engageable with the underside of a container for elevating a container into a preselected raised position in which the upper portion of the container extends around the lower portion of the nozzle, the improvement comprising container feed roller means, means mounting the feed roller means for rotation about a generally horizontal axis alongside the nozzle and for shifting movement toward and away from the nozzle, means for driving the feed roller means in a direction to feed a container upwardly along the nozzle, and means for shifting the feed roller means toward the nozzle to engage

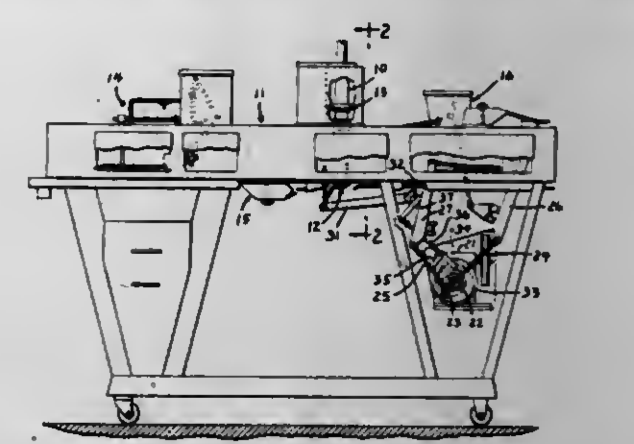

a container when the latter is elevated by the container elevator means to said preselected raised position to further elevate the container around the nozzle and for thereafter shifting the feed roller means away from the nozzle to allow the container to move downwardly as it is filled.

4,301,844

METHOD AND CHIP-MANUFACTURING EDGING-MILL FOR EDGING BOARD

Harding Tannerstal, Söderhamn, Sweden, assignor to AB A. K. Eriksson, Mariannelund, Sweden

Filed Mar. 20, 1980, Ser. No. 132,342

Claims priority, application Sweden, Mar. 27, 1979, 7902745

Int. Cl.³ B27C *9/00*

U.S. Cl. 144—3 R **10 Claims**

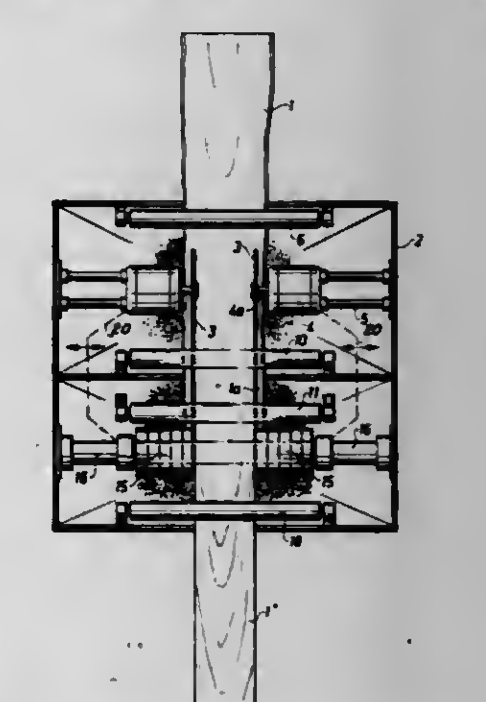

1. A method of edging boards and reducing wane severed therefrom to chip form, comprising: feeding a board to a circular sawblade to separate the wane from said board in the form of a rib connected to the board just in advance of the sawblade in the direction of feed, and advancing said board to progressively bring said rib into cutting engagement with chipping means downstream from said sawblade as said rib is formed.

4,301,845
TREE SHEAR
Lowell A. Paul, and Alan Moss, both of 1334 St. Paul St., Kelowna, British Columbia, Canada (V1Y 2E6)
Filed Feb. 4, 1980, Ser. No. 118,159
Int. Cl.³ A01G *23/08*
U.S. Cl. 144—34 E **33 Claims**

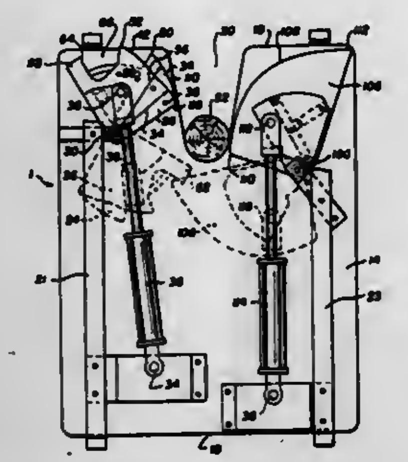

1. A tree shear comprising:
a base having a position for receiving a tree trunk;
undercutting means mounted on the base for making a groove extending through the tree trunk from one side of the tree thereby inducing a bending of the tree trunk and putting under tension fibres in the tree trunk near a side thereof opposite the one side;
means to move the undercutting means to form said groove and to remove said undercutting means from the formed groove; and
shearing means mounted on the base for shearing the tree from said opposite side after said undercutting means has been removed from said groove.

4,301,846
MACHINE FOR PRODUCING WOOD SHAVINGS FROM CHIPS
Torsten L. Berggren, Rosenlidsgatan 13, S-571 00 Nässjö, Sweden
Filed Mar. 18, 1980, Ser. No. 131,102
Claims priority, application Sweden, Mar. 27, 1979, 7902738
Int. Cl.³ B27C *1/00*
U.S. Cl. 144—162 R **10 Claims**

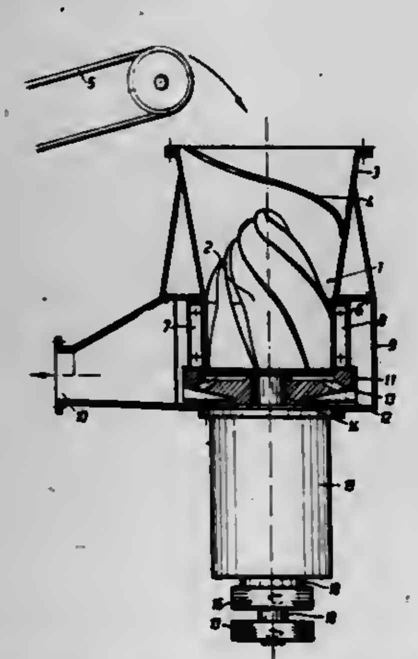

1. A machine for producing thin shavings from chopped cellulose chips, said shavings being cut substantially in the fiber direction and having a large surface area relative to their thickness, said machine comprising:
a first part (6) having at least one knife means (7,8); and
a second part (1) having at least one anvil surface (21) for pushing the chips;
said first and second parts (6,1, respectively) being arranged to rotate relative to one another about an axis;
said second part (1) including a center member (1) extending in the direction of said axis and having open, helical conveying channels (2) therein for feeding the chips in the direction of said axis, said channels (2) extending axially of said center member (1) and being helically formed thereon, said channels each communicating with at least one anvil surface (21);
said first part (6) being in the form of a cylindrical ring (6) surrounding said center member (1), said cylindrical ring (6) enclosing said channels (2) over at least a part of their axial length to define cutting zones, said channels (2) feeding said chips into said cutting zones between said center member and said cylindrical ring and into cutting engagement with said at least one knife and anvil surface; and
the depth of said channels (2) varying in the peripheral direction of said center member (1) such that said channels (2) are deeper at the leading edge than at the trailing edge as seen in the relative rotational direction of said center member in relation to said cylindrical ring.

4,301,847
ATTACHMENT FOR CONICAL WOODSPLITTER
Arthur C. Stickler, 321 N. 8th St., Gunnison, Colo. 81230
Filed Dec. 20, 1979, Ser. No. 105,730
Int. Cl.³ B27L *7/00*
U.S. Cl. 144—194 **1 Claim**

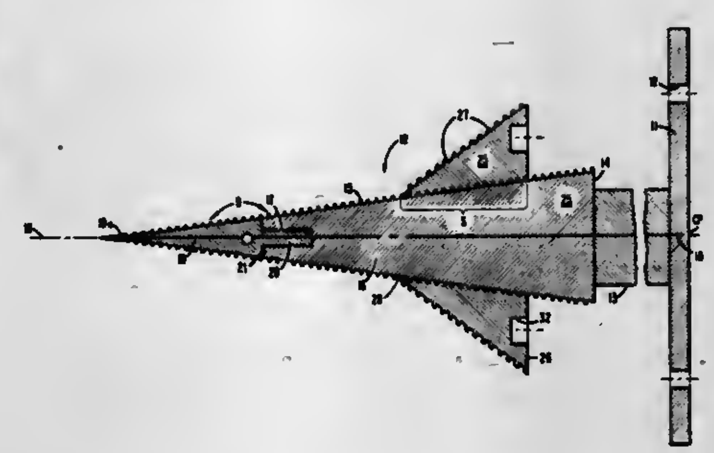

1. In an improved woodsplitter device including a conically threaded screw having a tip and a base, said screw being rigidly attached to an adapter plate that is removably attachable to an engine-driven wheel of an automotive vehicle for imparting a rotational movement to said woodsplitter, wherein the improvement comprises: a frusto-conically shaped externally threaded body defining an outer frusto-conical surface and having a flat base surface and an internally threaded hole extending axially through said body, said hole being tapered to define an inner frusto-conical surface, said outer frusto-conical surface converging axially toward said inner frusto-conical surface so as to approximately coincide with said inner frusto-conical surface and said body hole adapted to fit over the tip of said screw, said body threadably connected to a portion of said conically threaded screw in a meshed relationship.

4,301,848
BAGS FOR CONTAINING BULK MATERIAL
John P. Beaven, and Beaumont B. Varcoe, both of Par, England, assignors to English Clays Lovering Pochin & Company, Ltd., St. Austell, England
Filed Dec. 12, 1979, Ser. No. 102,757
Claims priority, application United Kingdom, Dec. 15, 1978, 48737/78
Int. Cl.³ B65D *33/02*
U.S. Cl. 150—1 **20 Claims**

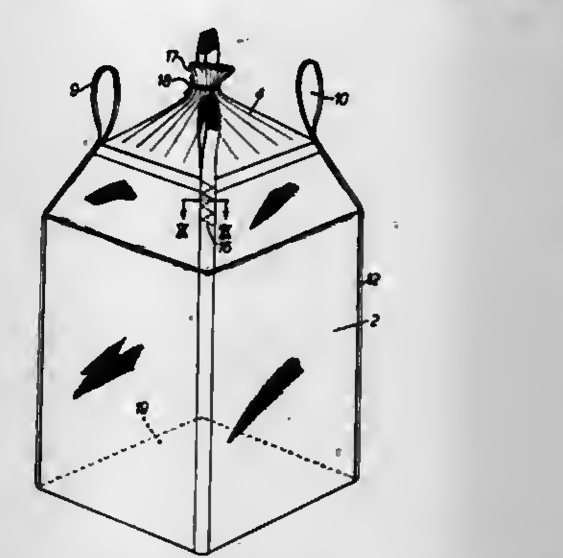

1. A bag suitable for containing material in bulk, the bag comprising:
a bag portion defining a mouth, and
at least three lifting loops, each providing an opening adjacent the mouth of the bag portion and having two legs extending from the opening,
both legs of each lifting loop being attached to the bag portion at a location where the material of the bag portion is folded to provide at least three overlapping layers of material to which the legs are secured, at least one of the legs of at least two of the lifting loops extending substantially to the bottom of the bag portion.

4,301,849
REVERSIBLE BAG
Zita Litwack, New York, N.Y.; Barry W. Hoberman, Hazlet, N.J., and Emil R. Najman, Brooklyn, N.Y., assignors to Joseph Novogrodsky, New York, N.Y.
Filed Oct. 22, 1979, Ser. No. 83,714
Int. Cl.³ A45C *13/26*
U.S. Cl. 150—33 **9 Claims**

1. A reversible bag having inner and outer portions with finished surfaces, wherein the improvement comprises a reversible zipper to open and close an opening into an interior of said reversible bag, and wherein handles are attached to said inner portion and to said outer portion of said reversible bag, and at least one pocket is provided on at least one surface of the reversible bag.

4,301,850
PROCESS FOR THE MANUFACTURE OF TIRES BY MOLDING AND TIRES OBTAINED BY THIS PROCESS
Andre Schneider, St.-Hyppolyte; Jean-Pierre Cesar, Sayat, and Jacques Gouttebessis, La Mouteyre, all of France, assignors to Compagnie Generale des Etablissements Michelin, Clermont-Ferrand, France
Filed Jun. 26, 1980, Ser. No. 163,336
Claims priority, application France, Jun. 29, 1979, 79 17413
Int. Cl.³ B60C *9/18;* B29H *17/04*
U.S. Cl. 152—361 R **21 Claims**

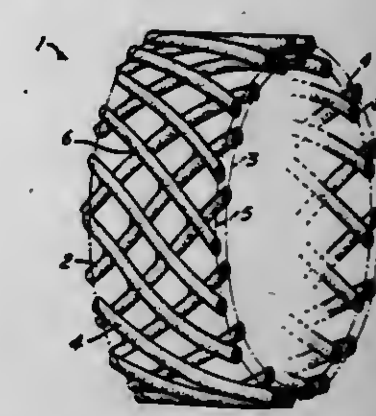

1. A process of manufacturing tires having a crown reinforcement which comprises filling a core mold with one or more liquid or pasty materials and solidifying the materials in the core mold, characterized by prior to the filling of the mold deforming by expanding or contracting and then placing in the mold at least one annular net of suitable width, continuous in the circumferential direction of the tire and elastically deformable so that in deformed state its developed length is equal to the developed length of the crown reinforcement, said net being formed of two superimposed plies of wires parallel in each ply and crossed from one ply to the other at an angle at most equal to 90° with respect to the circumferential direction of the tire, at least the outside of the wires being formed of an elastic and weldable material permitting welding of the wires of one ply to those of the other ply at the points where they intersect, the net being placed in the mold with its edges equidistant from the equatorial plane of the tire.

4,301,851
COMBINED MOVABLE SHUTTER AND AWNING
Merrill J. Gitkin, Franklin Lakes, N.J., assignor to Gitkin International, Totowa, N.J.
Filed Aug. 3, 1979, Ser. No. 63,414
Int. Cl.³ E04F *10/00*
U.S. Cl. 160—46 **4 Claims**

1. A combined shutter and awning for a doorway and door assembly comprising a housing mounted immediately above the doorway, depending side tracks, a shutter assembly movably guided by said tracks, means hingedly supporting the upper ends of the tracks for swinging movement about a generally horizontal axis adjacent the upper edge of the doorway for movement of the tracks and shutter assembly to an outwardly extending generally horizontal position in relation to the doorway, and support means hingedly connected to the outer ends of the side tracks for supporting the outer ends of the side tracks when in their extended position whereby the shutter assembly between the side tracks will form an awning for the doorway, said support means for the outer ends of the tracks

being in the form of vertically disposed support members generally parallel to the doorway but spaced therefrom to provide access to the doorway from the front and both sides of the doorway and enable unimpeded passage of individuals from side-to-side of the awning with the space enclosed by the side tracks, support members, doorway and supporting structure being free of obstructions, said doorway providing access between the exterior and the interior of a building with a door forming a closure for the doorway, said shutter assembly when in the shutter mode and extended completely covering doorway and door thereby providing security to prevent unauthorized passage through the door, said supporting means for the outer ends of the tracks including support posts, hinge means connecting the upper end of each support post to the outer end

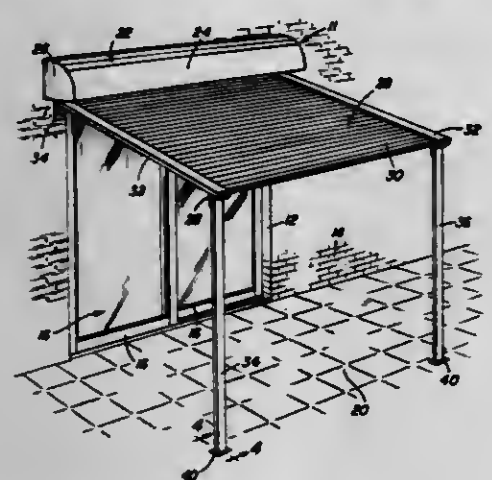

portion of a side track, and means spaced outwardly of the doorway engaging the lower end of the post to anchor it to a supporting surface for securely supporting the outer end of the shutter assembly when it is in awning mode, said supporting post being slightly shorter in length than the side track thereby supporting the side tracks in slightly downwardly and outwardly inclined relation to the inner end of the side tracks when in the awning mode, said means supporting the side tracks for pivotal movement including a hinge structure supporting the inner end of the side tracks from the housing to enable the shutter assembly to be retracted and extended when the side tracks are in vertical position and to enable the shutter assembly to be moved to its awning mode by pivoting the side tracks outwardly and upwardly and swinging the support posts downwardly to a substantially vertical position.

4,301,852

HEAVY DUTY TRAVERSE ROD AND CURTAIN SUPPORT COMBINATION

Paul E. Comeau, Warwick, R.I., assignor to Kenney Manufacturing Company, Warwick, R.I.

Continuation-in-part of Ser. No. 23,071, Mar. 23, 1979. This application Jun. 4, 1979, Ser. No. 45,123

Int. Cl.[3] **A47H** *5/032*

U.S. Cl. 160—345 **1 Claim**

1. A traverse rod for supporting curtains comprising:
an elongated hollow rod having an elongated slot longitudinally thereof,
a pair of master carriers movable in said slot for supporting a curtain,
a draw cord assembly comprising first and second loops, each of which has first and second free ends, one loop of which extends outwardly of said rod to serve as a means for drawing the curtain open and closed,
means for securing the first free end of said first loop to a first master carrier of said pair,
means for securing the first free end of said second loop to a second master carrier of said pair,
pulley means at one end of said rod for receiving said first loop and doubling it back within said rod but with a portion of said first loop extending outwardly of said rod,
pulley means at the other end of said rod for receiving said second loop and doubling it back within said rod,
means on said second carrier for adjustably securing the free second end of said first loop to said second carrier, and

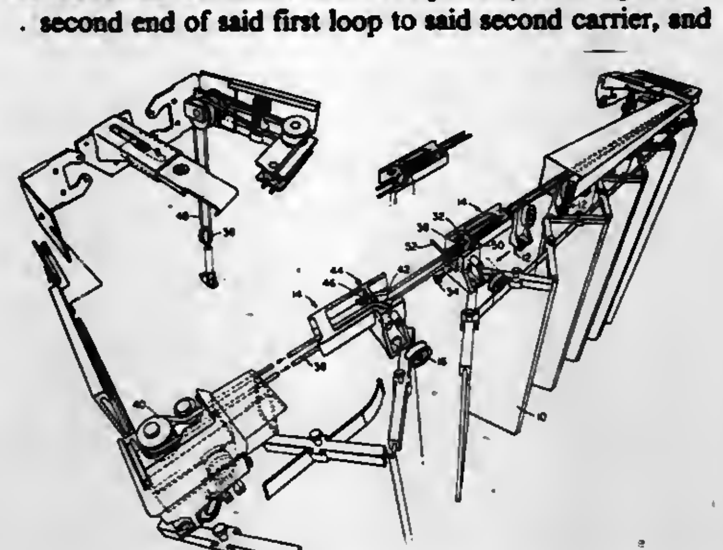

means on said first carrier for adjustably securing the free second end of said second loop to said first carrier, whereby the longitudinal position of said master carriers is determined by adjustment of the second ends of said loop.

4,301,853

STRETCHER FOR THE MOUNTING AND STRETCHING OF A CANVAS, PARTICULARLY FOR FINE ART

Jean A. Vidal, 11 Place de la Porte Champerret, 75017 Paris, France

Filed Oct. 22, 1979, Ser. No. 87,140

Claims priority, application France, Oct. 24, 1978, 78 30233

Int. Cl.[3] **A47G** *5/00;* **E06B** *9/24;* **D06C** *3/08*

U.S. Cl. 160—374.1 **8 Claims**

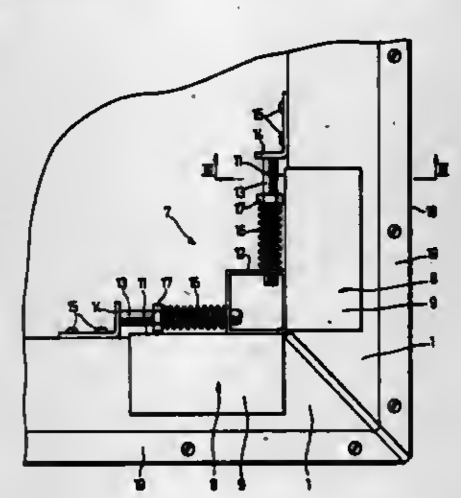

8. A stretcher for mounting and stretching an artist's canvas, comprising,
four side pieces having mitered ends,
four corner connector assemblies for interconnecting the side pieces,
each of said connector assemblies including a pair of perpendicularly interconnected arms of U-shaped cross section which slidably receive two of the side pieces and a pair of support brackets each of which projects inwardly from a respective one of said arms,
a plurality of connecting brackets affixed to the side pieces and projecting inwardly therefrom, and adjustable resilient means each mounted between a support bracket and a connecting bracket.

4,301,854

CHILL ROLL CASTING OF CONTINUOUS FILAMENT

John R. Bedell, Sparta; Naim Hemmat, Meadham, both of N.J., and Donald E. Polk, Boston, Mass., assignors to Allied Corporation, Morris Township, Morris County, N.J.

Continuation of Ser. No. 839,546, Oct. 5, 1977, Pat. No. 4,184,532, which is a continuation of Ser. No. 683,121, May 4, 1976, abandoned. This application Sep. 4, 1979, Ser. No. 72,494

The portion of the term of this patent subsequent to Jan. 22, 1997, has been disclaimed.

Int. Cl.[3] **B22D** *11/06*

U.S. Cl. 164—479 **7 Claims**

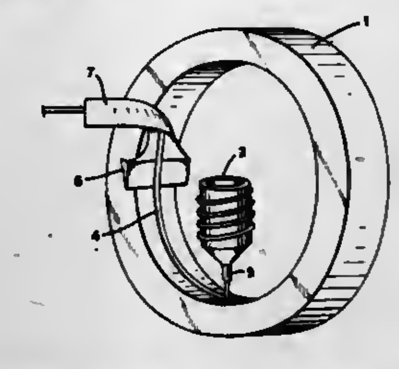

1. A continuous process of forming filament of amorphous metal from a molten metal alloy capable of forming an amorphous structure comprising:
(a) depositing a stream of the molten metal alloy onto the inner surface of a rotating annular chill roll having an inner surface parallel to its axis of rotation,
(b) quenching the molten metal in contact with said surface at a rapid rate to effect solidification into a continuous solid amorphous metal filament,
(c) stripping the amorphous metal filament from said surface, and
(d) continuously guiding the stripped filament away from said surface.

4,301,855

APPARATUS FOR PRODUCING METAL RIBBON

Hideo Suzuki, Katsuta; Isao Ikuta, Iwaki; Sadami Tomita, Katsuta, and Joo Ishihara, Hitachi, all of Japan, assignors to Hitachi, Ltd., Research Development Corporation of Japan and Hitachi Metals, Ltd., both of Tokyo, Japan

Filed Dec. 11, 1979, Ser. No. 102,557

Claims priority, application Japan, Jun. 23, 1978, 53/75356

Int. Cl.[3] **B22D** *11/06*

U.S. Cl. 164—254 **12 Claims**

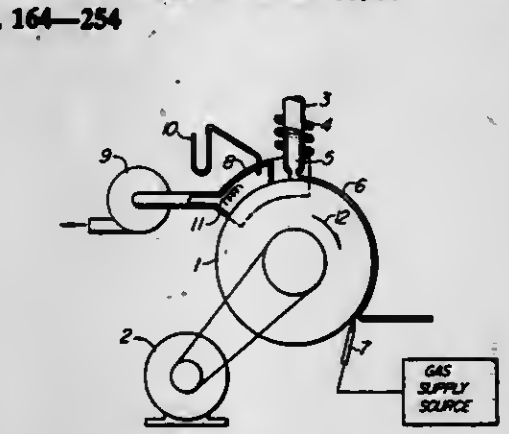

1. In an apparatus for producing a metal ribbon, comprising rotary roll, means for driving said rotary roll and a nozzle through which a molten metal is poured onto the outer peripheral surface of said rotary roll; the improvement comprising gas jetting means at a pre-selected position adjacent to the outer peripheral surface of said rotary roll for jetting a gas substantially tangential to said outer peripheral surface in a direction substantially opposite to the direction of rotation of said rotary roll to thereby peel said ribbon away from the roll peripheral surface, said position being disposed at a circumferential distance from the nozzle in the direction of rotation of the roll sufficient to enable the ribbon to be solidified on said rotary roll.

4,301,856

PERMANENT MOLD FOR GRAVITY CASTING OF LIGHT ALLOY CYLINDER HEADS

Gaetano DiRosa, Strada Torino, 50, Pino Torinese (Torino), Italy

Filed Oct. 12, 1979, Ser. No. 84,461

Int. Cl.[3] **B22D** *33/04*

U.S. Cl. 164—340 **6 Claims**

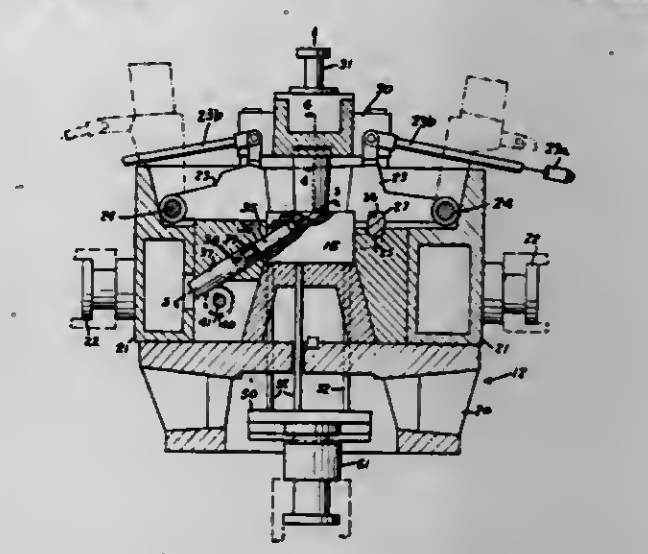

1. A permanent mold for gravity casting of light alloy cylinder heads comprising,
a base,
a pair of lower platens slidably mounted on said base for movement horizontally toward and away from one another cooperating to define a mold cavity when they are in position adjacent one another,
means on said platens adapted to be selectively engaged by actuating mechanisms associated with the casting machine for moving said platens into and out of position,
end blocks associated with said platens,
at least one said end block having an adjustable portion movable horizontally toward and away from the platens, said portion having the metal runner therein through which the molten metal is introduced.

4,301,857

OSCILLATING MOLD CASTING APPARATUS

Calvin Rushforth, Andover, Mass., assignor to Kennecott Corporation, Stamford, Conn.

Filed Jan. 31, 1980, Ser. No. 117,028

Int. Cl.[3] **B22D** *11/04*

U.S. Cl. 164—416 **47 Claims**

1. An apparatus for the continuous casting of metal rod comprising:
a support structure for supporting an oscillating mold assembly;
a vessel containing a metallic melt;
an oscillating mold assembly including:
(1) a fluid coolable mold assembly in communication with said metallic melt for the continuous formation of a cast rod from said melt,
(2) a movable carriage assembly for supporting said mold assembly, said carriage assembly being constrained to move in the same and reverse direction as a rod being continuously cast,
(3) means for oscillating said carriage assembly and thus oscillate the mold assembly in the same direction and in a reverse direction of a rod being cast, said means for oscillating said carriage assembly including at least one rail oriented in the same direction as the rod to be cast and at least one roller which engages said rail, said combination of at least one roller and at least one rail being the means

by which said oscillating mold assembly is movably supported by said support structure, and,

(4) a hydraulic cylinder having a piston with said hydraulic cylinder being supported by said support structure and said piston being connected to said carriage assembly so that movement of the piston is transmitted to the carriage

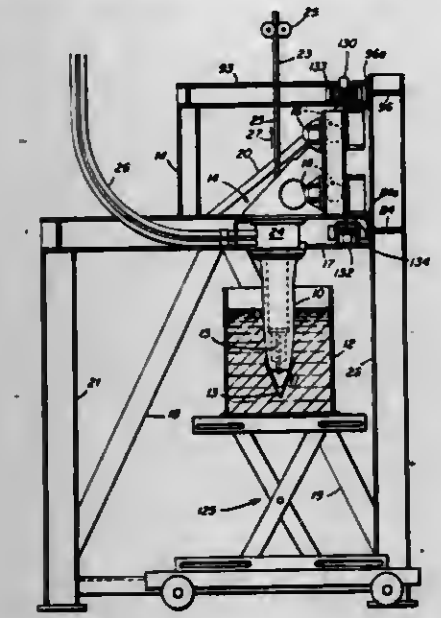

assembly to cause the carriage assembly to oscillate along said at least one rail;

means for drawing the metallic melt through said mold assembly to continuously produce a rod; and,

means for delivering a coolant to said mold assembly while said mold assembly is oscillating.

4,301,858

ADJUSTING MEANS OF ROTARY REGENERATIVE SECTOR PLATE HEAT EXCHANGERS

Karl H. Mock, Neckargemuend, Fed. Rep. of Germany, assignor to Svenska Rotor Maskiner AB, Nacka, Sweden

Continuation-in-part of Ser. No. 70,796, Aug. 29, 1979, abandoned. This application Mar. 6, 1980, Ser. No. 127,765

Int. Cl.³ F28D *19/00*

U.S. Cl. 165—9 **7 Claims**

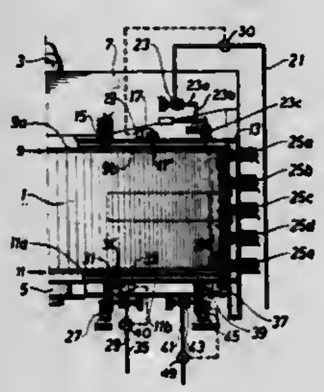

1. In adjusting means for a rotary regenerative heat exchanger, the head exchanger comprising a regenerator body and ducts, said regenerator body and ducts being rotatable relative to each other, said regenerator body having sector plates, sector plate sealing members and at least one circumferential metal flange supported by said regenerator body:

said adjusting means comprising adjusting linkages coupled to said sealing members for adjusting said sealing members, linkage actuating means coupled to said adjusting linkages of said sealing members and which, in response to a thermal deformation of the regenerator body to dish-like shape of the end surfaces of the regenerator body and the corresponding variation of the sealing spaces, actuates said adjusting linkages of said sealing members so as to maintain a predetermined sealing space, and at least one sensing means coupled to each sealing member, adjacent said circumferential metal flange supported by the regenerator body;

the improvement wherein said sensing means comprises an electrically conducting sensing element (56) which is insulated from the respective sealing member and which is positioned close to but spaced from said circumferential metal flange, a control circuit, (19; 39; 33) electrically coupled to said sensing element (56) and to said circumferential metal flange (17', 31', 37') for generating control signals indicating variations of electrical capacity which result in response to variations of the distance between said circumferential metal flange and said sensing element (56), said control signals being supplied to said linkage actuating means for controlling the adjusting of said sealing members (9; 11).

4,301,859

HOT WATER SURFACE HEATING DEVICE

Karl Hollemann, Laubaner Strasse 10, 3207 Harsum 1, Fed. Rep. of Germany

Filed May 14, 1979, Ser. No. 39,009

Int. Cl.³ F28D *19/00;* **F28F** *3/00*

U.S. Cl. 165—49 **16 Claims**

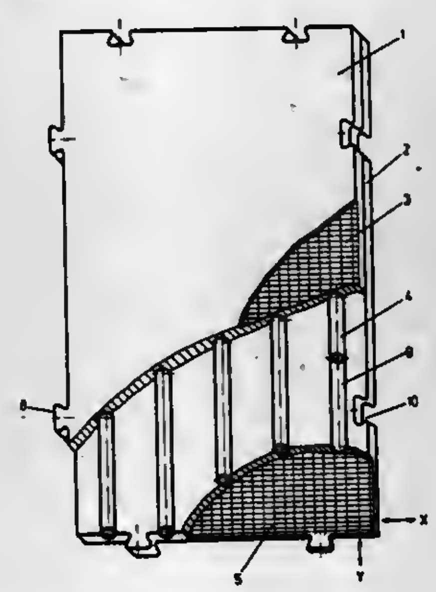

1. A hot water surface heating device, comprising:

a plurality of coupled, individually-prefabricated, plate-like assemblies, each of which includes a base plate, a cover plate and at least one plastic pipe disposed between said base plate and said cover plate, said plates each having a reinforcing layer and an inner surface opposing the inner surface of the other plate provided with at least one channel for the partial receipt therein of said at least one pipe and wherein said cover plates of said assemblies are offset with respect to their associated base plates so as to form circumferentially-disposed steps.

4,301,860

ROTARY DRUM HEAT EXCHANGER

Leopoldo Pozzi, Milan, Italy, assignor to Costruzioni Meccaniche Leopoldo Pozzi S.p.A., Italy

Filed Feb. 13, 1980, Ser. No. 121,056

Claims priority, application Italy, Oct. 15, 1979, 26508 A/79

Int. Cl.³ F28D *11/02;* **F28F** *5/00*

U.S. Cl. 165—90 **22 Claims**

1. A heat exchanger, comprising:

a shell;

a hollow rotor rotatably housed in said shell; said rotor having a longitudinal axis about which it is rotatable; said rotor being adapted to conduct heat between its interior and its exterior; said shell being adapted to have a first fluid flow therethrough in thermal contact with said rotor, and said rotor being adapted to have a second fluid flow longitudinally therethrough to effect heat exchange between the first and second fluids; the interior of said rotor being hydraulically sealed from the remainder of the interior of said shell; said rotor comprising a plurality of hollow bodies whose interiors communicate with each other; each said hollow body containing a diaphragm for regulating the flow of a fluid therethrough; each said hollow body cooperating with said diaphragm located

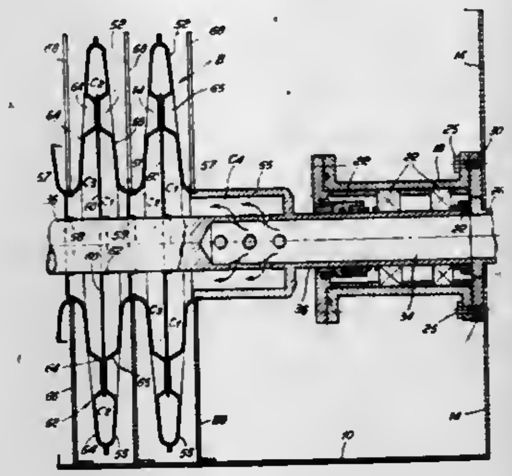

therein to define a constricted region to divide said hollow body into a plurality of communicating chambers for regulating the flow of a fluid through said hollow body;

mounting means for rotatably mounting said rotor in said shell; and

means for rotating said rotor, including said hollow bodies and said diaphragms.

4,301,861

STEAM CONDENSING APPARATUS

Michael W. Larinoff, Houston, Tex., assignor to Hudson Products Corporation, Houston, Tex.

Continuation-in-part of Ser. No. 585,952, Jun. 16, 1975, abandoned. This application Aug. 9, 1976, Ser. No. 712,590

Int. Cl.³ F28B *7/00*

U.S. Cl. 165—110 **9 Claims**

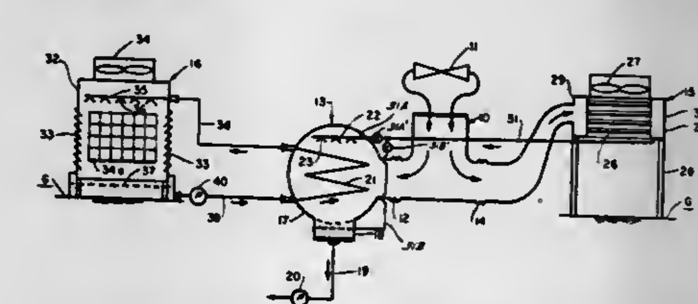

1. Apparatus for use in condensing steam from the turbine exhaust of a power plant or the like, comprising means for receiving steam from the turbine exhaust and dividing it into first and second branches, a steam condenser having an inlet for receiving steam from the first branch, a hot well to receive condensed steam, and an outlet from the hot well, means returning condensate from the outlet to the power cycle, cooling tower means having a wet section and a dry section, the wet section including fill over which ambient air is caused to pass, an inlet having means for distributing a cooling medium over the fill, and an outlet including a water basin to collect the medium beneath the fill, means connecting the inlet and outlet of the wet tower section with tubes within the steam condenser for circulating said medium through the tubes in heat exchange relation with the steam, the dry section including a tube bundle over which ambient air is caused to pass, an inlet to the bundle for receiving steam from the second branch, and an outlet from the bundle, and means for introducing condensate from the bundle into the condenser.

4,301,862

MULTIPLE FLUID MEDIUM SYSTEM AND IMPROVED HEAT EXCHANGER UTILIZED THEREIN

Roy E. McAlister, 5285 Red Rock North, Phoenix, Ariz. 85018

Continuation-in-part of Ser. No. 6,240, Jan. 24, 1979, which is a continuation of Ser. No. 774,501, Mar. 4, 1977, abandoned. This application Apr. 23, 1979, Ser. No. 32,639

Int. Cl.³ F28D *7/08, 9/04*

U.S. Cl. 165—165 **6 Claims**

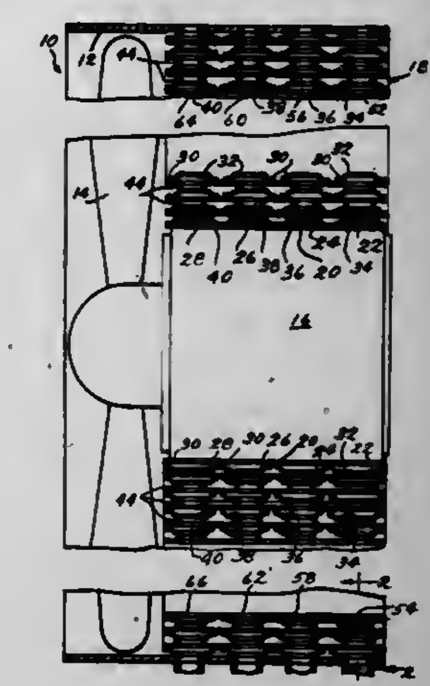

1. A heat exchanger comprising

a plurality of elongated strips of heat conducting material secured together to define a plurality of elongated passageways extending parallel to one another in the direction of elongation of said strips,

each of said passageways being of generally uniform cross-sectional configuration throughout the extent thereof,

said plurality of strips being wound spirally in a coil formation in a direction such that said passageways extend along side-by-side spiral paths,

sealing material spacer means between portions of the spirally wound strips defining adjacent volutes at two annularly spaced positions with respect to each spiral path,

the portions of said spirally wound strips at two annularly spaced positions and the sealing material spacer means secured thereto having first and second bores extending generally radially therein of a number equal to the number of spiral paths,

said plurality of first bores comprising a plurality of separate fluid medium inlet spaces communicating peripherally with an associated passageway at each volute for receiving therein a flow of fluid medium and directing the same into the associated passageway at each volute for flow therefrom in both annular directions,

said plurality of second bores comprising a plurality of separate fluid medium outlet spaces communicating peripherally with an associated passageway in each volute for receiving the flow of fluid medium in the associated passageway at each volute in both annular directions and directing the same outwardly therefrom, and

means for directing a flow of another fluid medium in an axial direction between adjacent volutes of the coil formation throughout the annular extent thereof between said annularly spaced positions where said sealing material spacer means prevents communication between said other fluid medium and the separate mediums flowing from the associate inlet space through the associated passageway at each volute in both annular directions into the associated outlet space.

4,301,863
HEAT EXCHANGER CLOSURE BAR CONSTRUCTION

Peter Bizzarro, Bloomfield, Conn., assignor to United Technologies Corporation, Hartford, Conn.

Filed Nov. 22, 1978, Ser. No. 963,073
Int. Cl.[3] F28F *3/02, 3/10*
U.S. Cl. 165—166 **10 Claims**

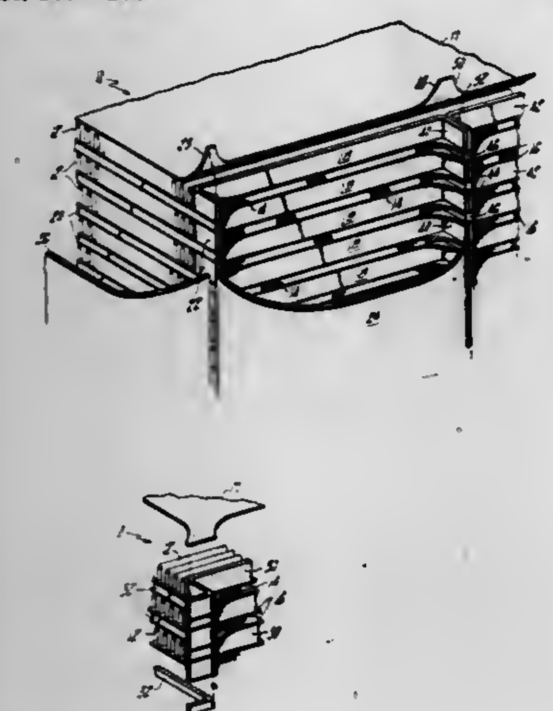

1. In a heat exchanger,
a core comprising a plurality of stacked layers, each layer including a continuous corrugated fin element forming a plurality of parallel open-ended channels adapted to pass a fluid therethrough, alternate layers of said core being stacked so that the fluid flow through channels in each layer is in a direction different from the channels in the adjacent layers,
flat parting sheets attached to and separating each of said layers,
cover members attached to the top and bottom layers to enclose said layers,
first closure bars extending the length of alternate finned layers at the outsides of said core, said first closure bars extending between adjacent parting sheets, each of said first closure bars including a first 90° bend at one end thereof, said 90° bend defining in said bar a first bent portion extending a short distance away from said core,
and second closure bars extending the length of the remaining alternate finned layers substantially perpendicular to said first closure bars, said second closure bars extending between adjacent parting sheets, each of said second closure bars including an unbent portion projecting beyond said core a distance equal to the length of the first bent portion of said first closure bars, the projecting portion of said second closure bars and the bent portion of said first closure bars being aligned in a plane and forming a flange extending away from said core.

4,301,864
PLATE HEAT EXCHANGER

Toivelemb Kivikas, Lund; Kaj Rissler, Helsingborg; Dag Rynell, Loddekopinge, and Malte Skoog, Lund, all of Sweden, assignors to Alfa-Laval AB, Tumba, Sweden

Filed Jul. 9, 1979, Ser. No. 55,699
Claims priority, application Sweden, Jul. 10, 1978, 7807676
Int. Cl.[3] F28F *3/08, 9/22, 13/06*
U.S. Cl. 165—167 **6 Claims**

1. A heat exchanger comprising a plurality of generally rectangular plates arranged adjacent to each other and defining intermediate passages connected in parallel for receiving heat exchanging fluids which are conveyed to and from the heat exchanger via inlets and outlets at one end thereof, the plates being provided at their corner portions with entrance ports and exit ports through which each said fluid is conducted from a said inlet to a said outlet by way of a plurality of said intermediate passages alternating with others of said intermediate passages, each said passage having means for regulating the resistance to flow therethrough from a said entrance port to a said exit port, said regulating means providing different said

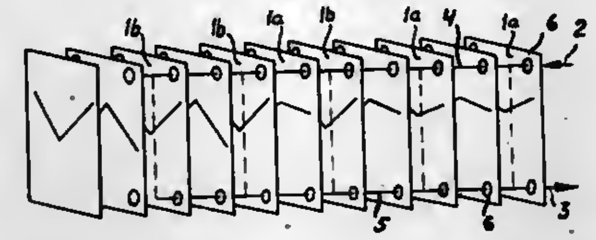

flow resistances through some of the intermediate passages for one of said fluids than through other said passages for said one fluid, said means being arranged to provide passages for said one fluid which are farther from said inlets and outlets with lower flow resistances than passages for said one fluid which are closer to said inlets and outlets.

4,301,865
IN SITU RADIO FREQUENCY SELECTIVE HEATING PROCESS AND SYSTEM

Raymond S. Kasevich, Weston; Myer Kolker, Bedford, and Arthur S. Dwyer, Braintree, all of Mass., assignors to Raytheon Company, Lexington, Mass.

Division of Ser. No. 756,165, Jan. 3, 1977, Pat. No. 4,140,179. This application Dec. 7, 1978, Ser. No. 967,446
Int. Cl.[3] E21B *43/24, 43/26*
U.S. Cl. 166—248 **12 Claims**

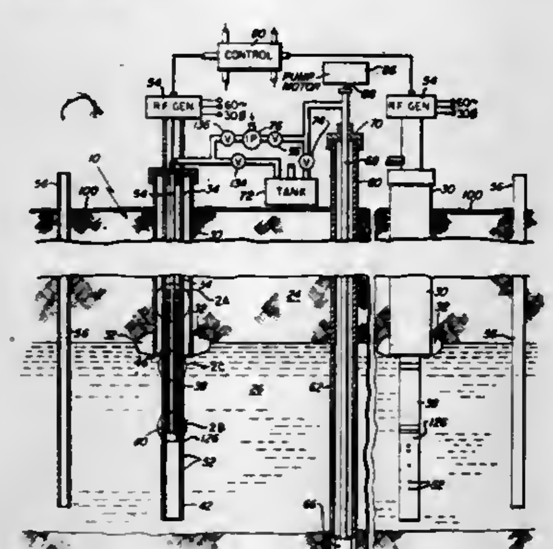

1. The method of producing organic liquids and gaseous products from organic compounds contained in a mineral formation comprising the steps of:
applying directional radiation patterns at a frequency between 100 kilohertz to 1000 megahertz to a region of said formation from a radiation system comprising a plurality of radiators spaced apart in said body by a distance greater than a tenth of a wavelength in said body at said frequency at an intensity which heats said organic compounds in said region to a temperature in the range between 200° C. and 500° C.; and
producing products derived from said organic compounds by the flow of said products through said formation to collecting regions.

4. A system for producing subsurface heating of a formation comprising:
a directional radiation system comprising a plurality of groups of radiators spaced apart in said formation by a distance greater than a tenth of a wavelength in said formation at a frequency fed to said radiator by means extending through a overburden into a region to be heated; and
means for supplying said systems with electrical energy at intensities and said frequency which produce electrical fields in said formation which heat selected organic portions of said formation to a temperature above 200° C.

4,301,866
METHOD AND APPARATUS FOR IGNITING AN IN SITU OIL SHALE RETORT

Robert S. Burton, Grand Junction; Sten I. Rundberg, Debeque; James V. Vaughn, Debeque; Thomas P. Williams, Debeque, and Gregory C. Benson, Grand Junction, all of Colo., assignors to Occidental Oil Shale, Inc., Grand Junction, Colo.

Filed Feb. 8, 1980, Ser. No. 119,857
Int. Cl.[3] E21B *43/243, 36/02*
U.S. Cl. 166—260 **14 Claims**

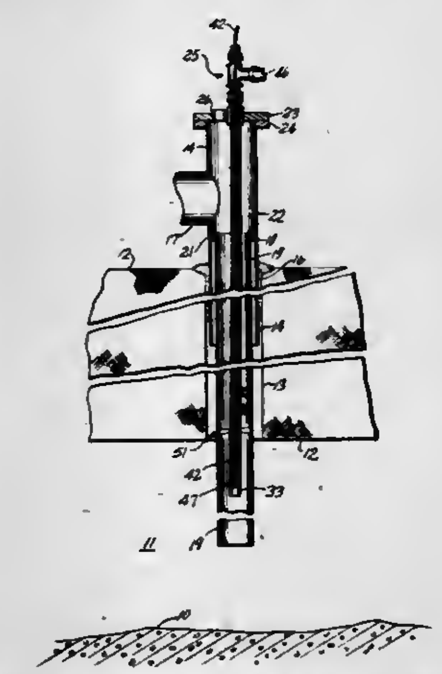

1. A method for igniting a fragmented permeable mass of formation particles in an in situ oil shale retort in a subterranean formation containing oil shale and having a void space between the top of the fragmented mass and overlying unfragmented formation, comprising the steps of:
forming a hole through unfragmented formation to the void space;
extending a conduit through the hole into the void space with an open end of the conduit adjacent the top surface of the fragmented mass;
centering in the conduit a burner assembly comprising a primary air pipe having an open end within the conduit and spaced apart from the open end of the conduit, and a fuel atomizing nozzle within the primary air pipe and spaced apart from the open end of the primary air pipe;
introducing liquid fuel through the fuel atomizing nozzle, primary air through the primary air pipe, and secondary air through the annulus between the primary air pipe and the conduit for vortical flow of the secondary air past the open end of the primary air pipe; and
igniting such fuel for producing a heated ignition gas from the open end of the conduit.

4,301,867
PROCESS FOR SELECTIVELY REDUCING THE PERMEABILITY OF A SUBTERRANEAN SANDSTONE FORMATION

Robert D. Sydansk, Littleton, Colo.; Paul R. Gucwa, Houston, Tex., and Sharon A. Stonecipher, Littleton, Colo., assignors to Marathon Oil Company, Findlay, Ohio

Filed Jun. 30, 1980, Ser. No. 164,617
Int. Cl.[3] E21B *33/138*
U.S. Cl. 166—292 **12 Claims**

1. A process for improving conformance and flow profiles of fluids injected into or produced from a subterranean sandstone formation having at least one zone of relatively high permeability and at least one zone of relatively low permeability, the formation being penetrated by a well bore in fluid communication therewith, the process comprising:
injecting into a portion of the sandstone formation via said well bore a caustic aqueous solution having an amphoteric metal dissolved therein and having an initial caustic concentration in excess of that stoichiometrically required to permit said amphoteric metal to be soluble in said caustic aqueous solution, said caustic interacting with said sandstone formation to form soluble silicate groups, said amphoteric metal reacting with at least a portion of said silicates to form an insoluble amphoteric metal silicate precipitate, the insoluble precipitate being preferentially and predominantly formed within said at least one zone of relatively high permeability, said precipitate predominantly and preferentially reducing the permeability of said at least one zone of relatively high permeability.

4,301,868
METHOD USING HYDROCARBON FOAMS AS WELL STIMULANTS

Gary A. Scherubel, University City, and Michael A. Thorne, Kirkwood, both of Mo., assignors to Petrolite Corporation, St. Louis, Mo.

Filed Oct. 15, 1979, Ser. No. 85,182
Int. Cl.[3] E21B *21/14, 43/25, 43/267*
U.S. Cl. 166—308 **5 Claims**

1. A process of well stimulation, comprising forcing an organo-polysiloxane-induced hydrocarbon foam mixture suitable for use in well stimulation into said well, said hydrocarbon being selected from the group consisting of kerosene, #2 diesel oil, well formation condensate and xylene, said siloxane having a molecular weight of from about 5,770 to about 20,000 and being of a concentration of from about 0.5 to about 2% by volume in said hydrocarbon and injecting nitrogen into said mixture.

4,301,869
STONE PICKING MACHINE

Gerald Dubois, 16 Ste-Marguerite, Sherrington, Co. Napierreville, Quebec, Canada

Filed Apr. 10, 1980, Ser. No. 140,101
Int. Cl.[3] A01B *43/00*
U.S. Cl. 171—63 **4 Claims**

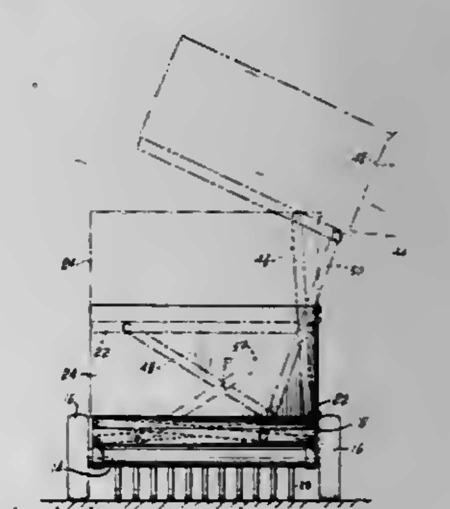

1. A stone picking machine adapted to be hauled by a tractor, comprising:
(a) a frame having a draft tongue adapted to be attached to the draw bar of the tractor;
(b) a cross axle with a pair of wheels supporting the frame;
(c) a box mounted on said frame;
(d) means for picking stones in the field while the machine is

being hauled by the tractor and for loading such stones in the box; and

(e) means for raising said box upwardly and for tilting it sidewise to dump the stones into a truck or onto a pile of stones;

said frame having a substantially rectangular fixed frame portion, a movable frame supporting said box and superposed on said fixed frame portion, the latter and said movable frame each having guide ways extending longitudinally thereof on each side of the box, and wherein said means for raising said box includes two pairs of scissors linkages located underneath each side of the box, both linkages in each pair being pivotally interconnected intermediate their ends, one of the linkages of each pair having one end pivoted on the fixed frame portion and the other linkage having one end pivoted on the movable frame on the ends of said frames where stone dumping takes place, and with the other end of the linkages of each pair carying rollers sliding in the guide ways of the fixed frame and in the guideways of the movable frame, the linkages which are slidably mounted in the movable frame being longer than the others so as to allow tilting of the box to dump sidewise, and power means for sliding said rollers in said guideways.

4,301,870
DEVICE FOR ELECTROHYDRAULICALLY LIFTING AGRICULTURAL IMPLEMENTS
Jean C. Carre, Asnieres, and Roger Maistrelli, Bougival, both of France, assignors to Regie Nationale des Usines Renault, Boulogne-Billancourt, France
Filed Sep. 10, 1979, Ser. No. 73,776
Claims priority, application France, Sep. 8, 1978, 78 25905
Int. Cl.[3] A01B *63/112*
U.S. Cl. 172—7 8 Claims

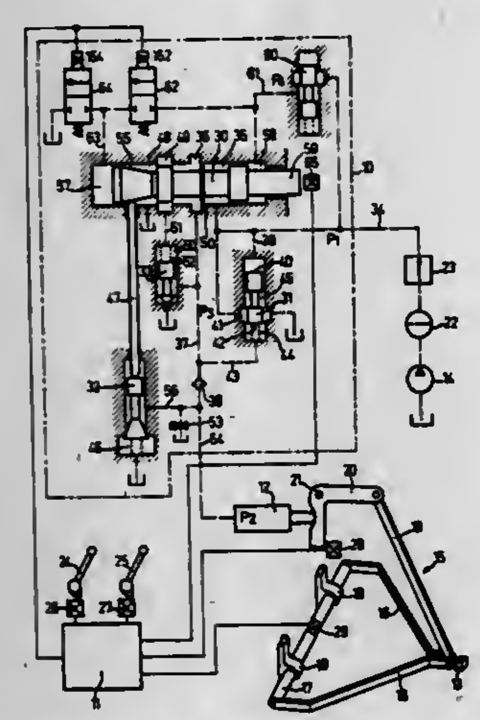

8. A device for hydraulically lifting agricultural implements, comprising:
a lifting jack,
a pump with constant stroke volume connected by a fluid passageway to a stepless distributor,
a flow pressure regulator of the pump piloted by the pressure of the lifting jack,
downstroke valve means adapted to connect the distributor to a reservoir for lowering the implements,
a relay valve means for connecting to the reservoir the piloting pressure of the regulator in the downward movement of the implements,
a reducing valve fed by the flow circuit of the pump, and
at least one pilot electrovalve of the stepless distributor fed by the reducing valve.

4,301,871
SOIL CULTIVATING MACHINES
Ary van der Lely, Maasland, and Cornelis J. G. Bom, Rozenburg, both of Netherlands, assignors to C. van der Lely N.V., Maasland, Netherlands
Continuation of Ser. No. 804,388, Jun. 7, 1977, abandoned. This application Apr. 5, 1979, Ser. No. 27,386
Claims priority, application Netherlands, Jun. 10, 1976, 7606256; Mar. 17, 1977, 7702876
Int. Cl.[3] A01B *33/06, 33/10*
U.S. Cl. 172—49.5 9 Claims

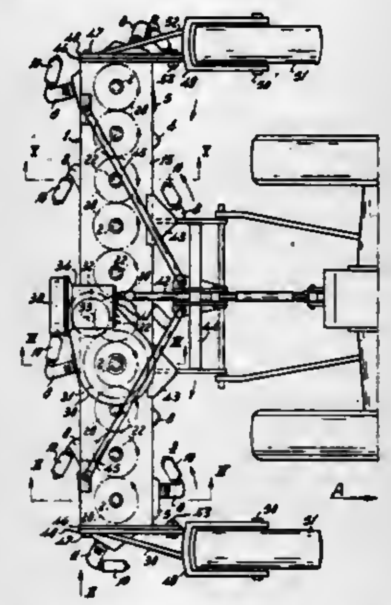

1. A soil cultivating machine comprising a frame and at least one soil working member mounted on said frame, said soil working member comprising tool carrier means on a substantially vertical shaft and said member being rotatable about an axis of rotation defined by said shaft, driving means connected to rotate said member about said axis, said carrier means mounting at least one tool and said tool including a portion that extends substantially straight and obliquely downwardly from the carrier means and outwardly with respect to said axis of rotation, a lower tool portion including a longitudinal blade having a forward leading surface and being pivotally joined to said straight portion, said lower portion being orientated forwardly with respect to the normal direction of rotation of said soil working member, the longitudinal center line of said blade being angularly adjustable relative to said lower portion and to the axis of rotation of said soil working member, whereby worked soil can be displaced inwardly and allowed to escape to the rear between the lower portion of the tool and said axis, during rotation of said member.

4,301,872
PLOW WITH CORRELATED PULL BAR ADJUSTMENT AND SUPPORT WHEEL STEERING
Dawson W. Hastings, La Porte, and Robert L. Wagner, Bloomington, both of Ind., assignors to Allis-Chalmers Corporation, Milwaukee, Wis.
Filed Aug. 29, 1980, Ser. No. 182,604
Int. Cl.[3] A01B *69/00, 63/22, 63/32*
U.S. Cl. 172—290 7 Claims

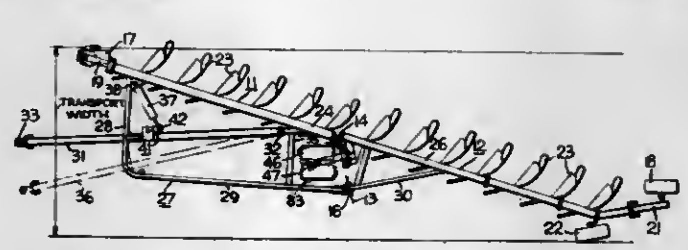

1. An articulated plow having front and rear sections whose adjacent ends are pivotally interconnected on a transverse horizontal axis and whose remote ends are supported by ground engaging wheels characterized by

a longitudinally extending pull bar having
a front end adapted for connection to a tractor and
a rear end pivotally connected to said front section for laterally swinging movement about an upright axis between plowing and transport positions,
a centrally located support wheel mounted on one of said sections for steering movement about a vertical axis between plowing and transport positions,
means operable to steer said centrally located support wheel including a first expansible and contractible hydraulic jack,
means operable to move said pull bar between its plowing and transport positions including a second expansible and contractible hydraulic jack connected in parallel to said first hydraulic jack, and
a hydraulic control system for said jacks including a source of pressure fluid, a control valve connected in controlling relation to said jacks and shiftable between plowing and transport positions, said pull bar and centrally located support wheel being simultaneously moved to their plowing and transport positions when said control valve is placed in its plowing and transport positions, respectively.

4,301,873
AGRICULTURAL IMPLEMENT HAVING FIELD AND TRANSPORT MODES
Bobby G. Baxter, Warrenton, Mo., assignor to The Binkley Company, Warrenton, Mo.
Filed Jul. 20, 1979, Ser. No. 59,313
Int. Cl.[3] A01B *73/00*
U.S. Cl. 172—311 48 Claims

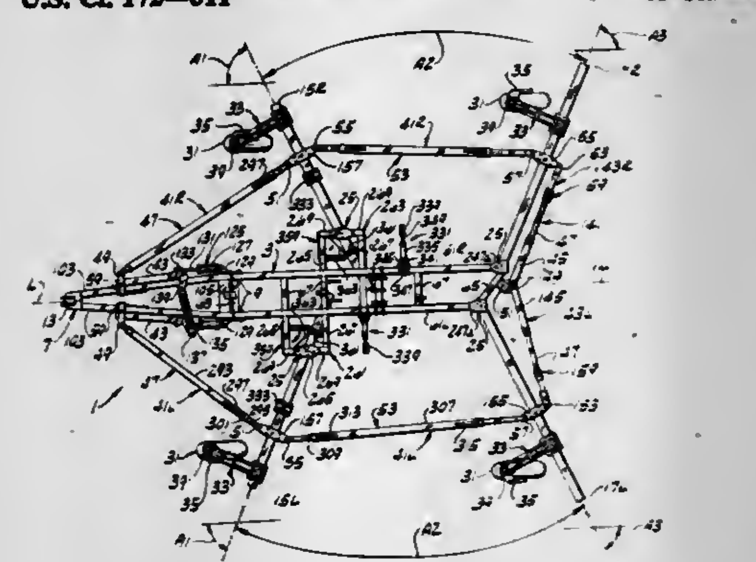

1. An agricultural implement comprising:
a frame on wheels, said frame having a longitudinal axis and left and right sides as viewed in a forward direction;
a tongue for hitching the frame to a towing vehicle, said tongue extending forward from the frame and being pivotally connected adjacent its rearward end to the frame for up and down swinging movement relative to the frame on an axis transverse to the frame
means for raising and lowering the frame relative to its wheels;
a forward and a rearward tool-carrying beam on the left side of the frame;
a forward and a rearward tool-carrying beam on the right side of the frame;
each beam carring a gang of tools;
each beam being pivoted on the frame on a first axis for swinging movement relative to the frame between a field position extending out from the respective side of the frame at an angle to the longitudinal axis of the frame and a transport position extending rearward from its pivot and generally parallel to the longitudinal axis of the frame;
each beam also being pivoted on the frame for up and down swinging movement relative to the frame on a second axis;
a swivel wheel for each beam;
means for raising and lowering each beam relative to its swivel wheel whereby the beam may be maintained in a generally horizontal position as the frame is raised or lowered relative to its wheels;
a pair of arms at opposite sides of the tongue each pivoted on the tongue for swinging movement between a field position extending forward from the pivot to the arm and a transport position extending out from the respective side of the tongue;
a pair of first links, one at each side of the implement, each having a connection at one end constituting its forward end to a respective arm and a connection at its other end constituting its rearward end to a respective forward beam, said connections being such as to allow up and down swinging of the tongue relative to the frame and the forward beam and to allow swinging movement of the forward beam between its field and transport positions and up and down swinging of the forward beam relative to the frame;
a pair of second links, one at each side of the implement, each having a connection at one end constituting its forward end to a respective forward beam and a connection at its other end constituting its rearward end to a respective rearward beam, said connections being such as to allow swinging movement of the beams between their field and transport positions and relative up and down swinging of each beam and the respective second link;
each arm and the first and second links at the respective side of the implement constituting a linkage between the tongue and the forward and rearward beams at that side;
each link of one of said pairs of links comprising members which are extensible and contractile in the lengthwise direction of the link and which are free to extend or contract within limits as the beams swing between their field and transport position a distance sufficient to permit the beams to swing between their field and transport positions;
each linkage allowing the swinging of the tongue relative to the frame and the up and down swinging of the beams; and
means for latching each of said arms in field position, said links thereupon holding said beams in field position as the implement is towed forward.

4,301,874
PILE OR SHEET-PILE DRIVER
Keichiro Majima, 1380-2, Oaza Nishi Toyoi, Kudamatsu-shi, Yamaguchi-ken, Japan
Filed Nov. 8, 1979, Ser. No. 92,371
Int. Cl.[3] E02D *7/10*
U.S. Cl. 173—152 13 Claims

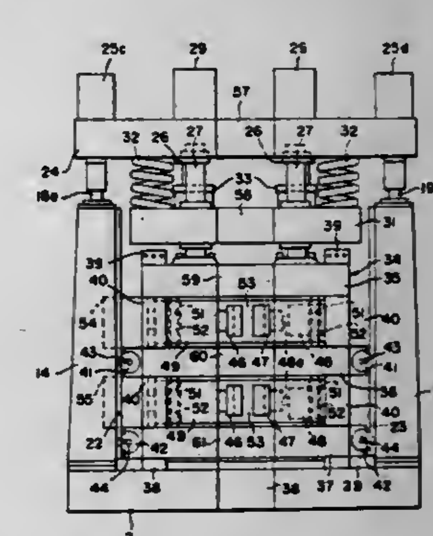

1. Pile or sheet-pile driver comprising:
a mount;

a plurality of hydraulic cylinders fitted upright to said mount;
a vertically movable member, fitted to piston rods jutting upwardly from the top of said hydraulic cylinders, which extends in the horizontal direction;
a chucking device with a pair of chucking fingers movable toward or away from each other in the lateral direction, said chucking device being attached to said vertically movable member via a guide rod and free to move vertically;
an elastic member installed between said vertically movable member and said chucking device such that said chucking device can be urged downwardly;
a hydraulic cylinder mounted on said device to move said chucking fingers towards or away from each other;
and at least one longitudinal vibrator attached to said vertically movable member at a position between said vertically movable member and said chucking device; said chucking device being located so that a pile held upright can be inserted sidewise into position between said two chucking fingers.

4,301,875
METHOD FOR MAKING HOLES AND PRODUCING GAS IN COAL SEAMS
German Munding, Bad Friedrichshall; Helmut Hopmann, Ottobrunn; Armin Sowa, Ottobrunn; Christian Beckervordersandforth, Aachen-Verlautenheide, and Walter Teruchs en, Aachen, all of, Fed. Rep. of Germany, assignors to Messerschmitt-Bölkow-Blohm GmbH, Fed. Rep. of Germany
Continuation-in-part of Ser. No. 883,593, Mar. 6, 1978, abandoned. This application Nov. 27, 1979, Ser. No. 97,800
Claims priority, application Fed. Rep. of Germany, Mar. 4, 1977, 2709437
Int. Cl.³ E21C *43/00, 43/243*
U.S. Cl. 175—12 8 Claims

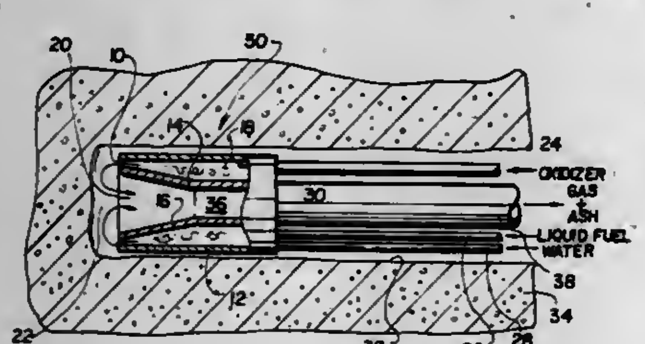

1. A method of making holes in coal seams particularly inclined and horizontal holes which connect vertical drill holes leading from the surface to the coal seam and through which a medium for gasifying the coal which is produced on the ground is blown into vertical drill holes leading from the coal seam to the surface and through which a produced gas results from the coal degasification is blown out, which comprises: directing a hot working gas toward the coal in a seam at high pressure and speed to disintegrate the coal; directing a gasification medium of high temperature and pressure into contact with the disintegrated coal to gasify the coal and form the produced gases on the spot where the disintegrated coal is disintegrated by the working gas to thereby make the holes; and directing the produced gases out of the holes.

4,301,876
NON-ROTATING STABILIZER FOR RAISE BORING
Simon J. Harrison, Azilda, and Enea R. Pividor, Sudbury, both of Canada, assignors to Smith International, Inc., Newport Beach, Calif.
Filed Aug. 24, 1979, Ser. No. 69,352
Int. Cl.³ E21D *3/00*
U.S. Cl. 175—53 6 Claims

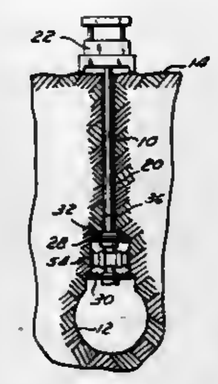

1. An earth boring drilling assembly for drilling large diameter holes having a rotatable drill string comprising:
(a) a first drill bit body which is connected to rotate with said drill string;
(b) a stabilizer having a radially inner portion connected to rotate with said first drill bit body and an outer portion rotatably mounted on said inner portion, said outer portion comprising a plurality of radially extending pads circumferentially spaced around said inner portion each pad forming a box-like structure comprising:
(i) an inner vertically oriented wall;
(ii) a pair of spaced vertically oriented side walls extending radially outward from said inner wall;
(iii) an outer wall connected to said side walls forming a vertically extending shoe which engages the wall of the hole being drilled; and
(iiii) an upper wall which connects the upper ends of said inner wall, said side walls and said shoe to form said box-like structure.

4,301,877
CLAD MUD NOZZLE
John D. Cloud, Houston, Tex., assignor to Hughes Tool Company, Houston, Tex.
Filed Mar. 10, 1980, Ser. No. 128,695
Int. Cl.³ E21C *13/01*
U.S. Cl. 175—340 3 Claims

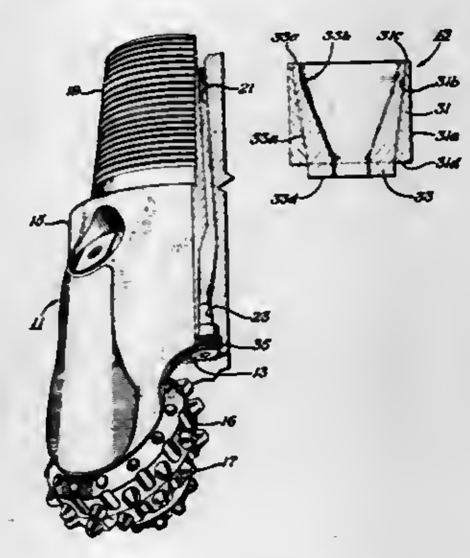

1. In an earth boring drill bit of the type having a plurality of rotatable cutters mounted on a body, the body having an integral passage with at least one oulet for the passage of drilling fluid, the passage having an enlarged diameter portion at its outlet that is separated from the passage immediately upstream by a downwardly facing shoulder, an improved nozzle comprising in combination;
a nozzle shell positioned in the enlarged portion, the shell having a circular upper rim in contact with the shoulder, a bore and a circular lower rim;
a nozzle insert bonded to the bore of the shell, the insert having a bore for receiving and discharging drilling fluid from the passage, the insert having a circular upper rim flush with the upper rim of the shell and an extended portion extending past the lower rim of the shell; the insert being formed of a material selected from the group consisting of tungsten carbide and ceramic; and
retaining means in contact with the lower rim of the shell and the passage for releasably securing the nozzle in the passage.

4,301,878
COMPUTING SCALE WITH LABEL ISSUING SCHEME
Masao Soe, Osaka, Japan, assignor to Kubota, Ltd., Osaka, Japan
Filed Jan. 11, 1980, Ser. No. 111,406
Claims priority, application Japan, Mar. 27, 1979, 54-40481[U]; Mar. 27, 1979, 54-40482[U]; May 14, 1979, 54-64352[U]
Int. Cl.³ G01G *23/38;* B65H *23/04, 17/02*
U.S. Cl. 177—5 39 Claims

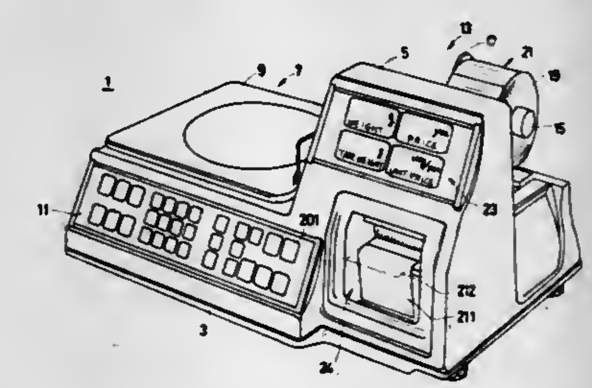

1. A computing scale with a label issuing system including a weighing portion for weighing the weight of a commodity and a label issuing portion for issuing a label to be stuck to said commodity based on weighed data obtained from said weighing portion; said label issuing portion comprising a base portion, printer means provided above said base portion and spaced apart from said base portion by a small gap, rolled-up sheet supporting means disposed above and in the rear of said printer means for supporting a coil of a label retaining backing sheet and so as to be capable of yielding said backing sheet, first guide means for guiding said backing sheet from said rolled-up sheet supporting means to a print position of said printer means for printing predetermined information on said label based on the weighed data obtained from said weighing portion, said computing scale further comprising: stripping means located forward of said printer means for substantially stripping a label from said backing sheet on which said predetermined information has been printed, strip operation enabling means associated with said stripping means for manually completely stripping said substantially stripped label, backing sheet winding means comprising rotation driving means, and a winding drum driven by said rotation driving means located below and in the rear of said printer means for winding said backing sheet from which labels have been stripped through said strip operation enabling means, second guiding means for guiding said backing sheet through said strip operation enabling means into said backing sheet winding means said rotation driving means further comprising power supply means, motor means connected to be energized by said power supply means, first switch means interposed between said power supply means and said motor means, and second switch means for starting a feeding operation of said backing sheet, whereby said first switch means serves to initiate a supply of power from said power supply means to said motor means in response to an operation of said second switch means.

4,301,879
BODY WEIGHT SCALE WITH HISTORICAL RECORD DISPLAY
Arnold A. Dubow, 6104 Stearns Hill Rd., Waltham, Mass. 02154
Filed Feb. 27, 1980, Ser. No. 125,131
Int. Cl.³ G01G *23/38, 23/32*
U.S. Cl. 177—5 10 Claims

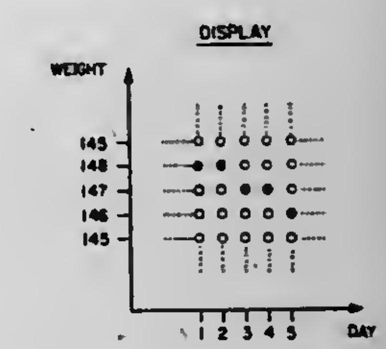

1. A digital body weight scale system with historical display, comprising:
A. transducer including a force sensor and associated means for generating digital weight signals representative of the body weight of a person in sensed relation with said sensor,
B. data entry means for generating a digital time signal representative of a point in time associated with the generation of one of said weight signals,
C. storage means for storing said time signals and said weight signals,
D. control means including addressing means for controlling the storage of said time signals and said weight signals in said storage means, and further including signal processing means for selectively extracting said stored time and weight signals and generating display signals therefrom, said display signals being representative of the body weight of said person as a function of time, and
E. display means responsive to said display signals for displaying information representative of said body weight as a function of time,
wherein said display includes:
a rectangular array of selectively operative light generating cells including a succession of m columns of cells, each column having n cells therein where m and n are integers, wherein the cells of each column in said succession are associated with a corresponding point of a succession of points in time, and each cell of a column is representative of a predetermined weight associated with the point in time for that column, and
means responsive to said display signals to selectively illuminate at least one cell in each column having an associated point in time corresponding to the point in time associated with said generation of one of said weight signals, said one illuminated cell being representative of the body weight represented by that weight signal.

4,301,880
DEVICE FOR PNEUMATIC CHARGING CONTAINER-TYPE BALANCE
Wolfgang Krambrock, Vogt, and Nobert Eberhard, Ertingen, both of Fed. Rep. of Germany, assignors to Waeschle Maschinenfabrik GmbH, Ravensburg, Fed. Rep. of Germany
Filed Dec. 18, 1979, Ser. No. 104,903
Claims priority, application Fed. Rep. of Germany, Dec. 22, 1978, 2855751
Int. Cl.³ G01G *21/10;* B65B *1/16, 1/30*
U.S. Cl. 177—189 12 Claims

1. A pneumatic device for feeding loose material into a

container-type balance, comprising: pneumatic feeding means including a pneumatic circuit in which the container of the balance is connected so as to be subjected to the pneumatic

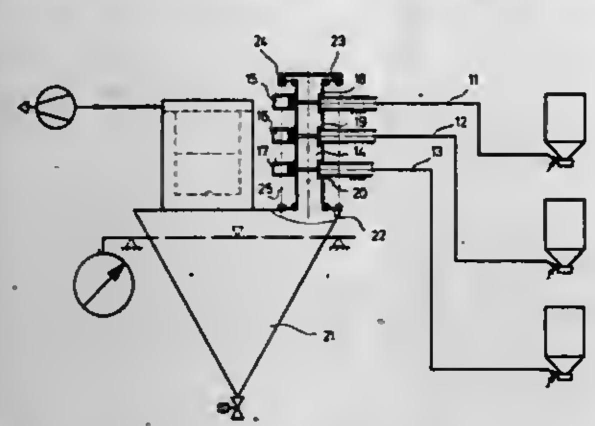

action in the circuit, a rigid feeding conduit arranged in said circuit for discharging the loose material from above into said container; and means for compensating reaction forces acting on said container due to the pneumatic feeding process.

4,301,881
VEHICLE DRIVE SYSTEM
Hugh A. Griffin, R.R. 5, Box 410, Greenfield, Ind. 46140
Filed May 8, 1979, Ser. No. 37,092
Int. Cl.³ B62D *11/04*
U.S. Cl. 180—6.48 **12 Claims**

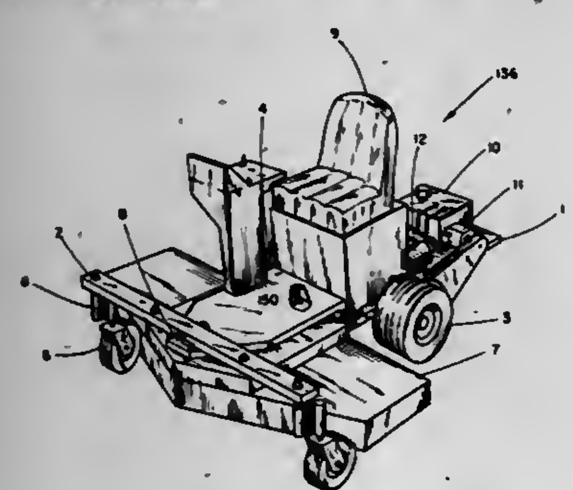

5. A mobile vehicle apparatus comprising:
mobile platform means, including a first drive wheel and a second drive wheel for propelling the platform and including at least one caster wheel, the platform being supported by the first and second drive wheels and the caster wheel;
power means, including an engine to supply rotational power;
power conversion means, including a pressure regulated hydraulic pump for accepting said rotational power from said power means and developing fluid flow to derive a power limited source of drive power, the pressure regulation of the pump provides torque limiting regulation to said first drive wheel and said second drive wheel to prevent drive wheel slippage with the contacting travel bed surface;
first drive control means, including a first hydraulic motor for accepting said source of drive power and for transmitting and regulating the amount of drive power supplied to said first drive wheel, including a first bypass valve across the first hydraulic motor which permits the first drive wheel to be disconnected from the drive power when the first bypass valve is opened to permit free wheeling;
second drive control means, including a second hydraulic motor for accepting said source of drive power and for transmitting and regulating the amount of drive power supplied to said second drive wheel, including a second bypass valve across the second hydraulic motor which permits the second drive wheel to be disconnected from the drive power when the second bypass valve is opened to permit free wheeling;
steering control means, including at least one directional control valve for directing said fluid flow to said first drive control means and said second drive control means whereby the direction of travel of said mobile vehicle is determined, including a bypass valve controller to selectively open no more than one of either the first bypass valve or the second bypass valve.

4,301,882
POWER-ASSISTED STEERING SYSTEM
Alain Dera, Rueil-Malmaison, and Georges Itey-Bernard, Juan-les-Pins, both of France, assignors to Regie Nationale des Usines Renault, France
Filed Oct. 15, 1979, Ser. No. 85,139
Claims priority, application France, Nov. 9, 1978, 78 31750
Int. Cl.³ B62D *5/06*
U.S. Cl. 180—153 **6 Claims**

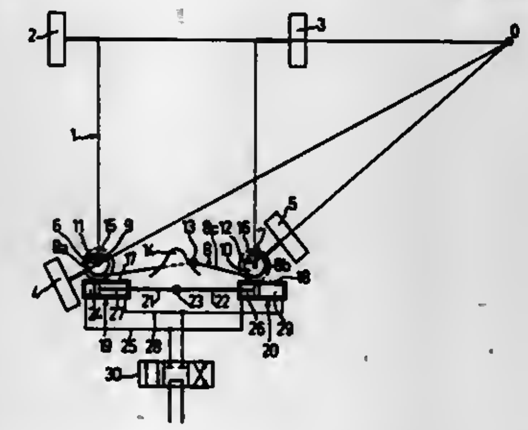

1. A power-assisted steering system for a motor vehicle comprising a pair of guiding wheels; substantially vertical pivot means mounting said guiding wheels for steering turning movement; a manually operable steering device; a pair of drums; means rotatably mounting said drums for turning movement, one with each of said guiding wheels; a non-elastic flexible tie, said tie having two end portions and an intermediate portion; means anchoring one said end portions to each of said drums with said end portions being wrapped in opposite senses one around each of said drums; a pair of double-acting rams each having a first portion connected to the chassis of the vehicle and a second portion movable with respect to the chassis of the vehicle, each of said second portions cooperating with said pivot means to turn one of said guiding wheels as said second portions move with respect to the chassis of the vehicle; a distributor valve capable of assuming any one of three valve positions, said distributor valve in the first valve position adapted to couple a hydraulic source to said rams to move said second portions in a first direction relative to the chassis of the vehicle to turn the guiding wheels in a first direction, said distributor valve in the second valve position adapted to couple the hydraulic source to said rams to move said second portions in a second direction relative to the chassis of the vehicle to turn the guiding wheels in the opposite direction, said distributor valve in the third valve position adapted to isolate the hydraulic source from said rams; control means responsive to operation of said steering device for causing said distributor valve to assume one of the three valve positions; at least one roller mounted on said intermediate portion of said tie; and at least one cam secured to the chassis of the vehicle and cooperating with said roller to deform said intermediate portion of said tie as said guiding wheels turn, whereby said steering system provides differential turning of said pair of guiding wheels to cause said pair of guiding wheels to have the same center of turning.

4,301,883
DEVICE FOR THE CONTROL OF THE TRAVELING SPEED OF A MOTOR VEHICLE
Harald Collonia, Glashütten, Fed. Rep. of Germany, assignor to VDO Adolf Schindling AG, Frankfurt am Main, Fed. Rep. of Germany
Filed Jul. 17, 1978, Ser. No. 924,952
Claims priority, application Fed. Rep. of Germany, Jul. 21, 1977, 2732905
Int. Cl.³ B60K *31/00*
U.S. Cl. 180—179 **16 Claims**

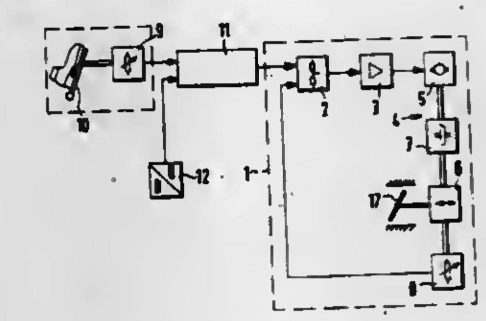

1. A device for the control of the speed of travel of a motor vehicle by controlling the element which controls the fuel-air mixture, particularly the throttle valve and having a gas pedal which is actuatable by the driver, comprising
transmitter means coupled with the gas pedal and transmitting an electric signal dependent on the position of the gas pedal,
means for effecting a gas pedal dependent adjustment of said throttle valve in dependency on the position of the gas pedal corresponding to from zero vehicle speed to a maximum vehicle speed, said means comprising an electrical controller having an electrical desired-value input operatively connected with said transmitter means and an electrical actual-value input, said electrical controller including an adjustment actuator coupled with the throttle valve, and means for transmitting the instantaneous position of the adjustment actuator as an electrical signal to said actual-value input,
circuit means operatively connected with one of said inputs of said electrical controller for producing a correction signal for superimposing correction of a continuing operative said gas pedal dependent adjustment of the throttle valve so as to decrease fuel consumption substantially independently of the extent of stepping-down on the gas pedal by the driver, said correction signal being dependent on at least one instantaneous operating parameter of the vehicle which is dependent on consumption of fuel.

4,301,884
TRACK SUSPENSION AND DRIVE FOR SNOWMOBILE
Jerry L. Taylor, 148 Juniper St., Madras, Oreg. 97741
Filed Nov. 13, 1979, Ser. No. 93,066
Int. Cl.³ B62M *27/02*
U.S. Cl. 180—190 **12 Claims**

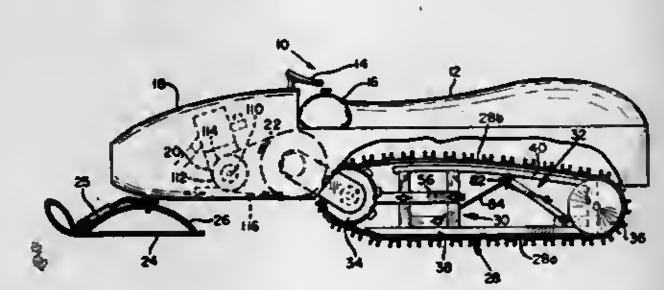

12. An endless track vehicle comprising:
a main frame,
a subframe mounting an endless track,
resilient suspension means interconnecting said main frame and said subframe,
a track drive sprocket means drivingly engaging said endless track,
a drive axle mounting said track drive sprocket means, said drive axle being mounted on said subframe,
said drive sprocket means engaging said endless track at one end portion of said track and an idler wheel means engaging said track at an opposite end portion thereof,
an idler axle mounting said idler wheel means, said idler axle being mounted on said subframe, and
a transverse suspension shaft on said main frame extending adjacent to said subframe and longitudinally between said driven axle and said idler axle, said resilient suspension means including torsion spring means connected to one end portion to said suspension shaft and at an opposite end portion to a lower forward portion of said subframe to interconnect said main frame and said subframe, said resilient suspension means also including swing arm means connected at one end to said suspension shaft and at an opposite end to a lower portion of said subframe, said torsion spring means and said swing arm means extending diagonally in opposite directions from said suspension shaft, the connections of said torsion spring means and said swing arm means to said subframe including lost motion connection means enabling upward movement of forward and rear portions of said subframe relative to said suspension shaft, said torison spring means acting in conjunction with said suspension shaft means to urge the spring-connected portion of said subframe downwardly, said swing arm means acting in conjunction with said suspension shaft means and said torsion spring means to urge the swing arm-connected portion of said subframe downwardly relative to said main frame.

4,301,885
MOTOR-ASSISTED BICYCLE
Gerhard Kostron, Wels, Austria, assignor to Bombardier-Rotex Gesellschaft m.b.H., Gunskirchen, Austria
Filed Dec. 26, 1979, Ser. No. 106,864
Claims priority, application Austria, Jan. 5, 1979, 78/79
Int. Cl.³ B62K *11/00*
U.S. Cl. 180—205 **6 Claims**

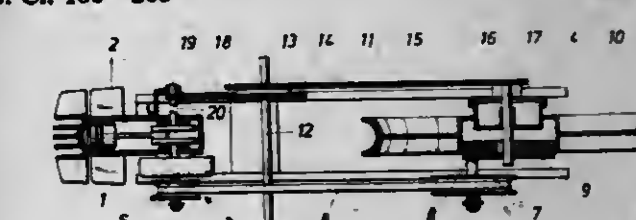

1. A motor-assisted bicycle, comprising
a supporting structure,
a pedal shaft rotatably mounted in said supporting structure,
a rear wheel shaft spaced apart from said pedal shaft and rotatably mounted in said supporting structure,
a chain drive operatively connected to said pedal shaft,
an overrunning clutch which is engageable to transmit torque from said chain drive to said rear wheel shaft,
a motor carried by said supporting structure and having a motor shaft,
a self-adjusting cone drive operatively connected to said motor shaft and to said rear wheel shaft,
an arbitrarily engageable one-way starting clutch which on one side is operatively connected to said pedal shaft independently of said rear wheel shaft and on the other side is operatively connected to said motor shaft, and
engagement-preventing means which are associated with said overrunning clutch and arbitrarily controllable to selectively permit and prevent its engagement.

4,301,886
FRONT WHEEL DRIVE
Mikio Kinoshita, Izumisano, and Mitsuhiro Kutomi, Izumiotsu, both of Japan, assignors to Kubota, Ltd., Osaka, Japan
Filed Sep. 12, 1979, Ser. No. 75,164
Claims priority, application Japan, Mar. 23, 1979, 54-38581[U]
Int. Cl.³ B60K *17/30*
U.S. Cl. 180—261 **3 Claims**

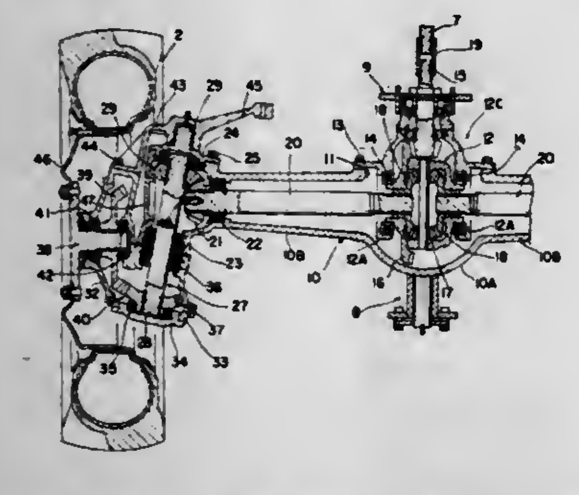

1. A front wheel drive comprising: a cylindrical front axle case (10) housing front axles (20) and having transmission cases (23) integral therewith, a transmisson (27) rotatably journaled in each of said transmission cases (23) and driven by one of said front axles for driving a front wheel (2), and a transmission case cover (24) removably attached to each of integrally formed said front axle case (10) and said transmission cases (23), said transmission case cover (24) supporting one of said front axles (20) and said transmission (27) at positions adjacent one end thereof respectively.

4,301,887
ACCELERATION-RESPONSIVE APPARATUS FOR SENSING FIRING INSTANT OF AN AIR GUN
Augustus H. Fiske, Jr., 66 Hill Rd., Redding, Conn. 06896, assignor to Bolt Associates, Inc., Norwalk, Conn.
Filed Nov. 2, 1979, Ser. No. 90,608
Int. Cl.³ G01V *1/26*
U.S. Cl. 181—107 **14 Claims**

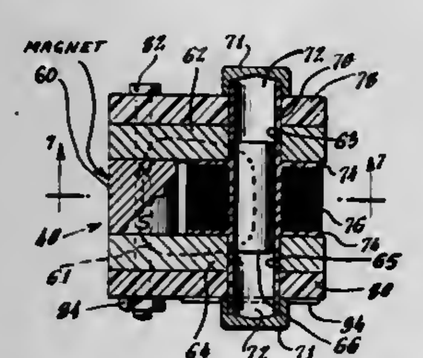

1. A variable reluctance-type sensor adapted to indicate a sudden acceleration in a predetermined direction comprising:
a magnetic circuit,
said magnetic circuit including two spaced pole pieces of magnetically permeable material,
said pole pieces having aligned holes therein,
an elongated thin-walled cylindrical capsule of non-magnetic material extending between said pole pieces,
the ends of said capsule extending into said holes in said pole pieces,
said sensor being adapted to be mounted with said elongated thin-walled cylindrical capsule extending in said predetermined direction in which said acceleration occurs,
an elongated armature containing magnetically permeable material and being freely movable in the longitudinal direction within said cylindrical capsule,
said elongated armature being in said magnetic circuit,
a permanent magnet in said magnetic circuit,
said elongated armature in its normal rest position having each end inserted at least partially into a respective one of said holes and being held in said rest position solely by magnetic action, and
a coil coupled to said magnetic circuit for providing an electrical signal when said armature is suddenly displaced from said normal rest position.

4,301,888
BI-DIRECTIONAL IMPULSE SHEAR WAVE GENERATOR AND METHOD OF USE
James B. Gibson, Placentia; Daryl R. Boomer, Yorba Linda, both of Calif., and Henry Schoellhorn, III, Rumbai, Indonesia, assignors to Chevron Research Company, San Francisco, Calif.
Filed Oct. 17, 1979, Ser. No. 85,566
Int. Cl.³ G01V *1/053, 1/155*
U.S. Cl. 181—114 **11 Claims**

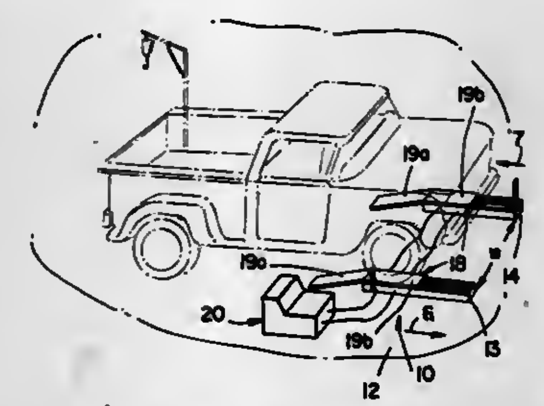

1. Method of positioning and generating shear wave energy for use in connection with a seismic exploration system, comprising:
(a) positioning wheels of a vehicle atop first and second guillotinized sub-assemblies of a shear wave generator, to couple the generator to the earth's surface;
(b) hydraulically causing travel of spring-biasable hammer elements of said sub-assemblies in first and second monitorable directions, said directions being opposite to each other;
(c) after monitoring the releasably securing of said spring-biased hammer elements relative to said frame by common controller means, sequentially releasing said hammer elements relative to said frame so that said hammer elements are sequentially carried in directions opposite to said spring-biasing directions and to each other, until impinging contact with anvil elements carried on said main frame occurs, whereby bi-directional shear wave energy is sequentially caused to propagate into said earth.

4,301,889
SPEAKER ENCLOSURE
David V. Tralonga, 1224 N. Prospect Ave., Milwaukee, Wis. 53202
Filed Jul. 27, 1979, Ser. No. 61,249
Int. Cl.³ H05K *5/00*
U.S. Cl. 181—145 **3 Claims**

1. A speaker enclosure, comprising a cabinet having a pair of side walls, a top wall, a rear wall, and an internal generally horizontal wall, said horizontal wall dividing the cabinet into an upper compartment and a lower compartment; a first sound emitting member mounted in the upper compartment with the outlet of said member facing forwardly, a first baffle disposed horizontally across the outlet of said first member and having a pair of forwardly diverging surfaces to deflect the sound

energy emanating from said first member upwardly and downwardly, a second sound emitting member mounted in the lower compartment and spaced from the side walls of the cabinet to provide a pair of side openings on either side of said second member, said openings being unobstructed and extending the full height of the lower compartment, and a second baffle disposed in the lower compartment and located to the rear of said second member and having a W-shaped configuration in horizontal cross section and extending the full height of said lower compartment, said second baffle having a central vertically extending apex disposed in proximate relation to the rear end of said second member, the sound energy emanating from the rear portion of said second member being deflected forwardly by said second baffle and delivered through said side openings.

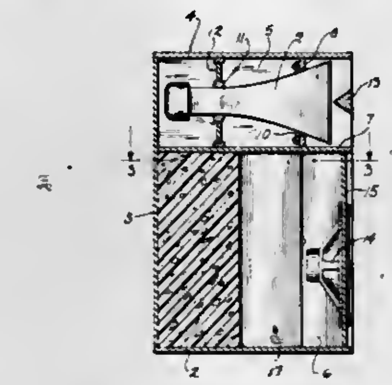

4,301,890
SOUND-ABSORBING PANEL
John M. Zalas, Erie, Pa., assignor to Lord Corporation, Erie, Pa.
Filed Dec. 6, 1979, Ser. No. 100,809
Int. Cl.³ E04B *1/82*
U.S. Cl. 181—286 **7 Claims**

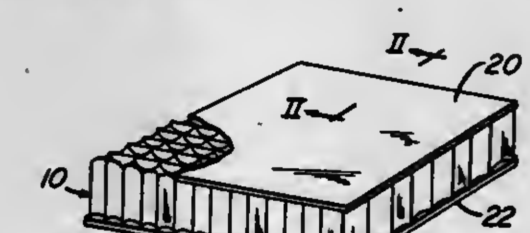

1. A sound-absorbing panel comprising a honeycomb core having cavities formed therein and having bonded to its opposite sides non-porous panels, at least one of said panels which is subjected to acoustic vibrations being formed from a flexible membrane whose natural frequency of vibration is substantially the same as both the natural frequency of vibration of the membrane in combination with a cavity in the honeycomb core and the standing wave natural frequency of the cavity itself.

4,301,891
CLIMBING APPARATUS
Jivan Harbian, 400 Kent Dr., Wentzville, Mo. 63385
Continuation-in-part of Ser. No. 66,517, Aug. 15, 1979, abandoned. This application May 27, 1980, Ser. No. 153,024
Int. Cl.³ E06C *1/00;* **A63B** *27/02*
U.S. Cl. 182—135 **6 Claims**

1. Climbing apparatus comprising a pole having means for maintaining it against rotation about its axis, a foot supporting element and another element for supporting another part of a climber's body, each of said supporting elements comprising a collar axially-slidably mounted on said pole, said pole and said collar having cooperating means preventing rotation of said collar about said pole, and a transverse arm pivoted to said collar for movement in an axial plane of said pole between positions substantially normal to the axis of said pole and upwardly inclined positions, each of said arms mounting an element frictionally engageable with said pole when said arms are in their lowermost positions for locking the respective element against undesired axial movement downwardly of said pole, said other element arm mounting a seat, said seat-mounting arm extending forwardly from said collar and being the first arm of a bellcrank having a second arm extending generally

parallel to the axis of said pole, said frictionally engageable means being mounted on said second arm, means resiliently biasing said first arm and seat upwardly and said second arm outwardly from said pole, whereby when said seat is occupied by a climber said bellcrank pivots to move said frictionally engageable element into engagement with said pole to lock said element against downward movement.

4,301,892
DEVICE FOR THE ASCENSION AND DESCENSION OF HIGH ALTITUDES
Carlos L. Arce, 20-25 W. Mosholu Pkwy. South, Bronx, N.Y. 10468
Filed Aug. 11, 1975, Ser. No. 603,730
Int. Cl.³ A62B *1/12*
U.S. Cl. 182—233 **3 Claims**

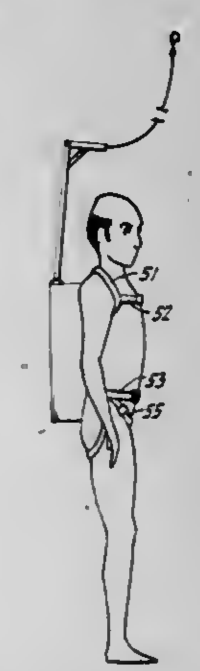

1. A portable fire escape device comprising in combination: a spool support means for mounting a spool and a piston means and a harness means thereon; a spool having elongated wire wound thereon, mounted revolvably on the spool support means; a piston means having a piston, a piston rod and a piston housing, the piston housing being mounted on the spool support means and the piston rod being mounted on the spool operatively for revolving movement of the spool to alternately move the piston rod and piston to and fro backward and forwardly within the piston housing to therby cause compression serving to brake rotary motion of the spool when venting of the piston housing is blocked or limited; piston valve means on said piston housing for selectively venting compressed air from

within said piston housing; an elongated rigid wire guide support means including an elongated member for guiding said elongated wire from said spool to a first end of the elongated member and from a second end of the elongated member above the spool support means; and a guide support mounting means for mounting said elongated rigid guide support means and said spool support means in optionally alternate positions of differing angles of the elongated member relative to said spool support means, and for latching the elongated member in a selected position of said alternate positions.

3. A portable fire excape device comprising in combination: a spool support means for mounting a spool and a piston means and a harness means thereon; a spool having elongated wire wound thereon, mounted revolvably on the spool support means; a piston means comprising a piston, a piston rod and a piston housing, the piston housing being mounted on the spool support means and the piston rod being mounted on the spool operatively for revolving movement of the spool to alternately move the piston rod and piston to and fro backward and forwardly within the piston housing to thereby cause compression serving to brake rotary motion of the spool when venting of the piston housing is blocked or limited; piston valve means on said piston housing for selectively venting compressed air from within said piston housing; an elongated rigid wire guide support means including an elongated member for guiding said elongated wire from said spool to a first end of the elongated member and from a second end of the elongated member above the support means; said elongated member being foldably collapsible along a length thereof into at least two separate end-to-end rods, and being shaped angularly such that an upper portion thereof will be extended above a head of a person wearing the device on the person's back such that a person's head is protectable against striking a wall during descent; and a guide support mounting means for mounting said elongated rigid guide support means and said spool support means in optionally alternate positions of differing angles of the elongated member relative to said spool support means, and for latching the elongated member in a selected position of said alternate positions.

4,301,893
LANTERN RINGS
Richard P. St. Jean, and Patricia M. St. Jean, both of P.O. Box 145, Floyd Knobs, Ind. 47119
Filed Jul. 27, 1979, Ser. No. 61,459
Int. Cl.³ F16N *1/00*
U.S. Cl. 184—24 **7 Claims**

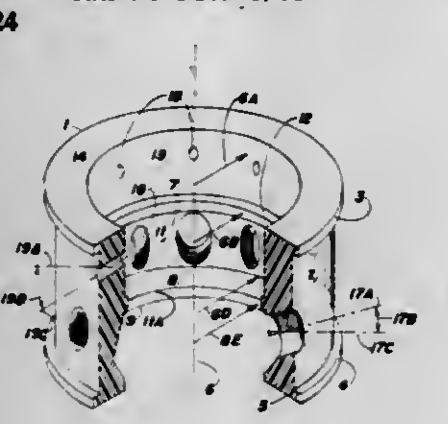

1. A lantern ring for use in a cylinder adapted to receive a shaft where the shaft is adapted for movement within the cylinder and is located in spaced relation from the sidewalls thereof with its longitudinal axis parallel to the longitudinal axis of the cylinder to define an annular packing chamber within the cylinder where the lantern ring is received within the cylinder and includes:

(a) a ring having an outer surface, an inner surface and first and second axially spaced sidewalls of selected outer diameter less than the internal diameter of the cylinder, said inner surface having a diameter greater than the outer diameter of the shaft and adapted to receive the shaft to maintain the ring in aligned relation on the shaft where first groove means of selected diameter is provided; the inner surface of the ring adjacent the first side wall with a radially inwardly projecting lip of selected diameter greater than the diameter of said shaft less than the diameter of said inner surface provided between said groove and said first sidewall defining a first opening to said ring;

(b) first and second flange means of equal length extending in spaced parallel relation, radially outwardly from, and around a portion of the outer surface of the ring so a portion of the outer periphery of the first and second flange means engages the inner surface of the cylinder so that a first annular chamber is defined by the first and second flange means, the inner surface of the cylinder and the outer surface of the ring;

(c) inwardly radially extending internal flange means of selected depth located within said ring means between the inner most edge of said first groove means and said second sidewall, and extending around a portion of the inner periphery of the ring to define a central opening in said ring of diameter greater than the diameter of said shaft and less than the diameter of said inner surface and adapted to receive said shaft;

(d) at least one first conduit means communicating with said groove means and said first annular chamber for fluid flow therebetween;

(e) at least one second conduit means communicating with said first annular chamber and the portion of the inner surface of said ring means between said internal flange means and said second side wall.

4,301,894
CALIPER TYPE BRAKE FOR BICYCLES
Kenzo Arai, c/o Kenzo Arai, In Arai Co., Ltd., 2189, Sne, Saya-cho, Ama-gun, Aichi-ken, Japan
Filed Oct. 23, 1979, Ser. No. 87,479
Claims priority, application Japan, Oct. 23, 1978, 53/146298[U]
Int. Cl.³ B62L *1/12*
U.S. Cl. 188—24.19 **2 Claims**

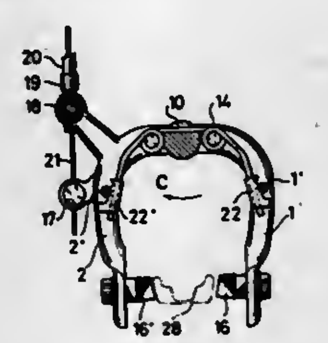

1. A caliper type brake for bicycles, comprising right and left blocks in horse-shoe shape pivoted at the center each have a spring support, brake rubbers which are attached to the ends of said right and left blocks and opposite to each other, a return spring which drives said right and left blocks to be stretched outwards, and spring adjusting devices, each being provided at one side thereof with a plurality of grooves having different heights, said devices being attached to engaging portions of said return spring constituted in said right and left blocks with the spring supports for supporting said return spring, wherein the spring supports are fitted to the grooves of said spring adjusting devices.

4,301,895
DISC BRAKES FOR RAILWAY VEHICLES
Anthony W. Harrison, Birmingham, and John P. Bayliss, Redditch, both of England, assignors to Girling Limited, Birmingham, England
Filed Apr. 2, 1979, Ser. No. 25,863
Claims priority, application United Kingdom, Apr. 8, 1978, 13860/78
Int. Cl.³ B61H *5/00;* F16D *65/02*
U.S. Cl. 188—59 **13 Claims**

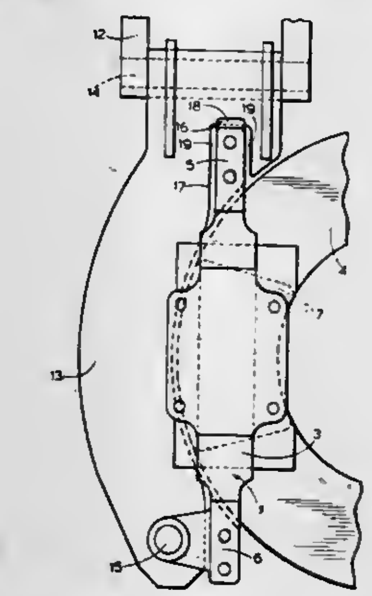

1. A disc brake for a railway vehicle comprising a rotatable disc, a stationary drag-taking member adjacent to said disc, a rigid caliper straddling the peripheral edge of said disc and including opposed limbs located on opposite sides of said disc, friction pads for engagement with opposite faces of said disc located in said caliper, actuating means associated with one of said limbs for applying one of said friction pads directly to an adjacent one of said faces of said disc, the other of said friction pads being applied to the other one of said faces of said disc by the reaction on said caliper of said actuating means which causes said caliper to move with respect to said disc, a drag-transmitting arm carrying said caliper from said drag-taking member, a pivotal connection for connecting one end of said arm to said drag-taking member for pivotal movement about an axis normal to the axis of said disc, a spherical joint for coupling said caliper to said arm, and a restraint connection between said arm and said caliper for permitting small movements of said caliper relative to said arm in axial and radially transverse directions, for restraining larger subsequent movements of said caliper in said directions, and for restoring said caliper to a neutral position when said brake is not applied.

4,301,896
CONTROLLABLE PIVOT INCORPORATING INDEPENDENT DRAG AND LOCKING BRAKES
Robert E. Miller, Vaucluse, Australia, assignor to Universal Fluid Heads (Aust.) Pty. Ltd., Rushcutters Bay, Australia
Filed Jun. 4, 1979, Ser. No. 45,166
Int. Cl.³ F16D *65/08*
U.S. Cl. 188—70 R **4 Claims**

1. A controllable pivot comprising a barrel, a shaft rotatable within said barrel, a drag brake actuable between said shaft and said barrel to provide a controllable amount of resistance to rotation therebetween, and a locking brake actuable independently of said drag brake to prevent rotation between said shaft and said barrel, said locking brake being a floating band brake comprising a band arranged to substantially encircle said shaft, and two free ends extending outwardly from said band away from said shaft, one first said free end being arranged to abut an abutment in or on said barrel and the other second said free end

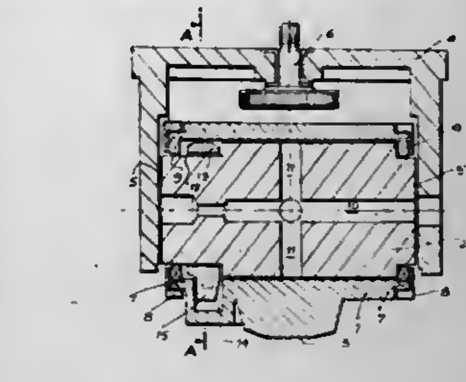

being movable towards said first free end by way of an actuation lever to cause said band to contract and grip said shaft.

4,301,897
SLACK ADJUSTER
Frank T. Cox, Jr., Villa 111 Imperial Southgate, Lakeland, Fla. 33803
Filed Dec. 13, 1979, Ser. No. 103,048
Int. Cl.³ F16D *65/56*
U.S. Cl. 188—196 BA **5 Claims**

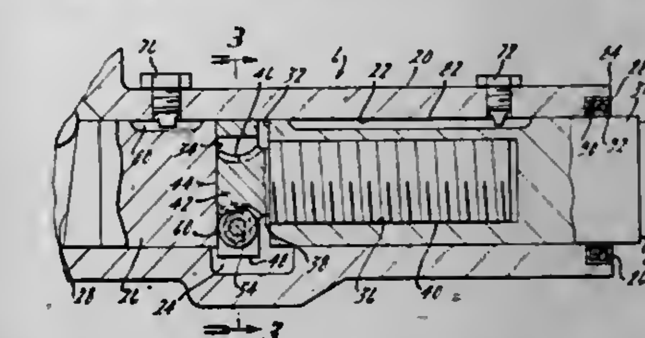

1. An automatic or manually adjustable slack adjuster for inclusion in a reciprocating force transmitting mechanical mechanism and which increases in length along the path of mechanism movement following mechanism movement exceeding a predetermined magnitude, said slack adjuster including: a housing having an elongate generally smooth walled passage having a longitudinal axis extending along said path, a force input member having a smooth outer surface and being partially telescopically and slidingly received in one end of said passage, an elongate force output member having a smooth outer surface and being partially telescopically and slidingly received in the other end of said passage and spaced apart from said input member within said passage, the end of one of said members proximate the other of said members having an internally threaded blind bore formed therein, means preventing relative rotation between said housing and said members while permitting relative sliding movement between said housing and said members along said axis, an elongate adjusting screw having external threads formed along a first portion of its length, said first portion being at least partially telescopically and threadably received in said blind bore in an initial position, a worm wheel on a second portion of said adjusting screw, the end of said adjusting screw proximate said worm wheel abutting the end of said other member within said passage, a shaft having a worm gear thereon, mounting means secured to said other member within said passage for unitary linear movement with said other member along said axis and mounting said shaft for movement therewith along said axis while permitting rotation of said shaft about its own axis and in a position wherein said shaft extends transversely of said axis across said passage with said worm gear engaging said worm wheel, and sensing means secured to said shaft and said housing and sensing linear shaft movement of a predetermind magnitude in a first direction along said axis and causing rotation of said shaft upon subsequent reciprocal shaft movement opposite

to said first direction only after said shaft movement of a predetermined magnitude, whereby the adjusting screw is rotated in threaded relationship to said one member causing said adjusting screw to become at least partially withdrawn from said initial position in said blind bore of said one member.

4,301,898

PEACE OFFICER'S EQUIPMENT BAG

Stephan E. Plough, 15805 Oak Valley Rd., and David L. Swartzendruber, P.O. Box 1176, both of Ramona, Calif. 92065

Filed Sep. 8, 1980, Ser. No. 184,854

Int. Cl.³ A45C *11/00*

U.S. Cl. 190—52 **5 Claims**

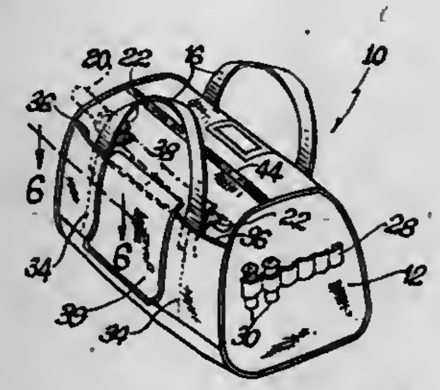

1. A peace officer's equipment bag comprising:

(a) an elongated flexible pouch having two side walls and two end walls;

(b) a pair of carrying straps each secured to said side wall by both ends and defining loops extendable over said pouch to permit grasping said loops as handles;

(c) a pair of Velcro retainer straps secured to said pouch just above the points of securement of one of said carrying straps, said retainer straps being sufficiently long to engage a police baton such that when said baton is so engaged and said straps are grasped for carrying said bag, said baton is supported at least in part by said one carrying strap; and

(d) a pocket defined externally on one of said walls and having an open top with a Velcro closure for holding a pair of handcuffs for quick one-handed access.

4,301,899

SYSTEM FOR AUTOMATICALLY CONTROLLING AN ELECTRICALLY PROPELLED TRACTION VEHICLE TRAVERSING A GAP IN WAYSIDE SOURCE OF POWER

Lloyd W. McSparran; Paul T. Ryan, both of Erie, and Russell M. Smith, North East, all of Pa., assignors to General Electric Company, Erie, Pa.

Filed Apr. 21, 1980, Ser. No. 142,292

Int. Cl.³ B60L *1/00*

U.S. Cl. 191—3 **16 Claims**

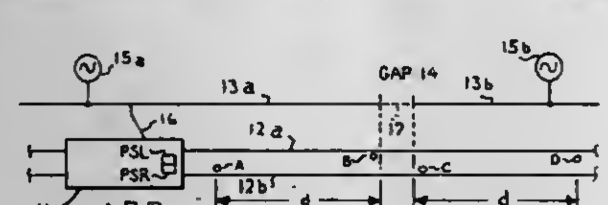

1. For use in combination with an electrically propelled land vehicle moving along a predetermined path in a right of way that is paralleled by a sectionalized wayside conductor, adjacent sections of said conductor being respectively energized by different sources of electric power and being electrically insulated from one another at a predetermined transition point along said right of way, said vehicle including a current collector that cooperates with said wayside conductor to provide on board the vehicle a voltage whose magnitude is determined by the voltage magnitude of the power source energizing the particular section of said conductor with which said collector is cooperating, said vehicle additionally including controllable power conditioning means having source and load terminals, means including circuit interrupting means for connecting said source terminals to said current collector, and at least one electric motor connected to the load terminals of said power conditioning means for propelling the vehicle along said right of way in a desired direction as determined by alternative forward and reverse command signals, said power conditioning means including switchable means having alternative states in at least one of which said switchable means is effective to reduce the magnitude of voltage applied to said source terminals, said circuit interrupting means being operable from closed circuit to open circuit positions and vice versa when commanded by trip and reclose signals, respectively, an improved system for automatically controlling said switchable means and said circuit interrupting means in response to the vehicle traversing said predetermined transition point, wherein the improvement comprises:

a. at least first, second, third, and fourth stationary markers adapted to be placed at predetermined locations in said right of way in the vicinity of said predetermined transition point, the locations of said first and second markers being on one side of said transition point with said first marker being spaced farther than said second marker from said transition point and the locations of said third and fourth markers being on the other side of said transition point with said fourth marker being spaced farther than said third marker from said transition point;

b. Proximity sensing means placed on said vehicle so as to pass in close proximity to said stationary markers as the vehicle moves along said right of way in the vicinity of said predetermined transition point, said proximity sensing means being arranged to provide, upon passing said first marker and also upon passing said third marker, discrete output signals on a first line and to provide, upon passing said second marker and also upon passing said fourth marker, discrete output signals on a second line;

c. first means responsive to a forward command signal and to the output signals on said first line for producing a first control signal that starts when said proximity sensing means provides an output signal indicating it is passing said first marker as the vehicle approaches said predetermined transition point from said one side and that terminates when said sensing means provides the next output signal on said first line thereby indicating it is passing said third marker on the other side of said transition point;

d. second means responsive to a forward command signal and to the output signals on said second line for producing a second control signal that starts when said proximity sensing means provides an output signal indicating it is passing said second marker on said one side of said transition point, said second means also being responsive to said next output signal that is provided on said first line for terminating said second control signal simultaneously with the termination of said first control signal when said third marker is passed;

e. means responsive to said first control signal for supplying a trip signal to said circuit interrupting means, whereby the circuit between said power conditioning means and said current collector is open as the vehicle traverses said transition point;

f. means connected to said current collector for measuring the voltage on said collector and, based on that measurement, for indicating the desired state of said switchable means;

g. means connected to said voltage measuring means and effective only when said circuit interrupting means is open and the actual state of said switchable means does not agree with said desired state for actuating said switchable means to its desired state;

h. verifying means connected to said voltage measuring means and responsive to the state of said switchable means for producing an agree signal whenever the actual and desired states of said switchable means are in agreement; and

i. means connected to said first and second means and responsive to said agree signal for supplying a reclose signal to said circuit interrupting means when said agree signal is produced and both of said first and second control signals are terminated.

4,301,900

LOCK-UP TORQUE CONVERTER WITH CLUTCH PISTON ENGAGEABLE WITH CONVERTER COVER

Yoshio Sunohara, and Kunio Ohtsuka, both of Yokohama, Japan, assignors to Nissan Motor Company, Limited, Yokohama, Japan

Filed Mar. 14, 1979, Ser. No. 20,310

Claims priority, application Japan, Apr. 4, 1978, 53-38855

Int. Cl.³ F16D *47/06*

U.S. Cl. 192—3.3 **2 Claims**

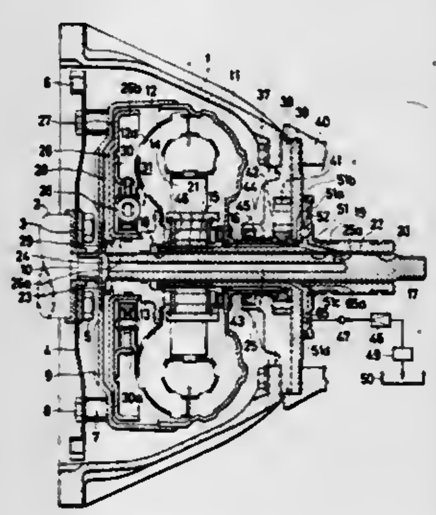

1. In a lock-up torque converter the combination of:

an input member;

a converter cover driven by said input member;

a pump impeller secured to said converter cover and forming therewith a chamber;

an output shaft;

a turbine runner within said chamber connected to said output shaft;

a clutch piston mounted within said chamber and drivingly connected to said turbine runner;

said clutch piston being engageable with said converter cover to lock said turbine runner with said pump impeller and forming therewith a clutch chamber only when said clutch piston is in engagement with said converter cover;

a converter housing surrounding said converter cover;

a stationary sleeve fixed to said converter housing so as to surround part of said output shaft, said part of said output shaft having a uniform diameter;

first, second and third plain non-perforate bushes disposed on said uniform diameter part of said output shaft at spaced intervals therealong for journalling it in said stationary sleeve member and defining between said output shaft and said stationary sleeve first and second closed annular chambers, said first chamber being defined between said first and second bushes and said second chamber being defines between said second and third bushes, said first, second and third bushes having the same radial dimensions;

said output shaft being formed with an elongate blind bore which fluidly communicates with said clutch chamber;

said output shaft being also formed with a radial passage fluidly communicating said elongate bore with said second chamber;

a lock-up valve;

first passage means fluidly communicating said lock-up valve and said second chamber;

second passage means for providing fluid communication with the inside of said pump impeller; and

third passage means for providing fluid communication with the inside of said turbine runner, said third passage means including said first chamber and communicating with said second passage means for circulating fluid discharged from said turbine runner to said second passage means for reintroduction into said pump impeller.

4,301,901

COMBINED FOOT BRAKE AND PARKING BRAKE

Louis T. Jensen, Terre Haute, Ind., assignor to J.I. Case Company, Racine, Wis.

Filed Mar. 21, 1980, Ser. No. 133,369

Int. Cl.³ B60K *41/26*

U.S. Cl. 192—4 C **5 Claims**

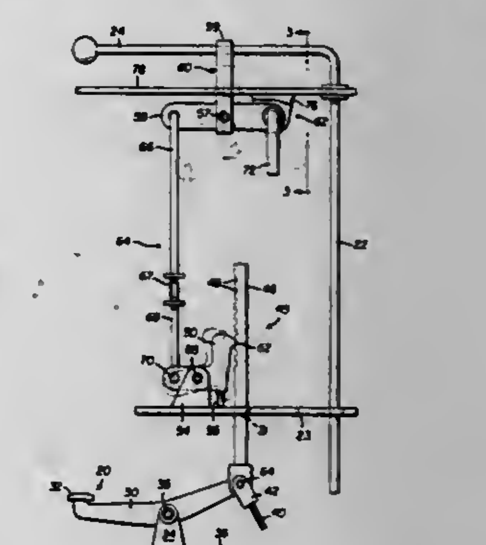

1. A combined brake actuating mechanism for a machine having a brake and hydrostatic transmission, a transmission shift means rotatable about one axis into forward, reverse, and neutral operating positions to control the input to said hydrostatic transmission, said combined brake actuating mechanism comprising:

brake control means including a brake control arm rotatable about a pivot axis, and a brake cable connected to said control arm spaced from said pivot axis, the rotation of said brake control arm tensioning said brake cable to actuate said brake;

parking brake latch means connected to said control arm, and said latch means being movable from a disengaged position to an engaged position for relesably retaining said brake cable tensioned to lock said brake;

a pivotal lock arm assembly connected to said parking brake latch means, control lever means connected to said pivotal lock arm assembly for selectively pivoting said lock arm assembly in a first direction into locking engagement with said transmission shift arm when said shift arm is in its neutral position only, said parking brake latch means being simultaneously moved into its engaged position in response to pivotal movememt of said lock arm assembly in said first direction for retaining said brake cable tensioned to lock said brake.

4,301,902

COMBINATION VEHICLE SPEED AND DIRECTION CONTROL

Stephen L. Gatsos, and Jerry A. Gardner, both of Indianapolis, Ind., assignors to Indus Wheel Company Div. of Carlisle Corporation, Cincinnati, Ohio

Filed Sep. 4, 1979, Ser. No. 72,183

Int. Cl.³ B60K *41/24*

U.S. Cl. 192—11 **24 Claims**

1. A vehicle having an engine driving a clutch assembly having a disengaged position and a range of low to high speed operating positions, the clutch assembly driving a transmission

having a neutral position, a forward gear and a reverse gear, and a combination vehicle speed and direction control including an actuating lever mounted for movement on the vehicle, first means for coupling the actuating lever to the transmission, second means for coupling the actuating lever to the clutch assembly, the actuating lever having a neutral position in

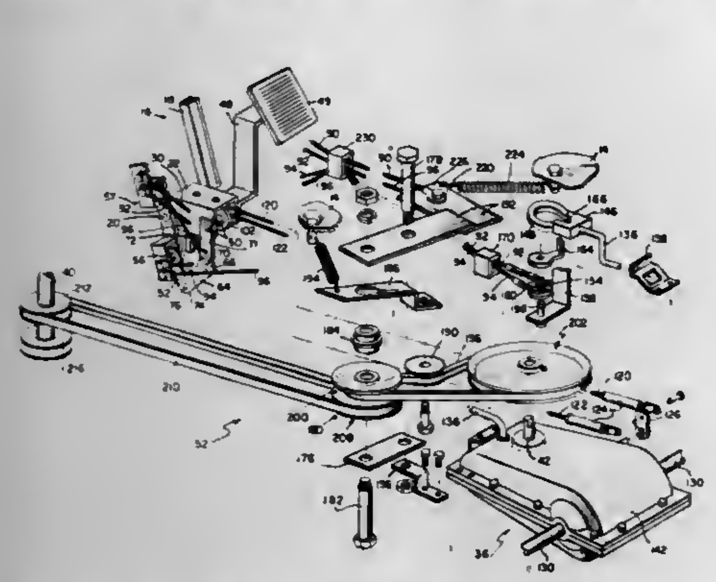

which the transmission is in neutral and the clutch assembly is in said disengaged position, a first movement of the actuating lever from the neutral position moving the transmission into said forward gear and the clutch assembly into the range of operating positions, and a second movement of the actuating lever moving the transmission into the reverse gear and the clutch assembly into the range of operating positions.

4,301,903
WHEEL HUB WITH A FREEWHEEL
Takazi Nakano, No. 1, 122, Hikiso Nishimachi, Sakai, Osaka Pref., Japan
Filed Sep. 14, 1979, Ser. No. 75,843
Claims priority, application Japan, Feb. 8, 1979, 54-14020
Int. Cl.³ F16D *41/30*
U.S. Cl. 192—64 **5 Claims**

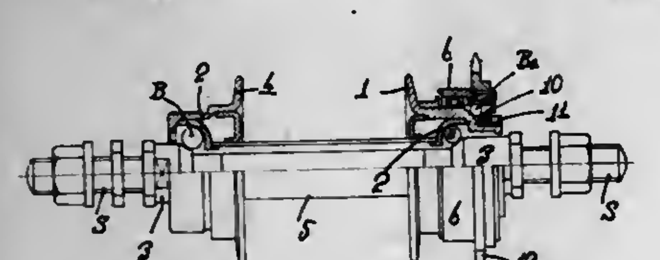

1. A wheel hub with a freewheel, comprising:
a hub shaft having a hub portion on one end, a single tapered bearing surface thereon, and a threaded portion on the opposite end from said hub portion;
a single annular array of steel balls against said bearing surface;
a gear ring around said hub shaft and having a groove in the internal peripheral surface thereof in which said balls are engaged;
a sprocket wheel on said gear ring;
a ratchet means between said hub shaft and said gear ring and positioned along said hub shaft between said hub portion and said bearing surface;
a screw cap threaded on said threaded portion of said hub shaft and having a further tapered bearing surface supporting said array of steel balls; and
a lock nut on the threaded portion of said hub shaft against said screw cap to prevent loosening of said screw cap.

4,301,904
MULTIPLE DISC CLUTCH
Karl G. Ahlen, Bromma, Sweden, assignor to S.R.M. Hydromekanik Aktiebolag, Stockholm-Vallingby, Sweden
Filed Aug. 15, 1979, Ser. No. 66,538
Claims priority, application United Kingdom, Nov. 6, 1978, 43314/78
Int. Cl.³ F16D *13/52, 13/72, 25/063*
U.S. Cl. 192—70.12 **14 Claims**

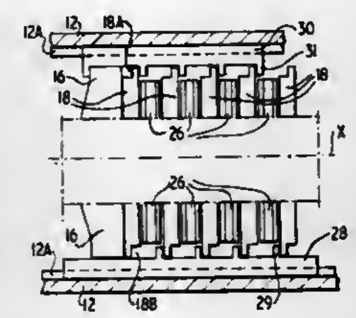

1. A multiple disc clutch including first and second sets of interleaved and axially movable clutch discs,
each of the sets being connected to a part through a spline which permits each set to rotate with its respective part and to move axially, wherein, when the clutch is engaged, the two said parts rotate together,
a servo-means for axially engaging the discs of the first set into engagement with the discs of the second set to close the clutch,
means fixedly connected to the servo-means for movement therewith for positively, axially displacing each of the discs of the first set towards an open, disengaged position, out of engagement with the discs of the second set,
first restraining means for positively limiting movement of all of the axially movable discs of the first set in the clutch opening axial direction,
and said means fixedly connected to the servo-means also being a second restraining means for limiting movement of all of the axially movable discs of the first set, when the clutch is in a disengaged, open condition, in the clutch closing axial direction.

4,301,905
ROTATION SHAFT MACHINE
Josef Brock, Viersen, and Paul Surkamp, Krefeld, both of Fed. Rep. of Germany, assignors to Maschinenfabrik Carl Zangs Aktiengesellschaft, Krefeld, Fed. Rep. of Germany
Filed Sep. 21, 1979, Ser. No. 77,826
Claims priority, application Fed. Rep. nf Germany, Sep. 22, 1978, 2841279
Int. Cl.³ F16D *11/06*
U.S. Cl. 192—71 **9 Claims**

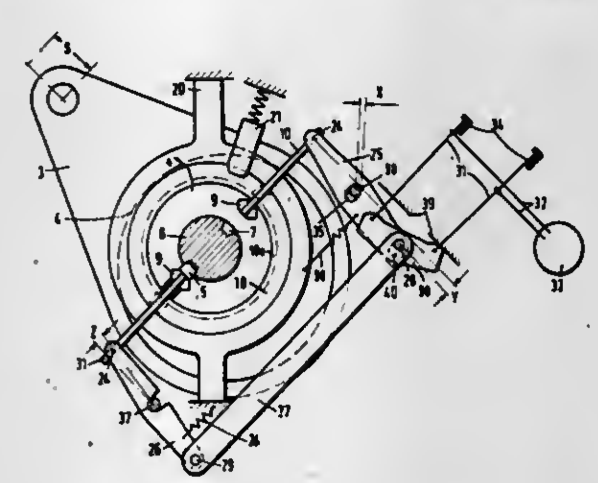

1. In a rotation shaft machine with a wedge coupling between a drive shaft and an eccentric device for the shaft movement, with which the wedge is mounted in a radially extending recess of an eccentric disc and in two coupling positions which lie diametrically opposite to one another according to a pattern is couplable in and decouplable out from an axially extending groove of the drive shaft. the improvement wherein
the wedge is formed with a groove which is open in the axial direction,
a switching rod having a coupling member and disposed at each of the coupling positions,
said coupling member overlapping into said groove of the wedge,
the switching rod constituting means for being controllable according to the pattern.

4,301,906
ELECTROMAGNETIC CLUTCHES
Isamu Shirai, Isesaki, Japan, assignor to Sankyo Electric Company Limited, Isesaki, Japan
Filed Jan. 3, 1979, Ser. No. 720
Claims priority, application Japan, Jan. 10, 1978, 53-1262[U]; May 16, 1978, 53-64531[U]
Int. Cl.³ F16D *27/10*
U.S. Cl. 192—84 C **3 Claims**

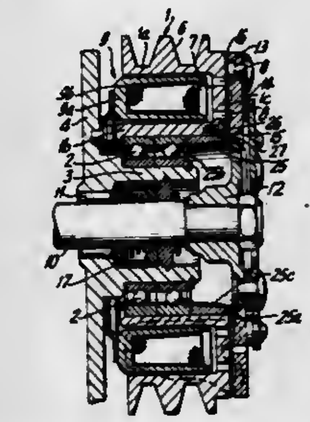

1. In an electromagnetic clutch comprising bearing means, a first rotatable member of magnetic material rotatably supported on said bearing means and including an outer annular cylindrical portion, an inner annular cylindrical portion, and an axial end plate portion connecting between said outer and inner annular cylindrical portions at an axial end thereof to form an annular hollow portion therebetween, an annular electromagnet stationarily disposed in said hollow portion and comprising an annular magnetic housing and an annular electromagnetic coil therein, a second rotatable shaft member, a shaft seal around said second rotatable shaft member, a hub member secured on a projected end of said second rotatable shaft member, magnetic armature means supported on and around said hub member with a radial gap therebetween so as to be capable of limited axial movement and facing said axial end plate portion with an axial gap therebetween, said armature means being attracted to the axial end plate portion when said electromagnet is energized, the improvement which comprises: a magnetic ring fixedly fitted into said inner annular cylindrical portion in an axial end adjacent to said axial end plate portion, whereby said inner annular cylindrical portion is substantially thicker at said axial end thereof than the other part thereof, said magnetic ring being provided with an annular flange axially outwardly extending from the axial end thereof into said radial gap between said magnetic armature means and said hub member, an inner surface of said magnetic ring being formed in a tapered surface to diverge toward the extended end of said annular flange, whereby oil leaked from said shaft seal is guided along said tapered surface to be discharged outside through said radial gap.

4,301,907
FRICTION CLUTCH DRIVEN PLATE
Ronald D. Carpenter, Lower Boddington, and Philip A. Stone, Harbury, both of England, assignors to Automotive Products Limited, Leamington Spa, England
Filed Feb. 26, 1979, Ser. No. 14,998
Claims priority, application United Kingdom, Feb. 28, 1978, 7836/78
Int. Cl.³ F16D *3/4*
U.S. Cl. 192—106.2 **9 Claims**

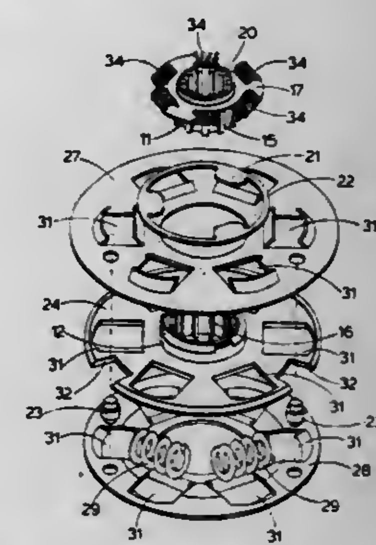

1. A friction clutch driven plate having:
an inner hub;
a radially outwardly projecting peripheral flange fixedly attached to with said inner hub and located at one end portion thereof; and which has spring seatings thereon,
an outer hub concentric with and capable of limited angular movement about said inner hub and having one end portion adjacent said flange;
a co-axial annular plate fixedly attached to with said outer hub and located at the one end portion thereof and having spring seatings thereon that are arranged in substantially the same plane as said spring seatings on said flange;
a friction facing carrier mounted on said outer hub and capable of restrained limited angular rotation about both said hubs, and springs acting between opposed spring seatings on said flange and said plate to oppose relative movement between said inner and outer hubs.

4,301,908
ANTIVIBRATION DEVICE FOR A CLUTCH PEDAL
Syozi Fukuda, Tokyo; Teruo Munakata, Koganei, and Masashi Matsuki, Akishima, all of Japan, assignors to Nissan Motor Co., Ltd., Yokohama, Japan
Filed Sep. 17, 1979, Ser. No. 76,473
Claims priority, application Japan, Nov. 22, 1978, 53-145052
Int. Cl.³ F16D *25/12*
U.S. Cl. 192—109 F **5 Claims**

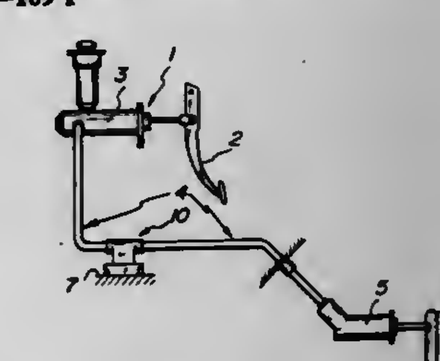

1. An antivibration device for a clutch pedal of a clutch operating mechanism including a master cylinder in which a hydraulic pressure is created by depressing said clutch pedal, an operating cylinder actuated by said hydraulic pressure caused in the master cylinder to operate a withdrawal lever

and an oil damper provided in a hydraulic passage communicating said master cylinder with said operating cylinder, wherein said oil damper comprises an oil chamber having ports connected to passages to said master cylinder and said operating cylinder, respectively, a piston slidably fitted in said oil chamber, a resilient member for absorbing fluctuations in hydraulic pressure in said oil chamber through said piston and orifice-forming members disposed in said ports of the oil chamber, respectively, to cause a pressure drop therebetween.

4,301,909
VENDING APPARATUS
John D. Saavely, 1700 Herman Dr., #506, Houston, Tex. 77004
Filed Jul. 25, 1979, Ser. No. 60,416
Int. Cl.³ G07F *11/48*
U.S. Cl. 194—2 **24 Claims**

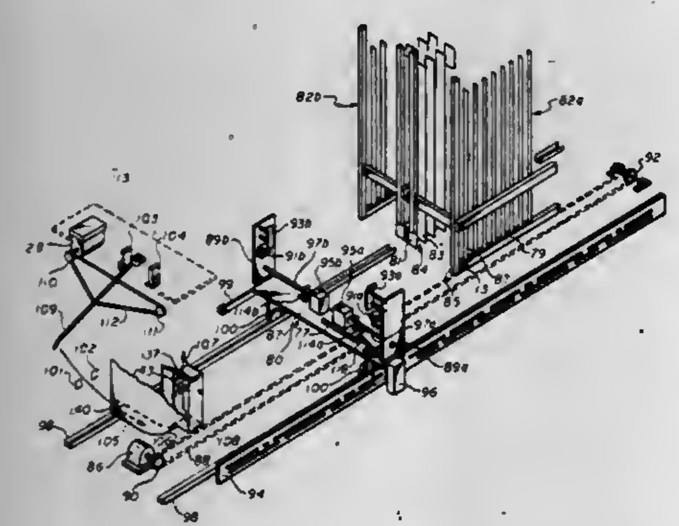

1. In combination a vending apparatus comprising:

(1) a storage area comprising a plurality of vertical chutes for storing rectangular objects stacked vertically therein, each of said chutes having a fixed ledge at one side of the lower end of the rack and a movable ledge opposite said fixed ledge and biased toward said fixed ledge for holding and releasing said objects stacked in said chute;

(2) an object retrieval mechanism comprising a carriage mounted on a guide and movable below said vertical chutes and in operational association therewith, means to drive said carriage, release means mounted on said carriage for releasing said object from a chute onto said carriage;

(3) a delivery area associated with the carriage guide means whereby said carriage may approach said delivery area, said delivery area comprising a compartment having inwardly and upwardly sloping walls forming a vertical opening at their upward terminus and having a platform extending therefrom;

(4) means to move said object from said carriage into said delivery area comprising a pivotally mounted arm and means to move said arm from a resting position about said pivot to move said object through said compartment and said vertical opening onto said platform, said arm moving in a predetermined path; and

(5) electronic control means comprising means to sense an empty chute, means to price each chute individually and alterably, means to receive currency, means to compare accumulated currency with the price for said chute, means to select a chute for delivery of a object therefrom onto said carriage, and carriage control means to direct said carriage to the selected chute, to operate said release means on said carriage to drop an object from the selected chute onto said carriage, to direct said carriage to the delivery area and to deliver an object from said carriage into said delivery area.

4,301,910
SELF-PROPELLED RECEPTACLE-CONVEYOR BACKFILLING APPARATUS
Robert Price, Caledonia, Mich., assignor to Kros Konveyors, Inc., Grand Rapids, Mich.
Filed Aug. 30, 1979, Ser. No. 71,394
Int. Cl.³ B65G *41/00*
U.S. Cl. 198—304 **4 Claims**

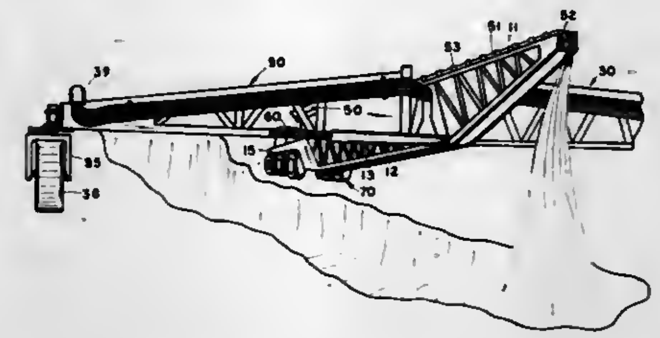

1. A conveying machine for trenching operations, said machine having an elongated boom forming a primary body; a driven material conveyor member extending substantially the length of said body, a receiving hopper at one end of said conveyor member, a gooseneck platform extending forwardly from said body and a primary power plant mounted on said gooseneck, a propelling unit; means for detachably securing said propelling unit to said machine beneath said gooseneck; a pair of leg booms pivotally mounted to said primary body one on each side and adjacent the rearward portion thereof for outward swinging movement; a pair of wheel mounts one beneath the outer end of each of said leg booms and each having an upwardly extending spindle, a verticle spindle receiving socket at the outer end of each of said leg booms rotatably receiving one of said spindles; a ground engaging wheel in each of said mounts; a pair of first powered elements each connected to said body and to one of said leg booms for pivoting said leg booms with respect to said primary body; a pair of second powered elements each connected to one of said wheel mounts for rotating said mounts and wheels about their spindles; control means mounted on each of said leg booms and connected to said first and second powered elements for controlling their operation.

4,301,911
APPARATUS FOR HANDLING A TUBULAR CARTON BLANK
Ronald T. Albo, Los Gatos, Calif., assignor to Pneumatic Scale Corporation, Quincy, Mass.
Filed Jul. 18, 1979, Ser. No. 58,483
Int. Cl.³ B65G *47/24*
U.S. Cl. 198—412 **5 Claims**

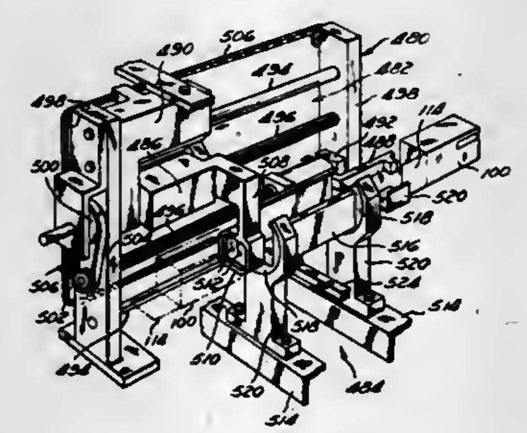

1. In an apparatus for fabricating a liquid-tight carton, a device for axially rotating a carton blank formed in a tubular configuration comprising:

a tubular fixture sized to receive said carton blank;

means connected to said fixture to selectively rotate said fixture between a first and second position; and

a pair of arm members, one of said arm members inserting a carton blank into said fixture when said fixture is in said first position, and the other of said arm members ejecting said carton blank from said fixture when said fixture is in said second position;

an elongate aperture formed in said tubular fixture; and

an actuator for sequentially circulating said arm members in a single direction along said elongate aperture.

4,301,912
DIVIDER SCREWS
Jack S. Cooley, Atlanta, and Roger A. Ziecker, Lawrenceville, both of Ga., assignors to The Mead Corporation, Dayton, Ohio
Filed Mar. 21, 1980, Ser. No. 132,417
Int. Cl.³ B65G *47/68*
U.S. Cl. 198—436 **14 Claims**

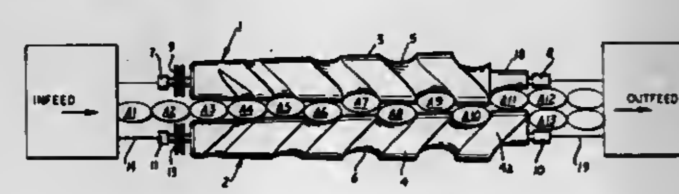

1. Apparatus for dividing a single row of articles into two rows, said apparatus comprising a pair of complementary closely spaced parallel screws arranged with the spiral thread of one screw in coincidental relation with the spiral groove of the other screw, and means for rotating said screws so that alternate articles of a row of articles fed to the infeed ends of said screws and along a longitudinal path parallel to the axes thereof are engaged by the thread of each screw and moved laterally into the groove of the other screw to form two rows of articles and the thread of at least one of said screws being modified at the outfeed end thereof so as to render said one screw less effective to impart longitudinal movement to an article at the outfeed end thereof than the other screw and thereby transversely to align adjacent articles in the two rows with each other.

4,301,913
CHAIN SCRAPER CONVEYOR CHUTE
Ernst Braun, and Gert Braun, both of Essen-Heisingen, Fed. Rep. of Germany, assignors to Halbach & Braun, Fed. Rep. of Germany
Filed Jan. 28, 1980, Ser. No. 115,897
Claims priority, application Fed. Rep. of Germany, Feb. 7, 1979, 2904575
Int. Cl.³ B65G *19/28*
U.S. Cl. 198—735 **7 Claims**

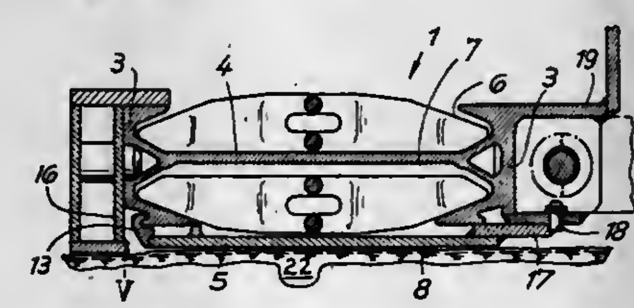

1. A conveyor chute for chain scraper conveyors, which are adapted to overlie a floor of a mining seam, comprising, a plurality of chute sections arranged in end-to-end relationship, each chute section having laterally spaced apart forehead and filling side sidewalls, a bottom plate extending between said sidewalls and dividing each chute section into upper and lower stringers, said forehead side sidewall having a foot portion forming a flat bottom extending outwardly of the associated sidewall toward the opposite sidewall and including a recess above the flat bottom and a male hinge portion below the recess, a baseplate extending between said sidewalls having a female hinge portion secured along one end thereof with a female recess into which said male portion extends, said hinge portion including a bevelled top edge and a bevelled bottom edge both outwardly facing said forehead sidewall which permits the pivotal movement of said baseplate.

4,301,914
ACCUMULATING CONVEYOR
Robert Krammer, deceased, late of White Bear Lake, Minn. (by Ruth Krammer, legal representative), assignor to Sandard Conveyor Company, North St. Paul, Minn.
Continuation-in-part of Ser. No. 831,756, Sep. 9, 1977, abandoned, which is a continuation-in-part of Ser. No. 688,255, May 20, 1976, abandoned. This application Sep. 15, 1978, Ser. No. 942,660
Int. Cl.³ B65G *13/06*
U.S. Cl. 198—781 **7 Claims**

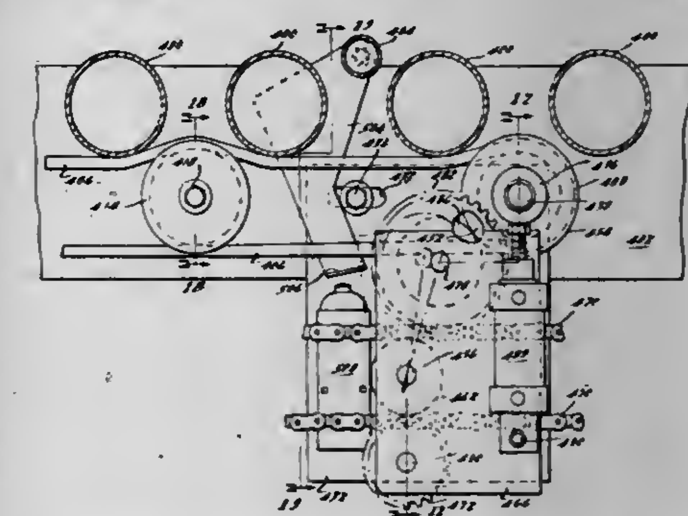

1. A drive module for a conveyor having a plurality of load carrying rollers arranged in generally parallel, side-by-side relationship and mounted for rotation on transversely extending shafts supported by parallel side rails, and power means comprising an endless powered force transmitting member disposed below said load carrying rollers, said drive module comprising:

(a) a generally vertically extending supporting device mounted to one of said side rails,

(b) guide means supported by said supporting device for supporting said powered endless force transmitting member;

(c) an endless belt rotationally supported in part by said supporting device below said load carrying rollers, said belt being in frictional driving engagement with a plurality of said rollers;

(d) a rotatable friction wheel operatively connected to said belt so that when said friction wheel is rotated it will cause said belt and load carrying rollers to rotate;

(e) a rotatable pressure roller movable between a first position out of engagement with said friction wheel and a second position in which it drivingly engages said friction wheel, said pressure roller being in driving engagement with said force transmitting member;

(f) support means on said supporting device for supporting said pressure roller for movement between said first and second positions, said second position being said driving position; and

(g) actuating means for moving said support means from said first position to said second positions.

4,301,915

SNAP-ON ATTACHMENT FOR ROLLER CHAIN CONVEYORS

Anthony J. Michalik, Springfield, Mass.; Peter L. Thiel, Birmingham, Mich.; Ronald D. Elson, Merrill, Mich., and James A. Palmer, Saginaw, Mich., assignors to Rexnord Inc., Milwaukee, Wis.

Filed Jan. 11, 1980, Ser. No. 111,406

Int. Cl.[3] B65G *17/06*

U.S. Cl. 198—851 **10 Claims**

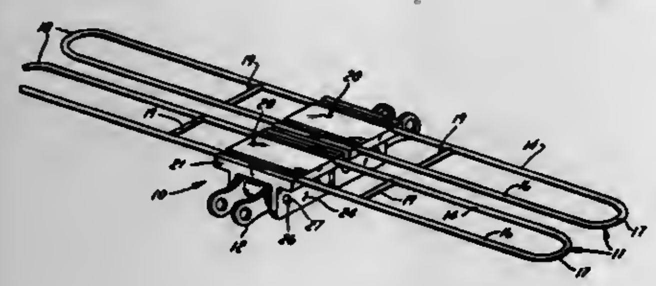

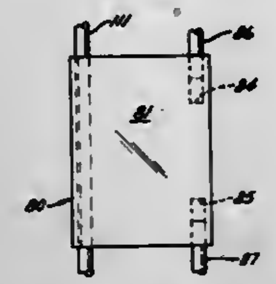

1. A roller chain conveyor comprising: an articulated roller chain including at least some extended connecting pins, a multiplicity of wire cross flights each having a generally C-shaped configuration, and a multiplicity of support attachments for mounting said cross flights onto said roller chain; said attachments each comprising: a base; laterally spaced legs depending from said base; said legs having therein means for receiving the ends of said extended connecting pins for releasably holding said attachment on said roller chain; said base having blind holes therein for releasably receiving the unattached ends of said cross flight and said base having a groove positioned in the leading edge of said base for releasably mounting the extended portion of said cross flight on said base.

4,301,916

CARRYING CASE FOR CONTRACEPTIVE DEVICES

Susan Handelman, 2910 Orchard La., Wilmette, Ill. 60091

Filed Apr. 7, 1980, Ser. No. 138,213

Int. Cl.[3] F42B *39/02*

U.S. Cl. 206—38 **3 Claims**

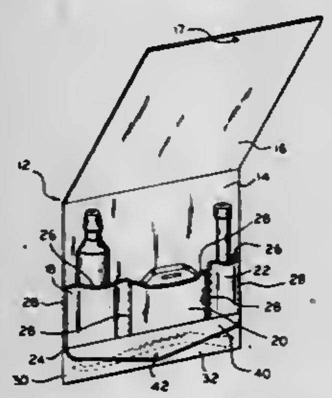

1. A compact carrying case for contraceptive devices comprising

a bottom;

more than one pouch attached to said bottom, each of said pouches having an entrance side and a common bottom edge;

means to elastically close said entrance side of each of said pouches;

a compartment attached to said bottom adjacent said common bottom edge, said compartment having an entrance edge;

a flap attached to said bottom near said common bottom edge and adjacent said entrance edge;

means for fastening said flap to said compartment to cover said entrance edge;

a lid hingedly attached to said bottom near the entrance sides of said pouches; and

means for fastening said lid to the outside of said compartment to cover said pouches and said compartment.

4,301,917

MEANS FOR HOLDING FLEXIBLE SHEETS

Herbert G. Ancell, San Rafael, Calif., assignor to BankAmerica Corporation, San Francisco, Calif.

Filed Mar. 28, 1980, Ser. No. 132,814

Int. Cl.[3] B65D *83/12;* **A47F** *1/06*

U.S. Cl. 206—39.5 **5 Claims**

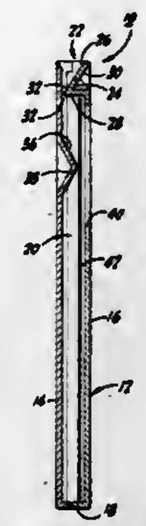

1. A re-usable multiple-use holder for transporting generally flat, flexible sheets and for protecting such sheets against damage during such transport, as through the mails or the like; said holder comprising a generally rigid body defined by opposed spaced walls providing a sheet receiving cavity therebetween; an access slot defined by said walls at one end of said holder through which individual sheets selectively may be inserted into and removed from said cavity; means positioned within said cavity and extending from one of said walls toward the other of said walls partially blocking said access slot, said blocking means having an inclined outer surface, which facilitates introduction of individual sheets through said access slot into said cavity, and an abrupt inner surface, which prevents unwanted removal of individual sheets from said cavity through said access slot; rigid camming means positioned within said cavity and extending from said other wall toward said one wall, said camming means having an inclined surface generally facing said access slot over which individual sheets introduced into said cavity are guided, said camming means being positioned adjacent said blocking means and maintaining individual sheets positioned within said cavity in generally flat relationship with respect to said one wall and generally in alignment with said abrupt surface of said blocking means so that unwanted removal of individual sheets from said cavity is precluded; said one wall having an opening therein generally opposite said camming means to permit manual access to individual sheets positioned within said cavity whereby an individual sheet, or individual sheets in sequence, may be manually contacted and guided over said camming means and around and over said blocking means to be freed of the blocking effect of said blocking means and introduced into said access slot for selective removal from said holder.

4,301,918

CONTAINER CARRIER PREFORM

Robert C. Olsen, Streamwood, Ill., assignor to Illinois Tool Works Inc., Chicago, Ill.

Filed May 19, 1980, Ser. No. 151,029

Int. Cl.[3] B65D *71/02*

U.S. Cl. 206—150 **8 Claims**

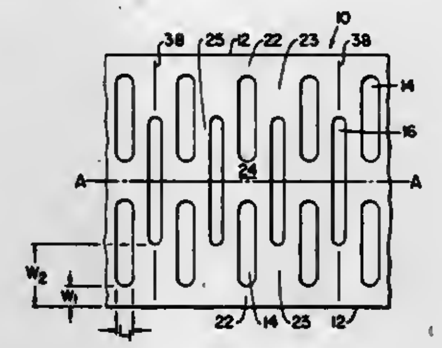

1. A container carrier preform strip adapted to be stretchingly, permanently deformed in the longitudinal direction of the strip to create a package making device for a plurality of substantially identical containers, the preform strip including a plurality of narrow, elongated slot means extending generally perpendicular to the longitudinal axis of the strip all of which are completely confined within the lateral side edges of the strip, the plurality of slot means comprising alternating spaced series of slot means, a first series including a pair of laterally aligned slots extending on both sides of the longitudinal axis and spaced therefrom with the laterally outermost extremities of each of the pair of slots spaced from the associated lateral edge, a first strip segment thereby formed on each lateral margin of the strip, each of said segments defined by predetermined first lateral and longitudinal dimensions, said first lateral dimension extending from the lateral outermost extremities of each of the pair of slots to the associated lateral edge of the strip, said first longitudinal dimensions determined by the width of the slot in the longitudinal direction of the strip at the lateral outermost extremities of the slots, a second series including narrow elongated slot means, adapted to traverse the longitudinal axis, the laterally outermost extremities of each of the narrow elongated slot means in said second series being spaced from the associated lateral edge of the strip by a second strip segment having a second predetermined lateral dimension, which is greater than the first predetermined lateral dimension, wherein said preform strip is thereby configured to be stretched in the longitudinal direction to transform the first series of slot means into laterally aligned generally triangular container receiving and holding apertures.

4,301,919

MAIL RETURN KIT

Webster Morgan, 369 Highland Ave., Rochester, N.Y. 14620

Filed Nov. 23, 1977, Ser. No. 854,296

Int. Cl.[3] B65D *73/00*

U.S. Cl. 206—223 **10 Claims**

1. A kit for returning an article such as a wallet, through the mails, said kit comprising a card of a size which fits into said article, a mailing label, adhesive tape, said card having means for removably receiving the said mailing label to mount said mailing label on one side of card, said tape being mounted on the side of said card opposite from said one side, and said card containing indicia providing instructions for securing the arti-

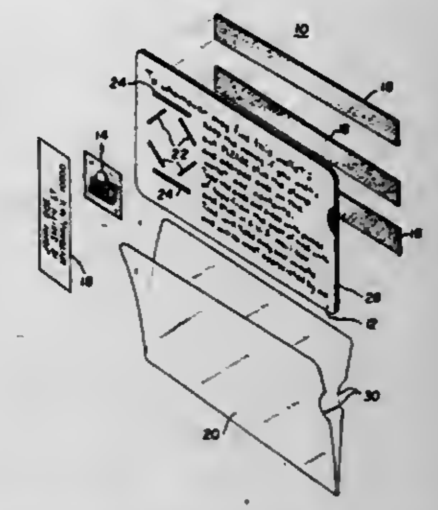

cle with said tape, attaching said label to said article and mailing said article.

4,301,920

GAME-FISH PRESERVING DEVICE

John N. Boggs, P.O. Box 1618, Panama City, Fla. 32401

Filed Feb. 11, 1980, Ser. No. 120,683

Int. Cl.[3] A63D *55/00;* **B65D** *85/00*

U.S. Cl. 206—315 R **4 Claims**

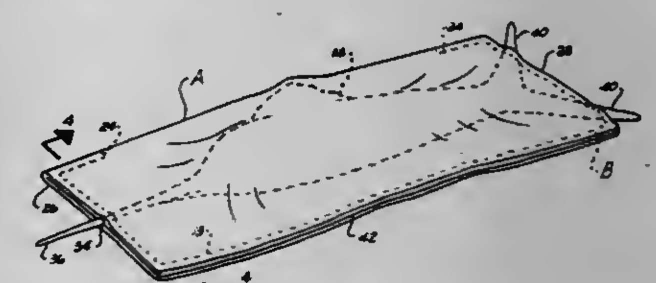

1. A game-fish preserving and protection device comprising: an elongated flexible sheathing having first and second ends; said sheathing including an insulating material;

said sheathing having a fold line to define first and second sides of said sheathing on respective opposing sides of said fold line;

Velcro hook fastener tape carried around the periphery of said first side and end of said sheathing;

Velcro loop fastener tape carried around the periphery of said second side and end of said sheathing;

said sheathing being foldable about said fold line for enclosing said game-fish with bill, fin, or tail portions extended from said sheathing enclosure; and

said Velcro fastening tape sealing the entire periphery of said folded sheathing and forming a tight seal about said extended portions of said game-fish;

whereby game-fish of varying length and sizes may be accommodated within said folded sheathing and insulated effectively therein.

4,301,921

SEPARATING REELED COILS

Andrew J. Petach, Oberlin, Pa., assignor to AMP Incorporated, Harrisburg, Pa.

Filed Mar. 6, 1981, Ser. No. 241,282

Int. Cl.[3] B65D *73/02*

U.S. Cl. 206—330 **3 Claims**

1. A rail for supporting a continuous carrier strip on which are provided a series of electronic packages, the combination comprising:

a metal carrier strip,

a series of electronic packages integrally formed along said carrier strip,

each side edge of said carrier strip interfitting with a removable rail having a hollow interior, a top wall, a bottom

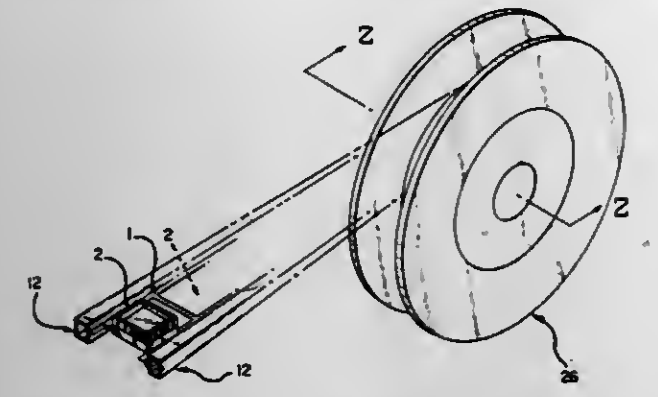

wall and sidewalls one of which is bifurcated with a continuous slot receiving a respective said side edge, and said top wall and said bottom wall supporting successive reeled coils of said carrier strip and separating said packages of said successive coils from one another.

4,301,922

PACKAGE WITH SURROUNDING BINDER

Benoit Hamelin, Schiltigheim, and Brigitte Constant, Selestat, both of France, assignors to Brasseries Kronenbourg, Cronenbourg, France

Filed Aug. 30, 1979, Ser. No. 70,928

Claims priority, application France, Sep. 1, 1978, 78 25707; Jan. 8, 1979, 79 00692

Int. Cl.³ B65D *65/00*

U.S. Cl. 206—428 15 Claims

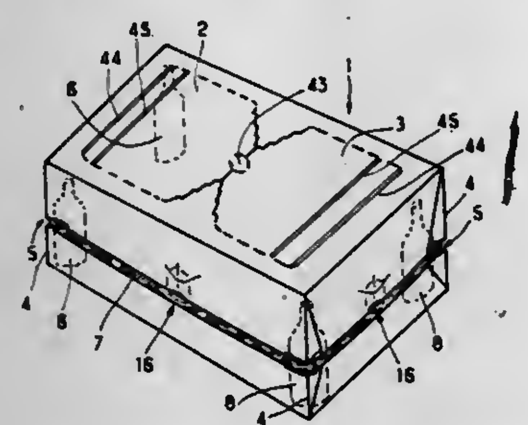

1. In a package for containers of generally cylindrical shape, the package being of generally parallelpiped shape and formed from a blank sheet of material, one surface of the package having non-destructive means of access to the interior of the package, the package having an encircling binder around its lateral surfaces, the binder lying on a plane perpendicular to the axes of the containers and passing through the center of gravity on the package when full, the binder being held in position by a deformable re-receiving structure adjacent at least one corner of the package, the improvement wherein said deformable receiving structure defines a binder receiving notch that includes a primary notch-forming portion and a supplementary notch-extending portion adjacent to and extending from said primary portion with said plane, said primary portion defining a first notch length with said binder defining a first package perimeter and said supplementary portion being deformable to move said primary portion to a displaced position and increase the length of the notch as said binder diminishes the package perimeter engaged by the binder to form a handle for carrying the package.

4,301,923

DISPOSABLE PORTION PACKAGE

Lasse T. J. Vuorento, Aleksanterinkatu 26 A, SF-33100 Tampere 10, Finland

Filed Aug. 28, 1979, Ser. No. 70,363

Claims priority, application Finland, Aug. 29, 1978, 782631; Feb. 27, 1979, 790644

Int. Cl.³ B65D *83/14*

U.S. Cl. 206—484 16 Claims

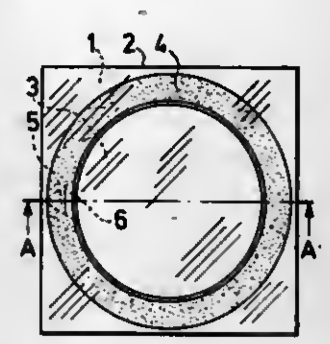

1. A disposable portion package for a usable product, said usable product being in the form of a liquid, cream, paste, powder or the like, said package comprising two wall means sealed to one another along an overlapping section to thereby define a closed casing in which said product is disposed, one of said wall means comprising an outer stiffening layer means and an inner film layer, a seal weakening material disposed between a portion of said outer stiffening layer means and an overlapping portion of said inner film layer with the remaining portion of said outer stiffening layer means and said inner film layer being overlappingly joined to another, said seal weakening material being overlappingly disposed relative to a portion of said overlapping section of said two wall means, said inner film layer being constructed and arranged such that when external pressure is applied to the package by the user for obtaining access to the usable product, the part of the inner film layer juxtaposed said seal weakening material ruptures and the product exits said package through said rupture in said inner film layer and through a conduit formed between said stiffening layer means and said inner film layer at the portion where said seal weakening material is disposed.

4,301,924

REFLECTOR UNIT FOR PHOTOFLASH ARRAY

Edward L. Latos, Mentor, and Elton G. Moneymaker, Moatville, both of Ohio, assignors to General Electric Company, Schenectady, N.Y.

Filed Jul. 5, 1979, Ser. No. 54,834

Int. Cl.³ B65D *21/02*

U.S. Cl. 206—520 4 Claims

1. A reflector unit for a photoflash array, comprising a sheet-like member shaped to provide a plurality of individual reflectors and a plurality of tapered radiation barriers respectively between adjacent individual reflectors, each of said radiation barriers comprising a pair of walls tapering to an apex at the front of the reflector unit, wherein the improvement comprises mutual inward deformation of the pair of walls of one or more radiation barriers in a region at the apex thereof thereby forming one or more ribs in the concavity and near the apex or one of more of said radiation barriers so as to permit nested stacking of a plurality of said reflector units and prevent adjacent reflector units from wedging together.

4,301,925

BAG WITH OPENING AND RECLOSING FEATURE

William M. Bogart, Bloomington, Minn., assignor to Bemis Company, Inc., Minneapolis, Minn.

Filed Dec. 28, 1979, Ser. No. 108,163

Int. Cl.³ B65D *33/30*

U.S. Cl. 206—616 21 Claims

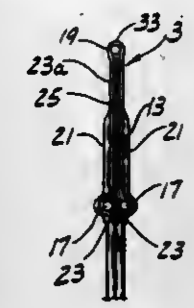

1. A bag having opposed walls and a top closure closing the mouth of the bag adapted to be opened for opening the bag at its mouth and for reclosing the bag, said top closure comprising closure strip means extending around the mouth of the bag from one wall of the bag to the other overlying and sealed to the outside of the walls, the ends of the closure strip means projecting outwardly beyond the sides of the bag and forming ears, a pair of closure elements carried by the strip means extending lengthwise thereof, each comprising a length of wire, and a tearing member carried by the strip means extending lengthwise thereof above the mouth edges of the walls and above the closure elements, the strip means, in condition as sealed to the walls, being of uniform width along its entire length and comprising two plies of material sealed together, the tearing member and the closure elements being between said plies, extending the entire length of the strip means, and having ends generally flush with the ends of the strip means, the bag being adapted to be opened by grasping the tearing member at an end thereof and pulling it to tear the closure strip means, the portions of the closure elements in the ears projecting outwardly beyond the sides of the bag being adapted to be bent to reclose the bag.

4,301,926

CONTAINER ASSEMBLY FOR LIQUIDS

Yun H. Chung, Rossford, Ohio, assignor to International Automated Machinery, Inc., Perrysburg, Ohio

Filed Apr. 27, 1979, Ser. No. 33,899

Int. Cl.³ B65D *17/28, 39/00*

U.S. Cl. 206—620 4 Claims

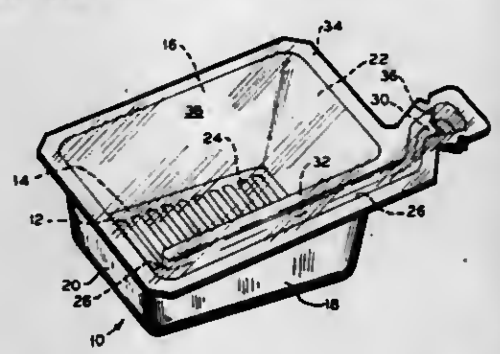

1. A liquid filled container assembly comprising:
- a formed sheet of plastic material having relatively flat portions defining an open main liquid containing cavity and a spaced apart adjacent elongate open conduit having one end communicating with the interior of the main cavity, the opposite outer end of the open conduit terminating in a drinking spout, the main cavity including a bottom wall having a relatively flat surface for supporting said container assembly in periods of non-use whereby the drinking spout terminates at a level above the highest point of the cavity;
- a sheet of relatively flat plastic material overlaying said formed sheet and being sealed to the flat portions thereof to hermetically seal the main cavity, the elongate conduit, and the spout; and
- weakening means proximate the spout of the conduit and spaced from the cavity for facilitating the tearing off of the portion of the sealed sheets defining the outer end of the conduit to expose the spout to allow liquid to be withdrawn from the main cavity and the conduit.

4,301,927

PACKING CONTAINERS WITH POURING SPOUT

Lars C. Carlsson, Blentarp, and Johan H. H. Selberg, Lund, both of Sweden, assignors to Tetra Pak International AB, Lund, Sweden

Filed Apr. 29, 1980, Ser. No. 144,861

Claims priority, application Sweden, May 8, 1979, 7904000; Sep. 18, 1979, 7907719

Int. Cl.³ B65D *5/74*

U.S. Cl. 206—622 18 Claims

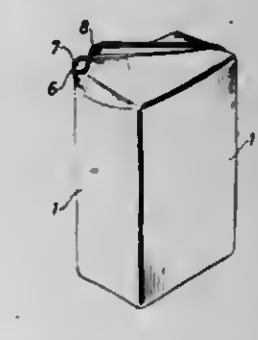

1. A packing container of the non-returnable type, comprising:
- a container body manufactured from a flexible laminated packing material;
- a pouring spout which is integrally connected to said container body, and which pouring spout includes a severable end;
- said pouring spout also including an emptying duct and a separate air duct, which ducts extend from the interior of said container body to said end of said pouring spout.

4,301,928

HEAT MONITORING AND TRANSFER ARRANGEMENT FOR SPONGE IRON PELLETS

Larry Coccia, Elizabeth, Pa., assignor to Pullman Incorporated, Chicago, Ill.

Filed Oct. 17, 1979, Ser. No. 85,554

Int. Cl.³ B07C *5/00*

U.S. Cl. 209—587 14 Claims

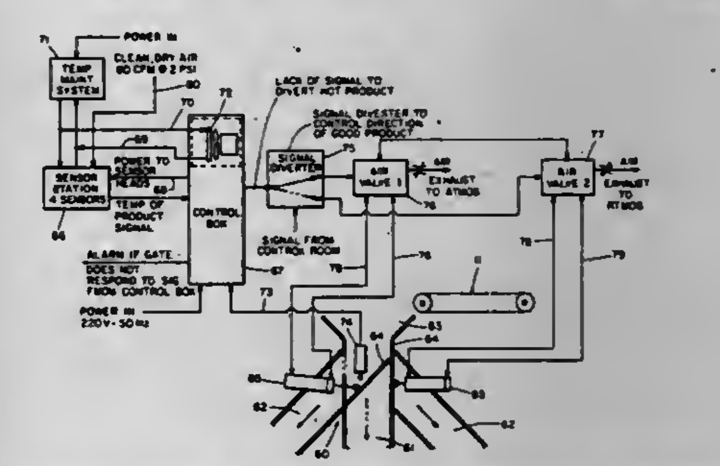

1. A heat monitoring and transfer arrangement particularly adapted for newly manufactured sponge iron pellets comprising:
- conveying means adapted to move said sponge iron pellets from a direct reduction reactor unit, where said pellets were heated during manufacture, to another plant unit,

an enclosure positioned in close proximity to said conveying means,

infra-red sensor means supported within said enclosure,

support means for supporting said sensor means within said enclosure including a horizontally disposed support element and sensor bracket means for mounting said sensor means, said bracket means being attached to and selectively positionable relative to said support element for selective angular positioning of said sensor means relative to said support element,

said support means further including vertically extending flange means mounted within said enclosure for supporting said support element, said support element being selectively positionable along said flange means whereby the vertical positioning of said sensor means within said enclosure may be selectively varied,

said sensor means being adapted to sense the temperature of said sponge iron pellets moving with said conveying means, and

means for segregating pellets above a predetermined temperature from the remaining pellets, said sensor means actuating said segregating means when detecting said pellets of a temperature higher than said predetermined temperature.

4,301,929

MULTIPLE-CAROUSEL MICROFICHE STORAGE AND RETRIEVAL SYSTEM

Timothy P. Fitzgerald, Los Angeles; Lubomir Novak, Marina del Rey, and Larry O. Engman, Redondo Beach, all of Calif., assignors to Image Systems, Inc., Culver City, Calif.

Filed Feb. 5, 1980, Ser. No. 118,687

Int. Cl.³ B07C *5/34*

U.S. Cl. 209—608 **16 Claims**

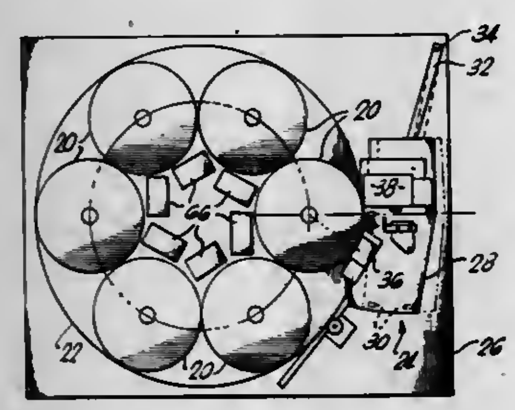

1. A multiple-carousel microfiche storage and retrieval system, comprising:

a turntable;

a plurality of storage carousels for holding a plurality of fiche, each of said carousels being rotatably mounted on said turntable;

retrieval station means, for retrieving a fiche from and replacing a fiche in one of said carousels;

means for rotating said turntable;

means for rotating each of said carousels and locating a selected fiche stored therein; and

control means for coordinating operation of said two means for rotating and said retrieval station means, to position a selected one of said carousels at said retrieval station means and to initiate retrieval and replacement operations by said retrieval station means.

4,301,930

DISK SCREEN, MODULAR DISK ASSEMBLY AND METHOD

William C. Smith, West Vancouver, Canada, assignor to Radar Companies, Inc., Portland, Oreg.

Filed Sep. 24, 1979, Ser. No. 78,190

Int. Cl.³ B07B *13/05*

U.S. Cl. 209—671 **14 Claims**

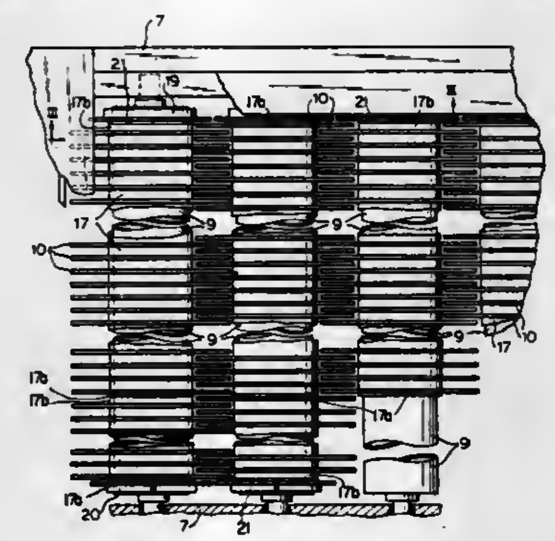

1. A disk screen apparatus comprising a screening bed having a series of corotating spaced parallel elongate shafts each of which has thereon a longitudinal series of concentric screen disks which interdigitate in axially spaced relation with the screen disks on the adjacent shafts, and comprising:

each of said shafts having a cylindrical perimeter and a similar length;

a plurality of tubular screen disk modules each of which comprises an elongate tubular hub sleeve substantially shorter than said shafts, but each sleeve having a complementary inside diameter throughout its length for slidable engagement on said shaft perimeters;

each shaft having thereon an assembly of a plurality of said modules with the hub sleeves releasably slidably engaged throughout their lengths concentrically in endwise abutment with each other on and about the shaft perimeter;

each of said hub sleeves carrying in fixed radially extending relation thereabout a plurality of said screen disks in substantially accurately uniformly axially spaced relation to one another throughout each assembly on each of said shafts;

means releasably clamping the hub sleeves of each assembly in endwise engagement with one another and in corotative relation on and with each shaft;

and means for axially orienting said hub sleeves on each shaft relative to the hub sleeves on each adjacent shaft for maintaining interdigitated spaced relation of the disks of each assembly with the disks of each adjacent assembly.

4,301,931

GRAIN SORTER

Toshihiko Satake, Higashihiroshima, Japan, assignor to Satake Engineering Co., Ltd., Tokyo, Japan

Filed Apr. 17, 1980, Ser. No. 141,160

Int. Cl.³ B07C *9/00*

U.S. Cl. 209—691 **4 Claims**

1. A grain sorter comprising:

a machine frame;

at least one grain sorting board having a coarse surface; and a device for moving the grain sorting board in swinging movement including a mounting mechanism comprising a pair of pivotal links connected to a lower end of the grain sorting board and another pair of pivotal links connected to a higher end thereof for mounting the grain sorting board for swinging movement on the machine frame in such a manner that the grain sorting board is inclined in one direction at a certain angle of inclination with respect to the horizontal, a swinging mechanism for moving the grain sorting board in swinging movement having a rotary shaft supported by the machine frame and including an eccentric portion for moving the grain sorting board in swinging movement at a swinging angle larger than the angle of inclination of the grain sorting board, and a mechanism for adjusting the angle of inclination of the grain

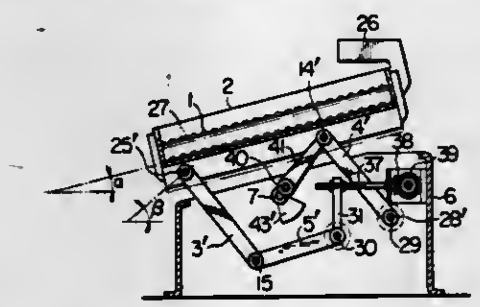

sorting board operatively connected to the mounting mechanism; wherein the improvement resides in that the mechanism for adjusting the angle of inclination of the grain sorting board is incorporated in the device for moving the grain sorting board in swinging movement within the limit set by the heights of said mounting mechanism and said swinging mechanism to enable the center of gravity of the grain sorting board to be disposed at a low level.

4,301,932

TRAIN AIR LINE FITTING ATTACHMENT FOR TYPE E COUPLERS

Russell G. Altherr, Munster, Ind., assignor to Amsted Industries Incorporated, Chicago, Ill.

Filed Oct. 24, 1979, Ser. No. 87,874

Int. Cl.³ B61G *5/06*

U.S. Cl. 213—76 ***9* Claims**

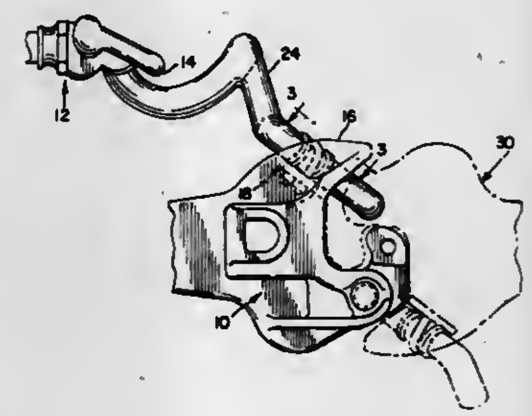

1. A bracket for use in mounting a train air line fitting to the underside of an E type railway coupler having a guard arm, said bracket comprising a plate-like member having front and rear faces, apertures in said plate-like member for receiving legs of a fastener of the U-bolt type, and a plurality of projecting surfaces on said front face spaced from and oriented relative to said aperture defining seat means for receiving a train air line fitting to be secured to said bracket by said fastener, means for fixedly securing said bracket to said guard arm in a position located totally below said guard arm.

4,301,933

SYNTHETIC RESIN THIN-WALLED BOTTLE

Yataro Yoshino, Tokyo, Japan, assignor to Yoshino Kogyosho Co., Ltd., Tokyo, Japan

Filed Dec. 7, 1979, Ser. No. 101,172

Claims priority, application Japan, Jan. 10, 1979, 54-2804[U]

Int. Cl.³ B65D *1/02*

U.S. Cl. 215—1 C **3 Claims**

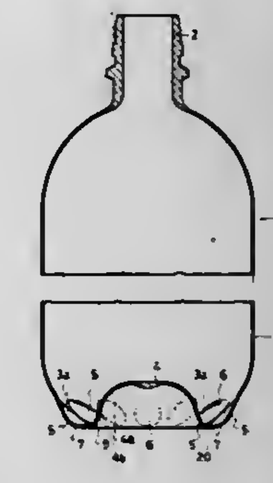

1. A synthetic resin thin-walled bottle having a neck portion, a biaxially oriented body wall portion extending downwardly from the neck portion and a bottom wall portion connected to the lower extremity of said body wall portion through a body wall section which extends downwardly and inwardly to said bottom wall portion, the bottom wall portion of said bottle having an upwardly projecting rise having a conical lower portion and an annular basal portion connected to said section and said rise through a substantially planar annular interconnect area, said section having spaced on the circumferential periphery thereof a plurality of rounded bulges projecting outwardly from said section, each of said bulges having an underside surface positioned more outwardly than said annular interconnect area, the underside surface of said bulges being annularly arranged and forming an outer ground-contacting surface for said bottle.

4,301,934

NURSING BOTTLE DEVICE FOR NURSING AN INFANT

Robert J. Forestal, 6127 Wexford Rd., Indianapolis, Ind. 46220

Filed Oct. 26, 1979, Ser. No. 88,548

Int. Cl.³ A61J *9/00*

U.S. Cl. 215—11 D **11 Claims**

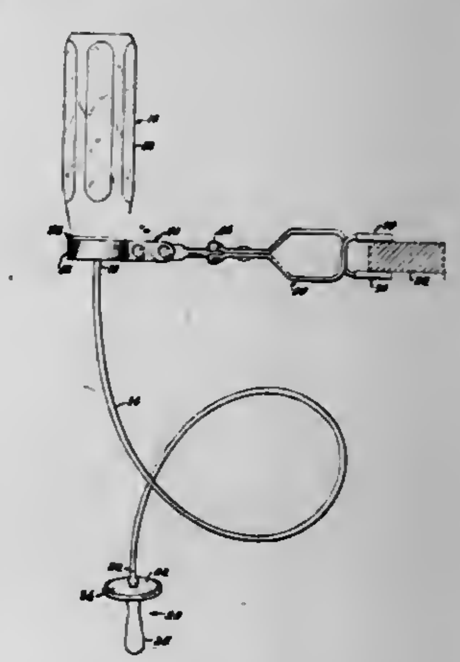

1. An infant's nursing bottle device for nursing an infant, which provides a remotely-supplied nipple device for feeding

an infant from an infant's nursing bottle, comprising, in combination:

a closure means for the nursing bottle;
an elongated and flexible connecting tube means;
a nipple means including a nipple;
first interconnection means which connects the tube means with the interior of the nipple means and provides communication of the interior of the tube means with the interior of the nipple means and of the nipple thereof;
second interconnection means, which includes the closure means for the nursing bottle and which connects the tube means with the nursing bottle and provides communication of the interior of the tube means with the interior of the nursing bottle;
bottle-support means being provided for supporting the nursing bottle in an inverted position and operatively remote from the location of the nipple means when the infant is nursing from the nipple of the nipple means;
in a combination in which valve means is provided which operatively seals the inlet of the second interconnection means, thereby blocking communication of the interior of the tube means with the interior of the nursing bottle and preventing passage of air from the bottle even through pressure in the tube means is less than in the bottle, when the milk supply in the nursing bottle has been exhausted.

4,301,935
CONTAINER WITH HANGER
Cem M. Gokcen, Waukegan, and Robert W. Gilbert, Libertyville, both of Ill., assignors to Baxter Travenol Laboratories, Inc., Deerfield, Ill.
Filed Jan. 10, 1980, Ser. No. 111,017
Int. Cl.³ B65D *23/10*
U.S. Cl. 215—100 A **10 Claims**

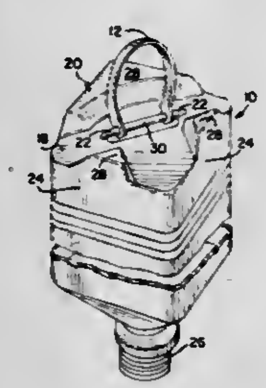

1. A suspendable container comprising a one-piece plastic body including an indented bottom wall portion, suspension means carried by said bottom wall for hanging said container in an inverted position, said suspension means comprising a support shaft means integral with said bottom wall said suspension means being disposed within said indented bottom wall portion so as not to interfere with the container resting on a flat surface, and a separate elongated hanger element carried by said shaft means, said hanger element having an essentially keyhole shaped aperture at each end, and said shaft means having at least a pair of enlarged end portions, each rotatably received within one of said aperture to provide a hanger loop to allow the container to be suspended in an inverted position, said apertures being slightly smaller than said shaft to frictionally engaging said shaft means to permit said hanger loop to be maintained securely within said indented bottom wall portion without the use of a restraining means engaging said hanger loop, and said hanger element angled to be closely adjacent said indented bottom wall portion when said hanger loop is not being used to invertedly hang said container.

4,301,936
CANNULA PIERCEABLE SELF-SEALING CLOSURE
Edward P. Percarpio, North Haledon, N.J., assignor to Becton, Dickinson and Company, Paramus, N.J.
Division of Ser. No. 942,113, Sep. 13, 1978, Pat. No. 4,226,333, which is a division of Ser. No. 880,474, Feb. 23, 1978, Pat. No. 4,136,794, which is a division of Ser. No. 729,643, Oct. 5, 1976, Pat. No. 4,111,326, which is a continuation-in-part of Ser. No. 663,921, Mar. 4, 1976, abandoned. This application May 8, 1980, Ser. No. 147,949
Int. Cl.³ B65D *39/04*
U.S. Cl. 215—247 **1 Claim**

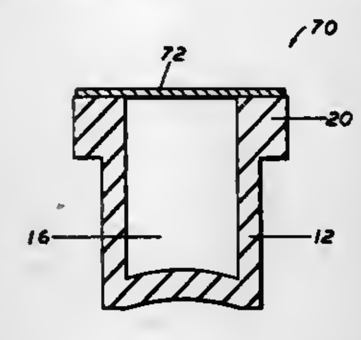

1. A cannula pierceable, self-sealing, gas proof closure for sealing an open end of an air evacuated blood collection tube, which comprises:

(a) a tubular elastomeric body having
(i) flexible, elastic sidewalls;
(ii) an open first end; and
(iii) a closed second end formed by a cannula pierceable, flexible, elastic end wall integral with said sidewalls;
(b) a flange disposed radially about the periphery of said sidewalls adjacent to said first end; and
(c) a removable sheet selected from either a pressure sensitive tape or a polymeric resin closing the open first end;
said end wall having a convex inner surface and a concave outer surface when pressure on inner and on outer surfaces is equal, said tubular body having a diameter which bears a ratio to the height of the body of about 0.8:1 and to thickness of the second end of from 5.4:1 to 12.1:1;
whereby when the closure is emplaced in and sealing an open end of an air evacuated tube, the higher pressure on the convex inner surface of the end wall as compared to the lower pressure (vacuum) exerting itself on the concave outer surface creates a pressure differential on the end wall, flexing and flattening the concave-convex configuration and creating a radial force directed toward the periphery of the end wall, said force effecting a restraining and sealing force between the closed second end of the elastomeric body and the air evacuated tube.

4,301,937
BLOW MOLDED PLASTIC BOTTLE AND PLASTIC CAP
Leo Von Hagel, North Massapequa, N.Y., assignor to Maxcap, Inc., New York, N.Y.
Continuation of Ser. No. 911,277, May 31, 1978, Pat. No. 4,177,906. This application Dec. 3, 1979, Ser. No. 99,415
The portion of the term of this patent subsequent to Dec. 11, 1996, has been disclaimed.
Int. Cl.³ B65D *55/02*
U.S. Cl. 215—252 **22 Claims**

13. A combination of a plastic cap and a blow molded plastic milk bottle having a neck, said neck having a mouth, an externally projecting ridge below said mouth and an inwardly directed portion at said mouth, the wall thickness of said neck being about 0.02–0.03 inch,

said plastic cap having a top wall and a downwardly directed circular plug for engaging, and forming an antileak seal with, said inwardly directed portion when said cap is forced downward onto said neck,
the top of said neck being adapted to engage the lower side of said top wall

said outwardly directed ridge of said neck being a bend in the wall of said neck and being adapted to be positioned above a corresponding inwardly directed ridge on said cap so as to retain said cap in its seal-forming position on said neck,
said inwardly directed portion having an inner surface and an outer surface, said inner and outer surfaces each extending upwardly and inwardly in frusto-conical form

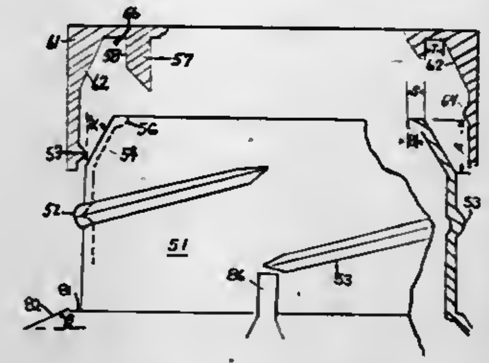

above said outwardly directed projection at an angle of about 30° to 70° to the horizontal, said frusto-conical form extending substantially to the top of said neck,
said plug having a circular outer surface for engaging said mouth, said outer surface being tapered to increase in diameter upwardly and to exert an outward force on said mouth and a corresponding inward force on said surface when said cap is forced downward onto said neck.

4,301,938
SAFETY PRESSURE RELIEF DEVICE
Loren E. Wood; Jerome D. Allen, both of Tulsa; Miner E. Clift, Broken Arrow; Jerry W. Kays, Tulsa, and Calvin C. Forsythe, Tulsa, all of Okla., assignors to BS&B Safety Systems, Inc., Tulsa, Okla.
Division of Ser. No. 936,868, Aug. 25, 1978. This application Oct. 9, 1979, Ser. No. 82,685
Int. Cl.³ F16K *13/04*
U.S. Cl. 220—89 A **12 Claims**

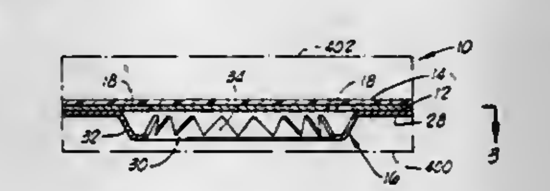

1. A safety pressure relief device, comprising:

a rupture disk having a blowout portion constructed for dislocation from said rupture disk;
a flexible sealing member located on one side of said rupture disk; and
a knife means located on the other side of said rupture disk having an opening disposed therein orientated so that said blowout portion is moved therethrough upon rupture of said rupture disk and having a cutting blade located on the periphery of said opening so that when said rupture disk ruptures in response to a predetermined pressure differential and said blowout portion thereof moves through said opening in said knife means said flexible sealing member engages said knife means and is severed thereby.

4,301,939
RECLOSABLE PACKING CONTAINER
Herwig Pupp, Lund, Sweden, assignor to Tetra Pak International AB, Lund, Sweden
Filed Oct. 30, 1979, Ser. No. 89,475
Claims priority, application Sweden, Nov. 6, 1978, 7811432
Int. Cl.³ B65D *17/30*
U.S. Cl. 220—267 **8 Claims**

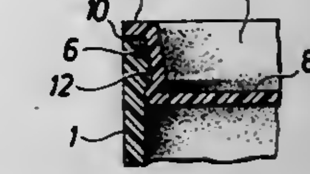

1. A reclosable container, comprising:

a container body having a bottom, a top, and an inner surface with an upper portion;
a base connected to the bottom of the body;
a lid which is secured to the top of the body, a portion of which lid engages the upper portion of the inner surface of the body to form a tight fit;
a severable portion of the container body located above the upper portion of the inner surface of the container body, which severable portion, when severed, defines an opening of the container;
a tear thread arranged within an inner layer of the severable portion of the container body, adjacent the inner surface of the container body; and
said lid being secured to the top of the body by a liquid tight bond.

4,301,940
EASY OPEN CAN END CONSTRUCTION
Daniel S. Cvacho, 241 Kirkley Cir., Forest, Va. 24551
Filed Jul. 25, 1980, Ser. No. 172,177
Int. Cl.³ B65D *17/34*
U.S. Cl. 220—269 **20 Claims**

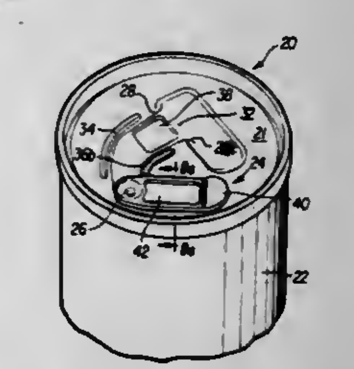

1. An easy open can end construction for metallic beverage cans which comprises:

a. a can end having a substantially flat central panel,
b. a pair of generally parallel score lines defining a tear strip in said flat central panel with said score lines being closed at one end and open at the opposite end,
c. a pull tab secured to said flat central panel within said pair of score lines adjacent the closed end thereof,
(1) said pull tab having a substantially flat body portion whose width is at least ten times its height,
(2) said pull tab having its longitudinal axis positioned at substantially right angles to the longitudinal axis of said parallel score lines,
(3) first orienting means on pull tab for maintaining the position of said pull tab with respect to said parallel score lines prior to opening the can end,
(4) second orienting means on said can end cooperating with said first orienting means on said pull tab for maintaining the position of said pull tab with respect to said parallel score lines,
d. said can end adapted to be opened by pivotal movement of

said pull tab in a direction substantially at right angles to said score lines and then twisting for a given number of half turns in the direction of the score lines whereby said pull tab becomes interlocked with said tear strip and lies closely adjacent the central panel so as not to interfere with the nose of the user should the user drink directly from the can.

4,301,941
CONTAINER CLOSURE
Donald L. Kraft, Kansas City, Mo., assignor to Phillips Petroleum Company, Bartlesville, Okla.
Continuation of Ser. No. 894,286, Apr. 7, 1978, abandoned. This application Aug. 6, 1979, Ser. No. 64,164
Int. Cl.³ B65D *41/16*
U.S. Cl. 220—306 6 Claims

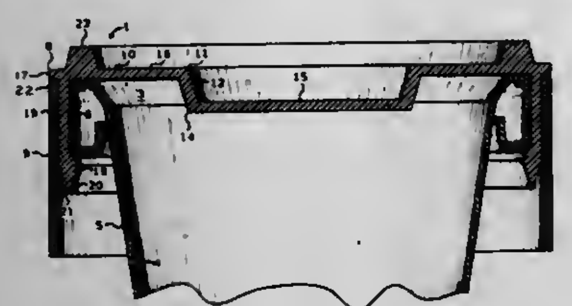

1. A container closure comprising: a top member having a top forming portion and a generally tubular skirt integral with and depending from said top forming portion, said skirt having an interior surface, an exterior surface and a bottom edge, the exterior surface of the skirt having an upper portion and a lower portion with the upper portion of the exterior surface of the skirt having a generally annular flange integral with and projecting generally radially outward from the upper portion, and the lower portion of the exterior surface of the skirt tapering generally inwardly and downwardly to the bottom edge of the skirt to form a ring lead in, the interior surface of the skirt tapering inwardly and upwardly from the bottom edge of the skirt forming a lead in for installation of said top member on a container and extending to a locking rib projecting generally radially inward from the interior surface of the skirt; and

a generally tubular ring having opposite open ends and an interior surface and an exterior surface, with one end of said ring abutting said annular flange and a portion of the interior surface of the ring in engagement with the upper portion of the exterior surface of the skirt said generally tubular ring being made as a part separate from said top member.

4,301,942
INSULATED CONTAINER
Sam Kupperman, Chicago, and Dennis Kupperman, Glenview, both of Ill., assignors to RB Products Corporation, Skokie, Ill.
Continuation of Ser. No. 905,639, May 15, 1978, abandoned. This application Jul. 20, 1979, Ser. No. 59,487
Int. Cl.³ A47G *19/22*; B65D *8/06*
U.S. Cl. 220—444 23 Claims

1. A multiple compartment thermally insulated beverage container having opposed wall surfaces with insulating means therebetween, said container including longitudinally extending partition means inside said container defining multiple compartments separate one from the other along substantially the entire portion thereof, said partition means comprising two opposing imperforate wall surfaces with insulating means therebetween, said imperforate wall surfaces being spaced from and interconnected to each other about the periphery thereof, stop means for causing the bottom periphery of said imperforate wall surfaces to be spaced above the bottom of the container thereby providing communication between compartments and top means enclosing at least one of said compartments while allowing another compartment to remain substantially opened at the top thereof, said top means comprising a closure pivotally connected to the upper part of said partition means between the opposing imperforate wall surfaces.

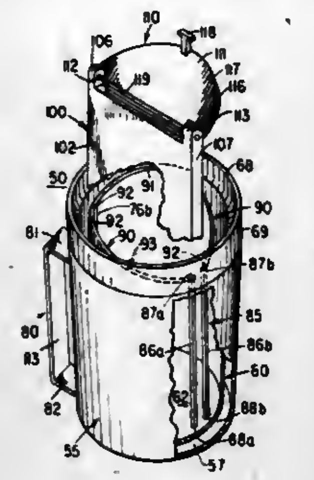

4,301,943
MELAMINE CONTAINER AND PROCESS FOR UNLOADING SAME
Willem J. Barends, Limbricht, and Alexis J. W. van Mulken, Brunssum, both of Netherlands, assignors to Stamicarbon, B.V., Geleen, Netherlands
Filed May 17, 1979, Ser. No. 40,151
Claims priority, application Netherlands, Dec. 30, 1978, 7812680
Int. Cl.³ B67B *7/00*; A01C *15/04*
U.S. Cl. 222—1 16 Claims

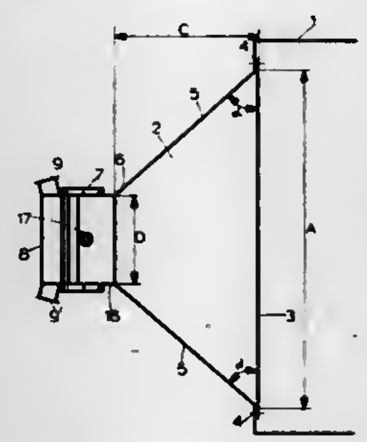

1. A process for unloading melamine powder from a bulk container provided with a rear wall having an openable discharge aperture in that rear wall said process comprising the steps of attaching a discharge chute to the rear wall of the container in alignment with the discharge aperture, opening the discharge aperture, tilting the bulk container to induce flow of melamine powder within the container and from the discharge aperture, and maintaining the flow of melamine powder through the discharge aperture and through the discharge chute toward a predetermined discharge point with the flow of melamine powder being maintained because of the angled relationship of the walls of the discharge chute with respect to the plane defined by the front face of the discharge chute wherein the angle between the top and bottom walls and the front face range from about 70° to about 90° and where the angle between the side walls and the front face range from about 40° to about 55° and wherein the container is tilted at an angle ranging from about 35° to about 45°.

4,301,944
SPREADER DEVICES HAVING A CONTROLLED OUTPUT
Maurice C. J. Lestradet, 291, av. du Marechal de Lattre de Tassigny, 51230 Fere Champenoise, France
Filed Apr. 11, 1979, Ser. No. 28,431
Claims priority, application France, Dec. 28, 1978, 78 36666
Int. Cl.³ A01C *15/00*; B05B *9/06*
U.S. Cl. 222—55 22 Claims

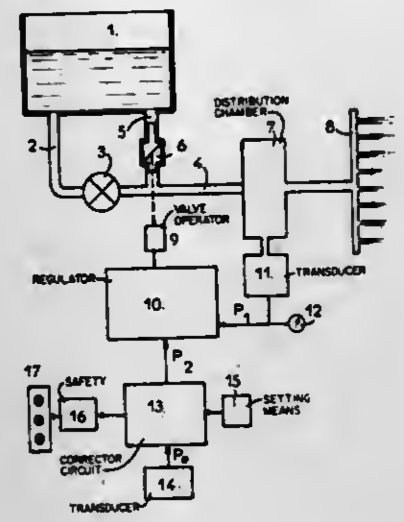

1. A spreader device for mounting on a vehicle mounted on wheels so that the output of the spreader device is controlled by the speed of displacement of the vehicle, said device comprising a tank for containing a liquid product to be spread, a pump having an output and an input which is connected to the tank, a spreader system for said liquid product, a supply pipe connecting the output of the pump to the spreader system, a return pipe connecting the tank to the supply pipe, a regulating valve inserted in the return pipe, first transducer means to sense the pressure in said supply pipe and to produce a first fluidic signal proportional to said pressure; second transducer means to sense the displacement speed of said vehicle and to produce a second fluidic signal which is linearly proportional to said displacement speed; corrector fluid circuit means comprising an input connected to said second transducer means to receive said second fluidic signal, an output, a first passageway putting the input in communication with the output, a fluid discharge passageway connected to said first passageway, an adjustable throttle, valve means inserted in said discharge passageway, and setting means for adjusting said throttle valve means whereby to produce at said output a third fluidic signal which is also linearly proportional to said displacement speed but of a selected different slope from said second signal; regulator means adapted to compare said first and said third fluidic signals and to adjust the position of said regulating valve through a valve operator as a function of the difference between said fluidic signals, said third fluidic signal from said corrector fluid circuit means varying in accordance with a slope corresponding to any selected one of a family of linear curves approximating supply pipe pressure plotted as a function of displacement speed of said vehicle at pressures in excess of 1 bar and displacement speeds of said vehicle greater than 4 kph.

4,301,945
TOOTHPASTE DISPENSER
Eugene Dworkin, 16-66 Bell Blvd., Bayside, N.Y. 11360
Filed Mar. 24, 1980, Ser. No. 133,639
Int. Cl.³ B65D *35/34*
U.S. Cl. 222—100 12 Claims

1. A light-weight, self-supporting, portable dispensing device for manually emptying the paste contents from collapsible tubes, comprising:

(a) stand means for supporting an elongated, paste-containing collapsible tube above a support surface, said stand means having resilient mouth-forming wall portions spaced apart of each other to resiliently bear against opposite sides of the tube and bounding longitudinally-extending mouth through which the tube passes lengthwise from its closed end towards its opposite dispensing end,

said stand means also having resilient cavity-forming wall portions spaced apart of each other and extending away from the mouth-forming wall portions to bound a cavity which communicates with said mouth,

said stand means further having resilient extension wall portions extending away from said cavity-forming wall portions;

(b) manually-operated means located in said cavity for holding the closed end of the tube, and being turnable about a longitudinally-extending turning axis for successively drawing the tube lengthwise through said mouth and thereupon into said cavity, and for concomitantly successively coiling the drawn-in tube portions about said turning axis to form a coiled tubular portion in said cavity; and

(c) retainer means mounted on the stand means and extending below the manually-operated means and the coiled tubular portion for retaining both the former and the latter in said cavity,

said retainer means and said cavity-forming wall portions being resiliently yieldable to permit said cavity to increase in volume to accommodate an increase in volume of the coiled tubular portion due to further coiling,

said resiliently yieldable retainer means and said resilient cavity-forming wall portions all constantly resiliently bearing at different contact zones on the coiled tubular portion, said contact zones being spaced apart of each other circumferentially about said turning axis and sequentially, as considered in lengthwise direction of the tube, for successively emptying the paste contents from the coiled tubular portion,

said retainer means being mounted on said extension wall portions for sliding movement relative thereto.

4,301,946
APPARATUS FOR PLACING A DEVICE TO BE ENERGIZED IN A CIRCUIT INCLUDING A BATTERY WITHOUT NEED FOR WIRING
Gerald Goldin, 138 S. Parkview Ave., Columbus, Ohio 43209, and William L. Brooks, Jr., Dallas, Tex., assignors to Gerald Goldin, Columbus, Ohio
Filed Oct. 9, 1979, Ser. No. 82,668
Int. Cl.³ B67D *5/66*
U.S. Cl. 222—113 24 Claims

1. Apparatus for applying a battery in connection with an energizable device comprising insulating means, said insulating means providing a face for contact with or by the battery, strips of conductive material connected to said insulating means to provide thereon at least three continuous strip arrangements, said strip arrangements being separated from one another and including free end portions two of which provide

means for contact respectively with the terminals of the applied battery, and another two of which provide means for placing the device to be energized in a circuit including the battery, said strip arrangements further providing portions

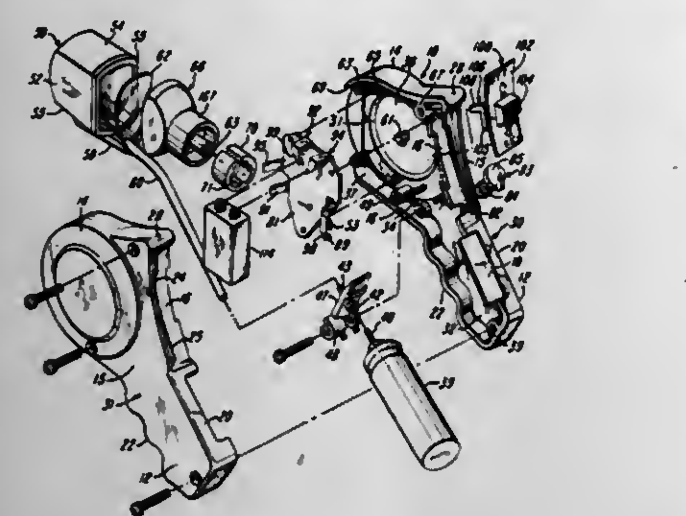

thereof which are normally biased one from the other with one arranged to be brought into contact with the other to complete a circuit enabling the energization of said device the power source of which is the applied battery.

4,301,947

QUICK AND ACCURATE AIMING DEVICE FOR AEROSOL DISPENSER

Glenn J. Potter, 1332 S. Hope St., Los Angeles, Calif. 90015

Continuation-in-part of Ser. No. 917,934, Jun. 22, 1978. This application Mar. 31, 1980, Ser. No. 120,697

Int. Cl.³ B67D *5/06*

U.S. Cl. 222—182 **6 Claims**

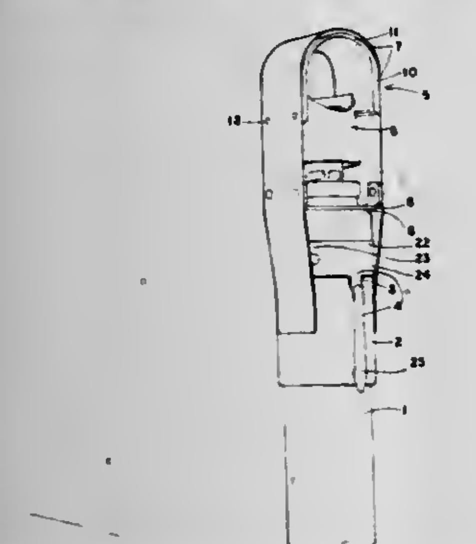

1. I claim an attachment to be put on aerosol dispenser canisters of the type having a shoulder, a discharge button with a sloping top, and a crimped ferrule in between forming a neck, particularly those spraying tear gas such as Mace, comprising:

a. an encircling band acting as the attachment proper, gripping such canister;

b. a retaining ring of a size to slip over the discharge button and crimped ferrule but holding back advance of said canister by not passing its shoulder; and

c. an arch at the sides of and above said discharge button forming, with the sloping top of said button, a tunnel accommodating the distal phalanx of a triggering digit, thus providing accurate aiming means without the user's having to take his eyes off the assailant, and thus also protecting by its broadness against accidental rotation or depression of said discharge button; all three elements joined together in a rigid unit.

4,301,948

DISPENSER FOR PASTE-LIKE PRODUCTS WITH A MANUALLY ACTUATABLE PISTON

Joachim Czech, Jahnstrasse 19, D-8405 Donaustauf, Fed. Rep. of Germany, and Hans D. Sieghart, Moosburg, Fed. Rep. of Germany, assignors to Joachim Czech, Donaustauf, Fed. Rep. of Germany

Filed Dec. 12, 1979, Ser. No. 102,893

Claims priority, application Fed. Rep. of Germany, Jan. 17, 1979, 2901717

Int. Cl.³ B67D *5/40*

U.S. Cl. 222—341 **4 Claims**

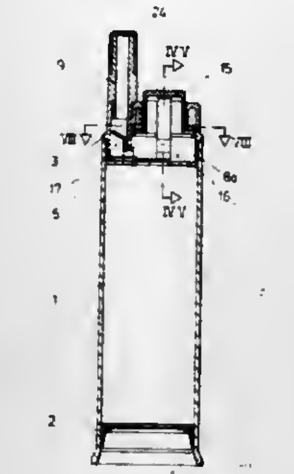

1. A dispenser for paste-like products comprising a container having opposite ends which are spaced apart in a longitudinal direction and one of which is substantially closed by a wall wherein there is a hole, a head member on said one end of the container having a portion that is manually inwardly displaceable against a bias, said head member cooperating with said wall to define a pump chamber into which product can flow from the container through said hole and which has an outlet spaced from said hole, a slidable piston sealingly engaging the inner surface of the container to close its other end, and a pair of check valve elements, one arranged to prevent flow of product through said hole from the pump chamber into the container and the other arranged to prevent inward flow through said outlet towards the pump chamber, said dispenser being characterized by:

A. said outlet being defined by a portion of said head member that is formed as a duct which is in laterally spaced relation to said hole and extends away from said wall in said longitudinal direction; and

B. said dispenser further comprising an insert member of resilient material confined in said head member and having

(1) a first flap portion which provides said one check valve element and which normally flatwise overlies said wall to close said hole therein but is flatwise flexible away from said wall,

(2) a second flap portion providing said other check valve element, said second flap portion being spaced from said wall and normally extending across said duct to prevent inward flow therethrough but being resiliently flatwise flexible away from said wall, and

(3) a medial portion to which said flap portions have flexing connections for flatwise movement, said connections being substantially parallel to one another, spaced apart in said longitudinal direction, and substantially contained in a plane that extends in said longitudinal direction, and said medial portion being formed to define a channel between said connections which extends transversely through said plane and through which product flows in passing from said hole to the space between said wall and said second-flap portion.

4,301,949

DEODORANT DISPENSING DEVICE

Richard C. Palson, Medfield, and John C. Armstrong, Milton, both of Mass., assignors to The Pharmasol Corporation, Randolph, Mass.

Filed Sep. 7, 1979, Ser. No. 73,233

Int. Cl.³ A61L *9/04*

U.S. Cl. 222—548 **9 Claims**

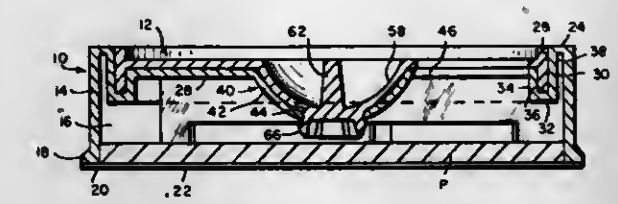

1. A deodorant dispensing device comprising in combination a receptacle for receiving a pad saturated with deodorant material, means at the top of the receptacle defining a plurality of openings disposed about a common center, a closure positioned at the top of the receptacle in mating engagement therewith and containing a plurality of corresponding located openings, mutually interengageable snap-on means at the interfaces of the closure and top for assembly of the closure to the top and rotatably retaining the closure in operative position, said mutually interengageable means including a downwardly extending bearing component in both said top and said closure, said downwardly extending bearing component comprising a hemispherical bearing surface concentric with the center of said top and a mating hemispherical bearing surface on the underside of said closure concentric with the center thereof, and means including a diametrically disposed nub in said bearing component for said closure for rotating said closure relative to said top.

4,301,950

ROTATABLE CLOSURE FOR COLLAPSIBLE TUBES

Horst Funfstuck, 364 W. Payson St., Glendora, Calif. 91740

Filed May 15, 1980, Ser. No. 150,007

Int. Cl.³ B65D *47/26*

U.S. Cl. 222—548 **1 Claim**

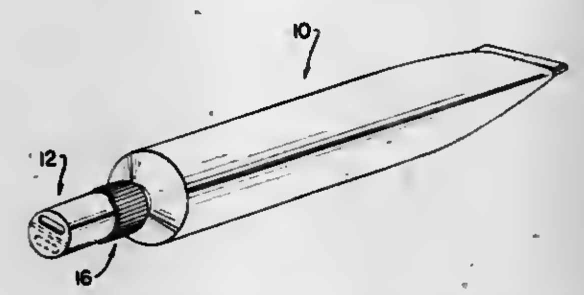

1. An improved adjustable dispensing cap for a collapsible tube and like containers, comprising:

a cap-base member, defining the discharge end of said collapsible tube, having a longitudinal discharge passage formed therein, including an end wall having a first discharge aperture disposed therein;

a rotatable valve-body member, mounted to said cap-base member, having a second discharge aperture formed in the end wall thereof, so as to be arranged in an open position in alignment with said first discharge aperture, to allow discharge of a material from said tube;

a sealing means interposed between said cap-base member and said valve-body member, said sealing means comprising a lateral rib member formed on the outer surface of said end wall of said cap-base member, and adapted to be received in a corresponding groove located on the inner surface of said end wall of said valve body, said rib member and said groove being centrally positioned to mate with each other whenever said cap-base is in a fully closed or fully opened position;

means, for rotatably securing said valve body to said cap-base member, comprising an annular rib formed on said valve body and adapted to be received in an annular matching groove formed in said cap-base member; and

means, for limiting the rotation of said valve body with respect to said cap-base member, wherein said limiting means comprises a projecting tab member formed on one end of said valve body, and a pair of spaced shoulders formed in said cap-base member, whereby said tab member engages said shoulders to establish a predetermined rotation of said valve body.

4,301,951

LUGGAGE CARRIER FOR ATTACHMENT OVER THE FRONT WHEEL OF A BICYCLE OR THE LIKE

Oskar Pletscher, Marthalen, Switzerland, assignor to Gebrüder Pletscher, Marthalen, Switzerland

Filed Oct. 9, 1979, Ser. No. 82,775

Claims priority, application Switzerland, Oct. 17, 1978, 10723/78

Int. Cl.³ B62J *9/00*

U.S. Cl. 224—32 R **3 Claims**

1. A luggage carrier, comprising:

a carrier frame;

an attachment means for securing the luggage carrier over a front wheel of a bicycle having a steering fork;

said steering fork including a fork head with two shoulders and two fork legs secured at their upper ends to a respective one of said shoulders;

said attachment means including two cap members integrally connected to said carrier frame, each of said cap members having a top wall and side walls;

each cap member being intended to engage over and about a respective shoulder of said fork head;

clamping means, associated with each of said cap members, for fixedly clamping the associated cap member at the related shoulder of said fork head;

said clamping means including a clamping wedge having a narrow upper and a broad lower end;

each cap member possessing at its side walls an inner concave contact surface engaging about the related shoulder at a surface thereof;

said inner concave contact surface being located forwardly in the direction of travel of the bicycle;

each cap member further possessing at its opposite side an inclined guide surface for said clamping wedge;

said guide surface diverging downwardly away from the related fork leg;

each of said clamping wedges including a threaded bore extended downwardly from the narrow upper end thereof; and

said clamping means including bolt means for extending through the top wall of the respective cap member and being screwed into the threaded bore of the respective clamping wedge for displaceably shifting said wedge into its clamping position.

4,301,952

ARTICLE CARRYING BAG FOR BICYCLES AND THE LIKE

Robert M. McNeill, Sunnyvale, Calif., assignor to McNeill-Favia Company, Mountain View, Calif.

Filed May 12, 1980, Ser. No. 148,693

Int. Cl.³ B62J *9/00*

U.S. Cl. 224—32 A **9 Claims**

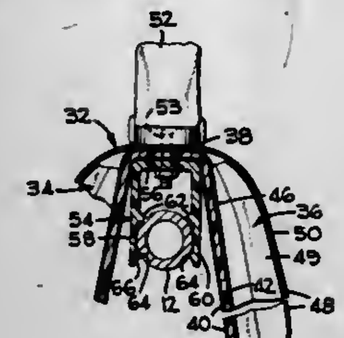

1. An article carrier for a bicycle or like vehicle having a wheel and a frame supporting the wheel for rotation in a generally vertical plane comprising a rigid elongate member, mounting means for mounting said elongate member on said frame above said wheel within said plane, an article container having an elongate central web and means for defining first and second article compartments on opposite sides of said web, said compartment defining means depending from opposite sides of said web to afford disposition of said compartments in flanking relation to said elongate member and said wheel, and attaching means fastened to the underside of said web for removably attaching said web to said elongate member, said attaching means including first and second flanges depending from the underside of said web in spaced apart relation, said flanges having respective inner surfaces that confront one another to define a slot having a width corresponding to the outer dimension of said elongate member, said flanges having converging edge surfaces remote from said web and being elastically deformable so as to resiliently engage said elongate member and being yieldable to afford selective disengagement from said elongate member.

4,301,953

TRAILER HITCH CYCLE RACK

Frederick H. Abbott, Main St., East Princeton, Mass. 01517

Filed Oct. 15, 1979, Ser. No. 84,606

Int. Cl.³ B60R *9/10*

U.S. Cl. 224—42.03 B **3 Claims**

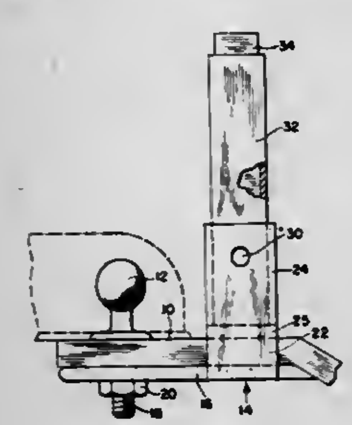

1. In combination with a trailer hitch including a plate and a removable ball on the plate, the plate being in fixed relation to the vehicle for securing a power vehicle with respect to a trailer, that improvement which includes a support for a cycle rack located on said trailer hitch plate and leaving the trailer hitch ball free on impediments so it can be used in the normal way,

said improvement comprising means forming a socket, means to connect and support the same in fixed position on the plate of the trailer hitch, said socket being speced from the ball,

a cycle rack, a depending column supporting said cycle rack, and means for securing said column at the lower end thereof with respect to said socket in upright condition of said column,

an opening through the socket, the plate being received in the opening, including means detachably connecting the ball to the plate.

4,301,954

SPARE TIRE CARRIER

Stanley E. Briggs, 200 Circle Dr., Beloit, Kans. 67420

Filed Sep. 5, 1979, Ser. No. 72,586

Int. Cl.³ B62D *43/00*

U.S. Cl. 224—42.23 **4 Claims**

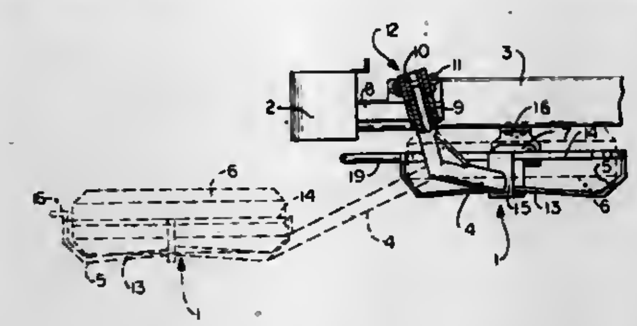

1. A spare tire carrier for use on a truck having laterally spaced frame members, said carrier comprising:

(a) a swing arm;

(b) a pivot hinge mounted on said swing arm and adapted for securing to one of said frame members in a location to permit said swing arm to pivot from a stowed position beneath the rear of said truck to an exposed position extending rearwardly of said truck;

(c) said pivot hinge having a pivot axis tilted rearwardly from vertical at the top thereof and thereby biasing said swing arm for movement downwardly and rearwardly from said stowed position to said exposed position;

(d) latching means for selectively holding said swing arm in said stowed position, and;

(e) holding means on said swing arm for securing a spare tire thereto such that said spare tire will pass from a stowed position to an exposed position with said swing arm; and wherein:

(f) said holding means is attached to said swing arm at an end opposite said pivot hinge and includes a basket; said basket comprising a circumferential ring adapted for encircling the spare tire to be stowed and a plurality of straps; each of said straps being securely attached at one end thereof to a generally common location on said swing arm and radially extending outwardly from said common location to said ring; each of said straps being of a shape to conform to a sidewall of the spare tire positioned horizontally within said basket; said basket securely holding the spare tire until the spare tire is manually removed therefrom.

4,301,955

MODULAR PLATFORM AND CAMERA SUPPORT MOUNTING FOR RACING VEHICLE

Gene C. DeFever, 30-53 49th St., Astoria, N.Y. 11103

Filed Dec. 28, 1979, Ser. No. 108,026

Int. Cl.³ G03B *17/56;* **B60R** *11/04*

U.S. Cl. 224—273 **10 Claims**

1. A modular platform and camera support mounting for racing vehicles comprising:

a modular support comprising a plurality of interconnected straight and curved tubular members and attached to, and supported by, the racing vehicle;

at least one camera support platform supported by said modular support; and

at least one camera support mounted on a respective camera support platform and on which a camera is mounted, wherein said camera support comprises: a base plate mounted on a respective camera support platform; an upper base plate movably mounted on said base plate, said upper base plate being movable with respect to a plane parallel to a plane in which said base plane lies; a camera plate movably mounted on said upper base plate and on which said camera is mounted, said camera plate being movable with respect to a plane in which said upper base

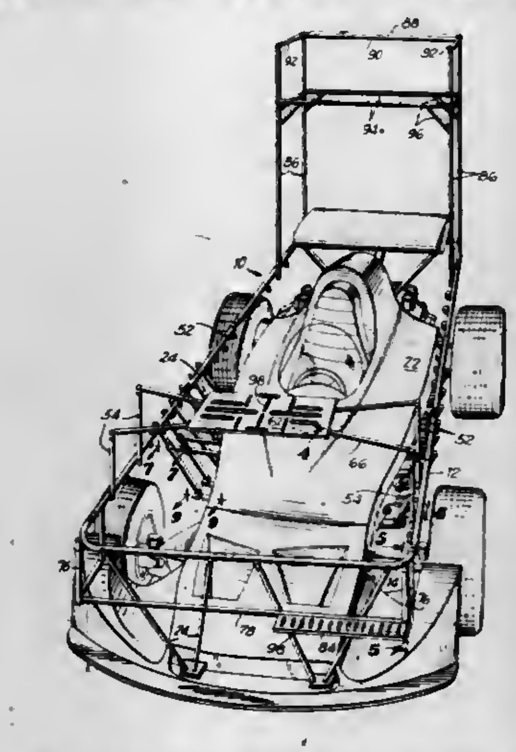

plate lies; lower supports mounted on said base plate; upper supports movably mounted with respect to a respective lower support; means for locking the position of an upper support with respect to said respective lower support; supports movably mounted on said upper base plate, stubs on a first end of said camera plate being movable within guides on said supports and a second end of said camera plate being movably mounted on a front end of said upper base plate; and, retaining means attached to said camera plate to align a camera on said camera plate;

wherein said upper base plate may be tilted from side to side, and said camera plate may be angled upwardly and downwardly.

4,301,956

RETRACTABLE BICYCLE CARRIER FOR VEHICLES

Griffith L. Hoerner, 2211 Montana Ave., Santa Monica, Calif. 90403

Continuation-in-part of Ser. No. 844,367, Oct. 21, 1977, Pat. No. 4,182,468. This application Jul. 31, 1979, Ser. No. 62,302

The portion of the term of this patent subsequent to Jan. 8, 1997, has been disclaimed.

Int. Cl.³ B60R *5/04, 9/10*

U.S. Cl. 224—311 **26 Claims**

1. For use with a vehicle closure, a bicycle carrier comprising a pair of carrier assemblies mountable on the inner surface of said vehicle closure a spaced distance apart adjacent to an edge of said closure distal from its hinge axis, each said carrier assembly comprising:

a bracket comprising

a housing defining, together with said closure when mounted thereon, a longitudinal bore, and

mounting means attached to said housing for mounting said housing to said closure; and

a bicycle-supporting member carried partially within said bore for movement therealong from a stowed position against said inner surface of said closure to an extended position for carrying bicycles thereon rearwardly of said closure, said bicycle-supporting member integrally comprising

(a) a leg section slidably receivable by said bore for extendable/retractable movement along said bore from, and to, said stowed position, respectively, and for rotational movement of at least about 90 degrees about its longitudinal axis when said bicycle-supporting member is in said extended position,

(b) a bicycle-supporting arm extending from a first end of said leg section and disposed at an angle relative thereto

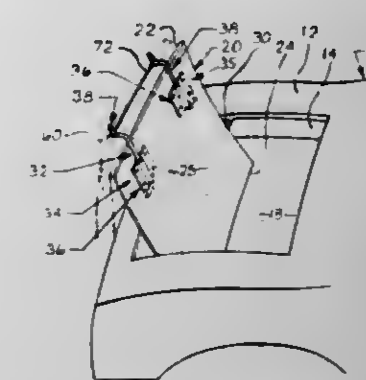

to provide, when said bicycle-supporting member is at its said extended position and said leg section has been rotated about 90 degrees about its said longitudinal axis from said stowed position, a substantially horizontal platform for suspending bicycles therefrom, and

(c) a keeper extending from said bicycle-supporting arm distal from said leg section at an angle sufficient to retain said bicycles on said bicycle-supporting arm;

said leg section being partially housed within said bore when said bicycle-supporting member is in both said stowed position and said extended position.

4,301,957

RIBBON CARTRIDGE

Sydney Shore, 38-40 48th St., Long Island City, N.Y. 11004

Filed Aug. 11, 1980, Ser. No. 176,744

Int. Cl.³ B65H *17/42*

U.S. Cl. 226—118 **5 Claims**

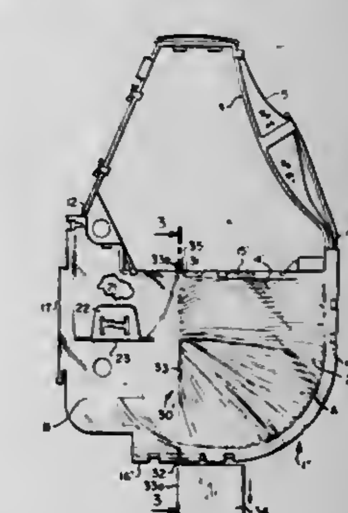

1. In a ribbon cartridge of the type having a body portion wherein an endless ribbon is contained in a fan-folded condition during use, the body portion having spaced apart inlet and outlet apertures for the entry and exit of a run of ribbon and a drive aperture in one main wall adjacent the inlet aperture to permit the driving of the ribbon during use, the improvement comprising: removable partitioning means extendable entirely across and through the body portion between the inlet and outlet apertures for separating the body portion into a first compartment at the outlet aperture side wherein the ribbon can be contained in a fan-folded condition prior to the first use of

the cartridge and a second compartment at the inlet aperture side including the entire drive aperture.

4,301,958
ARRANGEMENT FOR AUTOMATICALLY FABRICATING AND BONDING SEMICONDUCTOR DEVICES

Tatsuo Hatakenaka, Yokohama; Kiyouhei Tamaki, Tama, and Tetsuo Nanbu, Tokyo, all of Japan, assignors to Fujitsu Limited, Kawasaki, Japan

Filed Aug. 24, 1979, Ser. No. 69,286

Claims priority, application Japan, Aug. 24, 1978, 53-115108[U]; Aug. 25, 1978, 53-102814

Int. Cl.[3] H01L *21/58*

U.S. Cl. 228—4.5 17 Claims

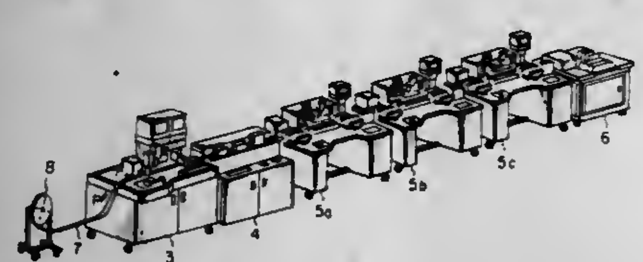

1. A system for automatically fabricating and bonding semiconductor devices using lead frames and semiconductor chips, which comprises:

(a) a single automatic die bonder including (i) bonding means for successively mounting semiconductor chips on respective lead frames supplied in a continuous strip, (ii) cutting means for cutting the continuous strip of lead frames into sheets comprised of a given number of lead frames after completion of the chip mounting, and (iii) transport means for conveying the cut sheets;

(b) buffer means operatively connected to said die bonder for temporarily holding the cut sheets of a given number of lead frames supplied thereto from said transport means of said automatic die bonder, said buffer means including (i) means for conveying the cut sheets along a transport path, (ii) at least one magazine storage means for storing said cut sheets provided at an intermediate position along the transport path of said conveying means and having a plurality of sheet-holding racks, and (iii) operating means for positioning said sheet-holding racks of the magazine storage means to a desired position relative to the transport path of said conveying means; and

(c) a plurality of automatic wire bonders, operatively and successively connected together with the first of said wire bonders being operatively connected to said buffer means, for selectively subjecting unprocessed sheets supplied from said buffer means or the preceding wire bonder to electrical conductor wiring processing or transporting sheets to a succeeding wire bonder, each said automatic wire bonder including (i) main transport conveyor means for conveying sheets fed from said buffer means or the preceding wire bonder along a predetermined transport path, (ii) first transfer conveyor means for selectively supplying unprocessed sheets, which have been fed to said main transport conveyor means, to a wire bonding region, (iii) wire bonding means for wire processing sheets supplied to the wire bonding region, and (iv) second transfer conveyor means for discharging the wire-processed sheets from the wire bonding region to said main transport conveyor means for subsequent transport; and

wherein said one automatic die bonder, buffer means, and the plurality of automatic wire bonders are connected together along a continuous automated operational line for fabricating and bonding said semiconductor devices at a constant rate.

4,301,959
METHOD SERIES PRODUCTION OF AN OUTER COLUMN OF A SAFETY STEERING COLUMN FOR AUTOMOTIVE VEHICLES

Hubertus Benteler, Bielefeld; Wolfgang Streubel, Barntrup, and Egon Olszewski, Paderborn-Elsen, all of Fed. Rep. of Germany, assignors to Benteler-Werke A.G., Paderborn, Fed. Rep. of Germany

Filed Dec. 12, 1979, Ser. No. 102,941

Claims priority, application Fed. Rep. of Germany, Dec. 30, 1978, 2856877

Int. Cl.[3] B23K *31/06*

U.S. Cl. 228—102 8 Claims

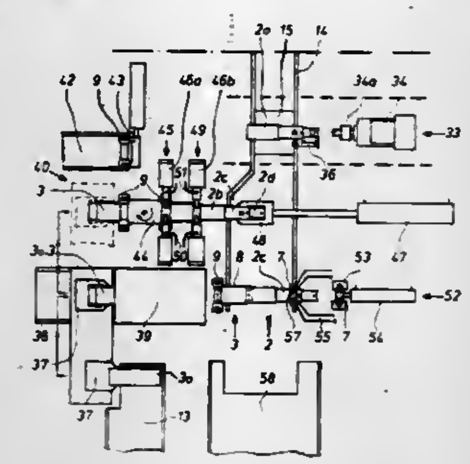

1. A method for series-production of an outer column for a safety steering column for motor vehicles from two tubular blanks and pressed metal sheet parts to attach the outer column to parts of a motor vehicle, comprising the steps of stepwise transporting a first tubular blank to a plurality of working stations for deforming or punching said first tubular blank to form a substantially smooth walled protecting tube of the outer column therefrom; simultaneously feeding a second tubular blank to a corrugation station in which the second tubular blank is transformed into a corrugated tube; feeding the protecting tube and the corrugated tube against each other so that end portions of said tubes overlap; welding said overlapping end portions of said tubes to each other in a main welding station; welding at least one pressed metal sheet part in an auxiliary welding station to one of said tubes; checking the work performed by at least one working station by at least one automatic control station coordinated therewith; checking the weld produced by at least one welding station by a further automatic control station coordinated with said one welding station; stopping upon asserting of a faulty part in one of said control stations operation of all working and welding stations upstream of said one control station under simultaneous blocking the parts in said upstream working and welding stations; and permitting resuming operation of said working and welding stations only after removing of the faulty part.

4,301,960
PACKAGE FOR FOODSTUFFS

Richard G. Alexander, Bloomfield Hills; Earl F. Gilbert, Farmington Hills, and Frederic J. Kelly, Birmingham, all of Mich., assignors to Westvaco Corporation, New York, N.Y.

Filed May 20, 1980, Ser. No. 151,736

Int. Cl.[3] B65D *5/20*

U.S. Cl. 229—30 2 Claims

1. A package for foodstuffs or the like comprising in combination an open partitioned tray formed from a single blank of paperboard and an enclosing bag, said tray including a pair of equally sized bottom panels separated from one another by a pair of partition panels, said partition panels being integral with and foldably attached to the tray bottom panels along the adjacent edges of said bottom panels and foldably attached together along a pair of spaced apart score lines except in a selected region thereof where a single cut line is applied, side walls foldably attached to the sides of said tray bottom panels, end flaps foldably attached to the adjacent ends of said tray side walls and folded between the partition panels when the tray is assembled, and at least one friction locking means integrally cut from said partition panels for retaining said tray in its

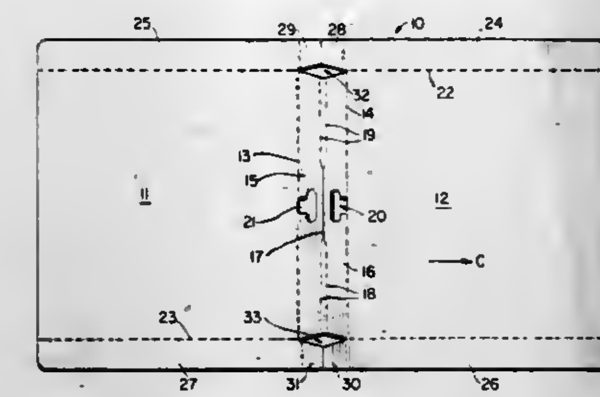

assembled condition, said friction locking means comprising a cut out in one partition panel into which is inserted a foldable tab cut from the other partition panel said friction locking means being located in the region of the cut line between said partition panels.

4,301,961
PLASTIC REINFORCED PAPER AND BAG MADE THEREOF

John Rodish, Fort Wright, Ky., assignor to Polynovus Industries, Inc., Fort Wright, Ky.

Filed Oct. 29, 1979, Ser. No. 88,863

Int. Cl.[3] B32B *7/14;* B65D *33/02, 29/04*

U.S. Cl. 229—55 21 Claims

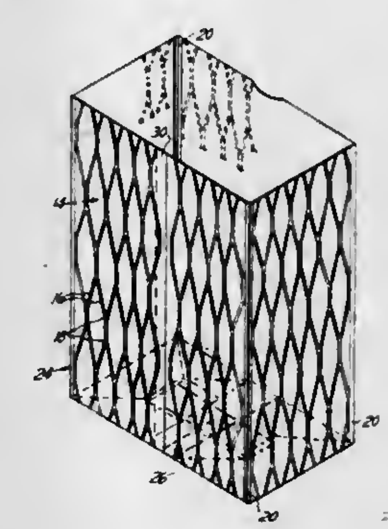

19. A reinforced shopping bag comprising a length of paper having a single surface provided with a permanent regular pattern of stripes of plastic material directly deposited thereon and fused thereto, with at least a portion of said plastic material impregnating said paper directly below said stripes, said regular pattern forming a closed mesh pattern leaving portions of said surface uncoated by said plastic material, and said pattern comprising four parallel substantially wider rectilinear stripes of said plastic material deposited on said surface and joined with portions of said closed mesh pattern, said rectilinear stripes being disposed at each corner of said bag when said length of paper is formed as a rectangular tube for defining said bag with an end of said rectangular tube being folded in the form of flaps attached together by means of an adhesive for forming the bottom panel of said bag.

4,301,962
STRAIGHT LINE GLUED FOLDER

Lewis P. Monckton, Addison, and John J. Austin, LaGrange both of Ill., assignors to Champion International Corporation, Stamford, Conn.

Filed Mar. 14, 1980, Ser. No. 130,234

Int. Cl.[3] B65D *27/08*

U.S. Cl. 229—72 8 Claims

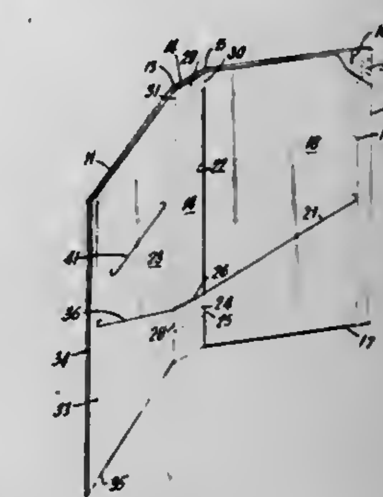

5. A one-piece paperboard straight line glued no-depth folder comprising:

an outer member portion including first and second rectangular panels,

a spinal fold line at the edge of each of said first and second panels,

a rectangular spinal panel connected between said first and second panels by said spinal fold lines,

a window within said first panel for displaying information,

an inner member portion comprising first and second rectangular panels respectively connected to said respective first and second outer member panels by panel fold lines perpendicular to said spinal fold lines,

a slit in each of said first and second inner member portion panels, said slits being diagonally opposite to one another,

a horizontal slit in said first inner member panel parallel to said panel fold line,

a bridging panel between said inner member panels and connected to said inner member panels by fold lines for strengthening and to form a spinal area to hold a premium item,

and glue lines adhering the edge area of the first inner member panel to the edge area of the first outer member panel and the edge area of the second inner member panel to the edge area of the second outer member panel.

4,301,963
INTEGRAL ONE PIECE CENTRIFUGE TUBE

Steven T. Nielsen, Sunnyvale, Calif., assignor to Beckman Instruments, Inc., Fullerton, Calif.

Continuation of Ser. No. 912,698, Jun. 5, 1978, abandoned. This application Feb. 15, 1980, Ser. No. 121,755

Int. Cl.[3] B04B *7/00, 15/00*

U.S. Cl. 233—26 15 Claims

1. A centrifuge tube for holding a fluid sample said tube being designed in such a manner that said fluid sample is permanently sealed within said centrifuge tube without a separate tube capping assembly, said centrifuge tube comprising:

an elongated cylindrical central portion of uniform shape;

an enclosed hemispherical bottom portion integrally formed with said central portion;

an enclosed top portion integrally formed with said central portion to form in conjunction with said central portion and said bottom portion a single interior chamber within said tube with a smooth rounded surface and without sharp corners; and

a neck portion integrally formed on and protruding from

said top portion, said neck portion being designed to initially be open as a fill port to receive said fluid sample, said neck portion being permanently sealed after receipt of said fluid sample prior to centrifugation, said tube with said neck portion sealed to provide an integral completely enclosed and sealed centrifuge tube for placement within a centrifuge rotor, said neck portion designed to be severed after centrifugation to provide an access port to retrieve said fluid sample, said tube being made from a single integral piece of material and having prior to receipt of said fluid sample no heat seal junctions located anywhere on the tube configuration to cause possible weak areas during centrifugation, said top portion with said fill port when said fill port is permanently sealed being capable of withstanding centrifugally induced forces of said fluid sample within said tube during centrifugration.

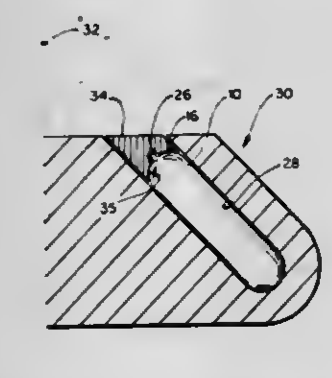

14. In a centrifuge apparatus for centrifuging a fluid sample, the combination comprising:
a main rotor body having a plurality of cavities for receipt of centrifuge tubes, the longitudinal axis of said cavities oriented substantially parallel to the spin axis of the rotor;
at least one centrifuge tube within one of said cavities, said tube containing a fluid sample and being integrally formed from a single piece of material including an upper portion enclosing said tube to create a hermetically sealed interior chamber, said upper portion of said tube being exposed within said cavity;
a spacer plug positioned within said cavity over said exposed upper portion of said tube; and
means secured to said rotor for holding said spacer plug tightly adjacent said upper portion of said tube to provide exterior support to said upper portion of said tube in reaction to the centrifugally induced force of said fluid sample on said upper portion of said tube.

4,301,964
SWINGING TUBE HOLDER
Mark J. Cowell, Mountain View, Calif., assignor to Beckman Instruments, Inc., Fullerton, Calif.
Filed Jan. 24, 1980, Ser. No. 114,876
Int. Cl.³ B04B *15/00, 9/12*
U.S. Cl. 233—26 **6 Claims**

1. A centrifuge rotor tube holder comprising:
an elongagted panel having a specified thickness for placement within a rotor and having a front surface and a back surface with at least one aperture through said panel for receipt of a centrifuge tube;
a first semicircular tapered portion at a specified slope through said aperture along said thickness of said aperture from said front surface toward said back surface; and
a second semicircular tapered portion at a specified slope through said aperture along said thickness of said aperture from said back surface toward said front surface, said first and second semicircular tapered portions being on opposite halves of said aperture, when viewing said front surface of said panel perpendicular to said aperture, said second semicircular tapered portion not being visible, said tapered portions in combination with each other within said aperture forming a tapered aperture so that said tube will assume a slanted orientation when placed in said

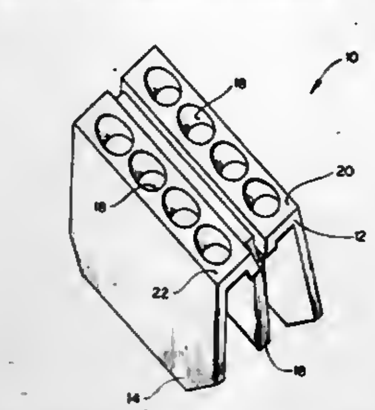

aperture when said rotor is at rest, said tube pivoting within said panel to a position perpendicular to rotor spin axis when said rotor is operating.

4,301,965
HEAT COLLECTOR SYSTEM
Alfred Ritter, Mülheim, and Jürgen Kleinwächter, Lörrach, both of Fed. Rep. of Germany, assignors to Max-Planck-Gesellschaft zur Förderung der Wissenschaften e.V., Fed. Rep. of Germany
Division of Ser. No. 829,427, Aug. 31, 1977. This application Oct. 16, 1979, Ser. No. 85,431
Claims priority, application Fed. Rep. of Germany, May 6, 1977, 2720319
Int. Cl.³ F24J *3/02*
U.S. Cl. 237—2 B **7 Claims**

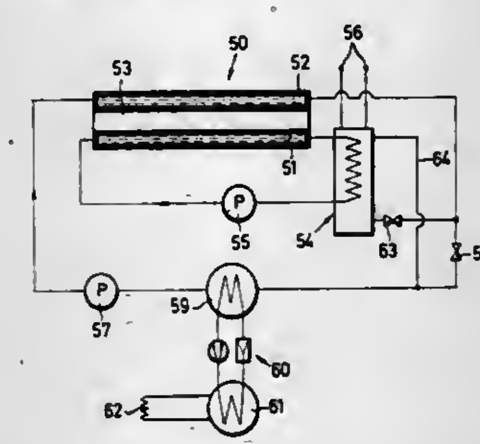

1. A heat collector system comprising:
(a) a heat collector including an upper chamber and a lower chamber through which chambers a heat transmitting fluid is flowable,
(b) a heat pump including an evaporator and a condenser,
(c) a heat exchanger having a primary flow line and a secondary flow line, said primary and secondary flow lines being in heat exchange relationship with respect to each other and said secondary flow line being effective to establish a heat exchange relationship with a heat consuming means,
(d) the two chambers are separated by a transparent insulation layer with the upper chamber being made of transparent material and the lower chamber having a structural configuration effective to absorb heat radiation,
(e) said upper heat chamber having an outlet connected in a heat exchange relationship to the evaporator of said heat pump,
(f) said lower chamber being series-connected to direct said heat transmitting fluid to the primary flow line of said heat exchanger,
(g) valve means for selectively connecting the secondary flow line of the heat exchanger between the upper heat chamber and the evaporator.

4,301,966
OIL BURNER
Anton Schwarz, Höhenstrasse 24a, Innsbruck, Austria (A-6020)
Division of Ser. No. 851,478, Nov. 14, 1977, abandoned. This application Oct. 9, 1979, Ser. No. 82,984
Claims priority, application Austria, Nov. 12, 1976, 8460/76; Fed. Rep. of Germany, May 2, 1977, 2719573
Int. Cl.³ B05B *1/24*
U.S. Cl. 239—75 **3 Claims**

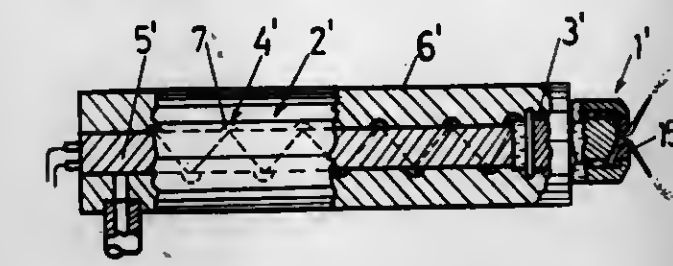

1. An oil burner comprising, a pressure atomizing nozzle having a swirl chamber and rated for usual flow rates of 0.4 to 0.85 gallons per hour, a pressure supply of light fuel oil having a viscosity of about 12 centistoke at 20° C., and lower connected to said atomizing nozzle swirl chamber, a flow heater connected to said atomizing nozzle upstream of said swirl chamber for preheating the fuel oil to a temperature of up to 150° C. and below a coking and cracking temperature of the light fuel oil, said flow heater comprising a cylindrical heating element having a cylindrical outer surface, an oil feeding pipe surrounding said cylindrical heating element, a fitting connected to said atomizing nozzle, said oil feeding pipe connected to said fitting, a block of good heat conducting material pressing against the outer surface of said cylindrical heating element and said fitting for establishing a thermal connection therebetween, said oil feeding pipe defined in the form of a helical recess at the interface of said block and said heating element, said cylindrical heating element being shink fitted into a bore of said block, whereby said atomizing nozzle can burn light fuel oil at lower flow rates than that for which it is rated.

4,301,967
INTERMITTENT SPRINKLER
Edwin J. Hunter, Santa Fe, Calif., assignor to The Toro Company, San Marcos, Calif.
Division of Ser. No. 827,787, Oct. 13, 1977, Pat. No. 4,294,642. This application Dec. 19, 1979, Ser. No. 105,399
Int. Cl.³ B05B *1/08*
U.S. Cl. 239—99 **11 Claims**

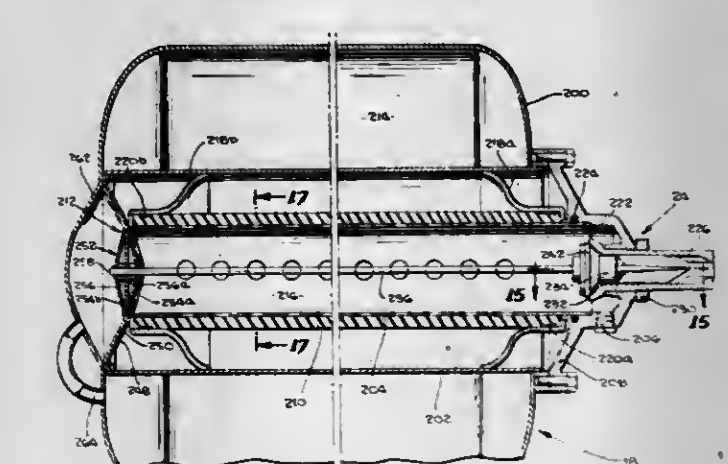

1. Intermittent sprinkler apparatus, comprising, a housing,
an expandable water accumulating reservoir, disposed within said housing,
means for supplying irrigating water through said housing to said reservoir, said reservoir comprising a flexible, resilient bladder means mounted within said housing to receive water from said water supply,
nozzle means on said housing providing a discharge outlet from said reservoir,
blocking means moveable between a first position blocking said nozzle means, and a second position exposing a water discharge path from said reservoir through said nozzle means, and
means responsive to the pressure of the water accumulated in said reservoir exceeding a predetermined threshold level for moving the blocking means from said first to said second position, and for returning said blocking means to said first position when said reservoir pressure falls below a second threshold level following discharge of water through said nozzle means,
said first threshold level corresponding to a pressure at which said reservoir is substantially expanded.

4,301,968
TRANSDUCER ASSEMBLY, ULTRASONIC ATOMIZER AND FUEL BURNER
Harvey L. Berger, Poughkeepsie, and Charles R. Brandow, Highland, both of N.Y., assignors to Sono-Tek Corporation, Poughkeepsie, N.Y.
Division of Ser. No. 739,812, Nov. 8, 1976, Pat. No. 4,153,201. This application Apr. 3, 1979, Ser. No. 26,684
Int. Cl.³ B05B *17/06*
U.S. Cl. 239—102 **4 Claims**

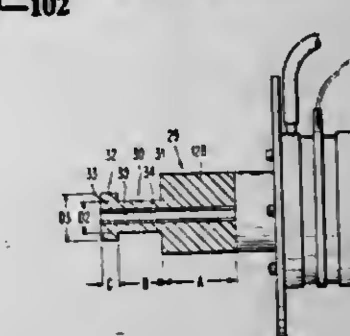

1. An ultrasonic atomizer having an atomizing surface, means for vibrating the atomizing surface with sufficient energy to atomize a liquid, and means for delivering a liquid to said atomizing surface, said liquid delivery means including a passage extending through said atomizer to said atomizing surface, wherein the improvement comprises a decoupling sleeve mounted within said passage and extending to said atomizing surface for isolating the liquid from contact with said passage, said decoupling sleeve being made of a material having different acoustical energy transmitting properties than the material of said atomizer, such that vibrational energy in the atomizer is attenuated by the sleeve.

4,301,969
OXYGEN LANCE NOZZLE
Kenneth C. Sharp, 8 De Brus Ct., Marine Parade, Saltburn by-the-sea, Cleveland, England
Filed Feb. 25, 1980, Ser. No. 124,560
Int. Cl.³ B05B *15/00*
U.S. Cl. 239—132.3 **3 Claims**

1. An oxygen lance nozzle including a block of copper, a central bore for conducting a flow of oxygen to said block, a plurality of cooling pipes disposed in equally spaced relation around said central bore, said block of copper comprising a relatively thick tip for the nozzle with the ends of said cooling pipes mounted in said thick tip to conduct heat from the tip, certain of said cooling pipes diagonally opposed and curved inwardly toward the center of the nozzle to cool the central area of the nozzle, a plurality of venturi tubes extending through said tip and conducting oxygen through the tip, an oxygen supply pipe in communication with said central bore, a water sleeve surrounding said plurality of cooling pipes, and an outer water jacket surrounding the cooling pipes disposed between said sleeve and said jacket, both said sleeve and said

jacket being secured to the thick copper tip of the nozzle, and said water sleeve provided with one or more openings affording communication through the sleeve between chambers

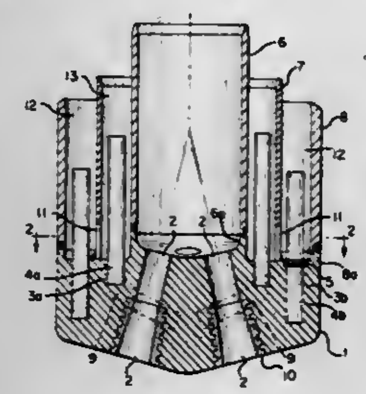

formed by the outer jacket, the water sleeve and said supply pipe, said cooling pipes extending vertically into said chambers at opposite sides of said sleeve and cooling said tip by water from said chambers.

4,301,970
POWERED AEROSOL SPRAY DEVICE
Margherita Craighero, Largo del Pecile 5, 33100 Udine, Italy
Filed Jun. 20, 1979, Ser. No. 50,338
Claims priority, application Italy, Jun. 20, 1978, 83405 A/78
Int. Cl.³ B05B *7/26*
U.S. Cl. 239—338 **4 Claims**

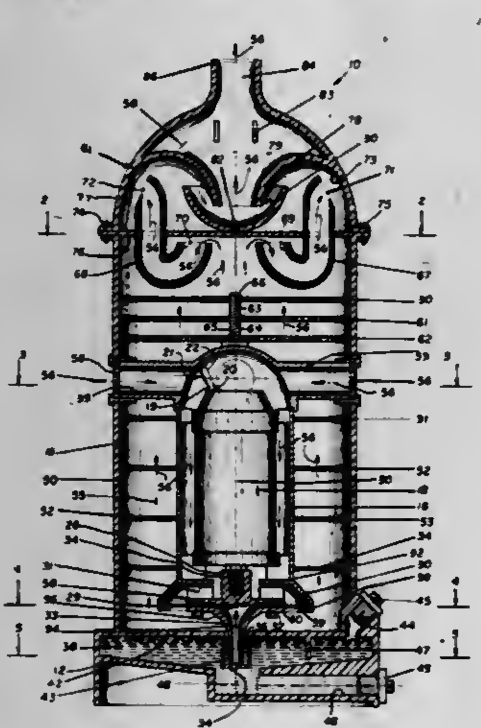

1. A powered aerosol spray device comprising:
(a) reservoir means for storing liquid which is to be sprayed in fine micelles;
(b) a hollow housing disposed upon said reservoir and including;
(i) first aperture means for permitting communication therebetween,
(ii) second aperture means through which said fine micelles leave said housing,
(iii) third aperture means for providing intake air from the atmosphere,
(iiii) an inner container including fourth aperture means, and
(iiiii) air duct means, said air duct means connecting said fourth aperture means to said third aperture means for providing a continuous intake inflow path;
(c) motor means disposed within said housing and centrally disposed within said fourth aperture means with its drive shaft extending downwardly towards said reservoir, said motor means being adapted to be connected to a source of electrical energy;
(d) impeller means affixed upon said motor drive shaft disposed within said intake air flow path;
(e) means affixed to said motor means drive shaft and disposed within said first aperture means for directing said liquid upwardly towards said impeller means for mixing with said intake air; and
(f) means for filtering said liquid and gaging said micelles prior to said micelles leaving said second aperture means.

4,301,971
ELECTRICALLY-DRIVEN SPRAY GUN
Richard T. Cornelius, deceased, late of Minnetonka, Minn., and by Richard G. Lareau, executor, St. Paul, Minn., assignors to Cornelius Engineering Center, Inc., Golden Valley, Minn.
Filed Aug. 23, 1979, Ser. No. 69,047
Int. Cl.³ B05B *9/043*
U.S. Cl. 239—351 **13 Claims**

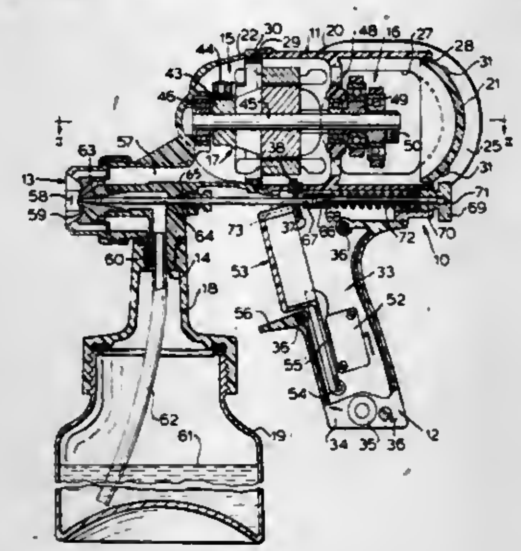

2. A spray gun for compressed-air spraying of liquids, comprising:
(a) a casing having a handle near one end, and a nozzle at its opposite end communicating with a liquid intake port on said casing;
(b) an electric motor disposed within and supported by said casing;
(c) an air compressor disposed within said casing, an apertured lateral wall of said casing adjacent to said handle being air inlet means of said compressor, said compressor having an outlet communicating with said nozzle, and said compressor being drivably connected to said electric motor;
(d) said electric motor being disposed in a pressurizable portion of said casing;
(e) said handle being hollow and vented to the atmosphere, and sealed from said pressurizable portion;
(f) a manually actuatable electric switch in said handle;
(g) electric wiring extending from said switch, through a pressure seal in the wall of said casing, and to said electric motor; and
(h) a liquid container detachably secured to said casing at and in fluid communication with said liquid intake port, there being an air passage from said compressor outlet into said liquid container for pressurizing liquid therein.

4,301,972
MIXING FAUCET VALVE WITH DIVERTER AND ANTI-SYPHONING MEANS
John Rudelick, Milwaukee, Wis., assignor to Milwaukee Faucets, Inc., Milwaukee, Wis.
Filed May 23, 1980, Ser. No. 152,881
Int. Cl.³ F16K *19/00*
U.S. Cl. 239—443 **6 Claims**

1. An anti-syphoning mixing faucet valve comprising, a

casing having an outlet communicating with a spout, a body portion having a valve chamber and a discrete auxiliary chamber, said auxiliary chamber having a discharge opening communicating with said spout, said body portion having a pair of inlet passages each adapted to be connected to a liquid supply line, a control valve received in said valve chamber and having a pair of inlet passages each communicating with a respective one of said first mentioned inlet passages, a tube communicat-

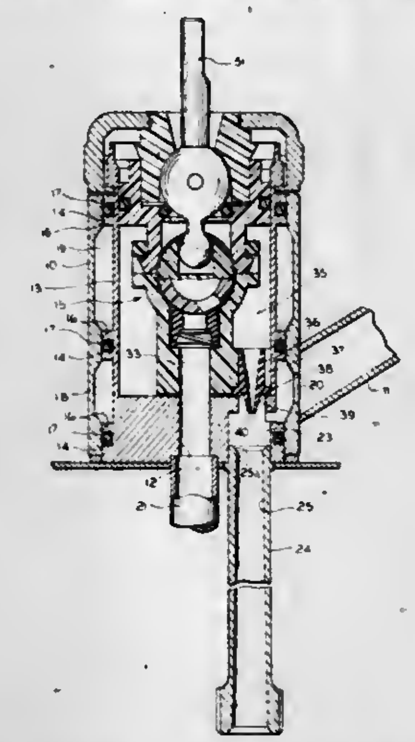

ing with said auxiliary chamber, a spray head having a manually operable valve connected to said tube, check valve means intermediate said valve chamber and said auxiliary chamber for increasing the velocity of flow of liquid from said valve chamber whereby when said manually operable valve is opened liquid will flow into said spray head and when manually operable valve is closed liquid will flow through said spout, said check valve means adapted to close opposite to the direction of normal flow in said auxiliary chamber.

4,301,973
BENEFICIATION OF IRON ORE
Ralph W. M. Lai, Lexington, Mass., assignor to Kennecott Corporation, Stamford, Conn.
Filed Dec. 17, 1979, Ser. No. 104,671
Int. Cl.³ B02C *19/00*
U.S. Cl. 241—20 **12 Claims**

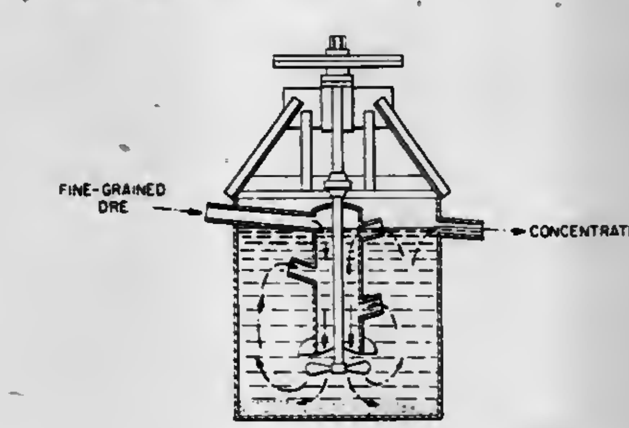

1. A process for concentrating iron oxide from an iron oxide containing ore comprising:
a. grinding the ore;
b. introducing the ground ore into a flotation cell in the form of pulp;
c. introducing a flotation agent into said pulp and maintaining the pH of the pulp alkaline, said flotation agent comprising an isostearic acid which is liquid at room temperature;
d. introducing air into the flotation cell to cause the iron oxide component of the ore to float away from remaining portions of the ore; and
e. collecting the iron oxide component from the top of the cell.

4,301,974
REFINING APPARATUS
Axel H. Sjöbom, Njurunda, Sweden, assignor to Sunds Defibrator Aktiebolag, Sweden
Filed Nov. 30, 1979, Ser. No. 98,826
Claims priority, application Sweden, Dec. 1, 1978, 7812397
Int. Cl.³ B02C *7/11*
U.S. Cl. 241—244 **7 Claims**

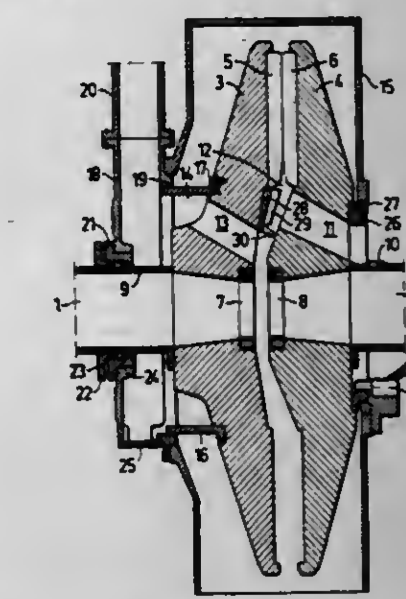

1. Apparatus for refining lignocellulose-containing material comprising a refiner housing, first and second refining disc members rotatably mounted within said refiner housing, each of said first and second refining disc members including an inner surface and an outer surface, said refining disc members being mounted so that said inner surfaces of said refining disc members are in opposed face-to-face relationship defining a refining space therebetween, a feed passage extending from said outer surface of said first refining disc member to said inner surface of said first refiner disc member for feeding said lignocellulose-containing material to said refining space, a steam passage extending from said outer surface of said second refining disc member to said inner surface of said second refining disc member so as to permit steam generated in said refining space to pass from said refining space to a point within said refiner housing, channel means rotatable with said second refining disc member for conducting steam from said outer surface of said second refining disc member entirely through said refiner housing, and passage means located entirely outside of said refiner housing for conducting away steam exiting from said channel means, said passage means being sealingly connected to said channel means to prevent leakage of steam therefrom.

4,301,975
DEVICE FOR SUPPLYING A PAIR OF WIRES TO A ROTATING WIRE GUIDE IN A COIL WINDING MACHINE
Giuseppe Camardella, Saronno, Italy, assignor to Tekma Kinomat S.p.A., Caronno Pertusella, Italy
Filed Nov. 20, 1979, Ser. No. 95,939
Claims priority, application Italy, Nov. 24, 1978, 30142 A/78
Int. Cl.³ B65H *54/00*
U.S. Cl. 242—25 R **4 Claims**

1. A machine for winding two parallel wires in untwisted relation onto a stationary coil core, comprising a wire guide

shaft having an axial bore for guiding the two wires, means for rotating said shaft about its axis, a wire guide carried by said wire guide shaft and having two parallel guiding bores, one for each of said two wires, that are spaced a substantial distance from said axis, a shaft on which is supported a first spool for feeding a first of said two wires, said shaft having an axial bore therethrough which is coaxial with and communicates with said bore of said wire guide shaft, means mounting said shaft for the support of said first spool freely rotatably on said wire

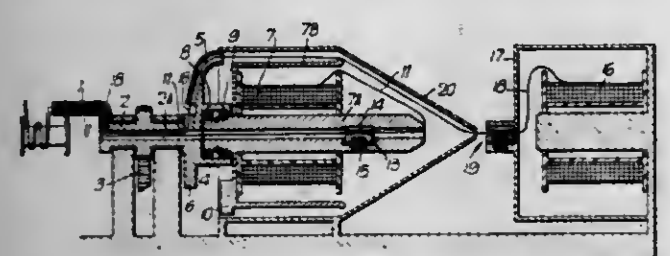

guide shaft, means for maintaining said shaft for the support of said first spool stationary while said wire guide shaft rotates, an arcuate guide duct secured to said wire guide shaft, said duct extending radially away from said axis and then curving over into an inlet end that extends parallel to said axis, and a second stationary spool for feeding the second of said two wires, means for feeding wire from said second spool radially outwardly of said first spool and into said inlet end of said arcuate guide duct, and means for braking each of said wires.

4,301,976
TAPE CARTRIDGE
Glenn A. Mattson, Indianapolis, Ind., assignor to RCA Corporation, New York, N.Y.
Filed Jan. 18, 1979, Ser. No. 49,584
Int. Cl.³ G11B *23/10;* B65H *17/48*
U.S. Cl. 242—55.19 A **4 Claims**

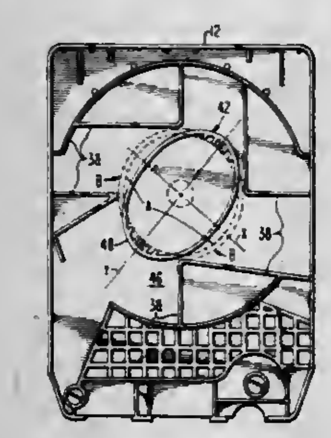

1. In a tape cartridge of the type wherein the tape travels in a continuous loop within a case and is wound in a single circular pack about a hub of a reel, with the tape pack having a tape output at an inside diameter thereof and a tape input at an outside diameter thereof; and wherein the case includes clearance structure to provide space in which unwound tape may accumulate and the width of the tape may traverse from the tape output at one side of the case to the tape input at the other side thereof, the improvement comprising:
bearing surface means integrally disposed on the case for supporting the tape pack between the reel hub and the clearance structure to preclude segments of the tape pack from slipping therebetween, said bearing surface means having separate portions with each said portion extending relative to the reel hub center from a location on a circle of no greater diameter than the diameter of the reel hub to a location on a circle of no less diameter than the circle at which the clearance structure in closest proximity to said portion of said bearing surface means is located.

4,301,977
DUAL TENSION STRAP RETRACTOR
Elmer C. Yang, Orange, Calif., assignor to Pacific Scientific Company, Anaheim, Calif.
Filed Dec. 3, 1979, Ser. No. 99,629
Int. Cl.³ A62B *35/00;* B65H *75/48*
U.S. Cl. 242—107 **17 Claims**

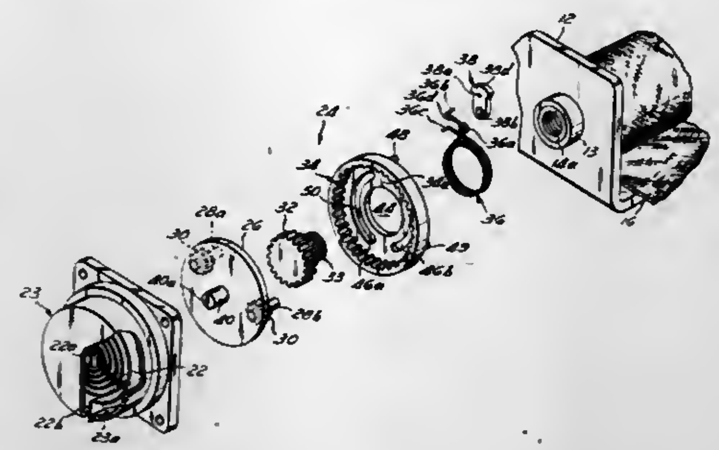

1. Restraint apparatus comprising a support, a reel rotatably mounted on the support, a flexible element wound on the reel, one spring for urging the reel into an element retracted position, and drive means interconnecting said spring and the reel including means for automatically shifting the retracting force provided by said spring on the element from a high tension mode to a reduced but still positive tension mode wherein said automatic shifting means includes:
a planetary gear system including a sun gear attached to said reel, a planetary gear meshed with said sun gear, and a ring gear meshed with said planetary gear;
means coupled to said spring and to said planetary gears for automatically shifting said planetary gear system from direct drive of said reel by said spring in said high tension mode and for shifting said planetary gear system into indirect drive of said reel by said spring through a different load ratio during reduced tension operation.

4,301,978
ELECTRO-MAGNETIC THREAD TENSION CONTROL FOR SEWING MACHINES
John A. Herr, Garwood, and Wolfgang Jaffe, Roselle Park, both of N.J., assignors to The Singer Company, Stamford, Conn.
Filed Apr. 5, 1979, Ser. No. 27,412
Int. Cl.³ D05B *47/00, 47/04;* B65H *59/22*
U.S. Cl. 242—150 R **1 Claim**

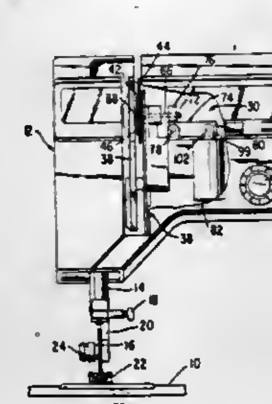

1. A thread tension device for sewing machines comprising a pair of thread engaging elements supported for movement toward and away from each other to accommodate therebetween thread having different diameters, an electro-magnetic actuator having an electrical coil part and a ferro-magnetic armature part, means for telescopically relating said electrical coil and ferro-magnetic armature parts of said electro-magnetic actuator for lengthwise relative movement parallel to each other within a range, said parts being arranged to develop a uniform force therebetween throughout said range of relative movement in response to any given level of electrical current input to said electrical coil part, said parts being arranged to develop a uniform force therebetween by disposing said armature part within the boundaries of said electrical coil in all positions within said relative range of movement, said armature part having a dimension in the direction of said parallel movement which is smaller than that of said electrical coil part by at least the dimension of said range of movement, and in which both of said actuator parts are electrically and magnetically uniform throughout their entire length, and means for applying said uniform force developed between said electromagnetic actuator parts to urge said thread engaging elements together.

4,301,979
WINCH
Paul D. Cavanagh, 495 Newbury St., Danvers, Mass. 01923
Filed Feb. 19, 1980, Ser. No. 122,756
Int. Cl.³ B66D *1/30;* B65H *75/28*
U.S. Cl. 242—217 **2 Claims**

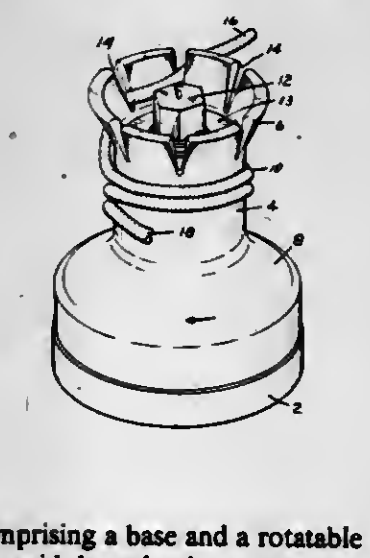

1. A winch comprising a base and a rotatable circular drum mounted thereon, said drum having an upper end,
means for rotating said drum, said means being located axially of said drum,
the upper end of said drum having extending upwardly therefrom a circular wall flaring outwardly at an angle from the vertical to control the position of turns of rope being wound on said drum,
said flared end wall containing a plurality of tapered notches adapted to receive and to hold against longitudinal movement under the forces present in the operation of said winch, the free end of the rope when placed in at least two of said notches,
said tapered notches being of such dimensions as to be wider at their upper ends and narrower at their lower ends than the diameter of the rope placed therein,
and means located below the bottom of said notches and surrounding said drum rotating means for closing the upper end of said drum.

4,301,980
PROPULSION SYSTEM FOR A V/STOL AIRPLANE
Ganey W. Bradfield, Fort Worth, and Glynn P. Cragia, Jr., Irving, both of Tex., assignors to General Dynamics Corporation, Forth Worth, Tex.
Filed Dec. 29, 1978, Ser. No. 974,589
Int. Cl.³ B64C *29/00*
U.S. Cl. 244—12.5 **9 Claims**

1. A propulsion system for a vertical and short takeoff and landing airplane, comprising:
a nacelle having an upper surface and a lower surface forming an upper surface and a lower surface of an airfoil respectively;
turbine driven fan means for forcing air through the nacelle;
an upper flap located near the trailing edge of the nacelle upper surface and forming a part of the airfoil upper surface, the upper flap being pivotal from a horizontal flight position generally aligned with the nacelle upper surface to a vertical flight position pointing generally downward;
a lower flap adjacent the trailing edge of the nacelle lower surface and forming a part of the airfoil lower surface, the lower flap being pivotal from a horizontal flight position generally aligned with the nacelle lower surface to a vertical flight position pointing generally downward; and
an intermediate flap secured to the nacelle and pivotal between a horizontal flight position in which the intermedi-

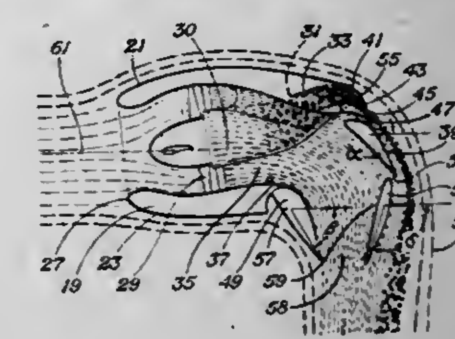

ate flap is rearward of the lower flap, generally aligned with the nacelle lower surface and forming a part of the airfoil lower surface and a vertical flight position in which the leading edge of the intermediate flap is adjacent the trailing edge of the upper flap and in which the intermediate flap points generally downward, becoming the trailing edge of the airfoil upper surface;
in the horizontal flight position, the space between the upper flap and the intermediate flap defining a horizontal flight main thrust nozzle; and
in the vertical flight position, the space between the lower flap and intermediate flap defining a vertical flight main thrust nozzle.

4,301,981
AIRCRAFT WITH ROTARY WING
Joseph Hartt, 7503 Marin Dr., Suite 3, B-C, Englewood, Colo. 80110
Filed Jun. 29, 1979, Ser. No. 53,217
Int. Cl.³ B64C *29/00*
U.S. Cl. 244—12.2 **11 Claims**

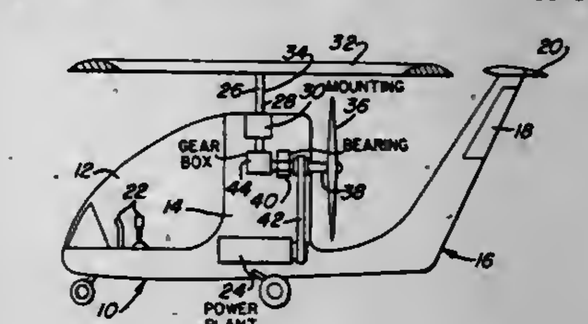

1. An aircraft provided with means for achieving flight in various modes including generally vertical ascent and descent, hovering, and lateral travel, comprising:
a fuselage provided with a power plant, a pilot's compartment having pilot operable control means, and directional control surfaces;
a vertically extending axle shaft rotatably mounted at its lower end on the fuselage;
and an annular wing coaxially mounted at the upper end of the shaft, said wing having upper and lower surfaces and being rotatable about the axis of the shaft;
the rotation of the wing applying centrifugal force to the air adjacent to the upper and lower surfaces to cause radial air flow across the surfaces from the inner periphery of the wing to the outer peripheral edge to energize the boundary layer and enhance laminar flow and produce a lifting force, the wing being free of any obstruction to the flow of air at any point around its outer periphery;

a plurality of upstanding vanes are mounted on the radially inner portion of the wing and are spaced substantially equally around the inner periphery and extend substantially vertically;
the power plant is drivingly connected to the axle shaft and thence to the wing to cause its rotation, the vanes rotating with the wing, driving the air adjacent to the inner portion of the wing centrifugally across the wing to enhance the lifting force; and
said vanes being retractable at least partially into the contour of the annular wing to reduce their effect.

4,301,982
AIRCRAFT BLADE CLAMP
James P. Tiemann, 17 Crescent Dr., Huntington, N.Y. 11729
Filed Aug. 6, 1979, Ser. No. 64,220
Int. Cl.³ B64C *27/50*
U.S. Cl. 244—17.11 29 Claims

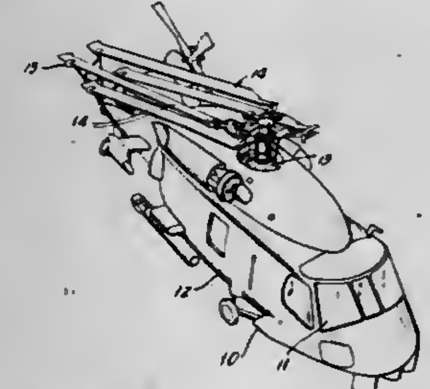

5. A clamping device for helicopter rotor blades or the like wherein the rotor blades have a leading end portion with a reinforcing spar and a blade profile with opposing surface portions, said clamping device comprising clamping means of predetermined size for clampingly engaging opposing surface portions of the rotor blade at the spar while avoiding gripping contact with the surface portions of the rotor blade that are away from the spar, said clamping means including a pair of cooperating opposing jaw members respectively corresponding to the opposing surface portions of said rotor blade, at least one of said jaw members being movable from a predetermined release limit position with respect to the other jaw member wherein said clamping means do not grip the opposing surfaces of said rotor blade, to a predetermined engagement limit position with respect to the other jaw member wherein said clamping means grip the opposing surfaces of said rotor blade at said spar with a predetermined amount of force, and a lever member connected to said one of said jaw members for moving said one jaw member from said release limit position to said engagement limit position and vice-versa to provide a quick engagement and a quick release of said clamping means with respect to said rotor blade.

4,301,983
HIGH ACCELERATION PROTECTIVE SEAT
John J. Horan, Chalfont, Pa., assignor to The United States of America as represented by the Secretary of the Navy, Washington, D.C.
Filed Oct. 29, 1979, Ser. No. 88,904
Int. Cl.³ B64D *25/02;* B60R *21/10*
U.S. Cl. 244—122 R 8 Claims

1. A G-protective seat for an occupant in a vehicle, comprising:
torso support means formed to be rotatably mounted about an axis substantially through the eyes of the occupant within the vehicle so that the torso of the occupant is movable between a substantially erect attitude and a supine posture, said torso means including
a back support adapted to be rotatably coupled to the vehicle in a substantially erect attitude,
a seat pan rigidly connected to the bottom of said back support for supporting the pelvic area of the occupant, and
arcuate means connected to the top of said back support for guiding the rotation thereof substantially about the eyes of the occupant;
leg support means rotatably connected to said torso support means so that the legs of the occupant are movable be-

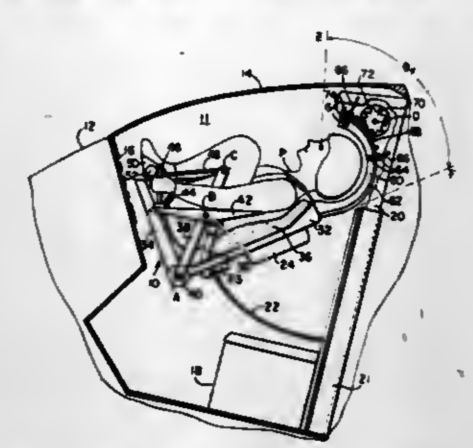

tween a substantially extended position and a fetal posture; and
motor means coupled to said torso and leg support means for collaterally rotating said torso and leg support means so that the occupant is moved into and out of a supine fetal posture for increased high-G tolerance.

4,301,984
VEHICLE LOADING APPARATUS FOR AIRCRAFT
Olason, Ray, Seattle, Wash., assignor to The Boeing Company, Seattle, Wash.
Filed Dec. 21, 1978, Ser. No. 972,150
Int. Cl.³ B64D *9/00*
U.S. Cl. 244—137 R 2 Claims

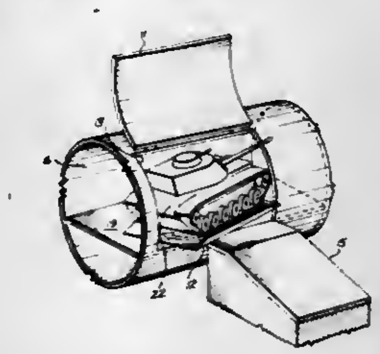

1. A cargo loading apparatus for an aircraft having a fuselage, a fuselage compartment, and a doorway in the side of the fuselage for providing access to the fuselage comprising:
a loading platform pivotally mounted to the fuselage on a fixed axis through said loading platform and within said fuselage compartment, said axis fixed with respect to both said loading platform and said fuselage and located between the centerline of said doorway and a horizontal line parallel to said centerline which passes through one side of said doorway, said loading platform pivotable between a loading position and a stowed position;
means for selectively moving said loading platform between said loading position and said stowed position; and
a loading ramp positionable outside said aircraft adjacent said doorway,
said axis being a vertical axis located at the geometric center of said loading platform.

4,301,985
FURNITURE
L. David Ballard, Hong Kong, Hong Kong, assignor to The Otto Gerdau Co., New York, N.Y.
Filed May 30, 1979, Ser. No. 43,618
Int. Cl.³ A47C *4/02;* F16M *11/16*
U.S. Cl. 248—188 3 Claims

1. An article of furniture constituted by a plurality of sepa-

rate interrelated frame component members configured for being interconnected in adjacent relationship to achieve an assembled condition of said article of furniture, characterized by each of said frame component members comprising a tubular component, means associated with at least one of said frame component members for defining a spigot, and means associated with at least one other of said frame component members for defining a corresponding spigot-receiving aperture for slidably receiving said spigot in fitted, telescoping relationship, said spigot and spigot-receiving aperture being oriented and presented for mutual telescoping interrelationship to position said interrelated component members in joined adjacent condition, and securement means associated with each of said frame component members, separate from said spigot and spigot-

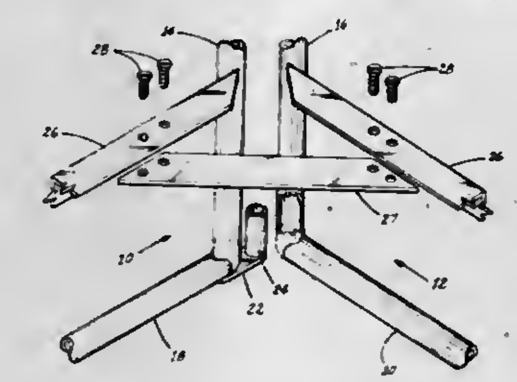

receiving aperture, for interengaging said frame component members to secure and maintain said mutual telescoping interrelationship and for maintaining said frame component members in assembled relationship in correct relative orientation, a first one of said frame members having a lower extremity including means presenting said spigot, the other of said frame members defining a spigot-receiving aperture for being seated upon said spigot, said first frame member being defined by an elbow-shaped tubular structure defining a corner, a plate extending from said corner and having said spigot extending upward from the corner remote end of said plate.

4,301,986
NON-REMOVABLE FASTENING DEVICE
Henri Morel, Maule, France, assignor to ITW de France, Val d'Oise, France
Filed Jul. 9, 1979, Ser. No. 55,715
Claims priority, application France, Jul. 10, 1978, 78 20568
Int. Cl.³ F16M *13/00*
U.S. Cl. 248—221.3 6 Claims

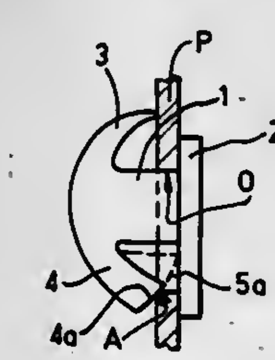

1. A one-piece non-removable fastening device in combination with a predetermined uniform and uninterrupted opening formed in a panel, said fastening device including a head, a body extending from said head and having a solid cross-sectional configuration at its juncture with said head that is substantially identical to said opening, a curved retaining cam extending outwardly laterally from the free end of said body and thence reversely extending upwardly toward said head, the free end of said cam terminating in spaced opposition to a plane lying on the juncture of said head and body, and at least one flexible locking element, a gap formed in said body which enables said locking element to be withdrawn into said gap at the moment of inserting the device into said complementary opening, whereby the device is adapted to withstand, without play, considerable shear loads since a substantially continuous solid span is formed between the body and the edge of said opening except for said gap in said body.

4,301,987
SHELF DISPLAY CLIP
Gerald A. Conway, 3133 Fairfax Rd., Cleveland Heights, Ohio 44118
Filed Dec. 15, 1978, Ser. No. 969,831
Int. Cl.³ F16M *13/00*
U.S. Cl. 248—221.4 6 Claims

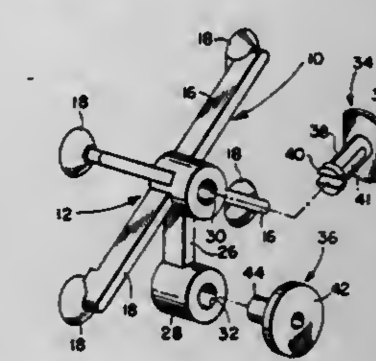

1. A clip for use with a channel, the channel having at least two spaced lips on the face thereof defining opposed grooves, said clip having a center body portion from which radiate at least two, resilient, straight legs forming a V with the body portion at the vertex of the V, the distal ends of which legs are deflectable in a plane substantially parallel to the plane of, and for engagement in at least one of, the opposed grooves, which engaged distal ends are urged by the resilience of said legs into tight engagement with the grooves to aid in securing said clip to the channel, said body portion including means for supporting items therefrom; and wherein said distal ends of said legs have feet rearwardly offset from and integral with said legs, which feet are substantially of frustum shape, the base of each of which feet is roughly parallel to the common plane of the V and is the rearward-most portion of each foot, and said feet are for said engagement of said distal ends with the grooves.

4,301,988
SLIDE STRUCTURE FOR A VEHICLE SEAT AND CORRESPONDING SEAT MOUNT
Roger Parizet, Bonnee, France, assignor to Campagnie Industrielle de Mecanismes en Abrege CII.M., Levallois Perret, France
Filed Oct. 1, 1979, Ser. No. 80,925
Claims priority, application France, Oct. 6, 1978, 78 28642
Int. Cl.³ B60N *1/08*
U.S. Cl. 248—430 10 Claims

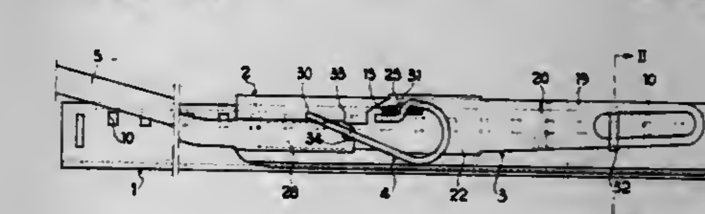

1. A slide structure for a vehicle seat, comprising two slides, one of which slides is cooperable with the other slide to be movable in translation relative to said other slide, a locking lever mounted on one of the slides to be pivotable in a plane between a position for locking the movable slide against translation relative to said other slide and a position for unlocking said movable slide relative to said other slide, elastically yieldable means for biasing the lever toward said locking position, the slide carrying the locking lever having a cut-out tab which is folded over in a direction to be substantially perpendicular to said pivot plane, the lever having an opening through which said tab extends with a clearance which permits the movement of the lever between said two positions.

4,301,989
PIPE WHIP RESTRAINT SYSTEM AND ENERGY ABSORBING DEVICE THEREFOR
Ralph M. Kallenbach, 915 Carol St., Elgin, Ill. 60120
Filed Jun. 29, 1979, Ser. No. 53,373
Int. Cl.³ F16M *13/00*
U.S. Cl. 248—548 **9 Claims**

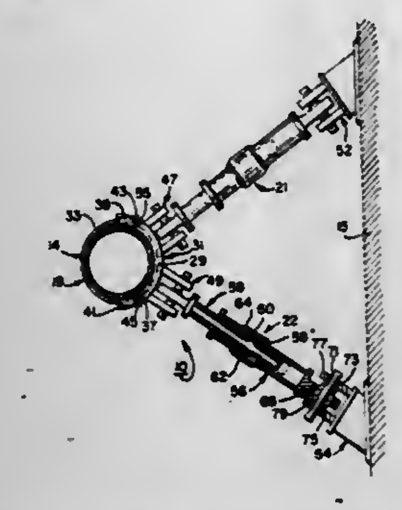

1. In a system for limiting movement of a pipe in the event of rupturing or breaking same, the combination comprising: pipe engageable means disposed at the pipe to be restrained; an energy absorbing device connected at one of its ends to said pipe engageable means and at the opposite end adapted to be anchored to a substantially immovable support structure, a second energy absorbing device connected at one of its ends to said pipe engageable means and at its opposite end being adapted to be anchored to the substantially immovable support structure, said second energy absorbing device being generally similar to the first-mentioned energy absorbing device and extending at an angle thereto radially from said pipe engageable means, one of said pipe engageable means and said devices being arranged for mounting said system relative to the pipe for accommodating free movement of the pipe over a certain distance during normal operating conditions, said devices including a first elongated member having a hollow portion therein, a second member mounted within the hollow portion of said first member, one of said first and second members having its front end fixedly connected to said pipe engageable means and the other one of said members having its rear end adapted to be fixedly connected to the support structure, said first member having a first interference means and said second member having second interference means for engaging forcibly said first interference means and for thereafter continuing relative movement between said first and said second interference means for energy absorbing purposes when the pipe moves forcibly further than the certain distance.

4,301,990
FORMWORK PANEL FOR CONCRETE WALLS WITH WEDGE-TYPE CONNECTIONS
Artur Schwörer, Senden, Fed. Rep. of Germany, assignor to Peri-Werk Artur Schwörer KG, Weissenhorn, Fed. Rep. of Germany
Filed Feb. 27, 1980, Ser. No. 125,269
Claims priority, application Fed. Rep. of Germany, Mar. 3, 1979, 2908339; Jun. 20, 1979, 2924777
Int. Cl.³ E04G *11/06, 17/04*
U.S. Cl. 249—44 **15 Claims**

1. A formwork panel for use in a system for erecting concrete walls employing a plurality of formwork panels, adjacent panels being joined by a connecting bar, each said panel comprising a facing skin carried by a rectangular frame, having at least one cross-strut, said cross-strut being provided with oppositely formed projecting wedges extending laterally outward therefrom and a U-shaped slide member movably carried on said cross-strut, the legs of said U-shaped slide having oppositely extending inwardly directed projecting wedges said inwardly directed projecting wedges cooperating with the laterally extending projecting wedges to form a slidably engag-

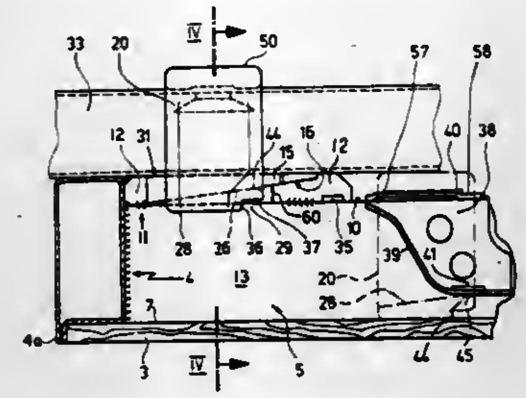

ing wedge coupling for removably securing said connecting bar to said cross strut within said U-shaped slide.

4,301,991
INGOT MOLD ASSEMBLY
William M. Hyams, Beaver, Pa., assignor to Crucible Inc., Pittsburgh, Pa.
Filed Sep. 6, 1979, Ser. No. 72,964
Int. Cl.³ B22D *7/06*
U.S. Cl. 249—174 **9 Claims**

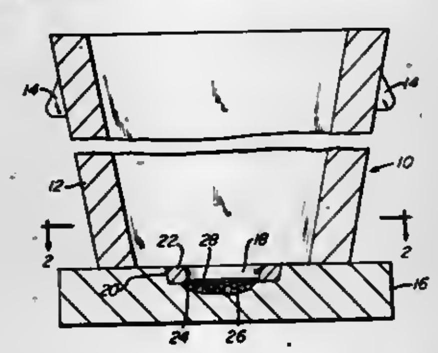

1. An ingot mold assembly for ingot casting including a vertical, open-ended mold removably positioned on a mold stool to enclose a surface area thereof, said mold stool having on said enclosed surface area a relieved portion, said relieved portion having a base with a cavity therein produced by erosion during casting, a quantity of metal particles essentially filling said cavity, a plate positioned within said relieved portion and covering said cavity and metal particles, and means within said relieved portion for securing said plate and for protecting the periphery of said relieved portion from erosion during casting, whereby during casting the plate and metal particles are secured in place and do not mingle with molten metal being cast and the periphery of the relieved portion is protected from erosion.

4,301,992
DIAPHRAGM VALVE
Richard S. Karbo, Newport Beach, Calif., assignor to Hydro-Rain Inc., Laguna Niguel, Calif.
Filed Dec. 6, 1979, Ser. No. 100,935
Int. Cl.³ F16K *31/12, 31/385*
U.S. Cl. 251—46 **10 Claims**

1. A valve comprising:
a valve housing having a passage extending therethrough, said passage having an inlet and an outlet and a longitudinal axis, said housing having a valve seat in said passage, said valve seat defining a plane which forms an acute angle with said axis, and said valve housing having a cavity communicating with said passage;
a movable diaphragm extending across said cavity to define a control chamber on one side of the diaphragm, the other side of the diaphragm communicating with the passage;
control means for varying the pressure in the control chamber to tend to control the position of the diaphragm, said control means including passage means in said valve housing leading to said control chamber;
a diaphragm support having an opening therein;
means for mounting said diaphragm support so that the diaphragm support can at least partially support the diaphragm on said other side of the diaphragm in a predetermined position of the diaphragm;
a valve element;
means for pivotally mounting the valve element on the valve housing for pivotal movement relative to said diaphragm support between a closed position in which the valve

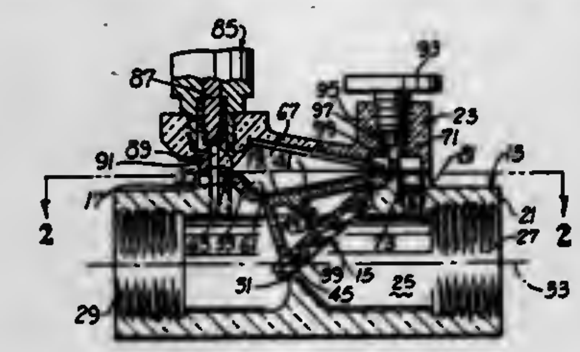

element engages the valve seat to essentially block the flow of fluid through the passage from the inlet to the outlet and an open position in which the valve element is spaced from the valve seat to allow the flow of fluid through the passage from the inlet to the outlet; and
said diaphragm acting through said opening in said diaphragm support to urge the valve element toward the closed position when the pressure in the control chamber is sufficient and said valve element being movable to said open position by fluid from the inlet acting on said valve element when the pressure in the control chamber is reduced by said control means.

4,301,993
GATE VALVE
Henry A. Waller, Woodland Hills, Calif., assignor to Consolidated Controls Corporation, Bethel, Conn.
Filed Oct. 9, 1979, Ser. No. 82,969
Int. Cl.³ F16K *25/00*
U.S. Cl. 251—167 **11 Claims**

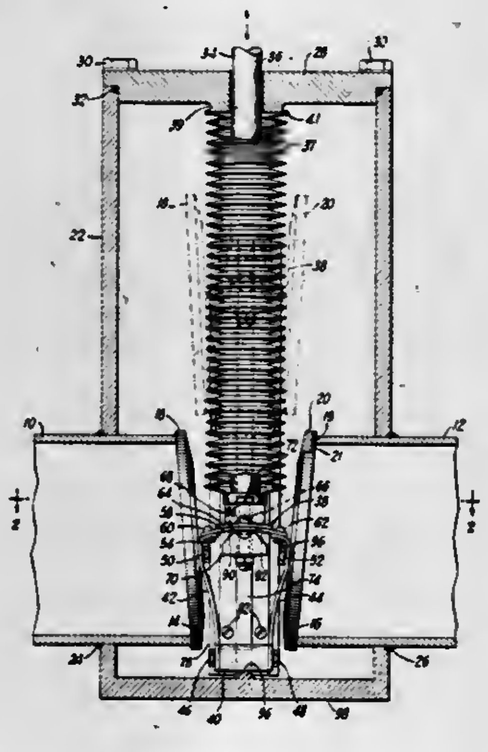

1. A gate valve comprising:
a valve body including a flow passage having a pair of spaced-apart annular valve seats defining a valve chamber therebetween;
a valve gate assembly including a base mounted for transverse movement relative to said passage, a pair of valve discs, and a pair of flat spring flexure elements supporting said discs from said base, said flexure elements normally biasing said discs toward each other so that said assembly can be moved into and out of said chamber without engaging said valve seats,
a normally bowed spring interconnecting said discs, and
means operative after said assembly has been moved to a position in which said discs are aligned with said valve seats for forcing said discs into engagement with said valve seats solely by exerting a force on said bowed spring in the direction to force said discs apart.

4,301,994
BUNDLE CONDUCTOR STRINGING BLOCK
L. E. Lindsey, Pasadena, Calif., assignor to Lindsey Manufacturing Co., Azusa, Calif.
Filed Feb. 4, 1980, Ser. No. 118,115
Int. Cl.³ B66D *1/36*
U.S. Cl. 254—134.3 PA **14 Claims**

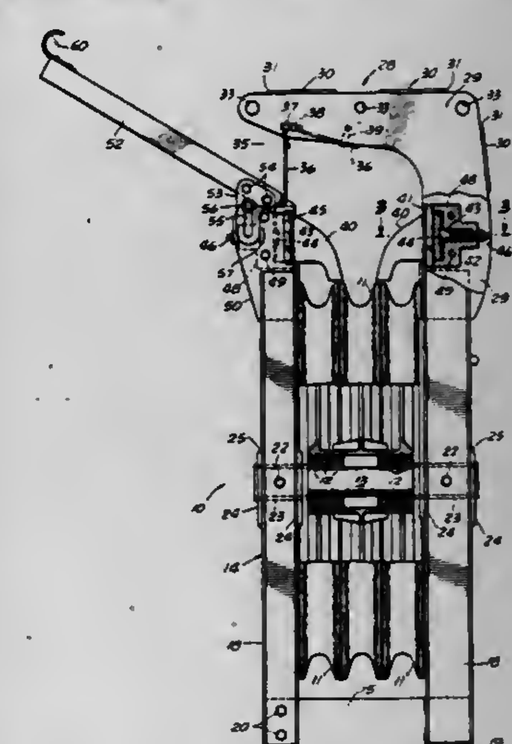

1. A stringing block adapted to be threaded by helicopter for use in stringing bundle power conductors, said block comprising:
a U-shaped frame formed of structural metal members including a bight portion formed by a pair of inwardly facing channel members secured together along their facing edges with the ends thereof sandwiched between upright side frames formed by separate pairs of outwardly facing channel members;
a pair of aligned tubular socket means secured between the midlength portions of said side frames;
a shaft rotatably supporting a plurality of sheaves having its ends seated in and secured to said pair of socket means;
an inverted L-shaped suspension yoke having the lower end of its vertical leg secured to the upper end of one of said side frames and the free end of its horizontal leg extending toward the upper end of the other of said side frames at a level thereabove to provide a passage to receive a tow-line from a helicopter; and
guide horn means extending upwardly and outwardly from the lower side of said tow-line passage.

4,301,995
COUNTER-BALANCED SHEAVE
Shale J. Niskin, 3415 Chase Ave., Miami Beach, Fla. 33140
Continuation of Ser. No. 105,666, Dec. 20, 1979, abandoned, which is a continuation of Ser. No. 27,311, Apr. 5, 1979, abandoned. This application Jan. 7, 1981, Ser. No. 222,970
Int. Cl.³ B66D *1/36*
U.S. Cl. 254—411 **5 Claims**

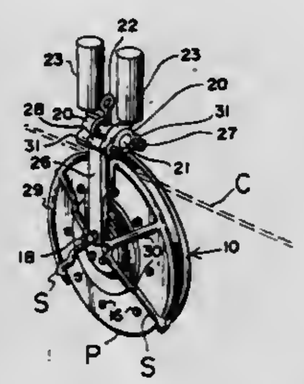

1. A counter-balanced sheave for supporting a downward extending cable having a tension applied thereto with a substantial vertical component, comprising:
a pulley having a periphery and an axis of rotation, said pulley constructed to lie in a plane having a substantial vertical component;
a pair of support arms, each extending downward on either side of said pulley and having at one end means for rotatably mounting said pulley at said axis of rotation;
hinge means including a pair of end portions defining a pair of arcuate sleeves which are coaxially aligned, a shaft portion extending through each of said arcuate sleeves and operable for pivotal movement about its longitudinal axis, and attachment means for connecting each of said end portions to said pair of support arms at an end of each said support arm which is opposite to the end having said means for mounting said pulley;
suspension means pivotally secured to said shaft portion with its pivotal axis being substantially perpendicular to said longitudinal axis of said shaft portion; and
counter-balancing means comprising a pair of substantially equal weighted members positioned to extend above said pulley and mounted to said end portions on opposite sides of said suspension means,
whereby said pulley will lie in a plane passing through said cable being payed through said pulley at all times.

4,301,996
SNAKE GUARD
Hugh K. Holyoak, Rte. 1, Alapaha, Ga. 31622
Filed Jun. 25, 1979, Ser. No. 51,791
Int. Cl.³ E04H *17/00*
U.S. Cl. 256—1 **2 Claims**

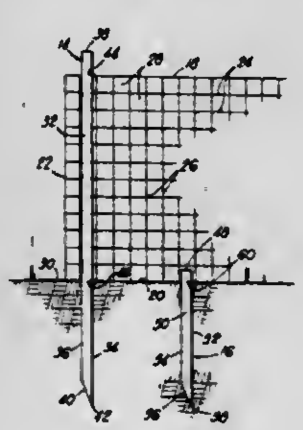

1. Apparatus for protecting an area from intrusion by a snake, comprising:
(a) a length of flexible netting; and
(b) means for supporting said netting from the ground in an upward direction across the expected path of movement of said snake into said area, said netting having a mesh of sufficient size so as to allow only a limited amount of the forward portion of said snake to pass therethrough and said netting being constructed of fabric of sufficient thickness so as to be wedged between some of the overlapping scales on said reptile when said reptile attempts to extricate itself from said netting, said support means includes a plurality of elongated posts, each post having a vertical exterior surface, a bottom and a top, said bottom being capable of being implanted in the ground to present said post in an upwardly extending attitude and means for attaching said netting to said post, said attaching means includes a first slot laterally extending through said vertical exterior surface adjacent said top end, and being angled downwardly and a second slot laterally extending through said vertical exterior surface and spaced below said first slot, said second slot being upwardly directed, said first and second slots dimensioned to receive said fabric therein.

4,301,997
CONTINUOUS COPPER MELTING FURNACE
Milton E. Berry, and Ronald L. Pariani, both of Carrollton, Ga., assignors to Southwire Company, Carrollton, Ga.
Filed Jun. 30, 1978, Ser. No. 921,038
Int. Cl.³ C21C *5/42*
U.S. Cl. 266—236 **18 Claims**

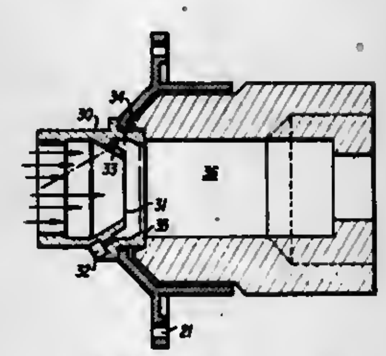

1. In a vertical shaft furnace for continuously melting pieces of copper metal, said furnace being of the type having a refractory lined wall enclosing a melting chamber, a plurality of burners affixed to said wall for injecting heat into said metal pieces, and an outlet in the bottom of said chamber for continuously discharging molten copper, the improvement comprising:
(a) a plurality of mixing means for variably combining fuel and air remotely from the burners;
(b) a plurality of manifold means for delivery of said fuel and air mixture to
(c) means for burning a premixed combustible gaseous mixture of fuel and air comprising a plurality of refractory tunnel burners of the flame retention type wherein said burners include a refractory tile combustion chamber of generally cylindrical cross-section; and
(d) wherein each manifold means supplies relatively few burners, said arrangement comprising anti-backfire means; and
(e) wherein the proportion of the mixing means to the aforesaid manifold means is one mixer means per manifold means.

4,301,998
VERTICAL GUNNING APPARATUS WITH TELEVISION MONITOR
Jack L. Rodway, Vienna, Ohio, assignor to Pfizer Inc., New York, N.Y.
Filed Apr. 25, 1980, Ser. No. 143,952
Int. Cl.³ C21B *7/04*
U.S. Cl. 266—281 **9 Claims**

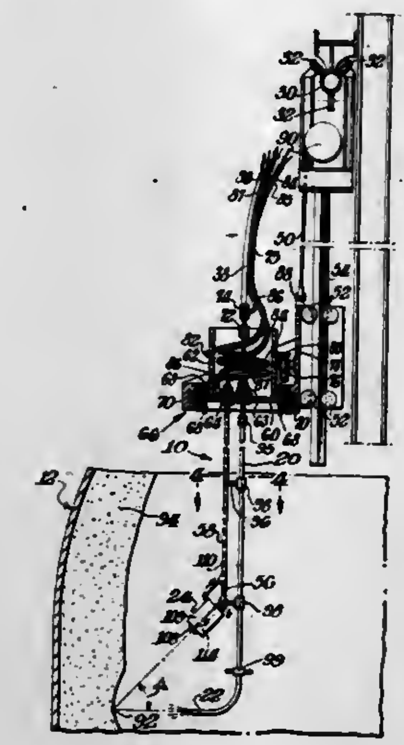

1. A remote control gunning apparatus for repairing the refractory lining of a metallurgical vessel in the vertical position at elevated temperature, said apparatus comprising in combination
a rotatable vertical gunning conduit terminating at its lower extremity in a nozzle,
swivel coupling means for supplying a fluidized stream of particulate refractory under pressure to said conduit,
positioning means for moving said conduit horizontally and vertically to position said nozzle inside said vessel adjacent a lining area to be repaired,
means for rotating said conduit to aim said refractory stream from said nozzle at said area,
a television camera attached to said conduit proximate to said nozzle for televising the interior of said vessel to detect said area and to monitor the repair thereof, the axis of said camera being canted to substantially converge with the axis of said nozzle at said area, said camera being mounted in a jacket, said camera jacket being provided with a transparent heat-resistant port in the line of sight of the lens of said camera,
a generally vertical elongated water inlet conduit communicating with said camera jacket and connected to a source of water for circulating water throughout the interior of said camera jacket to maintain said camera cool,
an elongated water outlet conduit generally parallel to and along side of said water inlet conduit and communicating with said camera jacket for discharging heated water from said interior of said camera jacket,
an electrical conduit longitudinally disposed in one of said water conduits for supplying power to said camera for transmitting a televised signal from said camera to a monitor outside said vessel, and
an air conduit, a substantial portion of which is longitudinally disposed in the other of said water conduits, communicating with said port for supplying pressurized air to said port to cool and clean said port.

4,301,999
VACUUM HOLD-DOWN TABLE FOR AN AUTOMATICALLY CONTROLLED SYSTEM FOR WORKING ON SHEET MATERIAL
Bobby L. Higgins, Dallas, and James A. Mann, Jr., Richardson, both of Tex., assignors to Camsco, Inc., Richardson, Tex.
Filed Sep. 10, 1979, Ser. No. 73,863
Int. Cl.³ B25B *11/00*
U.S. Cl. 269—21 **7 Claims**

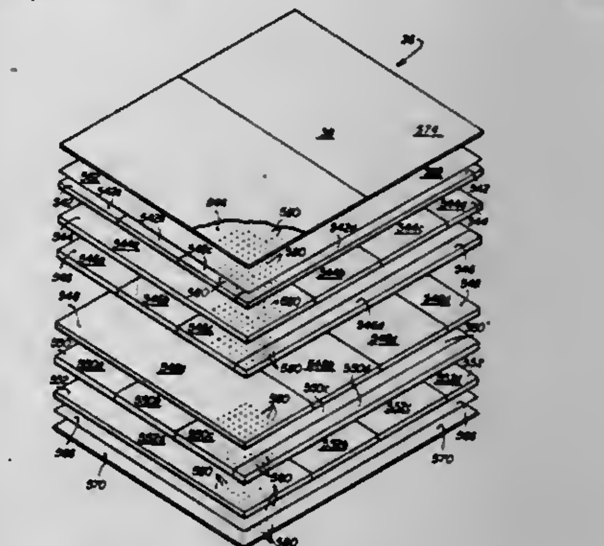

1. A vacuum hold-down table for holding sheet material in place comprising:
a plurality of layers united to form a laminated monolithic core portion for the table wherein said core portion has top and bottom surfaces;
a plurality of apertures extending throughout said core portion, such that air flows throughout said core portion;
a layer of relatively low porosity material disposed adjacent said top surface of said core portion;
a first layer of rigid material being disposed between said top surface of said core portion and said layer of relatively low porosity;
a plurality of apertures extending throughout said first layer of rigid material;
a vacuum source; and
means for applying said vacuum source to said core portion to effect a vacuum within said core portion to thereby produce a predetermined flow rate of air passing through said plurality of apertures and a high differential pressure to maintain the sheet material in place on the surface of the table.

4,302,000
APPARATUS FOR SEPARATING A LETTER STACK
Werner Frank, Reichenau, Fed. Rep. of Germany, assignor to Licentia Patent-Verwaltungs-G.m.b.H., Frankfurt am Main, Fed. Rep. of Germany
Filed Nov. 28, 1979, Ser. No. 97,912
Claims priority, application Fed. Rep. of Germany, Nov. 29, 1978, 2851545
Int. Cl.³ B65H *1/02, 1/14, 1/24*
U.S. Cl. 271—150 **5 Claims**

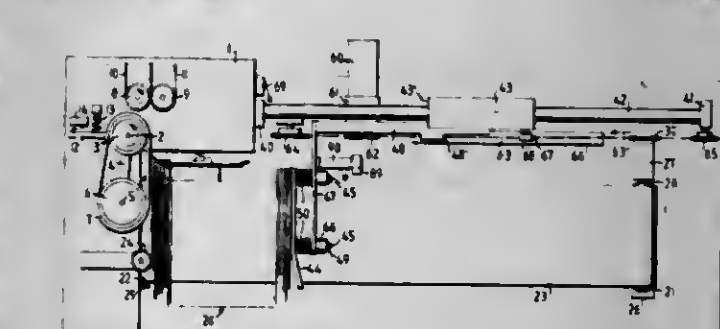

5. In apparatus for the separate discharge of letters and

similar flat items from a stack of such items, which apparatus includes a movable support for supporting the stack of items, a withdrawal mechanism mounted to engage the foremost item in the stack and withdraw that item from the stack, means defining a supporting wall manually movable into an initial position for supporting the trailing end of the stack, and drive means connected to drive the supporting wall toward the withdrawal mechanism under control of the state of a switch actuated in dependence upon the force being exerted by the stack on the withdrawal mechanism, the improvement comprising resilient force equalizing means between said drive means and said supporting wall in drive transmitting relation therebetween, said equalizing means being constructed and mounted for permitting advancing movement of said supporting wall to lag behind that corresponding to the sum of the drive movements produced by said drive means whenever the pressing force between said supporting wall and the stack exceeds a given value, and a supplemental switch mounted to be switched in response to movement of said drive means and connected electrically to said drive means for deactuating said drive means when said supporting wall reaches a position relative to said drive means corresponding substantially to the maximum permissible lag of said supporting wall relative to the sum of advancing movements produced by said drive means.

4,302,001
DEVICE FOR FORMING A SEQUENCE OF UNDERLAPPING SHEETS
Rudolf Liepert, Augsburg, Fed. Rep. of Germany, assignor to Georg Spiess GmbH, Gersthofen, Fed. Rep. of Germany
Filed Dec. 14, 1979, Ser. No. 103,697
Claims priority, application Fed. Rep. of Germany, Jan. 23, 1979, 2902447
Int. Cl.³ B65H *29/66, 29/68*
U.S. Cl. 271—183 **8 Claims**

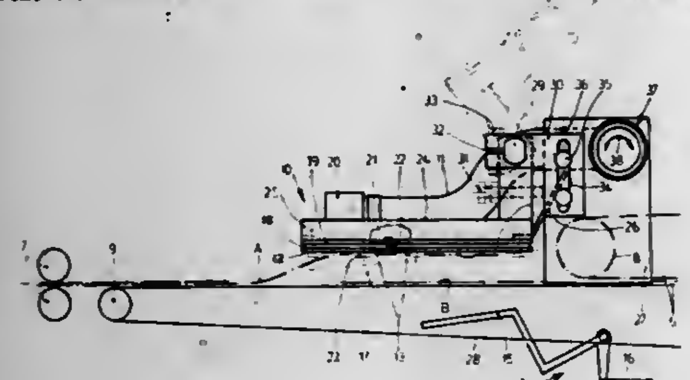

1. Device for forming a sequence of underlapping sheets when conveying sheets that are cut off a paper web by a sheeter arranged before, to the feed table of a machine working these sheets, comprising: suction means arranged above the sheet web in the area between two draw-off equipments that are driven with different feed rates, lifting means arranged below the sheet web and bringing the rear zone of every sheet into action with said suction means to form a guide gap for the following sheet, said suction means having a suction box connected to a vacuum supply means and adjusted stationary during operation, said suction box being bounded at the bottom by a punched plate having a width corresponding at least to the maximum workable sheet width, a supporting frame attached to said suction box above said web, said supporting frame being mounted pivotably and adjustable in height, said suction box having said punched plate and an auxiliary plate spaced from said punched plate, said punched plate being a lower plate and said auxiliary plate being an upper plate, said punched plate having a hole density which decreases in direction of transport of the sheets, said upper auxiliary plate having vacuum connection means and a circumferential packing at the rim of said auxiliary plate, said lower plate being spaced from said auxiliary plate by the region enclosed by said packing.

4,302,002
SHEET TRANSPORTATION BELT APPARATUS
Hideo Hashimoto, Yokohama, Japan, assignor to Ricoh Company, Ltd., Tokyo, Japan
Filed Jul. 5, 1979, Ser. No. 54,708
Claims priority, application Japan, Jul. 14, 1978, 53-97790
Int. Cl.³ B65H *5/02, 5/06*
U.S. Cl. 271—272 **4 Claims**

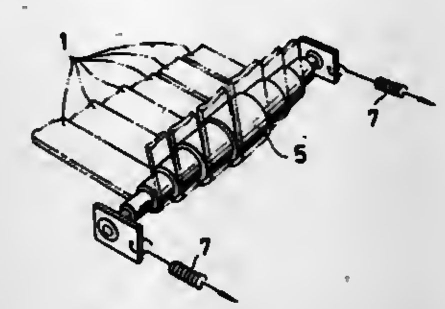

1. In a sheet transportation apparatus comprising:
a plurality of juxtaposed transportation belts trained over a plurality of guide rollers and a cylindrical member for transporting sheets between said juxtaposed transportation belts and said cylindrical member, the improvement comprising tension gradient application means for applying a different tension to each of said transportation belts in such manner that the greatest tension is applied to the central transportation belts and, in the direction from the center to each side portion of said juxtaposed transportation belts, the tension applied to said transportation belts is decreased, wherein said tension gradient application means comprises at least one roller member which constitutes one of said guide rollers and which has a plurality of discrete portions each having a diameter different from the adjacent portions, said diameters being decreased in the direction from the central portion to each end portion of said roller member, and said juxtaposed transportation belts each being substantially the same in length, thickness, width and material.

4,302,003
WATER TOY
Thomas V. Hughes, 905 Hedlund Ct., San Jose, Calif. 95123
Filed Aug. 13, 1979, Ser. No. 66,287
Int. Cl.³ A63G *19/00*
U.S. Cl. 272—1 B **6 Claims**

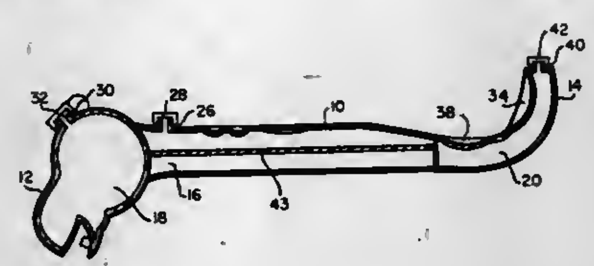

1. A water toy comprising
an elongated, hollow, rigid body having a fixed internal volume, said body being constructed of a non-expansile thermoplastic material and having a head section provided with a first fill hole, a middle section provided with a second fill hole, and a tail section provided with a third fill hole, where said head section is configured to resemble the head of an animal,
a first impermeable barrier attached within said body,
a second impermeable barrier attached within said body and spaced from said first impermeable barrier, said first barrier and said second barrier dividing said fixed internal volume into three independent chambers including a head section chamber, a middle section chamber, and a tail section chamber,

a first closure means associated with said first fill hole for selectively sealing and unsealing said head section chamber,
a second closure means associated with said second fill hole for selectively sealing and unsealing said middle section chamber, and
a third closure means associated with said third fill hole for selectively sealing and unsealing said tail section chamber,
whereby each of said three chambers can be individually filled with and depleted of water through said fill holes so that when said water toy is disposed within a large body of water the nature of the ride may be modified.

4,302,004
MOBILE AMUSEMENT RIDE
William C. Deem; Robert Esposito; Laurence L. Littler, and Robert S. Sullivan, all of Jacksonville, Ill., assignors to Eli Bridge Co Inc, Jacksonville, Ill.
Filed Feb. 26, 1979, Ser. No. 16,130
Int. Cl.³ A63G *1/26*
U.S. Cl. 272—29 **14 Claims**

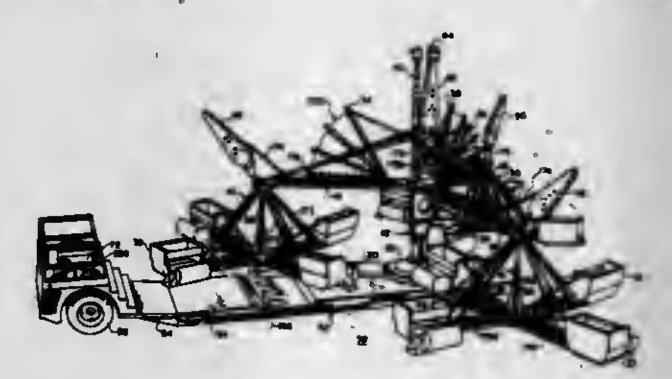

1. In an amusement ride the combination of
a mobile base member;
a mast member vertically support on a rotatable axis from sad base member;
three pairs of upper and lower vertically oriented sweeps extending radially from said mast member;
a rotatable substantially vertical unit pole supported at the extended ends of each of said three pairs of sweeps;
two pairs of diametrically opposite seat sweeps extending from the bottom of each of said unit poles in substantially equal circumferential spacing;
a passenger seat removably attached to the ends of each of said seat sweeps in substantially balanced relationship;
said vertically oriented sweeps being longer than said seat sweeps whereby said passenger seats upon rotation about said unit poles pass in spaced relationship with said mast member;
two of said pairs of vertically oriented sweeps being rotatably mounted from said mast member at vertical axes;
a pair of opposite sweeps on each of said unit poles being foldable upwardly and inwardly to a position adjacent said unit poles;
whereby, upon removing the seats from said pair of opposite seat sweeps and folding the respective seat sweeps to said inward position, said two pairs of rotatable sweeps are positionable to and from ride positions and to and from a transport position with said unfolded seat sweeps oriented about their unit poles in substantially parallel contiguous relationship on each side of said third pair of upper and lower sweeps.

4,302,005
LATERALLY PIVOTED WEIGHT TRAINING DEVICE
Ira J. Silberman, Opelika, Ala., assignor to Diversified Products Corporation, Opelika, Ala.
Filed Mar. 13, 1979, Ser. No. 20,214
Int. Cl.³ A63B *23/00*
U.S. Cl. 272—94 **17 Claims**

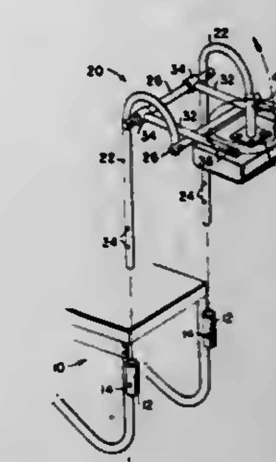

1. An exercising device for use with interchangeable weights of selected quantity comprising:
an inverted, generally J-shaped frame having a generally upstanding lower portion and a generally arched upper portion joined at one end to said lower portion along a back side of said frame and having a free opposite end, said frame being adapted to be supported in a stationary position relative to a user-supporting surface;
weight support means pivoted to said back side of said frame and extending laterally therefrom for pivotal movement about a substantially horizontal axis, said weight support means being adapted to support weights of selected quantity and including a user-engageable lower lifting surface against which a generally upward exercising force is applied to pivot said weight support means about said axis and raise the weight supported thereon; and
stop means carried by said frame at said free end of said upper portion for engaging and supporting the laterally extending portion of said weight support means in a lowest rest position wherein the weights are disposed substantially laterally of the vertical plane containing said axis.

4,302,006
RECREATIONAL DEVICE
Robert N. Johnson, 4 Gilchrist Rd., Townsend, Mass. 01469
Filed Jul. 15, 1980, Ser. No. 169,045
Int. Cl.³ A63B *19/02*
U.S. Cl. 272—115 **9 Claims**

1. A recreational device comprising:
an outer ring shaped member;
an inner ring mounted for rotation within said outer ring;
a platform adapted to support an individual within said inner ring, said platform being pivotally mounted to said inner ring;
a stabilizer adapted to rest in one position on the ground and extend aft of said inner and outer rings, said stabilizer

coupled to said platform such that said stabilizer moves in the same direction as the aft portion of said platform; and,

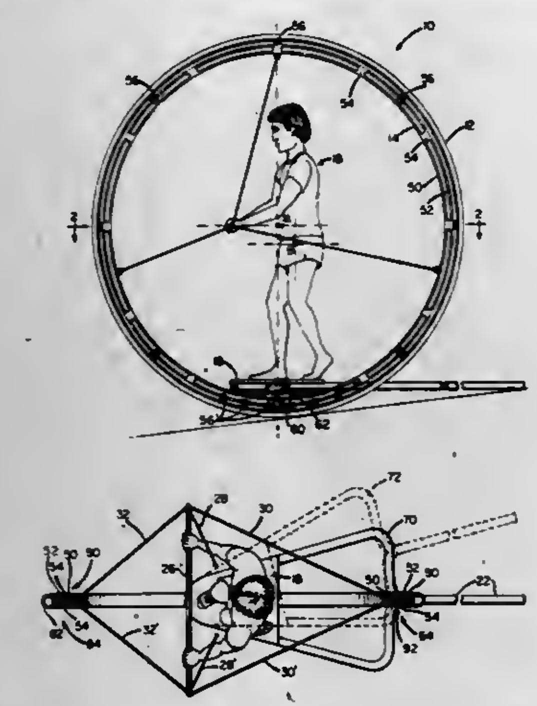

means secured to said inner ring and adapted to be grasped by said individual for enabling said individual to apply a torque to said inner ring.

4,302,007
SWIMMER'S DRAG PRODUCING BELT
George Oprean, 26 Chili Ave., Scottsville, N.Y. 14546, and James E. Counsilman, 2606 E. Second St., Bloomington, Ind. 47401
Filed Jan. 19, 1979, Ser. No. 4,902
Int. Cl.[3] A63B *21/26*
U.S. Cl. 272—116 **3 Claims**

1. A drag creating device for a swimmer training for competition, the device being adapted to be worn around the swimmer's waist and comprising a belt member having adjustable means for securing its ends together, and a plurality of cup-like drag creating pockets, each having a front and a back, said pockets secured to the belt, the upper ends of said pockets being normally open, the pockets being made of cloth having a multiplicity of small openings therein, the upper edge of each pocket adjacent its open upper end having elastic, resilient means for normally holding the pocket in an open, uncollapsed condition, a portion of each said pocket upper edge being secured to the belt so that the pocket operates as a scoop when the swimmer moves through the water, the elastic, resilient means at the upper edge of each pocket permitting the pocket to collapse on turns or if hit by the swimmer's arm, the bottom edge of each pocket being closed, the pockets being arranged on the belt so that there is at least one pocket on the front and at least one pocket on the back of the swimmer.

4,302,008
DEVICE FOR IMPROVING PHYSICAL FITNESS
Charles W. Lard, 35 Ridgewood Rd., West Hartford, Conn. 06107
Filed Dec. 5, 1979, Ser. No. 100,525
Int. Cl.[3] A63B *23/00*
U.S. Cl. 272—117 **5 Claims**

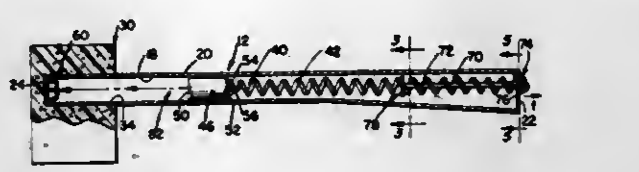

1. Physical fitness training means comprising a weight swinging device for physical fitness training having an elongated handle with a longitudinally extending bore and adapted to be held at one end of the handle for swinging the device, an impact head mounted on the other end of the handle for being swung with the handle, a weighting system comprising a weight reciprocable within said bore and shiftable in one direction toward the impact head by swinging the device, and yieldable means within said handle bore attaching said weight to said handle to restrain movement of the weight in said one direction when the device is swung, a bell mounted in said bore operable for signalling when said weight has shifted a predetermined distance in said one direction, and adjusting means connected to said yieldable means for controlling the amount of force required to shift the weight said predetermined distance in said one direction for controlling the required swinging rate, and therefore the associated level of physical fitness training, for operating the bell.

4,302,009
AUTOMATIC LIFT OFF WEIGHT RACK FOR BARBELLS
Samuel O. Johnson, 502 Fair Rd., Statesboro, Ga. 30458
Filed May 8, 1980, Ser. No. 147,915
Int. Cl.[3] A63B *13/00*
U.S. Cl. 272—123 **5 Claims**

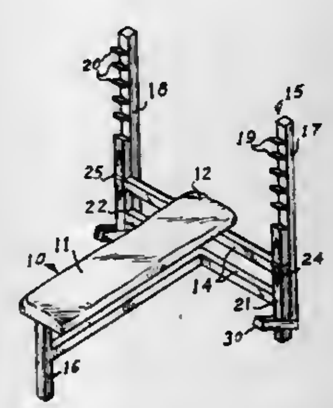

1. A barbell rack for receiving a barbell preparatory to lifting, said rack including a standard having a lifting position and a storage position, support means for supporting said standard, hinge means for pivotally fixing said standard to said support means, and stop means for limiting pivotal motion of said standard with respect to said support means, said standard further including shelf means for supporting a barbell on said standard, said storage position being a position wherein said standard is generally vertical and a barbell carried thereby biases said standard towards said storage position, and said lifting position being a position wherein said standard is tilted and a barbell carried thereby biases said standard towards said lifting position.

4,302,010
ELECTRONIC BOWLING SCORING SYSTEM WITH VIDEO COMMUNICATION INTERFACE BETWEEN MANAGER CONSOLE AND LANE SCORE CONSOLES
Reginald A. Kaenel, Weston, Conn., assignor to AMF Incorporated, White Plains, N.Y.
Continuation of Ser. No. 764,366, Jan. 31, 1977, abandoned. This application May 24, 1979, Ser. No. 42,380
Int. Cl.[3] A63D *5/04*
U.S. Cl. 273—54 C **12 Claims**

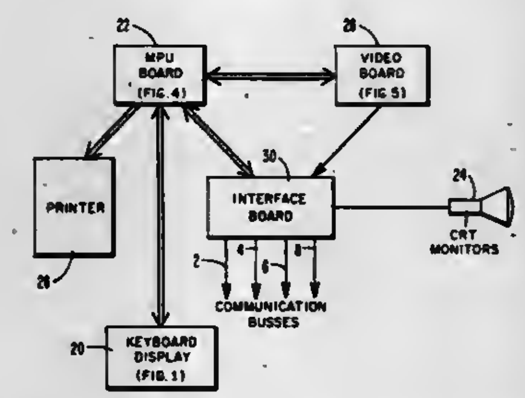

1. In an automatic bowling scoring system for use with a plurality of bowling lanes wherein a manager's console unit is employed for asserting selective control over at least a video display portion of the scoring system, the combination comprising
- a manager's console unit,
- a plurality of lane score console units,
- each of said console units comprising a keyboard for providing input information, memory means coupled to said keyboard for storing at least bowler, lane, and game information, a processing unit coupled to said memory means for processing at least said input and stored information, a CRT monitor for displaying at least bowler identification, lane, and game score information, and a video display controller coupled to said memory means and said CRT monitor for controlling information displayed on said monitor,
- a plurality of communication buses for connecting said manager's console and said lane score console units in parallel,
- an interface unit for each said manager's console and lane score console units for selectively connecting the video display controller of each one of said lane score console and manager's console units to its respective CRT monitor and to said communication buses,
- each one of said interface units being operable in response to command signals from the manager's console unit to selectively cause display at its respective console unit of video information coupled from its respective console unit or coupled from at least one other of said console units that it is connected to over said buses.

4,302,011
VIDEO GAME APPARATUS AND METHOD
William Pepper, Jr., Bethesda, Md., assignor to Peptek, Incorporated, Bethesda, Md.
Division of Ser. No. 850,741, Nov. 11, 1977, Pat. No. 4,129,747, and a continuation-in-part of Ser. No. 717,192, Aug. 24, 1976, Pat. No. 4,071,691, and a continuation-in-part of Ser. No. 759,931, Jan. 17, 1977, abandoned, and Ser. No. 867,256, Jan. 5, 1978, Pat. No. 4,198,539. This application Jan. 30, 1978, Ser. No. 873,568
The portion of the term of this patent subsequent to Jan. 23, 1995, has been disclaimed.
Int. Cl.[3] A63F *9/00*
U.S. Cl. 273—85 G **11 Claims**

1. In a video game system having an electronic display, electronic game generator means for generating control signals for said visual display according to the game being played, at least one player controlled signal generator, said electronic game generator means having at least one player controlled signal input means for receiving control signals from said player controlled signal generator, the improvement comprising;
- at least one player touchable surface,
- electric means for exciting said surface from pairs of orthogonally oriented edges thereof so as to produce a position signal field which varies linearly in a given parameter as a function of distance from one of said edges so that a player's finger on said at least one player touchable surface generates a position signal therefrom,
- means for detecting said position signal generated by the player's finger and applying same to said at least one player controlled signal input means of said electronic game generator.

6. In an electronic game method having a video screen on

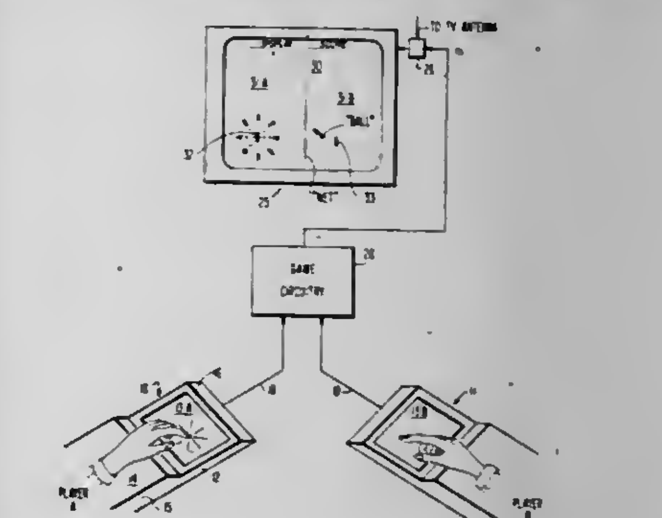

which a primary playing area simulation is electronically produced with related player controlled game elements pictorially shown on said video screen, and player controlled means coupled to electrical circuits for producing coordinates of position for said player controlled game elements, the improvement comprising:
- providing a secondary playing area simulation in the form of a player finger touchable impedance surface, said player finger touchable impedance surface having at least one reference edge and producing an electrical signal upon being touched which signal is proportional to the distance of the position touched from said reference edge of said secondary playing area simulation, and
- controlling the position of said game element in accordance with the coordinates of position of the player's finger on said secondary playing area simulation.

4,302,012
ROTARY GAMEBOARD WITH REMOVABLE COMPARTMENTS
Augustine Di Giovanni, and Gloria Di Giovanni, both of 98 Union Ave., Amityville, N.Y. 11701
Filed Feb. 25, 1980, Ser. No. 124,304
Int. Cl.[3] A63F *1/06*
U.S. Cl. 273—148 R **1 Claim**

1. A game comprising a gameboard having a stationary pedestal adapted for placement on a support surface; a solid circular platform having a playing surface on one side thereof; a central circular hole formed entirely through said platform, and spaced apart uniform satellite holes smaller than said central hole, peripherally located around said central circular hole, lying on a concentric circle and also formed entirely through said platform; a central compartment removably received in said central hole and a plurality of uniform satellite compartments respectively received in said satellite holes, said compartments extending downward only part way into their respective holes; said pedestal having an upper portion which is larger than said central hole and smaller than said concentric circle so as to support said platform thereabout, said upper

portion being an upwardly extending annular ring having a circular recess formed therein on the uppermost surface thereof; said platform having a bottom portion, said bottom portion being larger than said central hole and smaller than said concentric circle and being a downwardly extending annular ring having a circular recess formed therein on the lowermost surface thereof; a set of ball bearings positioned between said upper portion of said pedestal and said bottom portion of said platform, said set of ball bearings being received in said recesses of said upper and bottom portions so that said platform may rotate relative to said pedestal; each of said

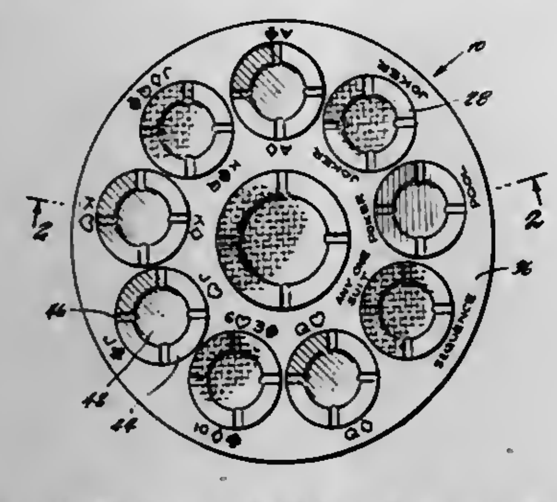

plurality of satellite compartments having a central cup section and a lateral peripheral flange formed about the upper edge thereof, said flange resting upon the top playing surface of said platform and said central cup section extending downwardly into a respective one of said satellite holes, said flange having at least one groove formed therein on the top surface thereof for receiving a cigarette, said central cup and flange being removably mounted in its respective satellite hole, whereby the platform and its playing surface may be rotated by a player or players for easy access to a particular one of the satellite compartments.

4,302,013
PUZZLE ASSEMBLY AND DISPLAY APPARATUS
George Kavis, 355 E. 146th St., Harvey, Ill. 60426
Filed May 23, 1980, Ser. No. 152,771
Int. Cl.³ A63F *9/10*
U.S. Cl. 273—157 R **9 Claims**

1. An apparatus useful for assembling and displaying at least one jig-saw puzzle comprising; storage tray means capable of storing unfitted pieces of said jig-saw puzzle; assembly tray means located in spaced relation to said storage tray means and having a surface on which said jig-saw puzzle is assembled; said surface having a plurality of perforations so that stop means may be inserted therein to prevent said assembled puzzle from moving along said surface; display tray means being at least partially transparent to allow said assembled puzzle to be displayed and being located in spaced relation to said assembly tray means so as to be capable of cooperating with said stop means in said perforations to effectively immobilize said assembled puzzle, and fastening means to hold said storage tray means, said assembly tray means and said display tray means together.

4,302,014
GOLF TRAINING DEVICE
Michael S. Shull, 2570 N. Kentucky Ave., Evansville, Ind. 47711
Filed Apr. 21, 1980, Ser. No. 142,037
Int. Cl.³ A63B *69/36*
U.S. Cl. 273—183 B **6 Claims**

1. A golf training device serving head movement limiting purposes comprising a head receiving portion, an arm supporting said head receiving portion, and a vertical support mounted on a base positioning said arm, said head receiving portion defined as a lightweight flexible band secured around and selective to the size of the head of the trainee and releasable therefrom upon excessive head movement, a rotatable plate mounted at the end of said arm, and metal segments interconnecting said rotatable plate and said lightweight flexible band controlling movement of said head of said trainee, said rotatable plate having a series of openings and said lightweight flexible band having a series of loops interconnected by said metal segments.

4,302,015
CARD CONTROLLED ALIGNMENT GAME
Dale A. Bowser, 4525 S. Yukon, Tulsa, Okla. 74107, and Gordon L. Howard, 8425 N. 121 E Ave., Owasso, Okla. 74055
Filed Jan. 24, 1980, Ser. No. 114,754
Int. Cl.³ A63F *3/00*
U.S. Cl. 273—271 **4 Claims**

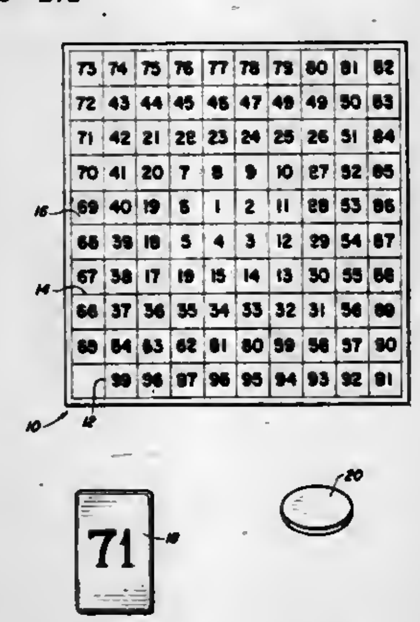

1. A board-type game comprising a game board having a plurality of playing areas inscribed thereon, individual non-repeating identifying numerals imprinted on the playing areas and arranged in a logical sequence in concentrically increasing numerical patterns on the playing areas, a plurality of playing cards individually corresponding in number with the playing areas and independently identified in accordance with each of the identifying numerals of the playing areas, and a set of identifiable playing tokens provided for each game player and adapted for selective disposition by the respective players on the playing areas as selected by the corresponding nature between the playing areas and playing cards.

4,302,016
COMMUNITY DEVELOPMENT EDUCATIONAL APPARATUS
Brian Astle, 22 Fieldstone Rd., Princeton Junction, N.J. 08550, and P. Christopher J. Gallagher, 107 Kingsway Commons, Princeton, N.J. 08540
Continuation-in-part of Ser. No. 776,476, Mar. 10, 1977, abandoned. This application Mar. 13, 1979, Ser. No. 20,183
Int. Cl.³ A63F *3/00*
U.S. Cl. 273—278 **5 Claims**

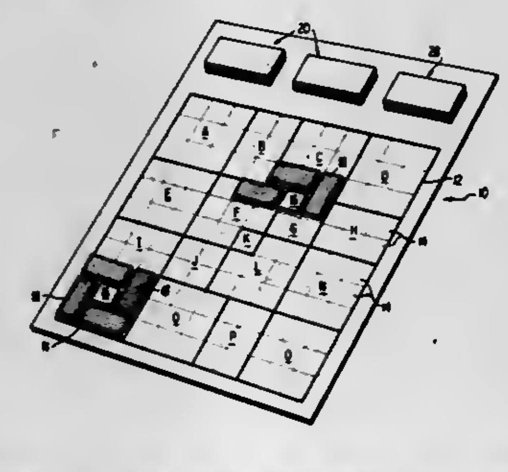

1. A method of playing a board game for a plurality of players which comprises the steps of:
(a) providing a board having a perimeter defined thereon and divided into multiple parcels having different designations to constitute distinguishable groups, each parcel containing at least one uniform area representing a land unit and providing a supply of script money;
(b) each of said players selecting a different parcel;
(c) providing a plurality of distinctive markers representing building structures for selective positional association with said uniform areas, said distinctive markers divided into a plurality of groups;
(d) each of said players purchasing said markers for placement on previously acquired parcels;
(e) selectively positioning purchased markers on one or more of the said uniform areas in one or more of the previously purchased parcels during a player's turn in either a contiguous or noncontiguous relationship to permit maximization of different types of markers in juxtaposed position;
(f) selecting by chance a player-action-valuation item from a plurality of card packs, one set containing title cards having data thereon expressing values applicable for the acquisition of said parcels, one set containing action cards having data thereon containing conditions for determining income, expense and various business activities for said parcels and marker-denoted improvements, and one set identifying successive time periods corresponding to years, upon the drawing of at least some of the action cards, performing the step of distributing script money to a player, the amount of script money distributed being a function of the number of dissimilar building structures currently owned by that player placed contiguously to each other, such that a greater number of dissimilar building structures placed contiguously yields a distribution of a larger amount of script money;
(g) repeating steps (d) through (f) until a time period defining means comprising an end of year card randomly dispersed and visually non-ascertainable within said action cards is drawn to determine completion of a particular time period; and
(h) repeating steps (d) through (g) for a preselected number of time periods.

4,302,017
BALL THROWING AND CATCHING DEVICE
Cesar S. Huqueriza, 658 Moana Way, Pacifica, Calif. 94044
Filed Apr. 28, 1980, Ser. No. 144,235
Int. Cl.³ A63B *65/12*
U.S. Cl. 273—323 **10 Claims**

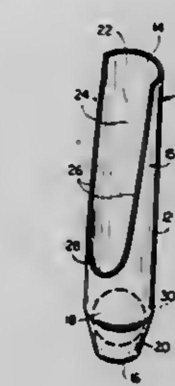

1. A ball game device for hurling and catching a ball comprising a hollow, upright, relatively rigid, substantially cylindrical body member having an open end, a closed end wall, a side wall, said side wall having an upper portion terminating in the form of an arcuate edge and a lower portion adjacent said end wall, the front portion of said side wall comprising two downwardly extending symmetrical slopping edges, the outer surface of said lower portion of said side wall defining a hand-holding area of said device, said body member having an elongated opening in said side wall, said opening extending lengthwise over a major portion of said side wall from said arcuate edge of the upper portion of said side wall to the upper edge of said hand-holding area, wherein the inner surface of said side wall defines a rolling passageway for said ball in said device.

4,302,018
PACKER ARRANGEMENTS FOR OIL WELLS AND THE LIKE
Andrew C. Harvey, Waltham, and David H. McFadden, Brookline, both of Mass., assignors to Foster-Miller Associates, Inc., Waltham, Mass.
Filed Feb. 29, 1980, Ser. No. 125,981
Int. Cl.³ F16J *15/46*
U.S. Cl. 277—27 **11 Claims**

1. A packer for use in an oil well system or the like comprising
a body for disposition in an elongated tubular casing,
an annular recess in said body, said recess having a circumferential opening that extends entirely around the peripheral outer surface of said body,
a metal ring disposed entirely within said recess, said ring being of ductile material and having an outer peripheral surface for sealing engagement with the casing wall and an inner peripheral surface, and
a port in said recess for flowing hydraulic fluid into said recess to apply pressure to the inner peripheral surface of

said metal ring to expand said ring radially outwardly and force said outer peripheral surface through said circumferential opening and into annular sealing engagement with the opposed surface of said casing.

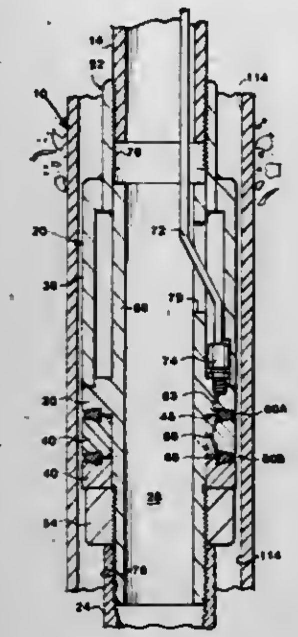

4,302,019
LABYRINTHINE MECHANICAL SEAL

Karl Hotger, Bochum, Fed. Rep. of Germany, assignor to Eickhoff Maschinenfabrik and Eisengiesserei m.b.H, Bochum, Fed. Rep. of Germany

Filed Feb. 5, 1980, Ser. No. 118,831

Claims priority, application Fed. Rep. of Germany, Feb. 8, 1979, 2904739

Int. Cl.³ F16J *15/16, 15/44*

U.S. Cl. 277—56 6 Claims

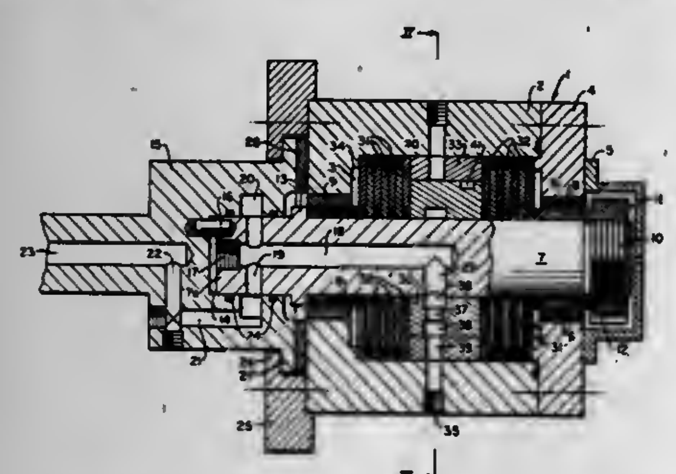

1. A mechanical seal in the bore of a casing for transferring high-pressure fluid with a rotatable shaft, said casing having at least one opening communicating with the bore thereof for conducting fluid under high pressure, bearing members having radial clearances mounting said shaft substantially free of an axial force to extend within the bore of said casing for axial movement in said casing, said shaft having a central bore extending between radial and spaced-apart fluid openings, the combination therewith of:

- a first group of discs arranged in spaced-apart relation along said rotatable shaft,
- means including spacers between the discs of said first group of discs for clamping the discs to said rotatable shaft,
- a second group of discs arranged in a non-rotatable manner at spaced-apart locations in the bore of said casing to extend around said shaft and mesh with discs of the first group in the manner of a labyrinth,
- means including spacers between the discs of said second group for clamping such discs to said casing in the bore thereof, the axial mobility of said shaft being limited only by an 0.2 millimeter or less clearance defined by said spacers between the discs of said first and second groups of discs and the radial clearance between said spacers and discs being only slightly greater than the radial clearance in said bearing means for decreasing the pressure of any fluid between consecutive discs to minimize fluid loss, each of said means having alignable openings to conduct high-pressure fluid between a radial fluid opening of the shaft and the opening in the casing in a direction radially between discs of said first and second groups of discs.

4,302,020
ACTUATING SEALING JOINT

Kenneth A. Morales, Cayce, S.C., assignor to United Aircraft Products, Inc., Dayton, Ohio

Filed Mar. 7, 1980, Ser. No. 127,973

Int. Cl.³ F16J *15/08*

U.S. Cl. 277—205 7 Claims

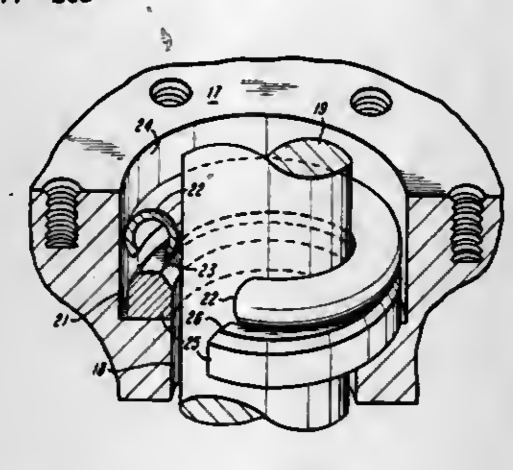

1. A sealing joint, including means providing a recess and a rod projecting axially through said recess, said rod and an outer wall of said recess defining concentric radially spaced apart surfaces to be sealed, a continuous generally toroidal sealing member circular in cross section in said recess and providing sealing surfaces on inside and outside diameters thereof, an end face of the sealing member being open, an actuating member received in said recess and having a tapered nose portion to be received in the open end face of said sealing member, said members being in a preceding succeeding relation in said recess, and means for effecting an axial relative approaching motion of said members causing an interior penetration of said sealing member by the tapered nose portion of said actuating member and a relative separating motion of said sealing surfaces, said sealing member having a free height normally less than the distance between said surfaces to be sealed and being expansible by said means effecting an axial relative approaching motion of said members to move sealing surfaces thereon radially outwardly into contact with said surfaces to be sealed.

4,302,021
NONLOOSENING CHUCK

Günter H. Röhm, Heinrich-Röhm-Str. 50, 7927 Sontheim, Fed. Rep. of Germany

Filed Apr. 11, 1980, Ser. No. 139,339

Claims priority, application Fed. Rep. of Germany, Apr. 14, 1979, 7910976[U]

Int. Cl.³ B23B *31/10*

U.S. Cl. 279—60 10 Claims

1. A chuck comprising:

- a chuck body defining a chuck axis and formed centered on said axis with an annular array of outwardly directed teeth;
- a plurality of generally angularly equispaced and radially displaceable jaws on said body;
- a tightening sleeve rotatable on said chuck body about said axis;
- means including formations on said jaws, on said body, and on said sleeve for displacing said jaws radially inwardly on rotation of said tightening sleeve about said axis in a tightening direction on said body and for permitting radial outward displacement of said jaws on rotation of said sleeve on said body in an opposite loosening direction;
- a ratchet pawl pivoted about a pawl axis generally parallel to said chuck axis and fixed on said sleeve, said pawl having an end engageable with said teeth, said teeth and pawl being so constructed as to permit rotation of said tightening sleeve on said body in said tightening direction when said end is engaged with said teeth and to prevent rotation in said loosening direction when said end is engaged with said teeth;

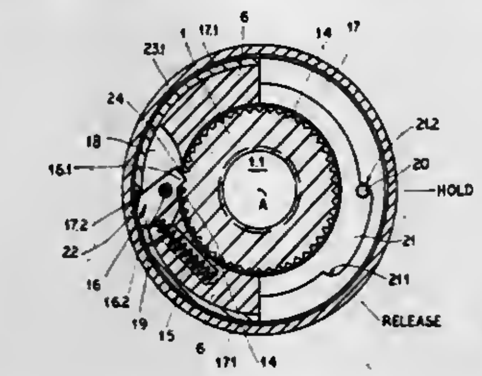

- a spring braced between said pawl and said sleeve urging said end of said pawl into radial engagement with said teeth; and
- means including a release ring rotatable relative to said chuck body between a holding position allowing said spring to press said end of said pawl against said teeth and a releasing position holding said end of said pawl out of engagement with said teeth.

4,302,022
HIGH-LOW TRAILER

William N. Schoeffler, and Romona B. Schoeffler, both of 3600 Simcoe, Apt. 8, Lafayette, La. 70501

Filed Dec. 31, 1979, Ser. No. 108,953

Int. Cl.³ B60P *1/02*

U.S. Cl. 280—43.19 6 Claims

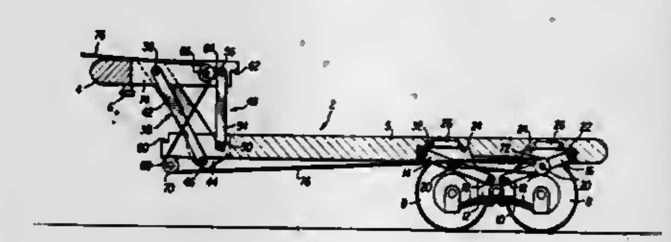

1. A trailer convertible from a stepped low bed trailer to a high flat bed trailer comprising:

- a trailer body having a front bed portion provided with means for attaching the same to a tractor and a rear bed portion having ground wheels journalled thereon;
- connecting means connecting said front and rear bed portions for relative vertical movement from a first position wherein said rear portion is lower than said front portion to a second position where said front and rear portions are substantially coplanar and define a continuous flat bed;
- means for elevating and lowering said rear portion relative to said wheels; and
- operating means for simultaneously moving the forward and aft ends of said rear bed portion vertically relative to said front bed portion, said means for elevating and lowering said rear bed portion comprising a carriage on which said wheels are journalled, front and rear struts pivoted to said carriage, at their lower ends, and having their upper ends slidably guided on said rear portion for movement toward and from each other.

4,302,023
DOLLY WITH VERTICALLY ADJUSTABLE SHELF

Lloyd W. Kiesz, 71 Elm St., Woodland, Calif. 95695

Filed May 11, 1979, Ser. No. 38,295

Int. Cl.³ B62D *61/12*

U.S. Cl. 280—43.24 16 Claims

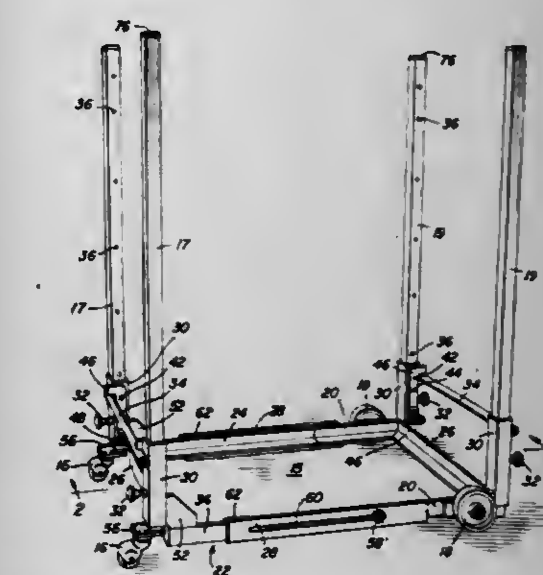

1. A device for support of an article during transport or storage on a surface at an adjustable height above the surface comprising a plurality of rail means, a substantially horizontal shelf means slidable vertically on said rail means for support of the article, the shelf means including clamp means for adjustment of the height of the article in storage thereof, the shelf means further including shelf wheel means for engaging the surface for transport of the article when the shelf is clamped by said clamp means to a lowermost position on said rail means, said rail means comprising two pair of vertical rails, each of the first pair of which includes a rail wheel means contacting the surface, each of the second pair of which is in close proximity to said shelf wheel means when said shelf means is in said lowermost position so as to permit lifting of the second pair of rails from said surface, each of said rails of at least one of said pair being independently movable with respect to said shelf means in the vertical direction.

16. A device for the support of an article during transport or storage on a surface at an adjustable height above the surface comprising a plurality of shelf support means, a substantially horizontal shelf means slidable vertically on said shelf support means for support of the article, handle means for manually sliding said shelf means vertically on said shelf support means, the shelf means including clamp means for adjustment of the height of the article in storage thereof, the shelf means further including shelf wheel means for engaging the surface for transport of the article when the shelf means is clamped by said clamp means to a lowermost position on said shelf support means, said shelf support means comprising two pair of vertically elongated members extending above the shelf means when the shelf means is in the lowermost position, each of the first pair of which includes member wheel means contacting said surface, said shelf support means supporting said shelf means and said article on said surface when said shelf means is in a raised position whereby said shelf wheel means are out of engagement with the surface and when said shelf means is in the lowermost position on said shelf support means whereby said device can be moved relative to said surface by movement of said member wheel means and said shelf wheel means.

4,302,024
FLORAL CART
Carol D. Weddle, 111 W. Juniper St., Brea, Calif. 92621
Filed Dec. 7, 1979, Ser. No. 101,205
Int. Cl.³ B62B *1/26*
U.S. Cl. 280—47.33 8 Claims

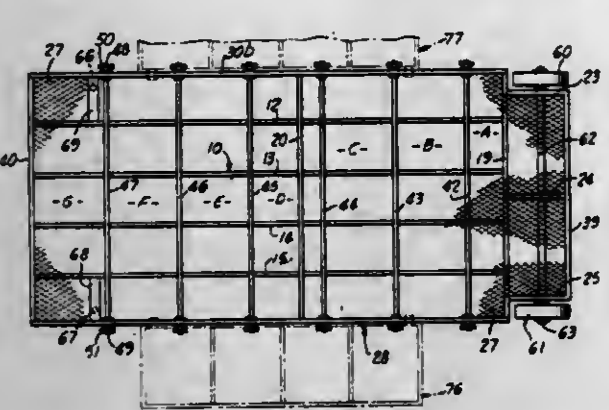

1. A floral cart for transporting a plurality of floral baskets, pots, sprays, and the like comprising
a bottom substantially planar and substantially rectangular frame formed from a plurality of longitudinal tubes and a plurality of transverse tubes welded together to form the bottom frame, and support material welded to and substantially covering the bottom frame to provide a support surface,
right and left side frames secured to the bottom frame and extending upwardly therefrom at substantially right angles, each of said side frames including longitudinal tubes, one tube disposed above another and vertically spaced apart to form upper longitudinal channels extending along the sides of the floral cart,
tube means secured at the ends of said cart to said side frames to form front and rear ends of the cart,
a wheel assembly comprising a pair of wheels affixed to the bottom frame near the front of the cart, and leg means secured to the bottom frame near the rear end of the cart, and
a plurality of adjustable transverse rails having ends aligned along an axis the same as or parallel to that of its respective transverse rail and adapted to fit within the upper longitudinal channels formed in the side frames, said rails including means for locking said rails to the tubes forming the upper longitudinal channels in the side frames to form adjustable compartments in said cart, said locking means being aligned along said axis.

4,302,025
PAPER SHEET MATERIAL HANDLING CART HAVING CENTRAL BRAKE ASSEMBLY
Gerald E. Waddell; Clayton W. Windler, and Ronnie K. Swint, all of Emporia, Kans., assignors to Kansa Corporation, Emporia, Kans.
Filed Feb. 22, 1980, Ser. No. 123,744
Int. Cl.³ B62B *5/04*
U.S. Cl. 280—79.1 A 11 Claims

1. A mobile cart for sheet material or the like, comprising:
a base;
means supporting said base for movement thereof upon a support surface;
wall structure secured to said base and extending upwardly therefrom for defining with the base at least a pair of separate sheet-receiving compartments; and
selectively operable brake mechanism located at the central region of the cart for fixing said cart against translatory movement, and for permitting pivoting of the cart about an upright axis for allowing access to each of said com-

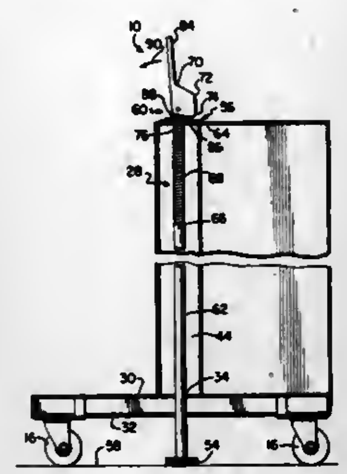

partments respectively from a single desired work station adjacent the cart.

4,302,026
CABLE FOR TOWING VEHICLES
Melvin J. Herman, 69-36A 215th St., Bayside, N.Y. 11364
Filed Jun. 15, 1979, Ser. No. 48,993
Int. Cl.³ B60D *1/18*
U.S. Cl. 280—491 F 5 Claims

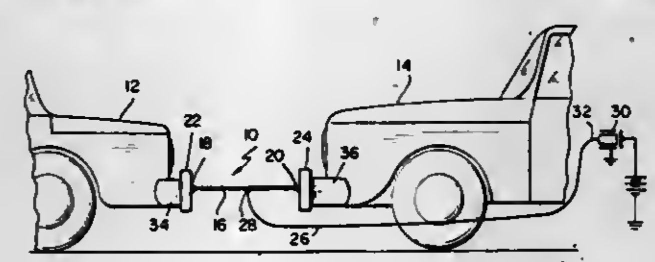

1. A cable device for towing vehicles comprising:
cable means being electrically conductive, a pair of electromagnets one each being securely disposed at opposite ends of said cable, and each electromagnet being formed so as to contact a metal portion of the body of a respective vehicle;
an electrical wire being electrically connected to said cable and being disposed between said electromagnetics; and power source means to connect said wire to a source of power, whereby when the power is generated, both electromagnetics are held at the same time to respective vehicles for the towing of one vehicle by the other.

4,302,027
SAFETY SKI BINDING
Alois Himmetsberger, and Heinz Wittmann, both of Vienna, Austria, assignors to TMC Corporation, Baar, Switzerland
Division of Ser. No. 896,234, Apr. 13, 1978, Pat. No. 4,190,264. This application Nov. 5, 1979, Ser. No. 91,435
Int. Cl.³ A63C *9/08*
U.S. Cl. 280—618 6 Claims

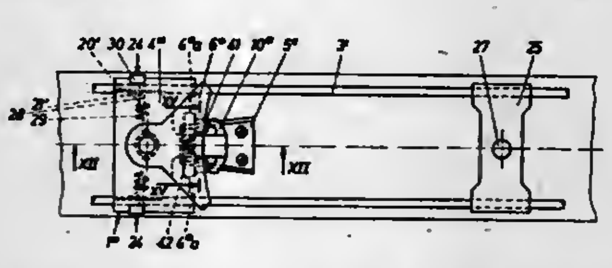

1. In a safety ski binding including a pivotally supported sole plate provided adjacent a front end thereof with a jaw plate having a holding jaw pivotally supported for movement about an axis which is perpendicular with respect to an upper surface of a ski, said sole plate being maintained in a centered position by means of a locking mechanism which is released upon exceeding a predetermined torque, the improvement comprising a mounting plate fixedly secured to said ski, said holding jaw having extension means thereon, slide piece means secured to said extension means and having laterally spaced extension members thereon, guide means on said mounting plate, laterally spaced sliding members slidingly supported on said guide means for movement longitdinally of said ski, said laterally spaced extension members slidingly engaging said sliding members to hold said holding jaw from turning about the pivot axis support therefor, said jaw plate including means for effecting a lengthwise adjustment of said jaw plate relative to said sole plate, and means on said jaw plate for maintaining said sliding members in said sliding engagement with said extension members, said sliding members sliding along said guide means as said jaw plate is positionally adjusted relative to said sole plate, a pivoting of said sole plate about said pivotal support therefor effecting a lateral sliding of said extension members relative to said sliding members until said extension members become disengaged from said sliding members at which time said holding jaw becomes free to pivot.

4,302,028
SAFETY SKI BINDING
Josef Svoboda, Schwechat, Austria, assignor to TMC Corporation, Baar, Switzerland
Filed Sep. 6, 1979, Ser. No. 72,878
Claims priority, application Austria, Sep. 8, 1978, 6489/78
Int. Cl.³ A63C *9/18*
U.S. Cl. 280—631 10 Claims

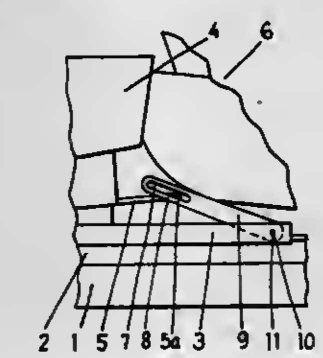

1. In a safety ski binding having a base plate which can be fastened on a ski, hold-down means for holding a ski boot, said hold-down means having a stepping spur and can be swung about an axis which extends substantially at a right angle with respect to the longitudinal axis of the ski between an open position and a closed position holding said ski boot, said hold-down means moving to said open position when sufficient forces are exerted by said ski boot on said ski binding and said stepping spur facilitating movement of said hold-down means to said closed position when stepped down upon by said ski boot, the improvement comprising a U-shaped pedal having a bight portion which is hingedly connected to said base plate and having two legs which straddle said stepping spur, each said leg having a slot therein and including axles which extend outwardly in the direction of the ski edges from opposite sides of said stepping spur, each said axle being slidably received in a respective said slot.

6. A safety ski binding, comprising:
a base plate adapted to be mounted on a ski;
hold-down means mounted on said base plate for holding a ski boot, said hold-down means having a stepping spur fixedly located thereon and can be swung about a first axis which extends substantially at a right angle with respect to the longitudinal axis of the ski between an open position and a closed position holding said ski boot, said hold-down means moving to said open position when sufficient forces are exerted by said ski boot on said ski binding and said stepping spur facilitating movement of said hold-down means to said closed position when stepped down upon by said ski boot; and
elongated pedal means pivotally secured at one end thereof to said base plate about a second axis parallel to said first axis, said second axis being located forwardly of said ski binding and stepping spur and beneath the sole of said ski boot when said ski boot is held thereby in said closed position thereof, the other end of said elongated pedal means projecting rearwardly toward and slidably engaging an upwardly facing part of said stepping spur fixedly secured to said hold-down means so that a stepping down upon said pedal means by said ski boot will effect a simultaneous moving of said hold-down means to said closed position independent of the construction of the sole of said ski boot.

4,302,029
GOLF BAG CART
James T. Albertson, 205 S. Wilson, Wenatchee, Wash. 98801
Filed Jan. 10, 1980, Ser. No. 110,939
Int. Cl.³ B62B *1/20*
U.S. Cl. 280—646 9 Claims

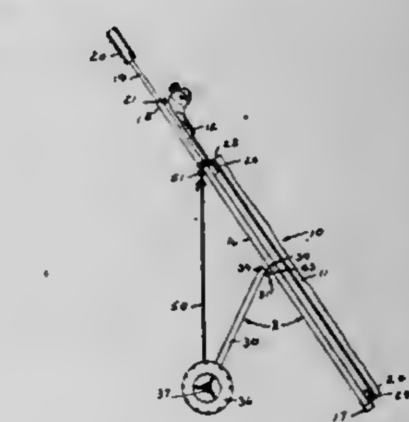

1. A collapsible golf bag cart, comprising:
an elongated frame member extending from a foot end to a handle end;
means for mounting a golf bag to the frame member;
a pair of elongated legs, each having an inward end and an outward end;
a pair of wheels mounted to the outward leg ends for free rotation about wheel axes;
means on the frame member for pivotally mounting the inner ends of the legs for movement between operative positions wherein the legs diverge from one another and project outwardly from the frame member to form an acute angle with part of the frame member and inoperative positions wherein the legs are adjacent to both one another and to the frame and the wheels are adjacent to one another and to the handle end of the frame member;
an elongated extensible strap means releasably connectable to the frame member and legs for yieldably urging the legs outwardly from the frame member toward the operative positions and for alternatively holding the legs together against the frame member when in the inoperative positions; and
stop means operably interposed between the legs and frame member for preventing pivotal movement of the legs outwardly from the frame member beyond their respective operative positions.

4,302,030
SEAT BELT SYSTEMS
William S. G. Clay, Brampton, England, assignor to Kangol Magnet Limited, Carlisle, England
Filed Nov. 20, 1979, Ser. No. 95,941
Claims priority, application United Kingdom, Nov. 20, 1978, 45187/78
Int. Cl.³ B60R *21/02*
U.S. Cl. 280—802 11 Claims

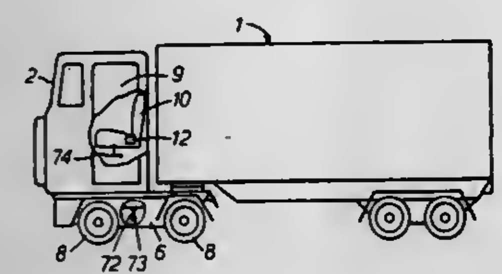

1. In a vehicle including a chassis, a cabin, means mounting said cabin on said chassis to permit said cabin to experience accelerations in excess of those experienced by the chassis, and a seat and a seat belt system associated therewith mounted in said cabin, said seat belt system including a seat belt retractor adapted to lock against belt withdrawal in response to acceleration of the retractor beyond a first predetermined amount, the improvement comprising electrical anti-locking means in said retractor and having a first condition preventing locking thereof and a second condition permitting such locking, electrical acceleration sensing means adapted to change condition in response to an acceleration of said chassis exceeding a second predetermined amount, an electrical supply source, and circuit means connecting together said anti-locking means, said means and said supply source so that said anti-locking means is in said first condition thereof until said sensing means changes condition in response to said chassis acceleration.

4,302,031
WEBBING ANCHOR LOCK MECHANISM
Yuji Nishimura, Nagoya, and Tatsushi Kubota, Okazaki, both of Japan, assignors to K. K. Tokai Rika Denki Seisakusho, Aichi, Japan
Filed Oct. 26, 1979, Ser. No. 88,347
Claims priority, application Japan, Oct. 30, 1978, 53-149155[U]
Int. Cl.³ B60R *21/00*
U.S. Cl. 280—804 13 Claims

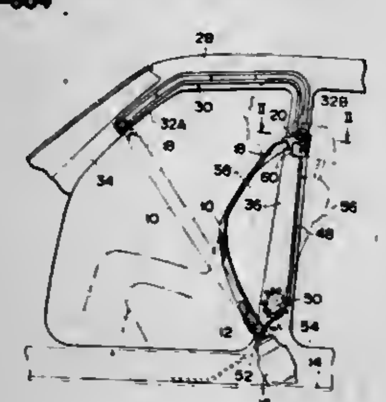

1. A webbing anchor lock mechanism used in an automatically fastening type seatbelt system for automatically fastening or unfastening a restraining webbing to an occupant of a vehicle, comprising:
(a) an anchor plate for engaging the end portion of said webbing;
(b) a driving member driven by a driving device for moving said anchor plate along a guide rail formed on the vehicle;
(c) a locking lever pivotally supported on said vehicle and provided at one end thereof with a locking pawl for locking said anchor plate to prevent the movement of said anchor plate;
(d) a reinforcing frame provided at the rear end portion of said guide rail, said reinforcing frame having a letter "U"-shaped receiving groove to receive a portion of said anchor plate when the webbing is automatically fastened to the occupant, said groove constituting a stopper for said anchor plate; and
(e) a release block disengageably coupled to said driving member for movement with said driving member and to abut against said locking lever to rotate same for unlocking the locking pawl from the anchor plate; whereby, when said release block does not abut against the locking lever, said locking pawl reliably locks the anchor plate so that the tensile force of the webbing can be positively supported by the vehicle body in an emergency of the vehicle.

4,302,032
CLIP-ON LEDGER BOOK IDENTIFIER
Richard A. Randall, 6309 Connaught Ct., Oklahoma City, Okla. 73132, and George M. Close, 400 Thornton, Norman, Okla. 73069
Filed Aug. 29, 1979, Ser. No. 70,603
Int. Cl.³ B42D *3/18*; G09F *3/06*
U.S. Cl. 281—29 12 Claims

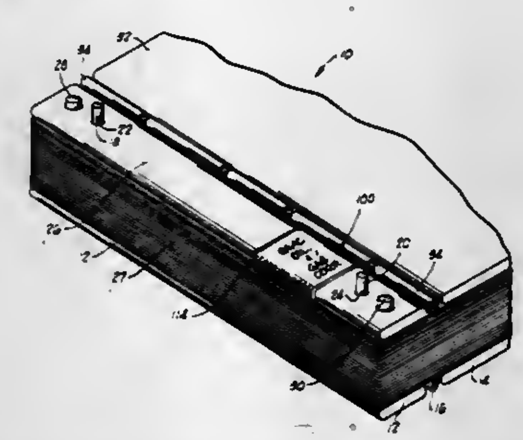

1. An identification apparatus, in combination with a book of the type having a binder bar with a cover pivotally attached to said binder bar, said binder bar having front and back sides with inner and outer edges connecting said front and back sides, said identification apparatus comprising:
a middle portion for extending transversely across one of said front and back sides of said binder bar; and
first and second edge portions, extending at opposite ends from said middle portion, said first and second portions including curved surfaces for closely engaging said inner and outer edges, respectively, of said binder bar thereby to retain said identification apparatus in place thereon, and wherein one of said curved surfaces includes an integral lens means for magnifying an identifying label oriented for viewing at said outer edge of said binder bar.

4,302,033
DUAL-SEAL ROTARY FLUID COUPLING
Richard A. Evans, Plymouth, and Robert F. Rasmussen, Minneapolis, both of Minn., assignors to Honeywell, Inc., Minneapolis, Minn.
Filed Sep. 28, 1979, Ser. No. 79,930
Int. Cl.³ F16L *55/00*
U.S. Cl. 285—14 2 Claims

1. A dual seal rotary fluid coupling comprising:
stationary body member having a hollowed interior defining an axial fluid passage;
a rotatable conduit member having one end journalled in the stationary body member, and forming therewith a continuous fluid passage;
a pair of substantially fluid tight resilient radial sealing means cooperating with the interface of the inner surface of the stationary member and the outer surface of the rotatable member spaced axially along said interface, wherein each of said sealing means further comprises a polymer material having an integrally mounted spring member such that resiliency is maintained in the temperature range of from approximately $-60°$ F. to $+450°$ F.;

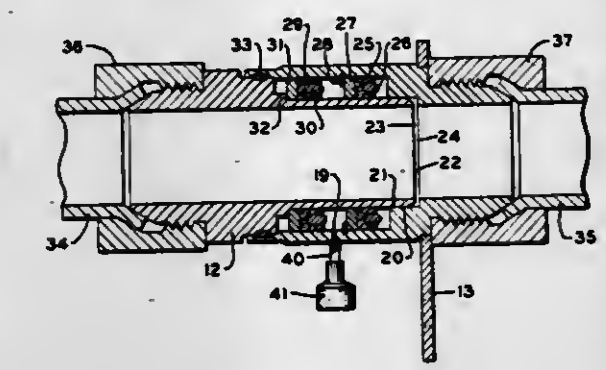

vent drain means in said stationary body member in communication with the outer surface of said conduit member and disposed between said pair of sealing means for draining any fluid escaping said sealing means; and
retaining band means for retaining said rotatable member in said stationary member.

4,302,034
HYDRAULIC COUPLING DEVICE
Walter Weirich, Dortmund, and Gunther Hennlich, Hattingen, both of Fed. Rep. of Germany, assignors to Gewerkschaft Eisenhutte Westfalia, Lunen, Fed. Rep. of Germany
Filed Apr. 3, 1980, Ser. No. 136,868
Claims priority, application Fed. Rep. of Germany, Apr. 5, 1979, 2913686
Int. Cl.³ F16L *39/02*
U.S. Cl. 285—26 11 Claims

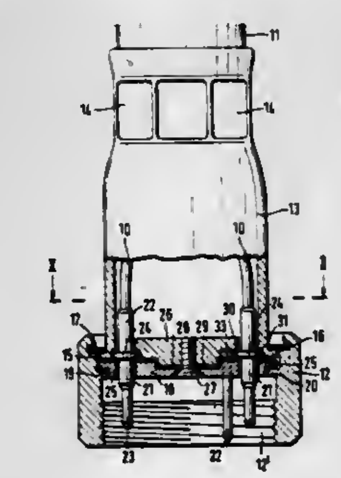

1. A hydraulic coupling device for a multi-line hose having a plurality of hydraulic lines housed within a flexible sheath, the coupling device comprising a casing, a plurality of plug pins housed within the casing, and means for holding the plug pins within the casing, the plug pins each being connected to a respective line of the hose, wherein each of the plug pins is provided with a collar, and wherein the holding means comprises a holder, a retainer and a sleeve, the radially inner peripheral edges of the collars being loosely held against the holder by an abutment face on the retainer, the radially outer peripheral edges of the collars being loosely held against the holder by an abutment face on the sleeve, means for attaching the casing to the sleeve, and means for attaching the holder to the retainer, and the sleeve being connected to the sheath of the multi-line hose.

4,302,035
ONE PIECE ELECTRICAL CONNECTOR
Richard S. Ochwat, 1421 Gables, Wheaton, Ill. 60187
Continuation-in-part of Ser. No. 19,510, Mar. 12, 1979, abandoned. This application Apr. 30, 1979, Ser. No. 34,450
Int. Cl.³ F16L *3/04*
U.S. Cl. 285—158 12 Claims

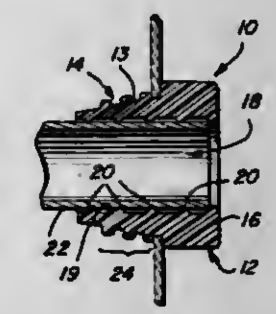

1. A one-piece electrical conduit connector of the type adapted to interconnect a length of electrical conduit to an electrical box having at least one circular knockout plug which, upon removal, presents a circular knockout portion and at least one residual tab comprising
a substantially tubular connector body having an outer engagement surface and an inner contacting surface,
said tubular connector body being sized to accomodate the insertion therein of a length of electrical conduit,
said outer engagement surface having a threaded portion for engagement with the circular knockout portion of the electrical box,
residual tab engagement means associated with said threaded portion and adapted to engage the lock with the residual tab formed in the circular knockout portion thereby to engage and lock said connector body into the electrical box,
said residual tab engagement means formed by a terminal thread included in said threaded portion,
said terminal thread having at least one receiving slot formed therein,
said receiving slot being adapted to receive the residual tab when said connector body is fully threaded within the knockout portion,
said outer engagement surface being further provided with a gripping head portion positioned adjacent to said threaded portion and adapted to facilitate the gripping and threadingly locking engagement of said connector body in the electrical box,
said connector body being split along the entire length thereof by a longitudinal slot which traverses said threaded portion and said gripping head portion,
and said inner contacting surface being provided with conduit gripping means for contacting and gripping a portion of conduit inserted within said tubular connector body,
whereby said tubular connector body may be threadingly engaged within the knockout portion of an electrical box and locked in position when said residual tab engagement means engage the residual tab, while simultaneously, said conduit gripping means contact and grip a portion fo the length of conduit inserted within the tubular connector body thereby to interconnect a length of electrical conduit to an electrical box.

4,302,036
TUBE COUPLING
Donald G. Burge, Plainwell, Mich., assignor to Parker-Hannifin Corporation, Cleveland, Ohio
Division of Ser. No. 884,872, Mar. 9, 1978, Pat. No. 4,188,051. This application Aug. 16, 1979, Ser. No. 66,988
Int. Cl.³ F16L *21/06*
U.S. Cl. 285—323 5 Claims

1. A coupling for tubes wherein a fluid tight joint may be

made by insertion of a tube therein, comprising a body having a first bore for receiving a tube, a tubular member to provide internal support for the tube, a chamber axially outwardly of and adjacent the first bore and in which a packing ring is received and sealingly engages the tube and a radially outer cylindrical wall of said chamber, a second bore in the body axially outwardly of the chamber and in which a sleeve is received, and an internal thread axially outwardly of the second bore, a transverse shoulder integral with said body at the bottom of the second bore engageable with an inner end of the sleeve, a nut threadedly engaged with said internal thread, engaged abutment surfaces on the body and nut fixing the axial position of the nut relative to the body said nut having a bore therethrough that terminates in a frusto-conical cam surface at the inner end of the nut, said bore in said nut being of a diameter to closely receive and support said tube and being disposed outwardly of said sleeve, said sleeve having a circumferentially

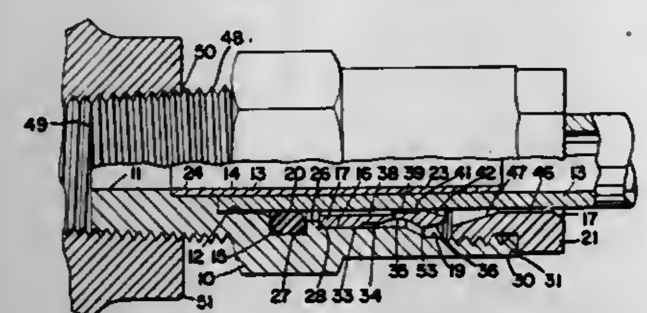

continuous inwardly facing surface that is engageable with said shoulder when said sleeve is in an inner position, and having longitudinal slits at its outer end forming a plurality of circumferentially spaced fingers, said fingers having a radially inwardly projecting rib of smaller diameter than the tube prior to insertion of the tube within the coupling and adapted to grip the tube for movement of the sleeve therewith between inner and outer positions, said fingers having a flare mouth and an external frusto-conical surface at their outer ends, said sleeve when said inwardly facing surface is against said shoulder being out of contact with said cam surface, said sleeve being in engagement with said cam surface when said sleeve is in an outer position whereby the outer ends of said fingers and said rib are contracted radially inwardly by said cam surface and the rib grips the tube for retaining the tube within the coupling, said radially outer wall of said chamber being of larger diameter than said second bore.

4,302,037
LATCH FASTENER FOR WINDOWS, DOORS OR THE LIKE
Dario Nunez, Santiago, Chile, assignor to Metalurgica Rodynet Ltda., Santiago, Chile
Filed Apr. 19, 1979, Ser. No. 31,610
Claims priority, application Argentina, Nov. 14, 1978, 274437
Int. Cl.³ E05C *1/10*
U.S. Cl. 292—128 **23 Claims**

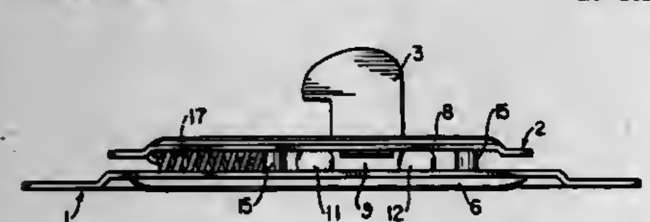

1. A latch fastener for construction elements such as windows, doors or the like which comprises a base member, and a movable member having latching means configured to cooperate with a structural member to lock and unlock the construction element, said base member and said movable member respectively including at least two substantially longitudinally extending and parallel races configured to retain rotatable bearing members therebetween, at least two rotatable bearing members positioned in spaced relation within each race so as to retain said base and movable members in spaced relation and to facilitate movement of said movable member and latching means relative to said base member in directions generally parallel to said races and to positions corresponding to locked and unlocked positions of the construction element while said bearing members rotatably move within said races therebetween, and means positioned and adapted to maintain said base and movable members and said bearing members in assembled relation while permitting movements of said movable member relative to said base member.

4,302,038
LOCKING ASSEMBLY
William J. Ervine, 521 Terry Ave., Billings, Mont. 59101
Continuation-in-part of Ser. No. 876,636, Feb. 10, 1978, abandoned. This application Oct. 9, 1979, Ser. No. 82,544
Int. Cl.³ E05C *17/32*
U.S. Cl. 292—263 **8 Claims**

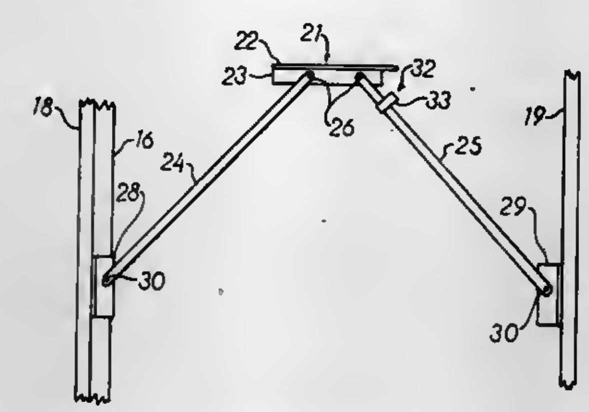

1. A locking assembly for a sliding door or window including an angle member disposed with a first flange section in a horizontal position normally and a second flange section extending downwardly therefrom in a vertical plane, a pair or rigid elongated bars connected to said second flange section below said first flange section with at least one being pivotally connected, said elongated bars being disposed normally in a horizontal position aligned longitudinally of each other with their adjacent ends spaced longitudinally along said second flange section, mounting brackets pivotally attached to the free ends of said elongated bars, and a loop member positionable to abut between the bottom of said first flange section and the top of said pivotally connected elongated bar selectively to prevent said elongated bars from being oriented in a longitudinally aligned locked position, said loop member being slidably disposed on said one of said elongated bars.

4,302,039
STRIKING BOX FOR RETAINING THE BOLT OF A DOOR LOCK
Cornelis Dukel; Pieter Hoogerheide, both of The Hague, and Jan G. C. Niehaus, Leidschendam, all of Netherlands, assignors to Staat der Nederlanden (Staatsbedrijf der Posterijen, Telegrafie en Telefonie), The Hague, Netherlands
Filed Jul. 25, 1979, Ser. No. 60,510
Int. Cl.³ E05C *13/02*
U.S. Cl. 292—341.16 **8 Claims**

1. Striking box for retaining the bolt of a door lock, comprising a bolt stop (4, 24, 45), an activating device (9, 29, 48) for moving said bolt stop, a mechanism mounted between said activating device and said bolt stop which ensures that the movement of said bolt stop is at first prevented, said mechanism comprising a latch (6, 26, 46) which moves in a path

crossing the path of said bolt stop, said latch being coupled to and operated by said activating device, and a signalling switch

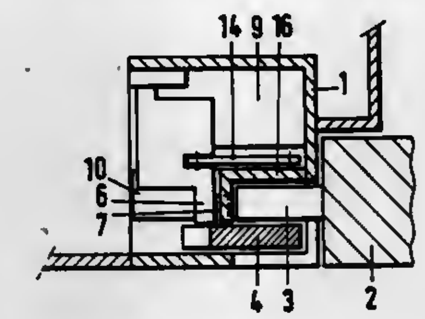

(8, 28, 61) operated by said activating device prior to operating said bolt stop to release the bolt.

4,302,040
WATER JET CLEANING DEVICE
Raymond J. Lazar, 110 Jeepers Dr., Naples, Fla. 33942
Filed Sep. 19, 1980, Ser. No. 189,388
Int. Cl.³ A47F *13/06*
U.S. Cl. 294—19 R **2 Claims**

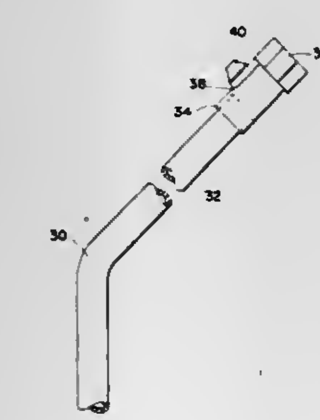

1. A water jet cleaning device comprising:
A. an elongated tubular handle having a garden hose inlet fitting with rotatable valve at its upper end;
B. an inverted transparent cup secured at said tubular handle bottom end with the bottom end extending into an axial hole defined in said cup, said cup being supported upon said tubular end such that the open cup end is presented outwardly of said tubular handle, said cup further including:
 i. an annular collar projecting axially from the inverted bottom thereof, so as to engage complementally the exterior surface of said tube end; and
 ii. an inner shoulder;
C. a perforated plate supported as a transverse platform within said cup and complementally engaging said inner shoulder, so as to intersect water flowing through said handle and outwardly of said cup; and
D. a reinforcing collar fitted over said tubular handle and said annular collar, such that the reinforcing collar bottom complementally engages the inverted cup bottom, said annular collar and said tubular handle.

4,302,041
SHEET RETAINER FOR A SHEET TRANSPORTER
John K. Kreitler, Festus, Mo., assignor to PPG Industries, Inc., Pittsburgh, Pa.
Filed Dec. 17, 1979, Ser. No. 103,987
Int. Cl.³ B66C *1/22*
U.S. Cl. 294—67 AB **8 Claims**

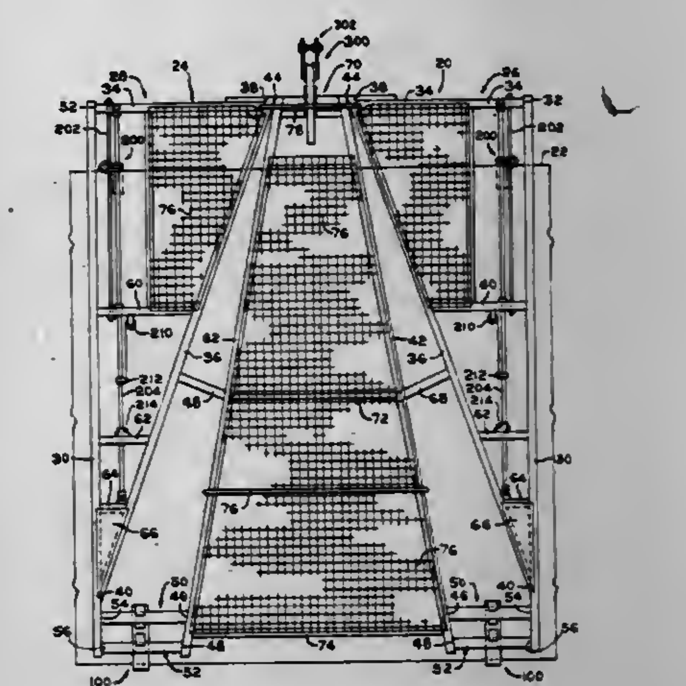

1. A sheet retainer for a sheet transporter, the transporter having a sheet receiving surface between a top end and a bottom end, the sheet retainer comprising:
a rod;
means for moving said rod along a first reciprocating path between the top and bottom ends of the transporter;
a sheet engaging member;
means for mounting said sheet engaging member on said rod to move said sheet engaging member (1) along the first reciprocating path in response to the movement of said rod and (2) along a second reciprocating path transverse to the first reciprocating path;
means for securing said sheet engaging member on said rod in one of a plurality of positions along the second reciprocating path;
biasing means continuously acting on said rod for urging said rod along the first reciprocating path in a direction away from the bottom end of the transporter; and
means acting on said rod for securing said sheet engaging member in one of a plurality of positions along the first reciprocating path.

7. An extension for a sheet supporting member mounted on a sheet transporter having a sheet receiving surface, the sheet supporting member having an arm extending away from the sheet receiving surface and having a sheet supporting surface generally normal to the sheet receiving surface, the extension comprising:
a generally U-shaped member having a pair of outer legs and a middle leg to define a receiving groove, said groove sized to receive end portion of the arm;
means coacting with at least one of said legs of said U-shaped member and adjacent surface of the arm to secure said U-shaped member on the arm; and
a plate connected to at least one of said outer legs and extending toward the other one of said outer legs to prevent pivotal motion in a selected direction of said U-shaped member relative to the arm.

4,302,042
SHEET TRANSPORTER
Thomas P. Kerr, and John K. Kreitler, both of Festus, Mo., assignors to PPG Industries, Inc., Pittsburgh, Pa.
Filed Dec. 17, 1979, Ser. No. 103,961
Int. Cl.³ B66C *1/22*
U.S. Cl. 294—67 AB 10 Claims

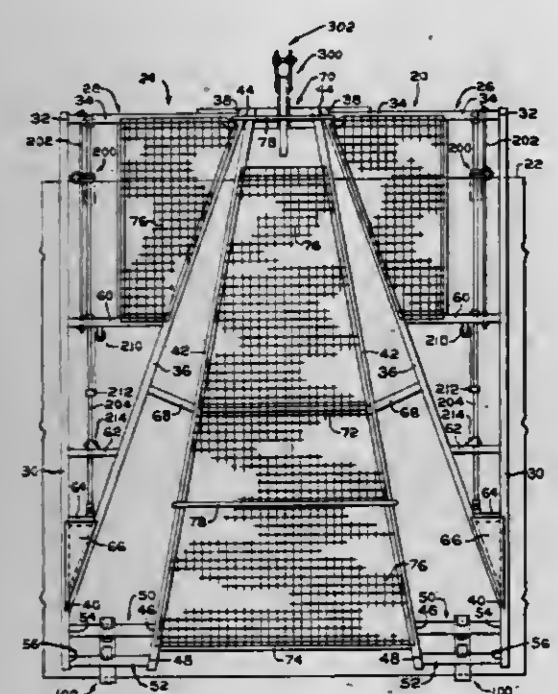

1. A sheet transporter comprising:
a frame having a right side, a left side, a top end and a bottom end to define a sheet receiving surface therebetween;
sheet retaining means mounted on said frame adjacent each of said right and left sides and adjacent said top end of said frame;
means mounting said sheet retaining means for moving said sheet retaining means toward and away from the sheet receiving surface;
means mounting said sheet retaining means for moving said sheet retaining means along a reciprocating path between said top end and said bottom end and for biasing said sheet retaining means in a first direction along the reciprocating path;
first means acting on said moving means for securing said sheet retaining means in a preselected position relative to the sheet receiving surface;
second means acting on said moving and biasing means for securing said sheet retaining means at a preselected position in the reciprocating path;
at least one guiderail mounted adjacent each of said right and left sides of said frame with its longitudinal axis generally parallel to said bottom end;
a pair of sheet support means each having a sheet supporting surface;
means including a groove mounting each of said sheet support means for slidably mounting a sheet supporting means on a respective one of said at least one guiderail with the sheet supporting surface of said sheet supporting means generally normal to said sheet receiving surface and parallel to the bottom edge of said frame; and
means for securing each one of said sheet support means in a preselected position on its respective one of said at least one guiderail.

4,302,043
ROLL-UP TARP FOR TRAILERS
Jerry R. Dimmer, Mooreton; Gene D. Ponto, Wahpeton; Edward F. Shorma, Wahpeton; Richard E. Shorma, Wahpeton; William J. Shorma, Wahpeton, all of N. Dak., and Duaine L. Miranowski, Breckenridge, Minn., assignors to Wahpeton Canvas Company, Inc., Wahpeton, N. Dak.
Filed Apr. 18, 1980, Ser. No. 142,373
Int. Cl.³ B60J *11/00*
U.S. Cl. 296—98 13 Claims

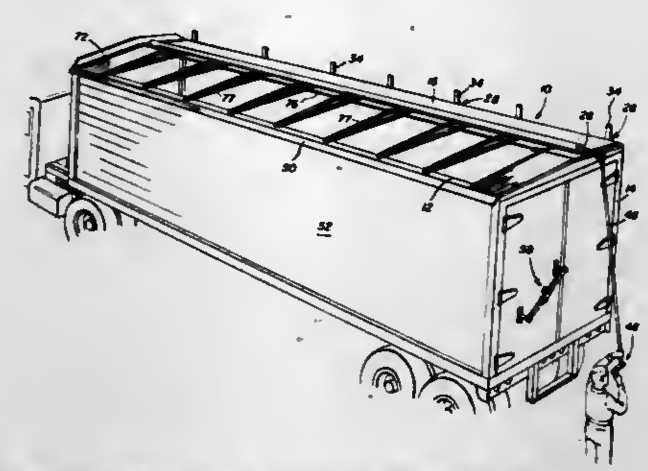

11. In combination, a covering apparatus for opened top bodies including a covering material connected to said body along one longitudinal side thereof; roll means for rolling said covering material laterally across said open top; and a latch plate attached along a second longitudinal edge of said body, said latch plate being canted outwardly and downwardly from said second longitudinal edge of said body for providing an area for wedging said roll means.

4,302,044
TRANSPORT TRUCK WITH MULTIPLE ACCESS CARGO CARRYING BODY
Elmer W. Sims, 15611 Narcissus La., Orland Park, Ill. 60462
Filed Jun. 7, 1979, Ser. No. 46,252
Int. Cl.³ B60P *9/00*
U.S. Cl. 296—183 15 Claims

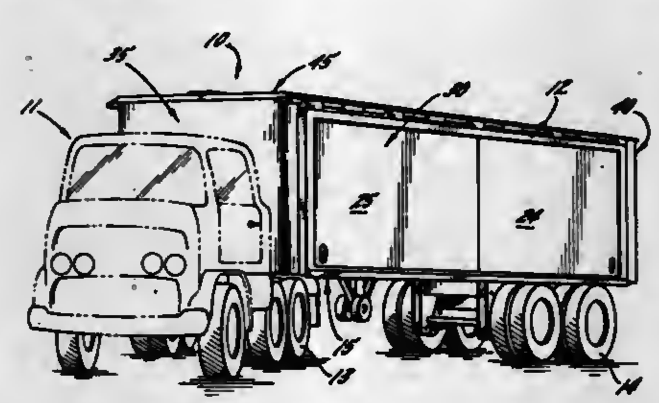

1. A truck body supported by a wheel assembly for operation on highways and the like comprising a base, and front rear and two lateral sides mounted on said base defining a cargo receiving area, a roof supported by said lateral sides for enclosing said cargo receiving area, each said lateral side of the truck body including a pair of sliding doors, means associated with each said lateral side defining a pair of adjacent upper door-receiving tracks and a pair of adjacent lower door-receiving tracks with one side door on each side of the truck body being slidably mounted in an inner pair of upper and lower tracks and another door on each side of the truck body being slidably mounted on an outer pair of said upper and lower tracks, each door being approximately half the length of the truck body and each pair of doors being slidable into an overlapping position to open approximately half of the lateral side of the truck body, said rear of the truck body including a rear door assembly that is operable to open essentially the entire rear side of the truck body for cargo access, said roof of said truck body including a plurality of roof panels which are movable between a first position closing the roof of the truck body and a second position opening the entire roof of the truck body, and a plurality of retractable supports interposed between said roof and base along each lateral side of the truck body, said supports being disposed at a location on said lateral side that is opened when said side doors are moved to their open positions, and said supports being retractable from an extended position between said roof and base to a retracted position that permits access to said cargo area from said side opening.

4,302,045
ANTI-THEFT MECHANISM FOR REMOVABLE AUTOMOBILE ROOF PANELS
Luther J. McAdams, Sr., 1626 E. 91st Pl., Chicago, Ill. 60617
Filed Nov. 5, 1979, Ser. No. 90,905
Int. Cl.³ B60J *7/18*
U.S. Cl. 296—224 3 Claims

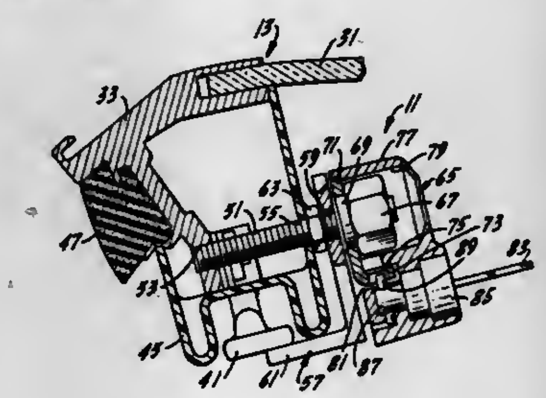

1. An anti-theft mechanism for a handle operated latching mechanism of a removable automobile roof panel of the type in which the handle pivots to latch and unlatch the panel, said mechanism including:
a post secured against axial movement relative to the handle and positioned adjacent the handle,
a keeper bar having an opening which slidably receives the post to position a portion of the bar in the path of opening pivotal movement of the handle to prevent such opening movement, which opening is sized relative to the post to prevent lateral movement of the keeper bar relative to the post, and
a locking means engageable with the post to prevent removal of the keeper bar from the opening path of the handle and disengageable with the post to permit removal of the keeper bar from the post.

4,302,046
PURSE HOLDER
Esther Lazazzero, 86 Greenlawn Ave., Clifton, N.J. 07013
Continuation-in-part of Ser. No. 685,727, May 12, 1976, abandoned. This application Nov. 24, 1978, Ser. No. 963,482
Int. Cl.³ A47C *7/62*
U.S. Cl. 297—191 10 Claims

1. A purse holder comprising a first pouch, said first pouch having first marginal edges disposed in a first rectangular shape, said first pouch having a first mouth extending along one side of said first rectangular shape, a second pouch, said second pouch having second marginal edges disposed in a second rectangular shape, said second pouch having a second mouth extending along one side of said second rectangular shape, said first pouch fixedly secured to said second pouch, said first mouth oppositely directed from said second mouth, purse handle fastening means for removably clamping a portion of a handle of a purse against an interior surface of said second pouch, wherein said interior surface defines a surface of a wall common to and separating said first pouch and said second pouch, whereby said purse may be entirely removably stored within said second pouch and having the entire said handle thereof removably enclosed within said second pouch, said first pouch including an elongated sheet portion thereof extending outwardly from said first rectangular shape, said elongated sheet portion being configured to have a length at least long enough to extend over and under the seat portion of a chair, whereby the free end of said elongated sheet portion extends outwardly from the rearmost underside portion of said

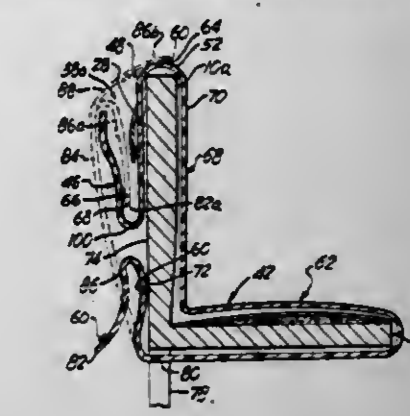

seat portion of said chair, at least one snap fastener element being fixedly secured to said elongated sheet portion, at least one complementary snap fastening element, said at least one complementary snap fastening element fixedly secured to said second pouch adjacent said second mouth thereof, whereby engaging said at least one snap fastening element to said at least one complementary snap fastening element secures the purse holder to said chair.

4,302,047
HINGE MOUNT FOR SEATS HAVING ADJUSTABLE BACKREST
Hermann Esser, Würselen, Fed. Rep. of Germany, assignor to Keiper Automobiltechnik GmbH & Co. K.G., Remscheid, Fed. Rep. of Germany
Filed Nov. 13, 1979, Ser. No. 93,712
Claims priority, application Fed. Rep. of Germany, Nov. 15, 1978, 2849542
Int. Cl.³ A47C *1/025*
U.S. Cl. 297—362 3 Claims

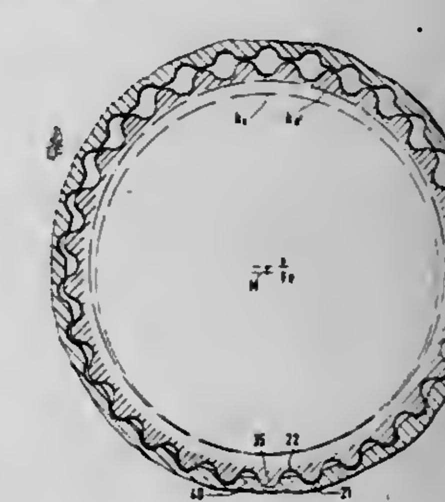

1. A hinged mount for seats having an adjustable backrest, comprising: a fixed mount part secured to the seat proper and a tiltable mount part secured to the backrest; a wobble gear assembly including an outer gear formed on one mount part and an inner gear formed on the other mount part; the number of teeth of respective gears differing at least about one tooth; a rotary axle having an eccentric portion supporting one of said gears and a concentric portion supporting the other gear to roll said outer gear in mesh with said inner gear; the outline of the teeth of one gear forming tangentially confluent convex and concave circular sections having a substantially equal radius of curvature; the outline of the teeth of the other gear being

formed of concave sections of a cycloid having a radius of curvature corresponding substantially to that of the circular sections of the one gear, of convex circular sections confluent with said cycloid sections and having a smaller radius of curvature than the latter, and of concave circular tip sections confluent with said convex sections and having a radius of curvature corresponding substantially to the radius of the crown of said one gear.

4,302,048
OCCASIONAL CHAIR
Velma Ann M. Yount, Rural Box 362-2, Denton, Tex. 76201
Filed Dec. 17, 1979, Ser. No. 104,664
Int. Cl.³ A47C *7/00*
U.S. Cl. 297—440 **1 Claim**

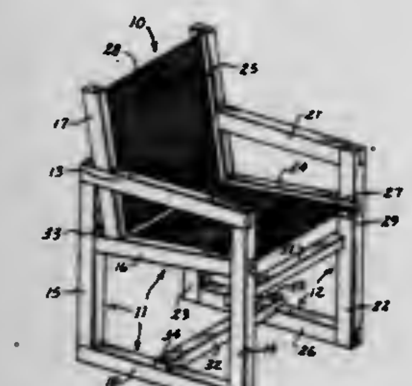

1. A article of supporting furniture, comprising:
two side members, a rectangular fabric seat means, a rectangular fabric back means, and three stretcher means; whereby a rigid chair is provided when said stretcher means are secured to said side members and whereby a collapsed chair is provided upon the selected removal of the stretcher means from said side members;
said two side members, each comprising:
a front leg means having a first and a second end and a first connecting point intermediate said first and second ends,
a back leg means having a third and a fourth end and a second connecting point intermediate said third and fourth ends,
an arm means having a fifth and a sixth end;
a brace rail means having a seventh and an eight end,
a seat rail means having a ninth and a tenth end and a third connecting point adjacent said tenth end and a back rail means having an eleventh and a twelfth end;
means for connecting said first end rigidly to said fifth end,
means for connecting said third end rigidly to said sixth end,
means for connecting said second end rigidly to said seventh end,
means for connecting said fourth end rigidly to said eight end,
means for connecting said ninth end rigidly to said first point,
means for connecting said tenth end rigidly to said second point,
means for connecting said eleventh end rigidly to said third point,
means for connecting one end of said rectangular fabric seat means into said seat rail means intermediate said ninth and tenth ends in one of said two side members,
means for connecting an end opposite said last said one end of said rectangular fabric seat means into said seat rail means of the other of said two side members, and
means for connecting one end of said rectangular fabric back means into said back rail means intermediate said eleventh and twelfth ends in one of said two side members, and
means for connecting an end opposite said last said one end of said rectangular fabric back means into said back rail of the other of said two side members;
said three stretcher means comprising:
a front, a bottom and a back stretcher means,
said front and bottom stretcher means being elongated brace members having butt means at each end thereof with tenon extensions therefrom,
a securing element for each of said tenon means extending perpendicularly thereto to oppose tensive forces between said side members, and said butt ends of each of said brace members oppose compressive forces thereon, and
said back stretcher means having an elongated brace member having butt means at each end with tenon extensions therefrom,
front socket means on said front legs means for receiving said front stretcher means securing elements intermediate said seat rail means and said bottom rail means,
bottom socket means on said bottom rail means for receiving said bottom stretcher means securing elements intermediate said front and said back leg means,
and aperture means defined by the front of said back leg means, the top of said seat rail means, and the back of said seat back rail means for securing said tenon extensions of said back stretcher means.

4,302,049
HARNESS RELEASE ASSEMBLY
Elwood J. B. Simpson, 3130 Crownview Paseo, Palos Verdes, Calif. 90274
Filed Apr. 27, 1979, Ser. No. 33,556
Int. Cl.³ A62B *35/00;* **B60R** *21/10*
U.S. Cl. 297—484 **33 Claims**

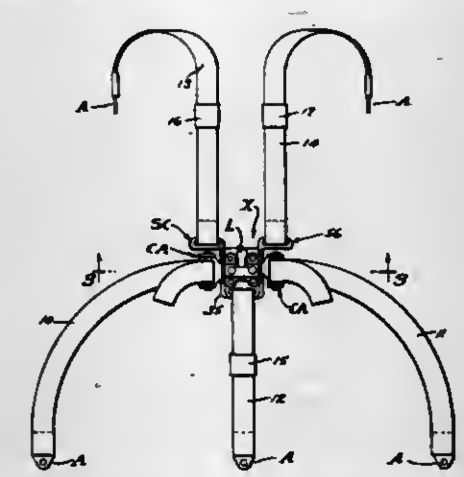

1. A single lever harness release assembly for simultaneous release of at least two separate seating straps and the like, and including;
a base member and an overlying tension plate member establishing a transversely disposed oppositely opening receiver passage therebetween,
a pair of release pins retractably carried in laterally spaced openings to enter the passage,
opposite coupling tongues received into opposite end portions of the passage and with openings therein releasably engaged by said release pins respectively,
and a spring biased lever means having a lever with a fulcrum bearing on the tension plate at the juncture of the exposed lever and head engageable with and to simultaneously lift said pair of release pins.

4,302,050
TRUCK HOIST
Eldon D. Jones, R.R. 2, Lake Crystal, Minn. 56055
Filed Oct. 17, 1979, Ser. No. 85,557
Int. Cl.³ B60P *1/20*
U.S. Cl. 298—22 J **20 Claims**

1. A hoist mechanism for use in raising and lower a dump bed pivotally connected to a vehicle chassis, said hoist mechanism comprising:
a first and a second lifting arm connected at a first pivot point, said first lifting arm having a second pivot point at one end thereof, said second lifting arm having an engaging pivoting stop means located on one end thereof for increasing the effective length of said second lift arm when said second lift arm forms a predetermined angle with respect to said first lift arm; and
an extensible and retractable hydraulic cylinder means connected to said second lifting arm;
said hydraulic cylinder means and said pivoting stop means being so arranged that upon initial extension of said cylinder means, said first lifting arm remains stationary relative to said second pivot point as said second lifting arm rotates

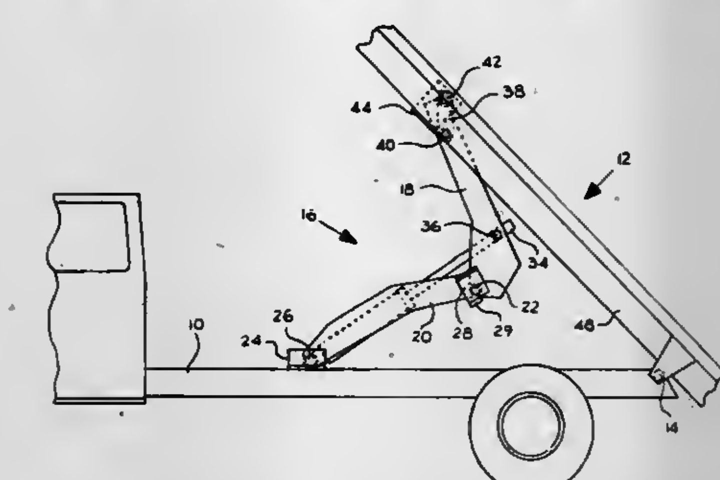

around said first pivot point until said second lifting arm reaches said predetermined angle with respect to said first lifting arm,
said pivoting stop means being so located that when said second lifting arm reaches said predetermined angle said second arm's effective length is increased and thereafter as said angle is exceeded said pivoting stop means causes said first lifting arm to rotate around said second pivot point upon further extension of said hydraulic cylinder means thereby to increase the rate of lifting of the dump bed relative to the amount of cylinder extension.

4,302,051
OPEN SURFACE FLOTATION METHOD
Dan M. Bass, Golden, and Fun-Den Wang, Lakewood, both of Colo., assignors to The United States of America as represented by the Secretary of the Interior, Washington, D.C.
Filed Sep. 13, 1979, Ser. No. 75,385
Int. Cl.³ E21B *43/24;* **E21C** *41/10*
U.S. Cl. 299—2 **10 Claims**

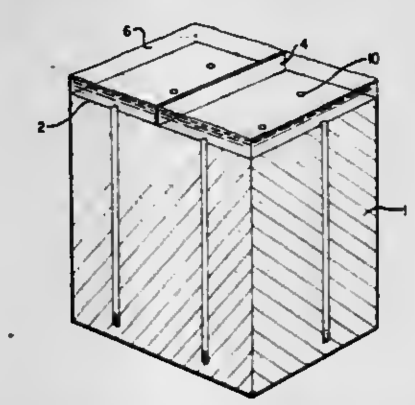

1. A method for the in situ removal of hydrocarbonaceous material from an earth formed reservoir of said material located within the earth, said method comprising the steps of:
introducing hot water upon at least a portion of a top surface of said reservoir forming a layer of hot water above said top surface and in contact therewith,
injecting a heated fluid into said reservoir, where the earth formation thereof remains in situ, and the viscosity of said material is lowered by heat from said fluid and water, whereby said water moves down in said formation and said material of lowered viscosity is driven upwardly with displacement thereof being through said formation and said layer of water to and above the surface of said water layer, and
collecting said displaced material from said surface of said water layer.

4,302,052
MODULAR HYDRAULIC MINING TOOL WITH SLURRY INLET METERING
William Fischer, Fullerton, Calif., assignor to Chem-Struct Corporation, Orange, Calif.
Filed Oct. 7, 1980, Ser. No. 194,834
Int. Cl.³ E21C *45/00*
U.S. Cl. 299—67 **19 Claims**

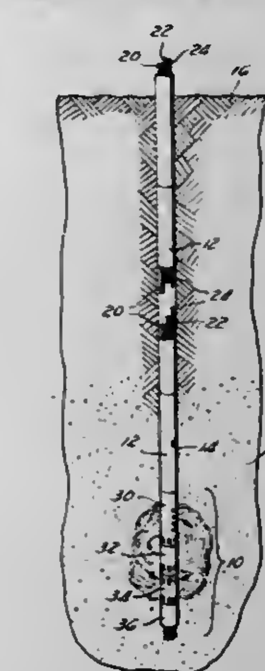

1. An improved hydraulic mining tool for recovering mineral bearing materials from subterranean deposits comprising:
a cylindrical casing formed of plural discrete modules, each sized to be received within a bore hole formed in said subterranean deposit;
a hydraulic cutting jet and an eductor pump disposed within a first one of said plural modules;
a radial inlet formed on a second one of said plural modules to direct said mineral bearing material radially into the interior of said casing;
an axial inlet formed on a third one of said plural modules to direct said mineral bearing material axially within the interior of said casing; and
common mounting means formed on each of said modules for interchangeably connecting said plural modules in a selective coaxial orientation adapted to meet the particular formation consistency of said subterranean deposit.

4,302,053
MOUNTING BLOCK TO ROTATE COAL CUTTER BITS
Wallace W. Roepke, Excelsior, and Richard J. Wilson, Minneapolis, both of Minn., assignors to The United States of America as represented by the Secretary of the Interior, Washington, D.C.
Filed Feb. 23, 1980, Ser. No. 114,536
Int. Cl.³ E21C *35/18*
U.S. Cl. 299—86 **3 Claims**

1. A combined mounting block and rotatable coal cutting bit assembly comprising:
a mounting block having an axial bore therein;
a bit holder mounted in said bore and capable of being moved axially therein between a first and second position;
a coal cutting bit rigidly fixed in the bit holder and movable in unison axially therewith, said bit having a cutting end extending from the bore;
a Belleville-type disk spring located in the block's bore

remote from the bit's cutting end to bias the holder and bit outwardly from the bore;

means to retain the bit holder and bit in the bore against the biasing action of the spring;

a groove guide in the bit holder near the end opposite the bit's cutting end; and

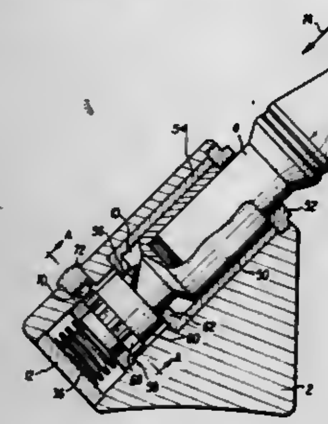

bit holder control means for engaging the groove and allowing the bit holder and bit to rotate and index as the holder moves from its first to second axially position, said control means preventing the bit holder and bit from rotating when the bit holder moves from its second to first position.

4,302,054

CUTTER UNIT ASSEMBLIES FOR EXCAVATING MACHINES AND TO EXCAVATING MACHINES INCLUDING CUTTER UNIT ASSEMBLIES

Francis A. Haskew; Leslie A. Jones, both of Burton-on-Trent; Alan R. Morris, Eggington; Miklos Tothfalusi, and Derek Plummer, both of Burton-on-Trent, all of England, assignors to Coal Industry (Patents) Limited, London, England

Filed Nov. 30, 1979, Ser. No. 99,097

Claims priority, application United Kingdom, Dec. 15, 1978, 48636/78

Int. Cl.³ E21D *9/08*

U.S. Cl. 299—31 **9 Claims**

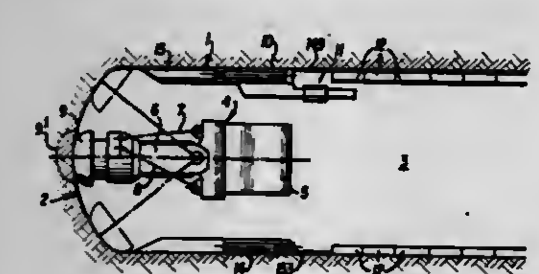

1. An excavating machine for excavating rock from a working face to extend an underground roadway or tunnel, comprising a stay unit anchorable in the roadway or tunnel and having a slideway which when the stay unit is installed in the roadway or tunnel extends longitudinally along the roadway or tunnel, and a cutting unit assembly slidably supported on said stay unit comprising a body and a boom adapted to carry a rotary cutter for excavating rock from the working face, the body comprising a non-rotary portion presenting annular support means which are arranged generally coaxially with the longitudinal axis of the roadway or tunnel, and a rotary portion provided with a pivotal mounting for pivotally supporting the boom and having annular supported means for cooperation with the annular support means of the non-rotary portion of the body, one of the portions comprising a single gear ring assembly for drivable engagement by at least one driven gear wheel to rotate the rotary portion relative to the non-rotary portion, the annular support means, the annular supported means and the gear ring assembly substantially located adjacent to a radially outer margin of the body and in a common transversely extending plane, the non-rotary portion of the body further comprising a slide arrangement for slideable engagement with said slideway of the stay unit, the pivotally mounted boom having driven means for rotating the cutter, said cutting unit being slidable with respect to said stay unit whereby said cutting unit is advanced against a surface to be cut, cutting said surface to sump said cutting unit, means for urging said cutting unit away from said stay unit in opposition to cutting forces on said cutter only during the time said cutting unit is sumping into said surface, and means for fixing the position of said non-rotating portion with respect to said stay unit after said cutting head is aumped with respect to said surface.

4,302,055

WEDGINGLY MOUNTED TOOL HOLDER OR ADAPTER FOR A CUTTING HEAD

Anders E. Persson, Sandviken, Sweden, assignor to Sandvik Aktiebolag, Sandviken, Sweden

Continuation-in-part of Ser. No. 881,603, Feb. 27, 1978, Pat. No. 4,180,292. This application Aug. 8, 1979, Ser. No. 64,770

The portion of the term of this patent subsequent to Dec. 25, 1996, has been disclaimed.

Int. Cl.³ E21C *35/18*

U.S. Cl. 299—93 **25 Claims**

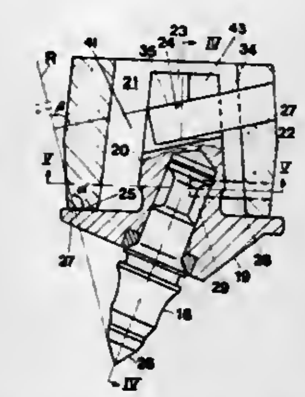

7. A planing machine for pavement profiling comprising:

a rotating drum having a helical ring mounted thereon and having a single rotational direction,

a tool mounting on said ring, said tool mounting having an elongated outwardly open groove extending in the rotational direction of said drum,

a first contact surface on said tool mounting, and

a second contact surface on said tool mounting, a major portion of said first contact surface being located in said groove at one side of a central plane through said ring,

said first and second contact surfaces being opposed and converging in the rotational direction of said drum for securing thereto by wedge action a cutting tool having corresponding contact surfaces.

4,302,056

DUAL TYPE HYDRAULIC BRAKING SYSTEM FOR A VEHICLE

Hiroshi Kawaguchi, Mishima, Japan, assignor to Toyota Jidosha Kogyo Kabushiki Kaisha, Toyota, Japan

Continuation of Ser. No. 883,855, Mar. 6, 1978, abandoned. This application Jan. 23, 1980, Ser. No. 114,650

Claims priority, application Japan, Nov. 19, 1977, 52-139129

Int. Cl.³ B60T *13/00*

U.S. Cl. 303—6 C **10 Claims**

1. A dual type hydraulic braking system for a vehicle, the system comprising, in combination; (1) a master cylinder having a pair of pressure chambers for delivering the braking pressure generated therein through two mutually independent circuits to rear and front wheel cylinders disposed on each of front and rear vehicle wheels, and (2) a control valve assembly including a pressure control valve, disposed in at least one of said circuits, said pressure control valve having:

(i) a first piston mounted therein for controlling the braking pressure of at least one of said rear wheel cylinders so that it may be, within the sphere of exceeding a predetermined pressure, proportionate to the pressure of the master cylinder at a proportion constant less than one;

(ii) a second piston mounted in said pressure control valve, and having a large diametered portion and a small diametered portion, said second piston positioned in such manner that an end surface of said small diametered portion thereof is to be abutted to said first piston in an air chamber, said second piston affected, at one end surface, adjacent to said small diametered portion, of said large diametered portion, by hydraulic pressure of that one of said independent circuits other than that one of said circuits in which said pressure control valve is contained, said second piston facing another air chamber at the opposite end surface of said large diametered portion; and

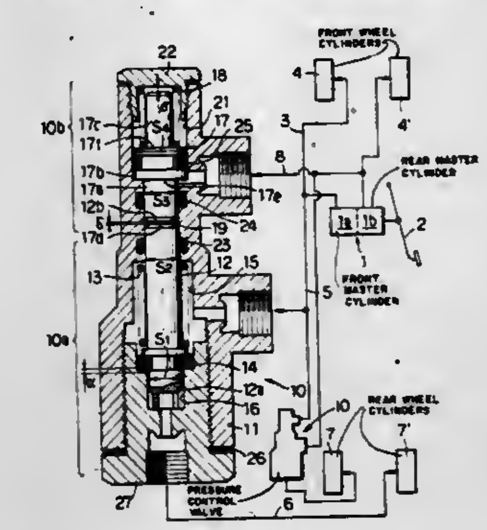

(iii) a spring means constantly biasing said second piston toward said first piston,

(iv) wherein in that among five values of (a) cross-sectional area (S_3) of the small diametered portion of said second piston, (b) cross-sectional area (S_4) of the large diametered portion of second piston, (c) the set load (F_2) of said spring means biasing said second piston, (d) starting pressure (P_0) of the pressure control operation by said first piston and (e) predetermined pressure (P_1) selected within a normal range higher than said starting pressure, the following inequality can be established:

$$P_1 \cdot (S_4 - S_3) > F_2 > P_0 \cdot (S_4 - S_3),$$

whereby, in case of both said circuits allowing normal pressure rising, said second piston moves in a separating direction from said first piston after said first piston has begun the pressure controlling operation.

4,302,057

PNEUMATIC CONTROL VALVE

Harold Durling, Elsie, Mich., assignor to Midland-Ross Corporation, Cleveland, Ohio

Filed Dec. 27, 1979, Ser. No. 107,703

Int. Cl.³ B60T *15/16*

U.S. Cl. 303—7 **47 Claims**

43. A valve which is adaptable to a device for moving a part thereof, comprising:

(a) a housing having a chamber with a longitudinal axis;

(b) a gas impervious member reciprocable in the chamber along the axis thereof, the member being generally in a plane which is normal to the axis to transversely divide the chamber into a pair of smaller chambers separated by the member;

(c) an inlet disposed in the housing and communicating with at least one of the smaller chambers, and through which gas is circulated to the at least one of the chambers;

(d) means coupled to the member and movable, in unison, therewith to engage and move the part when the member correspondingly moves in the direction of the part;

(e) means for allowing the circulation of gas, under pressure,

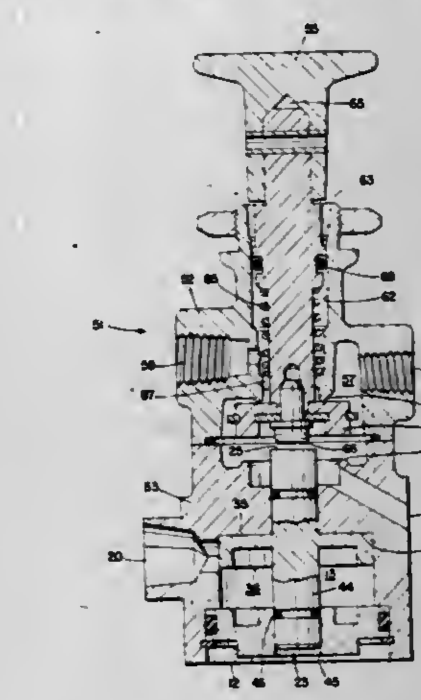

between the smaller chambers to equalize a force suddenly exerted against the member in one of the smaller chambers by differential gas pressure in the smaller chambers.

4,302,058

VARIABLE LOAD VALVE DEVICE

Minoru Nagase, and Shigeaki Doto, both of Kobe, Japan, assignors to Nippon Air Brake Co., Ltd., Kobe, Japan

Filed Feb. 25, 1980, Ser. No. 124,209

Int. Cl.³ B60T *8/18*

U.S. Cl. 303—22 A **7 Claims**

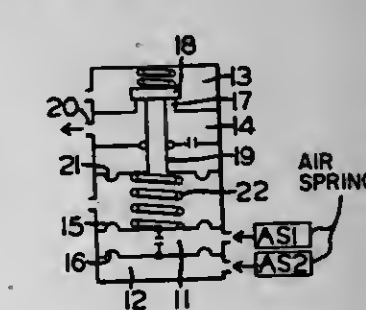

1. For a vehicle having air springs to support the vehicle load, there is provided a load responsive valve device having input, output and exhaust ports, said load responsive valve device comprising:

(a) valve means for establishing fluid pressure communication between said input and output ports in a first position and between said output and exhaust ports in a second position, and for terminating said fluid pressure communications in an intermediate position between said first and second positions;

(b) a first piston abutment subject to fluid pressure of at least one of said air springs representative of the vehicle load;

(c) means for transmitting the fluid pressure force exerted by said first piston abutment to said valve means to urge movement thereof toward said first position;

(d) a second piston abutment subject to fluid pressure effective at said output port for urging said valve means toward said second position in opposition to said fluid pressure force exerted by said first piston abutment, said valve means assuming said intermediate position when the pres-

sure at said output port corresponds to the vehicle load condition; and

(e) said first piston abutment comprising at least two pistons having equal effective pressure areas arranged separately in tandem relationship, adjacent sides of said at least two pistons being subject to the fluid pressure of a first one of said air springs and the side opposite said adjacent side of one of said at least two pistons being subject to the fluid pressure of a second one of said air springs, so that the higher fluid pressure of said first and second air springs is effective to establish the fluid pressure at said output port in accordance with the vehicle load condition.

4,302,059
LINEAR GUIDE SLIDE BEARING UNIT
Hiroshi Teramachi, 2-34-8, Higashi-Tamagawa, Setagaya-ku, Tokyo, Japan (158)
Filed Feb. 11, 1980, Ser. No. 120,279
Claims priority, application Japan, Feb. 14, 1979, 54/15910
Int. Cl.[3] F16C *29/06*
U.S. Cl. 308—6 C **2 Claims**

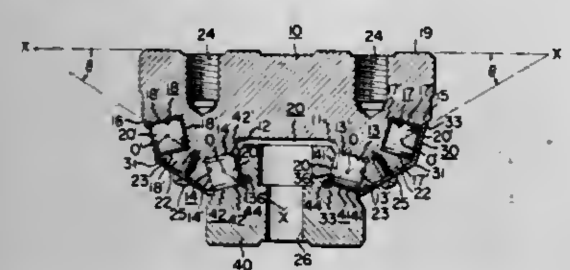

1. A linear guide slide bearing unit, comprising:
a bearing body having a pair of downward projections at opposite sides thereof and provided with a pair of sectionally right-angled parallel V-grooves formed on inclined load-carrying wall surfaces on the inner side of said projections and a pair of sectionally square U-grooves formed on non-load-carrying wall surfaces on the outer side of said bearing body in parallel relation with said V-grooves;
a track shaft having a pair of sectionally right-angled V-grooves at opposite sides thereof in parallelly confronting relation with said V-grooves on said bearing body;
a number of rollers received in said V- and U-grooves in alternately 90° shifted positions and each having chamfered surfaces at opposite ends thereof; and
retainers fixed on said projections of said bearing body, forming endless roller guide tracks in cooperation with said V- and U-grooves, each retainer having an inner edge portion engageable with said chamfered surfaces of said roller for guiding the rollers along said guide track from a load-carrying region to a non-load-carrying region or vice versa.

4,302,060
FLUID FILM POCKET BEARING
John C. Nicholas, 1779 Chester Rd., Apt. 1, Bethlehem, Pa. 18017, and Robley G. Kirk, 143 Applewood Dr., Easton, Pa. 18042
Filed Nov. 8, 1979, Ser. No. 92,357
Int. Cl.[3] F16C *32/06*
U.S. Cl. 308—9 **24 Claims**

1. A fluid-film, pocket bearing, for journaling a rotary shaft, comprising:
an annulus having inner and outer circumferential surfaces, and an axial center;
means defining a plurality of bearing pads on said inner surface;
means communicating said inner and outer surfaces, for admitting fluid to said inner surface; and
relieved pockets formed in said inner surface; wherein
said pockets comprise means for effecting loading of said bearing predominantly horizontally thereof;
said pockets each have a substantially uniform depth, throughout a substantial cicumferential length thereof, and leading and trailing edges, relative to a rotary direction of a given shaft to be journaled by said bearing;

one of said edges is defined by diminishing depths which blend commonly into one of said bearing pads; and
the other of said edges is defined by an abrupt, recessed step of said uniform depth.

4,302,061
REMOVABLE MAGNETIC SUSPENSION SYSTEM
Maurice Brunet, Vernon, France, assignor to Societe Europeenne de Propulsion, Puteaux, France
Continuation-in-part of Ser. No. 867,225, Jan. 6, 1978, abandoned. This application Oct. 24, 1979, Ser. No. 87,888
Claims priority, application France, Jan. 13, 1977, 77 0092
Int. Cl.[3] F16C *39/06*
U.S. Cl. 308—10 **9 Claims**

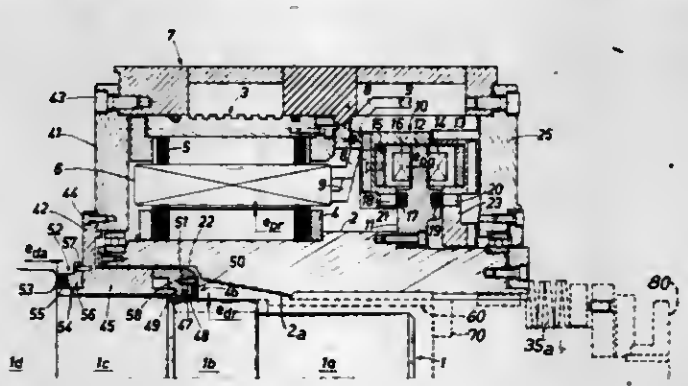

1. A removable suspension system for a rotor that revolves with respect to a stationary assembly, comprising:
(a) a sleeve removably engaged on said rotor and maintained selectively affixed thereto by gripper means;
(b) at least one electromagnetic bearing including a bearing armature supported by said sleeve and a stator mounted on a fixed support in operative position with respect to said bearing armature;
(c) at least one electromagnetic rotor-position detector mounted on said fixed support independently from said at least one electromagnetic bearing, for controlling said electromagnetic bearing, said electromagnetic rotor-position detector including:
(i) a reference surface formed on said rotor, said reference surface constituting a detector armature for said at least one electromagnetic rotor-position detector; and
(ii) a stator removably mounted on said fixed support disposed directly opposite said reference surface on said rotor and independent from said sleeve.

4,302,062
TURBINE BLADE SUPPORT
Alexander D. Hunter, Jr., Madison, and William T. Dennison, East Hartford, both of Conn., assignors to United Technologies Corporation, Hartford, Conn.
Filed Sep. 20, 1979, Ser. No. 77,459
Int. Cl.[3] F16C *19/52, 32/00*
U.S. Cl. 308—22 **6 Claims**

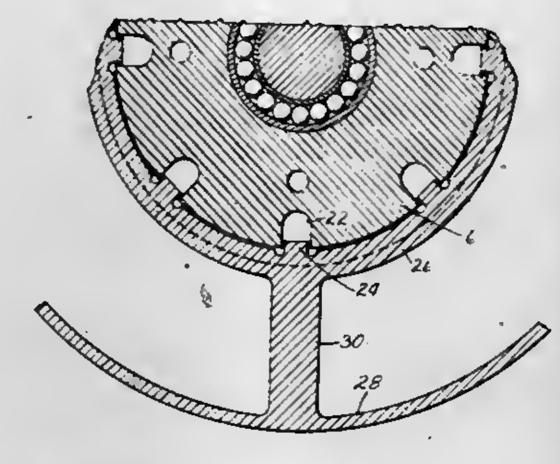

1. A bearing support device for a gas turbine engine including:
a support structure forming part of the stationary part of the engine and including outer and inner wall elements;
inwardly extending bosses on the inner wall element; and
a bearing support ring within and spaced from said support structure, said ring having circumferentially spaced recesses to receive the bosses and constructed for radial movement of the bosses in the recesses to permit relative radial expansion, the bases of the recesses being scallop-shaped.

4,302,063
METHOD FOR VAPORIZING GETTER MATERIAL IN A VACUUM ELECTRON TUBE
William G. Rudy, Lancaster, Pa., assignor to RCA Corporation, New York, N.Y.
Filed Feb. 28, 1980, Ser. No. 125,646
Int. Cl.[3] H01J *7/18*
U.S. Cl. 316—25 **8 Claims**

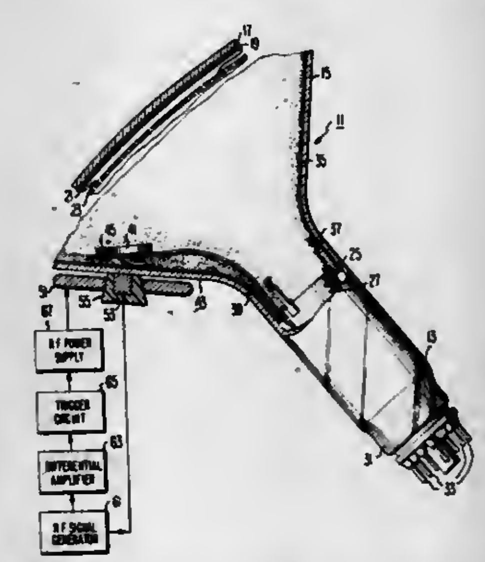

1. In a method for vaporizing getter material from a getter container located inside and adjacent the inner surface of the envelope of a vacuum electron tube, said method including
(i) positioning an induction coil adjacent the outer surface of said envelope opposite said getter container
(ii) and energizing the positioned induction coil so as to heat said getter container and to vaporize said getter material therefrom,
the improvement comprising
(a) sensing the location of the getter container from outside said envelope,
(b) generating signals which indicate the location of said container
(c) and using said signals to control said energizing step.

4,302,064
DETACHABLE COUPLING FOR PRESSURE-MEDIUM-FILLED HF LINES
Georg Spinner, Am Eichberg 12, 8152 Feldkirchen-Westerham 1, Fed. Rep. of Germany
Filed Jun. 6, 1979, Ser. No. 46,155
Claims priority, application Fed. Rep. of Germany, Jun. 16, 1978, 2826478
Int. Cl.[3] H01R *17/12*
U.S. Cl. 339—16 C **8 Claims**

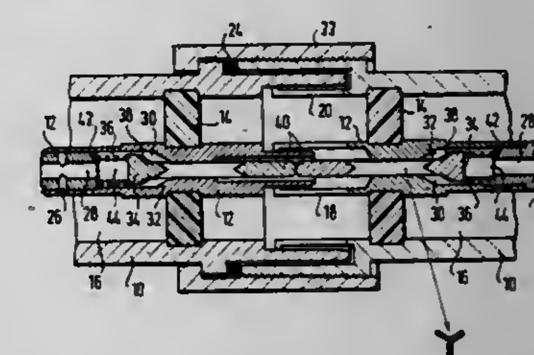

1. A detachable coupling for a coaxial line containing a pressurized gas, said coupling comprising:
a first coaxial line having a first inner conductor and a first outer conductor and having a first end;
a second coaxial line having a second inner conductor and a second outer conductor and having a second end;
said first and second inner conductors being filled with a gas under pressure;
said first and second ends being joinable to each other in such a manner as to connect said first and second inner conductors, and to connect said first and second outer conductors;
each of said coaxial lines having a respective insulating member at its respective said end for retaining said gas in said line under pressure;
each of said ends having a valve disposed in its respective said inner conductor, said valves defining a flow path connecting the interiors of said inner conductors when said ends are joined to each other and for maintaining the interiors of said inner conductors sealed from the atmosphere when said ends are not joined to each other; said valves operating automatically to open when said ends are joined and to close automatically when said ends are separated.

4,302,065
FLAT CABLE ASSEMBLY AND METHODS OF TERMINATING AND CONNECTORIZING THE CABLE OF SAME
Thomas J. Taylor, Gahanna, Ohio, assignor to Western Electric Company, Incorporated, New York, N.Y.
Filed Mar. 28, 1980, Ser. No. 135,033
Int. Cl.[3] H05K *1/04;* **H02G** *15/08*
U.S. Cl. 339—17 F **35 Claims**

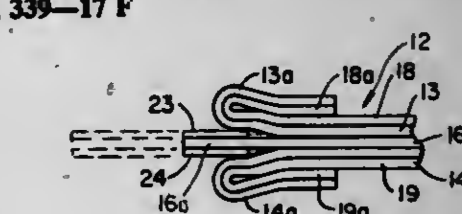

1. A flat cable assembly comprising:

a connector having two underlying/overlying arrays of laterally disposed cable conductor-mating elements supported by an associated housing, and

a flat cable of given length having two laterally disposed, underlying/overlying arrays of conductors separated by an insulative center film, with the conductors in each array being respectively interposed between a different side of the center film and a respectively associated one of two insulative outer films, also wherein two laterally disposed isolating strips of insulative material are respectively located and aligned on opposite sides of said center film, thus being interposed between the latter film and the adjacent one of said two arrays of conductors at the terminated end of said cable, as fabricated, said isolating strips being of of a material that only selectively adheres to said center film and associated outer film, the latter having said associated array of conductors bonded thereto, and further wherein a short longitudinally disposed end section of each outer film, and the co-extensive array of conductor end portions bonded thereto, are separated from at least said center film along a longitudinally disposed end region of the latter that at least initially was in contact with one of said isolating strips, by being sharply folded back on themselves, said conductor end portions in said two arrays thus being spaced further apart by at least the interposed folded back sections of the outer films, while still maintained in precise alignment, with each such folded-back conductor end portion in each array being electrically connected to a different aligned one of said mating connector elements of the associated array thereof in said connector.

4,302,066
SAFETY LOCKING MEANS FOR INDUSTRIAL GRADE ELECTRICAL CONNECTORS
Albert P. Newman, and Ronald A. Hertzer, both of Cincinnati, Ohio, assignors to Empire Products, Inc., Cincinnati, Ohio
Filed Aug. 7, 1979, Ser. No. 64,501
Int. Cl.³ H01R *13/639*
U.S. Cl. 339—82 **26 Claims**

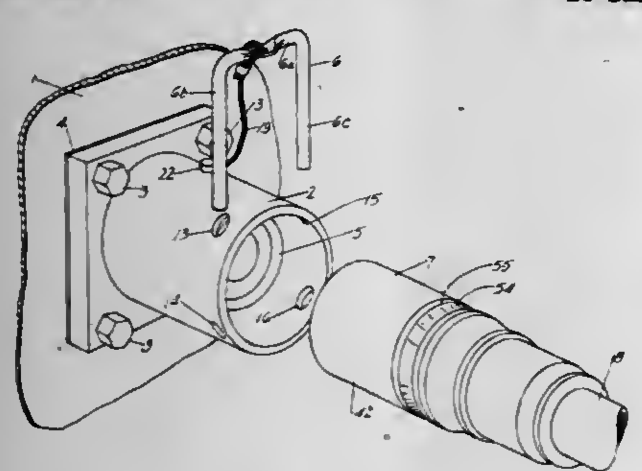

1. In an electrical connector assembly comprising a male connector with at least one male contact and a surrounding insulative housing and a female connector with at least one female contact and a surrounding insulative housing, said connectors being adapted to be mated at their forward ends with said at least one male contact in mated relationship with said at least one female contact and the forward ends of said insulative housings in mated relationship, the improvement comprising means to lock said connectors in said mated relationship, said locking means comprising a hollow shell having first and second open ends and a U-shaped clevis pin having a pair of legs connected at one end by a base portion, a first one of said connectors being partially insertable forward end foremost into said shell from said first end thereof, means to captively maintain said first connector in said shell, a second one of said connectors being partially insertable forward end foremost into said shell from said second end thereof and into mating relationship with said first connector, said shell near said second end thereof having first and second pairs of coaxial holes formed therein, each of said clevis pin legs being insertable in one of said first and second pairs of holes with that portion of each clevis pin leg extending between the holes of its respective pair thereof also extending into the interior of said shell and into engagement with said insulative housing said of second connector to lock said second connector in said shell and in said mating relationship with said first

4,302,067
EDGE CONNECTORS FOR CIRCUIT CARDS AND METHODS OF ASSEMBLY
Randy R. Monson, Indianapolis, and Robert L. O'Neal, Greenwood, both of Ind., assignors to Western Electric Company, Incorporated, New York, N.Y.
Filed Apr. 18, 1980, Ser. No. 141,499
Int. Cl.³ H01R *11/06*
U.S. Cl. 339—275 R **10 Claims**

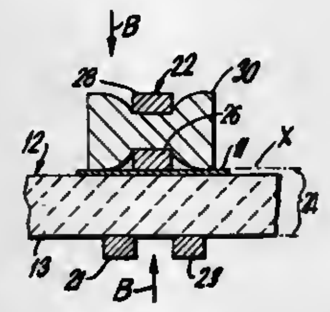

7. An improved edge connector for making electrical contact with a contact pad area along an edge of a circuit card, the edge connector being of the type including a spring clip having at least three resilient tines extending therefrom and arranged in a row, with the center tine being offset from the outer two tines so that the edge of the circuit card may be inserted between the three tines to pre-assemble the card and clip, with the card being held in place by spring action of the tines engaging portions of the card adjacent to the edge, and with the contact pad area to be connected being positioned adjacent to the center tine, the center tine carrying a solder preform to be melted after the clip and card have been pre-assembled so as to bond the clip to the pad area, wherein the improvement comprises:

the center tine having a generally C-shaped end portion crimped about the middle of the solder preform so as to deform the preform into a generally hourglass configuration, the center tine being located so that the ends of the preform are positioned in resilient engagement with portions of the contact pad area to be soldered when the card and clip have been pre-assembled.

4,302,068
INFRARED REFLEX DEVICE
Jesse F. Tyroler, Randolph, N.J., assignor to The United States of America as represented by the Secretary of the Army, Washington, D.C.
Filed Mar. 24, 1980, Ser. No. 133,033
Int. Cl.³ G02B *5/22*
U.S. Cl. 350—1.1 **11 Claims**

1. An infrared reflex device for stimulating infrared images comprising:

a latticed panel having a first and second plurality of exposed elements, said first plurality of elements having over a predetermined infrared spectrum a spectral emissivity substantially less than soil, said first plurality being a reflector of infrared radiation, said second plurality having a greater spectral emissivity and lesser reflectivity than said first plurality over said predetermined infrared spectrum said second plurality includes:

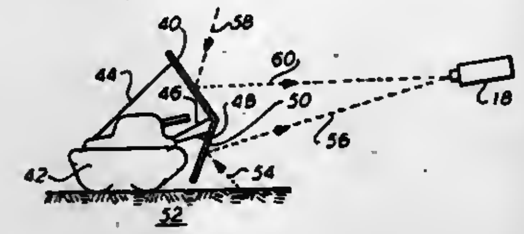

an open pattern whereby an instrument having resolution insufficient to distinguish the details of said pattern would perceive it as a uniform surface.

4,302,069
ILLUMINATION SYSTEM AND APPARATUS THEREFOR
Gary A. Niemi, Plano, Tex.
Division of Ser. No. 830,570, Sep. 6, 1977, Pat. No. 4,152,752. This application Dec. 29, 1978, Ser. No. 974,150
Int. Cl.³ G02B *5/14*
U.S. Cl. 350—96.15 **3 Claims**

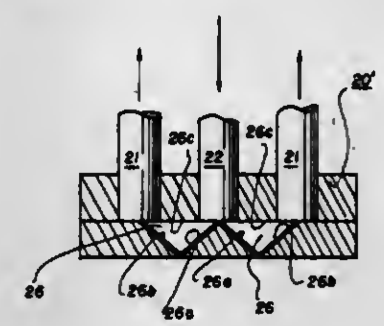

1. Light splitter means for distributing light received from a source thereof along a plurality of light paths defined by respective light pipes, said light splitter means comprising:

(a) a housing (20') defining a central cavity (26) therein,

(b) a centrally located light pipe (22) directing light from said source into the central cavity (26) along an incoming optical path,

(c) a plurality of spaced light pipes (21) in optical communication with said cavity (26), each spaced light pipe (21) being radially equidistant and oriented parallel to said centrally located light pipe for transmitting light away from said housing cavity along an outgoing optical path parallel to the incoming optical path,

(d) reflector means within said housing receiving the direction of light received from said first means centrally located light pipe (22) and directing said light into said radially spaced light pipes (21), said reflector means having a conical central portion (26*a*) disposed in the incoming optical path and an adjacent outer portion having a reflective surface (26*b*) transversely disposed in each respective outgoing optical path.

4,302,070
OPTOELECTRONIC SEMICONDUCTOR DEVICE HAVING AN OPTICAL FIBER CONNECTOR
Takayuki Nakayama, Kawasaki; Nobuhiro Inagaki, Yokohama; Michio Ishihara, Yokohama, and Ryosuke Namazu, Yokohama, all of Japan, assignors to Fujitsu Limited, Kawasaki, Japan
Filed Aug. 6, 1979, Ser. No. 63,777
Claims priority, application Japan, Aug. 4, 1978, 53-94517
Int. Cl.³ G02B *5/14, 5/16*; H01L *27/14*
U.S. Cl. 350—96.19 **15 Claims**

1. An optoelectronic semiconductor device for optical connection with an optical transmission fiber comprising:

(a) an optoelectronic semiconductor element;

(b) a stem for mounting the optoelectronic semiconductor thereon;

(c) an optical fiber optically communicating with the optoelectronic semiconductor element;

(d) a cap secured to the stem for containing the optical fiber therein;

(e) a projection formed on the top portion of the cap and wherein the face of a first end of the optical fiber is exposed on the top surface of the projection and the face of a second end of the optical fiber is positioned adjacent the optoelectronic semiconductor element;

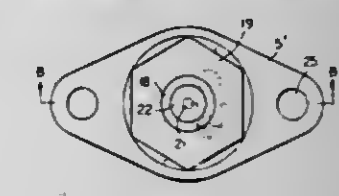

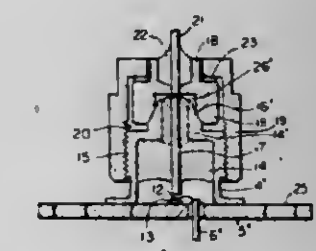

(f) a screw formed on the external side surfaces of the cap; and

(g) nut means engageable with the screw for optically connecting the optical transmission fiber to the optical fiber, wherein said nut means comprises (i) a hollow nut member having an inner threaded portion for engagement with the screw and (ii) an inside member provided inside the hollow nut member, secured to an end of the optical transmission fiber, and having a recess formed in the inside member in a shape compatible with the shape of the projection for mating with and insertion of the projection therein.

4,302,071
ADJUSTABLE DIRECTIONAL COUPLER FOR LIGHT WAVEGUIDES
Gerhard Winzer, Munich, Fed. Rep. of Germany, assignor to Siemens Aktiengesellschaft, Berlin & Munich, Fed. Rep. of Germany
Filed Nov. 23, 1979, Ser. No. 96,919
Claims priority, application Fed. Rep. of Germany, Dec. 13, 1978, 2853800
Int. Cl.³ G02E *1/01*
U.S. Cl. 350—96.20 **9 Claims**

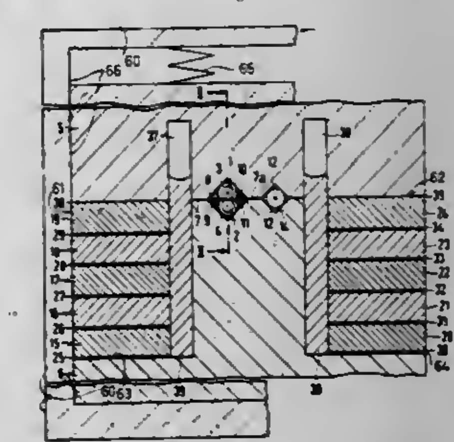

1. A directional coupler for the coupling of a light signal traveling in a light conducting core of one light waveguide to the light conducting core of a second light waveguide with an

adjustable ratio of the amount of coupling therebetween, said coupler comprising a pair of support members for mounting each waveguide in a fixed position along a coupling segment, each of the support members having a plane parallel surface facing each other, each of said plane parallel surfaces having means for receiving and holding the waveguide with the waveguides being substantially parallel in the coupling segment and the waveguides being embedded in a medium with an index of refraction which is lower in comparison to the index of refraction of the cores of the waveguides, each of said support members being mounted for relative movement to each other from a first position with the waveguides in alignment with each other to a second position with the waveguides separated and displaced from each other, and means for moving the support members between said position in prescribed amounts to change the ratio of the light signal coupled from one waveguide into the other waveguide so that when said support members are in said first position, said waveguides are in alignment with each other with the core close together and the plane parallel surfaces are substantially abutting each other.

4,302,072

DEVICE FOR TAPPING SCATTERED LIGHT FROM A JOINT IN AN ADJUSTABLE CONNECTOR FOR TWO OPTICAL FIBRE WAVEGUIDES

Viesturs J. Vucins, Tyresö, Sweden, assignor to Telefonaktiebolaget L M Ericsson, Stockholm, Sweden

Continuation of Ser. No. 877,128, Feb. 13, 1978, abandoned. This application Sep. 21, 1979, Ser. No. 77,789

Claims priority, application Sweden, Feb. 25, 1977, 7702118

Int. Cl.³ G02B *7/26*

U.S. Cl. 350—96.21 8 Claims

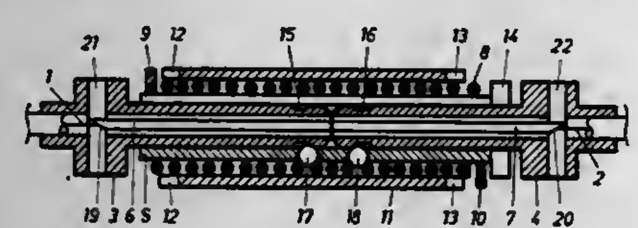

1. A device for controlling the concentricity of two cylindrical optical fibre waveguides in a joint in an adjustable connector comprising: a first cylindrical jointing tube for one of the fibre waveguides; a second cylindrical jointing tube for the other of the fibre waveguides; a jointing sleeve disposed about said jointing tubes and rotatably receiving the same; at least one capillary cylindrical tube of transparent material disposed about one of the fibre waveguides, said capillary tube having an oblique angled surface at the end thereof which is remote from the joint for laterally projecting scattered light propagated from the joint; and adjustable connector means connecting said jointing tubes in said jointing sleeve to permit relative rotation of said jointing tubes with respect to said sleeve for adjusting eccentricity of said fibre waveguides, the jointing tube surrounding said capillary tube being provided with a side window for accessing laterally projected light from said capillary tube to enable adjustment of the jointing tubes in said sleeve under the control of the laterally projected light.

4,302,073

OPTICAL FIBRE WITH A PROTECTIVE COVERING

Jacques Bendayan, and Robert Jocteur, both of Lyons, France, assignors to Les Cables de Lyon S.A., Lyons, France

Continuation-in-part of Ser. No. 854,743, Nov. 25, 1977, abandoned, which is a continuation of Ser. No. 718,199, Aug. 26, 1976, abandoned. This application May 9, 1979, Ser. No. 37,484

Claims priority, application France, Sep. 19, 1975, 75 28807

Int. Cl.³ G02B *5/172*

U.S. Cl. 350—96.23 4 Claims

1. An optical fiber comprising: a silica core covered with a silica cladding of a refractive index lower enough than the refractive index of said core to inhibit light from entering said cladding from said core; said optical fibre having a mechanical protective covering of a plastic material passing rapidly from liquid state to solid state, being obtained by extrusion through a draw plate around a punch through which the optical fibre is passed; said draw plate and punch having calibrating parts, with the calibrating part of the punch protruding beyond the

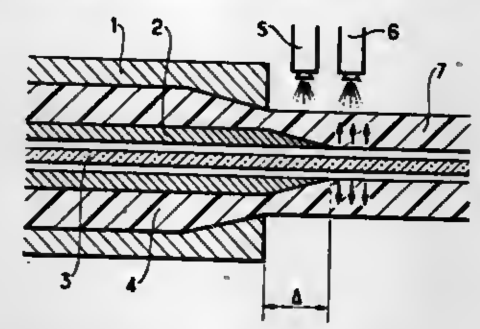

calibrating part of the draw plate about 0.5 mm to 1 mm; and the extruded plastic material having been submitted at the outlet of the calibrating part of the draw plate to a very rapid cooling and thereby to centrifugal shrinkage, whereby a substantial radial clearance is formed between the silica cladding and the covering of between 1 and 10 microns, but for pinpoint contacts at spaced locations between said cladding and said covering.

4,302,074

ALUMINUM METAPHOSPHATE OPTICAL FIBERS

James W. Fleming, Jr., Fanwood, and John W. Shiever, Cedar Grove, both of N.J., assignors to Bell Telephone Laboratories, Incorporated, Murray Hill, N.J.

Filed Apr. 2, 1979, Ser. No. 26,410

Int. Cl.³ C03B *37/075;* G02B *5/172*

U.S. Cl. 350—96.34 9 Claims

1. An optical fiber comprising a core and a cladding, the said fiber comprising aluminum metaphosphate, and in which fiber the molar ratio of aluminum to phosphorus is given substantially by the formula $Al(PO_3)_3$.

4,302,075

DEVICE FOR SPLITTING THE LIGHT BEAM INCIDENT

Kazuya Matsumoto, Yokohama, and Susumu Matsumura, Kawasaki, both of Japan, assignors to Canon Kabushiki Kaisha, Tokyo, Japan

Filed Feb. 28, 1980, Ser. No. 125,581

Claims priority, application Japan, Mar. 6, 1979, 54-25930

Int. Cl.³ G02B *27/14*

U.S. Cl. 350—171 5 Claims

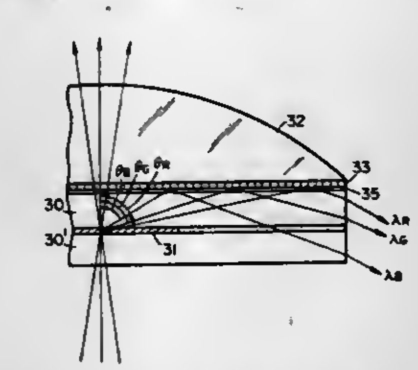

1. An optical device for splitting a light beam incident thereon, comprising:

a first optical portion constructed to perform at least one optical function;

a second optical portion in a part of which is provided a diffraction lattice structure for diffracting part of the light beam incident thereon; and

a lower index layer provided between said first and second optical portions, and having a low refractive index sufficient to totally reflect the diffracted light out of the incident light path;

wherein said first and second portions and said lower index layer are integrally interconnected.

4,302,076

OPTICAL ELEMENT MOUNTING DEVICE

Shigeru Hashimoto, Yokohama, Japan, assignor to Canon Kabushiki Kaisha, Tokyo, Japan

Filed Mar. 27, 1979, Ser. No. 24,254

Claims priority, application Japan, Apr. 12, 1978, 53-48137[U]

Int. Cl.³ G02B *7/02*

U.S. Cl. 350—252 3 Claims

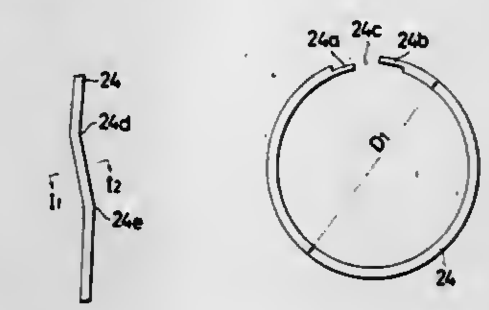

1. An optical components mounting assembly comprising, in combination: means defining an optical axis; a holding body including means defining a reference position relative to the direction of said optical axis for an optical component mounted in said assembly, said holding body having an inner circumferential surface; a holding ring consisting essentially of resilient material inserted within said holding body in resilient contact against said inner circumferential surface, said ring being formed as a discontinuous body having an overlapping portion with engageable steps, said discontinuous body having a pair of ends at said overlapping portion with a gap therebetween and with parts thereof bent in the direction of said optical axis for imparting a resilient effect to press said optical component; and a tightening member operatively engaged with said holding body to apply to an optical component mounted therein a mounting force applied in the direction of said optical axis said tightening member being inserted inside of said holding body and being arranged to press said holding ring in the direction of said optical axis to bring one side of said holding ring into contact with the inner circumferential face of said holding body thereby to maintain said optical components in their predetermined positions with said holding body.

4,302,077

BAYONET DEVICE FOR LENS BARREL

Akira Sato, Ohme, and Takashi Isobe, Tokyo, both of Japan, assignors to Canon Kabushiki Kaisha, Tokyo, Japan

Filed Sep. 25, 1979, Ser. No. 78,770

Claims priority, application Japan, Sep. 29, 1978, 53-120490; Nov. 2, 1978, 53-135198

Int. Cl.³ G02B *7/02*

U.S. Cl. 350—257 4 Claims

1. A lens barrel bayonet device for enabling a lens barrel to be bayonet mounted to a camera body, said device comprising:

(a) a first bayonet ring having a flange portion for securing said device to a camera lens barrel, and first bayonet claw portions and first cut-away portions cooperatively arranged on said first ring to be in bayonet coupling relationship with an external camera body bayonet device;

(b) a second bayonet ring having second bayonet claw portions and second cut-away portions arranged to coincide with the bayonet claw and cut-away portions of said first ring, said second ring being securely seated within the flange portion of said first ring so that a spring seat is defined by adjacent ones of said first and second claw portions; and

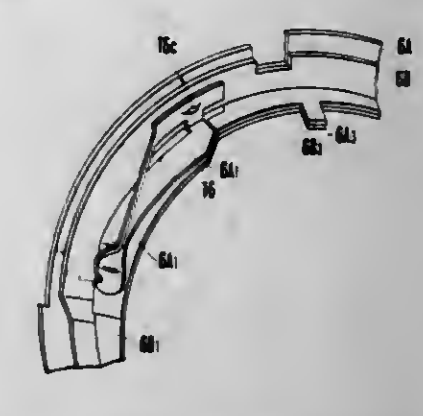

(c) a spring member located in said spring seat for engaging the camera body bayonet device to urge the lens barrel in axial and radial directions relative to the optical axis thereof when the lens barrel is mounted to the camera body.

4,302,078

PHOTOGRAPHIC FILTER HOLDER WITH THREADED ADAPTER

David M. Stravitz, New York, N.Y., assignor to Amblco Inc., Lynbrook, N.Y.

Filed Oct. 18, 1979, Ser. No. 86,055

Int. Cl.³ G02B *7/00*

U.S. Cl. 350—318 9 Claims

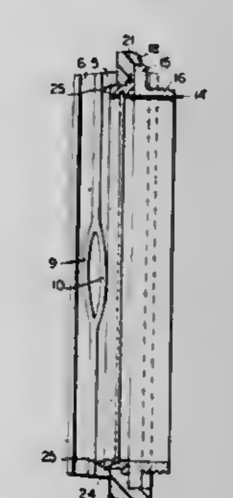

1. A filter holder for photographic applications comprising:

a main plate-like body portion (1) having an opening (2) therein;

means (3,4) coupled to said body portion (1) and defining at least one channel (5-8) on one side of said body portion (1) and at least one channel (12,13) on the opposite side of said body portion (1);

a threaded adapter (14) having a flange (15) for being removably received in said at least one channel on said opposite side of said body portion (1);

said body portion (1) comprising means (17,18) for retaining said adapter in said at least one slot into which it is inserted, said adapter being rotatable within said slot when retained therein;

a filter means (21) having a flange (23) and being shaped so as to conform to the shape of said opening (2) in said body portion (1);

said body portion (1) having a recess (19) coextensive with and adjacent said opening (2) for receiving said flange (23) of said filter means when inserted therein, said adapter

(14) having surface means overlying said recess (19) for retaining said filter means in said recess (19);
resilient retaining means (9,10) coupled with said at least one channel (5-8) on said one side of said body portion (1) for retaining a filter or photographic effect sheet or plate inserted into said at least one channel (5-8).

4,302,079
PHOTOLITHOGRAPHIC PROJECTION APPARATUS USING LIGHT IN THE FAR ULTRAVIOLET
Alan D. White, Berkeley Heights, N.J., assignor to Bell Telephone Laboratories, Incorporated, Murray Hill, N.J.
Filed Apr. 10, 1980, Ser. No. 139,022
Int. Cl.³ G02B *17/08*
U.S. Cl. 350—371 **11 Claims**

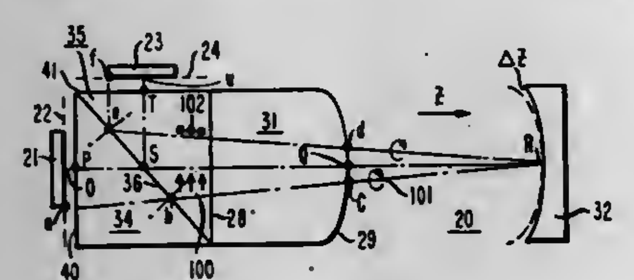

1. An image projection apparatus for radiation in the far ultraviolet, effective to project radiation from an object plane onto an image plane, comprising:
a polarizing beam-splitter plano-convex lens combination, the convex surface of said combination having its apex located on an optical path from said object plane to said image plane that is normal to said convex surface at its apex, said combination having a first planar surface proximate to said object plane, and a second planar surface proximate to said image plane;
an aspherical mirror, whose center of curvature is substantially coincident with the center of curvature of said convex surface, located on the convex side of said combination and centered on said optical path; and
means for inducing sufficient birefringence into said lens to cause quarter-wave retardation of radiation traversing the lens;
the distance along said optical path between said first surface and said apex of said second convex surface and the distance along said path from said apex of said convex surface to said second surface being mutually approximately equal to the radius of curvature of said convex surface.

4,302,080
EYE GLASSES
Walter H. Bononi, Zeppelinstrasse 9, 7012 Fellbach-Schmiden, Fed. Rep. of Germany
Filed May 22, 1978, Ser. No. 908,092
Claims priority, application Fed. Rep. of Germany, May 25, 1977, 2723538
Int. Cl.³ G02C *1/00, 5/02*
U.S. Cl. 351—139 **9 Claims**

1. Glasses comprising means providing freedom for fashionable design and safety for the wearer including
a nose rest,
pads,
eye rims having a thin basic frame comprised of mechanically strong and load absorbing plastic material
a thin layer of soft and energy absorbing material provided on the basic frame, at least on the reverse side of the eyebrow part of the eye rims, the layer of soft material continuing into a reverse-sided lining of the nose rest,
the pads being in fixed position and composed entirely of said soft material and without stiffening means, and

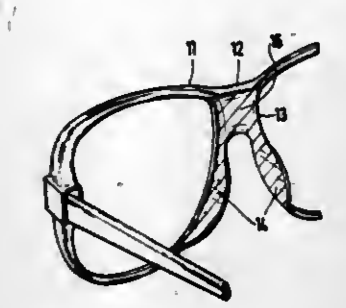

the soft material being of a flabby nature and comprising silicon rubber.

4,302,081
FUSED BIFOCAL CONTACT LENS
George F. Tsuetaki, 4343 N. Clarendon, Chicago, Ill. 60613
Continuation of Ser. No. 789,870, Apr. 22, 1977, abandoned. This application Apr. 17, 1979, Ser. No. 30,891
Int. Cl.³ G02C *7/04*
U.S. Cl. 351—161 **4 Claims**

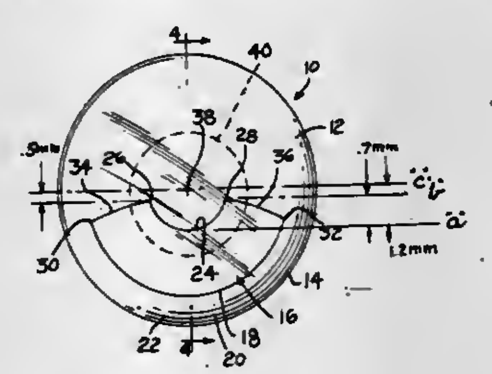

1. A bifocal contact lens unit having a principal, distant vision body portion made from a material having a first index of refraction, and a bifocal segment fused in place at least partially within said lens body and formed from a material having a second index of refraction higher than said first index, said lens unit having a given optical center, said bifocal segment lying entirely below said center and having upper and lower bifocal segment surfaces, said lower surface extending through a circular arc of not more than 170°, but greater than 90°, said arc having its center at said optical center and lying generally parallel to the outer edge of the lens body, and terminating at a pair of outer end portions, said upper segment surface being a three-portion segment surface having a first surface portion extending through said circular arc of not more than 170°, but greater than 90° being disposed generally centrally of said lens, having a radius of about 1.0 to about 1.2 millimeters, and terminating at a pair of inner end portions, said second and third surface portions extending outwardly, respectively, from said inner end portions and joining said respective outer end portions of said lower surface, said inner end portions being spaced downwardly from said lens center, said bifocal segment being constructed and arranged so that when said lens is oriented in its intended position for use, the line of sight of a user may move horizontally from left to right without passing through said bifocal segment, and whereby said line of sight falls entirely within said bifocal segment during horizontal eye movements when said lens is displaced upwardly.

4,302,082
DEVICE FOR THE INSERTION OF MICROFICHE CARDS INTO READING INSTRUMENTS
Horst Dabinski, Wiesbaden, Fed. Rep. of Germany, assignor to Rudolf Jopp, Frankfurt, Fed. Rep. of Germany
Filed Apr. 2, 1980, Ser. No. 136,720
Claims priority, application Fed. Rep. of Germany, Apr. 2, 1979, 2913193
Int. Cl.³ G03B *23/08*
U.S. Cl. 353—27 R **9 Claims**

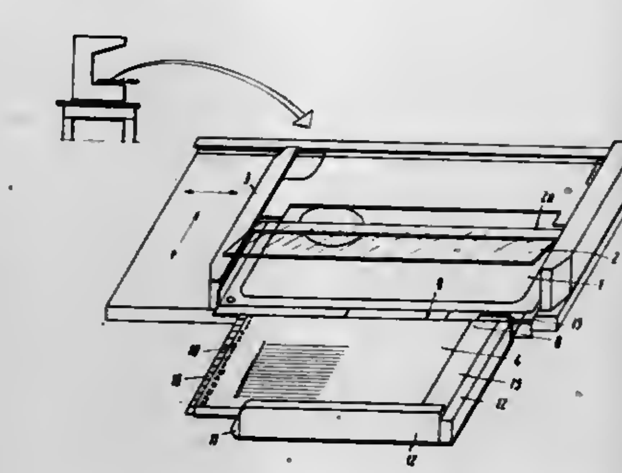

1. A device for the insertion of microfiche cards into a microfiche reader comprising:
(a) a plurality of microfiche cards each card having an image aperture part and a blank part with a perforation in one of the two corner areas of the blank part,
(b) a magazine containing said plurality of microfiche cards, said magazine
(b1) being equipped at a location corresponding to the perforation of the microfiche card with a shaft, releasible from the magazine, said shaft extending through said perforations in said microfiche cards as a holder and a rotational axis for movement of said microfiche cards, and
(b2) being open on a first lateral surface adjacent said shaft and on a second lateral surface perpendicular to said first lateral surface and facing away from said shaft,
(c) a film stage and magazine stage arrangement adapted for receiving said magazine wherein said magazine is positioned on the magazine stage such that
(c1) said first open lateral surface of said magazine is pointing toward the film stage, and
(c2) the distance between said shaft and the rear edge of the film stage being equal to the length of said microfiche card measured between said perforation of the card and the outer edge of said image aperture part.

4,302,083
AUTOMATIC EXPOSURE CONTROL CAMERA WITH MEANS TO LOCK CONTINUOUSLY RENEWED EXPOSURE CONTROL DATA IN A MEMORY
Masaharu Kawamura, Kawasaki, and Masanori Uchidoi, Yokohama, both of Japan, assignors to Canon Kabushiki Kaisha, Tokyo, Japan
Filed Mar. 4, 1980, Ser. No. 127,072
Claims priority, application Japan, Mar. 12, 1979, 54-28547
Int. Cl.³ G03B *7/093*
U.S. Cl. 354—23 D **5 Claims**

1. An automatic exposure control camera comprising:
(a) memory means having data content stored therein on the basis of object brightness information;
(b) exposure control means for controlling an exposure on the basis of the content in said memory means;
(c) renewing means capable of periodically renewing the memory content of the memory means for producing a renewing signal which renews the memory content of the memory means;
(d) signal forming means for producing one of a first signal and a second signal and for converting the first signal to the second signal in response to external operations and for continuing to produce the second signal even after the external operation ends; and
(e) gate means between said memory means and said renewing means and responsive to the first signal from said

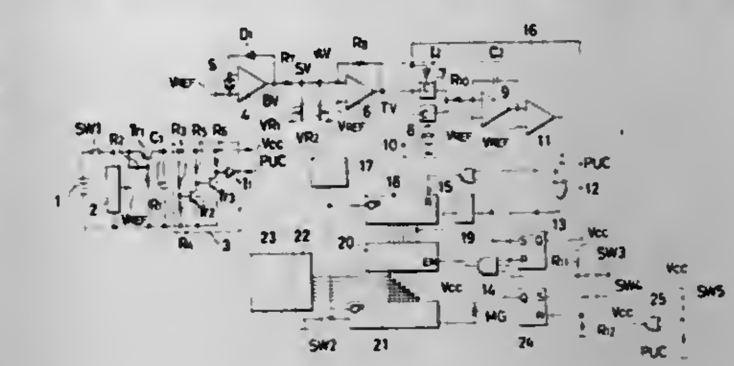

signal forming means for passing the renewing signal from said renewing means to said memory means therethrough, and responsive to the second signal from said signal forming means for inhibiting passage of the renewing signal from said renewing means so that the memory content of said memory means is locked.

4,302,084
AUTOMATIC RANGEFINDING DEVICE FOR USE IN A CAMERA
Rogers J. Greenwald, and Lawrence J. Matteson, both of Rochester, N.Y., assignors to Eastman Kodak Company, Rochester, N.Y.
Filed Mar. 10, 1980, Ser. No. 128,754
Int. Cl.³ G03B *3/10*
U.S. Cl. 354—25 **8 Claims**

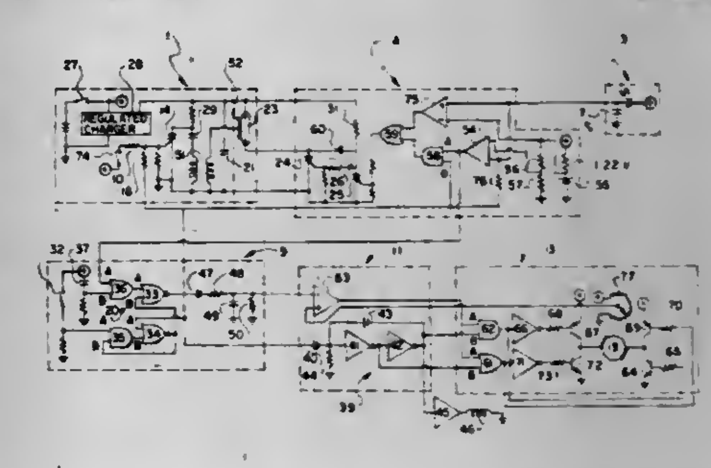

1. In a camera having an objective lens and an adjustable component for adjusting a focal characteristic of the objective lens, a device for measuring distance to a reflective subject, comprising:
a light source of predetermined intensity for illuminating the subject;
means for activating the light source;
light sensitive means for detecting light emitted by the light source and reflected from the subject and for generating an output signal related to the reflected light so detected;
integrating means coupled to the light sensitive means for producing a trigger signal when the total amount of reflected light received by the light sensitive means reaches a predetermined value;
timer means for measuring the time interval between activation of the light source and generation of the trigger signal;
converter means coupled to the timer means and responsive to the trigger signal for generating a range signal as a function of the measured time interval; and
means coupled to said converter means and responsive to said range signal for adjusting said camera component.

4,302,085
SHUTTER TIME ADJUSTMENT FOR A FLASH MODE AND/OR FILM-LEADER LOCATION
Kazuyuki Kazami, Tokyo; Yoshiaki Ohtsubo, Kawasaki, and Yasunori Kitamura, Tokyo, all of Japan, assignors to Nippon Kogaku K.K., Tokyo, Japan
Filed Feb. 15, 1980, Ser. No. 121,653
Claims priority, application Japan, Feb. 23, 1979, 54-21888[U]
Int. Cl.³ G03B *7/00, 9/62*
U.S. Cl. 354—32 **5 Claims**

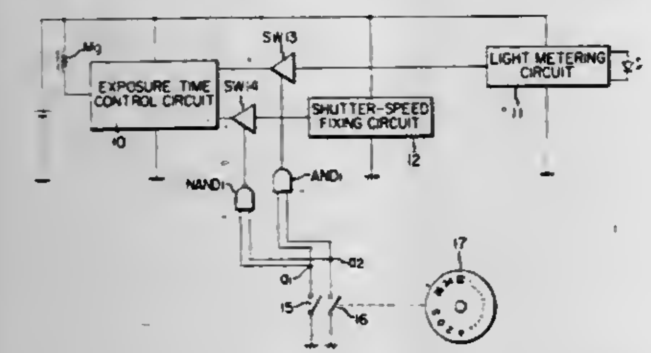

1. In a photographic camera comprising an exposure time control circuit for controlling the shutter speed in response to the brightness of the object, a film frame number indicating device capable of indicating an usable range for frames allowing photographing operation and a non-usable range for frames not allowing photographing operation, a second exposure time control circuit for controlling the shutter with a shutter speed suitable for flash photographing and means for controlling the shutter to a shutter speed independent from the shutter speed determined by said exposure time control circuit when said indicating device indicates said non-usable range, an improvement wherein said means for controlling the shutter comprise switch means for selecting the shutter speed control by the aforementioned exposure time control circuit or by said second exposure time control circuit in response to the indication of said indicating device in such a manner that the shutter is controlled by the shutter speed determined by said second exposure time control circuit when said indicating device indicates said non-usable range.

4,302,086
LIQUID CRYSTAL INDICATOR IN CAMERA FINDER
Ryoichi Suzuki, Kawasaki; Takashi Uchiyama, Yokohama; Hiroyasu Murakami, Tokyo; Masaharu Kawamura, Kawasaki; Shinji Sakai, Tokyo, and Kikuo Momiyama, Yokohama, all of Japan, assignors to Canon Kabushiki Kaisha, Tokyo, Japan
Filed Feb. 13, 1980, Ser. No. 121,307
Claims priority, application Japan, Feb. 20, 1979, 54-19300
Int. Cl.³ G03B *17/20*
U.S. Cl. 354—53 **10 Claims**

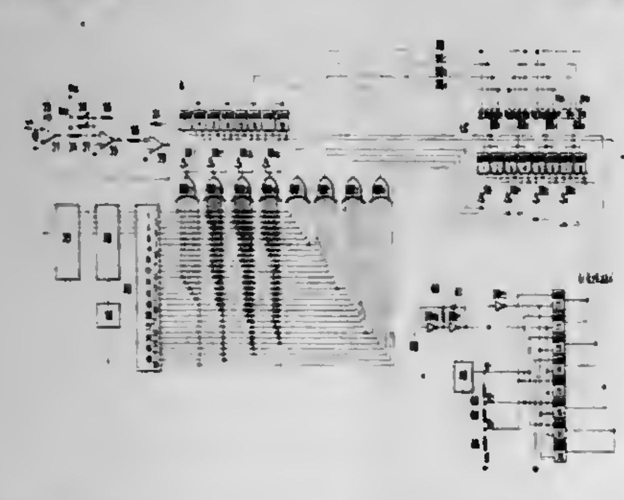

1. A liquid crystal indicating device for a camera, comprising:

(a) a liquid crystal cell which includes two base plates facing each other and sandwiching a liquid crystal substance therebetween and a plurality of transparent electrodes outside of each of said plates, the transparent electrodes on the plates forming a plurality of pairs of electrodes opposing each other, and said pairs of electrodes opposing each other being arranged in a matrix and related with other pair or pairs so that any one of the electrodes forming each pair of opposing electrodes is electrically connected with any one of the electrodes forming an adjacent pair of electrodes opposing each other, and

(b) a driver circuit for applying an alternating voltage of an amplitude above the voltage level for light shuttering of the liquid crystal cell to one of the transparent electrodes positioned at one side of the cell, and for applying a voltage of opposite phase to and of the same amplitude as that of the alternating voltage to one or two of the electrodes positioned at the other side of the cell, so that one or two of the plurality of pairs of electrodes of the cell opposing each other are placed in a light shuttering state, the electrode to which said alternating voltage of amplitude above the voltage level for light shuttering of the light crystal cell is to be impressed being selected so that the one or two pairs of electrodes placed in a light shuttering state are consecutively shifted by one bit each in a direction of the above mentioned matrix corresponding to a change in one direction of an input signal level.

4,302,087
MICROSCOPE ATTACHMENT CAMERA
Günter Reinheimer, Biebertal, and Herbert Leiter, Wetzlar, both of Fed. Rep. of Germany, assignors to Ernst Leitz Wetzlar GmbH, Wetzlar, Fed. Rep. of Germany
Filed Jun. 13, 1980, Ser. No. 159,161
Claims priority, application Fed. Rep. of Germany, Jun. 15, 1979, 2924053
Int. Cl.³ G02B *21/18;* **G03B** *17/48*
U.S. Cl. 354—79 **6 Claims**

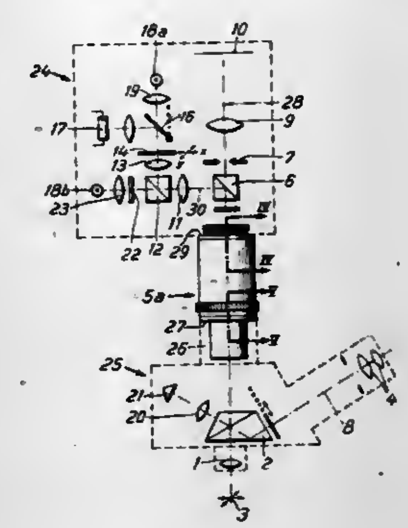

1. In a microscope and attachment camera therefor having an observation beam with a system for measuring the brightness of an object detail and with markings for indicating at least the detail metering field and the image field of the camera in said observation beam, wherein a metering field marking (14) is positioned on a first plate and an image field marking (22) is positioned on a second plate, said first plate defined by a metering field stop (14), said metering field marking and said image field marking differing in shape and size (14,22) and being simultaneously reflected into said observation beam through a photographic ocular (5), said photographic ocular having an imaging beam (28) passing therethrough, the improvement comprising:

a housing (24) for said attachment camera, at least one binocular tube (25) on said microscope;

holding means (5*a*) seating in exchangeable manner said photographic ocular (5) provided between said housing (24) and said binocular tube 25; and

said holding means connected to said housing for simultaneous rotation therewith whereby said object detail is aligned with said image field marking without rotation of said object.

4,302,088
CAMERA FOR RECORDING SOLAR ACCESS TO A SITE
Richard L. Vezie, 233 Patterson St., Ashland, Oreg. 97520
Filed Jul. 14, 1980, Ser. No. 168,042
Int. Cl.³ G03B *17/24, 17/00*
U.S. Cl. 354—107 **12 Claims**

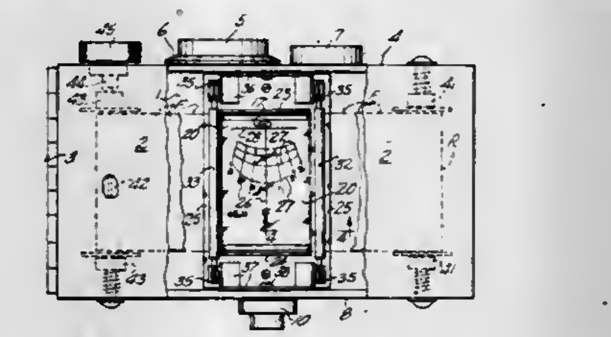

1. A camera for photographing a geographical site and superimposing indicia on the film exposure to evaluate solar access to the site, said camera comprising,

a body defining an internal area, a shutter assembly thereon including light admitting means for film exposure,

an indicia bearing member within the internal area and having both light translucent and opaque areas, said indicia bearing member in the path of shutter admitted light, said opaque areas constituting indica representing an apparent path of the sun above a horizon viewed through the camera, and

film guide means within said body adapted to guide the film past said indicia bearing member whereby shutter assembly actuation results in an image of the photographed object being imparted to the so positioned film when exposed along with the imparting of an image of the indicia to the film.

4,302,089
REFLECTING MIRROR DEVICE IN A SINGLE LENS REFLEX CAMERA
Toru Fukuhara, Isehara, Japan, assignor to Nippon Kogaku K.K., Tokyo, Japan
Filed Oct. 15, 1979, Ser. No. 84,747
Int. Cl.³ G03B *19/12*
U.S. Cl. 354—152 **7 Claims**

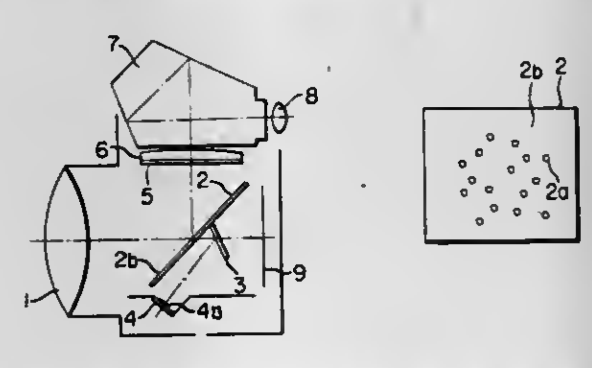

1. A reflecting mirror device in a single lens reflex camera for receiving light passed through the picture-taking lens of the camera during finder observation, said reflecting mirror device reflecting said light and directing it to a finder optical system such as a finder screen while, at the same time, passing therethrough part of said light and directing it to the light-receiving portion of a metering system, said reflecting mirror device having a number of pin-holes irregularly arranged on the reflecting surface thereof, each of said pin-holes having a cross sectional area of the order of $8\times10^{-5}-8\times10^{-3}$ mm² whereby it is minute enough so that it is not recognized as a shadow in a finder image and large enough so that the phenomenon of light diffraction created by each pin-hole is not recognized as a flare in the finder image.

4,302,090
ANTIBOUNCE DEVICE FOR ELECTROMAGNETICALLY DRIVEN SHUTTER
Masayoshi Kiuchi, Yokohama; Nobuaki Date, and Syuichiro Saito, both of Kawasaki, all of Japan, assignors to Canon Kabushiki Kaisha, Tokyo, Japan
Filed Mar. 26, 1980, Ser. No. 133,984
Claims priority, application Japan, Mar. 30, 1979, 54-39068
Int. Cl.³ G03B *9/62*
U.S. Cl. 354—234 **6 Claims**

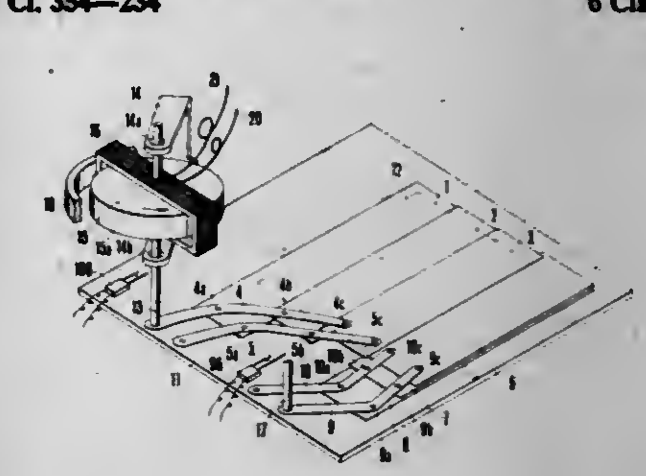

1. In an electromagnetically driven shutter for a camera having shutter blades and a driving means for electromagnetically driving said shutter blades, an improvement thereon comprising:

a current direction switch-over means which is arranged to change the direction of the driving current of said driving means immediately before completion of the operation of said shutter blades, and wherein said current direction switch-over means includes a switching means which is associated with said shutter blades and is arranged to become operative immediately before completion of the operation of said shutter blades.

4,302,091
BOUND PREVENTING DEVICE FOR FOCAL PLANE SHUTTERS
Toshikatsu Harase; Toshihisa Saito, both of Tokyo, and Nobuyoshi Inoue, Kawagoe, all of Japan, assignors to Copal Company Limited, Tokyo, Japan
Filed Dec. 4, 1979, Ser. No. 100,139
Claims priority, application Japan, Dec. 6, 1978, 53-151413
Int. Cl.³ G03B *9/40*
U.S. Cl. 354—246 **7 Claims**

1. A focal plane shutter comprising an exposure aperture, a front blade and rear blade which can respectively move between an exposure aperture covering position and an exposure aperture opening position, a front blade driving means which is operatively connected with said front blade to move said front blade, and a rear blade driving means which is operatively connected with said rear blade to move said rear blade, said front and rear blades being in said exposure aperture covering position when the shutter is cocked, said rear blade being first moved to said exposure aperture opening position and then said front blade being moved to said exposure aperture opening position to start an exposure when the shutter is released, and said rear blade being moved to said exposure aperture covering position to end the exposure when a proper exposure time lapses, characterized in that said shutter further comprises a reciprocally operable brake means which is provided in association with said rear blade driving means, whereby said rear

blade is braked by said brake means which is operated in one direction when said rear blade is moved from said exposure aperture covering position to said exposure aperture opening

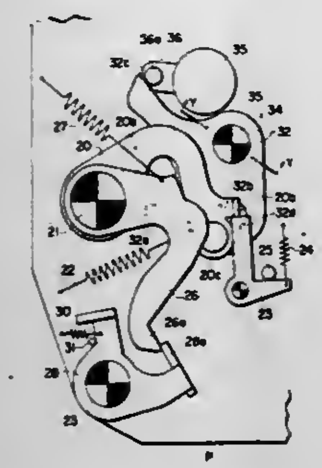

position and is braked by said brake means which is operated in the other direction when said rear blade is moved from said exposure aperture covering position to said exposure aperture opening position.

4,302,092
DRUM PROCESSING APPARATUS
George W. Ashton; Peter Manning, and Horace G. Lee, all of London, England, assignors to Paterson Products Limited, London, England
Continuation-in-part of Ser. No. 821,987, Aug. 5, 1977, abandoned. This application Oct. 2, 1979, Ser. No. 81,169
Claims priority, application United Kingdom, Aug. 11, 1976, 33409/76
Int. Cl.³ G03D *3/08*
U.S. Cl. 354—307 **6 Claims**

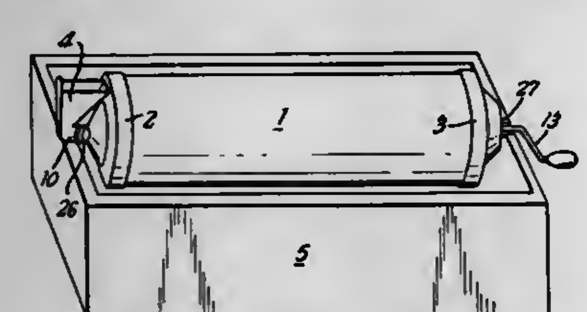

1. A drum processing apparatus comprising a support, a processing drum for containing processing liquid therein mounted on the support for rotation about its longitudinal axis and axially slidable relative the support, means biasing the drum axially, and manual driving means at one end of the drum for rotating the drum about its longitudinal axis and axially displacing the drum during rotation, said manual driving means generating variable axial displacement forces against the restoring force of the biasing means during manual rotation which impart axial displacement motion to the axially slidable drum against the restoring force of the biasing means, said driving means and biasing means acting together to cause processing liquid in the drum to oscillate axially.

4,302,093
COMBINED TRANSFER AND REGISTRATION SYSTEM FOR ELECTROPHOTOGRAPHIC COPIER
Benzion Landa, Edmonton, Canada, assignor to Savin Corporation, Valhalla, N.Y.
Filed Oct. 17, 1979, Ser. No. 85,689
Int. Cl.³ G03G *15/00*
U.S. Cl. 355—3 TR **37 Claims**

8. In a copying machine in which a toned image is to be transferred from a surface carrying said image to a length of copy material, a transfer roller having a surface hardness ap-

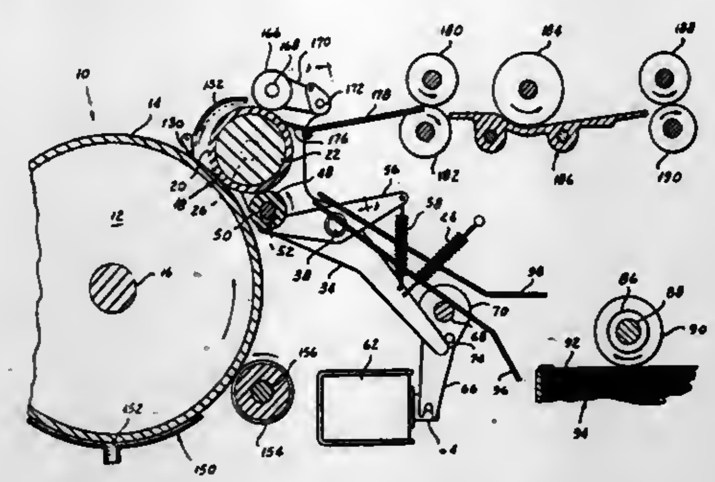

proximately equal to the surface hardness of said copy material.

4,302,094
DEVELOPMENT METHOD AND APPARATUS
Robert W. Gundlach, Victor, and Richard F. Bergen, Ontario, both of N.Y., assignors to Xerox Corporation, Stamford, Conn.
Filed Mar. 31, 1980, Ser. No. 135,739
Int. Cl.³ G03G *15/00*
U.S. Cl. 355—3 DD **17 Claims**

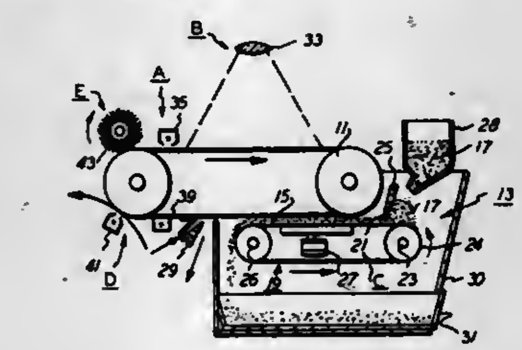

1. A method of developing a latent electrostatic nonuniform charge pattern on an imaging member with polar or polarizable toner particles which comprises defining a development zone for the deposition of the toner particles on the imaging member in image configuration, moving the imaging member containing said nonuniform charge pattern through said development zone, moving a blanket of toner particles through said development zone in the same direction as that of the imaging member and at a speed substantially equal to that of the imaging member, the thickness of said blanket of toner being such that toner particles forming the toner blanket are captured by the nonuniform charge pattern.

4,302,095
CLUTCH FOR ELECTROPHOTOCOPIER RECIPROCATING CARRIAGE
Richard A. Calabrese, Newtown, Conn., assignor to Pitney-Bowes, Inc., Stamford, Conn.
Filed Mar. 24, 1980, Ser. No. 132,758
Int. Cl.³ G03G *15/28, 15/32*
U.S. Cl. 355—8 **7 Claims**

1. Apparatus in an electrophotocopying machine having a reciprocating carriage moved by an endless drive member for reversing the direction of the carriage output drive member without reversing the direction of the endless drive member, comprising:

a shaft fixedly mounted to the housing for said electrophoto-

copying machine, said shaft having a flange entending radially outwardly from a central portion thereof;

an input drive member rotatably mounted at one end of said shaft and axially slidable along said shaft, said input drive member having means for drivingly engaging said endless drive member;

an output drive member rotatably mounted at the other end of said shaft, said output member having means for frictionally engaging said input drive member and means for driving said reciprocating carriage;

a plurality of rollers mounted in said flange of said shaft, said rollers being engageable with said input drive member and said output drive member;

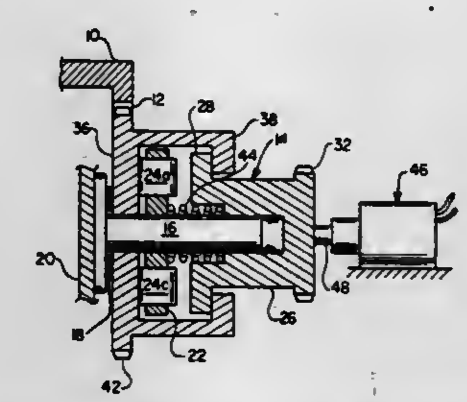

biasing means for maintaining frictional engagement between said input drive member and said output drive member; and

means for sliding said input drive member out of frictional engagement with said output drive member and into frictional engagement with said plurality of rollers, whereby when said input drive member is rotated by said endless drive member and frictionally engages said output drive member, said output drive member is caused to rotate in the same direction as said input drive member, and when said input drive member is rotated by said endless drive member and frictionally engages said rollers, said output drive member is caused to rotate in the opposite direction of said input drive member.

4,302,096
GRAPHIC FORMS OVERLAY APPARATUS
Arnold Schoenfeld, Norristown, and Joseph M. Curley, Lansdale, both of Pa., assignors to Sperry Corporation, New York, N.Y.
Filed Feb. 11, 1980, Ser. No. 120,592
Int. Cl.³ G03B *27/52*
U.S. Cl. 355—43 **8 Claims**

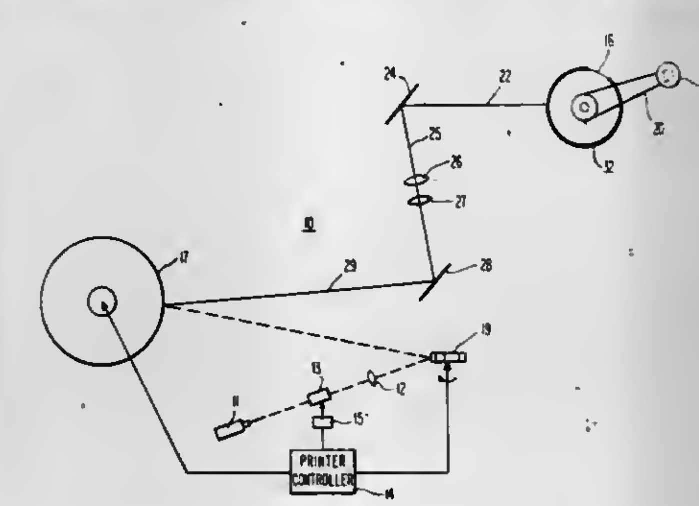

1. An apparatus to be used with a light sensitive, movable printing member of a printing system to enable said printing member to print a graphic forms pattern and information data in a single operation and which printing system includes printer circuitry means to generate first control signals, including top of page signals, said apparatus comprising:

movable forms drum for mounting a graphic forms negative thereon;

light source to illuminate said negative to produce a positive light image thereof;

optical means for reflecting at least a linear portion of said positive light image onto said light sensitive printing member;

motor means connected to said forms drum for rotating said forms drum;

logic circuitry means connected between said printer circuitry means and said motor means for activating said motor means to rotate said forms drum synchronously with said movable printing member, said logic circuitry means cooperating with each of said top of page signals to start rotation of said forms drum when printing of a page of data begins by said printing system; and

an alignment means connected to said logic circuitry means for generating and transmitting an alignment signal to said logic circuitry means, said alignment signal cooperating with said logic circuitry means to stop rotation of said forms drum in a predetermined position when said printing of said page is finished, whereby said graphic forms pattern is properly aligned with said data when said printing begins with the next top of page signal.

4,302,097
THREE-DIMENSIONAL REPRESENTATION OF SOLID OBJECTS
Gustav Chlestil, Franz Grasslergasse 88, 1238 Wien, Austria
Filed May 9, 1980, Ser. No. 148,228
Claims priority, application Austria, May 11, 1979, 3530/79
Int. Cl.³ G03B *27/68*
U.S. Cl. 355—52 **15 Claims**

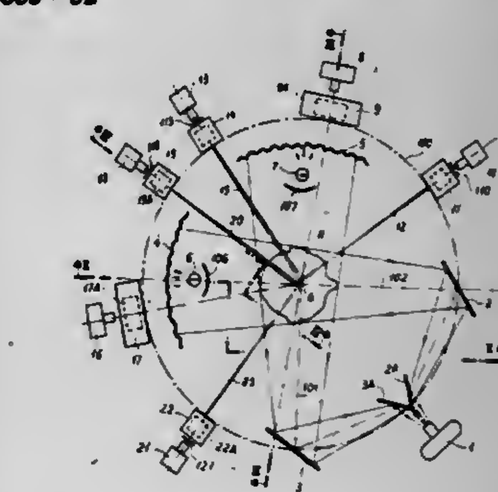

1. A method of storing information enabling a three-dimensional representation of a solid object, comprising the steps of:

(a) positioning the object in front of an illuminated background area substantially paralleling an axis passing through said object;

(b) taking a silhouetted image of said object against said background area in a direction generally perpendicular thereto;

(c) illuminating said object, in the position of steps (a) and (b), with at least one flat light beam trained upon the object along a plane including said axis whereby a contour line is projected upon the surface of the object;

(d) taking a collateral image of said object showing said contour line at an acute angle to said plane;

(e) repeating steps (a), (b) and (c) in a multiplicity of different angular positions, centered on said axis, of said object relative to said background area and said plane; and

(f) recording the information conveyed by said silhouetted image and said collateral image in each of said angular positions.

4,302,098
PRINTING APPARATUS

Yasuhito Kan, Urawa; Yoshimasa Kimura, Kawasaki; Masato Ishida, Yokohama; Koichi Miyamoto, Tokyo, and Yoshikuni Tohyama, Yokohama, all of Japan, assignors to Canon Kabushiki Kaisha, Tokyo, Japan
Continuation of Ser. No. 896,580, Apr. 14, 1978, abandoned. This application Nov. 13, 1979, Ser. No. 93,867
Claims priority, application Japan, Apr. 19, 1977, 52-45416; Apr. 19, 1977, 52-45417; Apr. 19, 1977, 52-45418; Mar. 1, 1978, 53-23217
Int. Cl.³ G03B *27/52*
U.S. Cl. 355—55 52 Claims

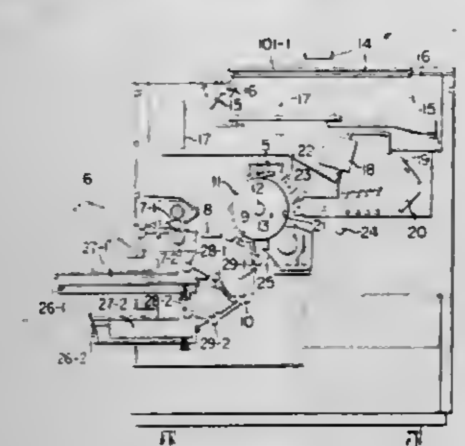

1. A recording apparatus comprising:
(a) an image recording member, on which an image is to be recorded;
(b) means for recording the image on the image recording member;
(c) means for controlling the operations of said recording means, wherein said control means includes magnification mode means for controlling said recording means to form an image on said image recording member of a size which has been selectively changed from the size of the original;
(d) output signal means for producing an output signal related to the size of said image recording member;
(e) manual selection means for actuation to provide a signal related to the size of the image;
(f) discriminating means coupled to said output signal means and said manual selection means for determining whether the size of the image recording member conforms to the size of said image; and
(g) indicating means coupled to said discriminating means for indicating conformance or nonconformance of the sizes of said image recording member and said image to be recorded thereon.

4,302,099
PROGRAMMABLE COMPUTING ENLARGING EXPOSURE METER

Stanley J. Gewirtz, 435 W. 119 St., New York, N.Y. 10027
Filed Jun. 26, 1979, Ser. No. 52,118
Int. Cl.³ G03B *27/80*
U.S. Cl. 355—68 6 Claims

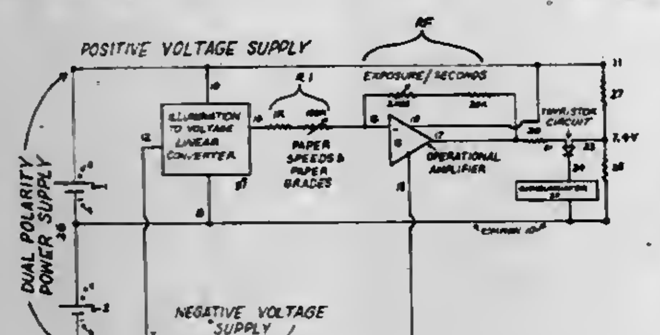

1. An exposure meter having an illumination to voltage linear converter and usable with an enlarger, comprising in combination: an operational amplifier having an inverting input serially connected to the output of the illumination to voltage linear converter through an R_1 variable resistor, the resistance of R_1 being inversely linearly related to photographic paper speed, and calibrated against paper speed and paper grade scales, an R_f variable resistor connected between the operational amplifier inverting input and the output of the operational amplifier, the resistance of R_f being linearly related to exposure time, and linearly calibrated to an exposure time scale, providing means for exposure indication.

4,302,100
PHOTOGRAPHIC DIRECT-PRINT SYSTEM

Eric B. Williams, Akron, Ohio, assignor to Portage Newspaper Supply Company, Akron, Ohio
Filed Mar. 5, 1980, Ser. No. 127,417
Int. Cl.³ G03B *27/80*
U.S. Cl. 355—68 13 Claims

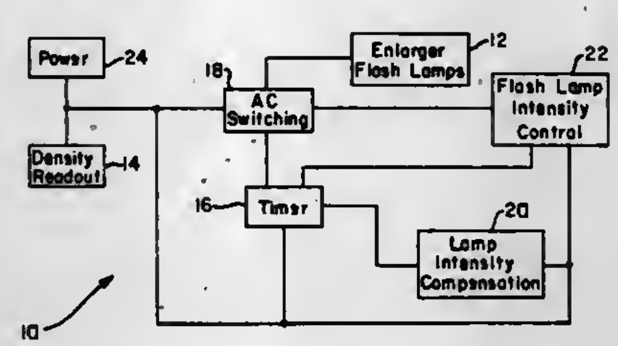

1. A direct-print system for producing screened prints comprising:
an enlarger having a main lamp for receiving a photo negative and for exposing an image thereof upon an easel;
a flashlamp in juxtaposition to said easel for casting light thereupon;
density sensing means for measuring the density of selected areas of said image;
a variable timer, comprising a counter controlled by a first operator-actuatable switch, connected to said flashlamp and said enlarger for regulating the period of time for which said flashlamp and main lamp are illuminated upon said ease; and
a latch interconnected between said first operator-actuatable switch and said counter, said latch enabling said counter upon actuation of said switch and inhibiting said counter after a predetermined period of time, said latch effecting the simultaneous illumination of said main lamp and flashlamp for said period of time.

4,302,101
PAPER FEED SYSTEM FOR PHOTOGRAPHIC PRINTER

Victor R. Baert, Anoka, and Gerald R. Bowe, Blaine, both of Minn., assignors to Pako Corporation, Minneapolis, Minn.
Continuation of Ser. No. 776,876, Mar. 11, 1977, abandoned. This application Feb. 5, 1979, Ser. No. 9,127
Int. Cl.³ G03B *27/58*
U.S. Cl. 355—74 5 Claims

1. In a photographic printer, a photosensitive paper web feed system comprising:
a paper deck;
feed idler roller means from which a photosensitive paper web is fed to the paper deck;
take-up driven roller means for taking up the paper web from the paper deck;
paper mask means for masking a portion of the paper web at the paper deck;
feed metering idler roller means positioned between the feed idler roller means and the paper mask means over which the paper web is fed from the feed idler roller means to the paper deck, advancement of the paper web from the feed idler roller means across the paper deck to the take-up driven roller means, causing rotation of the feed metering idler roller means;
paper feed sensing means for sensing the rotation of the feed metering idler roller means while permitting free rotation thereof and producing an electrical pulse for each increment of rotation of the feed metering idler roller means during a paper feed cycle;
motor means for driving, during the paper feed cycle, only the take-up driven roller means to supply the only driving force by which the paper web is fed from the feed idler roller means, across the paper deck, and to the take-up driven roller means;
paper feed length determining means for producing a digital electrical signal, prior to initiation of the paper feed cycle, indicative of the number of electrical pulses from the paper feed sensing means required to produce a desired paper feed length of the paper web during the paper feed cycle;

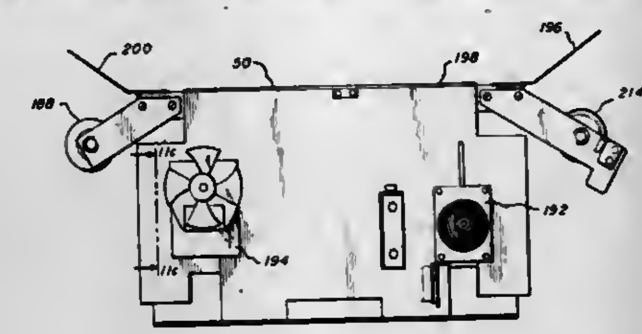

means for providing a cycle initiate electrical signal for initiating a paper feed cycle; and
control means for initiating operation of the motor means in response to the cycle initiate electrical signal to start the paper feed cycle and for controlling operation of the motor means during the paper feed cycle as a function of the digital electrical signal from the paper feed length determining means and the electrical pulses from the paper feed sensing means, the control means including electronic counter means for counting from an initial count to a final count in response to the electrical pulses from the paper feed sensing means, the electronic counter means providing control signals to the motor means which cause the motor means, and thus the paper feed cycle, to halt when the final count is attained, the number of electrical pulses from the paper feed sensing means required for the electrical counter means to count from the initial count to the final count being determined by the digital electrical signal from the paper feed length determining means.

4,302,102
APPARATUS AND METHOD FOR USING ROLLS OF LIGHT SENSITIVE PAPER IN A REPRODUCTION MACHINE

Gary M. Stark, 7 E. 19th St., New York, N.Y. 10003, and Alan D. Wagner, 48 Marlene Dr., Syosset, N.Y. 11791
Filed Nov. 23, 1979, Ser. No. 96,997
Int. Cl.³ G03B *27/58*
U.S. Cl. 355—72 25 Claims

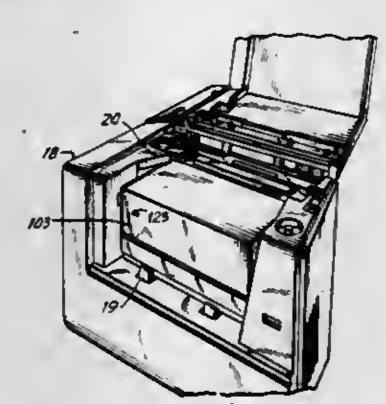

1. Apparatus comprising a reproduction machine including internal structure, a casing releasably located within said machine, a spool for light-sensitive paper within said casing, a movable cover on said casing and having open and closed positions relative thereto, said cover and casing forming an opening for the light sensitive paper on said spool to leave said casing and enter into the internal structure of said reproduction machine, said cover, when in a closed position with the light sensitive paper leaving said casing, having a light-tight relationship with said casing, means on said casing to cooperate with the cover to maintain said light-tight relationship, and locking means for locking said cover in said closed position, said locking means comprising a latch means and a recess means, said latch means and recess means being associated with said cover and said casing, said latch means being movable between a first position in which it is released from said recess means and a second position in which it is engaged with said recess means, said latch means being constructed to prevent admission of light into said casing when the cover is closed and said latch means is in its first and second positions.

17. A method for installing a roll of light sensitive reproduction paper into a reproduction machine having an internal structure comprising placing an openable substantially light tight casing into said machine, opening said casing, positioning the roll of reproduction paper into said casing, inserting one end of the light sensitive paper into the internal structure of the reproduction machine, closing said casing and releasably locking said casing by moving a closure latch to a closed position, the latch blocking light entry into the casing in locked and unlocked conditions of the casing.

4,302,103
PRECISION CONTACT PRINTER

Barthel Zeunen, 215 E. 12 Mile Rd., Madison Heights, Mich. 48071
Filed Jul. 14, 1980, Ser. No. 168,086
Int. Cl.³ G03B *27/10, 27/20*
U.S. Cl. 355—84 9 Claims

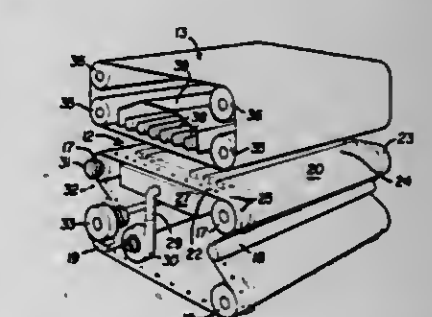

1. A precision contact printer for exposing a light sensitive sheet to an elongated, wide drawing and the like, comprising:
an endless, support belt, made of an air impervious, flexible material, having a reach forming a flat support surface upon which the sheet and the drawing are positioned in overlapping contact;
a clamping belt overlapping said support surface for holding the drawing and sheet together upon said support surface;
said clamping belt being transparent, and light sources arranged for shining light through the clamping belt for exposing the sheet portion located upon the support surface;
said support belt having narrow edge border portions extending the length thereof and closely spaced channels extending transversely of the belt between the opposite border portions;
a row of spaced apart holes formed in at least one of the border portions, with the row extending along the length of the belt, and the holes being close to the adjacent ends of the channels;
a vacuum chamber aligned with the row of holes at said border portion at the surface of the support belt reach which is opposite said support surface, for removing air

through the holes and from the belt channels when the channels are overlapped by the clamping belt;
and drive means for moving the support belt longitudinally;
whereby an elongated strip of light sensitive sheet material, overlapped by an elongated drawing and the like are fed between the support belt and clamping belt and are longitudinally moved therebetween by the longitudinal movement of the belts, while air is removed from the channels formed in the support surface of the support belt to thereby tightly clamp, in surface to surface contact, the clamping belt, drawing and film upon the support surface so that light shining through the clamping belt exposes the sheet for thereby reproducing a precision duplicate of the drawing.

4,302,104
VEHICLE WHEEL ALIGNMENT APPARATUS
Lee Hunter, 13501 Ladue Rd., Creve Coeur, Mo. 63141
Filed Oct. 2, 1979, Ser. No. 81,102
Int. Cl.³ G01B *11/26, 5/24*
U.S. Cl. 356—152 4 Claims

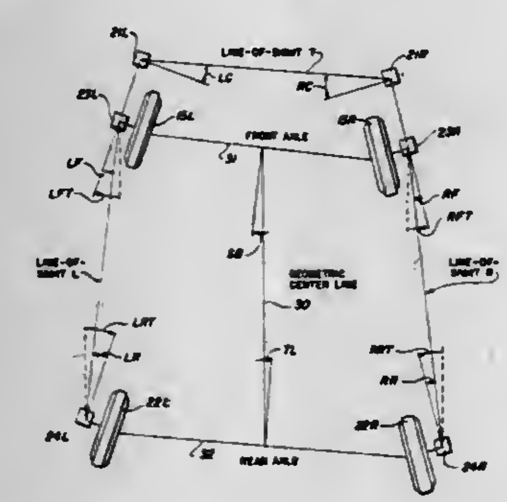

1. In apparatus for determining the alignment positions of vehicle wheels in relation to a reference axis of the vehicle and to the thrust line of the non-steerable wheels, the improvement which comprises:
(a) first alignment determining instruments carried by each of a set of steerable wheels so as to be in a substantially vertical plane containing the axis of rotation of said steerable wheels;
(b) second alignment determining instruments carried by each of a set of non-steerable wheels so as to be in a substantially vertical plane containing the axis of rotation of said non-steerable wheels;
(c) third alignment determining instruments supported from said steerable wheels in position to be in line-of-sight with each other transversely of the vehicle;
(d) radiant energy beam projectors and beam sensors in each of said first, second and third alignment determining instruments in positions such that the radiant energy beams from first instruments are in the line-of-sight to be sensed by said beam sensors in second instruments, radiant energy beams from second instruments are in the line-of-sight to be sensed by said beam sensors in first instruments, said first and second instruments are arranged in cooperating pairs along opposite longitudinal sides of the vehicle so as to be spaced in the longitudinal direction between said steerable and non-steerable wheels; and
(e) radiant energy beam projectors and beam sensors in said third alignment determining instruments in positions of cooperation transversely of the vehicle adjacent the steerable wheels, whereby said first and third instruments cooperate to generate signals determinative of the alignment positions of the steerable wheels relative to the vehicle reference axis and said second instruments cooperate with said first instruments to generate signals determinative of the thrust line effect of the non-steerable wheel on said steerable wheels.

4,302,105
DETECTION APPARATUS FOR FINDING HOLES IN WEBS
Erwin Sick, Icking, Fed. Rep. of Germany, assignor to Erwin Sick GmbH, Optik-Elektronik, Waldkirch, Fed. Rep. of Germany
Filed Feb. 14, 1979, Ser. No. 12,045
Claims priority, application Fed. Rep. of Germany, Feb. 27, 1978, 2808359
Int. Cl.³ G01N *21/89*
U.S. Cl. 356—237 4 Claims

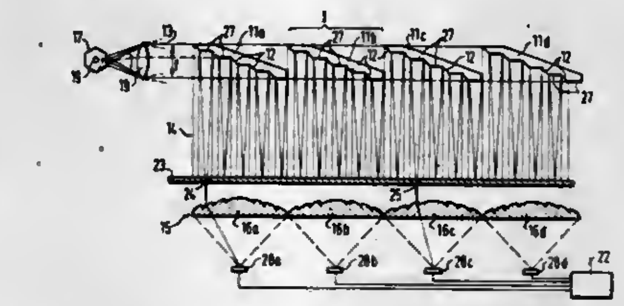

1. Detection apparatus for finding holes in webs and having a transmission device including a laser arranged to direct a light curtain at a web, a detection device including photoelectric detection means, disposed to receive light transmitted through holes in the web, and an electronic processing device for processing signals from said photo-electric detection means; said transmission device comprising a row of individual stepped mirror strips, each said strip being displaced sideways relative to the preceding strip of the row and being inclined to the direction of the row, and a scanning device for directing a beam from said laser in the direction of the row to scan the individual mirrors which are inclined relative to said beam one after the other thereby deflecting the light through substantially 90° to form said light curtain, said transmitting device further comprising optical means for introducing a degree of divergence into the beams deflected from said stepped mirror strips and forming said light curtain whereby said light curtain scans across said web without gaps, and said detection device comprising a row of individual Fresnel lenses, each said Fresnel lens having an operative section of substantially rectangular form for receiving light, and said Fresnel lenses being arranged edgewise one after the other in a substantially abutting relationship and extending parallel to the row of strips, together with a number of photoelectric converters defining said photoelectric detection means and being positioned to receive light from said Fresnel lenses.

4,302,106
BALLOON TESTING DEVICE
Glenn N. Taylor, Cary, Ill., assignor to The Kendall Company, Boston, Mass.
Division of Ser. No. 920,105, Jun. 28, 1978, Pat. No. 4,212,192. This application Jan. 4, 1980, Ser. No. 109,435
Int. Cl.³ G01N *21/88*
U.S. Cl. 356—240 1 Claim

1. A device for testing an elongated elastic sleeve having a pair of opposed ends, comprising:
first retaining means comprising an elongated support member to receive one end of the sleeve, and a first clamp member having a pair of opposed movable jaws on opposed sides of the support member;
first means for selectively moving the jaws of the first clamp member between a first open position with the jaws spaced from the support member, and a second closed position with the jaws gripping the sleeve against the support member;
second retaining means comprising an elongated illumination member to receive the other end of the sleeve, and a second clamp member having a pair of opposed movable jaws on opposed sides of the illumination member;
second means for selectively moving the jaws of the second clamp member between a first open position with the jaws spaced from the illumination member, and a second closed position with the jaws gripping the sleeve against the illumination member; and
means for supplying light to the illumination member to illuminate a central portion of the sleeve from within the sleeve.

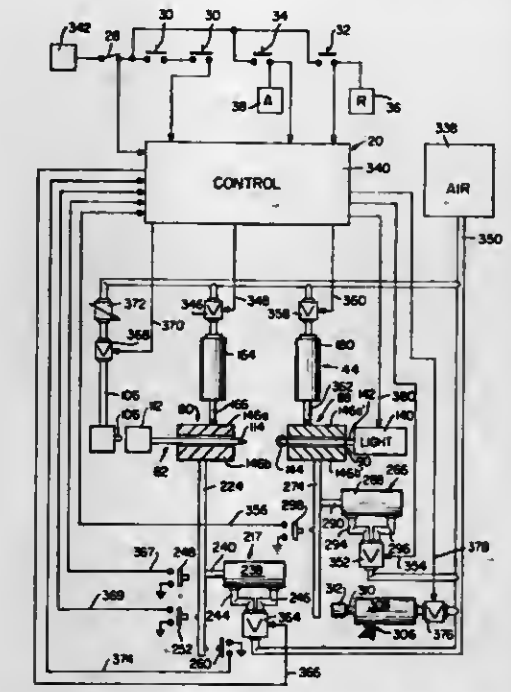

4,302,107
INTERFEROMETER WITH A COIL COMPOSED OF A SINGLE MODE WAVEGUIDE
Gerhard Schiffner, Munich, and Dieter Rosenberger, Sauerlach, both of Fed. Rep. of Germany, assignors to Siemens Aktiengesellschaft, Berlin & Munich, Fed. Rep. of Germany
Filed Mar. 19, 1979, Ser. No. 21,692
Claims priority, application Fed. Rep. of Germany, Apr. 4, 1978, 2814476
Int. Cl.³ G01B *9/02*
U.S. Cl. 356—350 9 Claims

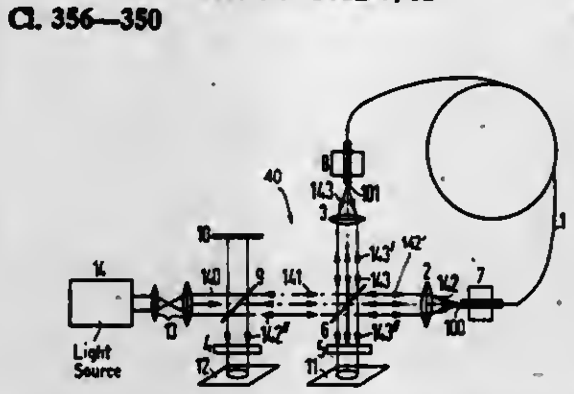

1. In an interferometer with an optical single mode waveguide wound into a coil, said waveguide having an end surface at each end for accepting light into the waveguide and for emitting light which is traveling in the waveguide, means for superimposing a portion of the light emitted from each end surface of the waveguide to form two separated superimposed beams of light, and means for receiving each of said superimposed beams of light, the improvement comprising a polarization filter being arranged between each of the means for receiving each of the superimposed beams of light and the means for forming the superimposed beams, said polarization filters being the same type and having the same orientation so that each of the superimposed beams passes through a polarization filter prior to reaching the means for receiving the beam.

4,302,108
DETECTION OF SUBSURFACE DEFECTS BY REFLECTION INTERFERENCE
William J. Timson, Belmont, Mass., assignor to Polaroid Corporation, Cambridge, Mass.
Filed Jan. 29, 1979, Ser. No. 7,011
Int. Cl.³ G01B *11/00;* G01N *21/84;* G01J *1/00*
U.S. Cl. 356—359 14 Claims

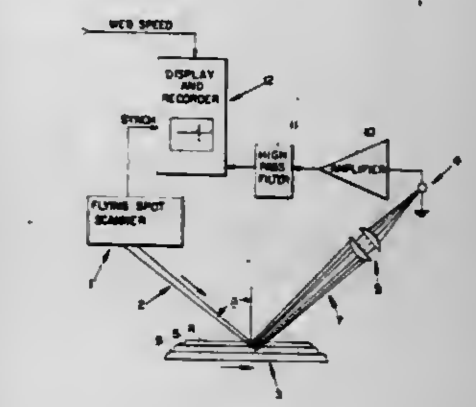

1. The method of inspecting a layered material having at least one optically transmissive surface layer and at least one other layer adjacent said optically transmissive layer comprising the steps of moving said material past an inspection station, directing a beam of light onto said optically transmissive surface layer at an acute angle of incidence, focusing light reflected and scattered from said material onto intensity detecting means to produce a reflection interference signal determined by the relative phases and amplitudes of the reflected and scattered components of said beam, and detecting changes in said signal produced in the presence of anomalies in one or more of said layers.

4,302,109
POSITION ENCODERS
George G. Davies, Chelmsford, England, assignor to The Marconi Company Limited, Chelmsford, England
Filed Jun. 19, 1979, Ser. No. 49,903
Int. Cl.³ G01B *11/14, 11/00*
U.S. Cl. 356—375 16 Claims

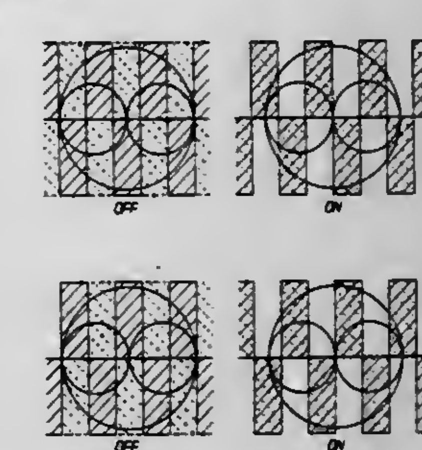

1. A position encoder comprising, in combination:
light receiving means for receiving light from a field of view;
an optical mask movable along a path passing through said field of view and said mask having a series of mask portions defining spaces along said path;
illuminating means for illuminating a field of said mask;
reflector means for reflecting light passing through the field illuminated by said illuminating means back through said mask to illuminate said field of view and for imaging mask portions lying in said field illuminated by said illuminating means in said field of view, said reflector means being concave whereby the imaged mask portions parade through said field of view in direction opposite to that

which the mask portions are paraded through said field of view due to movement of the mask; and

each of said mask portions being disposed at least predominantly to one side or the other of a line extending along said path and passing through the center of said field of view and through the center of the field illuminated by said illuminating means so as to be asymmetrical with respect to such line whereby the image of each such mask portion produced by said reflecting means is of opposite asymmetry with respect to said line.

4,302,110
MIXING APPARATUS

Ossi Niemi, Tampere, Finland, assignor to Flowcon Oy, Kirkkonummi, Finland
Filed Oct. 25, 1979, Ser. No. 88,190
Claims priority, application Finland, Oct. 27, 1978, 783276
Int. Cl.³ B28C *5/12;* **B01F** *7/00, 15/02*
U.S. Cl. 366—41 **4 Claims**

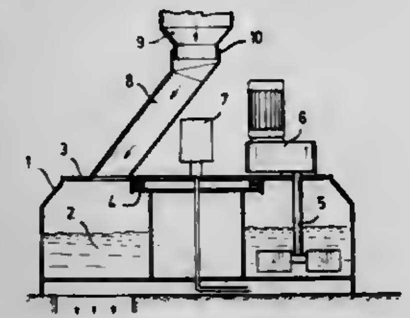

1. A mixing apparatus comprising:
(a) a stationary mixing container;
(b) an upper circular cover plate for said container, said cover plate having an upper side and an under side and being arranged to rotate continuously around a central vertical axis in relation to said stationary mixing container;
(c) means for rotating said cover plate;
(d) a discharge channel for at least one material, arranged above said cover plate in substantially coaxial relation thereto;
(e) at least one filling channel having a lower end fastened onto said cover plate and an upper end;
(f) means at said upper end of said at least one filling channel for receiving said material from said discharge channel;
(g) at least one mixing tool rotatably arranged on said under side of said cover plate at a distance from said central vertical axis so as to move along a circular path within said mixing container during the rotation of said cover plate; and
(h) means for rotating said mixing tool, said rotating means being arranged on said upper side of said cover plate.

4,302,111
METHOD AND APPARATUS FOR THE CONTINUOUS PRODUCTION OF THERMALLY PROCESSED FOOD SLURRIES

Hubert Harris, Auburn, Ala., assignor to Peanut Research and Testing Laboratories, Inc., Edenton, N.C.
Continuation-in-part of Ser. No. 57,741, Jul. 16, 1979, abandoned, which is a continuation of Ser. No. 899,368, Apr. 24, 1978, abandoned. This application Oct. 1, 1979, Ser. No. 80,581
Int. Cl.³ B01F *13/02*
U.S. Cl. 366—107 **13 Claims**

1. Apparatus for producing a slurry from peanuts or the like, comprising
(a) a primary mixing chamber in which said slurry is simultaneously formed and heated,
(b) a combination pump and secondary mixing chamber connected to said primary mixing chamber for pumping and mixing said slurry from said primary mixing chamber,
(c) extrusion means connected to a source of ground peanuts and to said primary mixing chamber for delivering a continuous and generally flat strand of ground peanuts directly into said primary mixing chamber,
(d) a foraminous support mounted in said primary mixing chamber adjacent to the path of travel of said strand and generally parallel thereto,
(e) spray means connected to a source of liquid and to said primary mixing chamber in spaced opposing relation to said support on the strand side thereof for delivering said liquid under pressure directly against said strand to fragment said strand and force the fragments through said support,

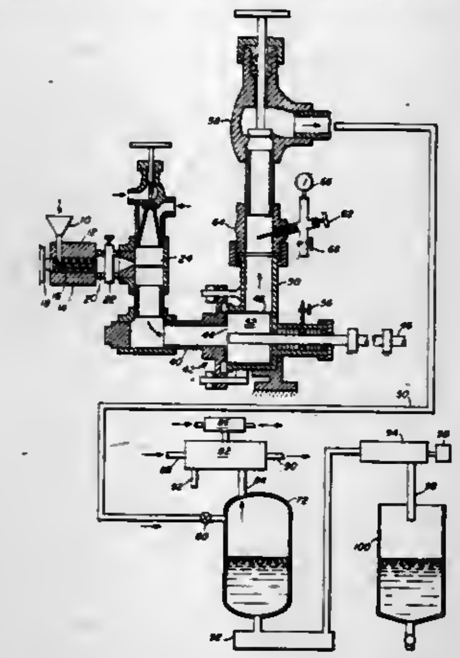

(f) steam delivery means connected to a source of steam and directly to said spray means at said primary mixing chamber for directly and quickly heating said liquid and form a heated slurry thereby,
(g) said spray means including a perforated tubular infusion cone the base of which is facing and proximate to said support and the apex is distal thereto and connected to said source of liquid, said steam delivering means including walls defining an annular passage about said cone whereby steam fed into said passage will flow through said perforated cone to mix with said liquid, the axis of said cone being generally perpendicular to to said support and to said strand.

4,302,112
PROCESS FOR CONTINUOUS HOMOGENIZATION OR EMULSIFICATION OF LIQUID AND AN ULTRASONIC APPARATUS FOR CARRYING OUT THE PROCESS

Per R. Steenstrup, Hellerup, Denmark, assignor to Reson System ApS, Hillerod, Denmark
PCT No. PCT/DK79/00001, § 371 Date Sep. 14, 1979, § 102(e) Date Sep. 14, 1979, PCT Pub. No. WO79/00525, PCT Pub. Date Aug. 9, 1979
PCT Filed Jan. 17, 1979, Ser. No. 149,199
Int. Cl.³ B01F *11/02, 13/00*
U.S. Cl. 366—114 **6 Claims**

1. An apparatus for continuous homogenization or emulsification of a liquid comprising:
a closed ultrasonic chamber having a wall and at least one inlet for said liquid and at least one outlet;
an ultrasonic generator having at least one ultrasonic generator surface opening into said wall of the ultrasonic chamber, said ultrasonic generator surface being disposed downstream from said at least one inlet and upstream from said at least one outlet;
means positioned in the ultrasonic chamber in communication with said inlet for stirring said liquid and directing a thin flowing layer of said liquid across said ultrasonic generator surface during continuous admixing of the thus treated liquid in the remaining portions of the ultrasonic chamber.

6. A process for continuous homogenization or emulsification of an untreated liquid comprising several ingredients in a chamber having an ultrasonic generator, which comprises the steps of:
supplying said liquid to be treated to said chamber;
exposing said liquid to ultrasonic vibrations from said ultrasonic generator within said chamber;

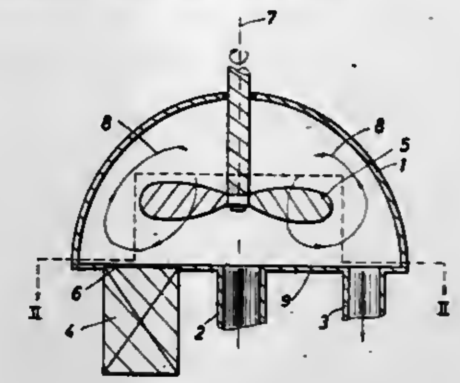

stirring and directing said liquid so as to form a thin flowing layer across a surface portion of said ultrasonic generator and be treated;
continuously admixing the treated liquid in the remaining portions of said chamber; and
discharging said treated liquid from said chamber.

4,302,113
METHOD AND APPARATUS FOR ADMIXING PHOTOGRAPHIC PROCESSING COMPOSITIONS

Ross E. Rumfola, Avon, N.Y., assignor to Eastman Kodak Company, Rochester, N.Y.
Filed Apr. 11, 1980, Ser. No. 139,519
Int. Cl.³ B01F *15/02*
U.S. Cl. 366—150 **10 Claims**

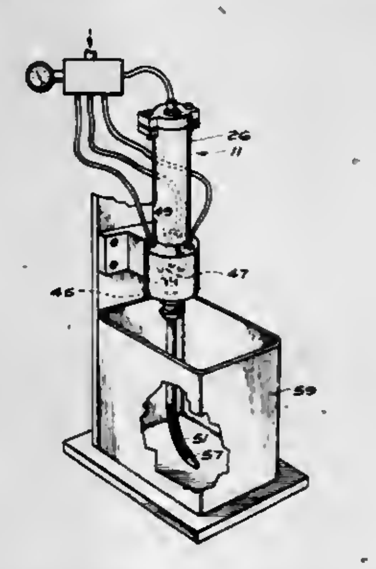

1. A method of preparing a solution from a shear-thinable concentrate paste of a photographic processing composition; said method comprising the steps of:
shear thinning the processing composition to thin the composition; and
contacting said thinned composition with a liquid under turbulent mixing conditions to disperse and dissolve said composition in said liquid and thereby form said solution.

4,302,114
ELECTROMAGNETIC WIRE PRINTER

Klaus H. Mielke, Radavägen 82, S-435 00 Mölnlycke, Sweden
Filed Jun. 19, 1979, Ser. No. 50,059
Claims priority, application Sweden, Jun. 19, 1978, 7806984
Int. Cl.³ B41J *3/12*
U.S. Cl. 400—124 **5 Claims**

1. A wire printer comprising
an operating magnet assembly comprising a plurality of flat, uniformly spaced core elements, each of which consists of a yoke member and at least two parallel, strip-shaped shank members integral with said yoke member,
an energizing winding on each of said shank members, said winding surrounding a portion of the shank extending between said yoke member and a projecting pole end of said shank,
an armature member for each of said shank member, said armature member extending along the shank member and having a rear end magnetically connected to said yoke member and a front portion opposed to the projecting pole end of the shank member,
means for supporting each of said armature members for

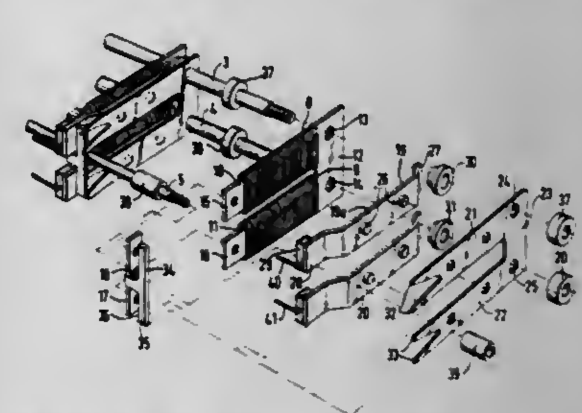

pivotal motion with respect to the shank member, a biasing spring for each of said armature members tending to move the front portion of the armature member away from the pole end of the shank member, a plurality of printing wires each corresponding to one armature member, said printing wires being substantially straight and parallel and extending at right angles to the planes of said flat core elements,
means for guiding the printing ends of said printing wires for longitudinal movement towards and away from a printing station, and
means for connecting each of said printing wires to the front end of a corresponding one of the armature members.

4,302,115
SYSTEM FOR DRIVING PRINT WIRES FOR PRINTERS

Makoto Yasunaga, and Toshio Kurihara, both of Tokorozawa, Japan, assignors to Citizen Watch Co., Ltd., Tokyo, Japan
Filed Dec. 11, 1979, Ser. No. 102,433
Claims priority, application Japan, Dec. 12, 1978, 53-154320
Int. Cl.³ B41J *3/12*
U.S. Cl. 400—124 **11 Claims**

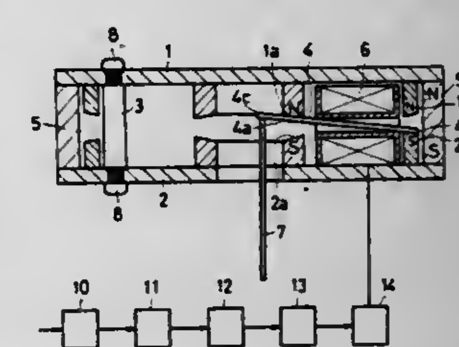

1. A print wire driver comprising:
a first yoke having first and second yoke ends spaced apart at a first predetermined distance;
a second yoke having third and fourth yoke ends spaced apart at said first predetermined distance, said second yoke being disposed adjacent said first yoke at a second predetermined distance therefrom, said first yoke end opposing said third yoke end and said second yoke end opposing said fourth yoke end;
a permanent magnet for magnetizing said first yoke with a first magnetic polarity and said second yoke with a second

magnetic polarity opposite said first magnetic polarity; and
an armature constrained between the yoke ends of said first and second yokes for free movement therebetween without a pivot, said armature having first and second ends;
said armature being movable between an off position contacting said first and fourth yoke ends to form a first magnetic circuit and a print position contacting said second and third yoke ends to form a second magnetic circuit;
said first magnetic circuit forming a path connecting said first yoke end, said armature, said fourth yoke end and said magnet;
said second magnetic circuit forming a path connecting said second yoke end, said armature, said third yoke end and said magnet;
a solenoid disposed between said first and second yokes and surrounding said armature; and
a print wire operatively coupled to one of said armature ends;
whereby said armature may be reciprocated between said off position and said print position by alternate excitation of said solenoid.

4,302,116
PRINTING MACHINE WITH THROAT FOR FRONT LOADING OF SHEETS
Dean S. May, Georgetown, Tex., and James M. Rigotti, Rochester, Minn., assignors to International Business Machines Corporation, Armonk, N.Y.
Continuation-in-part of Ser. No. 937,624, Aug. 28, 1978, abandoned. This application Jan. 2, 1980, Ser. No. 108,980
Int. Cl.³ B41J *15/04*
U.S. Cl. 400—124 **5 Claims**

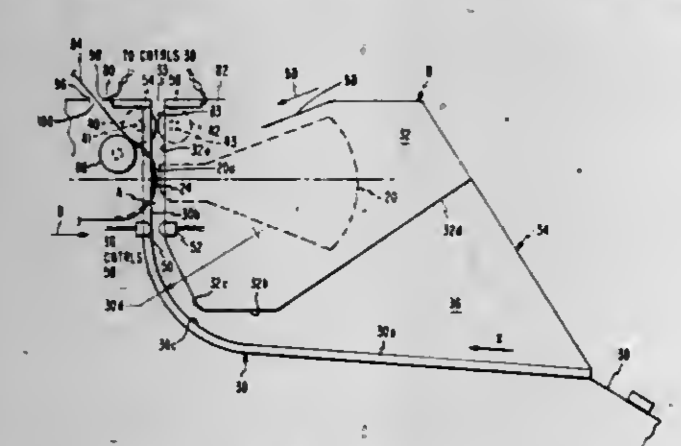

1. In an operator-controlled apparatus having a keyboard, a printing machine at least partially under control of said keyboard for printing transverse lines of print on an elongate discrete document inserted by said operator and including:
an outer document guide having an initial substantially horizontal flat guide portion adjacent said keyboard and a curved guide portion connected therewith and a final vertical guide portion connected with said curved guide portion,
an inner document guide having a surface extending upwardly at an acute angle with respect to said initial guide portion for providing a document-receiving throat, and a vertical surface providing a vertical passage with said final vertical guide portion whereby the discrete document may be deposited on the initial guide portion and may be pushed by said operator into said throat and over the curved guide portion to said vertical passage through which the document may exit upwardly,
a print head disposed to traverse said vertical passage for thereby printing lines of print on the document as it moves through said vertical passage,
a platen having a cylindrical surface disposed in said vertical passage opposite said print head for supporting the document during the printing action of the print head,
a pair of rolls located opposite each other one above said print head and the other above said platen and having a nip between them within said vertical passage for gripping the document and being located closely adjacent to said platen and said print head as the print head traverses,
motor means for driving said rolls in such directions so that the rolls propel the document upwardly in said passage, and
a printing machine casing having upper surfaces located above said rolls and providing a document exit opening of said vertical passage.

4,302,117
HIGH SPEED VARIABLE INTENSITY PRINTING SYSTEM
Osamu Tomita, Hachioji, Japan, assignor to Fujitsu Limited, Japan
Filed Jun. 7, 1979, Ser. No. 46,167
Claims priority, application Japan, Jun. 12, 1978, 53/70578
Int. Cl.³ B41J *1/32*
U.S. Cl. 400—166 **14 Claims**

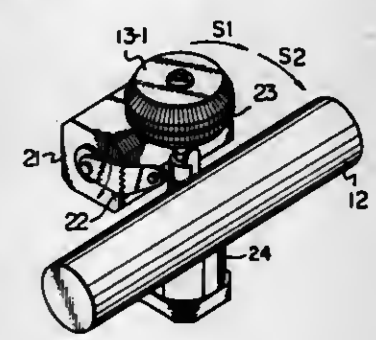

1. A high speed printing system, for printing on a record media, comprising:
means for providing printing data;
a platen for supporting the record media;
a carrier which traverses back and forth in parallel to the platen;
a printing head having a plurality of type elements, said printing head being mounted on the carrier, said printing head being selectively positioned in one of an idling position, an impact position located at said platen, and a floating stable position located between the idling position and the impact position;
first means for rotating the printing head so as to move a selected one of the type elements to a position facing the platen;
second means for hammering the printing head so that the selected type element impacts on the platen, said second means locating said printing head at the idling position when no printing data is being provided, said second means moving said printing head between the floating stable position and the impact position when successive printing data is being provided;
a third means for controlling a variable impact intensity of the selected type element to be applied to the platen said third means operating to supply at least a first energizing current and a second energizing current successively to the second means, said first energizing current having a maximum constant peak amplitude with respect to any of the type elements, and said second energizing current having a peak amplitude which varies in dependence upon the selected type element;
fourth means for spacing said carrier along the platen;
fifth means for supplying information to said third means, said information specifying the peak amplitude of the second energizing current, said information predetermined with respect to each type element; and
sixth means for controlling said third means so as to vary the timing for supplying the second energizing current to said second means in dependence upon the selected type element.

4,302,118
TYPEWRITER CARTRIDGE AND FEED MECHANISM THEREFOR
John O. Schaefer, Lexington, Ky., assignor to International Business Machines Corporation, Armonk, N.Y.
Division of Ser. No. 801,286, May 27, 1977. This application May 22, 1980, Ser. No. 152,207
Int. Cl.³ B41J *33/14*
U.S. Cl. 400—208 **36 Claims**

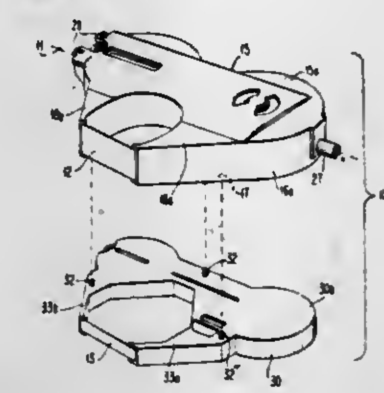

1. A cartridge for a typewriter, said cartridge having a pair of separate chambers in superimposed relation, first and second pairs of spaced apart guide means associated respectively with said chambers in superimposed relation; separate supply and take-up spools in each of said chambers, said supply spools having a fixed axis of rotation and said take-up spools having an axis of rotation along translatory paths, and openings in said cartridge chambers aligned in said paths; and means to bias each of said take-up spools in their respective paths toward said openings; hinge means on said cartridge for coupling said cartridge to a typewriter, said hinge means comprising a pair of ears projecting from said cartridge on opposite sides of at least one of said openings.

4,302,119
MATRIX PRINTER WITH CUTTING DEVICE
Fritz Siegenthaler, Trub, Switzerland, assignor to Autelca AG, Gümligen, Switzerland
Filed Apr. 2, 1980, Ser. No. 136,517
Claims priority, application Switzerland, Apr. 2, 1979, 3043/79
Int. Cl.³ B41J *11/70*
U.S. Cl. 400—621 **8 Claims**

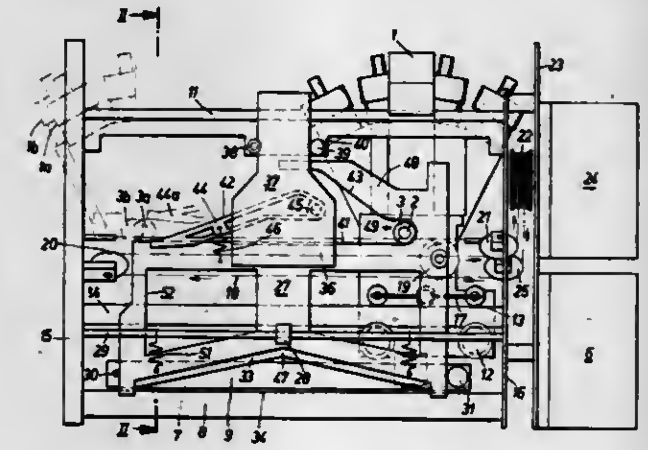

1. A matrix printer comprising a matrix printing head (1), a printing site at said matrix printing head, a cutting device (8,27,37) for imprinted paper leaving the printing site, guide means supporting said matrix printing head for longitudinal displacement forwards and backwards in the line writing direction, a displacement drive mechanism (18-22, 24, 25) connected to said matrix printing head for longitudinal displacement thereof, a drive roller (3) connected to said matrix printing head for displacement therewith, said cutting device including a knife blade (27), means connected guide said knife blade (27) displaceably at right angles to the line writing direction, a driven planar sliding cam drive means connected to said knife blade (27) and including cam carrier means (44,48) and cam means (41,42,43), and said drive roller (3) connected to travel along said cam means (41,42,43) and drive said planar sliding cam drive means.

4,302,120
NIB ASSEMBLY
Thomas A. Ligouri, Poway, Calif., assignor to L.C.R.D. Corp., San Diego, Calif.
Filed Dec. 27, 1979, Ser. No. 107,575
Int. Cl.³ B43K *1/12, 5/16*
U.S. Cl. 401—198 **3 Claims**

1. A nib assembly for use in a marking instrument, comprising:
an elongated nib;
a tip adapter having a first bore and a second bore formed therein, said first bore open to the proximal end of said adapter and said second bore open to the distal end of said adapter wherein the diameter of said first bore is larger than the diameter of said second bore thereby forming an abutment at the point where said first bore intersects said second bore;
a sleeve disposed within said first bore, having a flat end portion, said end portion being perpendicular to the axis of said sleeve, said sleeve having an opening longitudinally therethrough, said opening being eccentric with respect to the axis of said sleeve; and
means for retaining said sleeve in said first bore such that said end portion of said sleeve is in contact with said abutment;
wherein said nib extends through said second bore and through said opening in said sleeve such that said nib is caused to bend radially at the point where it extends from said second bore to said opening in said sleeve and a portion of said nib is caused to abut said end portion of said sleeve, thereby preventing said nib from being pushed up into said marking instrument.

4,302,121
BALL-POINT PEN HAVING THREE SIDES AND COMPLEMENTARY CAP
Jung S. Kim, 5923 Carlton Way, #12, Los Angeles, Calif. 90028
Filed Oct. 19, 1979, Ser. No. 86,595
Int. Cl.^{3} B43K *7/00, 9/00*
U.S. Cl. 401—209 **1 Claim**

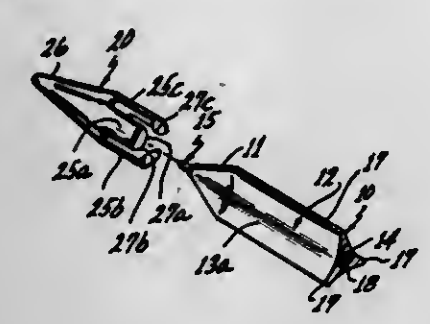

1. A ball-point pen comprising:
a barrel having the length of its periphery formed by three axially extending correspondingly shaped concave surfaces so disposed as to provide a generally triangular cross section therefor with the adjacent sides of said concave surfaces joining to form the three projecting corners of the triangular cross section;
said barrel having a tapered lower end and a central bore therethrough forming a reservoir for ink;
a cylindrical writing member having an axial aperture therethrough and including a metal ball held in a socket on the outer end thereof so as to freely rotate therein;
said cylindrical writing member having a shoulder intermediate the end thereof and having its inner end portion press fitted in the bore on the lower end of the barrel with said shoulder abutting the end thereof;
a filling of viscous ink in the reservoir formed by the bore in said barrel;
an end plug provided with an air vent press fitted in the bore on the upper end of said barrel; and
a removable end cap having a conical portion on one end thereof for receiving the tapered lower end of said barrel and three axially extending angularly spaced peripheral arms on the opposite end thereof, said peripheral arms having convex inner radial surfaces for respectively frictionally engaging the concave surfaces on said barrel.

4,302,122
ROTARY BRUSH INCLUDING STATIONARY GUIDE MEANS WITH SLIDABLE BEARING MEANS
Liborio A. Moya, Catamarca 1711, San Miguel de Tucuman, Argentina
Filed Dec. 10, 1979, Ser. No. 101,447
Claims priority, application Argentina, Dec. 15, 1978, 274837
Int. Cl.^{3} A46B *11/00, 13/02, 17/08*
U.S. Cl. 401—268 **7 Claims**

1. A rotary brush comprising:
a housing having two end walls, a longitudinal sleeve wall therebetween, and a large opening in said sleeve wall extending longitudinally between said end walls;
a hollow cylindrical body mounted rotatably in said housing between said end walls thereof and having a cylindrical wall;
a plurality of brush units mounted on the outer surface of said cylindrical wall of said cylindrical body, each of said brush units comprising bristles extending radially with regard to said cylindrical body, and appearing through said large opening in said housing sleeve wall;
motor means mounted on the outer face of one of said end walls and being coupled to said cylindrical body for imparting rotary movement thereto;
paint-supply means connected to the interior of said hollow cylindrical body and adapted for supplying pressurized liquid paint to said interior and to passage means in said cylindrical wall of said cylindrical body, leading from said interior of the latter to between said bristles of said brush units, and being adapted for passing liquid paint on to said bristles;
a number of stationary guide rings rigidly mounted inside said housing in transverse zones arranged in spaced relationship to one another and to said end walls of said housing and guidingly surrounding said cylindrical body; and

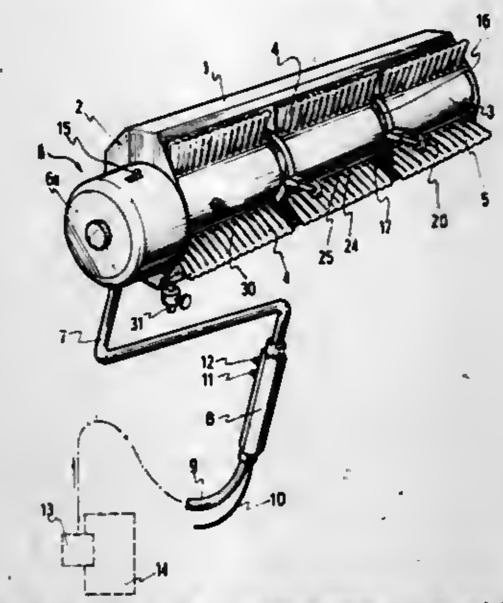

radially slidable bearing means mounted on said stationary guide rings to project outwardly from said large opening of said housing, said radially slidable bearing means being adapted for bearing against a surface to be painted and limiting contact pressure, at points distributed over the length of said cylindrical body of the bristles of the respective brush units which are in contact with said last-mentioned surface.

4,302,123
CLASP ELEMENT
Wolfgang Dengler, Thorwaldsenstrasse 23, München 2, Fed. Rep. of Germany (8000), and Hans Vetter, Stuttgart, Fed. Rep. of Germany, assignors to Wolfgang Dengler, Munich, Fed. Rep. of Germany
Filed Nov. 23, 1979, Ser. No. 96,816
Claims priority, application Fed. Rep. of Germany, Nov. 24, 1978, 2850942
Int. Cl.^{3} B42F *13/12, 13/36*
U.S. Cl. 402—80 R **17 Claims**

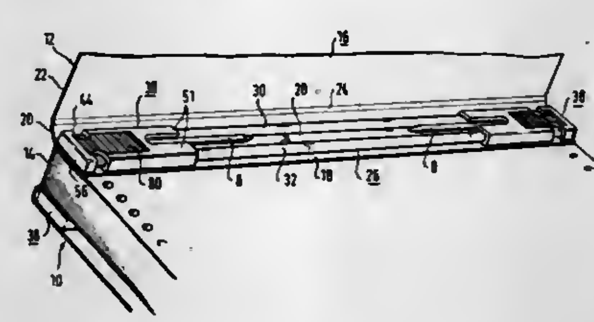

1. In a clasp element for a loose-leaf binder which comprises a U-shaped retaining bar with beaded edges aadapted to be connected with a file cover, a slide which engages said beaded edges and is mounted to slide to and fro thereon between a filing setting and a stacking setting and has longitudinal webs which depend into the U-profile of the retaining bar to form a central groove for a flexible filing spike the end of which is adapted to be inserted through an opening in the retaining bar and to be bent over on movement of the slide, from stacking setting toward filing setting, the improvement which comprises; tongues (51) dispersed over said beaded edges and spaced to form a catching space (48) for the filing spike (8) at the inner end of the slide (38), an end strip (56) covering the cross-sectional profile of the retaining bar (26) at the outer end of the slide (38) and, a ramp (76) in said central groove 66 sloping downwardly from the catching space (48) and away therefrom, whereby, on movement of said slide, said filing spike is engaged by the inner end of said ramp and then, on further inward movement of said slide, it is bent over and pressed down by said ramp.

4,302,124
CONNECTORS
Gerhard Wilks, Seilermeister Braunstrasse 43; Gunter Grossmann, Werkzeugmacher Kotzenbruhlstr. 8, both of 8940 Memmingen, and Franz Sanz, Werkzeugmacher Anton-Kanz-Str. 10, 7918 Illertissen, all of Fed. Rep. of Germany
Filed Jul. 17, 1979, Ser. No. 58,178
Claims priority, application Fed. Rep. of Germany, Jul. 22, 1978, 2832300
Int. Cl.^{3} A44B *21/00*
U.S. Cl. 403—391 **3 Claims**

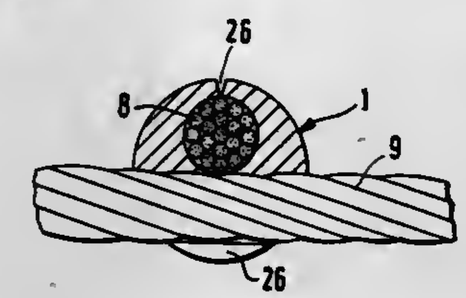

1. In a connector for connecting together two strands of cables, ropes or the like, wherein an integral deformable connecting member blank has a plurality of grooves therein to receive said strands and is deformed to secure said strands in said grooves, the improvement comprising said blank being made of pressure-deformable material and having an exterior shape in the form of a double cone made by two truncated cones joined at their bases and a cone angle between 10° and 20°, a U-shaped slot extending from each oppositely disposed face of said blank toward the middle thereof, each slot having a width substantially equal to the diameter of the strands to be received therein and being curved at its inner end to substantially conform to the configuration of the strand to be received therein, said shape and size of said blank being predetermined according to the size of said strands so that upon deformation of said blank to secure said strands in said slots by a die means, the sides of said slots will firmly engage said strands and the blank will be of substantially spherical shape.

4,302,125
GROUND AREA MARKER, ESPECIALLY FOR A GOLF COURSE
Brown Cullen, Jr., 3611 Holston Rd., Louisville, Ky. 40222
Filed Dec. 5, 1978, Ser. No. 966,735
Int. Cl.^{3} E01F *9/02*
U.S. Cl. 404—9 **6 Claims**

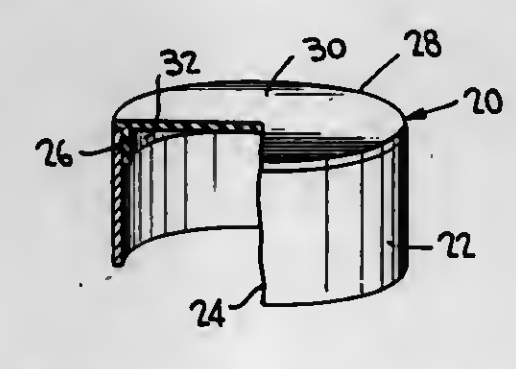

1. A ground area marker specifically adapted for marking areas of a golf course comprising:
(a) a hollow rigid body portion having opposing upper and lower ends with the lower end being open and being adapted to be inserted under pressure on the upper end into the ground so that the body portion is embedded up to its upper end into the ground; and,
(b) means operatively attached to said open upper end for closing off the open upper end defining a ground level top wall for the body portion and being unsupported in the central portion of said open upper end, said means being constructed of an extremely flexible resilient plastic material so that a golf ball in striking the top wall would not unduly bounce but rather would react in the same fashion as when striking the surrounding ground.

4,302,126
MANHOLE COVER SUPPORT RING
Raymond L. Fier, 5323 Pin Oak Ave., NW., Massillon, Ohio 44646
Filed Dec. 27, 1979, Ser. No. 106,886
Int. Cl.^{3} E02D *29/14*
U.S. Cl. 404—26 **15 Claims**

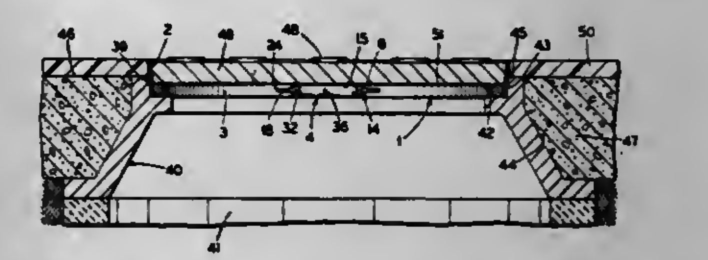

1. Ring construction for supporting a manhole cover in an elevated position within a manhole frame including:
(a) circular ring means having inwardly projecting manhole cover supporting ledge means and upwardly extending flange means, said ring means being split at least at one point on its periphery forming a pair of spaced end portions;
(b) a pair of bolt means, each being pivotally mounted on a respective end portion of the ring means and extending toward each other within the periphery of the ring means; and
(c) connector means threadedly engaged with and extending between the pair of bolt means for expanding the ring means outwardly when the connector means is rotated in a first rotational direction to force the flange means into abutting engagement with the manhole frame and for contracting the ring means inwardly when the connector means is rotated in a second rotational direction enabling the ring means to be placed within the manhole frame.

4,302,127
APPLICATOR AND DISTRIBUTOR ASSEMBLY
Harry Hodson, 4730 Dunn Dr., Sarasota, Fla. 33583
Filed Nov. 13, 1979, Ser. No. 93,846
Int. Cl.^{3} E01C *19/38*
U.S. Cl. 404—102 **17 Claims**

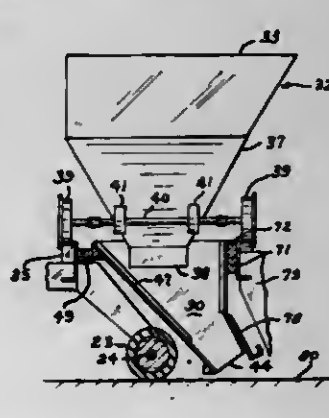

1. An applicator and distributor assembly of the type primarily designed to apply discontinuous pervious cementitious

material over a given surface area, said assembly comprising: a support frame including a leading and a trailing portion, running gear movably connected in supporting engagement to said frame and disposed in movable engagement with the surface being treated, a distributor casing mounted on said support frame in communicating relation to the treated surface and including a substantially elongated configuration extending transverse to the direction of assembly travelled over and along a length of surface area being treated, said distributor casing is pivotally attached to said support frame and movable in a displacable manner continuously during distribution of the cementitious material, whereby the material within said distributor casing is shocked to aid flow from said distributor casing, displacement means secured to said support frame and disposed in continuous periodic interruptive contact with said distributor casing, said displacement means disposed and structured for displacing movement of said distributor casing upon each periodic contact therewith, a casing outlet means formed in lower portion thereof in spaced above relation to the surface being treated, said displacement means is rotatably mounted on said support frame running gear and in continuous periodic interruptive engagement with said distributor casing, said distributor casing pivotally mounted for periodic displacement aiding flow of the cementitious material from said distributor casing through said casing outlet means, finishing means disposed substantially adjacent a trailing portion of said assembly and disposed adjacent said casing outlet means and down stream thereof in direct engageable relation with cementitious material flowing from said distributor casing through said outlet means, said finishing means movably secured to said support frame in compressing engagement with the layer of material disposed on the surface area.

4,302,128
ASPHALT SEALING MACHINE
Gary G. Thatcher, Rte. 1, Box 253, Van Wert, Ohio 45891
Filed Oct. 1, 1979, Ser. No. 80,826
Int. Cl.³ E01C *19/15*
U.S. Cl. 404—111 **6 Claims**

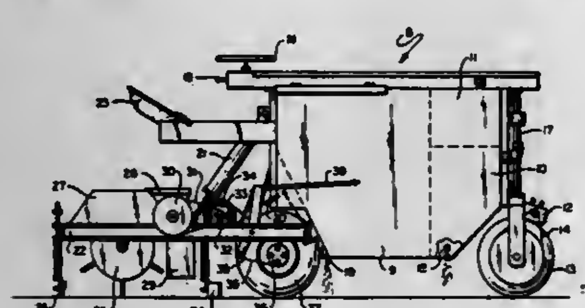

1. An asphalt sealing machine comprising body means including reservoir means for storing and distributing fluid, wheel means movably supporting said body means, support means pivotally supported on and extending from said body means, a container on said support means adapted to hold sand, said container housing a horizontally positioned rotatable cylindrical dispenser, the entire surface of said cylindrical dispenser being covered with a plurality of small cups, a horizontally disposed restrainer extending parallel to said cylindrical dispenser adjacent to the upper edges of said cups to insure that said cups have equal volumes of sand therein, said cylindrical dispenser only being rotatable when said asphalt sealing machine is in motion, spreader means supported by said support means and drive means on said support means for rotating said cylindrical dispenser, whereby a uniform quantity of sand is dispensed onto previously dispensed fluid and mixed therewith.

4,302,129
VIBRATORY COMPACTING ROLLER
Bruno Arenz, Düsseldorf, Fed. Rep. of Germany, assignor to Losenhausen Maschinenbau AG, Fed. Rep. of Germany
Continuation of Ser. No. 936,873, Aug. 25, 1978, Pat. No. 4,227,827. This application Oct. 10, 1979, Ser. No. 83,222
Claims priority, application Fed. Rep. of Germany, Sep. 1, 1977, 2739338
Int. Cl.³ E01C *19/28*
U.S. Cl. 404—117 **13 Claims**

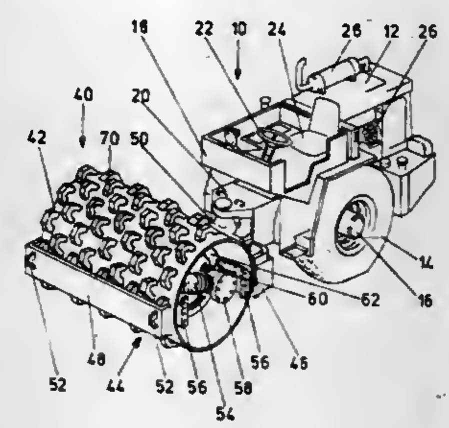

1. A vibratory compacting roller apparatus, comprising:
a frame;
a roller drum, rotatingly received in said frame;
drive means, connected to said roller drum, for driving said roller drum;
vibrating means, connected to said roller drum, for vibrating said roller drum;
a plurality of substantially trapezoidal shape tamping elements disposed about an outer cylindrical surface of said roller drum, each of said tamping elements having disposed therein a recess open toward said outer cylindrical surface, said roller drum and tamping elements being so arranged and constructed that a total weight of said roller drum and said tamping elements is substantially equal to a weight of a plain roller drum of the same overall diameter; and
wherein each of said substantially trapezoidal shape tamping elements is further characterized as including an elongated ground engaging surface having a length greater than a projecting height of said tamping element.

4,302,130
GAS PLATFORM
Olav Mo, Gronsundveien 94, 1360 Nesbru, Norway
Filed Mar. 21, 1979, Ser. No. 22,645
Claims priority, application Norway, Mar. 30, 1978, 781109
Int. Cl.³ E02B *17/00;* **E02D** *29/00, 29/06;* **F17C** *1/00*
U.S. Cl. 405—210 **6 Claims**

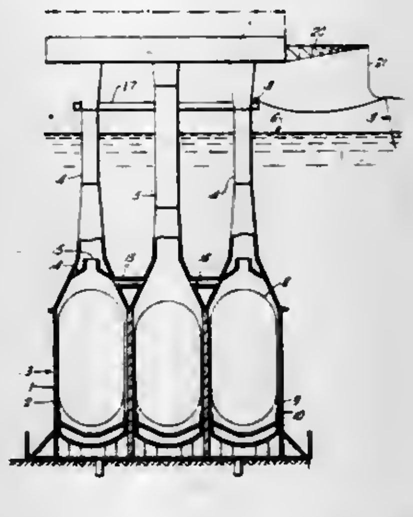

1. An offshore platform with a storage facility for storing natural products such as liquid gas, said platform comprising a plurality of concrete cells, a plurality of storage tanks, individual ones of said tanks being respectively disposed within individual ones of said concrete cells below sea level and being completely exposed to atmospheric conditions, said storage tanks being cylindrical in shape and including a convex curved termination portion at both ends thereof, said tanks being oriented with the longitudinal axis thereof upright, each of said plurality of tanks being supported by a skirt structure formed by extension of the cylindrical tank wall.

5. An offshore platform with a storage facility for storing natural products such as liquid gas, said platform comprising one central and six peripheral cells, all of the seven cells extending above the sea level, at least one of said cells containing a storage tank disposed therein below sea level under atmospheric conditions, said storage tank being cylindrical in shape and including a convex curved termination portion at both ends thereof.

4,302,131
ANCHOR ELEMENTS
John V. Brown, Granborough, England, assignor to Fosroc International Limited, England, England
Filed Jun. 18, 1979, Ser. No. 49,839
Int. Cl.³ E21D *20/02*
U.S. Cl. 405—260 **14 Claims**

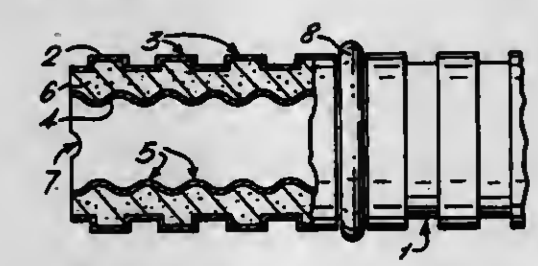

1. A method of at least double corrosion proofing an anchor element on site outside a hole in a substrate, in which hole the anchor is to be installed, comprising
(i) at the site locating a sufficient number of lengths of corrosion proof sleeve in end-to-end relation about an end portion of the anchor element to cover the length of the element to be corrosion proofed while the element is outside the hole,
(ii) applying a cap to the sleeve at the end of the anchor element, the cap having an inlet for self-setting composition, and being secured to the anchor element,
(iii) supplying a self-setting composition through the inlet, via the cap, into an annular clearance between the element and the sleeve there to set to secure the sleeve to the element,
(iv) locating the formed corrosion proofed anchor element in the hole in the substrate and
(v) grouting the element in the hole.

4,302,132
METHOD OF INJECTING GROUT INTO SOIL
Taihei Ogawa, Musashino; Seizo Kubota, Murayama; Mineo Murata, Tokyo, and Shigeru Sekita, Yamato, all of Japan, assignors to Sato Kogyo Kabushiki Kaisha, Toyama and Yamaguchi Kikai Kogyo Kabushiki Kaisha, Tokyo, both of, Japan
Filed Aug. 28, 1979, Ser. No. 70,291
Claims priority, application Japan, Aug. 30, 1978, 53-105914
Int. Cl.³ E02D *3/12*
U.S. Cl. 405—269 **8 Claims**

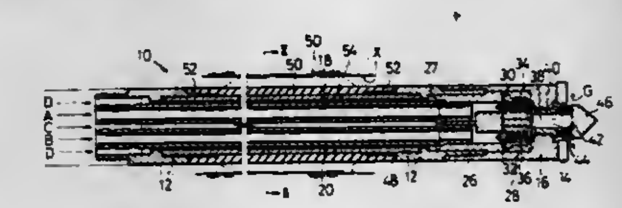

1. A method of injecting grout into soil using a combined injection and boring rod wherein said rod comprises a boring tip and at least one injection nozzle at the lowermost end thereof; a sleeve packer of an elastomeric material which is embedded in a recess in the periphery of said rod along the length thereof; and a plurality of passages extended in and along said rod, said passages being defined by more than one of parallel inner tubes in an outer tube and by the spacing between the outer tube and the inner tubes; said method comprising the steps of inflating said sleeve packer by introducing fluid pressure into said recess through a hole in said outer tube, which hole communicates with one of said passages; feeding two liquids of curable grout through respective passages; mixing said two liquids within said rod at said boring tip of said rod; and injecting the mixed grout into the soil from said injecting nozzle.

4,302,133
DEVICE FOR SUPPORTING A GALLERY OR A TUNNEL
Wilhelm Althaler, Vienna, and Alfred Zitz, Zeltweg, both of Austria, assignors to Voest-Alpine Aktiengesellschaft, Vienna, Austria
Filed Apr. 3, 1979, Ser. No. 26,728
Claims priority, application Austria, May 31, 1978, 3963/78
Int. Cl.³ E21D *15/44, 19/00*
U.S. Cl. 405—290 **6 Claims**

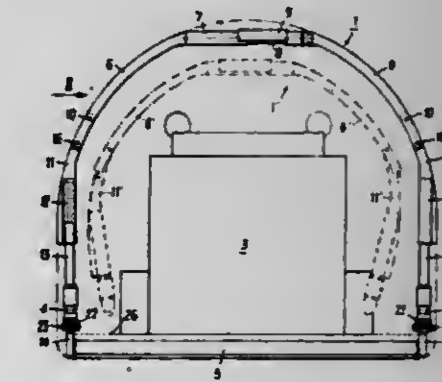

1. Apparatus for supporting a gallery or tunnel drifted by a mining machine comprising: a plurality of longitudinally-spaced provisional support frames, each including a cap-like central portion and two side elements hinged on the central portion and adjustable in length by means of a cylinder and piston unit, the central portion and side elements forming a U-shaped frame which is reducable from an expanded condition to a frame size narrower than the inner width of a previously positioned expanded provisional support frame; a plurality of transverse floor girders each having opposite ends, the opposite ends of at least one girder being releasably connected to the lower ends of the side elements of a provisional support frame; and at least one permanent U-shaped support frame supporting the roof of the gallery, said permanent support frame having side elements the lower ends of which are connected to the ends of a transverse floor girder from which a provisional support frame has previously been disconnected.

4,302,134
CAPTURING ARTICLES EJECTED FROM A CARRIER AND REDIRECTING SUCH ARTICLES
Anderson F. Johnson, Jr., Sinking Spring, and Fred J. Reinhard, Whitfield Reading, both of Pa., assignors to Western Electric Co., Inc., New York, N.Y.
Filed May 23, 1980, Ser. No. 153,103
Int. Cl.³ B65G *51/02*
U.S. Cl. 406—51 **14 Claims**

1. Apparatus for capturing an elongated article ejected from a carrier and redirecting such article, comprising:
means for ejecting the article in an ascendent path from a position on the carrier;
a trough located in the path of the article, continuously

facing toward the article position and oriented substantially parallel thereto, for capturing the ejected article in the trough;

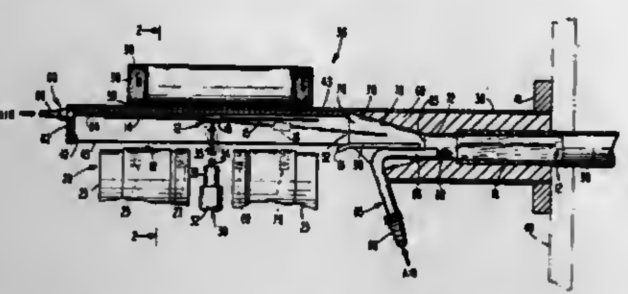

means for removably holding the article in the trough such that the article is oriented parallel to a portion of a desired pathway; and

means for propelling the oriented article along and from the trough and along the desired pathway.

4,302,135

ROTARY CUTTING TOOL

Charles R. Lillie, Rogers, Ak., assignor to TRW Inc., Cleveland, Ohio

Filed Mar. 26, 1980, Ser. No. 134,252

Int. Cl.³ B23B *27/10;* B23P *15/28*

U.S. Cl. 408—59 **8 Claims**

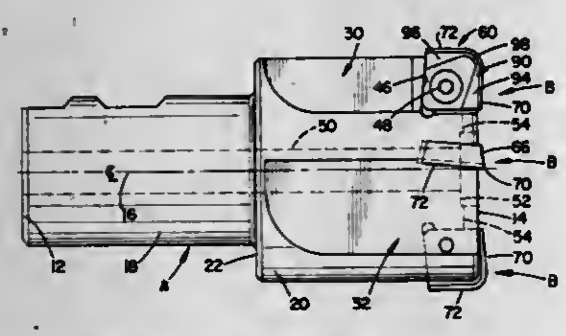

1. A rotary cutting tool comprising:

an elongated generally cylindrical body having a longitudinal axis extending between first and second terminal body ends, a portion of said body adjacent said first end comprising a shank portion and a portion of said body adjacent said second end comprising a cutting portion;

at least one groove extending axially of said body along at least a section of said cutting portion to said second end and terminating in an insert receiving pocket;

a coolant flow passage in said body including an inlet in said shank portion and an outlet in said cutting portion, said flow passage being configured to permit at least some portion of a coolant passed therethrough to flow toward communication with said insert receiving pocket;

a cutting insert disposed in said receiving pocket having a first cutting edge having a length less than the radius of said body second end and extending radially of said body at a location axially outward of said second end, said first cutting edge extending from an innermost end disposed radially outward of said longitudinal axis to an outermost end disposed at least slightly beyond the radial outermost area of said body second end, said cutting insert including a distinct coolant flow groove in the outer face of said insert generally following the contour of said first cutting edge adjacent thereto and generally coextensive therewith, said flow groove having a distinct coolant entrance area in fluid communication with said body coolant flow passage outlet and a distinct coolant exit area spaced from said entrance area, whereby coolant introduced under pressure to said body coolant flow passage at said inlet during a material removal operation will pass therethrough and along said coolant flow groove for providing hydro-static chip support and a thermoshield for reducing cutting temperatures.

4,302,136

HELICAL CONICAL SPRING LOCK-WASHER AND METHOD OF FORMATION THEREOF

Michio Abe, c/o Abe Gijutsu Consultant, No. 119, 2-Chome, Mino-Cho, Kasugai-Shi, Aichi-Ken, and Tomio Urokohara, No. 15, 4-Chome, Yasui-Cho, Kita-Ku, Nagoya-Shi, both of Japan

Continuation of Ser. No. 911,087, May 31, 1978, abandoned. This application Dec. 20, 1979, Ser. No. 105,638

Claims priority, application Japan, Jun. 20, 1977, 52-73136

Int. Cl.³ F16B *39/24;* B21D *53/20*

U.S. Cl. 411—158 **9 Claims**

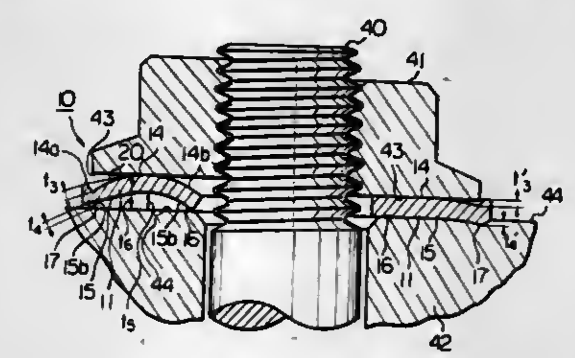

1. A helical conical spring lock-washer for fitting between a fastening device and a member to be fastened by said fastening device, said lock-washer comprising:

a washer body formed of a helically wound thin band of metal with a central axial opening therethrough;

said washer body having an upper bearing surface dimensioned to be substantially the same size as an underside of a fastening device and adapted to be contacted thereby;

said washer body having a lower bearing surface adapted to contact a member to be fastened;

said washer body having an inner circumferential edge defining said opening and an outer circumferential edge;

said washer body being divided at a position extending between said inner and outer circumferential edges, thereby defining adjacent ends of said washer body, said ends being axially spaced;

said washer body having a transverse radial cross-sectional configuration when in the nondeformed state, such that, between said inner and outer circumferential edges, said upper bearing surface is convex and said lower bearing surface is concave, said upper and lower bearing surfaces extend in axially inclined directions from said outer circumferential edge, whereby said washer body has a generally conical portion, said conical portion being adjacent the outer marginal portion of said washer body, and the inner marginal portion of said washer body being in the form of a crown which is inclined axially opposite of the direction of inclination of said conical portion;

a plurality of triangular pyramid depressions formed in said washer body from said upper bearing surface thereof to said lower bearing surface thereof, said depressions forming correspondingly positioned and shaped projections extending outwardly from said lower bearing surface, said projections being smaller in size than said depressions, said depressions forming triangular shaped openings in said upper bearing surface, each said triangular shaped opening having a base facing said outer circumferential edge and an apex directed toward said central opening, and each said depression having a first inner side face gently inclined generally in the tightening direction of a fastening device and a second inner side face steeply inclined in a direction generally opposite to said tightening direction; and

said washer body having a resiliency such that said washer body may be deformed into a flat shape upon a complete tightening of the fastening device.

4,302,137

ANTI-TAMPER FASTENING MEANS

Henry Hart, 86 Manor Rd., Chiswell, Essex, England

Filed Oct. 25, 1978, Ser. No. 954,528

Int. Cl.³ F16B *37/00*

U.S. Cl. 411—432 **5 Claims**

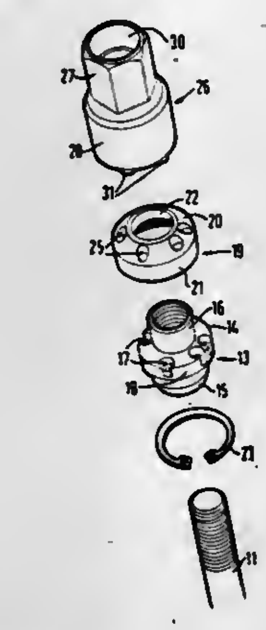

2. Fastening means comprising:

a spanner component;

locating pins disposed upon said spanner component;

a threaded fastening element selected from nuts and headed bolts having a smooth edge surface defined about the periphery thereof so as to prevent the rotation thereof with conventional tools; and

bores defined within said fastening element for engagement by said pins of said spanner component so as to facilitate the rotation of said fastening element by said spanner component, the improvement comprising in combination:

(a) said fastening element comprises a radially outwardly projecting flange disposed intermediate its axial ends, and wherein said bores are defined within said flange;

(b) a sleeve rotatably mounted coaxially upon said fastening element and at least partially covering said smooth edge surface of said fastening element, said sleeve comprising a first portion extending axially beyond said flange; and a second portion extending radially inwardly from said first portion and at least partially overlying said bores of said flange, said second sleeve portion having defined therein apertures for alignment with said bores of said fastening element so as to facilitate engagement of said locating pins of said spanner component within said bores of said fastening element;

(c) retainer means removably mounted upon said first sleeve portion at a position axially beyond said flange of said fastening element and projecting radially inwardly from said first sleeve portion for removably retaining said sleeve upon said fastening element; and

(d) tool-engaging means defined upon said retainer means for facilitating removal of said retainer means from said first sleeve portion, and means defined between said first sleeve portion and said fastening element for providing access to said tool-engaging means.

4,302,138

REMOTE HANDLING DEVICES

Alain Zarudiansky, 22 rue Exelmans, 78140 Velizy, France

Filed Jan. 22, 1979, Ser. No. 5,560

Claims priority, application France, Feb. 1, 1978, 78 02714

Int. Cl.³ B25J *3/00, 21/02*

U.S. Cl. 414—5 **16 Claims**

1. A device for remotely handling an object, the device comprising a gripping device formed by a plurality of articulated elements for reproducing, at least in part, the structure of a human hand; means for receiving the hand of an operator and including position detectors disposed to sense the instantaneous spatial position of the movable parts of the hand of the operator and to produce signals representative thereof; and a control device for controlling the instantaneous spatial position of said articulated elements in response to the signals produced by said receiving means, the control device being operative to reproduce, for each articulated element of the gripping device, the instantaneous position of the analogous moving part of the hand of the operator, wherein at least one of the said articulated elements is provided with at least one sensor for sensing a tactile parameter, and for providing signals representative

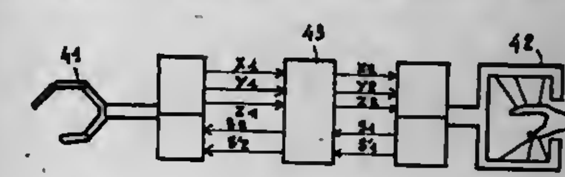

thereof, whereby said tactile parameter representative signals are also representative of contacts of said articulated element with the object, and wherein the receiving means comprises actuator means for receiving said tactile parameter representative signals and applying to the hand of the operator sensations representative of said tactile parameter, wherein the actuator means comprises a plurality of actuators, and the receiving means comprises a support for supporting said actuators, and a plurality of members, such as rings or collars, for receiving respective movable parts of the hand of the operator, the actuators being connected between the support and respective ones of said receiving members.

4,302,139

MATERIAL HANDLING IMPLEMENT PARTICULARLY SUITED FOR TRANSPORTING ROUND HAY BALES

Elton K. Malish, Rte. 2, Box 87, Taylor, Tex. 76574

Filed Mar. 28, 1980, Ser. No. 135,101

Int. Cl.³ A01D *87/12;* A01K *5/00*

U.S. Cl. 414—24.5 **4 Claims**

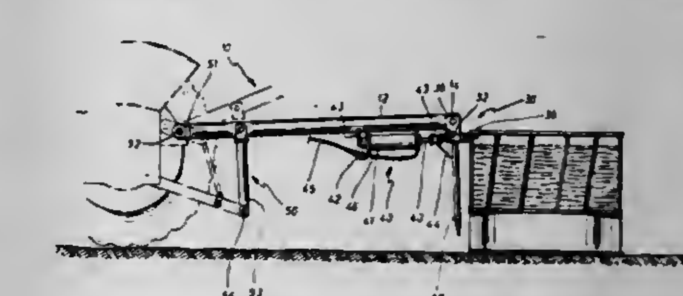

1. A material handling implement, comprising:

a frame member having coupling means on a first end thereof for hitching the frame to a prime mover such that the second distal end of the frame may be raised and lowered;

a yoke pivotally mounted to the second end of the frame, such that opposed arms of the yoke extend laterally to each side of the frame;

a hook secured to each arm of the yoke to extend generally rearwardly of the frame when the yoke is in a first pivoted position, so that the hooks may be used for transporting and placing equipment such as round hay bale feeders;

a spear mounted on the yoke such that the spear extends generally downwardly when the yoke is in the first pivoted position and extends generally rearwardly of the frame when the yoke is in a second pivoted position; and

means for pivoting the yoke between said first and second pivoted positions said pivoting means including a hydraulic piston and cylinder interconnected between the frame and the yoke and including hydraulic fluid lines for interconnection to the hydraulic power source of the prime mover.

4,302,140
PALLETIZER

Bernard P. Donnelly, and Roland W. VanSlooten, both of Holland, Mich., assignors to The Lithibar Company, Holland, Mich.
Division of Ser. No. 913,565, Jun. 8, 1978, Pat. No. 4,234,280. This application Dec. 28, 1979, Ser. No. 108,138
Int. Cl.³ B65G *57/09*
U.S. Cl. 414—46 6 Claims

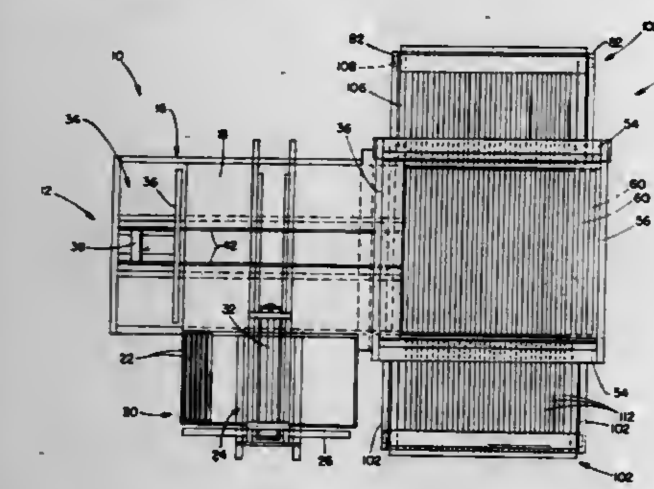

1. An apparatus for stacking layers of articles of the type including a generally horizontal support defining a layer preparation area; said apparatus comprising:
article stacking means positioned adjacent said layer preparation area for receiving a prepared layer of articles and stacking multiple layers of articles;
loading means movable along said layer preparation area for moving a prepared layer of articles to said article stacking means; and
ejection means positioned adjacent said article stacking means for ejecting stacked layers of articles from said stacking means, said ejection means comprising:
an open frame selectively engaged by said loading means for movement into said article stacking means;
a pusher plate slidably mounted for vertical movement on said frame;
shifting means for shifting said plate from a first position above said layer preparation area whereby said loading means may move a prepared layer through said frame and onto said article stacking means when said open frame is disengaged from said loading means to a second position wherein said plate engages the stacked layers of articles when said open frame is engaged to said loading means and said loading means moves towards said article stacking means whereby a stacked layer of articles is ejected from said article stacking means.

4,302,141
BALE DESTACKER

Marvin E. Miguel, P.O. Box 404, Armona, Calif. 93202
Filed Jun. 29, 1979, Ser. No. 53,401
Int. Cl.³ B65G *59/02, 47/24*
U.S. Cl. 414—119 15 Claims

4. An article destacking device for hexahedral articles having a pair of oppositely disposed first sides, a pair of oppositely disposed second sides, and a pair of oppositely disposed ends, comprising:
a frame having means defining a chamber therein for receiving a stack of articles;
an elevator mounted in said frame and disposed to move vertically in said chamber to elevate said stack in said frame in one tier steps;
a tier pusher mounted in said frame and disposed to push articles on the top of said stack out of one side of said chamber;
a transfer compartment disposed to receive articles pushed from the top portion of said chamber by said tier pusher, said transfer compartment being operatively associated with said frame and adjacent the side thereof from which said articles are pushed, said transfer compartment including an exit gate at one end thereof;
article conveyance means disposed in said transfer compartment and operable to move articles deposited therein along a path of travel through said exit gate: and
article orienting means operatively associated with said frame and disposed to receive articles moved through said exit gate and to individually orient said articles to a common position, said article orienting means including an inclined ramp with an upper portion and a lower portion, whereby a tipping edge is formed at the junction therebetween, and said upper portion further includes a down-

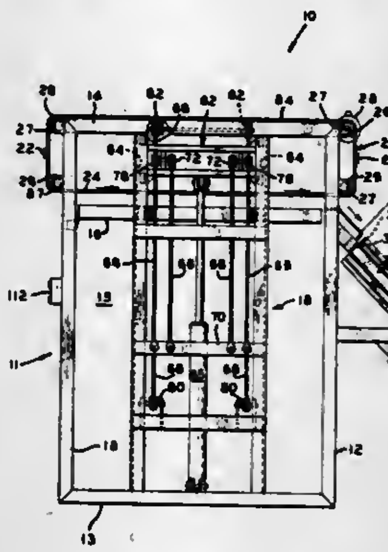

ward step at its junction with said exit gate of said transfer compartment, said step being extended across said exit gate and having a height slightly greater than half the width of one of the second sides of said articles, and said upper portion further having means defining a turning edge disposed generally vertically at the edge of said exit gate on the downward side of said ramp, and said upper portion further having a deflecting wall disposed opposite said exit gate and extending generally parallel thereto in spaced relationship therefrom a distance slightly greater than the width of one of the first sides of said article and extending down from the edge of said ramp upwardly with respect to said incline a distance substantially equal to the width of one of the first sides of said article.

4,302,142
APPARATUS FOR AUTOMATICALLY LOADING EGGS DIRECTLY FROM STACKS OF EGG-FILLED FLATS

Henry Y. Kuhl, and Paul R. Kuhl, both of Flemington, N.J., assignors to Kuhl Corporation, Flemington, N.J.
Filed Jan. 23, 1980, Ser. No. 114,538
Int. Cl.³ B65G *59/10*
U.S. Cl. 414—120 16 Claims

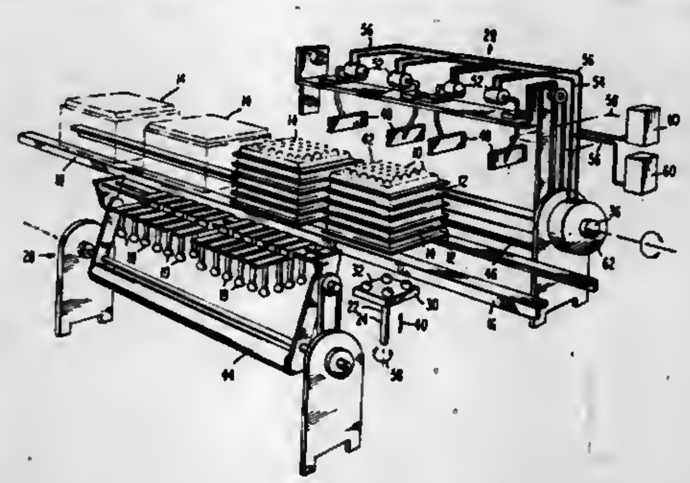

1. An apparatus for automatically loading eggs directly from

stacks of alternately rotatably oriented flats of eggs comprising:
(a) a stack supply means for conveying stacks of egg-filled flats to a loading station;
(b) an egg removal means located adjacent the loading station and adapted to remove eggs from the uppermost flat of each stack of flats;
(c) a flat removal means positioned adjacent the loading station and adapted to remove from each stack of flats an uppermost empty flat after the eggs have been removed therefrom by said egg removal means; and
(d) a stack rotation means located adjacent the loading station and adapted to rotate each stack of flats approximately 90° after each empty uppermost flat has been removed to orient the resulting uppermost egg-filled flat with respect to said egg removal means to facilitate removal of eggs therefrom and with respect to said flat removal means to facilitate removal of flats therefrom.

4,302,143
DEVICE FOR FILLING A CONTAINER WHICH IS UNDER PRESSURE

Albert Grimminger, Leonberg, and Werner Wiedmann, Stuttgart, both of Fed. Rep. of Germany, assignors to Werner & Pfleiderer, Stuttgart-Feuerbach, Fed. Rep. of Germany
Filed Nov. 9, 1979, Ser. No. 92,736
Claims priority, application Fed. Rep. of Germany, Dec. 29, 1978, 2856617
Int. Cl.³ C10J *3/30*
U.S. Cl. 414—173 10 Claims

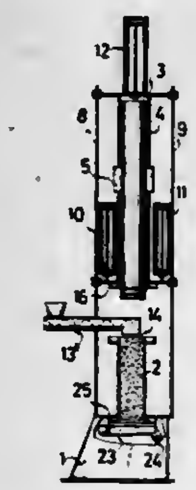

1. Apparatus for charging solids into a pressurized container comprising a tubular lock chamber on the container, said lock chamber having an inlet for receiving solids to be supplied to the container and an outlet for supplying the solids to the container, valve means at the outlet of said lock chamber, feed means for supplying solids to said inlet of the lock chamber, a housing mounted adjacent said lock chamber for movement towards and away therefrom, a displacer member slidably mounted in said housing in axial alignment with said inlet of the lock chamber, first seal means in said housing sealingly engaging said displacer member, said lock chamber and said housing having opposed respective surfaces which contact one another when the housing has been moved to an operative position in which the displacer member is extendable to force solids in said lock chamber into said container with said valve means open, second seal means on one of said opposed surfaces for sealing said surfaces, said displacer member having a retracted position within said housing when extracted from said lock chamber, said first seal means being axially located along said displacer means at a distance from the surface of the housing which contacts the opposed surface of the lock chamber, said distance exceeding the stroke of the displacer member in its travel between its extended and retracted positions whereby the portion of the displacer member which penetrates into the lock chamber will not come into contact with the first seal means.

4,302,144
WORK CHANGING MECHANISM FOR MACHINE TOOLS

Ellert Hallqvist, Vesteras, Sweden, assignor to MT Machine Company AB, Sweden
Filed Nov. 5, 1979, Ser. No. 90,961
Claims priority, application Sweden, Nov. 13, 1978, 7811714
Int. Cl.³ B23Q *7/04*
U.S. Cl. 414—590 3 Claims

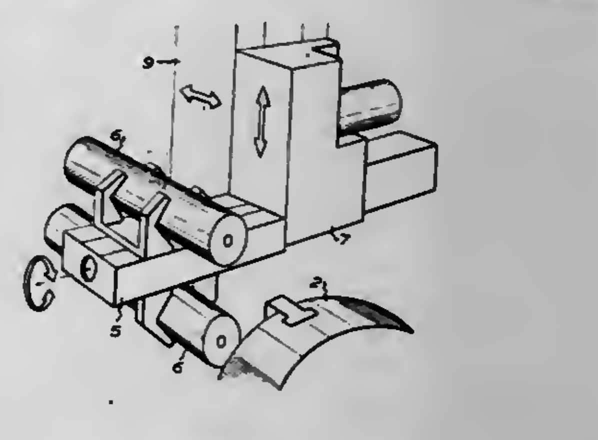

1. A work changing mechanism for machine tools, designed for automatic change of work pieces to be clamped therein, comprising a shuttle car (9) movable in the direction of the machine tool spindle axis, a slide (7) vertically movable along the shuttle car and, gripping means (5) mounted on the slide in rotatable relationship about a horizontal shaft extending transversely to the machine tool spindle axis, said gripping means (5) including a first and second pair of jaws which are horizontally displaceable parallel to said shaft on opposite sides thereof, means for selectively moving each jaw of said pairs of jaws toward and away from the jaw forming one of said pairs, said first pair of jaws being adapted to feed a work piece into the machine tool to be clamped therein for a machine operation and the second pair to withdraw a machined work piece from the machine tool.

4,302,145
AUTOMATIC DRAWBRIDGE FOR ELEVATOR

William C. Heisler, Monroe, N.C., assignor to The Peelle Company, Bay Shore, N.Y.
Filed Nov. 19, 1979, Ser. No. 95,358
Int. Cl.³ E04H *6/06*
U.S. Cl. 414—608 13 Claims

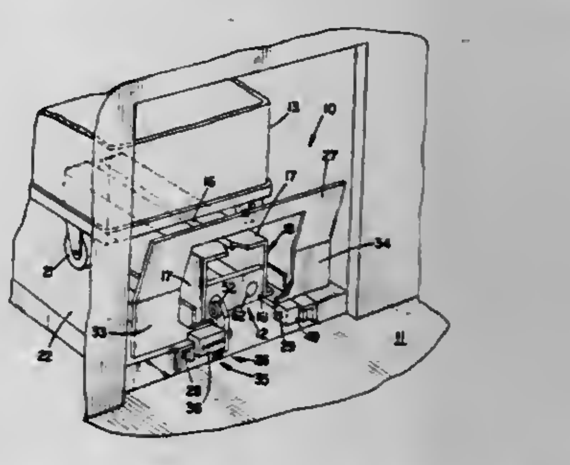

1. In an elevator system comprising a car vertically movable in a shaft between successive landings and including a floor indexable with such landings, the car having an automatic cart loader and unloader including a movable cart transfer device, a drawbridge mounted on the car and movable between a retracted position substantially entirely within the shaft and an

extended, generally horizontal position laterally beyond the shaft, the drawbridge being constructed and arranged to bridge any gap between the floor of the car and an adjacent landing, actuator means on the car directly responsive to loading and unloading and movement of the cart transfer device to extend and retract the drawbridge, said actuator means being constructed and arranged to transmit mechanical energy from said transfer device during movement thereof to said drawbridge for extension of the landing.

4,302,146
PROBE POSITIONER
James W. Finlayson, Belle Vernon; Renato D. Reyes, Monroeville; Ralph F. Eberle, Leechburg; Thaddeus A. Wojcik, Greensburg; James L. Gumbert, McKeesport; Robert B. McKeever, Greensburg; Emery E. Nagy, Pricedale, and Howard E. Houserman, Jr., Pittsburgh, all of Pa., assignors to Westinghouse Electric Corp., Pittsburgh, Pa.
Filed Aug. 23, 1978, Ser. No. 936,297
Int. Cl.³ B25J *5/00*
U.S. Cl. 414—744 R **10 Claims**

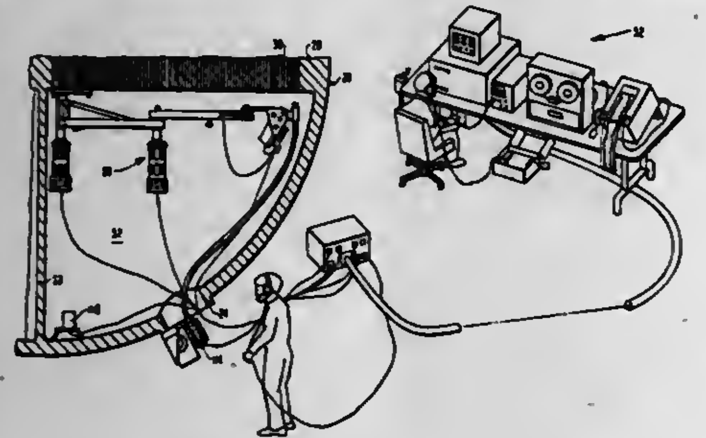

1. A probe positioner for positioning probes in steam generators comprising:
a support plate having a plurality of holes therein arranged to correspond to the tubes in a steam generator upon attachment of said support plate to said tubes thereby providing access to said tubes through said holes for probing said tubes;
removable guide pins and camlocks attached to said support plate and capable of being disposed in said tubes for completely suspending said suport plate from said tubes;
a central member attached to said support plate;
a first sleeve rotatably disposed around said central member;
a first arm attached to said sleeve;
a second arm rotatably attached to said first arm;
a third arm attached to said second arm and capable of rotating relative to said second arm with a probe holder attached to an end thereof;
a first drive mechanism removably attached to said first sleeve for rotating said first sleeve and said first arm in a horizontal plane;
a second drive mechanism removably attached to said first arm and to said second arm for rotating said second arm in a horizontal plane relative to said first arm; and
a third drive mechanism disposed in said third arm for rotating a portion of said third arm with respect to said first and second arms, the rotation of said first, second, and third arms being capable of positioning said probe holder and probe in colinear alignment with said tubes thereby allowing said probe to be introduced into said tube while said probe positioner is completely supported from said tubes by said support plate and camlocks.

4,302,147
LIGHTWEIGHT RADIAL FLOW FLUID MACHINE WITH FLUID BEARING SEALED FLEXIBLE BLADES
Justin L. Cherubim, Flint, Mich., assignor to General Motors Corporation, Detroit, Mich.
Filed Mar. 6, 1980, Ser. No. 127,727
Int. Cl.³ F01D *5/04*
U.S. Cl. 415—92 **3 Claims**

1. A fluid machine comprising
a rotor with a plurality of blades having flexible sides connected axially at one of the leading and trailing edges and open at the other, said blades being operatively attached to a central hub portion rotatable on an axis, the blade sides being free to flex outwardly of said attachment and open for fluid flow between the sides through radially inner and outer peripheries, and
a housing at least partially enclosing said rotor, said housing including axially spaced opposed stationary walls each closely adjacent one of the sides of each of said blades and means for passing fluid radially between and through the center and circumference of said housing for reaction with said blades,
said blades being shaped to coact with the working fluid and adjacent walls of the housing during rotor rotation to develop a fluid dynamic bearing film that supports the blade sides in free-running close clearance relation to said walls, thus effectively sealing the space between the blades and the walls with a minimum of wearing contact.

4,302,148
GAS TURBINE ENGINE HAVING A COOLED TURBINE
Henry Tubbs, Shirley near Brailsford, England, assignor to Rolls-Royce Limited, London, England
Filed Jan. 29, 1980, Ser. No. 116,655
Claims priority, application United Kingdom, Jan. 2, 1979, 03637/79
Int. Cl.³ F01D *5/18*
U.S. Cl. 415—115 **14 Claims**

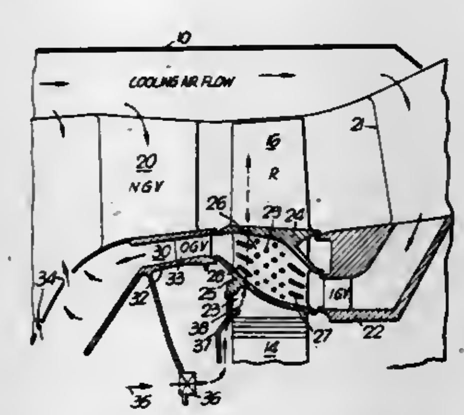

1. A gas turbine engine having a cooled turbine, a compressor wall having apertures therein for the flow of compressor bleed air from the main engine airflow, first duct means for directing the bleed air to flow to said turbine, the turbine comprising a rotor disc carrying a row of rotor blades each having a root portion, a shank portion and an aerofoil portion, said first duct means directing said bleed air between the shanks of adjacent blades to cool them, and second duct means for conveying the bleed air from the tubine rotor into the main gas flow of the engine upstream of the turbine rotor.

4,302,149
CERAMIC VANE DRIVE JOINT
Charles H. Smale, Indianapolis, Ind., assignor to General Motors Corporation, Detroit, Mich.
Filed Feb. 19, 1980, Ser. No. 122,475
Int. Cl.³ F01D *17/16*
U.S. Cl. 415—134 **1 Claim**

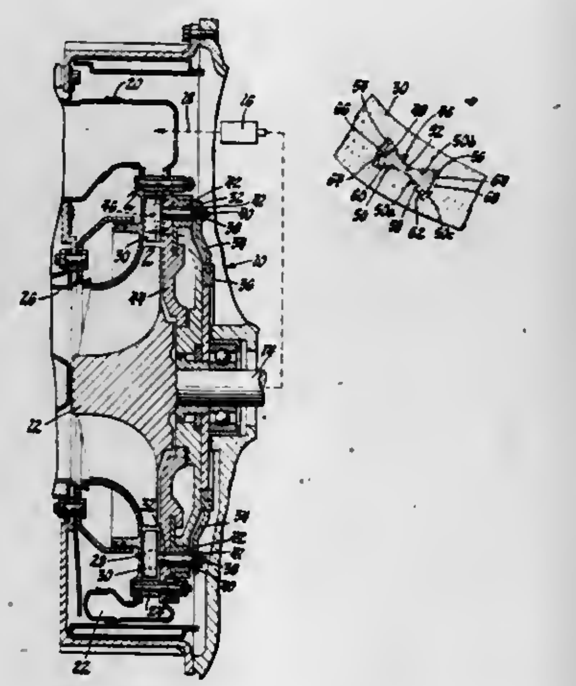

1. In a drive system for transfer of drive force from a turbine vane actuating ring to a ring of ceramic turbine vanes via plurality of turbine vane levers each coupled at one end to the ring and at an opposite end to a metal drive shaft, the improvement comprising: means for defining a bow tie configured vane end slot in each of said ceramic vanes, each of said slots having a wall with reduced width center segments and extended side surfaces diverging outwardly from said center segments to form tapered end slots, a cross head on each of said metal drive shafts with flared ends thereon fit in said end slots to engage said side surfaces for distributing a vane drive force across the extended side surfaces so as to attenuate drive force produced loads on said ceramic vane, said flared ends having a length less than that of said end slots to define clearance spaces to accommodate relative thermal growth between the metal of said drive shaft and the ceramic of said vane so as to prevent excessive stress in said vane during operation of the turbine at elevated temperature conditions.

4,302,150
CENTRIFUGAL COMPRESSOR WITH DIFFUSER
Kurt H. Wieland, Rolling Hills Estates, Calif., assignor to The Garrett Corporation, Los Angeles, Calif.
Filed May 11, 1979, Ser. No. 38,141
Int. Cl.³ F04D *29/44*
U.S. Cl. 415—207 **18 Claims**

3. In a centrifugal compressor having a centrifugal impeller rotatably carried within a compressor housing having an annular discharge chamber for receiving compressed fluid discharged radially outwardly from said impeller upon impeller rotation, a diffuser section comprising an annular unitary diffuser ring closely circumferentially surrounding said impeller between said impeller and the discharge chamber, said ring including an annular vaneless diffuser space in open communication with said impeller for receiving fluid discharged radially outwardly from the impeller, and a plurality of linearly extending, generally outwardly radiating diffuser channels of generally circular cross section for guiding fluid from the vaneless diffuser space to the discharge chamber, said diffuser channels being angularly oriented with respect to each other for intersection of their linear centerlines to form a tangency circle

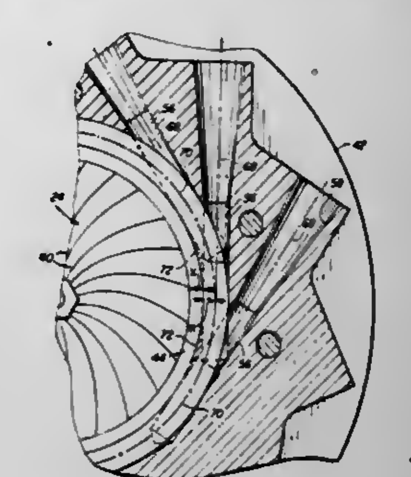

within said vaneless diffuser space and disposed radially outwardly from said impeller by a radial dimension greater than the radius of the diffuser channels.

4,302,151
DRAFT TUBE FOR A REACTION TURBINE
Pierre Piguet, Onex, and Andre Culaud, Geneva, both of Switzerland, assignors to Ateliers des Charmilles S.A., Geneva, Switzerland
Filed May 2, 1979, Ser. No. 35,405
Claims priority, application Switzerland, May 9, 1978, 5000/78
Int. Cl.³ F03B *11/00*
U.S. Cl. 415—209 **6 Claims**

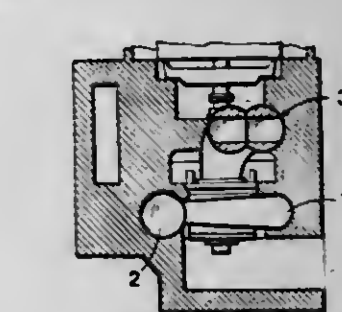

1. A draft tube for a reaction turbine, wherein the wall of the draft tube comprises gutters connected along their edges to at least one dividing plate forming a beam.

4,302,152
ANTI-MOMENT GYRO FOR WINDMILL
Ronald N. Jensen, 208 Greenwell Dr., Hampton, Va. 23660
Filed Jun. 25, 1979, Ser. No. 51,376
Int. Cl.³ F03D *7/02*
U.S. Cl. 416—18 **4 Claims**

1. In combination with a rotating member having at least two blades, the improvement therewith consisting of a rotatable gyro disposed along the length of each said blade and adapted for rotation about an axis 90 degrees in relation to the rotating axis of said rotating member, and means for rotating

said gyro on a shaft of the rotating member, whereby said gyro imposes a moment force on the said shaft due to the gyroscopic

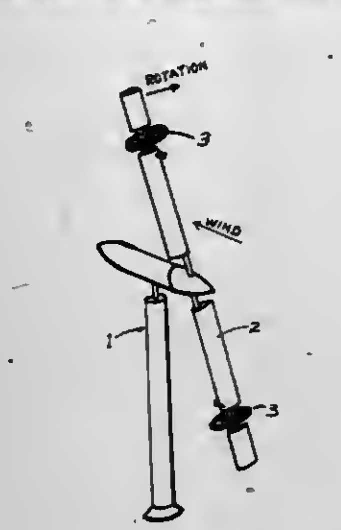

precession of the gyro as the rotating member turns and subsequently reduces the stresses in the rotating member.

4,302,153

ROTOR BLADE FOR A GAS TURBINE ENGINE

Henry Tubbs, Shirley, England, assignor to Rolls-Royce Limited, London, England

Filed Jan. 15, 1980, Ser. No. 112,808

Claims priority, application United Kingdom, Feb. 1, 1979, 3631/79

Int. Cl.³ F01D *5/08, 5/18*

U.S. Cl. 416—96 R **7 Claims**

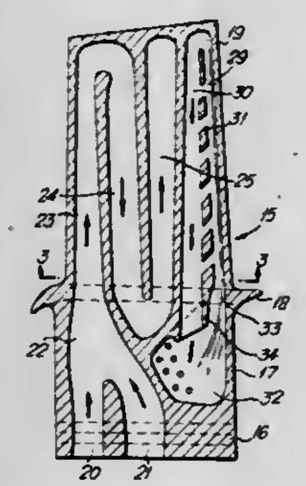

1. A rotor blade for a gas turbine engine comprising an aerofoil, a shank portion and a root adapted to engage with a rotor disc so as to support the aerofoil via the shank, and cooling means for the aerofoil comprising passages in the leading portion of the aerofoil, a cooling air entry aperture connected to the passages for the flow of cooling air therethrough, and a sealed cooling fluid circuit in the trailing portion of the aerofoil containing a quantity of cooling fluid and comprising a liquid feed passage closely adjacent to the trailing edge, and a vapour return passage forward of said liquid feed passage, wall portions extending between the flanks of the blade which at least partly divide said feed from said return passage, and a sealed cavity within the shank of the blade communicating with the feed and return passages and adapted to operate as a condenser of the vapour.

4,302,154

INTEGRATED TRANSMISSION AND ROTOR HEAD

John C. Mack, Glenn Mills, Pa., assignor to The Boeing Company, Seattle, Wash.

Filed Sep. 27, 1979, Ser. No. 79,270

Int. Cl.³ B64C *27/74*

U.S. Cl. 416—114 **1 Claim**

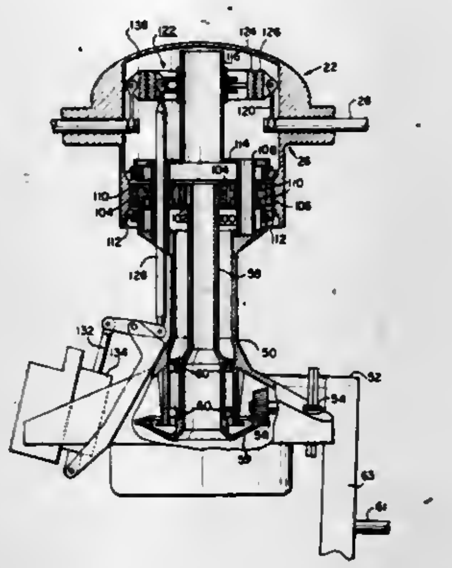

1. A rotorcraft hub and transmission system, adapted to be driven by an engine which comprises:

a non-rotatable housing connected to the rotorcraft;

a rotor shaft having an upper end and a lower end for transmitting torque, said shaft being positioned within said housing;

a bevel gear connected to the engine and connected to said lower end of said shaft adapted to cause rotation of said shaft, said shaft and said bevel gear interface being adapted to cause a first stage of gear reduction,

a planet gear assembly including a ring gear, planet gears adapted to engage said ring gear, and a sun gear adapted to engage said upper end of said drive shaft and said planet gears, each of said planet gears being rotatably connected to a post, said posts forming a portion of said housing to prevent them from orbiting about said sun gear, said planet gear assembly being adapted to cause a second stage of gear reduction;

a rotatable hub including rotor blades operably connected thereto, said blades being rotatable about a pitch axis, said ring gear forming an integral portion of said hub, and said hub being rotatably connected to said housing by bearing means which transmit axial loads and bending moments between said hub and said housing; and

control means connected to a non-rotating portion of the rotorcraft and to said rotor blades for causing rotation of said blades about their pitch axis, said control means including control rods passing through said planet gears and said posts, and further including a swashplate positioned above the plane of rotation of said blades, said swashplate including a non-rotating portion tiltably and slidably connected to a stand pipe forming a portion of said housing, said stand pipe being connected to said posts, said swashplate further including a rotating portion connected to said blades so as to permit said swashplate to cause rotation of said blades about said pitch axis, said control rods being connected to said non-rotating portion of said swashplate; whereby the length of said rotor shaft may be minimized thereby permitting the height of the rotor above the rotorcraft to be minimized.

4,302,155

AIR CRAFT PROPELLER ASSEMBLY WITH COMPOSITE BLADES

Richard V. Grimes; W. Benjamin Harlamert, both of Piqua, Ohio, and David F. Thompson, Chester, Pa., assignors to Hartzell Propeller, Inc., Piqua, Ohio

Filed Jan. 8, 1979, Ser. No. 1,961

Int. Cl.³ B64C *11/06, 11/26*

U.S. Cl. 416—144 **9 Claims**

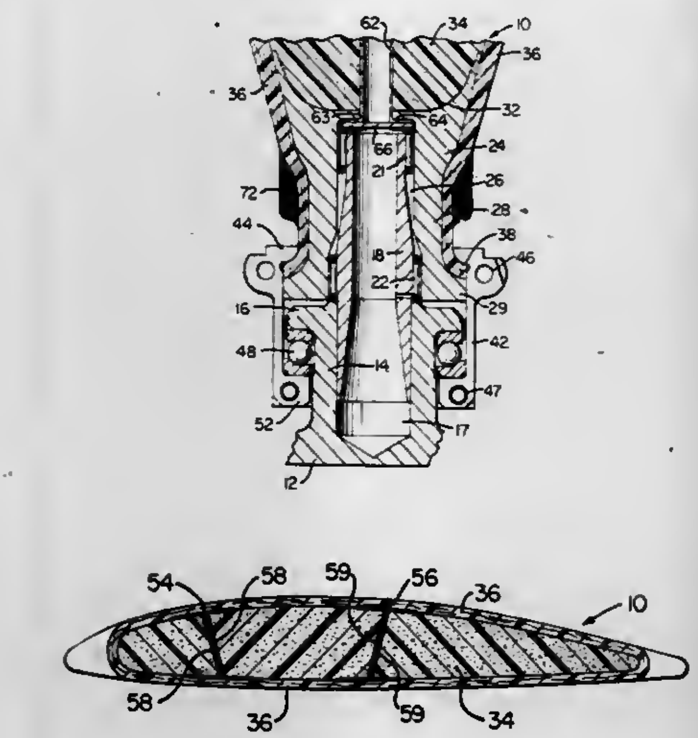

1. An aircraft propeller assembly comprising a rotatable propeller hub supporting a plurality of radially extending composite propeller blades, each of the composite blades including an elongated core of substantially rigid plastics material, a skin of plastic resin impregnated material surrounding the core, a rigid base member supporting the core and having an outwardly projecting inner circular flange portion integrally connected to a neck portion of reduced outside diameter, the skin material continuing radially inwardly along the neck portion and flange portion of the base member in overlying relation and having a flange portion projecting outwardly adjacent the flange portion of the base member, means surrounding the skin material overlying the neck portion of the base member and rigidly securing the skin material to the base member, means connected to the propeller hub and including a retention lip portion substantially surrounding the base member radially outwardly of the flange portion of the skin material, at least one longitudinally extending slot within the core, said slot being disposed at an acute angle relative to the chord of the blade, at least one strip of plastic resin impregnated material extending longitudinally within the slot, and the strip having longitudinally edge portions underlying and bonded to the skin material forming opposite sides of the blade.

5. An aircraft propeller assembly comprising a rotatable propeller hub supporting a plurality of radially extending composite propeller blades, each of said composite blades including an elongated core of substantially rigid material, a skin of plastic resin impregnated material surrounding said core, a rigid base member supporting said core and having an outwardly projecting inner flange portion integrally connected to a neck portion of reduced outside diameter, means defining a bore within said base member, means connected to said propeller hub and supporting a bearing within said bore to provide for rotating said blade relative to said hub, said skin material on said blade continuing radially inwardly along said neck portion of said base member in overlying relation and having a skin flange portion projecting laterally outwardly adjacent said flange portion of said base member, a plastic impregnated element extending around said skin material surrounding said neck portion and spaced radially outwardly from said skin flange portion for forming a first rigid connection of said skin material to said base member, means connected to said propeller hub and including an inwardly projecting retention lip portion substantially surrounding said base member, and said lip portion being disposed radially between said skin flange portion and said plastic impregnated element extending around said skin material for forming a second rigid connection of said skin material to said base member.

4,302,156

ELECTRO-VISCOUS FAN CLUTCH ASSEMBLY

Frank E. LaFlame, Dayton, Ohio, assignor to General Motors Corporation, Detroit, Mich.

Filed Nov. 16, 1979, Ser. No. 94,809

Int. Cl.³ F01D *7/08;* **F16D** *29/00*

U.S. Cl. 416—169 A **3 Claims**

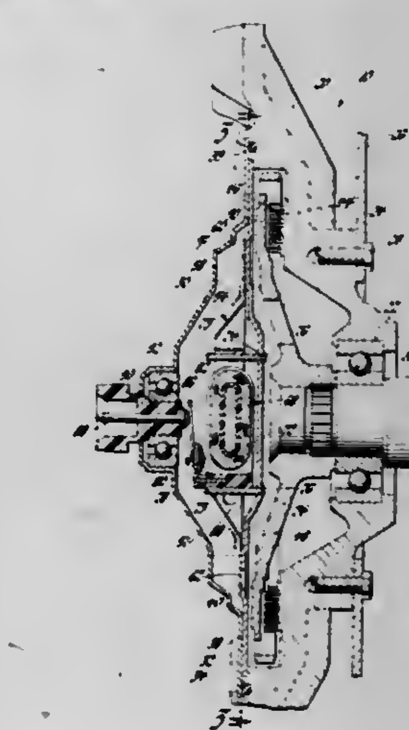

1. A bladed fan and clutch assembly for inducing a flow of cooling air through a radiator in which engine coolant is circulated comprising a shaft member adapted to be rotatably driven, first fluid clutch means operatively connected to said shaft member for rotation therewith, second fluid clutch means axially spaced from said first fluid clutch means to form a fluid shear space therebetween for receiving a fluid so that said second fluid clutch means can be rotatably driven by said first fluid clutch means when said first clutch means is driven and a supply of fluid is fed into said shear space, fan blade means secured to said second clutch means and extending radially outwardly therefrom, a cover plate attached to said second clutch means to form a fluid reservoir therein, a quantity of fluid stored in said reservoir, a pump plate having pumping means to pump fluid from said shear space to said reservoir, said reservoir being hydraulically separated from said clutch means by said pump plate, valve means to control the flow of fluid between said reservoir and said shear space, said valve means comprising a gate in said pump plate forming a hydraulic fluid passage between said reservoir and said shear space and a spring arm mounted for sliding movement on said clutch plate between predetermined positions for opening and closing said gate and electromagnetic means mounted directly on said pump plate adjacent to said spring arm for rotation with said pump plate, said electromagnet means being electrically energizable for slidably moving said spring arm to one of said positions to control the supply of fluid into said shear space from said reservoir and thereby control the viscous drive of said second clutch means by said first clutch means and the drive of said fan blades.

4,302,157
HIGH FLUID LEVEL PUMP OFF CONTROLLER AND PROCESS
Barry S. Welton, and G. Wayne Westerman, both of Midland, Tex., assignors to End Devices, Inc., Midland, Tex.
Filed Feb. 5, 1979, Ser. No. 9,238
Int. Cl.³ F04B *49/02*
U.S. Cl. 417—12 **8 Claims**

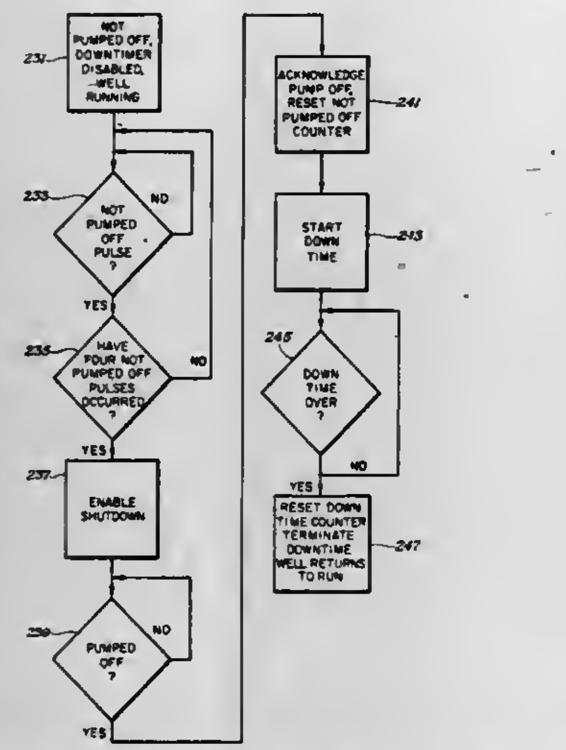

8. A system for controlling the pump of a well employed for pumping fluid from a borehole to the surface, comprising:
control means for controlling the operation of said pump, said control means being of the type that must be enabled before it can shut down said pump,
signal producing means for producing a signal having a first characteristic if the work performed by said pump is above a given value and a second characteristic if the work performed by said pump is below said given value,
means for enabling said control means to place said control means in a condition capable of shutting down said pump only after said signal takes on said first characteristic, and
means for applying a control signal to said control means for shutting said pump down after said control means has been enabled and if said signal takes on said second characteristic.

4,302,158
AUTOMATIC PUMP FOR DEEP WELLS
Kenard D. Brown, 3451 Terrace Knoll Ct., Reno, Nev. 89512
Continuation-in-part of Ser. No. 651,512, Jan. 22, 1976, Pat. No. 4,120,612. This application Oct. 16, 1978, Ser. No. 951,785
Int. Cl.³ F04B *49/04, 21/00*
U.S. Cl. 417—20 **10 Claims**

1. A deep well pump assembly including an upwardly extending cylinder having a free piston therein and an outlet conduit for the discharge of fluid therefrom, means for admitting reservoir liquid from a well to said cylinder above said piston, a hydraulic fluid supply and means including a motor driven hydraulic pump within said assembly having an inlet and an outlet and connected for forcing hydraulic fluid from said supply to said cylinder below said piston to drive the piston upwardly and discharge reservoir liquid from said cylinder through said conduit, a check valve for preventing the return of discharged liquid to said cylinder, control means dependent upon the accumulation of a predetermined quantity of liquid in said cylinder for initiating operation of said hydraulic pump to effect the forward stroke of said piston, said piston returning to its initial position upon completion of its forward stroke, and repeating said forward stroke upon each accumulation of said predetermined quantity of liquid;
a cylindrical housing having an internal diameter greater than the diameter of said cylinder and enclosing said cylinder while leaving substantial space between said housing and said cylinder about the fluid connection to said cylinder and about at least a portion of said cylinder,
said motor and hydraulic pump being connected in driving relationship and including casings forming a unit of elongated generally cylindrical configuration, said hydraulic pump constituting a bottom closure for said housing,

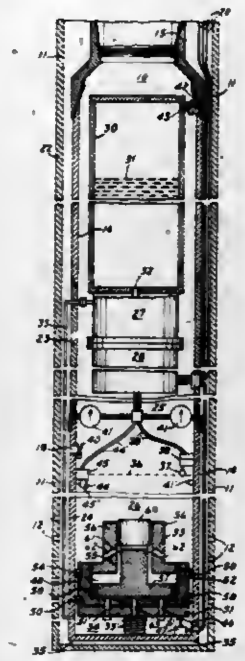

said space about said cylinder and the connections thereto constituting a reservoir for hydraulic fluid and said pump inlet being in open communication with said space, and
said reservoir fluid admitting means including an opening in said housing and a check valve mounted in said cylinder adjacent said opening and means for sealing said cylinder and said housing about said opening for preventing leakage of hydraulic fluid from said reservoir.

4,302,159
AMBIENT AIR TIMING DEVICE
William L. Barry, Houston, Tex., assignor to Vapor Corporation, Chicago, Ill.
Filed Aug. 22, 1979, Ser. No. 68,728
Int. Cl.³ F04B *49/00*
U.S. Cl. 417—46 **8 Claims**

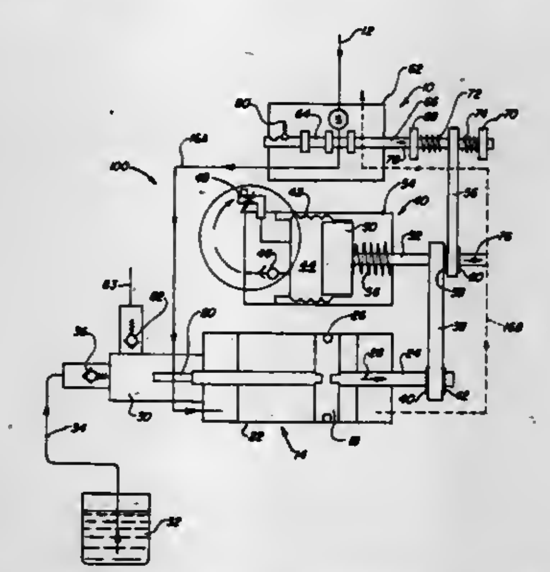

1. A delay mechanism for developing a cyclic action followed by a predetermined delay in a pump or the like comprising
an enclosed chamber including a movable wall for varying the volume of said chamber,
variable flow rate means to allow variable flow of fluid into and out of said chamber,
coupling means for coupling said wall to said pump, to allow said pump to move said wall to a first position,
biasing means for biasing said wall to a second position,
said coupling means includes an arm slideably secured to said wall and fixed to said pump to allow at least partial operation of said pump without movement of said wall; and
a directional control valve for directing supply fluid to said pump for actuation thereof and a second arm fixed to said wall and slideably secured to said control valve to control the actuation thereof in response to movement of said wall wherein the control valve action is not immediate.

4,302,160
SILENTLY OPERATING FLUID PUMP UNIT
Rudolf Hofmann, Jr., c/o Sullair Europe Corporation, 2 Wallensteinstrasse 20, D-8192 Geretsried, Fed. Rep. of Germany
Filed Aug. 1, 1979, Ser. No. 62,891
Int. Cl.³ F04B *39/00*
U.S. Cl. 417—313 **12 Claims**

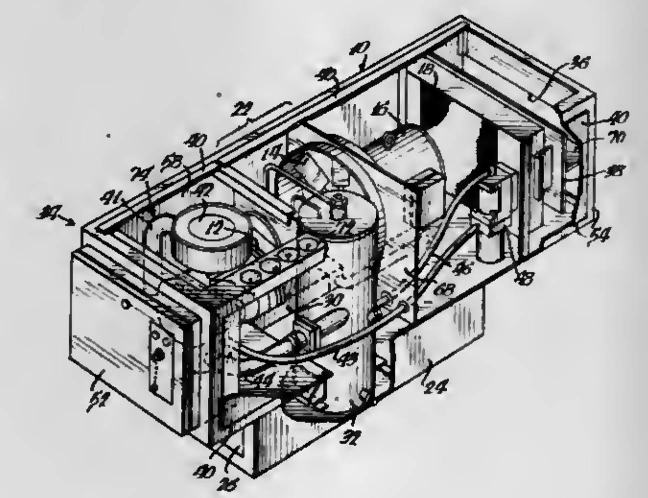

1. A fluid pump unit having a hollow housing, at least one inlet and at least one outlet connecting the exterior of said housing to the hollow interior thereof, a pump and drive means to operate the pump both of which are disposed within the housing, comprising:
an oil separator coupled to said pump;
an aftercooler coupled to said oil separator;
an open ended air shaft for directing air to said inlet; and
a fan located approximately at the midpoint of the air flow route for moving air through said housing from said inlet through said housing from said inlet to said outlet;
said oil separator and said aftercooler being located in said housing between said air shaft and said fan so as to limit the amount of noise transmitted to the exterior of the housing.

4,302,161
WAVE PUMP APPARATUS
John L. Berg, c/o Jeannine Barriault, 1530 Lafayette St., Longueuil, Quebec, Canada (J4K 3B7)
Filed Oct. 1, 1979, Ser. No. 81,013
Int. Cl.³ F03B *13/12*
U.S. Cl. 417—333 **1 Claim**

1. A wave pump apparatus comprising a frame of the submersible type, floats mounted on the frame and adapted to float the frame, the floats including at least a pair thereof which are spaced apart one from the other a distance approximating the average wave length of a particular wave pattern, the floats being adapted to be moved relative to each other depending on the wave length of a wave pattern on the body of water, a plurality of wave pumps provided on the frame, each wave pump including a cylinder, a piston movable in the cylinder, a float on the exterior of the cylinder directly connected to the piston, chamber means communicating with a bottom of the cylinder including a one-way valve provided at an inlet into the chamber allowing water to be drawn into the chamber as the piston is moved upwardly in the cylinder, a second one-way valve provided at an outlet of the chamber to allow water to flow through the outlet when the piston is moved downwardly in the cylinder, the plurality of water pumps being

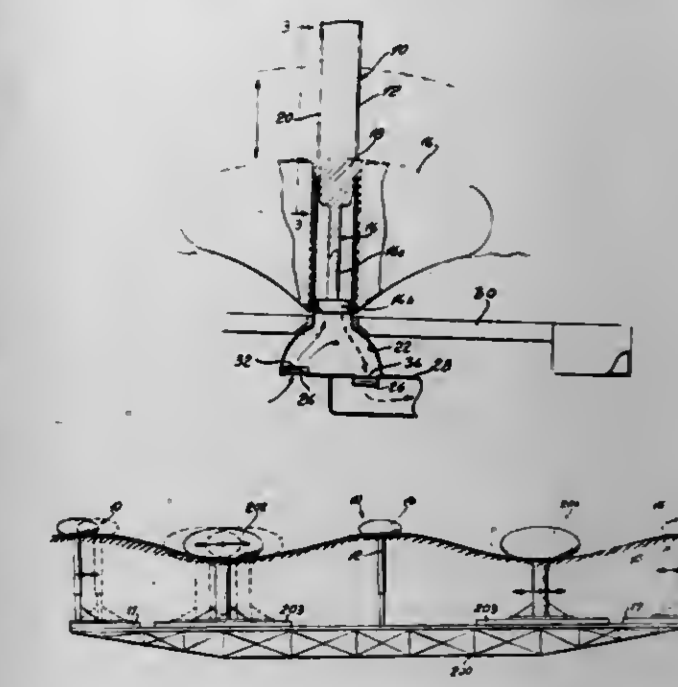

spced approximately one half wave length from the floats on the frame such that the floating portion of the wave pump is at the crest of a wave when the floats are in the respective valleys of waves and vice versa.

4,302,162
WATER PUMPING DEVICE
Jefferson J. Springston, Pasadena, Md., assignor to Lipman Electric Company, Inc., Owings Mills, Md.
Continuation of Ser. No. 944,978, Sep. 22, 1978, Pat. No. 4,247,261. This application Oct. 15, 1980, Ser. No. 197,064
The portion of the term of this patent subsequent to Jan. 27, 1998, has been disclaimed.
Int. Cl.³ F04B *17/06*
U.S. Cl. 417—424 **4 Claims**

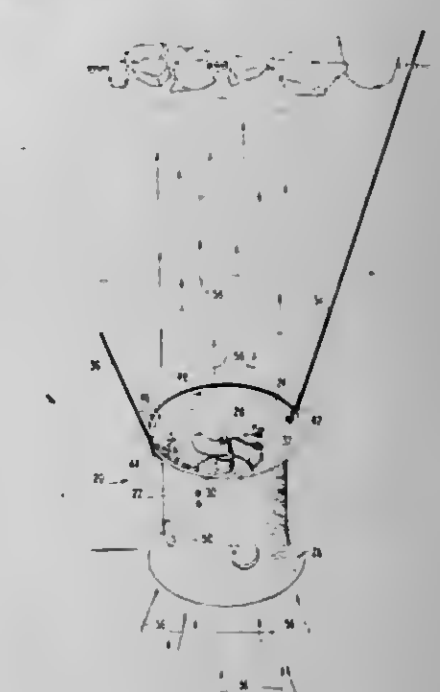

1. A device adapted to be submerged in a body of water or to rest on the bottom thereof for protecting boats and docks from ice by generating a column of water from the lower depths of said body of water and directing said column upwardly to the surface thereof which may be suspended from the boat or dock to be protected comprising:

a hollow, elongated, circular in cross section housing the upper portion thereof forming an upwardly directed outlet opening for expelling and directing a column of water upwardly, said opening being contained in a plane disposed normal to the longitudinal axis of said housing, and inlet means carried by said housing in the lower portion thereof for admitting water to the interior thereof;

adjustable suspension means for selectively suspending said housing, submerged, in the body of water whereby the longitudinal axis thereof is disposed at a predetermined angle to the vertical with the outlet directed upwardly; said means comprising a pair of suspension lines; connecting means carried by said device for connecting an end of each of said lines to the upper portion of said housing adjacent the outlet in a mutually spaced relationship at the periphery of the outlet whereby the opposite end of each line may be secured to a boat or dock to suspend said housing in a predetermined position in the body of water;

means mounted within the housing between the inlet means and the outlet for drawing water into the housing and for expelling water in a column through the outlet comprising an electric motor and means for selectively coupling said motor to a source of electrical energy and a propeller coupled to and driven by said motor whereby rotation of said propeller will draw water into said housing and expell the water from the housing through the outlet.

4,302,163
ADJUSTABLE OUTPUT PUMP FOR LIQUIDS
Henry F. Hope, and Stephen F. Hope, both of 2421 Wyandotte Rd., Willow Grove, Pa. 19090
Filed Oct. 30, 1979, Ser. No. 89,521
Int. Cl.³ F04B *43/08;* F01B *19/04;* F04B *49/00*
U.S. Cl. 417—473 14 Claims

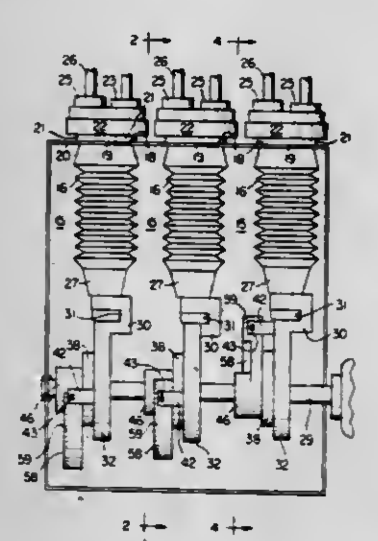

1. An adjustable stroke liquid pump comprising
a pump having expansible chamber means with liquid inlet and delivery valves, and
variable stroke means for varying the delivery of liquid from said expansible chamber means,
said variable stroke means comprising
a rotatable drive shaft,
a connecting member actuating said expansible chamber means and having a central axial opening,
an eccentric cam member disposed in said opening and an adjustment plate member on said shaft in facing relation to said cam member,
said cam member and said plate member being relatively rotatable for adjusting of the stroke,
said adjustment plate member being secured to said shaft,
said cam member being rotatably mounted in said opening and with respect to said connecting member and having an arcuate slot for movement of said cam member with respect to said shaft for stroke variation, and
means for locking said cam member and said plate member in a selected position of adjustment.

4,302,164
PERISTALTIC PUMP WITH MEANS COMPRESSING ITS TUBE IN TWO DIRECTIONS
Paul Manella, Dübendorf, Switzerland, assignor to Doltron AG, Uster, Switzerland
Filed Oct. 15, 1979, Ser. No. 84,654
Claims priority, application Switzerland, Nov. 29, 1978, 12227/78
Int. Cl.³ F04B *43/12, 45/08*
U.S. Cl. 417—474 4 Claims

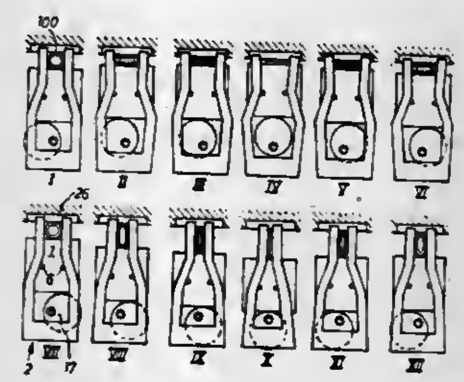

1. A hose pump for conveying a fluid medium through a hose comprising a plurality of movable pressure elements consisting of a first set of pressure members and a second set of pressure members, a common drive means for activating said first and second sets of pressure members in order to progressively change the cross-sectional are of the hose along its length successively in two directions situated transversely with respect to one another, and means defining a counter pressure surface and said first pressure members are movable to-and-fro with respect to the counter pressure surface, wherein: each first pressure member is a plate of substantially rectangular shape, two pins are provided at a side of each said plate which bear against an adjacent second pressure member, each said second pressure member comprising a bifurcated part having a yoke and two legs, the free end portions of which define two elements movable to-and-fro with respect to the hose, each of the legs having an intermediate portion directed towards one another and said pins being against inner surfaces of said intermediate portions in order to continuously alter the spacing between free end of said legs.

4,302,165
INTERENGAGING SCREW MACHINE WITH RADIAL INLET AND/OR OUTLET BORE
Arne Lönnebring, Älvsjö, Sweden, assignor to Imo-Industri AB, Sweden
Filed Aug. 6, 1979, Ser. No. 63,712
Claims priority, application Sweden, Aug. 22, 1978, 7808861
Int. Cl.³ F03C *2/08;* F04C *2/16*
U.S. Cl. 418—197 2 Claims

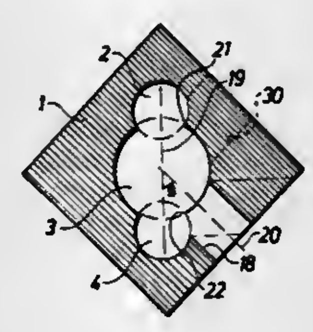

1. A hydraulic screw machine including:
a screw array in the form of a driving screw and at least one running screw coacting therewith;
a housing enclosing said screw array provided with inlet and outlet openings, said housing defining a cavity with said screws mounted in said cavity to seal against each other such that in every position of the screw array there is at least one complete seal between said inlet and outlet openings at the ends of the screw array;
one of said inlet and outlet openings being disposed at one end of said screw array and being provided by a bore extending radially from said cavity through said housing, said bore being circular in cross section with the axis of said bore forming an angle of less than 90 degrees with a plane containing the axes of said screws whereby said one opening can be disposed nearer to the other of said openings while retaining said at least one complete seal between said openings such that said housing and the overall screw machine can be shortened.

4,302,166
DROPLET FORMING APPARATUS FOR USE IN PRODUCING UNIFORM PARTICLES
Mack J. Fulwyler, and C. William Hatcher, both of Los Alamos, N. Mex., assignors to Coulter Electronics, Inc., Hialeah, Fla. Division of Ser. No. 679,241, Apr. 22, 1976, Pat. No. 4,162,282. This application Mar. 15, 1979, Ser. No. 20,818
Int. Cl.³ B01J *2/02*
U.S. Cl. 425—6 5 Claims

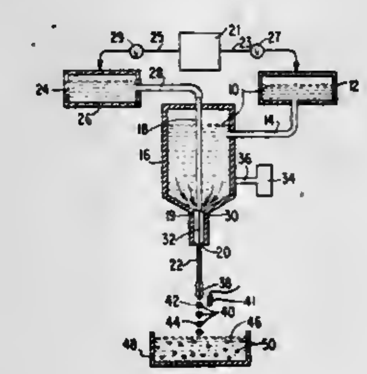

1. A droplet forming apparatus for producing uniformly sized solid particles from dispersed material in at least one of a core and sheath liquids which are immiscible with each other and supplied to the apparatus from a source of said liquids, said apparatus comprising:
means for connecting the source of core liquid to the apparatus;
means for connecting the source of sheath liquid to the apparatus;
means for forming a moving body of at least one sheath liquid for laminar movement through the apparatus;
means for introducing said core liquid as a laminar stream into said moving body at a selected location along the path of movement of the moving body through the apparatus;
means for producing a liquid jet from said moving body after said introduction of said core liquid;
disturbance means for periodically disturbing said liquid jet to separate said liquid jet including said core and said sheath liquids into unconnected uniform droplets containing a uniform amount of said disbursed material, said core liquid and said sheath liquid; and
means to collect said formed droplets in a catch liquid in which said sheath liquid and said core liquid are each soluble, whereby said sheath liquid and said core liquid are dissolved therein to render the material dispersed in said core liquid into said uniformly sized solid particles.

4,302,167
APPARATUS FOR CURING POWER TRANSMISSION BELTS
Flavio Maffeis, and Fulvio Franchino, both of Milan, Italy, assignors to Industrie Pirelli S.p.A., Milan, Italy
Filed Feb. 8, 1979, Ser. No. 10,491
Int. Cl.³ B29H *7/22;* B29D *29/00*
U.S. Cl. 425—28 B 6 Claims

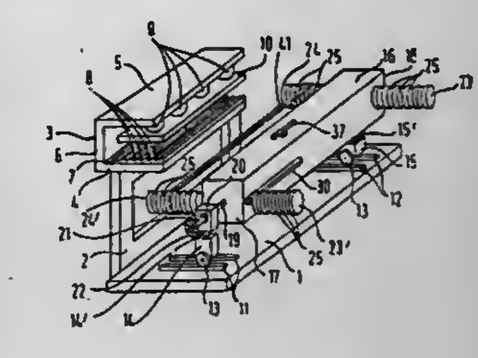

1. A device for curing power transmission belts comprising a pair of flat heated plates provided with at least one groove having in its cross-section the form of the cross-section of the belt, means for moving one of said plates against the other and for drawing the plates apart from each other, and means for moving at intervals said belts between the said flat plates comprising means for supporting and keeping said belt under tension during the curing phase and during the cooling of the cured belt outside of the said plates and for protecting said cured belt from the thermal radiations emitted by the said flat heated plates.

4,302,168
HIGH PRESSURE PRODUCING APPARATUS
Lev G. Khvostantsev, mikroraion "V", 7, kv. 20, Troitsk Moskovskoi oblasti, U.S.S.R.
PCT No. PCT/SU79/00114, § 371 Date Jul. 29, 1980, § 102(e) Date Jul. 25, 1980, PCT Pub. No. WO80/01143, PCT Pub. Date Jun. 12, 1980
PCT Filed Nov. 19, 1979, Ser. No. 198,102
Claims priority, application U.S.S.R., Nov. 29, 1978, 2715511
Int. Cl.³ B30B *11/32*
U.S. Cl. 425—77 8 Claims

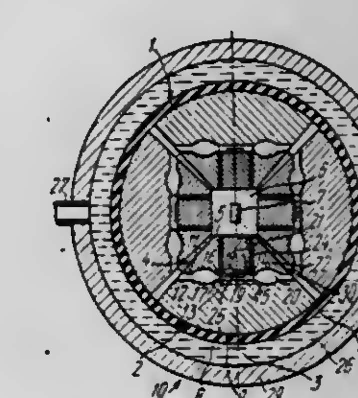

1. An apparatus for producing high pressure comprising a multi-die system wherein each die is made up of two cooperating parts arranged along the longitudinal centerline thereof, one part being a working body with one end thereof adjoining a solid medium plastic under pressure adapted to enclose a test sample subjected to a pressure transmitted by the solid medium thereto upon the dies being driven towards each other, the other part being a base member with one end thereof facing a die driving means common to all the dies and with the other end thereof facing another end of the working body and spaced a certain distance therefrom, the space between said ends being filled with a solid medium plastic under pressure, the surfaces or faces of said last-mentioned ends having identi-

cal annular grooves, the axes thereof essentially coinciding with the longitudinal centerline of the die, the inner edges of said grooves defining central portions of the working body and the base member ends respectively, the grooves being at least partially filled with a solid medium plastic under pressure, characterized in that the working body (4) of each die (2) is made up of two parts in the direction essentially perpendicular to the longitudinal centerline (3) of the die (2), the parts being a central insert (21) and an encircling ring (22) both arranged coaxially and capable of relative displacement towards the test sample (7), whereas the surface area of the end (23) of the central insert (21) adjoining the end (11) of the working body (4) is provided with the groove (14) approximates to or less than the surface area of the central portion (18) of said end (11).

4,302,169
METHOD AND MOLD FOR MAKING PLASTIC SHOES
Jose F. deOliveria, Salem, N.H., assignor to Bartex Industries Corp., Waltham, Mass.
Filed Jul. 29, 1980, Ser. No. 173,289
Int. Cl.³ B29C *6/00, 7/00;* B29D *27/00;* B29F *3/00*
U.S. Cl. 425—119 **6 Claims**

1. In a molding apparatus for forming plastic shoes, the combination comprising
a mold having first and second separable engaged segments defining therein a wholly-enclosed mold cavity,
a shoe last,
last-supporting means arranged to support said last within said mold cavity, and
pivot means pivotally supporting said last-supporting means.

4,302,170
ACCUMULATOR HEAD HAVING A PISTON WITH A SELF-WIPING FACE
John Goron, Bridgewater, N.J., assignor to Midland-Ross Corporation, Cleveland, Ohio
Filed Jul. 18, 1980, Ser. No. 170,051
Int. Cl.³ B29D *23/04*
U.S. Cl. 425—133.1 **9 Claims**

1. An accumulator head, comprising:
(a) an annular, accumulation chamber having a longitudinal axis and a pair of opposing ends, one of which is a configured end through which, for example, resinous material leaves the chamber;
(b) an annular ring-piston movable axially within the annular accumulation chamber to force resinous material from the accumulation chamber through the discharge end thereof, the piston having a free outer tip which is shaped to correspond generally to the configuration of the discharge end;
(c) an inlet passageway communicating with the accumulation chamber between opposing ends of the chamber, the inlet passageway extending radially outwardly from the chamber in a direction away from the longitudinal axis of the chamber;
(d) means coacting with the inlet passageway for forcing resinous material through the inlet passageway into the accumulation chamber; and
(e) means coacting with the ring-piston for causing the flow of resinous material into the accumulation chamber to wipe the tip of the piston to clean the tip and prevent accumulation of material thereagainst, the means coacting with the ring-piston including an annular groove that is recessed inwardly in the outer circumferential surface of the ring-piston adjacent the tip thereof in substantial alignment with the inlet passageway when the ring-piston is fully extended into the chamber, the groove, opposite the inlet passageway, having a recess extending therefrom longitudinally of the piston through the tip thereof.

9. An accumulator head, comprising:
(a) a centrally disposed mandrel;
(b) an annular accumulation chamber surrounding the mandrel and having a pair of opposing ends, one of which is a configured discharge end and with an annnlar discharge opening therein;
(c) an annular ring-piston reciprocable axially in the chamber to force, for example, resinous material in the accumulation chamber through the discharge opening, the ring-piston including:
(I) a free outer tip for engaging and forcing resinous material from the chamber, the tip having a shape which corresponds to the configuration of the discharge end of the chamber;

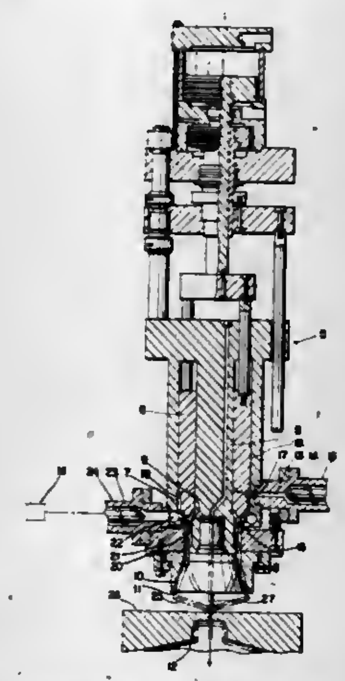

(II) an inner cylindrical wall closest the mandrel and an outer cylindrical wall in spaced relation from the inner wall;
(III) a circumferential groove recessed inwardly in the outer wall of the ring-piston in the direction of the mandrel and in spaced relation from the tip;
(IV) a recess in the outer wall of the ring-piston and extending longitudinally of the ring-piston between the groove and tip to form a conduit between the groove and chamber;
(d) an inlet passageway leading radially from the accmulation chamber between the opposing ends thereof in a direction away from the mandrel, the inlet passageway being aligned with a spot on the ring-piston that is substantially 180° from the recess measured around the ring-piston;
(e) means coacting with the inlet passageway for forcing resinous material into the accumulation chamber, at least a portion of the resinous material flowing in the groove and outwardly therefrom past the tip of the ring-piston to wipe and clean the tip;
(f) an annular discharge orifice in spaced relation from the discharge opening in the discharge end of the chamber;
(g) an annular discharge passageway connecting the discharge orifices and discharge opening;

(h) an annular entrance opening surrounding the discharge passageway and communicating therewith between the discharge orifice and discharge opening; and
(i) means for forcing resinous material through the entrance opening into the discharge passageway to form an outer layer of material to that flowing in the discharge passageway past the entrance opening.

4,302,171
LEVEL CONTROL FOR CERAMIC SLURRY WORKING TANK IN CERAMIC HOT MOLDING MACHINE
Michael I. Peltsman, and Israel D. Peltsman, both of 1646 Hampshire Ave. South, St. Louis Park, Minn. 55426
Filed May 14, 1979, Ser. No. 38,919
Int. Cl.³ B28B *00/00*
U.S. Cl. 425—140 **9 Claims**

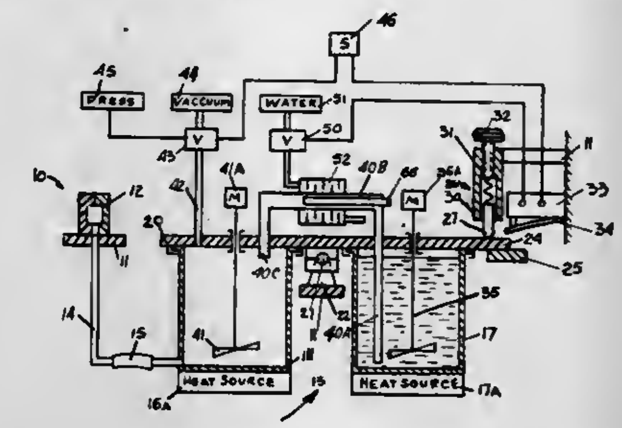

1. In a ceramic slurry hot molding machine having a working tank and a preparation tank for holding the slurry, and wherein transfer of material from said preparation tank to said working tank is required in the process, the improvement comprising an apparatus for determining when a desired amount of slurry has been transferred to said working tank, including a tank support for mounting said working tank, means to pivotally mount said tank support for pivotal movement from a first stopped position to a second position, means to counterbalance said working tank about its pivot to retain the tank support in said first stopped position until the material in said working tank reaches a desired level, and means to sense movement of said tank support to said second position.

4,302,172
EXTRUSION DIE ASSEMBLY
Steven W. Hogseth; Carl W. Loff, and Dean J. White, all of Chippewa Falls, Wis., assignors to Leesona Corporation, Warwick, R.I.
Filed May 15, 1980, Ser. No. 150,234
Int. Cl.³ B29F *3/00*
U.S. Cl. 425—154 **7 Claims**

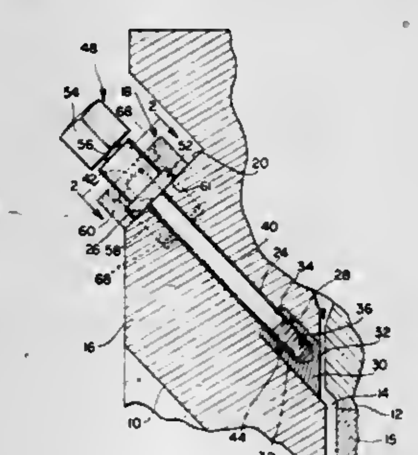

1. An extrusion die for the extrusion of thermoplastic materials having a die body defining an internal plastic flow channel and an elongated restrictor bar mounted generally transversely of said channel, said bar including a plurality of elongated studs fixedly connected at one end thereof to said bar at spaced longitudinal positions therealong, said studs extending from said bar through said die body to a position where the other ends thereof are positioned outwardly of said body, said other stud ends being threaded; the improvement comprising an assembly for non-rotatably, axially moving said studs relative to said die body so as to alternatively move said bar back and forth with respect to said flow path so as to regulate the flow of material therethrough, said assembly including an elongated recess disposed in the outer surface of said body and through which said other stud ends are adapted to extend, a plurality of spools each adapted for engagement with one of said other stud ends, each of said spools including a body portion in turn provided with a threaded axial bore engaged with said threaded other stud ends, means for axially restraining said spools with respect to said die body while permitting rotation thereof so as to in turn effect said axial movement of said studs, each of said spools including means breakable upon rotational overstressing thereof so as to prevent further application of force to its respective stud.

4,302,173
MOULDING MACHINE
Bertil Persson, Kerstis Vag 12, Hjarup 222 48 Lund, Sweden
Filed Feb. 28, 1979, Ser. No. 15,971
Claims priority, application Sweden, Mar. 1, 1978, 7802304
Int. Cl.³ A21C *5/00*
U.S. Cl. 425—192 R **7 Claims**

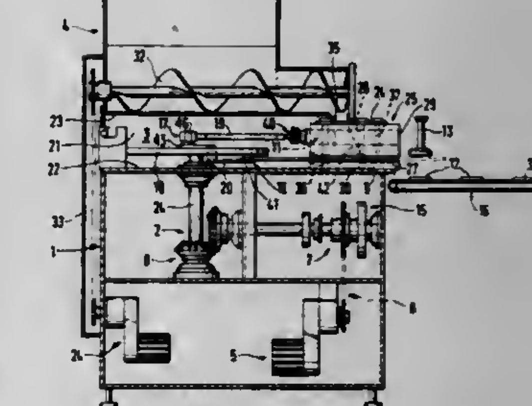

1. A moulding machine for moulding mouldable products, preferably foodstuff masses in the form of meat masses, fish masses or potato masses, comprising
means for defining a piston passage and a moulding tool passage communicating with said piston passage;
a piston slidably disposed in said piston passage;
a moulding tool defining a moulding cavity, said moulding tool slidably disposed in said moulding tool passage;
a generally vertical drive shaft;
means for rotatably driving said drive shaft;
a rotary disc mounted on one end of said drive shaft for rotation therewith about an axis;
means for coupling said moulding tool to said rotary disc to effect reciprocation of said moulding tool in said moulding tool passage with rotation of said rotary disc; and
means for coupling said piston eccentrically to said rotary disk to effect reciprocation of said piston in said piston passage with rotation of said rotary disc, comprising
cam means releasably mounted on said rotary disc,
a bearing eccentrically arranged on said cam means relative to said axis, and
a member pivotally connecting said piston and said bearing,
said cam means when released being swingable relative to said rotary disc to change the eccentricity of said bearing relative to said axis,
wherein said piston and said moulding tool are coupled to

said rotary disc such that when said moulding tool is in a first position said piston pumps the mouldable product into said moulding cavity, compacting the product to a desired consistency, and when said moulding tool is in a second position the mouldable product compacted in said moulding cavity is discharged from the machine.

4,302,174
ARRANGEMENT FOR CLOSING THE BARRELS OF TAMPON INSERTERS
Alfred Hinzmann, Richmond, Va., assignor to Hauni-Richmond, Inc., Richmond, Va.
Filed Nov. 13, 1979, Ser. No. 93,119
Int. Cl.³ B29D *31/00*
U.S. Cl. 425—341 **10 Claims**

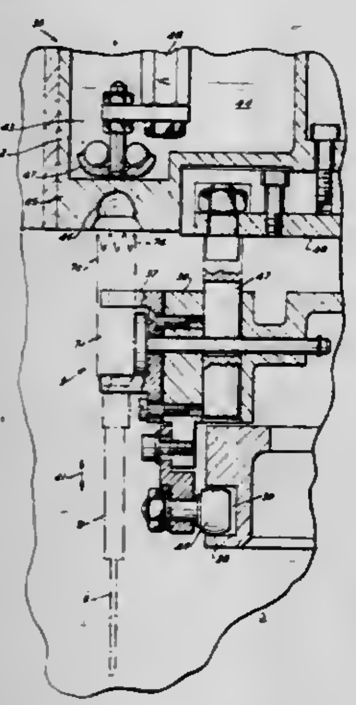

1. An arrangement for closing the barrels of catamenial tampon inserters, comprising means for advancing a succession of barrels in a predetermined direction, at a predetermined speed and along a predetermined path, including a carrier having a plurality of equidistant treating locations and means for releasably holding the barrels at said locations; means for supplying barrels to said locations in a first portion of said path; and means for simultaneously changing the temperature of and deforming a selected portion of each of the barrels during advancement of the respective location along a second portion of said path, including a container for a body of heat-exchanging liquid, said container having a portion adjacent to said path and a succession of uniformly spaced depressions each having a shape substantially complementary to the desired shape of selected portions of the barrels, means for moving said container in synchronism with said carrier so that successive depressions register with successive locations in a second portion of said path, means for effecting relative displacement between successive barrels and the corresponding depressions so as to introduce the selected portions of such barrels into and to thereupon withdraw deformed selected portions from the corresponding depressions during travel of barrels at said locations toward, past and beyond said second portion of said path, and stationary temperature influencing means extending into said container and operative to influence the temperature of the liquid in said container.

4,302,175
APPARATUS FOR MOLDING RECORDED DISCS
Michael L. McNeely, Indianapolis, Ind., assignor to RCA Corporation, New York, N.Y.
Filed Jun. 26, 1980, Ser. No. 163,145
Int. Cl.³ B29D *17/00;* **B29C** *3/00*
U.S. Cl. 425—385 **7 Claims**

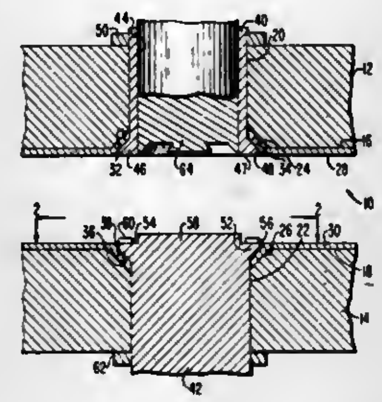

1. In an apparatus for molding recorded discs which includes a pair of opposed mold plates and a center hold down member in each mold plate for securing the center edge of a stamper to the mold plate, the improvement comprising,
one of said hold down members having indicia forming means on its surface for forming said indicia in the recorded disc as the disc is being molded.

4,302,176
TUBE EXPANDER
William F. Gordon, 56 Lake Ave., Third Lake, Ill. 60046
Filed Sep. 2, 1980, Ser. No. 183,018
Int. Cl.³ B29D *23/00*
U.S. Cl. 425—392 **12 Claims**

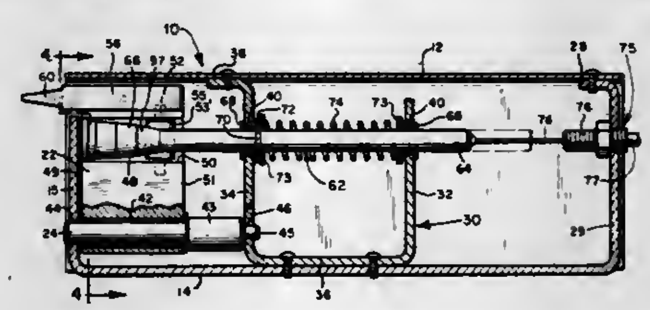

1. Apparatus for expanding flexible members comprising:
a housing;
first and second block means each pivotally mounted within said housing for rotation about an axis;
finger means coupled to each block means and extending from said housing transverse to each said block means for engagement in a flexible member;
cam follower means separate from said finger means and coupled to each of said block means for providing a camming surface; and
cam means supported for movement within said housing and coupled to engage said cam follower means for rotating each of said first and second block means about its axis.

4,302,177
FUEL CONVERSION APPARATUS AND METHOD
Martin O. Fankhanel, and Alfred K. Roosov, both of Houston, Tex., assignors to The M. W. Kellogg Company, Houston, Tex.
Continuation-in-part of Ser. No. 778,518, Mar. 17, 1977, abandoned, which is a continuation-in-part of Ser. No. 670,808, Mar. 26, 1976, abandoned. This application filed Jun. 5, 1978, Ser. No. 912,627
Int. Cl.³ F23D *11/44;* **F23L** *15/00*
U.S. Cl. 431—11 **7 Claims**

1. A method for vaporizing a No. 2 Fuel Oil for use in a burner normally used for natural gas, which comprises the steps of:

(a) superheating steam to a temperature of from about 600° F. to about 900° F. at a pressure of from about 150 to about 100 psig;
(b) mixing the superheated steam with said fuel oil in proportions of from about 0.1 to about 1.0 pounds of steam per pound of fuel oil;
(c) heating the mixture to vaporize 80 to 98 wt.% of the fuel oil to produce a gaseous mixture at a temperature of from about 500° F. to about 900° F. and a pressure of from about 75 to about 130 psig; and
(d) superheating the gaseous mixture, being substantially free of liquid fuel oil, to a temperature of from about 600° F. to about 800° F. at a pressure of from about 25 to about 45 psig whereby the gaseous mixture can be burned in a burner normally designed for burning natural gas.

4. Apparatus for vaporizing a normally liquid fuel oil such as Fuel Oil 2 through Fuel Oil No. 4 for use in a normally gas fired burner, which comprises:

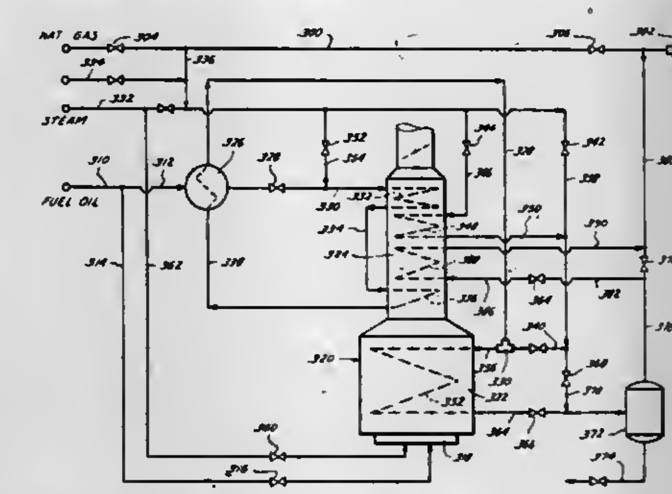

means for supplying a liquid fuel oil;
a fuel oil feed exchanger for preheating said fuel oil;
means for supplying a carrier gas;
a vaporizer furnace having a radiant heating zone and a convective heating zone,
a coil in said convective heating zone for further heating said fuel oil after passing through said exchanger,
a second coil in said convective heating zone for heating said carrier gas,
a heating coil in said radiant heating zone, and liquid fuel firing means for heating said vaporizer furnace;
means for mixing said heated carrier gas and said preheated fuel oil and introducing the mixture to said heating coil in said radiant heating zone for vaporizing said mixture to produce a gaseous mixture; and
means for superheating the gaseous mixture whereby such gaseous mixture is suitable for use in a normally gas fired burner.

4,302,178
VARIABLE PRESSURE VALVE
James L. Belknap, Parker City, and William P. Coppin, Muncie, both of Ind., assignors to Maxon Corporation, Muncie, Ind.
Filed Feb. 11, 1980, Ser. No. 120,263
Int. Cl.³ G05D *11/03*
U.S. Cl. 431—19 **7 Claims**

1. A pneumatically controlled, variable oil pressure regulator for maintaining a selected combustion ratio of oil and air in a furnace having a combustion air control valve for controlling flow of air to an orifice inlet supplying air through a combustion air line to the furnace combustion chamber with a back pressure impulse line connected thereto, the variable oil pressure regulator comprising:
a diaphragm housing;
a flexible air diaphragm sealingly disposed within said diaphragm housing to define a first air chamber in said diaphragm housing, said first air chamber communicating with the combustion air line downstream of the combustion air control valve and upstream of the furnace combustion chamber orifice inlet to receive and monitor the air pressure thereof, whereby the air pressure in the combustion air line is directed against said flexible air diaphragm which is distensible in response thereto;
a flexible oil diaphragm sealingly disposed within said diaphragm housing to define a second air chamber adjacent the first air chamber and connected to the back pressure impulse line communicating with the furnace combustion chamber to receive and monitor the pressure present in the combustion chamber within said second air chamber, whereby the air pressure in the combustion chamber is directed against both said air and oil diaphragms to sum algebraically the combustion air line pressure and the furnace combustion chamber pressure;
air diaphragm reenforcing means disposed in contacting relationship with said air diaphragm for substantially reenforcing the entirety of said air diaphragm and leaving only the peripheral regions of the air diaphragm not reenforced;
oil diaphragm reenforcing means disposed in contacting relationship with said oil diaphragm for substantially reenforcing the entirety of said oil diaphragm and leaving only the peripheral regions of the oil diaphragm not reenforced;

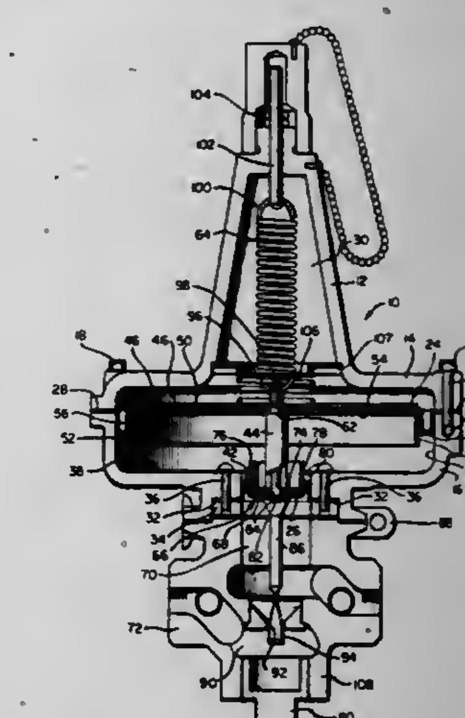

diaphragm spacer means disposed between said air diaphragm reenforcing means and said oil diaphragm reenforcing means within the second air chamber to dispose said reenforced air and oil diaphragm in fixed, spaced relationship and to move the oil diaphragm in response to the sum of the combustion air line pressure and the combustion chamber pressure;
a valve body connected to said diaphragm housing and defining an oil inlet chamber and an oil outlet chamber;
a valve orifice substantially circular shape in transverse cross-section disposed internally of said valve body and separating said oil inlet chamber from said oil outlet chamber for controlling the flow of oil therebetween;
a valve stem connected at the proximal end thereof with said oil diaphragm and extending longitudinally into said oil outlet chamber, thereby to move longitudinally in response to the movement of said oil diaphragm and thereby in response to the algebraically summed pressures of the combustion air line and the combustion chamber;
a valve plug disposed on and connected to the distal end of said valve stem for longitudinal displacement snugly within said valve orifice to regulate the flow of oil from said oil inlet chamber to said oil outlet chamber of the valve body, said valve plug having the shape of a solid of revolution formed by rotating a convexly curved surface which intersects the longitudinal axis of the valve stem

about said longitudinal axis, said convexly curved surface being selected from the group consisting of an arc of a circle of less than about 90°, a hyperbolic curve, a parabolic curve, or an elliptical curve whereby an elliptical shape is approximated further comprising spring loaded tension means operatively connected to said air and oil diaphragms for initially determining the longitudinal displacement of said valve plug within said valve orifice to fix thereby an initial ratio of oil pressure to air pressure, said spring loaded tension means comprising an adjusting tension coil spring which is attached at the distal end to said diaphragm spacer and at the proximal end to screw tension adjustment means to exert a longitudinal force in a first direction on said diaphragms; and a compensating compression coil spring disposed between a stationary spring support and said air diaphragm to exert a longitudinal force in a second direction on said diaphragms, said longitudinal oppositely directed forces in combination initially determining the displacement of said valve plug with respect to said valve orifice and thereby the oil to air ratio.

4,302,179
BURNER HOLDER WITH QUICK RELEASE AND LOCKUP MECHANISM
Richard S. Pont, Edinburgh, Scotland, assignor to Laidlaw, Drew & Co. Ltd., Edinburgh, Scotland
Filed Jan. 28, 1979, Ser. No. 53,137
Int. Cl.³ F23C *5/06*
U.S. Cl. 431—189 **6 Claims**

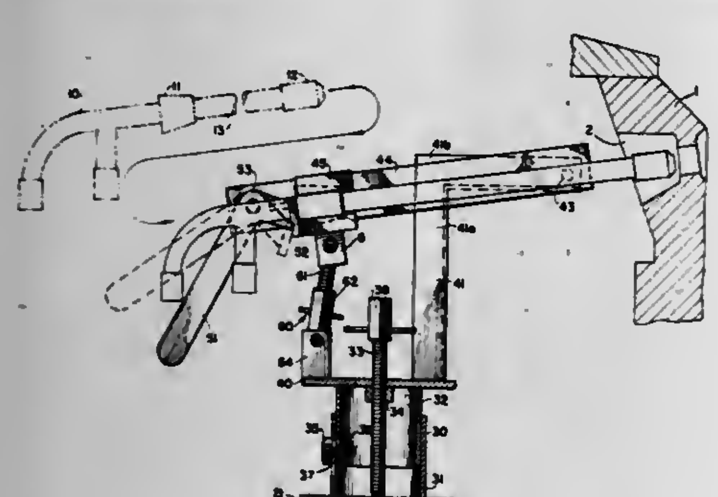

1. In a furnace firing system of the type having a furnace port, a burner including a nozzle at one end received in the port and means for mounting the burner to position the nozzle in the port at a desired firing angle, the improvement wherein: the burner comprises an elongated body having a frustoconical locating member fixedly mounted therearound adjacent the other end of the burner and tapering towards the one end; and wherein the mounting means comprises means connecting to the burner solely at the locating member comprising a receiving member having the inner surface thereof configured to closely receive the locating member, means for releasably retaining the locating member in the receiving member and means for pivoting the burner about a pivot axis disposed between the locating member and the nozzle and substantially adjacent the nozzle comprising a pivot arm extending between the pivot axis and the receiving member and connected to the receiving member at one end, a base and a mounting member connected to the base at one end and pivotally connected at its other end to the other end of the pivot arm at the pivot axis to enable the pivot arm to pivot about the pivot axis with respect to the mounting member.

4,302,180
FUEL BURNER
Joseph Le Mer, Cite bellevue, St. Thegonnec, France (29223)
Filed May 7, 1979, Ser. No. 36,453
Claims priority, application France, Jun. 26, 1978, 78 18998
Int. Cl.³ F23N *11/44*
U.S. Cl. 431—218 **13 Claims**

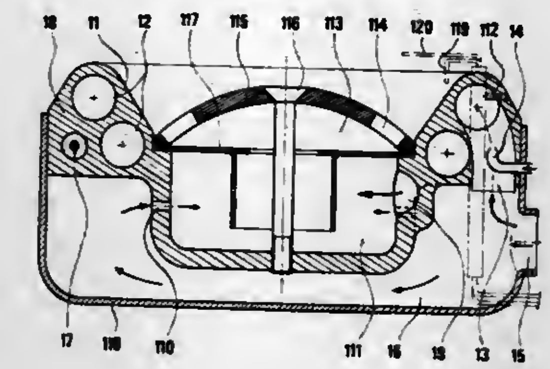

1. A fuel burner comprising:
(a) a vaporizing body;
(b) a vaporizing duct coiled within said vaporizing body;
(c) combustion initiating means;
(d) heating means for heating said burner body during start-up, said heating means comprising an electric resistance heater;
(e) a mixing chamber in fluid communication with said vaporizing duct;
(f) means for introducing a fuel into said vaporizing duct;
(g) means for introducing a vector fluid into said vaporizing duct for transporting said fuel;
(h) a combustion grid on which said fuel is burned in a flame; and
wherein said vaporizing duct and vaporizing body are positioned and configured whereby said flame at least partially licks said vaporizing body to heat said fuel passing through said vaporizing duct and wherein said resistance heater is positioned to heat said fuel and said vector fluid in said mixing chamber prior to passage through said combustion grid.

4,302,181
PIEZOELECTRIC IGNITER APPARATUS FOR GAS GRILL
Eric J. Schlosser, Lindenhurst, Ill., assignor to Weber-Stephen Products Co., Arlington Heights, Ill.
Filed Feb. 25, 1980, Ser. No. 124,558
Int. Cl.³ F23Q *3/00;* **F24B** *3/00*
U.S. Cl. 431—264 **5 Claims**

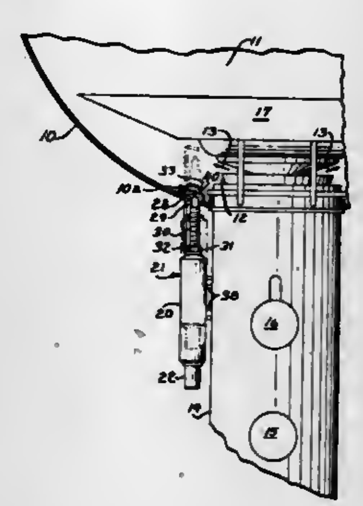

1. In an igniter apparatus for use with a device having a frame and a gas burner mounted in said frame, which burner produces a flame from gas and wherein the apparatus includes a piezoelectric current generator having a push-button and which when pressed by a given force in a given direction

moves along a line to cause the generator to produce an electric current, electrode means for being positioned at a given location at which gas will be ignited when there is a spark at the electrode means, and wire means connecting the generator and the electrode means for conducting the current to the electrode means for producing a spark at the electrode means, the improvement comprising:
a subframe;
carrier means interconnecting the frame and the subframe and guiding the subframe for movement along a given path in a first direction from a first position to only a second position and for movement along said path in a second direction from said second position to said first position;
said subframe being urged in said second direction to said position by a predetermined force, said predetermined force being less than said given force;
said generator being mounted on said subframe with said line of button movement generally parallel to said path and said given direction generally corresponding to said first direction;
said electrode means being mounted on said subframe in a position such that when the subframe is at said second position the electrode means is at said given location and when the subframe is at said first position the electrode means will be displaced from said given location and spaced a significant distance from said flame;
whereby said subframe will normally be at said first position by reason of said urging but when said button is pressed in said given direction said subframe will first move to said second position and only upon reaching there the pressure on the button will be effective to depress the button resulting in a spark at the electrode means.

4,302,182
PHOTOFLASH LAMP
John W. Shaffer, Williamsport, Pa., assignor to GTE Products Corporation, Stamford, Conn.
Filed Oct. 19, 1979, Ser. No. 86,502
Int. Cl.³ F21K *5/00*
U.S. Cl. 431—362 **10 Claims**

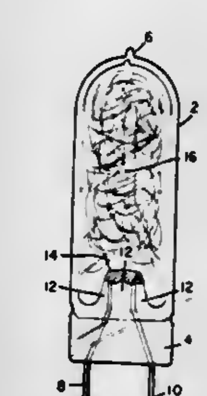

1. A photoflash lamp comprising:
an hermetically sealed, light-transmitting envelope;
a quantity of filamentary combustible material located within said envelope;
a combustion-supporting gas in said envelope; and
high voltage breakdown ignition means disposed in said envelope in operative relationship with respect to said filamentary combustible material, said ignition means including a pair of lead-in wires extending into said envelope in a spaced relationship, and primer material covering and bridging the terminations of said lead-in wires within said envelope, said primer material comprising a mixture of particulate fuel, a binding agent, and an additive of conductive fibers in an amount of from about 0.2 to 10.0 percent by weight of said primer mixture on a dried basis, whereby the breakdown voltage of said primer material is controlled by selection of the average length of said fibers and the weight percent of fiber additive in said mixture.

4,302,183
METHOD AND APPARATUS FOR USE WITH PLASTIC LINED PIPE
Richard E. Pero, Midland, Mich., assignor to The Dow Chemical Company, Midland, Mich.
Filed May 13, 1980, Ser. No. 149,404
Int. Cl.³ F24J *3/00*
U.S. Cl. 432—225 **5 Claims**

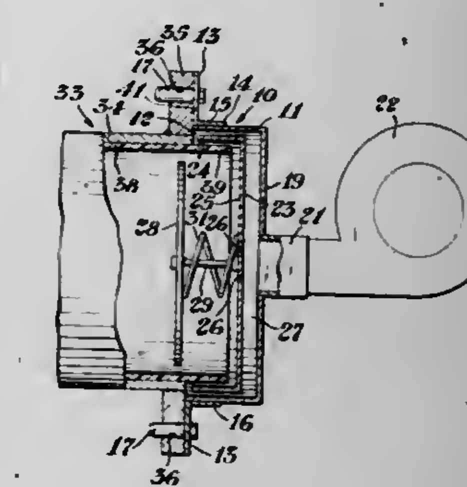

1. A heating apparatus particularly suited and adapted to heat a projecting end of a thermoplastic liner of a lined conduit, the apparatus comprising a first or outer housing having a generally cylindrical cup-like configuration, the outer housing having a first or open end terminating in a plane generally normal to the axis of generation of the generally cylindrical portion, the housing having a second or a closed end remotely disposed from the first end, the second end defining means to receive and generally uniformly radially distribute the heated gas, a second or inner housing of generally cylindrical configuration disposed within the first or outer housing, the inner housing having a first or open end disposed generally adjacent the first end of the outer housing, the plane of the open end of the inner housing being generally parallel to the plane of the opening of the outer housing and being displaced toward the second end of the outer housing, the inner housing having a second or closed end disposed generally adjacent and spaced from the second end of the outer housing, the inner housing being adapted to receive a projecting end of a thermoplastic liner of lined conduit, a generally discoidal baffle supported adjacent the first ends of the inner and outer parallel to the plane of the first end of the outer housings, the discoidal baffle lying in a place generally parallel to the plane of the first end of the outer housing and being disposed external to space enclosed by the outer housing.

4,302,184
METHOD AND DEVICE FOR ANIMAL TOOTH RESTORATION
Henry J. Carney, Star Rte. #1, Hatchett Ranch, Baird, Tex. 79504
Filed Aug. 6, 1980, Ser. No. 175,854
Int. Cl.³ A61D *5/00*
U.S. Cl. 433—1 **7 Claims**

1. A matrix device for use in restoring the worn teeth of grazing animals, comprising:
a band member formed into a loop;
adjustment means attached to said band member for adjusting the effective length of said band member;
support frame means connected to said band member for supporting said band member from a position remote therefrom;
means disposed on said frame means and slidable therealong for engaging the external surface of an animal's mouth for

holding said band member in position about an animal's teeth, band member comprising two separate bands, each of said separate bands being generally U-shaped in configuration with each of said U-shaped bands being curved longitudinally to conform to the gum of an animal whose

teeth are to be restored, said adjustment means including a chuck attached to one of said bands, a rod attached to the other of said bands, said rod being insertable in said chuck and movable in relation thereto, and means for tightening said chuck about said rod to lock the rod and separate bands in adjusted relation.

4,302,185
LIQUID CONTROL SYSTEM
Arthur L. Hall, 520 Bardon Rd., Knoxville, Tenn. 37919
Filed Jul. 19, 1979, Ser. No. 58,844
Int. Cl.^{3} A61C *1/00*
U.S. Cl. 433—27 **3 Claims**

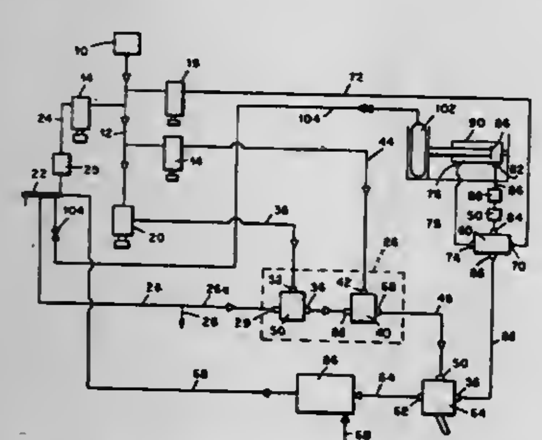

1. A liquid source system for supplying sterile liquid to a surgical tool comprising a flexible, inelastic vessel containing said sterile liquid, conduit means connecting said vessel to said tool, pressurizing means including a stationary first wall and a stationary second wall generally parallel to said first wall, a plate slidingly mounted between and generally parallel to said first and second walls, to define a vessel receiving zone adapted to receive said flexible, inelastic vessel between said plate and said first wall, and gas activatable cylinder means for urging said plate toward and away from said first wall when said flexible vessel is disposed within the vessel receiving zone, said gas activatable cylinder being connected by activating gas conduit means to sensor means adapted to sense exhaust gas from said tool and provide activating gas to said cylinder whereby liquid is supplied to said tool concurrently with drive gas, said sensor means comprising a low pressure amplifier having an inlet connected to exhaust conduit means from said tool, an amplifying gas inlet connected to an amplifying gas source and an amplifying gas outlet connected to an amplifying gas inlet of a high pressure amplifier having an activating gas inlet connected to an activating gas source and an activating gas outlet connected to said urging means.

4,302,186
ORAL HYGIENE APPLIANCES
Michael A. Cammack; Christopher W. Elkins; Clarence J. Hickman and Keith M. Mullins, all of Ft. Collins, Colo., assignors to Teledyne Industries, Inc., Ft. Collins, Colo.
Filed Nov. 23, 1979, Ser. No. 97,039
Int. Cl.^{3} A61C *17/02*
U.S. Cl. 433—80 **30 Claims**

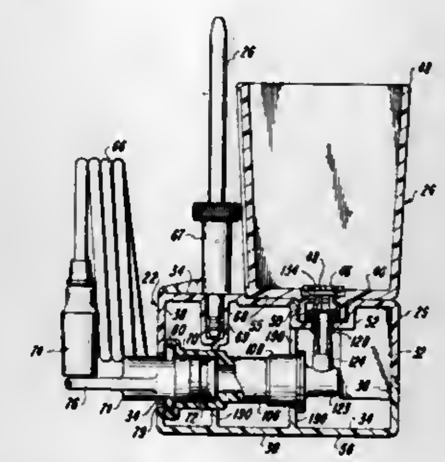

1. In a device which includes a supply of liquid, a pump for propelling said liquid, and means for delivering the propelled liquid to a point of use, the improvement comprising:

a housing defining a cavity having a surrounding wall closed by opposing end walls and with said pump being seated within said cavity;

a reservoir, closed at one end and open at the other end, having a shape in conformity with said housing to telescope thereover in covering relationship with said surrounding wall and one of said end walls;

a valve seat defined in said one end of said reservoir;

a valve normally closed to said valve seat with said supply of liquid contained in said reservoir during removal thereof from said covering relationship;

a coupling element on said one end of said reservoir and in liquid communication with said valve seat;

a coupling member disposed in said surrounding wall and matable in liquid communication with said coupling element upon placement of said one end adjacent to said surrounding wall and in a position overlying said coupling member;

an outlet disposed in a wall of said housing for fluid communication with said delivering means and in a location free of said one end during said placement;

and means connecting said pump between said coupling member and said outlet.

4,302,187
REMOVABLE ATTACHMENT FOR PARTIAL DENTURE
Han S. Yoon, 29-12, Kwan Hun Dong, Jong Ro Ku, Seoul, Rep. of Korea
Continuation-in-part of Ser. No. 883,843, Mar. 6, 1978, abandoned. This application Mar. 19, 1980, Ser. No. 131,830
Claims priority, application Rep. of Korea, May 23, 1977, 771212
Int. Cl.^{3} A61C *13/22*
U.S. Cl. 433—172 **10 Claims**

1. A removable attachment for a partial denture comprising;

(a) a support extending approximately the length of at least one tooth;

(b) a lock member adapted to have its outer surface function as the artificial tooth;

(c) one of the support or the lock member defining a receiving slot extending substantially the width thereof and having both wide and narrow slot sections and which is horizontal and at a right angle to the major axis of the denture;

(d) an extending surface formed to slidably engage the re-

ceiving slot in a relatively tight fit and extending from the other of the support or lock member;

(e) a protruding member which is adapted to be connected to and extend from an adjacent tooth;

(f) a recess defined by the support member and dimensioned to receive the protruding member when the support mem-

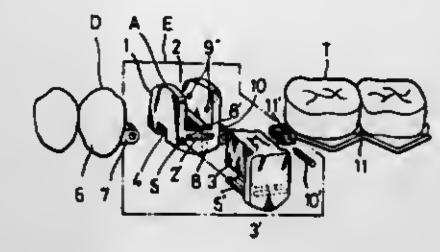

ber is positioned adjacent to the tooth from which the protruding member extends;

(f) a lock pin formed on the lock member and extending therefrom and which engages the protruding member when the lock member is slid along the slot to thereby secure the support to the adjacent tooth; and

(h) a means to attach the support to the partial denture.

4,302,188
PROSTHETIC DENTAL IMPLANTS
Thomas D. Driskell, Worthington, Ohio, assignor to Bio-Dynamics, Inc., Indianapolis, Ind.
Filed Jan. 24, 1980, Ser. No. 114,977
Int. Cl.^{3} A61C *8/00*
U.S. Cl. 433—173 **15 Claims**

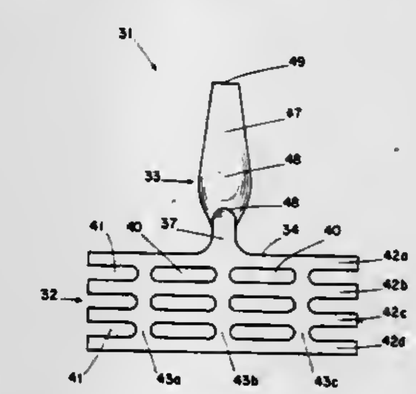

1. A prosthetic dental implant arranged to provide a supporting post for one or more artificial teeth, said prosthetic dental implant comprising:

a blade-like insertion member for anchoring into bone tissue, said insertion member including a plurality of oblong slot-like apertures disposed therein and a plurality of partial oblong slit-like apertures extending inwardly from the edges of said insertion member; and

a support post joined to the uppermost edge of said insertion member, said support post having a substantially circular lateral cross section throughout and an enlarged lower portion and said support post tapers inwardly as it extends upwardly from said enlarged lower portion.

4,302,189
DENTURE RETENTION
Barrie R. D. Gillings, Sydney, Australia, assignor to University of Sydney, Sydney, Australia
Filed Mar. 26, 1980, Ser. No. 134,226
Claims priority, application Australia, Mar. 29, 1979, PD8216
Int. Cl.^{3} A61C *13/22*
U.S. Cl. 433—189 **6 Claims**

1. A denture comprising a base having a gum tissue conforming surface, at least one artificial tooth mounted to the base, and at least one magnet element located in the base; the magnet element comprising a generally U-shaped magnet of strongly magnetic material and having spaced-apart pole faces which are disposed in a common plane, the magnet element being substantially totally enclosed within the denture base and having very thin pole caps located on the respective pole faces

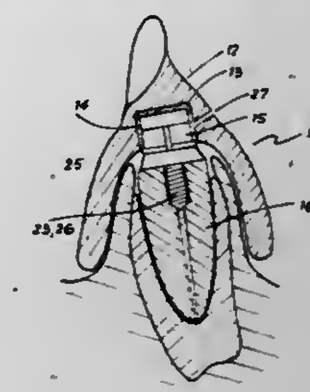

thereof, the pole caps being exposed at the tissue conforming surface of the denture base for engaging in abutting contact with a magnetisable element when the denture is fitted to a wearer, and the pole caps being formed from a material which exhibits magnetic permeability and which is substantially resistant to corrosion by oral juices.

4,302,190
RIFLE RECOIL SIMULATOR
Bon F. Shaw, Winter Park, and Albert H. Marshall, Orlando, both of Fla., assignors to The United States of America as represented by the Secretary of the Navy, Washington, D.C.
Filed Dec. 19, 1979, Ser. No. 105,176
Int. Cl.^{3} F41F *27/00*
U.S. Cl. 434—18 **11 Claims**

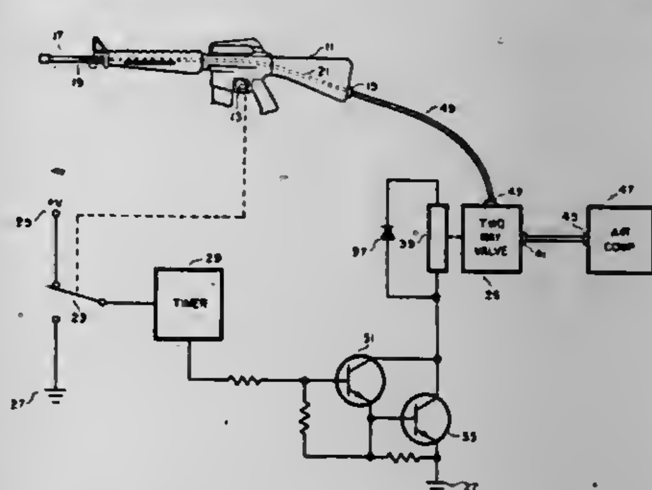

1. A recoil motion apparatus comprising in combination:

a voltage source;

a weapon having a trigger mechanism, an intake port, and a barrel, the barrel of said weapon having an orifice located near the tip thereof;

switching means effectively connected to the trigger mechanism of said weapon, and having a first input connected to said voltage source, a second input connected to ground, and an output for providing a trigger signal whenever a trainee rifleman activates the trigger mechanism of said weapon;

timing means having an input connected to the output of said switching means and an output for generating a trigger pulse having a predetermined time period in response to the trigger signal provided by said switching means;

compressor means having an output port for providing a stream of compressed air;

valve means having an intake port connected to the output port of said compressor means, an output port connected

to the intake port of said weapon for passing therethrough, whenever the trigger mechanism of said weapon is activated, the stream of compressed air provided by said compressor means to the intake port of said weapon; and solenoid means connected to said valve means and having a pair of terminals, with one of said pair of terminals connected to the output of said timing means for effecting the opening of said valve means in response to the trigger pulse provided by said timing means so as to allow the stream of compressed air provided by said compressor means to pass through the orifice of said weapon, said orifice being located so that the stream of air passing through said orifice will force the barrel of said weapon upward and to the right, so as to cause said weapon to recoil.

4,302,191
AIMING AND GUNNERY TRAINING APPARATUS
John L. Weibull, Möllegarden, S-230 47 Akarp, Sweden
Filed Mar. 24, 1980, Ser. No. 133,119
Claims priority, application Sweden, Mar. 28, 1979, 7902753
Int. Cl.³ F41G ***3/26***
U.S. Cl. 434—20 **7 Claims**

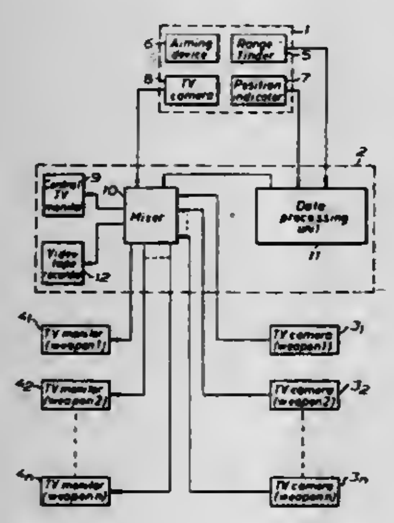

1. Training apparatus for aiming and firing at moving actual targets with a plurality of weapons intended for such targets, said apparatus comprising a target tracer (1) and an associated data processing unit (11) for deriving magnitudes representing the requisite aiming allowance point of each respective weapon from signals received from the target tracer which indicate range and direction to the target at different points of time, i.e. target parameters, and from magnitudes which represent the performance and position of the weapon, i.e. weapon parameters, a TV camera, ($3_1, 3_2, \ldots 3_n$) arranged in parallel with a direct aiming sight of the weapon and mounted on each weapon, a mixer unit (10) and a TV monitor (9), said TV camera being connectible, by the intermediary of said mixer unit (10) to said TV monitor (9) common to the weapons, whereby a signal corresponding to the magnitude representing the aiming allowance point of each weapon is combinable in said mixer with the video signal emanating from the TV camera of the weapon for supply to the TV monitor.

4,302,192
COMBINED PATTERN HOLDER AND PATTERN POSITION INDICATOR
Manny C. Hamburger, 2233 Oregon Ct., St. Louis Park, Minn. 55426
Filed Oct. 29, 1979, Ser. No. 88,795
Int. Cl.³ G09B ***19/20***
U.S. Cl. 434—95 **4 Claims**

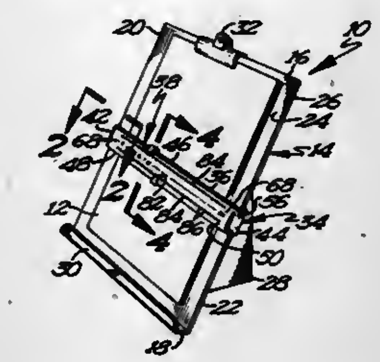

1. A device for simultaneously holding a pattern to be followed and indicating pattern information, with the pattern to be followed including several rows, with each of the rows including a plurality of instructions for performing various stitches, comprising, in combination: a pattern support member including a top edge, a bottom edge, a first side edge, a second side edge, a pattern support face, and a back face, with the pattern support face allowing the support of the pattern to be followed thereon; means for holding the pattern to be followed on the pattern support face of the pattern support member; and notation means for simultaneously delineating and also for visually summarizing the pattern position in the pattern to be followed at a single visual location, with the notation means comprising, in combination: means for visually highlighting the row of the pattern to be followed and means located on the visually highlighting means for indicating the position of the pattern to be followed, with the visually highlighting means being movable upon the pattern support face of the pattern support member in a direction generally parallel to the side edges and between the top and bottom edges, wherein the visually highlighting means comprises an elongated bar member having a first end, a second end, a top edge, a bottom edge, a first face, and a second face, wherein first and second grooves are formed in the back face of the pattern support member adjacent and parallel to but spaced from the side edges of the pattern support member, and wherein the elongated bar member is movably mounted upon the pattern support face of the pattern support member by first and second L-shaped members attached to the first and second ends of the elongated bar member and by first and second springs attached to the first and second L-shaped members, with the L-shaped members including a first leg attached to the end of the bar member which extends adjacent and parallel to the side edge of the pattern support member and include a second leg attached to the first leg which extends adjacent and parallel to but spaced from the back face of the pattern support member; and with the spring being attached to the second leg of the L-shaped member for slidable movement within the groove on the back face of the pattern support member.

4,302,193
READING TUTOR TIMER
Leonard S. Haynes, 1715 Glastonberry Rd., Rockville, Md. 20854
Filed Jan. 17, 1980, Ser. No. 112,844
Int. Cl.³ G09B ***5/06, 17/00***
U.S. Cl. 434—178 **11 Claims**

1. An audio-visual educational system comprising:

an audio reproduction device operable with an audio reproducing medium having an audio equivalent of a textual material and signals at points corresponding to selected demarcation points in the material; and

control means coupled to the audio reproduction device and operative in response to the signals to stop operation of the device, the control means including selectively operable control means which prevents the control means stop-

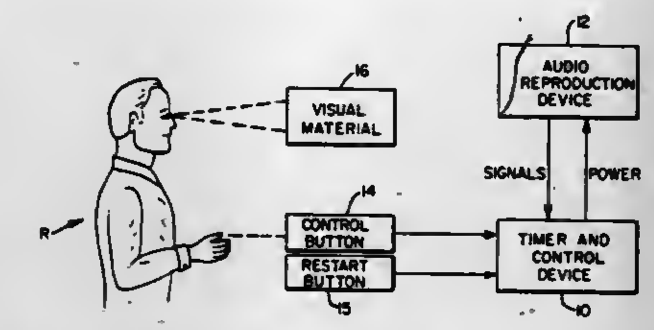

ping operation of the device when the selectively operable control means is actuated within a predetermined time span of the signals, and means to restart operation of the stopped reproduction device.

4,302,194
COMBINED AQUATIC SUPPORT AND PROPULSION DEVICE
Gavino R. Perales, 1854 Heidleman Rd., Los Angeles, Calif. 90032
Filed Apr. 14, 1980, Ser. No. 139,823
Int. Cl.³ B63H ***16/04***
U.S. Cl. 440—13 **6 Claims**

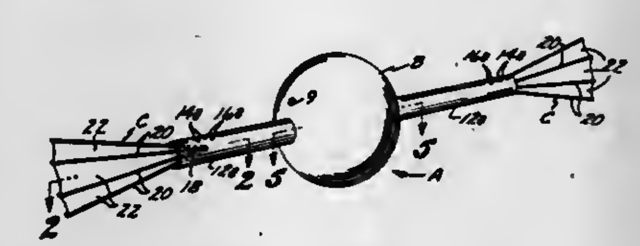

1. A swimmer's combined propulsion and support device which may be disposed to occupy a minimum of space when not in use and that includes:

a. a buoyant body;

b. a pair of rigid axially aligned tubes that extend outwardly from said body;

c. a pair of resilient triangular shaped fins that include apex portions, with one of said apex portions at all times slidably mounted in one of said tubes, and each of said tubes of sufficient length as to have said fin associated therewith slid into the interior thereof to a first position when said device is to be stored, and each of said fins capable of being manually moved outwardly in said tube with which it is associated to a second position to have the major portion of said fin project therefrom;

d. first means for preventing said pair of fins rotating relative to said pair of tubes when said pair of fins are in said second positions; and

e. second means for preventing said pair of fins inadvertently separating from said pair of tubes, and said device occupying a minimum of storage space when said pair of fins are in said first position.

4,302,195
POWERED TILTING TRANSOM FOR OUTBOARD BOATS
Gerald F. Bryant, P.O. Box 1402, Jonesboro, Ark. 72401
Continuation-in-part of Ser. No. 858,840, Dec. 8, 1977, abandoned. This application Jul. 24, 1979, Ser. No. 60,176
Int. Cl.³ B63H ***5/12***
U.S. Cl. 440—61 **16 Claims**

1. A powered tilting transom jacket for outboard motorboats, said jacket adapted to engage a variety of different boat transoms, and secure a variety of different outboard motors have mounting clamps, said transom jacket comprising:

(a) mounting means for securing said transom jacket to a pre-existing transom of an outboard motorboat, said mounting means adapted to be mounted on a variety of pre-existing transoms, said mounting means defining a pivot point inside the boat, below the top of the transom,

(b) a transom jacket for covering portions of the interior, top and exterior of said pre-existing boat transom, said jacket defining planar members on the interior and exterior of said boat with an inverted J-shaped cross section, the short leg of the J descending downwardly on the interior of the boat to said pivot point, the long leg of the J descending downwardly on the exterior of the pre-existing transom, said transom jacket connected to said mounting means at

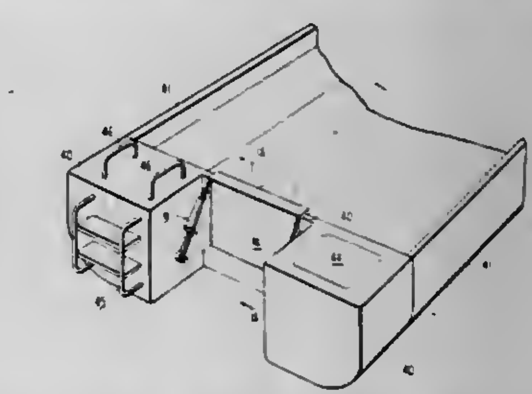

said pivot point to enable said transom jacket to be tilted from a first position to a second position,

(c) said planar members of said transom jacket defining an outboard motor mount for securing one or more outboard motors to said boat, said motors being mounted with their mounting clamps directly over the pre-existing transom when said transom jacket is in its first position, said transom jacket being arranged to pivot about said pivot point to bring said motor upwardly and inwardly of said pre-existing transom when said transom jacket is tilted to its second position,

(d) hydraulic cylinder means mounted to one of the downwardly descending legs of said transom jacket to tilt said transom jacket upwardly and inwardly of said pre-existing transom.

4,302,196
MARINE PROPULSION UNIT INCLUDING PROPELLER SHAFT THRUST TRANSMITTING MEANS
Clarence E. Blanchard, Kenosha, Wis., assignor to Outboard Marine Corporation, Waukegan, Ill.
Filed Jan. 24, 1979, Ser. No. 5,991
Int. Cl.³ B63H ***21/28***
U.S. Cl. 440—75 **10 Claims**

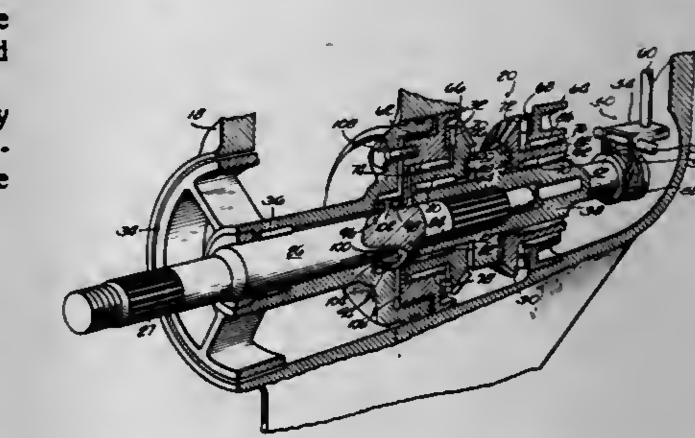

1. A marine propulsion device comprising a lower unit having a rotatably mounted drive shaft provided with a driving gear, a propeller shaft rotatably mounted in said lower unit and carrying a propeller, a drive gear rotatably carried coaxi-

ally with said propeller shaft and disposed in meshing engagement with said driving gear, a selector shaft mounted in said lower unit for rotation and for axial movement relative to said lower unit, one of said selector shaft and said propeller shaft having a splined end and the other of said selector shaft and said propeller shaft having a splined axially extending bore housing said splined end in splined relation whereby rotation of said selector shaft is imparted to said propeller shaft, and said selector shaft including an annular flange having an inner diameter and being integral with said selector shaft at said diameter, said flange also having thereon clutch dog means, said selector shaft being movably axially between a first position wherein said clutch dog means is drivingly connected with said drive gear and a second position wherein said clutch dog means is disengaged from said drive gear, and means for selectively axially moving said selector shaft.

4,302,197
TOOTHED BELT
Kazuo Kimura; Tooru Fujiwara, and Norio Harada, all of Osaka, Japan, assignors to Tsubakimoto Chain Co., Osaka, Japan
Filed Aug. 24, 1979, Ser. No. 69,434
Claims priority, application Japan, Sep. 13, 1978, 53/111667; Dec. 13, 1978, 53/153058
Int. Cl.³ F16G *1/10*
U.S. Cl. 474—267 **2 Claims**

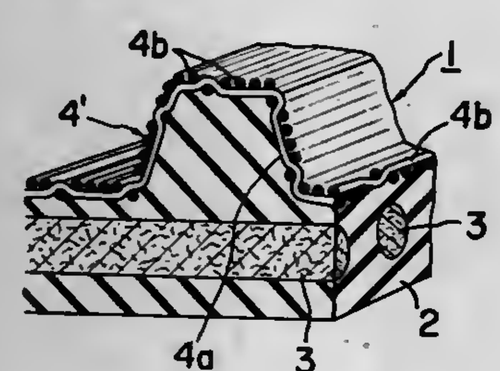

1. In an endless toothed power-transmitting belt having an endless rubber base portion with tension members buried in parallel therein, a plurality of rubber teeth integrally fixed to the base portion and projecting sidewardly therefrom in spaced relationship along the belt, and a cover cloth fastened to and overlying an exposed surface of the belt including the projecting tooth portions, comprising the improvement wherein the cover cloth consists of two fiber layers defined by warp and woof fibers which extend in transverse relationship and are interwoven with one another, one of said warp and woof fibers consisting of a first fiber which is highly adhesive, and the other of the warp and woof fibers consisting of a second fiber which has a low friction property and is resistant to abrasion, high temperature or corrosion so as to withstand the working environment to which the belt is exposed, said first and second fibers being interwoven so that one side surface of said cover cloth has most of its exposed surface defined by said first fiber, and whereas the other side surface of said cover cloth has most of its exposed surface defined by said second fiber, said cover cloth being positioned on and fixed to the belt such that said one side surface directly contacts and is adhesively joined to the exposed surface of the base and tooth portions, said other side surface of said cover cloth defining the exterior surface of the belt for contact with a driving or driven element.

4,302,198
ODD COPIES BUNDLING SYSTEM IN CONNECTION WITH FIXED COPIES AUTO-BUNDLING PROCESS
Tomoshi Kawada, Kawasaki, Japan, assignor to Kabushiki Kaisha Tokyo Kikai Seisakusho, Tokyo, Japan
Continuation of Ser. No. 817,444, Jul. 20, 1977, abandoned. This application Dec. 22, 1978, Ser. No. 972,399
Claims priority, application Japan, Jan. 26, 1977, 52-007543
Int. Cl.³ B65H *45/14*
U.S. Cl. 493—14 **7 Claims**

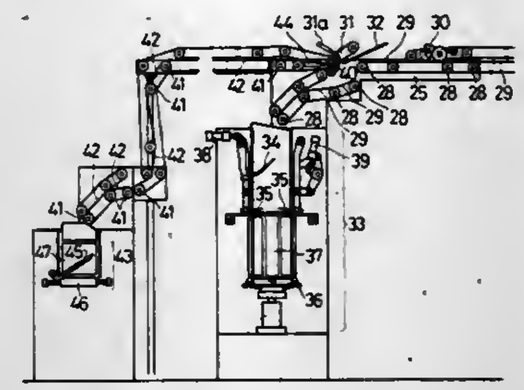

1. In a counter stacker, for dividing predetermined numbers S of printed copies, wherein S is the minimum number of copies able to be automatically divided in full speed printing, including a first path of conveyance, a counter for counting the number of printed copies disposed at a position along the first path of conveyance along which said copies are successively conveyed partially superimposed one on the other at a constant pitch of superimposing, a first dividing plate disposed at a position downstream from said counter along said first path of conveyance and adapted to be inserted between said copies, and a stacking and delivering means disposed at the end of said first path of conveyance,

an odd copies delivery system for delivering odd copies F wherein F is a lesser number than the predetermined number S of printed copies, characterized by comprising:

a second dividing plate for shunting printed copies on the first path of conveyance to a second path of conveyance, said second plate being located at substantially the same position as said first dividing plate,

the second path of conveyance branching from said first path of conveyance at said second dividing plate,

another stacking and delivering means disposed at the end of said second path of conveyance,

means for attaching labels onto bundles of said odd copies, on each of which is an address and a code for which the number F of said odd copies to be obtained is expressed,

means for effecting a first comparison of the sum of the predetermined number S of copies and the number F, including F=0, of said odd copies of a number of passing copies actually counted by said counter,

a mechanism for controlling said first dividing plate including means for moving said first dividing plate into said first path of conveyance to stop the flow of passing copies when the number counted by said counter reaches the sum of S+F,

means for effecting a second comparison of the predetermined number S of copies with a number of passing copies actually counted by said counter, only when F is not equal to zero, and

a mechanism for controlling said second dividing plate including means for moving said second dividing plate into said first path of conveyance when the number F of said odd copies is not equal to zero to divide the flow of passing copies such that said predetermined number S of copies is moved along said first path of conveyance and said number F of copies is directed along said second path of conveyance, said second dividing plate being actuated only after the second predetermined number S of copies have been counted by said counter.

CHEMICAL

4,302,199
HAIR DYEING METHOD
Prem S. Juneja, Cincinnati, Ohio, assignor to The Procter & Gamble Company, Cincinnati, Ohio
Filed Dec. 29, 1980, Ser. No. 220,639
Int. Cl.³ A61K *7/06*
U.S. Cl. 8—405 **10 Claims**

1. A method for coloring hair comprising sequentially treating the hair with a solution of from about 0.01% to about 5% of a water soluble ferric ion salt and with a solution of from about 0.01% to about 10% of a carboxylic acid or salt thereof selected from the group consisting of hydroxycinnamic acids, aminobenzoic acids, water soluble salts of these acids and mixtures thereof.

4,302,200
PROCESS FOR EXTRACTING ANTHOCYANIN-TYPE COLORS FROM NATURAL PRODUCTS
Isao Yokoyama, and Takeshi Ono, both of Yokohama, Japan, assignors to The Coca-Cola Company, Atlanta, Ga.
Filed Jun. 3, 1980, Ser. No. 155,922
Claims priority, application Japan, Jun. 8, 1979, 54-71143
Int. Cl.³ C07G *3/00;* **A23L** *1/27;* **C09B** *61/00;* **C07H** *15/04*
U.S. Cl. 8—438 **6 Claims**

1. A process for the extraction of an anthocyanin-type color from a natural product which comprises bringing the natural product containing said color into contact with a sulfite ion-containing aqueous solution at a temperature of 85° C. or higher for 30 minutes or less, at which time the sulfite ion content of said aqueous solution firstly contacting the natural product is adjusted to at least 10,000 ppm in terms of SO_2.

4,302,201
METHOD FOR DEVELOPING ELECTRICAL LATENT IMAGES
Tetsuo Hasegawa; Katsumi Nagamatsu, both of Tokyo, and Yoshihiro Nishikawa, Yokohama, all of Japan, assignors to Canon Kabushiki Kaisha, Tokyo, Japan
Continuation of Ser. No. 802,002, May 31, 1977, abandoned. This application May 14, 1979, Ser. No. 38,841
Claims priority, application Japan, Jun. 2, 1976, 51-64389; Jun. 8, 1976, 51-66923; Jul. 9, 1976, 51-81534; Aug. 16, 1976, 51-97583
Int. Cl.³ D06P *5/20*
U.S. Cl. 8—444 **16 Claims**

1. A textile printing method comprising at least the steps of

(i) mixing together at least two different component toners, each having the same polarity, and a dry carrier to obtain a dry developer and developing an electrical latent image with said dry developer; wherein the absolute value of the triboelectric charge of each component toner is more than 4 $\mu c/g$ and the difference in triboelectric charge between each component toner is less than 10 $\mu c/g$; wherein each component toner comprises fine particles of 1–100 microns in size and is composed of a binder resin having a dye or pigment dispersed therein; and wherein the binder resin of each component toner is the same and wherein the dye or pigment of each component toner is different;

(ii) transferring an amount of the resulting developed toner image onto a textile to provide an amount of transferred toner on said textile in the range of 0.5–1.5 mg/cm^2 as the image portion, and

(iii) dyeing the textile by using said transferring toner image.

4,302,202
TEXTILE TREATING COMPOSITION AND METHOD OF USE THEREOF
Jeffery L. Sumner, Raeford, N.C., and Arthur L. Tinsley, Taylors, S.C., assignors to Northwestern Laboratories, Inc., Greenville, S.C.
Filed Oct. 9, 1979, Ser. No. 82,578
Int. Cl.³ D06P *1/56, 5/12, 1/39, 3/852*
U.S. Cl. 8—455 **9 Claims**

1. A method for uniform dyeing of polyamide fibers or fabrics and leveling and fixing acid dyes thereto comprising adding to a dye bath containing an acid dye a composition consisting essentially of an aqueous solution of 60–85% by weight of solute of phenolsulfonic acid-formaldehyde condensate and 15–40% by weight of solute of an alkylene glycol of up to 3–10 carbon atoms or a polyoxyethylene or -thio glycol of molecular weight up to 1000, in an amount of 0.5–15% by weight of added solute and dyeing the polyamide fiber or fabric at the boil.

7. A method of improving wet fastness and resistance to perspiration of polyamide fibers dyed with an acid dyestuff, comprising adding to an exhausted dye bath from dyeing the polyamide fiber or fabric with an acid dyestuff a composition consisting essentially of an aqueous solution of 60–85% by weight of solute of phenolsulfonic acid-formaldehyde condensate and 15–40% by weight of solute of an alkylene glycol of up to 3–10 carbon atoms or a polyoxyethylene or -thio glycol of molecular weight up to 1000, in an amount of 0.5–15% by weight of added solute, adjusting pH of the resulting bath to 4.5–5.5 and heating the polyamide fiber in the thus-produced bath at 180°–200° F. for 15–45 minutes.

4,302,203
PROCESS FOR MODIFYING WOOL TO RENDER IT FLAME RESISTANT
Gerson Hermann, Westfield; Babubhai C. Patel, Edison, and Emil Baer, Westfield, all of N.J., assignors to Apex Chemical Company, Inc., Elizabethport, N.J.
Filed Nov. 23, 1979, Ser. No. 96,757
Int. Cl.³ D06M *3/02;* **D06P** *5/00, 5/02, 3/14*
U.S. Cl. 8—490 **12 Claims**

1. A process for enhancing the flame resistance of wool carrying a tetrahalophthalic acid in or on the fiber which comprises after treating the so-modified wool by contacting it with an aqueous medium containing, as a fixative capable of fastening the phthalic acid compound to the wool, a water soluble or water dispersible anionic phenolic sulfonate formaldehyde condensate, an alkali metal bichromate, or colloidal antimony oxide.

4,302,204
TRANSFER AND DETECTION OF NUCLEIC ACIDS
Geoffrey M. Wahl, Menlo Park, and George R. Stark, Ladera, both of Calif., assignors to The Board of Trustees of Leland Stanford Junior University, Stanford, Calif.
Filed Jul. 2, 1979, Ser. No. 54,200
Int. Cl.³ C12Q *1/68;* **G01N** *31/22, 33/16, 33/48*
U.S. Cl. 23—230.3 **12 Claims**

1. A process for the analysis of polynucleotides of at least ten bases which comprises:

combining a solid substrate having polynucleotides covalently affixed thereto with a hybridization solution containing labeled polynucleotides suspected of being complementary to said affixed polynucleotides and a charged polysaccharide of at least 10,000 molecular weight present in at least about 2 weight %; and

detecting the presence of labeled polynucleotides annealed to said affixed polynucleotides.

7. A method for analyzing double stranded DNA in a mixture having DNA molecules having chain lengths greater than 1 kb which comprises:

distributing said DNA mixture according to molecular

weight on a polysaccharide gel by means of gel electrophoresis;

fragmenting and denaturing said DNA to provide single stranded DNA of less than about 2 kb;

transferring at least a portion of said fragmented single stranded DNA to a chemically reactive solid substrate to covalently bond said transferred DNA to said substrate to provide DNA-substrate;

combining said DNA-substrate with a hybridizing solution containing labeled single stranded DNA suspected of being complementary to the DNA of said DNA substrate; and

determining the presence of labeled DNA bound to said DNA of said DNA-substrate by means of said label.

4,302,205

INPUT CONTROL METHOD AND MEANS FOR NITROGEN OXIDE REMOVAL

Ryoji Muraki, Nishinomiya; Shinichiro Takemura, Osaka; Tetsuo Ai, Kamakura, and Takaaki Kawasaki, Fuchu, all of Japan, assignors to Kurashiki Boseki Kabushiki Kaisha and Tokyo Shibaura Electric Co., Ltd., both of, Japan

Continuation of Ser. No. 873,057, Jan. 27, 1978, abandoned. This application Mar. 7, 1980, Ser. No. 128,125

Claims priority, application Japan, Jan. 31, 1977, 52-8711

Int. Cl.³ G05D *11/02*

U.S. Cl. 23—232 R **17 Claims**

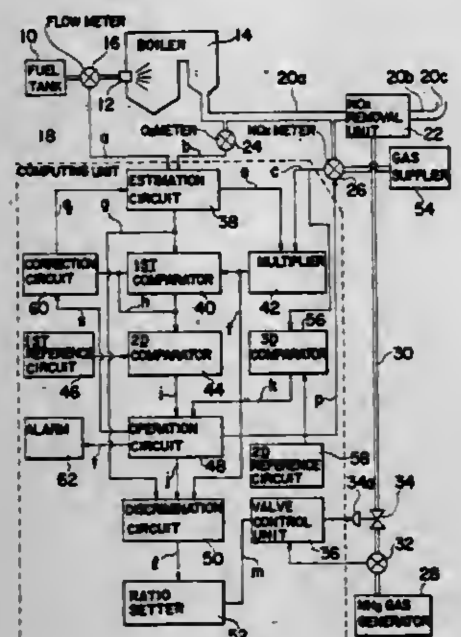

1. In a method for removing nitrogen oxide (NO_x) from flue-gas produced by a burner unit which is supplied with fuel, by an injection of NO_x removing agent into said NO_x removing means in an amount which is related to the amount of NO_x included in said flue-gas, wherein said amount of NO_x removing agent is controlled by a method comprising the steps of:

(a) detecting at least two factors relating to burning requirements and burning conditions by respectively detecting means for producing signals indicative of said respective factors, said two factors being selected from flow rate of fuel to the burner unit, concentration of oxygen in the flue-gas, concentration of carbon dioxide in the flue-gas, flow rate of air used in the combustion process effected in the burner unit, and the amount of flue-gas;

(b) calculating the amount of NO_x contained in said flue-gas directed to said NO_x removing means during a predetermined period of time by the application of said factors in a formula memorized in a computing means, said formula being changeable with respect to at least one of its constants;

(c) measuring the amount of NO_x contained in said flue-gas directed to said NO_x removing means during said predetermined period of time by an NO_x measuring means;

(d) comparing the calculated amount of NO_x with the measured amount of NO_x by a first comparing means for evaluating the difference therebetween and

(e) comparing the difference of step (d) with a predetermined range of tolerance for said difference by a second comparing means for producing a first signal when said difference is within the predetermined range and a second signal when said difference is outside said predetermined range;

the improvement wherein the following steps are performed subsequent to step (e)

(f) upon receipt of said second signal from said second comparing means, determining whether or not the NO_x measuring means is in order by an inspection means for producing third signal when said NO_x measuring means is in order and fourth signal when said NO_x measuring means is out of order;

(g) changing the factor of said formula of (b) in the computing means, upon receipt of said third signal from the inspection means for satisfying the formula to cause the calculated amount of NO_x to be substantially equal to the measured amount of NO_x; and

(h) controlling the amount of NO_x removing agent to be injected into said NO_x removing means in an amount in relation to the amount of NO_x by controlling means, said controlling means using either the calculated amount of NO_x or measured amount of NO_x when either the first or third signals is applied thereto, and using the calculated amount of NO_x when the fourth signal is applied thereto.

4,302,206

APPARATUS AND PROCESS FOR ANALYSIS OF GASEOUS NITROGEN TRICHLORIDE

Barry P. Profeta, Lake Charles, La., and David A. Shaw, Johnstown, Pa., assignors to Olin Corporation, New Haven, Conn.

Filed Oct. 31, 1980, Ser. No. 202,520

Int. Cl.³ G01N *21/33*

U.S. Cl. 23—232 R **15 Claims**

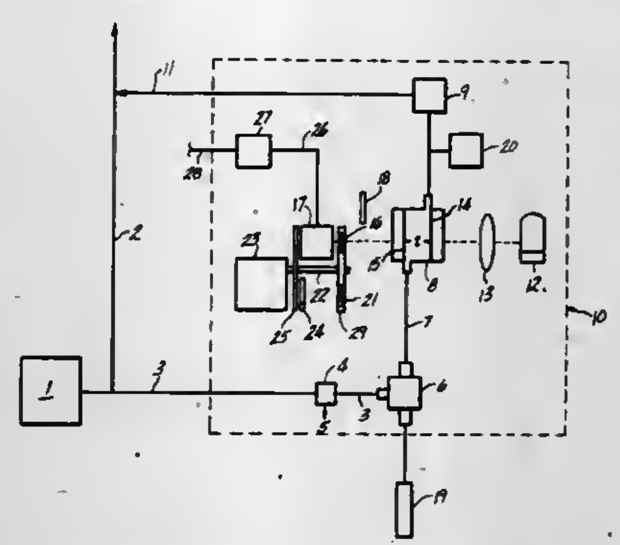

12. The process for analyzing nitrogen trichloride in gases containing it which comprises:

a. passing a sample of gas to be analyzed for nitrogen trichloride from a gas generating reaction through a sample cell of predetermined fixed thickness along a flow path perpendicular to said fixed thickness,

b. simultaneously passing ultraviolet light from an ultraviolet source through the gas sample across said predetermined fixed thickness, whereby light energy at a wavelength of about 218 nm is absorbed by nitrogen trichloride in the gas sample passing through said cell, and remaining unabsorbed light energy passes across said fixed thickness through said cell,

c. passing said remaining unabsorbed light energy through a first filter, whereby all of the remaining unabsorbed light energy other than about 218 nm is absorbed by the filter, the remaining filtered unabsorbed light of about 218 nm passes through said filter to a light detector means,

d. comparing said filtered unabsorbed light of about 218 nm in said light detector means with a predetermined standard of nitrogen trichloride concentration,

e. calculating the concentration of nitrogen trichloride in said gas sample, and

f. adjusting the reaction conditions in the gas generating reaction to maintain the concentration of nitrogen trichloride in subsequent gas samples within a predetermined range.

4,302,207

SULFUR GETTER EFFICIENCY

Stephen C. Paspek, North Royalton, Ohio, assignor to Standard Oil Company, Cleveland, Ohio

Filed Dec. 28, 1979, Ser. No. 108,101

Int. Cl.³ C10L *9/02*

U.S. Cl. 44—1 R **11 Claims**

6. A fuel composition comprising powdered coal containing sulfur, a calcium-containing compound capable of capturing said sulfur when said composition is burned, a gelling agent and water, said composition containing sufficient gelling agent and water so that said composition is a gel.

11. The composition of claim 6 wherein said calcium compound is at least one of $CaCO_3$ and CaO and further wherein said gelling agent is an aluminate, silicate, carbonate or bicarbonate of sodium or potassium.

4,302,208

GELLED FAE FUEL

Stanley E. Wood, Inyokern, and Bertram O. Stull, Ridgecrest, both of Calif., assignors to The United States of America as represented by the Secretary of the Navy, Washington, D.C.

Filed May 1, 1980, Ser. No. 145,642

Int. Cl.³ C10L *7/04*

U.S. Cl. 44—7 D **8 Claims**

1. A composition of matter consisting essentially of (1) a polar fuel; (2) a particulate gelling agent; and (3) a mixture of a first polyfunctional alcohol and a second polyfunctional alcohol, said first polyfunctional alcohol having an ether linkage and said second polyfunctional alcohol having no ether linkage.

4,302,209

LIGNITE PELLETS AND METHODS OF AGGLOMERATING OR PELLETIZING

Albert F. Baker; Eric W. Blaustein; Albert W. Deurbrouck; John P. Garvin, and Robert E. McKeever, all of Pittsburgh, Pa., assignors to The United States of America as represented by the United States Department of Energy, Washington, D.C.

Filed Jul. 30, 1979, Ser. No. 61,874

Int. Cl.³ C10L *5/02, 5/16*

U.S. Cl. 44—10 D **15 Claims**

1. A process for producing lignite fuel pellets of high compressive strength comprising the steps of:

crushing as mined lignite to a size suitable for pelletizing;

predrying said lignite to a moisture content which allows fluid replacement;

prewetting said crushed and dried lignite with water;

mixing said prewetted lignite with a binder comprising an asphalt and water emulsion in an amount sufficient on pelletizing and drying to provide strength for handling and shipping;

feeding the mixture of lignite and binder along with water to a pelletizing device having an inclined rotatable surface for receiving said mixture and water;

forming moist pellets of said mixture including lignite with asphalt and water emulsion by rotating said surface to cause a tumbling, cascading action and the adhesion of particles into pellet form; and

drying said pellets to a predetermined moisture level.

11. The process of claim 1 also comprising the step of contacting said crushed lignite with a solution of sulfuric acid to exchange hydrogen ions for sodium ions thereby removing sodium from the lignite.

4,302,210

FIREPLACE LOG

Norman B. Duncan, 301 S. Highland Ave., Bay C, Las Vegas, Nev. 89106

Filed Dec. 27, 1979, Ser. No. 107,668

Int. Cl.³ A41G *1/00;* C10L *5/36*

U.S. Cl. 44—24 **11 Claims**

1. An artificial log comprising by weight an evenly blended molded mixture of about 35–45% sawdust having a moisture content of about 10% by weight or less, 35–45% wax providing fuel for the continual burning of the log, 2–5% cotton linters for aerating the log and increasing the oxygen content thereof during burning, 15–25% charcoal powder fuel and sufficient binder to produce satisfactory consolidation during molding.

4,302,211

PROCESS FOR IMPROVING FLOW CHARACTERISTICS OF COAL PRODUCED BY DEWATERING AQUEOUS COAL SLURRIES

Eke Verschuur, Amsterdam, Netherlands, assignor to Shell Oil Company, Houston, Tex.

Filed Oct. 10, 1980, Ser. No. 195,980

Claims priority, application United Kingdom, Jan. 23, 1980, 2294/80

Int. Cl.³ C10L *5/14;* F26B *5/14*

U.S. Cl. 44—24 **1 Claim**

1. In a process for preparing a relatively dry coal product from aqueous slurries of, respectively, relatively fine and relatively granular coal particles by agitating the relatively fine particles in contact with water and a binder to form agglomerates which are mechanically separable from the liquid in which they were formed, mechanically separating the agglomerates from the liquid and mixing them with the relatively granular coal particles, the improvement comprising:

before said agglomerates are mechanically separated from liquid in which they were formed, mixing the liquid containing them with a slurry of the relatively granular particles in proportions such that the agglomerates constitute from about 20 to 65% by weight of the solids within that mixture; and

subsequently dewatering the mixture under conditions causing the disintegration of at least a significant proportion of said agglomerates.

4,302,212

DISPERSING AGENTS FOR AN AQUEOUS SLURRY OF COAL POWDER

Masaaki Yamamura; Noboru Moriyama, and Shinichi Watanabe, all of Wakayama, Japan, assignors to Kao Soap Company, Limited, Tokyo, Japan

Filed Jul. 1, 1980, Ser. No. 165,063

Claims priority, application Japan, Jul. 26, 1979, 54-95174

Int. Cl.³ C10L *1/32*

U.S. Cl. 44—51 **18 Claims**

1. An aqueous slurry of coal powder having good flowability properties, which comprises coal powder, water and, as a dispersing agent therefor, an anionic surface active agent having the formula:

$$[R-O-(CH_2CH_2O)_m-SO_3]_nM$$

wherein R is an alkyl or alkenyl group having 6 to 22 carbon atoms or an alkyl- or alkenyl-substituted aryl group having 4 to 22 carbon atoms in the substituent thereof, m is an integer of from 2 to 50, n is a number of from 1 to 3 and is the same as the

valence of the counter ion M, and M is a cation having a valence of from 1 to 3.

4,302,213
FUEL COMPOSITIONS CONTAINING ALCOHOL AND SAPONIFIED FATTY MATERIAL AND METHOD OF PREPARING SAME

Miguel R. Lezcano, 5414 Park Ave., West New York, N.J. 07093

Filed Jul. 23, 1980, Ser. No. 108,140
Int. Cl.^{3} C10L *1/18*

U.S. Cl. 44—56 6 Claims

1. A process for making an internal combustion engine fuel comprising:

(a) Dissolving one part by weight of saponified fatty material in two parts by weight of ethanol to form a saponified fatty material-alcohol solution; and

(b) Mixing between 0.4% and 6% by volume of the saponified fatty material-alcohol solution with between 99.6% and 94% by volume of 199 proof ethanol.

4,302,214
MOTOR FUEL COMPOSITION

W. Alan Sweeney, Larkspur, Calif., assignor to Chevron Research Company, San Francisco, Calif.

Filed May 30, 1980, Ser. No. 155,044
Int. Cl.^{3} C10L *1/18*

U.S. Cl. 44—56 6 Claims

1. A gasoline motor fuel comprising a major portion of gasoline-boiling-range compounds and from 0.1 to 49 volume percent di-(t-pentoxy)methane.

4,302,215
DEPOSIT CONTROL ADDITIVES AND THEIR FUEL COMPOSITIONS

Robert A. Lewis, Berkeley, Calif., assignor to Chevron Research Company, San Francisco, Calif.

Filed Nov. 13, 1978, Ser. No. 960,345
Int. Cl.^{3} C10L *1/22*

U.S. Cl. 44—71 9 Claims

1. A hydrocarbyl carbonate comprising a hydrocarbyl group of from 500 to 10,000 molecular weight and the hydroxyl and/or a tertiary amino-containing group of from about 80 to about 700 molecular weight, wherein said hydrocarbyl group is a polyalkylene group comprised of C_2–C_6 alkylene units.

4,302,216
ANTI-STATIC ADDITIVES

James R. Spence, Warrenville, Ill., assignor to Standard Oil Company (Indiana), Chicago, Ill.

Division of Ser. No. 900,102, Apr. 26, 1978, Pat. No. 4,252,542, which is a continuation-in-part of Ser. No. 810,378, Jun. 27, 1977, abandoned. This application Feb. 25, 1980, Ser. No. 124,095
Int. Cl.^{3} C10L *1/18, 1/22*

U.S. Cl. 44—71 5 Claims

1. An aminomethylene sulfonic acid anti-static composition comprising the reaction product of:

A. an adduct of a polyamine and a hydrocarbyl succinic anhydride:

B. about 0.5 to 1.5 equivalents of a carbonyl compound having the formula:

$$R_2-\overset{\displaystyle O}{\overset{\|}{C}}-R_3$$

wherein R_2 comprises a hydrogen or methyl group and R_3 comprises a hydrogen or an alkyl group having 1 to 7 carbon atoms, per equivalent of component A and

C. about 0.1 to 2.0 equivalents sulfur dioxide per mole of component A.

4,302,217
HYDROGEN SUPPLY SYSTEM

Robert J. Teitel, P.O. Box 81921, San Diego, Calif. 92138

Continuation-in-part of Ser. No. 927,203, Jul. 24, 1978, Pat. No. 4,211,537. This application Mar. 20, 1980, Ser. No. 132,103
Int. Cl.^{3} F02M *21/02*; F17D *3/01*

U.S. Cl. 48—180 C 29 Claims

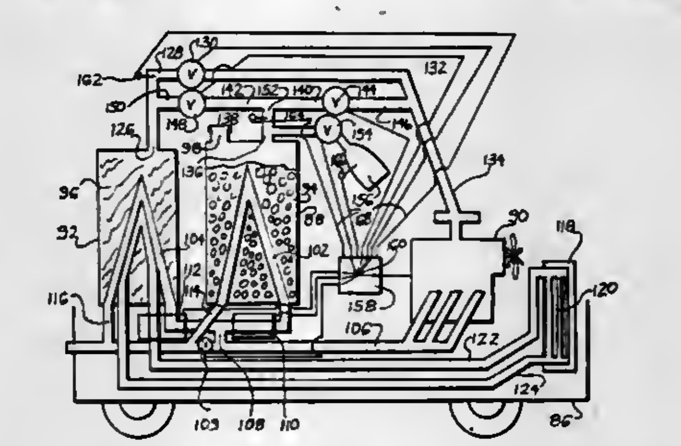

27. A hydrogen supply system for a combustion engine equipped with an air hydrogen mixing means applying a combustible mixture of hydrogen and air to said combustion engine which comprises:

a metal hydride hydrogen supply means including a first storage tank and located within said first storage tank a quantity of a composition containing at least one metal capable of absorbing hydrogen and forming a metal hydride when exposed to hydrogen and said metal hydride capable of being thermally decomposed so as to release hydrogen;

a microcavity hydrogen storage hydrogen supply means including a second storage tank and microcavity means containing hydrogen encapsulated within said microcavity means located within said second storage tank;

a first conduit means operatively connected to said metal hydride hydrogen storage means for supplying hydrogen from said metal hydride hydrogen storage means to said air-hydrogen mixing means;

a second conduit means operatively connected to said microcavity hydrogen storage hydrogen supply means for supplying hydrogen from said microcavity hydrogen storage hydrogen supply means to said metal hydride hydrogen storage means;

a first control means operatively associated with said metal hydride hydrogen supply means for regulating the absorption/deabsorption of hydrogen from said metal hydride hydrogen supply means by regulating the temperature of said composition within said metal hydride hydrogen supply means;

a second control means operatively associated with said microcavity hydrogen storage hydrogen supply means for regulating the release of hydrogen from said microcavity hydrogen storage hydrogen supply means;

a first valve means operatively associated with said first conduit means for regulating the flow of hydrogen through said first conduit means;

a second valve means operatively associated with said second conduit means for regulating the flow of hydrogen through said second conduit means; and,

a third valve means operatively associated with said third conduit means for regulating the flow of hydrogen through said third conduit means;

said microcavity means comprises a quantity of microspheres containing hydrogen encapsulated within said microspheres, said microspheres being capable of releasing the hydrogen contained therein upon the application of heat to said microspheres;

said second control means includes heating means within said second storage tank for heating said microspheres;

said heating means comprises at least one hollow tube within said second storage tank;

said engine including a hot exhaust gas discharge means;

said hollow tube connecting to said hot exhaust gas discharge means such that hot exhaust gasses from said hot exhaust gas discharge means can pass through said hollow tube heating the contents within said second storage tank;

hot exhaust gas flow means for regulating the flow of hot exhaust gasses through said hollow tube;

said metal hydride is iron titanium hydride;

said first control means includes a heat exchanger within said first storage tank, said heat exchanger absorbing or releasing heat to said composition within said first storage tank;

said heat exchanger comprises at least one hollow tube within said first storage tank;

said hot exhaust gas discharge means connecting to said hollow tube such that hot exhaust gasses from said hot gas discharge means can pass through said hollow tube heating said contents in said first storage tank;

said heat exchanger includes at least one coolant conducting tube means;

a coolant supply means;

said coolant supply means supplying coolant to said coolant conducting tube means such that heat from said first storage tank is withdrawn by coolant flowing through said coolant conducting tube means;

a second hot exhaust gas flow means for regulating the flow of hot exhaust gasses through said heat exchanger;

a coolant flow means for regulating flow of coolant through said heat exchanger.

28. A hydrogen supply system for a hydrogen fueled apparatus which comprises:

a metal hydride hydrogen supply means including a first storage tank and located within said first storage tank a quantity of a composition containing at least one metal capable of absorbing hydrogen and forming a metal hydride when exposed to hydrogen and said metal hydride capable of being thermally decomposed so as to release hydrogen;

a microcavity hydrogen storage hydrogen supply means including a second storage tank and microcavity means containing hydrogen encapsulated within said microcavity means located within said second storage tank;

a first conduit means connecting said microcavity hydrogen storage hydrogen supply means to said apparatus;

a second conduit means connecting said microcavity hydrogen storage hydrogen supply means to said metal hydride hydrogen storage means;

a first valve means operatively associated with said first, second conduit means for regulating the flow of hydrogen through said first conduit means;

a second valve means operatively associated with said second conduit means for regulating the flow of hydrogen through said second conduit means;

control means operatively associated with said metal hydride hydrogen supply means and said microcavity hydrogen storage hydrogen supply means for controlling hydrogen release from said metal hydride hydrogen supply means and said microcavity hydrogen storage hydrogen supply means.

4,302,218
PROCESS FOR CONTROLLING SULFUR OXIDES IN COAL GASIFICATION

Louis D. Friedman, New Brunswick, N.J., assignor to FMC Corporation, Philadelphia, Pa.

Filed Jun. 16, 1980, Ser. No. 159,546
Int. Cl.^{3} C10J *3/00*

U.S. Cl. 48—197 R 7 Claims

1. In the gasification of carbonaceous solids with steam to give product gas containing carbon monoxide and hydrogen wherein the gasification is effected by feeding a stream of said solids and steam into a gasification reaction zone and wherein there is produced in conjunction with said gasification a sulfur dioxide containing flue gas formed in a combustion zone in which recycle solids are heated to provide the thermal requirements of the gasification reaction zone, the improvement of removing the sulfur dioxide from said flue gas comprising the steps of:

(1) contacting said flue gas with at least a portion of said stream of carbonaceous solids so as to adsorb said sulfur dioxide thereon and produce carbonaceous solids charged with sulfur dioxide and purified flue gas;

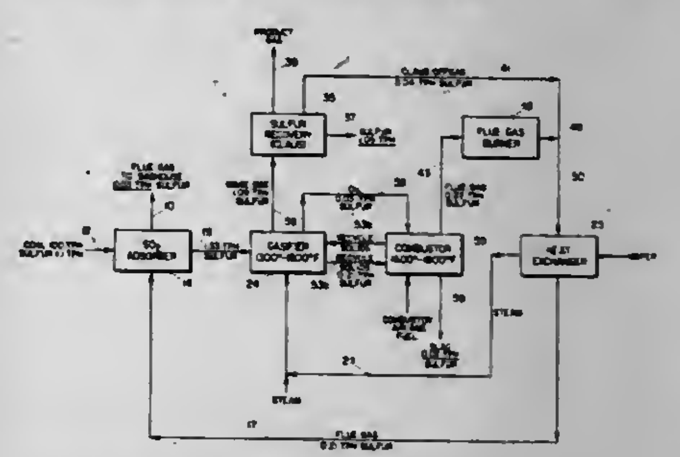

(2) venting the purified flue gas;

(3) introducing the so charged carbonaceous solids into said gasification reaction zone whereby the adsorbed sulfur dioxide is reduced to free hydrogen sulfide whereby there is formed a gaseous mixture of said hydrogen sulfide with product gas;

(4) introducing said gaseous mixture into a separation zone wherein the hydrogen sulfide is removed from said gaseous mixture; and

(5) recovering said product gas substantially free of sulfur.

4,302,219
PROCESS FOR PRODUCING SYNTHETIC FUEL GAS BY REACTING LIQUID HYDROCARBONS WITH HYDROGEN

Howard D. Simpson; Hugh W. Gowdy, both of Irvine, and Steven D. Light, Fullerton, all of Calif., assignors to Union Oil Company of California, Brea, Calif.

Division of Ser. No. 72,662, Sep. 5, 1979. This application Dec. 5, 1980, Ser. No. 213,505
Int. Cl.^{3} C07C *9/04*

U.S. Cl. 48—213 8 Claims

1. A process for the synthesis of menthane-containing synthetic fuels from a natural or synthetic liquid hydrocarbon feedstock which comprises contacting said liquid hydrocarbon feedstock and hydrogen, under methane forming reaction conditions, with a methanation catalyst comprising an interspersed mixture of metals selected from Groups IV(B), V(B), or VI(B) in combination with two Group VIII metals, composited with an inorganic refractory oxide support or matrix; said methanation catalsyt having an average pore diameter of from about 60 A to about 400 A; a surface area ranging from about 50 M^2/g to about 500 M^2/g; a pore volume of from about 0.2 cc/g to about 0.8 cc/g; a compacted bulk density of from about 0.6 to about 1.2; and wherein said catalyst comprises either Group IV(B), V(B) or VI(B) metals or a mixture thereof; combined with two Group VIII metals; and an inorganic refractory oxide support or matrix in a molar ratio range of from about 10:20:70 to about 1:1:98; and wherein the methane forming reaction conditions comprise a temperature of from about 500° F. to about 1,500° F., a pressure of from about 50 p.s.i.g. to about 15,000 p.s.i.g., a hydrogen flow rate of from about 100 to about 15,000 standard cubic feet (SCF) of hydrogen per barrel of liquid hydrocarbon feedstock per hour, and a liquid hourly space velocity (LHSV) of from about 0.5 to

about 5.0 volumes of natural or synthetic liquid hydrocarbon feedstock per volume of catalyst per hour.

4,302,220
SIMULTANEOUS REMOVAL OF WATER AND HYDROGEN SULFIDE FROM GASES
Klaus Volkamer, Frankenthal; Ulrich Wagner, Limburgerhof, and Eckhart Wagner, Ladwigshafen, all of Fed. Rep. of Germany, assignors to BASF Aktiengesellschaft, Fed. Rep. of Germany
Filed May 30, 1980, Ser. No. 154,894
Claims priority, application Fed. Rep. of Germany, Jun. 7, 1979, 2923012
Int. Cl.³ B01D ***53/14***
U.S. Cl. 55—32 **5 Claims**

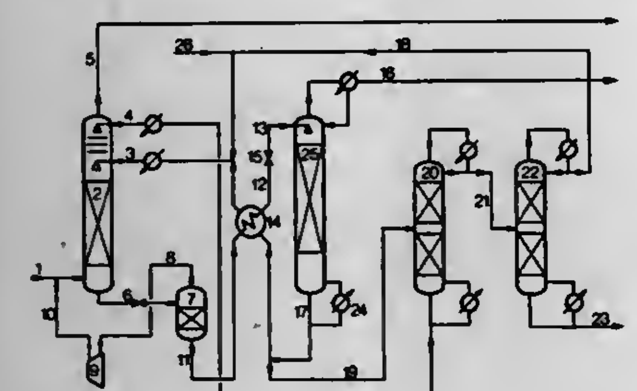

1. A process for simultaneously removing water and hydrogen sulfide from gases containing both water and hydrogen sulfide, which comprises:
(a) treating the gases, in an absorption zone under superatmospheric pressure, with polyethylene glycol dialkyl ethers as a solvent, said solvent additionally containing from 0.01 to 20% by weight, based on the solvent mixture, of an alcohol or ether boiling in the range of from 50° to 140° C.,
(b) introducing the charged solvent, obtained from the absorption zone, into the upper half of a desorption zone,
(c) stripping the hydrogen sulfide from the charged solvent in the desorption zone by using the vapor, formed in the desorption zone, of the alcohol or ether boiling at from 50° to 140° C. and contained in the solvent, as stripping agent, said stripping agent being led in counter-current to the charged solvent,
(d) taking off at the top of the desorption zone the stripped-off hydrogen sulfide,
(e) condensing the alcohol or ether vapor contained in the hydrogen sulfide taken off at the top of the desorption zone and recycling the condensed alcohol or ether,
(f) taking off the regenerated solvent from the desorption zone and recycling it to the absorption zone,
(g) taking off a branch stream from the recycled solvent and removing the water completely or partially from the branch stream in a separation zone, and
(h) recycling the branch stream, obtained from the separation zone to the absorption zone.

4,302,221
PROCESS FOR REGENERATION OF CARBONACEOUS ADSORBENT FOR USE IN DESULFURIZATION OF EXHAUST GAS
Hiromi Tanaka, Abiko, Japan, assignor to Sumitomo Heavy Industries, Ltd., Tokyo, Japan
Filed Mar. 3, 1980, Ser. No. 126,765
Claims priority, application Japan, Mar. 9, 1979, 54-27411
Int. Cl.³ B01D ***53/08***
U.S. Cl. 55—60 **4 Claims**

1. A process for regenerating spent carbonaceous adsorbent particles which have been used to effect dry desulfurization of a sulfur oxide-containing exhaust gas so that said spent carbonaceous adsorbent particles contain adsorbed sulfur oxide material, which comprises the steps of: mixing said spent carbonaceous adsorbent particles with an inert purging gas to form a first mixture of said spent carbonaceous adsorbent particles and said inert purging gas; then feeding said first mixture downwardly through a heating zone and therein heating said first mixture by indirect heat exchange with a heating gas to a regeneration temperature effective to desorb said sulfur oxide material from said carbonaceous adsorbent particles whereby to regenerate said carbonaceous adsorbent particles and to transfer the desorbed sulfur oxide material into said inert purging gas to form a second mixture of said regenerated carbonaceous adsorbent particles, said desorbed sulfur oxide material and said inert purging gas; then feeding said second mixture downwardly into a separating zone and therein removing a third mixture of said desorbed sulfur oxide material and said inert purging gas from the upper portion of said separating zone and separately removing said regenerated carbonaceous adsorbent particles from the lower portion of said separating zone.

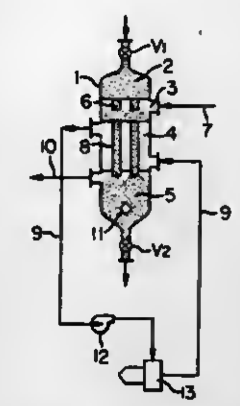

4,302,222
METHODS AND APPARATUS FOR CONTINUOUS PREPARATIVE CHROMATOGRAPHIC SEPARATION OF FLUID MIXTURES
Bernard Miller; Henry L. Friedman, both of Princeton, N.J., and Charles H. Meiser, Jr., Yardley, Pa., assignors to Textile Research Institute, Princeton, N.J.
Filed Feb. 14, 1980, Ser. No. 121,775
Int. Cl.³ B01D ***15/08***
U.S. Cl. 55—67 **37 Claims**

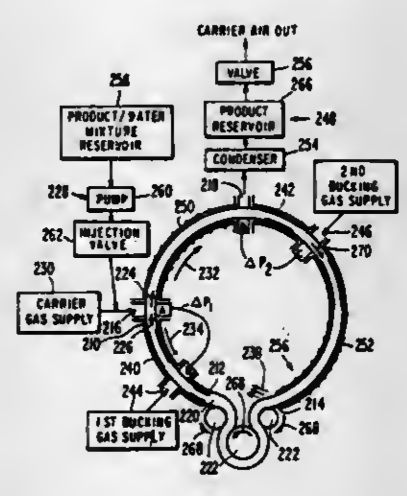

18. A continuous reciprocating process for preparative chromatographic separation of unwanted volatile species from a volatile product comprising:
(a) introducing a charge of mixture of volatile species and volatile product into a carrier gas supply;
(b) volatilizing the charge of mixture, said volatilizing and said introducing comprises injecting the mixture into the carrier gas with an injection valve, said injecting being performed through a capillary tube into the carrier gas to prevent back flow and to minimize any additional volatilizing of material after the original charge has been introduced into the carrier gas;
(c) pumping the mixture from a mixture reservoir to be introduced into the carrier gas;
(d) passing the carrier gas through a conduit containing a continuous polymeric solid to allow the volatile species to be adsorbed to the solid and to allow the volatile product to pass therethrough much more quickly;
(e) heating the continuous polymeric solid to control the flow rates therethrough and heating the carrier gas and the mixture to facilitate said volatilizing;
(f) collecting the product after passage through the conduit, said collecting of the product further including cooling of the product after passing out of the conduit for condensing thereof;
(g) collecting the volatile species expelled from the conduit including venting of the collected water to the atmospheric environment to facilitate said collecting; and
(h) applying the carrier gas to the conduit in a reverse direction to expel the adsorbed volatile species therefrom back through the original direction in which the mixture passed into the conduit to make the conduit ready to receive a new charge of mixture.

4,302,223
AIR REMOVAL DEVICE
Franklin W. Booth, Hampton, and Robert A. Bruce, Newport News, both of Va., assignors to The United States of America as represented by the Administrator of the National Aeronautics and Space Administration, Washington, D.C.
Continuation of Ser. No. 810,576, Mar. 26, 1969, abandoned. This application Feb. 27, 1976, Ser. No. 662,181
Int. Cl.³ B01D ***53/22***
U.S. Cl. 55—158 **3 Claims**

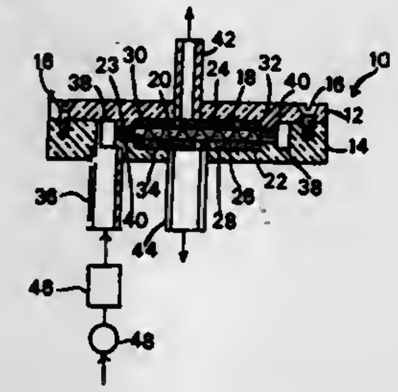

1. A separator device for separating a mixture of gas entrained in water comprising:
a hydrophilic porous membrane;
a hydrophobic porous membrane;
enclosure means forming a fluid chamber including portions of said membranes and means spacing said membranes parallel to each other including a spacer member extending around said portions;
input means for directing said mixture to said chamber and including a chamber extending about the spacer and also including a plurality of openings extending through said spacer into the fluid chamber;
means for creating a pressure differential across said portion of said hydrophilic porous membrane so as to cause outward flow of said water; and
means for creating a pressure differential across said portion of said hydrophobic porous membrane and for creating an outward movement of said gas without overcoming the negative capillary forces which form a water barrier, whereby selective transfer of gas and water through said portions produces separation of said mixture in both zero g and one g environments.

4,302,224
COMPACT OXYGEN CONCENTRATOR
Norman R. McCombs, Tonawanda, and John Schlaechter, Kenmore, both of N.Y., assignors to Greene & Kellogg, Inc., Tonawanda, N.Y.
Filed Oct. 12, 1979, Ser. No. 84,305
Int. Cl.³ B01D ***53/04***
U.S. Cl. 55—160 **94 Claims**

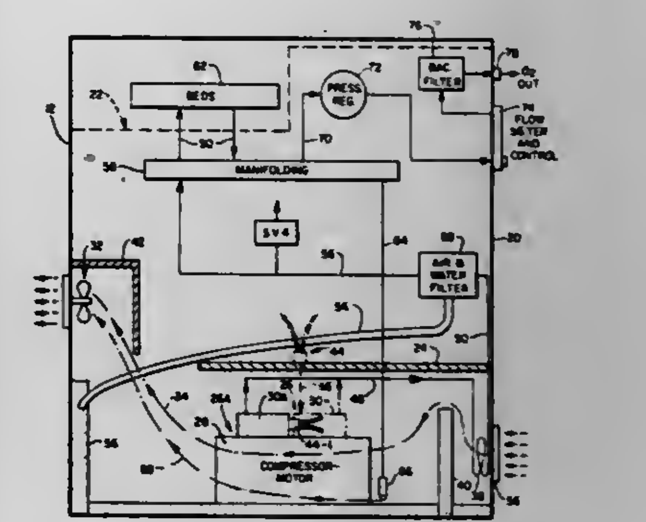

1. A compact housing for a PSA device for separating a gas from a mixture of gases comprising first wall means at least partially defining a first space within the housing, second wall means dividing the remaining space in said housing into a second and a third space, enclosed vessel means to contain the adsorbent bed means of said PSA device, said second and third spaces being located one vertically below the other, means to mount said vessel means in said first space to substantially completely fill said first space, means to mount the motor and compressor of said PSA device in said second space, and means to mount substantially all of the remaining internal components of said PSA device in said third space.

84. A PSA machine comprising at least one adsorbent bed, a closed vessel housing each such bed, said vessel comprising a predetermined length of imperforate rectilinear cross-section pipe as its body, means to close the ends of said length of pipe, adsorbent bed material substantially completely filling said vessel, means to permit the flow of gas through said end closing means, whereby a plurality of said vessels may be arranged in closely spaced relation to each other to thereby permit said machine to be contained in a compact housing, said vessel comprising a pair of substantially equal lengths of said pipe, means to join said pair together longitudinally side-by-side and to permit gas flow communication between said pipes at one end of the joined together pair, one of said gas flow permitting means in each of the end closing means at the other ends of the joined together pair, whereby the functional length of the adsorbent bed in said vessel is substantially equal to twice the length of one of said pipes and the physical length of said vessel is substantially equal to the length of one of said pipes, said means to join and permit gas flow comprising a pan-like member at said one end of said pair with the ends of said pair terminating short of the base of said pan-like member, whereby gas flow communication can be had between said one end of said pair through the space defined by said pan-like member.

4,302,225

HAND VACUUM CLEANER

Manfred Eckart, Wuppertal, and Peter Wulf, Ennepetal, both of Fed. Rep. of Germany, assignors to Vorwerk & Co. Interholding GmbH, Wuppertal, Fed. Rep. of Germany

Continuation of Ser. No. 7,410, Jan. 29, 1979, abandoned. This application Jun. 6, 1980, Ser. No. 157,639

Claims priority, application Fed. Rep. of Germany, Feb. 2, 1978, 2805393

Int. Cl.³ B01D *47/02*; A47L *5/24*

U.S. Cl. 55—234 **13 Claims**

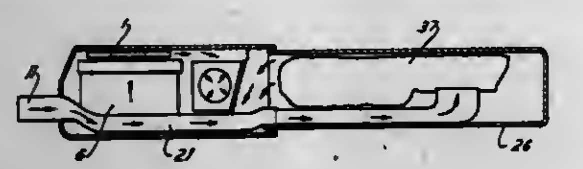

1. A vacuum cleaner, comprising an elongated housing including a first housing portion and a second housing portion connected thereto; said first housing portion defining a first chamber having an inlet to admit contaminated air thereto, and an outlet to discharge cleaned air therefrom, and an intermediate plate positioned within said first housing portion and extending from one end of said first chamber to another end thereof, said second housing portion defining a second chamber; a dust filter located in said second chamber and operative for filtering the contaminated air admitted into said housing, said intermediate plate being formed with a first recess; a motor-blower unit located in said first recess and having a blower and motor operative for aspirating the contaminated air received through said inlet and directing the same toward said dust filter; a first passage means formed on said intermediate plate and forming therewith a first passage being connected to said inlet and constructed and arranged for guiding the contaminated air in a first direction from said inlet toward said dust filter; and a second passage means formed on said intermediate plate and forming therewith a second passage arranged in communication with said dust filter and constructed and arranged for guiding the filtered air in a second direction opposite to the first direction, from said dust filter toward said motor-blower unit which urges the filtered air from said dust filter toward said outlet and said first and second passage means are constructed and arranged such that said first and second passages are formed as separate air aspirating and air discharging passages.

4,302,226

APPARATUS FOR NEUTRALIZING ODORS

Harold J. Rafson, Highland Park, Ill., and Egbert deVries, Kettering, Ohio, assignors to Quad Environmental Technologies Corp., Highland Park, Ill.

Continuation of Ser. No. 955,341, Oct. 27, 1978, abandoned. This application Dec. 14, 1979, Ser. No. 103,321

Int. Cl.³ B01D *47/06*

U.S. Cl. 55—238 **11 Claims**

1. Gas treatment apparatus consisting essentially of a closed cylindrical vessel;

gas entry means disposed in an upper portion of said vessel, said entry means arranged to cause gas to tangentially enter the vessel;

a columnar duct with an unobstructed interior area having gas exit means in a lower portion disposed coaxially within said vessel and extending continuously from the vessel floor to the vessel roof, said duct fixedly attached to both said floor and said roof to form a structural support for said vessel and to define an annular area between said duct and the vessel wall, said area providing an unobstructed passage for gas flow from said gas entry to said gas exit;

a plurality of nozzles disposed in an upper portion of said vessel, said nozzles adapted to inject a very finely divided liquid spray having a median droplet diameter less than about 10 microns into only said annular area formed by the vessel wall and the columnar duct, and

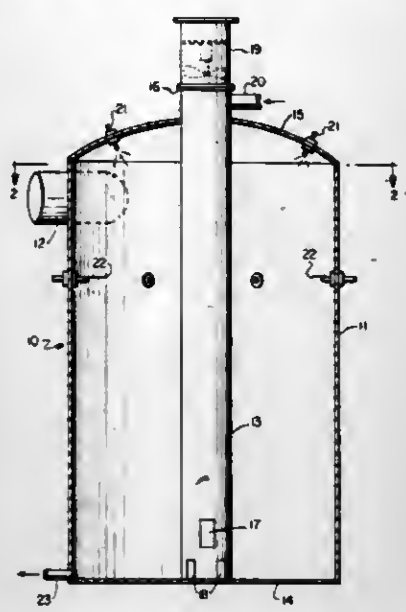

liquid exit means communicating between the floor of said annular area and the exterior of said vessel.

4,302,227

BAFFLED MOISTURE SEPARATOR

Edward H. Miller, Rexford, N.Y., assignor to General Electric Company, Schenectady, N.Y.

Filed May 27, 1980, Ser. No. 153,670

Int. Cl.³ B01D *50/00*

U.S. Cl. 55—269 **6 Claims**

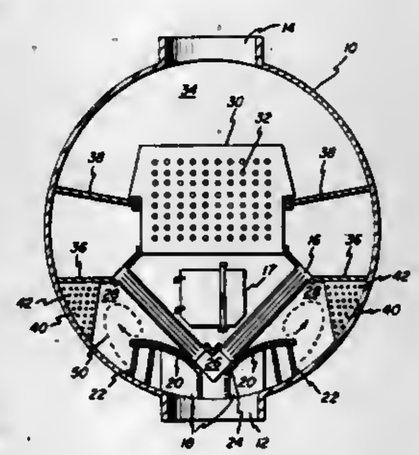

1. A moisture separator for removing moisture from steam flowing therethrough comprising:

a horizontal substantially cylindrical, pressure-tight vessel having at least one steam inlet opening at the bottom thereof, and at least one steam outlet opening at the top thereof;

a pair of banks of inertial moisture separator elements disposed within said vessel;

structure defining means for directing the flow of steam between said at least one inlet opening and said at least one outlet opening through said inertial moisture separator elements;

an impingement baffle opposed from said steam inlet within said vessel for promoting a first vortical flow pattern in steam entering said inertial moisture separator, said first flow pattern having a vortical axis substantially parallel to the longitudinal axis of said vessel; and

a plurality of spaced-apart baffle means affixed to the inside of said vessel substantially perpendicular to the longitudinal axis thereof for inhibiting a second vortical flow pattern in steam entering said inertial moisture separator, said second flow pattern having a vortical axis substantially transverse to the longitudinal axis of said vessel.

4,302,228

HEADER PIPE ATTACHMENT

Kent E. Ritter, Wellsville, N.Y., assignor to The Air Preheater Company, Inc., Wellsville, N.Y.

Filed Oct. 15, 1980, Ser. No. 197,303

Int. Cl.³ B01D *46/04*

U.S. Cl. 55—302 **4 Claims**

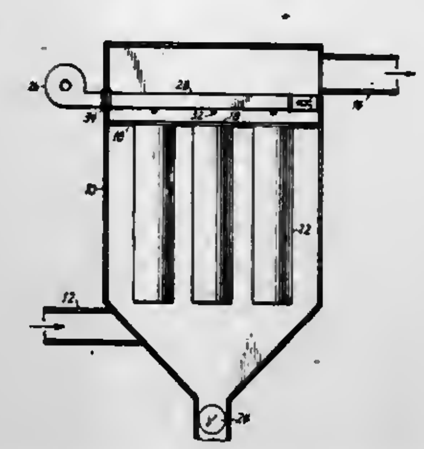

1. Bag filter apparatus having walls defining a filter compartment with an inlet for gas to be filtered and an outlet for the exhaust of clean gas therefrom, a tube sheet having a series of apertures therein lying between inlet and outlet driving the housing into inlet and outlet chambers, an open ended filter bag depending from each aperture of the tube sheet, cleaning means for said bag filters comprising a source of compressed air, a header pipe having an inboard end thereof carried by the housing adapted to receive compressed air from said source, an outboard end of the header extending into the outlet chamber of said housing parallel to the tube sheet and ending in spaced relation with a wall of said apparatus, said header pipe having openings therein that exhaust compressed air into the open ends of aligned filter bags, closure means at the outboard end of the header pipe adapted to preclude flow therethrough, support means carried by the housing adapted to limit expansion of said header to a longitudinal direction comprising a guide plate having a solid end fixed to the end of the header pipe and an end with an axially disposed slot extending outward therefrom into spaced relation with the housing wall, and means carried by the wall of the housing adapted to slidably abut the slot in the end of the guide plate to permit longitudinal movement therebetween.

4,302,229

CONTROL OF A FRACTIONAL DISTILLATION COLUMN

John E. Anderson, Corpus Christi, Tex., assignor to Phillips Petroleum Company, Bartlesville, Okla.

Division of Ser. No. 70,543, Aug. 29, 1979, Pat. No. 4,238,212. This application Jul. 2, 1980, Ser. No. 165,465

Int. Cl.³ B01D *3/42*

U.S. Cl. 62—21 **19 Claims**

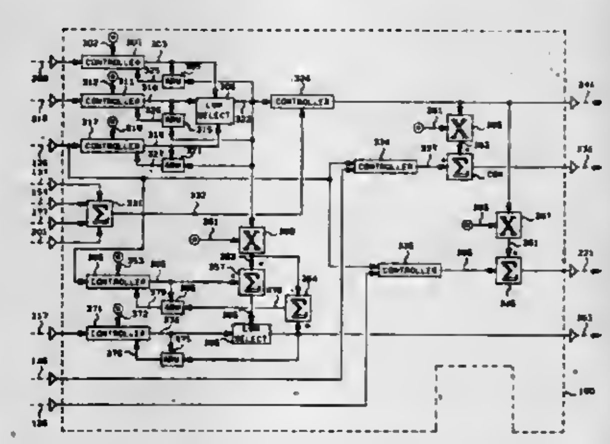

13. A method for preventing flooding of a fractional distillation column means and for maintaining the liquid level in first and second separator means, from which the feed to said fractional distillation column means is supplied, within desired limits comprising the steps of:

supplying a first feed stream to said first separator means;

supplying the vapor portion of said first feed stream from said first separator means to said second separator means;

supplying the liquid portion of said first feed stream as a second feed stream from said first separator means to said fractional distillation column means;

supplying the liquid in said second separator means as a third feed stream to said fractional distillation column means;

establishing a first signal representative of the predicted desired total feed flow to said fractional distillational column means required to prevent flooding of said fractional distillation column means;

establishing a second signal representative of the flow rate of said second feed stream;

establishing a third signal representative of the flow rate of said third feed stream;

using computing means to sum said second signal and said third signal to establish a fourth signal representative of the actual total feed flow rate to said fractional distillation column means;

using computing means to compare said first signal and said fourth signal and establish a fifth signal responsive to the difference between said first signal and said fourth signal;

manipulating the flow rate of said second feed stream in response to said fifth signal;

establishing a sixth signal representative of the actual liquid level in said first separator means;

establishing a seventh signal representative of the actual liquid level in said second separator means;

using computing means to compare said sixth signal and said seventh signal and establish an eighth signal responsive to the difference between said sixth signal and said seventh signal;

using computing means to combine said fifth signal and said eighth signal to establish a ninth signal;

manipulating the flow rate of said third feed stream in response to said ninth signal;

establishing a tenth signal representative of the predicted desired flow rate of said first feed stream required to prevent flooding of said fractional distillational column means;

establishing an eleventh signal representative of a correction factor utilized to maintain the liquid level in said first and second separators within desired limits;

using computing means to combine said tenth signal and said eleventh signal to establish a twelfth signal representative of a modified predicted desired flow rate of said first feed stream required to both prevent flooding of said fractional distillation column means and maintain the liquid level in said first separator means and said second separator means within desired limits;

establishing a thirteenth signal representative of the actual flow rate of said first feed stream;

using computing means to compare said twelfth signal and said thirteenth signal and establish a fourteenth signal responsive to the difference between said twelfth signal and said thirteenth signal; and

manipulating the flow rate of said first feed stream in response to said fourteenth signal.

4,302,230

HIGH RATE OPTICAL FIBER FABRICATION PROCESS USING THERMOPHORETICALLY ENHANCED PARTICLE DEPOSITION

John B. MacChesney, Lebanon; Jay R. Simpson, Fanwood, and Kenneth L. Walker, Florham Park, all of N.J., assignors to Bell Telephone Laboratories, Incorporated, Murray Hill, N.J.

Filed Apr. 25, 1980, Ser. No. 143,845

Int. Cl.³ C03B *37/07, 37/075*

U.S. Cl. 65—3.12 12 Claims

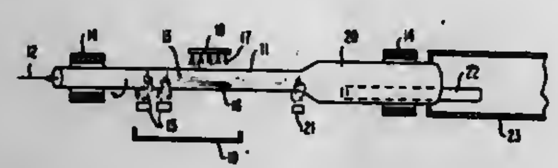

1. A method of fabricating optical fibers comprising:

a. forming glass precursor particulate material;

b. depositing the glass precursor particulate material on an appropriate substrate while heating the substrate to yield an optical fiber preform; and

c. drawing the optical fiber perform into an optical fiber;

the invention characterized in that

the particulate material is thermophoretically directed from regions of higher temperature to regions of lower temperature utilizing liquid cooling means to cool portions of the heated substrate.

4,302,231

METHOD OF PRODUCING A GLASS ARTICLE HAVING A GRADED REFRACTIVE INDEX PROFILE OF A PARABOLIC NATURE

Pedro B. Macedo, 6100 Highboro, Bethesda, Md. 20024; Joseph H. Simmons, Bethesda, Md., and Shigeo Murai, Kyoto, Japan, assignors to Pedro Manoel Buarque De Macedo, Bethesda and Theodore Aaron Litovitz, Silver Spring, both of, Md.

Filed Jan. 29, 1979, Ser. No. 7,192

Int. Cl.³ C03B *37/025, 37/075;* C03C *21/00*

U.S. Cl. 65—3.15 16 Claims

1. A method of producing a glass article having a graded refractive index profile of a near parabolic nature, comprising:

(a) soaking a preform having a porous matrix with interconnected pores in a stuffing solution containing at least one index modifying dopant of predetermined solubility in the stuffing solution for a time interval to fill the pores with the dopant solution;

(b) precipitating the dopant into the porous matrix approximately uniformly throughout;

(c) soaking the preform into a solvent solution having a solubility for the dopant lower than said predetermined solubility of the dopant in the stuffing solution for a time interval sufficient to cause substantially all of the dopant to redissolve and for diffusion to take place out of the porous matrix in such a way that the dopant concentration decreases as a function of radial distance from the central axis;

(d) precipitating the dopant in the porous matrix by reducing the temperature of the preform to a level such that the dopant is precipitated out of solution;

(e) removing the solvent and where necessary decomposition products from the preform; and

(f) heating to consolidate the preform to produce a glass article having a graded refractive index profile of the parabolic nature.

4,302,232

PROCESS FOR THE PRODUCTION OF A GLASS FIBER LIGHT WAVEGUIDE

Hartmut Schneider, and Alfred Papp, both of Munich, Fed. Rep. of Germany, assignors to Siemens Aktiengesellschaft, Berlin & Munich, Fed. Rep. of Germany

Filed Feb. 6, 1980, Ser. No. 119,099

Claims priority, application Fed. Rep. of Germany, Feb. 28, 1979, 2907731

Int. Cl.³ C03B *37/00;* C03C *17/02*

U.S. Cl. 65—3.12 12 Claims

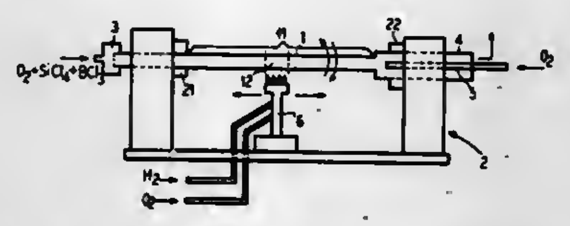

10. In a process for the production of glass fiber light waveguides, said process including a chemical vapor deposition process in which a glass layer is formed in a cycle including flowing a gas through a glass tube from one end to the other to deposit a glass forming substance on an inner surface of the tube and subsequently transforming the glass forming substance into a layer of glass, repeating the cycle to obtain the desired number of glass layers, subsequently forming the internally coated glass tube into a rod, and then drawing an optical fiber from an end of said rod, the improvements comprising during each cycle of depositing the glass forming substance and then transforming it into a glass layer, applying a gas pressure to the interior of the tube with the gas pressure being increased relative to the external environment of the tube.

4,302,233

METHOD FOR THE MANUFACTURE OF A HIGH-TENSILE-STRENGTH LIGHT WAVE-GUIDE

Hellmut Ahne, Röttenbach; Hubert Aulich, Munich; Friedrich Weidinger, Taufkirchen, and Roland Rubner, Röttenbach, all of Fed. Rep. of Germany, assignors to Siemens Aktiengesellschaft, Munich, Fed. Rep. of Germany

Filed Aug. 19, 1980, Ser. No. 179,471

Claims priority, application Fed. Rep. of Germany, Aug. 21, 1979, 2933856

Int. Cl.³ C03C *25/02*

U.S. Cl. 501—3.43 5 Claims

1. A method for the manufacture of a high tensile-strength light waveguide having a plastic layer thereon, comprising:

(a) forming an optical fiber by a fiber drawing process;

(b) immediately thereafter applying to said fiber, from a solution, a hardenable polymer precursor stage comprising an oligomeric and/or polymeric polyaddition or polycondensation product of

(1) a carbocyclic or heterocyclic compound carrying two groups selected from carboxyl, carboxylic acid chloride, amino and hydroxyl groups suitable for addition or condensation reaction; and

(2) a member selected from a diamine, a diisocyanate, a bis-acidchloride and a dicarboxylic acid,

said carbocyclic or heterocyclic compound having groupings selected from ester, amide, urethane and urea groupings partially in adjacent position to said groups suitable for addition or condensation reactions; and

(c) treating said fiber having said hardenable polymer precursor stage thereon by a method selected from irradiation with actinic light and thermal treatment to harden said polymer.

4,302,234

METHOD AND APPARATUS FOR FORMING MINERAL FIBERS

Larry J. Guffey, Heath, Ohio, and William W. Schultz, Evanston, Ill., assignors to Owens-Corning Fiberglass Corporation, Toledo, Ohio

Filed Jun. 26, 1980, Ser. No. 163,255

Int. Cl.³ C03B *37/04*

U.S. Cl. 65—14 6 Claims

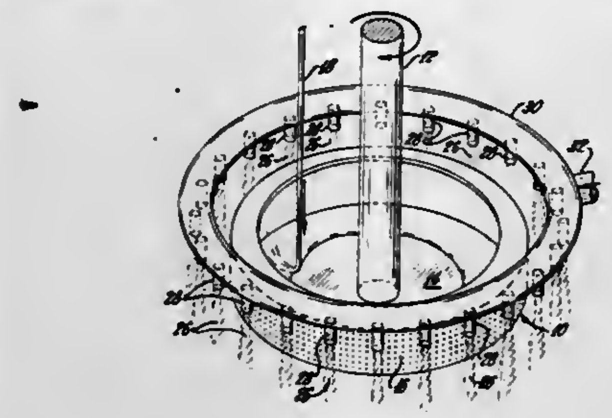

1. Apparatus of the type in which a spinner is adapted to centrifuge molten mineral material through the orificed spinner peripheral wall into primary fibers and a plurality of blowers is positioned circumferentially of said spinner to further attentuate said primary fibers into secondary fibers, the improvement being each of said blowers comprising a substantially cylindrical gas discharge conduit having means positioned therein to impart a swirling motion to gas discharged therefrom.

4,302,235

PRODUCING A MULTI-COLOR IMAGE IN POLYCHROMATIC GLASS

George A. Luers, Horseheads, N.Y., assignor to Corning Glass Works, Corning, N.Y.

Filed Mar. 10, 1980, Ser. No. 128,844

Int. Cl.³ C03B *25/00, 32/00;* C03C *3/22; 3/26*

U.S. Cl. 65—30.11 21 Claims

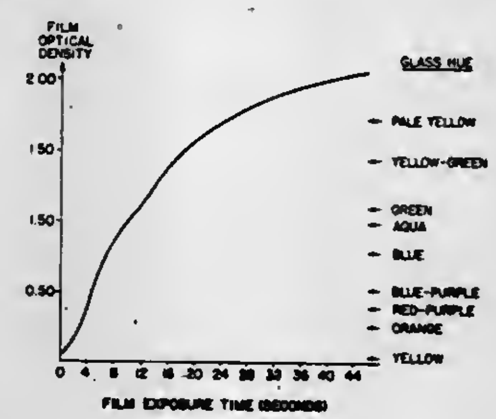

1. A method of producing an image of a subject embodying at least two distinct colors in a polychromatic glass containing an alkali fluoride and a silver halide selected from silver chloride, silver bromide and silver iodide, and being capable of integral and multiple coloration by metallic silver, wherein the glass is exposed to ultra-violet radiation at a temperature below the glass transformation range, the exposed glass is then heated to a temperature between the transformation range and the softening point of the glass to cause nucleation and growth of microcrystals of alkali fluoride in conjunction with silver halide, the glass is re-exposed to ultra-violet radiation and further heated to cause nuclei growth to impart color, the method being characterized by initially exposing the glass to ultraviolet radiation through a single, continuous tone, ultraviolet transmitting, film negative in which each of the colors in the original subject has been recorded in terms of a film density corresponding to that color in the developed glass, and wherein the areal definition of each density area corresponding to a color, and the physical relationship of these several areas in the film, correspond to the areal definition and relationship in the original subject, and the method being further characterized in that a continuous tone film negative is produced by exposure of the film to the original subject through the medium of filters which bring the film response and the polychromatic glass response into correspondence at least at the spectral points of interest.

15. A method of producing a mask for use in exposing polychromatic glass to develop an image of a multi-color subject therein, the method comprising recording each of the colors of the subject in a continuous tone film negative in terms of a unique, film density correlated to such color in the glass, the areal definition of each density in the film corresponding to the areal definition of the correlated color in the subject, and the several film densities being such that a latent image of the subject is reproduced in the glass by a single time exposure through the mask, and the method being further characterized in that each color is recorded in the continuous tone film by photographing the subject through a filter selected to bring that color in the subject into correspondence with that color in polychromatic glass.

4,302,236

COMPOSTING SYSTEM USED IN SCRUBBING GAS EFFLUVIA

Walter C. Roman, Worthington, Ohio, assignor to Ultimate Resources, Inc., Westerville, Ohio

Filed Feb. 20, 1980, Ser. No. 122,882

Int. Cl.³ C05F *9/04*

U.S. Cl. 71—9 11 Claims

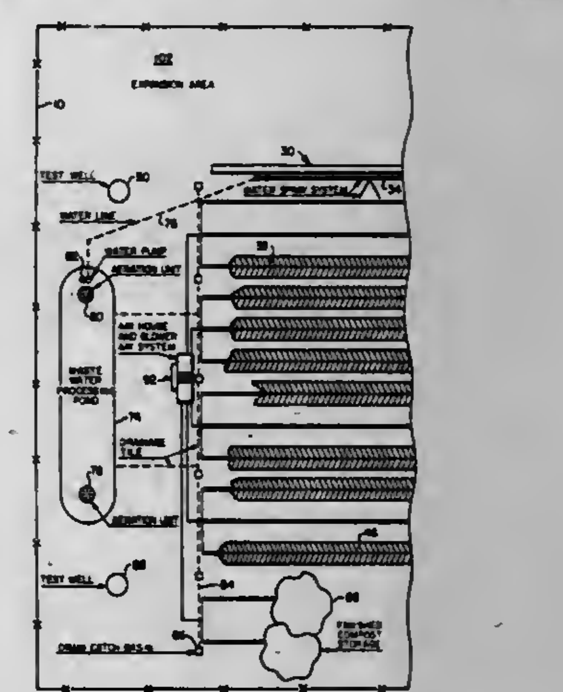

1. A method for removing an inorganic acid-forming moeity from a gas stream contaminated therewith, said moeity being or capable of forming an inorganic acid in the presence of molecular oxygen and water, and for producing a compost product from substantially non-digest biodegradable organic waste comprising municipal waste and industrial waste, which comprises:

a. admitting at least intermittently biodegradable organic waste into an active composting treatment site;

b. maintaining said waste under thermophilic bacteria-phase digestion conditions including adequate aeration and agitation, a water content by weight of between about 30% and 70%, and a temperature of between about 30° and 70° C., for a time adequate for said waste to be substantially digested;

c. passing said contaminated gas stream through said digesting waste while maintaining said digestion conditions, the

contact time therebetween being adequate for substantially removing said moeity from said gas stream;

d. venting a product gas stream substantially free of said moeity from said waste; and

e. removing at least intermittently said compost product from said site.

4,302,237

SULFUR PRODUCT AND METHOD

Donald C. Young, Fullerton, Calif., assignor to Union Oil Company of California, Los Angeles, Calif.

Continuation-in-part of Ser. No. 803,585, Jun. 6, 1977, abandoned. This application Dec. 26, 1978, Ser. No. 972,729

The portion of the term of this patent subsequent to Jan. 9, 1996, has been disclaimed.

Int. Cl.³ C05G *3/06*

U.S. Cl. 71—11 **9 Claims**

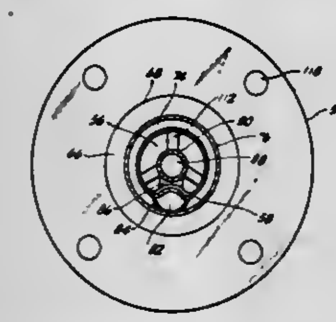

1. The method of producing a homogeneous hydrocarbon-sulfur fusion comprising a continuous rhombic sulfur matrix and at least 0.2 weight percent of a hydrocarbon, based on the combined weight of said sulfur and hydrocarbon, said hydrocarbon being uniformly dispersed within said sulfur matrix, said method including the steps of forming a homogeneous melt comprising at least 60 weight percent elemental sulfur based on the weight of said fusion and at least about 0.2 weight percent of said hydrocarbon, based on the combined weight of said sulfur and hydrocarbon, at a melt temperature of 120° to about 400° C., and solidifying said homogeneous melt to form said homogeneous fusion, said hydrocarbon being non-reactive with said sulfur at said melt temperature and having a melting point below said melt temperature and a boiling point above said melt temperature.

4,302,238

HERBICIDAL ISOXAZOLIDINE-3,5-DIONES

Marvin J. Konz, Lockport, N.Y., assignor to FMC Corporation, Philadelphia, Pa.

Continuation-in-part of Ser. No. 46,148, Jun. 6, 1979, abandoned. This application Aug. 20, 1980, Ser. No. 180,053

Int. Cl.³ A01N *43/80;* C07D *261/12*

U.S. Cl. 71—88 **21 Claims**

1. A compound of the formula

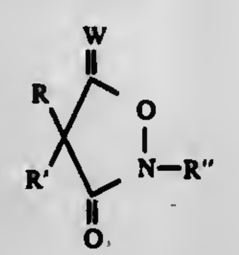

in which

R is methyl;

R' is methyl or ethyl;

W is oxygen or sulfur;

R" is —CH_2—Z; and

Z is phenyl substituted with fluorine, chlorine, or bromine in the 2-position, and which may be substituted with fluorine, chlorine, or bromine in the 4- or 5-position, or with methylenedioxy in the 4,5-position.

15. A method of controlling undesired plant growth which comprises applying to the locus to be protected an herbicidally effective amount of a compound of claim 1.

4,302,239

3-(5- OR 3-SUBSTITUTED-5- OR 3-ISOXAZOLYL)-1-ALLYL OR ALKYL-4-SUBSTITUTED-5-SUBSTITUTED OR UNSUBSTITUTED-2-IMIDAZOLIDINONES FOR CONTROLLING WEEDS

Jerome M. Lavanish, Akron, Ohio, assignor to PPG Industries, Inc., Pittsburgh, Pa.

Division of Ser. No. 122,633, Feb. 19, 1980. This application Jan. 15, 1981, Ser. No. 225,230

Int. Cl.³ A01N *43/62*

U.S. Cl. 71—88 **4 Claims**

1. A method of controlling weeds which comprises contacting the weeds with a herbicidally effective amount of a compound of Formula I:

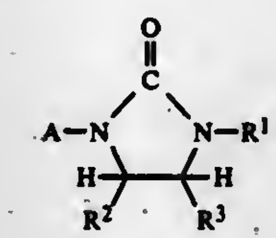

(I)

wherein:

A is

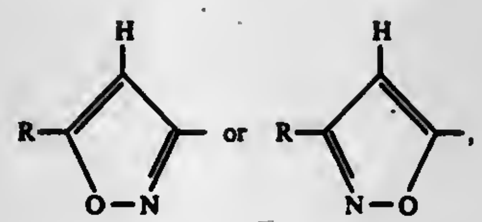

where

R is an alkyl of up to six carbon atoms,

an alkenyl of up to five carbon atoms,

an alkynyl of of up to five carbon atoms,

a cycloalkyl selected from the group consisting of cyclopropyl, cyclobutyl, cyclopentyl, and cyclohexyl,

a haloalkyl of up to six carbon atoms,

-R^4-O-R^5 or -R^4-S-R^5, where R^4 is an alkylene of up to six carbon atoms and R^5 is an alkyl of up to six carbon atoms, or

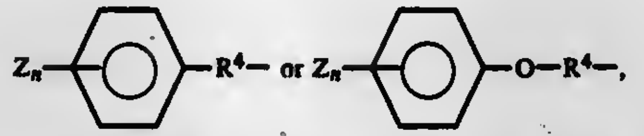

where Z is nitro (NO_2), chloro (Cl), bromo (Br), fluoro (F), or R^5, and n is 0, 1, 2, or 3;

R^1 is an alkyl of up to three carbon atoms or allyl;

R^2 is hydroxy (OH), chloro (Cl), or bromo (Br); and

R^3 is hydrogen (H), an alkyl of up to four carbon atoms, allyl, or hydroxy (OH).

4,302,240

ALKYL (MONO-, DI, TRI- AND TETRA-THIO)PHOSPHORYLATED ISOTHIAZOLIDIN-3-ONE 1-OXIDES AND 1,1-DIOXIDES

George A. Miller, Glenside, and Ernest D. Weiler, Ambler, both of Pa., assignors to Rohm and Haas Company, Philadelphia, Pa.

Division of Ser. No. 635,477, Nov. 26, 1975, abandoned. This application Dec. 3, 1979, Ser. No. 99,268

Int. Cl.³ C07D *275/02*

U.S. Cl. 71—090 **10 Claims**

1. A compound of the formula

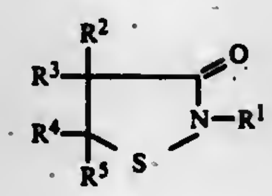

wherein

R^1 is hydrogen; (C_1–C_{18}) alkyl or (C_1–C_{18}) alkyl substituted with up to three substituents selected from the group consisting of hydroxy, halogen, carbalkoxy, cyano and carboxy; (C_3–C_6) cycloalkyl; phenylalkyl having up to 11 carbon atoms or phenylalkyl having up to 11 carbon atoms substituted with up to three substituents selected from the group consisting of halogen, (C_1–C_4) alkyl, (C_1–C_4) alkoxy, nitro and cyano; phenyl or naphthyl or phenyl or naphthyl substituted with up to three substituents selected from the group consisting of halogen, (C_1–C_4) alkyl, (C_1–C_4) alkyl, (C_1–C_4) alkoxy, nitro and cyano;

R^2 and R^5 are independently hydrogen, halogen or (C_1–C_6) alkyl;

one of R^3 and R^4 is independently hydrogen or (C_1–C_4) alkyl and the other is the group Z wherein Z is

$$R^6R^7\overset{X}{\overset{\|}{P}}-S$$

wherein R^6 and R^7 are independently (C_1–C_4) alkoxy or (C_1–C_4) alkylthio;

X is oxygen or sulfur; and n is the integer 1 or 2.

4,302,241

AGRICULTURAL SULFONAMIDES

George Levitt, Wilmington, Del., assignor to E. I. Du Pont de Nemours and Company, Wilmington, Del.

Continuation-in-part of Ser. No. 53,977, Jul. 2, 1979, abandoned. This application Nov. 30, 1979, Ser. No. 98,779

Int. Cl.³ A01N *43/54;* C07D *413/00, 239/02, 403/00*

U.S. Cl. 71—92 **19 Claims**

1. A compound selected from

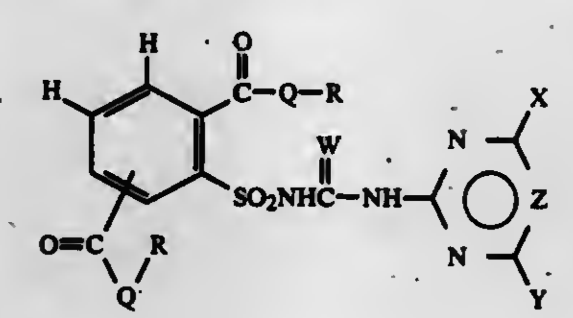

I

wherein

Q is O or

$$-\underset{R_1}{\underset{|}{N}}-;$$

W is O or S;

when Q is O, then R is C_1-C_4 alkyl, C_3-C_4 alkenyl, CH_2CH_2Cl or $CH_2CH_2OCH_3$;

when Q is

$$-\underset{R_1}{\underset{|}{N}}-,$$

then R is H, C_1-C_4 alkyl or C_3-C_4 alkenyl;

R_1 is H, C_1-C_4 alkyl, and R and R_1 can be taken together to form —$(CH_2)_4$, —$(CH_2)_5$—, and —CH_2CH_2O—CH_2CH_2—;

X is CH_3, CH_3O, CH_2CH_3O or Cl;

Y is CH_3, $CH_3O(CH_2)_{n'}$, where n' is 0, 1 or 2, CH_3CH_2O, or $R^2O_2CCHR^1O$ where R^1 is H or CH_3 and R^2 is H or C_1-C_3 alkyl;

Z is CH, or C—CH_3;

with the proviso that when Q is

$$-\underset{R_1}{\underset{|}{N}}-,$$

then the floating

$$-\overset{O}{\overset{\|}{C}}-\underset{R_1}{\underset{|}{N}}-R$$

must be in the 3 position.

4,302,242

HERBICIDAL MONO- OR DI-SUBSTITUTED-2-PYRIDINYLOXY-PHENOXY-LOWER-ALKANE-CARBAMATES

David Cartwright, Reading, England, assignor to Imperial Chemical Industries Limited, London, England

PCT No. PCT/GB79/00023, § 371 Date Oct. 15, 1979, § 102(e) Date Oct. 12, 1979, PCT Pub. No. WO79/00624, PCT Pub. Date Sep. 6, 1979

PCT Filed Feb. 5, 1979, Ser. No. 165,125

Claims priority, application United Kingdom, Feb. 15, 1978, 6042/78

Int. Cl.³ C07D *213/64;* A01N *43/40*

U.S. Cl. 71—94 **4 Claims**

1. A herbicidal pyridine compound of the formula (I):

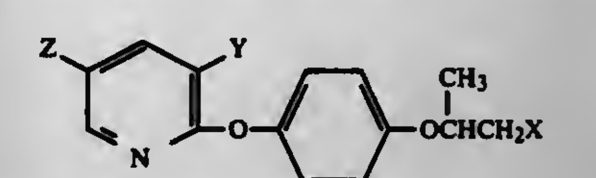

(I)

wherein Z is trifluoromethyl and Y is hydrogen or chlorine; and X is —OCONR^{2}R^3 wherein R^2 is hydrogen, C_{1-4} alkyl or phenyl and R^3 is C_{1-4} alkyl or phenyl.

2. A process of inhibiting the growth of unwanted plants, which comprises applying to the locus of the plants, before their emergence, a compound as claimed in claim 1, in a herbicidally effective amount.

4,302,243

PROCESS FOR PRODUCING TANTALUM CONCENTRATES

Akio Tamaru, and Minoru Kitsunai, both of Kitakyushu, Japan, assignors to Mitsubishi Chemical Industries, Ltd., Tokyo, Japan

Filed Jan. 11, 1980, Ser. No. 158,443

Claims priority, application Japan, Jun. 19, 1979, 54-77124

Int. Cl.³ C22B *3/00, 34/20*

U.S. Cl. 75—1 T **21 Claims**

1. A process for producing tantalum concentrates from an ore containing tantalum oxides, tantalic acid or salts thereof in combination with rutile-type titanium dioxide in mixed crystals, said process comprising:

(a) admixing said ore with a reagent consisting essentially of an aqueous solution of at least 50% by weight sulfuric acid;

(b) heating the admixture to a temperature within the range of from about 200° C. up to the boiling point of said reagent, with negligible dissolution of ore components;

(c) admixing the treated ore from step (b) with a reducing agent and an aqueous solution of sulfuric acid containing less than 50% by weight sulfuric acid to dissolve the titanium component while leaving the tantalum components in an insoluble state, thereby upgrading the tantalum content in the remaining ore concentrate solids.

4,302,244

STEEL CONVERSION METHOD

Walter Sieckman; Jai K. Pearce, and Eberhard G. Schempp, all of Pittsburgh, Pa., assignors to Pennsylvania Engineering Corporation, Pittsburgh, Pa.

Filed Jul. 18, 1980, Ser. No. 170,037

Int. Cl.³ C21C *5/32, 5/34*

U.S. Cl. 75—60 **13 Claims**

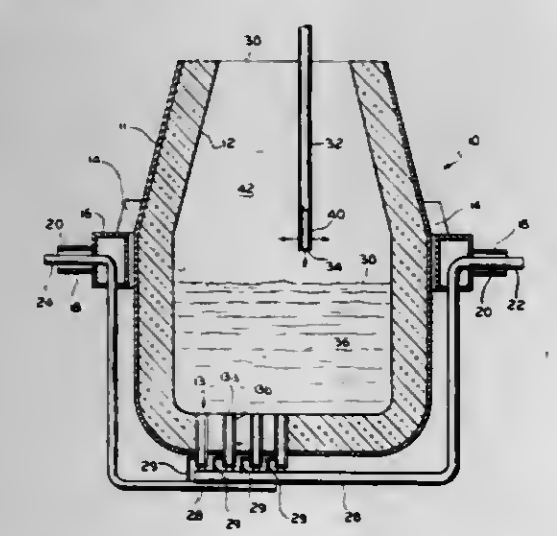

1. A method of converting ferrous metal contained in a vessel to steel comprising the steps of:

injecting a first quantity of oxygen into said metal and through one or more tuyeres beneath the surface thereof for oxidizing a first portion of the carbon in said metal,

injecting a hydrocarbon shielding fluid in surrounding relation to said oxygen,

simultaneously injecting a second quantity of oxygen into said metal from a top lance disposed above said metal and extending through a top opening in said vessel, said second quantity of oxygen oxidizing a second portion of the carbon in said metal,

continuing the injection of oxygen through said tuyeres and said lance until the level of carbon in said metal has been reduced to the desired limits.

4,302,245

METHOD FOR RECOVERING ZINC AND ZINC ALLOYS FROM AUTOMOBILE SCRAP

Frederic T. Winters, Palatine, Ill., assignor to American Can Company, Greenwich, Conn.

Filed Jun. 20, 1980, Ser. No. 161,291

Int. Cl.³ C22B *19/30;* B03C *1/00*

U.S. Cl. 75—86 **7 Claims**

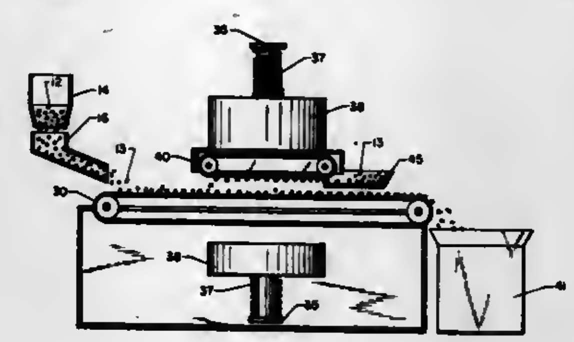

1. A method of separating and removing zinc particles coated with a relatively thin layer of magnetic material from a heterogeneous scrap mixture thereof with particles of non-magnetic materials, comprising the steps of:

supplying a heterogeneous mixture including said zinc particles coated with magnetic material, and said particles of non-magnetic materials onto a moving conveyor;

exposing said scrap mixture on said moving conveyor to a magnetic field of strength sufficient to separate the moving zinc particles coated with magnetic material from the moving particles of non-magnetic materials; and

removing the separated zinc particles into a collection zone separate from the remaining particles of non-magnetic materials of said mixture.

4,302,246

SOLUTION AND METHOD FOR SELECTIVELY STRIPPING ALLOYS CONTAINING NICKEL WITH GOLD, PHOSPHOROUS OR CHROMIUM FROM STAINLESS STEEL AND RELATED NICKEL BASE ALLOYS

Frank A. Brindisi, Jr., Madison; Thomas W. Bleeks, New Haven, and Thomas E. Sullivan, Hamden, all of Conn., assignors to Enthone, Incorporated, West Haven, Conn.

Filed Jan. 3, 1980, Ser. No. 109,248

Int. Cl.³ C23F *1/00;* C22B *7/00*

U.S. Cl. 75—101 R **22 Claims**

1. An improved solution for selectively stripping an alloy containing nickel with gold, phosphorous or chromium from substrates formed from alloys containing iron with chromium alone or with nickel, or nickel rich, chromium bearing alloys, said solution comprising:

(a) concentrated nitric acid;

(b) chloride ions from at least one chloride salt; and

(c) an organic corrosion inhibitor effective to inhibit degradation of said substrate by said solution.

16. An improved method for selectively stripping brazing or coating alloy containing nickel with gold, phosphorous or chromium from substrates formed from alloys containing iron with chromium alone or with nickel, or nickel rich, chromium bearing alloys, comprising application by immersion or spraying of the improved solution of claim 1 to said substrate, at a temperature ranging from about 70° to 130° F., for between 2 to 24 hours, until said brazing or coating alloy is removed from said substrate.

4,302,247

HIGH STRENGTH AUSTENITIC STAINLESS STEEL HAVING GOOD CORROSION RESISTANCE

Ryouichi Abe, Akashi; Masao Sato, Minoo, and Seiji Kikuma, Kobe, all of Japan, assignors to Kobe Steel, Ltd., Kobe, Japan

Filed Jan. 22, 1980, Ser. No. 114,387

Claims priority, application Japan, Jan. 23, 1979, 54-6681

Int. Cl.³ C22C *30/00, 38/44*

U.S. Cl. 75—122 **6 Claims**

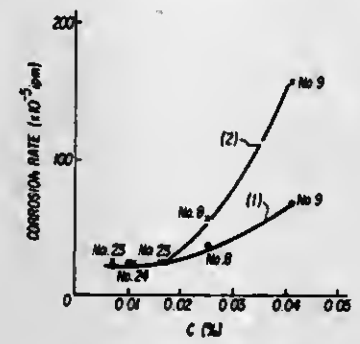

1. A high strength austenitic stainless steel having good corrosion resistance and, in particular, good hydrogen embrittlement resistance, consisting essentially of:

carbon	up to 0.02% by weight
silicon	up to 0.7% by weight
manganese	about 2.4 to 6.5% by weight
nickel	17.5 to 30.0% by weight
chromium	23.0 to 35.0% by weight
molybdenum	1.5 to 5.5% by weight
nitrogen	0.15 to 0.45% by weight
vanadium	0 to 0.6% by weight

the balance iron and inevitable impurities.

4,302,248

HIGH MANGANESE NON-MAGNETIC STEEL WITH EXCELLENT WELDABILITY AND MACHINABILITY

Yutaka Kasamatsu, Kobe; Senri Ishioka; Makoto Yamaga, both of Kakogawa; Hiromichi Hirano, Kobe, and Hitoshi Ihara, Kakogawa, all of Japan, assignors to Kobe Steel, Limited, Kobe, Japan

Filed Jun. 27, 1979, Ser. No. 52,591

Claims priority, application Japan, Jul. 4, 1978, 53-81623

Int. Cl.³ F16H *27/02*

U.S. Cl. 75—128 A **3 Claims**

1. A high-manganese, non-magnetic steel possessing excellent weldability and machinability consisting essentially of the following elements (% by weight):

carbon	0.55–0.80
silicon	0.1–1.2
manganese	10.0–14.5
nickel	0.3–3.0
chromium	0.5–3.6
nitrogen	0.01–0.2

balance iron and inevitable impurities.

4,302,249

METHOD FOR PROCESSING WASTES RESULTING FROM PRODUCTION OF PHOSPHORUS NAMELY, SLIME AND OFF-GASES, WITH UTILIZATION OF THE RESULTANT PRODUCTS

Vasily B. Chernogorenko, ulitsa Ezhena Potie, 11, kv. 86, Kiev; Tleubai M. Alzhanov, ulitsa Poltoratskaya, 18a, kv. 4, Chimkent; Kima A. Lynchak, ulitsa Kaunasskaya, 4, kv. 55; Simon V. Muchnik, Yaroslavov val, 17, kv. 12, both of Kiev; Evgeny S. Ishkhanov, ulitsa Dzhangildina, 8, kv. 22; Vladimir Y. Sergienko, ulitsa Gagarina, 84, kv. 5, both of Chimkent; Vladimir G. Sapian, ulitsa Dekabristov, 37, kv. 30, Vasilkov Kievskoiblasti; Vladimir M. Koverya, ulitsa Bocharova, 8b, kv. 114, Zaporozhie; Mendel E. Pobortsev, ulitsa Vodopyanova, 7, kv. 1, Chimkent; Evgeny A. Markovsky, ulitsa Semashko, 21, kv. 58, Kiev; Valentina V. Dmitrenko, ulitsa 40 let Sovetskoi Ukrainy, 2, kv. 186, Zaporozhie; Vladimir I. Bykov, ulitsa Zaitseva, 22, kv. 83, Leningrad; Alexandr D. Kipchakbaev, ulitsa Uritskogo, 186, kv. 33, and Alexandr N. Vopilov, ulitsa Uritskogo, 219, kv. 34, both of Chimkent, all of U.S.S.R.

Division of Ser. No. 898,973, Apr. 21, 1978, Pat. No. 4,192,853. This application Jan. 3, 1980, Ser. No. 109,297

Int. Cl.³ C22C *21/14*

U.S. Cl. 75—143 **2 Claims**

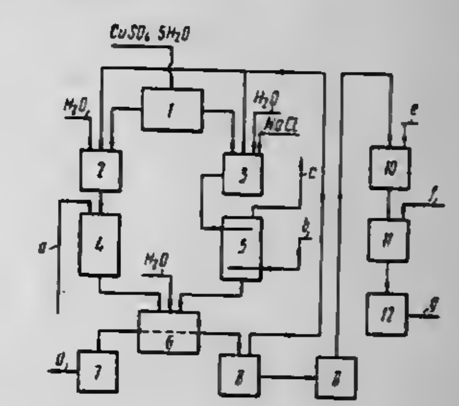

1. Method of modifying and refining hypereutectic silumines, which comprises melting a hypereutectic silumine at a temperature between about 820°–900° C. and adding thereto the solid product obtained by treating slime wastes or off-gases from the production of phosphorus with an aqueous solution of copper sulphate and separating the resulting solid product from the liquid product, said solid product containing mainly copper phosphide, chlorides and fluorides of alkali metals and silicon, and silicates of calcium and aluminum, whereby the copper phosphide reacts with the aluminum to form AlP seeds which serve as crystallization centers for silicon grains while the chlorides and fluorides of alkali metals and silicon are decomposed by the aluminum to form the corresponding aluminum and silicon fluorides and chlorides which evolve from the melt while the corresponding alkali metal fluorides and chlorides and silicon remain in the melt, the remaining components of said solid product surfacing from the melt as a slag, and recovering the thus modified and refined silumine.

4,302,250

GLASS ENVELOPES FOR TUNGSTEN-HALOGEN LAMPS

Paul S. Danielson, Corning, N.Y., assignor to Corning Glass Works, Corning, N.Y.

Filed Sep. 8, 1980, Ser. No. 184,764

Int. Cl.³ C03C *3/04, 3/10*

U.S. Cl. 501—70 **2 Claims**

1. A glass composition suitable as an envelope for a tungsten-halogen lamp and for sealing to molybdenum metal, said glass exhibiting a strain point higher than 750° C., a coefficient of thermal expansion (0°–300° C.) between $42\text{–}44\times10^{31}$ 7/°C., a liquidus temperature below 1300° C., a viscosity at the liquidus of at least 40,000 poises, a viscosity of less than 1000 poises at temperatures no higher than 1520° C., and consisting essentially, expressed in terms of weight percent on the oxide basis,

of 64–68% SiO_2, 11–14% CaO, 16.5–18.5% Al_2O_3, and 3–6.5% SrO+BaO, consisting of 0–4% SrO and 0–5% BaO, those latter two components being present in a molar ratio SrO:BaO ranging from 2:1–1:2.

4,302,251
CEMENT COMPOSITION CONTAINING DEXTRIN
Hideyuki Udagawa, Kawasaki; Tetsuya Ando, Tokyo, and Iwao Kibayashi, Machida, all of Japan, assignors to Denki Kagaku Kogyo Kabushiki Kaisha, Tokyo, Japan
Filed Nov. 26, 1979, Ser. No. 97,465
Claims priority, application Japan, Nov. 29, 1978, 53/146451; Nov. 29, 1978, 53/146452; Nov. 29, 1978, 53/146453
Int. Cl.³ C04B *7/352*
U.S. Cl. 106—92 **12 Claims**

1. A cement composition for suppressing temperature rise due to heat of hydration, comprising
a cement,
0.1 to 2.5% by weight, based on the weight of said cement, of a dextrin having a cold-water solubility of from 10 to 80% by weight, and
0.02 to 1% by weight, based on the weight of said cement, of a surface active agent selected from the group consisting of water reducing agents, air entraining water reducing agents, and air entraining agents and mixtures thereof.

4,302,252
SOLVENT SYSTEM FOR CELLULOSE
Albin F. Turbak, Convent Station; Adel El-Kafrawy, Rockaway; Fred W. Snyder, Jr., Wharton, and Andrew B. Auerbach, Livingston, all of N.J., assignors to International Telephone and Telegraph Corp., New York, N.Y.
Continuation-in-part of Ser. No. 60,814, Jul. 25, 1979, abandoned. This application Apr. 30, 1980, Ser. No. 145,333
Int. Cl.³ C08L *1/00*
U.S. Cl. 106—163 R **24 Claims**

1. A process of dissolving cellulose comprising
mixing activated cellulose at a temperature at which no significant degradation occurs with an amide selected from the group consisting of dimethylacetamide, 1-methyl-2-pyrrolidinone and mixtures thereof and from 3 to 12% by weight of the solution of lithium chloride and
dissolving said cellulose without significant degradation thereof in said amide and lithium chloride in the substantial absence of any polar medium other than the amide.

4,302,253
THICKENERS FOR ACID CLEANING COMPOSITIONS
Peter A. Ciullo, Naugatuck, Conn., assignor to R. T. Vanderbilt Company, Inc., Norwalk, Conn.
Filed Feb. 19, 1980, Ser. No. 122,393
Int. Cl.³ C08L *5/100*
U.S. Cl. 106—208 **9 Claims**

1. A synergistic thickening composition comprising (a) swellable smectite clay, (b) xanthan gum and (c) imidazolines of the structural formula

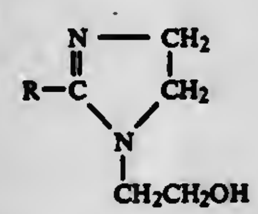

wherein R represents C_{7-17}-alkyl radical derived from fatty acids and the ratio of the smectite to xanthan gum is about 9:1 to about 1:1 and the ratio of the smectite to the imidazoline about 9:1 to about 1:2.

2. A method of thickening acid cleaning compositions the steps of which comprise:
(a) adding a dry blend of swellable smectite clay and xanthan gum to water;
(b) hydrating by mixing;
(c) adding imidazoline of the structural formula

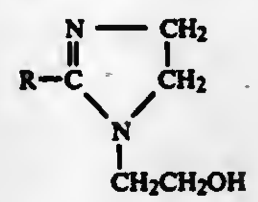

wherein R represents C_{7-17}-alkyl radical derived from fatty acids;
(d) dispersing the imidazoline under low shear conditions;
(e) blending in mineral acid to produce a viscous liquid.

4,302,254
PROCESS FOR THE MANUFACTURE OF PIGMENT PREPARATIONS
Josef Landler, Hofheim am Taunus, Fed. Rep. of Germany, assignor to Hoechst Aktiengesellschaft, Frankfurt am Main, Fed. Rep. of Germany
Continuation of Ser. No. 949,632, Oct. 10, 1978, abandoned. This application Mar. 17, 1980, Ser. No. 131,229
Claims priority, application Fed. Rep. of Germany, Oct. 11, 1977, 2745679
Int. Cl.³ C08K *5/00;* **C08L** *91/06, 91/08*
U.S. Cl. 106—272 **4 Claims**

1. A method of preparing a pigment composition having improved dispersibility, which comprises vigorously agitating an aqueous dispersion of a pigment precursor selected from the group consisting of the potassium hydroxide addition and sodium hydroxide addition compounds of naphthoylene-bis-benzimidazole, converting said pigment precursor to a pigment in said dispersion, mixing an organic solvent solution of a wax, the amount of wax being such that its weight in the pigment composition prepared is 5 to 10% of the weight of the dry pigment, with said dispersion before or during the formation of said pigment, thermally treating the waxed pigment particles in the dispersion at a temperature of from 40° to 140° C., isolating the waxed pigment from the dispersion, freeing the waxed pigment from adhering solvent and aqueous medium, and drying and grinding the waxed pigment.

4. A pigment preparation made by the method of claim 1.

4,302,255
SULFUR-BASED ADDUCT AND COMPOSITIONS CONTAINING THE ADDUCT
Louis E. Kidwell, Jr., and Dysart E. Holcomb, both of Shreveport, La., assignors to Pennzoil Company, Shreveport, La.
Filed Jan. 30, 1980, Ser. No. 116,863
Int. Cl.³ C08L *95/00*
U.S. Cl. 106—275 **32 Claims**

1. A sulfur-based adduct produced by (a) reacting at a temperature of about 100°–150° C., a composition comprising (1) about 10–90 wt.% of sulfur and (2) about 90–10 wt.% of a by-product hydrocarbon mixture comprising about 45–98 wt.% of aromatic, non-pseudodiene compounds, about 1–30 wt.% of diene and pseudodiene compounds, about 0–15 wt.% of other organic compounds that are substantially unreactive with sulfur and up to about 54 wt.% of unidentified compounds; whereby the sulfur reacts with each of the diene and pseudodiene compounds in said mixture; and (b) removing unreacted material from the reaction product.

4,302,256
METHOD OF IMPROVING MECHANICAL PROPERTIES OF ALLOY PARTS
Donald J. Kenton, Edmond, Okla., assignor to Chromalloy American Corporation, Midwest City, Okla.
Filed Nov. 16, 1979, Ser. No. 94,909
Int. Cl.³ C21D *1/78*
U.S. Cl. 148—4 **14 Claims**

1. A method of improving the mechanical properties of an age-hardenable alloy part characterized by the presence of such structural defects as cast micropores and/or grain boundary voids or microcracks formed during high temperature service, said alloy having a melting point of at least about 1000° C. which comprises,
subjecting said age-hardenable alloy part to HIP processing in an autoclave at superatmospheric pressure and at an elevated solution temperature of said age-hardenable alloy in excess of 50% of the absolute melting point of said alloy for a time at least sufficient to effect substantial removal of said structural defects by heat and densification,
heat treating said alloy part in situ by rapidly cooling it at a rate of over 20° C. per minute to below the age-hardening temperature range of said alloy while maintaining said part under superatmospheric isostatic pressure,
and then age-hardening said alloy following completion of said HIP processing,
whereby said part is improved in mechanical properties as compared to the same part heat treated by rapid cooling said alloy part outside of said autoclave and aging it following conventional HIP processing.

4,302,257
PROCESS FOR PRODUCING A GRAIN-ORIENTED SILICON STEEL SHEET
Fumio Matsumoto, Kitakyusyushi; Jirou Harase; Kunihide Takashima, both of Munakatamachi, and Hisanobu Nakayama, Nogatashi, all of Japan, assignors to Nippon Steel Corporation, Tokyo, Japan
Continuation of Ser. No. 19,894, Mar. 12, 1979, abandoned. This application Jul. 7, 1980, Ser. No. 166,112
Claims priority, application Japan, Mar. 11, 1978, 53-28107
Int. Cl.³ H01F *1/04*
U.S. Cl. 148—111 **5 Claims**

1. A process for producing a grain-oriented silicon steel sheet which comprises
continuously casting a silicon steel slab containing 2.0 to 4.0% by weight of silicon, up to 0.085% by weight of carbon, at least one conventional inhibitor, and unavoidable impurities,
heating the as cast slab to a temperature of at least 1300° C. to dissolve said inhibitors,
hot rolling the resultant heat-treated slab into a sheet, without any prior break-down step, said hot rolling comprising at least one recrystallization rolling, during finishing rolling, with a reduction rate of at least 30% per pass in a temperature range of from 960° to 1190° C., with the proviso that said inhibitors do not precipitate during said hot rolling, and
subjecting said sheet to annealing and cold rolling to produce a grain-oriented silicon steel sheet.

4,302,258
COMPOSITE PROPELLANT WITH 0.2μ OR SMALLER METAL FUEL
Daizo Fukuma, Sakado; Hisao Okamoto, Sayama; Sumio Okamoto, Sayama, and Takemasa Koreki, Sayama, all of Japan, assignors to Nissan Motor Company, Limited, Yokohama, Japan
Filed Nov. 2, 1979, Ser. No. 90,689
Claims priority, application Japan, Nov. 6, 1978, 53-136516
Int. Cl.³ C06B *45/10*
U.S. Cl. 149—19.1 **6 Claims**

1. A composite-type propellant comprising metal grains as an exothermic agent, an oxidizing agent, a fuel binder and a catalyst, wherein the average size of said metal grains is not more than 0.2μ, and is selected to provide a propellant slurry viscosity during manufacture not greater than about 30,000 poise.

4,302,259
MGH_2 AND $SR(NO_3)_2$ PYROTECHNIC COMPOSITION
Joseph R. Ward, Bel Air, Md., assignor to The United States of America as represented by the Secretary of the Army, Washington, D.C.
Filed Oct. 31, 1979, Ser. No. 89,832
Int. Cl.³ C06B *31/02*
U.S. Cl. 149—61 **2 Claims**

2. A pyrotechnic composition consisting essentially of about 70% by weight of magnesium hydride and about 30% by weight of strontium nitrate.

4,302,260
SIMULATED STAINED GLASS ARTICLE AND METHOD OF MAKING SAME
Joel Meitzer, 1440 Kelton Dr., Stone Mountain, Ga. 30083
Filed Jan. 26, 1979, Ser. No. 6,900
Int. Cl.³ B44F *1/06*
U.S. Cl. 156—63 **3 Claims**

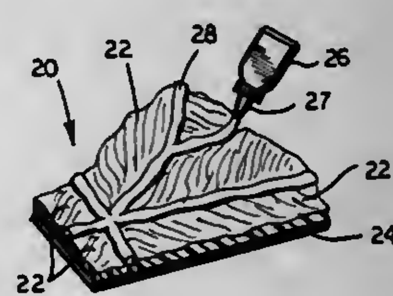

1. A method of making a simulated stained glass article comprising the steps of:
laying a transparent film of a first plastic over a master pattern on a flat surface;
placing a plurality of pieces of a second transparent or translucent plastic conforming to said pattern onto said film adjacent to one another, said second plastic being textured on the upper surface thereof and removably adhering to said film;
depositing an adhesive onto said textured upper surface of said pieces of said second plastic between and overlapping adjacent pieces to form a leaded effect, said adhesive permanently bonding to said second plastic and not bonding to said first plastic;
allowing said adhesive to set; and
removing said film from said pieces of said second plastic.

4,302,261
REINFORCED TUBULAR ARTICLES
Roy Simkins, Castle Vale, and James F. Yardley, near Burton-on-Trent, both of England, assignors to Dunlop Limited, London, England
Filed Jan. 24, 1980, Ser. No. 114,734
Claims priority, application United Kingdom, Jul. 19, 1978, 30421/78
Int. Cl.³ B65H *81/00*
U.S. Cl. 156—64 **13 Claims**

1. A method of producing a reinforced tubular article comprising helically winding a strip of reinforced polymeric material around a fixed mandrel such that successive turns are in contact with one another, by feeding said strip through the nip defined by a rotatable roller and said fixed mandrel to cause the strip to wind around the fixed mandrel by the action of the rotatable roller, the width of the nip being equal to the desired wall thickness of the tubular article; rotating the newly formed

tubular article about the mandrel by drive means positioned downstream from the mandrel; maintaining the newly formed

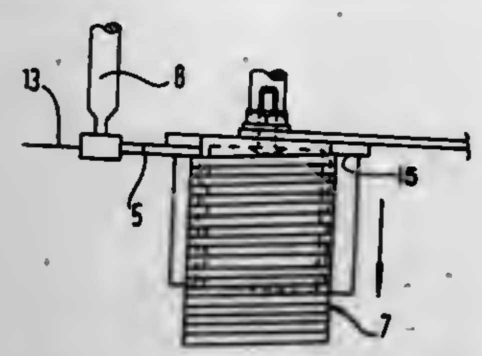

tubular article under a substantially uniform torque by sensing means connected to said drive means.

4,302,262
WEATHER SEALING STRIPS FOR DOORS AND WINDOWS
Francis X. Kay, The School House, Addington, Buckinghamshire, England
Filed Mar. 20, 1979, Ser. No. 22,614
Claims priority, application United Kingdom, Mar. 20, 1978, 10998/78
Int. Cl.³ B32B *3/06;* C09J *7/02;* E06B *7/16, 7/23*
U.S. Cl. 156—71 **33 Claims**

1. A door and window sealing weather strip for sealing an elongated gap between a door or window and its associated frame, said strip having no perforated tear line or crease along its length, comprising

(a) an attachement portion comprising an adhesive material extending along the length of the strip for securing the strip in position to a member located on one side of said gap to be sealed; and

(b) a flexible sealing lip portion extending along the length of said strip and capable of being deformed to be brought into, and retained in, sealing configuration in the gap in response to air flow in an unwanted direction into said gap, said lip portion having a width sufficient to extend across said gap and a thickness less than the width of said gap so as to prevent interference thereof with the opening or closing of the door or window and so that the sealing action of said lip portion is effected solely by the action of the air flowing in an unwanted direction, urging said lip portion into and across the gap and into sealing engagement with a member located on the opposite side of the gap.

31. A method of weather stripping door or windows and their associated frame so as to seal an elongated gap therebetween with a weather strip having no crease along its length and which comprises an attachment portion comprising an adhesive material extending along the length of the strip and a flexible sealing portion extending along the length of said strip and capable of being deformed to be brought into, and retained in, sealing configuration of said gap, comprising the steps of:

securing the attachment portion of said weather strip to a member along one side of said gap to be sealed so that said sealing portion extends into said gap, and providing said lip portion with a width sufficient to extend across said gap and a thickness less than the width of said gap so as to prevent interference thereof with the opening or closing of the door or window and so that the sealing action of said lip portion is effected soley by the action of the air flowing in an unwanted direction, urging said lip portion into and across the gap and into sealing engagement with a member located on the opposite side of the gap.

4,302,263
METHOD OF TREATING INTERLAYER MATERIAL
Dennis S. Postupack, Natrona Heights, Pa., assignor to PPG Industries, Inc., Pittsburgh, Pa.
Division of Ser. No. 887,563, Mar. 16, 1978, Pat. No. 4,244,997. This application Aug. 20, 1979, Ser. No. 68,303
The portion of the term of this patent subsequent to Feb. 6, 1995, has been disclaimed.
Int. Cl.³ C03C *27/00;* B05D *1/04*
U.S. Cl. 156—100 **13 Claims**

1. A method of fabricating a maximum number of individual sheets of substantially uniform thickness of trapezoidal shape of a flexible material of plastic composition suitable for use as an interlayer for laminated windows having a graded coating along an upper portion thereof from a continuous ribbon of clear, flexible interlayer material of plastic composition having a substantially uniform thickness comprising:

(1) cutting successive portions of said continuous ribbon of clear, flexible interlayer material into a number of interfitting sheets of trapezoidal shape while supporting each said successive portion of said continuous ribbon in such a manner as to avoid wrinkling and differential stretching thereof during its cutting from said ribbon,

(2) orienting each of said sheets of trapezoidal shape so formed into a predetermined orientation and positioning each said sheet in turn while at said predetermined orientation in a predetermined position with respect to apparatus to apply a coating composition along a preselected longitudinal portion only of said sheet of trapezoidal shape,

(3) applying a coating of graded intensity along said longitudinal portion only of said sheet of trapezoidal shape in such a manner that the intensity of said coating decreases transversely of the length of said longitudinal edge portion away from the longitudinal edge of said sheet,

and

(4) continuing to support said sheet of trapezoidal shape in such a manner as to avoid wrinkling and differential stretching thereof during said coating applying step, whereby each said coated sheet of trapezoidal shape with a coating of graded intensity so produced has a substantially uniform thickness and is smooth and has a substantially uniform stress throughout its entire extent.

4,302,264
METHOD FOR PRETREATING GLASS CORDS WHICH MINIMIZES CORD BLOWS
James J. Devitt, Suffield, Ohio, assignor to The General Tire & Rubber Company, Akron, Ohio
Continuation of Ser. No. 795,258, May 9, 1977, abandoned, which is a continuation of Ser. No. 366,902, Jun. 4, 1973, abandoned. This application May 13, 1980, Ser. No. 150,111
Int. Cl.³ B29H *17/28, 9/02*
U.S. Cl. 156—110 A **1 Claim**

1. In a method of making a glass-cord-reinforced rubber tire free of cord blows which includes the steps of treating the glass cords with a dip which improves its adhesion to the rubber and constitutes from about 18% to about 30% by weight of the treated glass cords on a dry basis, calendering the glass cords with a rubber compound, then incorporating the calendered glass cords into an uncured rubber tire, then curing the tire, the

improvement consisting essentially of the step, prior to the calendering of:

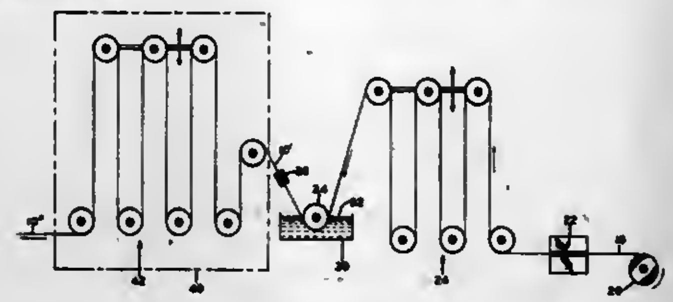

applying to the impregnated glass cords an effective amount to reduce cord blows of a cure accelerator for the rubber.

4,302,265
PROCESS OF MANUFACTURING TIRES FOR VEHICLE WHEELS
Jean-Pierre Cesar, Sayat, and Andre Schneider, St. Hyppolyte, both of France, assignors to Compagnie Generale des Etablissements Michelin, Clermont-Ferrand, France
Filed Aug. 6, 1980, Ser. No. 175,899
Claims priority, application France, Aug. 13, 1979, 79 20755
Int. Cl.³ B29H *17/14;* B60C *9/18*
U.S. Cl. 156—117 **8 Claims**

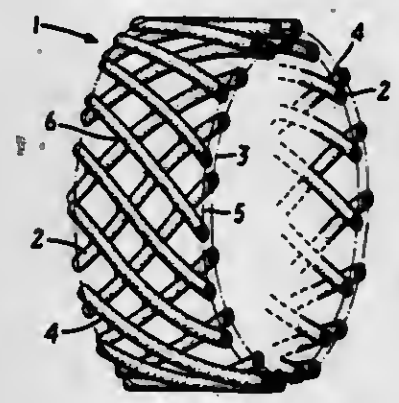

1. A process of manufacturing a tire using a carcass expandable into toroidal shape with two sidewalls joined to each other by an equatorial connecting element or portion, each sidewall being terminated by a bead, and a crown reinforcement placed around said carcass and formed of at least two plies of reinforcing elements which are parallel in each ply and crossed from one ply to the next forming acute angles with the circumferential direction of the tire, characterized by the fact that as the crown reinforcement there is used at least one annular net which is continuous in the circumferential direction of the tire and elastically deformable so that in deformed state its developed length is equal to the developed length of the equatorial connecting element or portion of the carcass, this net being formed of two superimposed plies of continuous segments of wires of the same length parallel in each ply and crossed from one ply to the other at an angle at most equal to 90° with respect to the circumferential direction of the tire, at least the outside of the wires being formed of an elastic and weldable material permitting welding of the wires of one ply to those of the other ply at the points where they intersect.

4,302,266
METHOD FOR MAKING HIGH PRESSURE HOSE
Thomas A. Kutnyak, Greenwood, S.C., assignor to Automation Industries, Inc., Greenwich, Conn.
Division of Ser. No. 76,929, Sep. 20, 1979, Pat. No. 4,259,991, which is a continuation of Ser. No. 673,643, Apr. 5, 1976, abandoned. This application Aug. 4, 1980, Ser. No. 174,818
Int. Cl.³ B29D *23/00;* F16L *11/04*
U.S. Cl. 156—149 **3 Claims**

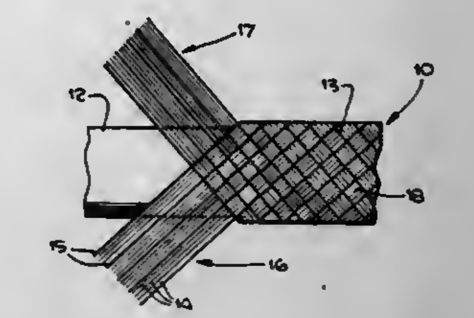

1. A method for forming a hose comprising the steps of:
extruding a polymeric material in an unsolidified state;
forming said extruded polymeric material into a continuous round unsolidified liner tube;
applying air pressure to the interior of said tube, thereby inflating said liner tube;
applying a liquid bonding ply completely around the exterior surface of said liner tube;
applying a braided cover comprising a plurality of interwoven groups of strands, each disposed at a bias angle from about 40° to 55° with respect to the longitudinal axis of said liner tube, each group of strands comprising a plurality of non-metallic fibers and a steel wire all in a side-by-side array, over said liner tube under tension, thereby embedding said cover into said bonding ply; and
solidifying said bonding ply to thereby fixedly embed said braided cover in said bonding ply.

4,302,267
OPTICAL FIBER MATING APPARATUS AND METHOD
John P. Palmer, Pomona, and Phillip B. Ward, Jr., Brea, both of Calif., assignors to General Dynamics, Pomona Division, Pomona, Calif.
Filed Feb. 20, 1980, Ser. No. 123,035
Int. Cl.³ B65H *9/00;* G02B *5/14*
U.S. Cl. 156—158 **36 Claims**

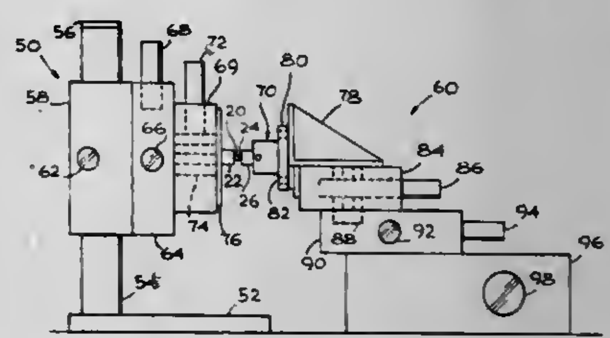

1. A method for longitudinally aligning plural elongate structures comprising;
providing structures with mounting faces thereon;
mounting a first structure on a universal joint having pivot axes in two orthogonal directions;
mounting the universal joint on a first stand which is adjustable in three orthogonal linear directions;
mounting a second structure on a second stand which is adjustable about at least one axis of rotation orthogonal to the two pivot axes;
adjusting at least the first stand to bring the faces of the structures into contact;

adjusting at least one of the stands to rotate at least one of the structures to align the axes thereof in a first plane; and
adjusting at least one of the stands to develop relative movement of the structures in a second plane generally othogonal to the first plane while allowing the universal joint to adjust the first structure to align the faces in a mating relationship.

22. An aligning apparatus for plural elongate structures comprising:
a first base;
means for positioning a first elongate structure on the base;
adjusting means interconnecting the base and the positioning means capable of rotating said elongate structure about a first axis;
a second base;
means for adjustably interconnecting a second elongate structure with the second base including means for moving the second structure into contact with the first structure; and
means for moving the elongate structures in relation to each other in a junction plane defined by the structures; the adjustable interconnecting means further including a universal joint fixture allowing rotation of the second structure about second and third axes, whereby when said elongate structures are brought into lateral contact with each other the fixture adjusts to produce planar contact between the structures.

4,302,268

PROCESS FOR PREPARING FLEXIBLE PRINTED-CIRCUIT BOARD

Shigeo Tachiki; Toshiaki Ishimaru, and Nobuyuki Hayashi, all of Hitachi, Japan, assignors to Hitachi Chemical Company, Ltd., Tokyo, Japan

Filed May 21, 1980, Ser. No. 151,986

Claims priority, application Japan, Jun. 26, 1979, 54/81215

Int. Cl.³ B32B *31/00;* B44C *1/22;* C23F *1/02*

U.S. Cl. 156—238 **3 Claims**

1. A process for preparing a flexible printed-circuit board which comprises the steps of:
(1) laminating a photoprintable, photosensitive layer which is supported on a polymer film support, to the surface of a flexible printed-circuit board with a conductor pattern,
(2) exposing the photoprintable, photosensitive layer imagewise to light either before or after removing the support from the layer;
(3) removing the unexposed areas of the photoprintable, photosensitive layer to leave an imaged polymer film as a cover layer on the surface of the flexible printed-circuit board.

4,302,269

PROCESS OF FORMING A FIBER REINFORCED, STAMPABLE THERMOPLASTIC LAMINATE

Albert H. Steinberg, Morris Plains, and Lowell G. Ward, Mendham, both of N.J., assignors to Allied Corporation, Morris Township, Morris County, N.J.

Filed Oct. 10, 1979, Ser. No. 83,448

Int. Cl.³ B29C *19/00; 27/02*

U.S. Cl. 156—243 **15 Claims**

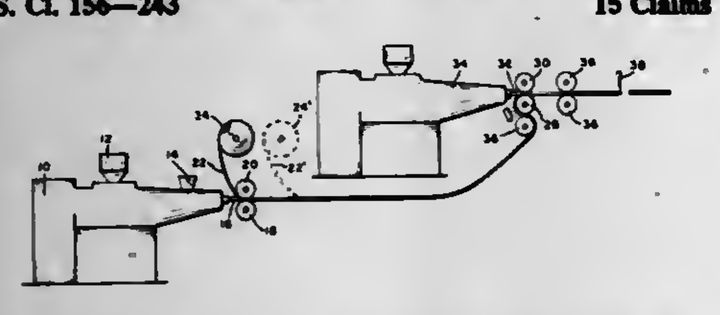

1. A continuous process of forming a nonsiliceous fiber reinforced, stampable thermoplastic laminate consisting essentially of:
(a) extruding a first sheet of thermoplastic resin containing about 5 to 35% by weight nonsiliceous fibers on an extruded basis;
(b) embedding a layer of nonsiliceous fibers into one side of said first sheet;
(c) extruding a second sheet of thermoplastic resin containing about 5 to 35% by weight of nonsiliceous fibers on an extruded basis; and
(d) laminating, in a lamination zone, said second sheet to said first sheet and said layer of nonsiliceous fibers without substantially impairing the integrity of or rearranging said nonsiliceous fibers of said first and second sheets, wherein said lamination zone comprises a set of three heated rolls, said first sheet and said layer of nonsiliceous fibers being in the form of a prelaminate and being passed serially around the first and second of said heated rolls and then between the second and third rolls, advancing said second sheet to the nip formed by the second and third rolls and onto said prelaminate and laminating said prelaminate and said second sheet between said second and third rolls, the lamination being conducted at a temperature ranging from the melting point of the resin to about 650° F.

4,302,270

METHOD OF BONDING AN ULTRAFILTRATION MEMBRANE ASSEMBLY

Robert D. Nicolet, Weston, Conn., assignor to Dorr-Oliver Incorporated, Stamford, Conn.

Division of Ser. No. 52,445, Jun. 26, 1979, Pat. No. 4,264,447. This application Dec. 4, 1980, Ser. No. 212,989

Int. Cl.³ B32B *31/20, 7/04;* B01D *39/16*

U.S. Cl. 156—290 **2 Claims**

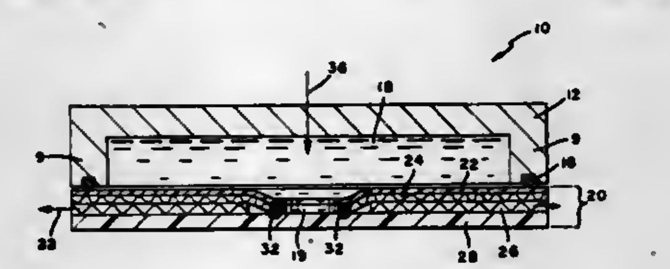

1. A process for making a composite ultrafiltration membrane assembly comprising the steps of:
(a) arranging a composite assembly for joining by superposing a coarse-fabric drainage mat on a polymer backing plate member having a relatively low polymer melt temperature, said drainage mat being positioned so as to leave selected edges of said backing plate member uncovered, superposing on said drainage mat a membrane element, said membrane element comprising a thin membrane having a relatively high polymer melt temperature mechanically joined to a porous polymer support member, the dimensions of said membrane element being such that the uncovered edge portions of the backing plate member are in contact with the porous support member of said membrane element, said porous support member of said membrane element having a relatively low polymer melt temperature,
(b) applying pressure to at least some edges of said composite assembly to bring said porous support member into intimate contact with said backing plate member at said edges and to compact and compress said membrane,
(c) heating said contacting edges through said membrane to develop in said porous support member and said backing plate member temperatures in excess of the polymer melt temperature of the aforesaid contacting members, but less than the polymer melt temperature of said membrane,
(d) maintaining said pressure and heat on said edges for a predetermined time whereby the contacting edges of said porous support member and said backing plate member fuse to form a sealed joint and the membrane is compacted.

4,302,271

COUNTERSINK NOZZLE FOR SEALANT APPLICATION

William G. Iajerd, Seattle, Wash., assignor to The Boeing Company, Seattle, Wash.

Filed Nov. 23, 1979, Ser. No. 96,858

Int. Cl.³ B29C *27/16*

U.S. Cl. 156—293 **4 Claims**

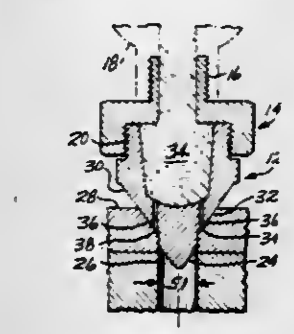

4. A method for applying sealant material to the countersunk portion only of a countersunk hole comprising the steps of:
inserting the pilot portion of a nozzle into the hole,
further pushing said nozzle into the hole until a cone surface portion of the nozzle is in mating relationship with the countersunk portion of the hole thereby limiting further travel of said pilot portion into said hole,
dispensing a sealant through a circumferential groove in said cone surface portion around the countersunk portion of the hole, and then
withdrawing said nozzle from the hole.

4,302,272

PROCESS FOR HEAT SEALING POLYURETHANE FOAM

Barry A. Phillips, Slovan; Keith G. Spitler, Bethel Park, both of Pa., and Richard E. Keegan, New Martinsville, W. Va., assignors to Mobay Chemical Corporation, Pittsburgh, Pa.

Continuation of Ser. No. 8,030, Jan. 31, 1979, abandoned. This application Jan. 14, 1980, Ser. No. 112,046

Int. Cl.³ B32B *31/20*

U.S. Cl. 156—309.9 **18 Claims**

1. A process for heat sealing flexible polyurethane foam to a substrate comprising:
A. reacting and foaming a flexible polyurethane foam produced by the steps comprising reacting:
(I) an organic polyisocyanate;
(II) a polyol having a molecular weight of 2,000 to 8,000 comprising the adduct obtained by sequentially reacting:
(a) a polyhydroxyl initiator, with a functionality of 2 to 5 and a weight average molecular weight as determined by gel permeation chromatography of from 50 to 200; with
(b) 10 to 90%, by weight based on the total oxide present in (b)+(c)+(d), a first alkylene oxide; and subsequently reacting the product with
(c) 10 to 80%, by weight, based on the total oxide present in (b)+(c)+(d), 4,4,4-trichloro-1,2-epoxybutane and/or epihalohydrin; and subsequently reacting the product with
(d) 10 to 60%, by weight, based on the total oxide present in (b)+(c)+(d), a second alkylene oxide;
(III) foaming agent; and optionally
(IV) catalyst;
B. allowing said resulting polyurethane foam to cure;
C. heating a portion of the surface of said flexible polyurethane foam of (B) above its melting or fusion point; and
D. contacting the melted or fused surface of said polyurethane flexible foam with a substrate whereby a flexible polyurethane foam/substrate laminate is formed; and
E. cooling said flexible polyurethane foam/substrate laminate below the melting or fusion point of said foam.

4,302,273

ETCHING TANK IN WHICH THE SOLUTION CIRCULATES BY CONVECTION

Thomas B. Howard, Jr., Mountaintop, Pa., assignor to RCA Corporation, New York, N.Y.

Filed Jun. 4, 1980, Ser. No. 156,889

Int. Cl.³ C23F *1/02*

U.S. Cl. 156—345 **6 Claims**

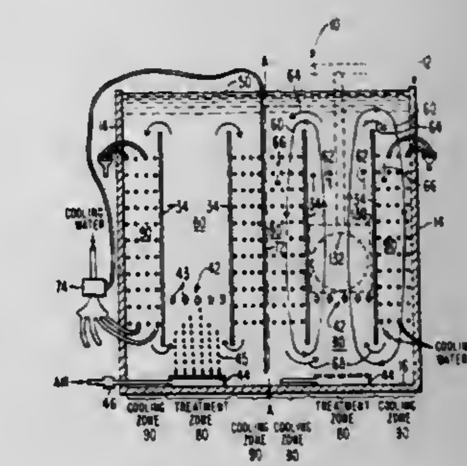

1. Apparatus for the treatment of parts in a solution with which the parts have an exothermic reaction, said apparatus comprising:
a tank having a bottom and side wall means having a bottom edge adjacent said bottom and a top edge spaced therefrom to define a volume in which the solution can be contained;
partition wall means in said tank, said partition wall means extending from adjacent said bottom to adjacent said top edge of said side wall means and surrounding a treatment zone in which the parts to be treated can be contained, said partition wall means being spaced from said side wall means and forming a heat transfer zone surrounding said treatment zone, communication means between said treatment zone and said heat transfer zone, said communication means being formed in said partition wall means adjacent said bottom and adjacent said top edge of said side wall means, whereby the heated solution in said treatment zone flows through said communication means adjacent said top edge of said side wall means to said heat transfer zone, and cooling means in said heat transfer zone for cooling the heated solution whereby the cooled solution flows through said communication means adjacent said bottom to said treatment zone.

4,302,274

TIRE BUILDING MACHINE

George E. Enders, Salem, Ohio, assignor to NRM Corporation, Akron, Ohio

Filed Feb. 19, 1980, Ser. No. 122,605

Int. Cl.³ B29H *17/24*

U.S. Cl. 156—401 **45 Claims**

1. In a tire building machine, a dual bladder mechanism comprising a radially stepped annular support having inner and outer steps, said support having therein inner and outer fluid ducts respectively radially underlying said inner and outer steps, inner and outer fully molded annular bladders mounted respectively on said inner and outer steps, and inner and outer fitting means for locating and securing respectively said inner

and outer bladders to their respective steps, at least one fitting means for each bladder extending into its respective fluid duct

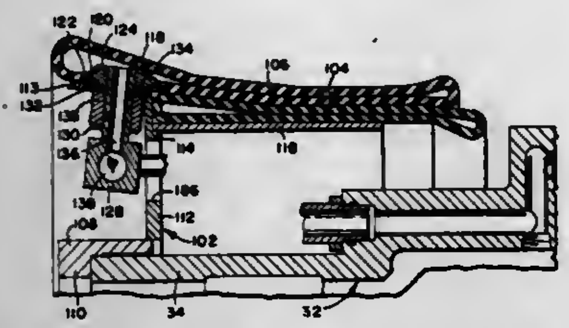

and having a fluid passage therein establishing fluid communication between said bladder and its respective fluid duct.

4,302,275
APPARATUS FOR FORMING TUBULAR PLASTIC SLEEVES FOR APPLICATION TO BOTTLES
Robert J. Burmeister, Toledo; Russell W. Heckman, Perrysburg; Robert C. Miller, Whitehouse, and George A. Nickey, Toledo, all of Ohio, assignors to Owens-Illinois, Inc., Toledo, Ohio
Filed Nov. 27, 1979, Ser. No. 97,762
Int. Cl.³ B65C *3/12*
U.S. Cl. 156—446 **16 Claims**

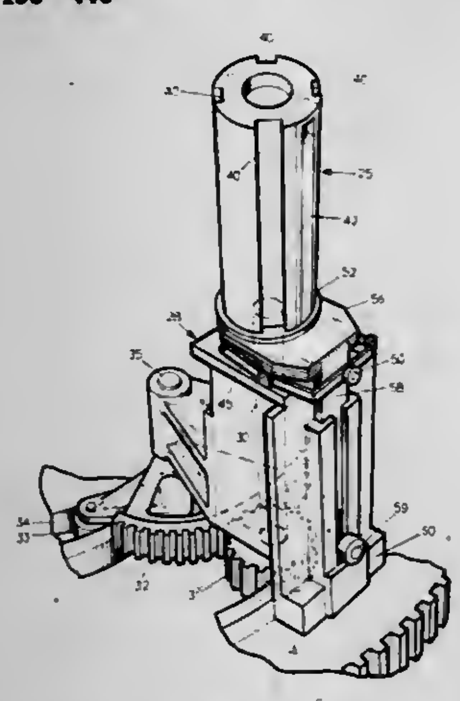

6. A mandrel mechanism for use on a rotary turret for forming lengths of sheet-like material into tubular sleeves comprising a mandrel having a substantially cylindrical peripheral surface and having a length greater than the length of said sheet-like material, a plurality of three or more substantially equi-spaced-apart spline-shaped grooves formed in the substantially cylindrical peripheral surface of said mandrel, a lineal strip of resilient material mounted axially substantially level with said substantially cylindrical peripheral surface of said mandrel, a plurality of vacuum applying ports located in lineal alignment on both sides of said resilient lineal strip adapted to retain both ends of an individual length of sheet-like material on said mandrel, an annular stripper ring member having a plurality of substantially equi-spaced-apart inwardly-facing complemental lug portions equal in number to the number of said spline-shaped grooves and adapted to fit within said spline-shaped grooves for slidable engagement with said mandrel, and an axial groove in said mandrel peripheral surface, an expansion member slidably mounted in said groove, at least one of said groove and expansion member being wedge-shaped whereby the circumferential dimension of said mandrel peripheral surface is expanded and contracted with axial movement of said expansion member along said groove, means biasing said expansion member in one axial direction in said groove, and means operative to move said expansion member in the opposite axial direction.

4,302,276
MACHINE FOR WELDING A MOVING WEB OF MATERIAL BY MEANS OF A MOVABLE WELDING TOOL
Ehrhart Schulze, Fellbach, Fed. Rep. of Germany, assignor to Karl Heinz Steigler, Stuttgart, Fed. Rep. of Germany
Filed May 28, 1980, Ser. No. 153,871
Claims priority, application Fed. Rep. of Germany, Jan. 6, 1979, 2922438
Int. Cl.³ B16H *3/00*
U.S. Cl. 156—553 **9 Claims**

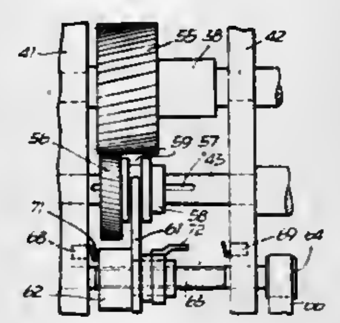

1. An apparatus for welding a web of material moving in its longitudinal direction comprising a movable welding tool which is adapted to press the web of material against the periphery of a rotatable counter-roller substantially along a contact line during welding, said apparatus further comprising a drive means for imparting a rotary movement to the counter-roller and simultaneously moving the welding tool periodically into its welding position in contact with the web of material, said drive means having a transmission means with an obliquely toothed engagement means for coupling said welding tool and said counter-roller, said engagement means adapted to be displaced within said transmission means by a displacement means for providing an additional rotation to the said counter-roller relative to said welding tool.

4,302,277
LABELING DEVICE, PREFERABLY FOR CASSETTES OR THE LIKE
Heino Ilsemann, Am Wehkamp 3, 2800 Bremen, Fed. Rep. of Germany
Filed Jun. 12, 1979, Ser. No. 47,805
Claims priority, application Fed. Rep. of Germany, Jun. 14, 1978, 2826035; Aug. 11, 1978, 2835211; Jan. 19, 1979, 2902050; Jan. 19, 1979, 2902104
Int. Cl.³ B65C *9/00*
U.S. Cl. 156—567 **21 Claims**

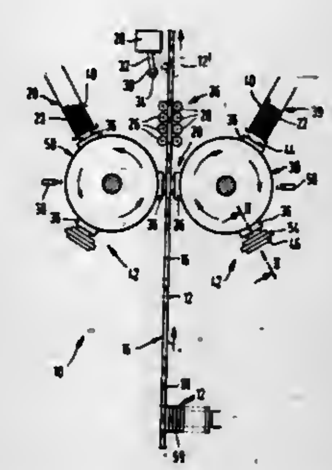

1. In a device for the labeling of tape cassettes, with a conveyor conveying the cassettes linearly on edge, with a supply magazine from which the cassettes are guided to the conveyor, and devices for application of the labels arranged opposite

each other on both sides of the conveyor, the improvement comprising:

each label application device having radially moving label holders (36) rotating rhythmically about a vertical axis, with vertical suction surfaces, and two pinheads (44) penetrating the suction surfaces, retractable against spring tension radially behind the suction surface, and adjusted to recesses of the cassette and perforations of the labels, a supply stacker (40), said pinheads being movable with respect to said supply stacker, an applicator stage (42) for adhesive liquid and depositor stages (20); the conveyor being constructed as a continuously rotating conveyor chain (16) having cams (18) for inserting the cassettes; and an elevating platform being arranged in the depositor stages (20) which lifts the cassettes via the cams (18) into the operating range of the label holders (36).

4,302,278
GaAs CRYSTAL SURFACE PASSIVATION METHOD
Ranjeet K. Pancholy, Irvine, and Rene Drouet, Placentia, both of Calif., assignors to Rockwell International Corporation, El Segundo, Calif.
Filed Jun. 16, 1980, Ser. No. 159,465
Int. Cl.³ C30B *33/00;* **H01L** *21/203, 21/316*
U.S. Cl. 156—610 **13 Claims**

1. A method of temporarily protecting a GaAs crystal wafer, which comprises heating the wafer in contact with thermally vaporized As_2O_3 in a substantially oxygen free closed vessel at a reaction temperature in excess of 450 degrees Centigrade and for a time sufficient to surface react said As_2O_3 with said wafer to form a passivation layer thereon of a first level of compositional and electrical uniformity; cooling said wafer below said reaction temperature; reheating the cooled wafer from a temperature lower than said reaction temperature to a temperature higher than said reaction temperature and in the presence of free oxygen, to improve layer compositional and electrical uniformity to a second higher level; and heating said wafer to a temperature sufficient to remove said thermal oxide surface passivation layer.

4,302,279
PROCESS FOR PRODUCING FERRITE SINGLE CRYSTAL FOR HIGH FREQUENCY
Michihiro Torii, Hamamatsu; Hirohito Goto, Gyoda, and Utsuo Kihara, Kosai, all of Japan, assignors to Fuji Electrochemical Co., Ltd., Tokyo, Japan
Filed Jul. 2, 1980, Ser. No. 165,287
Int. Cl.³ C30B *29/16*
U.S. Cl. 156—616 R **4 Claims**

1. A process for producing Ni-Mn-Zn ferrite single crystal for high frequency wherein a sample comprising 10–30 molar percent of NiO, 1.8–12 molar percent of MnO, 15–35 molar percent of ZnO and 49–53 molar percent of Fe_2O_3 is melted and subjected to growing into a crystal under an oxygen partial pressure of below about 100 Kg/cm^2.

4,302,280
GROWING GADOLINIUM GALLIUM GARNET WITH CALCIUM IONS
Frank J. Bruni, Charlotte, N.C., assignor to Texas Instruments Incorporated, Dallas, Tex.
Continuation of Ser. No. 960,536, Nov. 14, 1978, abandoned. This application Dec. 21, 1979, Ser. No. 106,321
Int. Cl.³ C30B *15/00*
U.S. Cl. 156—617 SP **4 Claims**

1. A method of growing monocrystalline gadolinium gallium garnet comprising the steps of:

providing a melt composition comprising gallium sesquioxide, gadolinium sesquioxide, and 100 to 10,000 ppm of calcium ions sufficient to maintain an adherent meniscus between said melt and said growing garnet,

contacting said melt with a seed crystal,

progressively separating said seed crystal from said melt maintaining an adherent meniscus of said melt in contact with said growing monocrystalline garnet, and

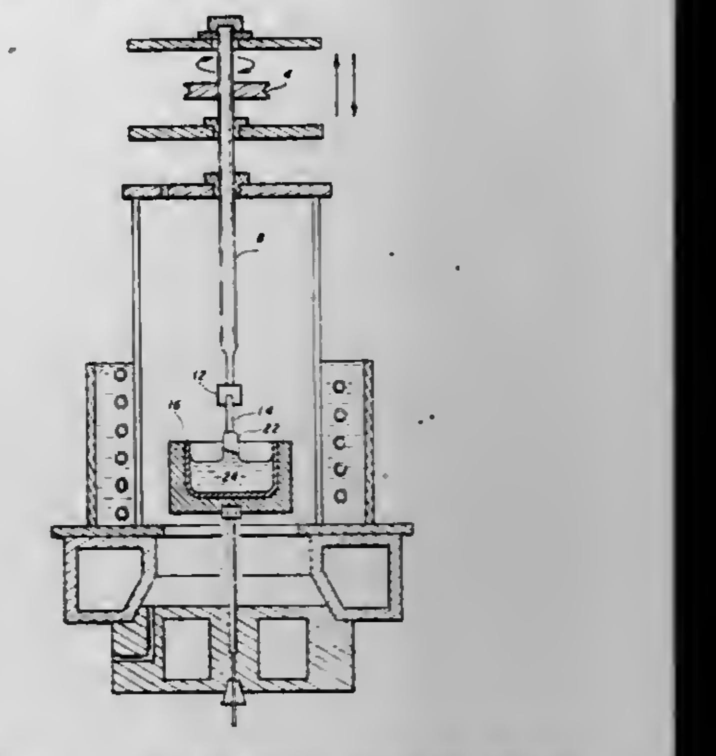

growing said monocrystalline garnet from said adherent meniscus.

4,302,281
METHOD FOR PRODUCING PULP
Rolf Ryham, Balsta, Sweden, assignor to AB Rosenblads Patenter, Stockholm, Sweden
Filed Aug. 28, 1979, Ser. No. 70,501
Claims priority, application Sweden, Aug. 30, 1978, 7809167
Int. Cl.³ D21C *11/04*
U.S. Cl. 162—30 K **4 Claims**

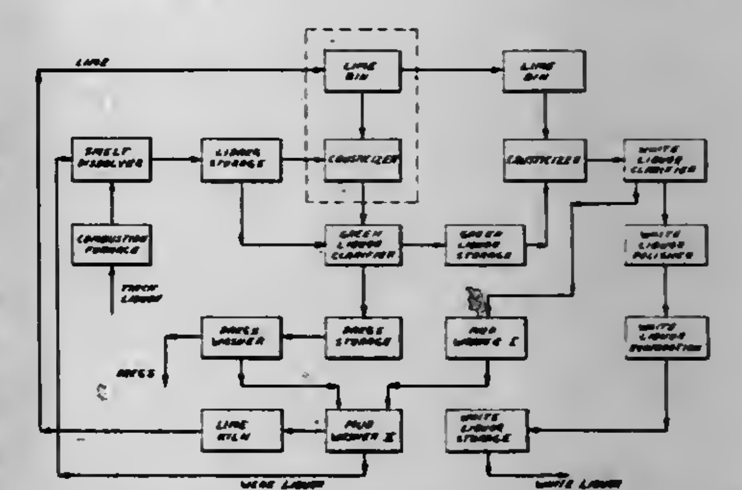

1. In the production of pulp, the method comprising the steps of cooking a cellulose-containing material with an alkaline cooking liquor which is white liquor, the used cooking liquor from said cooking step being black liquor, separating said black liquor from the pulp produced in said cooking step, concentrating said black liquor by evaporation to form a thick liquor, burning said thick liquor in a recovery furnace to form a smelt, dissolving said smelt in a weak liquor to form green liquor, and passing said green liquor to a causticizing operation for cleaning and conversion to white liquor used in said cooking step, said method being characterized by further steps for reducing the amount of ballast in said white liquor, said further steps comprising maintaining the concentration of said green liquor prior to said causticizing operation at a level of 110±20 grams per liter total titratable alkali counted as NaOH, maintaining the efficiency of said causticizing operation at 92±3%, and concentrating the white liquor, prior to said cooking step,

by evaporation to a content of 130–200 grams per liter effective alkali counted as NaOH.

4,302,282
METHOD OF AND APPARATUS FOR MAKING IMPRINTED PAPER
Terrill A. Young, Cincinnati, Ohio, assignor to The Procter & Gamble Company, Cincinnati, Ohio
Filed Jan. 29, 1980, Ser. No. 116,429
Int. Cl.[3] D21F *5/02*
U.S. Cl. 162—111 6 Claims

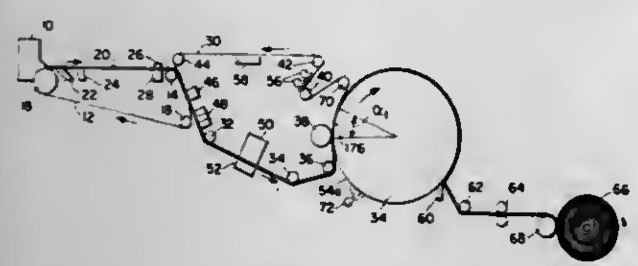

1. An improved apparatus for making creped, imprinted paper which apparatus is of the type wherein a web is wet formed on a forming means and then forwarded to a dryer-creping cylinder on an imprinting carrier fabric loop without subjecting the web to substantial compaction prior to reaching the dryer-creping cylinder, and in which apparatus a pressure roll is biased with substantial force towards the dryer-creping cylinder to form a relatively highly pressure biased compressive nip therebetween through which the web backed by the imprinting carrier fabric is forwarded onto the dryer-creping cylinder and adhered thereto with moisture and pressure responsive creping adhesive disposed thereon, said improvement comprising tension means for biasing a substantial length portion of said imprinting carrier fabric loop radially inwardly against a substantial arcuate sector of said dryer cylinder immediately adjacent and downstream from said nip so that a running portion of said web is disposed and relatively lightly compressively biased therebetween without said web being subjected to the compressive action of a second pressure biased nip, said tension means comprising a rotatably mounted turning roll, and means for maintaining a predetermined level of tension in said fabric loop, said turning roll being sufficiently spaced from said dryer cylinder to obviate there being a second pressure biased nip downstream from said nip through which said substantial length portion of said imprinting carrier fabric loop passes.

4,302,283
SIZING PROCESS AND COMPOSITION
Sidney M. Blitzer, Baton Rouge, La., and Harry D. Wilder, Midlothian, Va., assignors to Ethyl Corporation, Richmond, Va.
Continuation of Ser. No. 869,694, Jan. 16, 1978, abandoned, which is a continuation of Ser. No. 490,273, Jul. 22, 1974, abandoned. This application Sep. 2, 1980, Ser. No. 183,439
Int. Cl.[3] D21H *3/08*
U.S. Cl. 162—158 16 Claims

1. The method of sizing paper which comprises the step of intimately dispersing within the wet pulp prior to the ultimate conversion of said pulp into a dry web as a sizing agent an effective amount of a system of alum plus alkali metal salt of substituted dicarboxylic acid corresponding to the structural formula

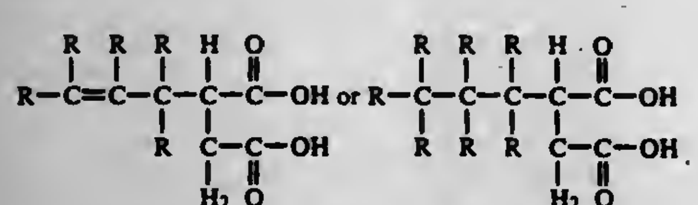

wherein R is hydrogen or alkyl, at least two R groups being alkyl, and the total number of carbon atoms in the salt is from 20 to about 30, and wherein the amount of alum is up to about 1.7% by weight on a dry fiber basis and in an amount sufficient to provide superior sizing properties in comparison with succinic acid salts of said formula wherein the total number of carbon atoms in R' is less than 16.

4,302,284
HELICAL FIELD STABILIZATION OF PLASMA DEVICES
Tihiro Ohkawa, La Jolla, Calif., assignor to General Atomic Company, San Diego, Calif.
Filed Jan. 29, 1979, Ser. No. 7,503
Int. Cl.[3] G21B *1/00*
U.S. Cl. 376—133 70 Claims

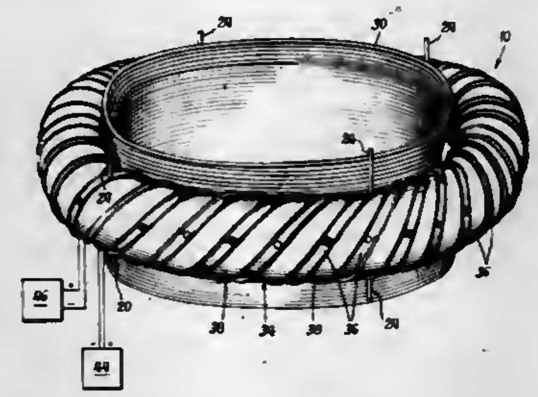

1. A toroidal plasma device comprising
a toroidal confinement vessel having walls for defining a toroidal space and confining gas therein,
means for generating magnetic flux linking said toroidal space to induce substantial toroidal plasma current therein, said toroidal plasma current producing a substantial poloidal magnetic field,
first and second windings wound substantially helically around said vessel with the same sense of twist at substantially the same pitch, said first windings and said second windings being disposed alternately and substantially equally spaced around the minor circumference of said vessel, and
means for passing first direct current through said first windings and second direct current through said second windings in the direction counter to said first direct current to generate a helical magnetic field acting in combination with said poloidal magnetic field to produce closed and nested magnetic flux surfaces spaced from said vessel walls, wherein a safety factor q within said plasma current is the sum of two components, one being axisymmetric and substantially proportional to the ratio of toroidal magnetic field to poloidal magnetic field, and the other being nonaxisymmetric and substantially helically symmetric and substantially the quantity

$$\frac{-b^2 r I_l'(kr)}{2B_{\theta,o}^2 R}\left(\frac{\partial B_{\theta,o}}{B_{\theta,o}\partial r}(r/l)\, I_l'(kr) + (l/kr)\, I_l(kr)\right)$$

where b is a measure of the strength of the magnetic field from said helical windings, R is the major radius of said toroidal space, r is the average minor radius of the magnetic flux surface, $B_{\theta,o}$ is the poloidal magnetic field produced by said toroidal plasma current,

$$\frac{\partial B_{\theta,o}}{\partial r}$$

is the partial derivative of $B_{\theta,o}$ with respect to r, l is the number of said first windings, k is the wavenumber of the magnetic field produced by said first and second windings, $I_l(kr)$ is the modified Bessel function of order l, and $I_l'(kr)$ is the derivative of $I_l(kr)$ with respect to its argument, q being defined as the average over a flux surface of the number of transits made around said toroidal space in the toroidal direction by a magnetic flux line in making a single transit in the poloidal direction, and the absolute magnitude of q being less than 1 within said plasma current.

4,302,285
NEUTRON ACTIVATION ANALYSIS INSTALLATION
Izmail M. Pronman, Leninsky prospekt, 64, kv. 361; Evgeny I. Antonov, 10 Sokolnicheskaya ulitsa, 21, kv. 23; Izrail Y. Barit, ulitsa D. Ulyanova, 3, kv. 96; Anatoly V. Andreev, 1 Naprudnaya ulitsa, 5, kv. 184, and Alexandr M. Kazantsev, ulitsa Dezhneva, 9, korpus 2, kv. 214, all of Moscow, U.S.S.R.
Filed Nov. 16, 1979, Ser. No. 95,058
Claims priority, application U.S.S.R., Feb. 19, 1979, 2728475; Nov. 23, 1979, 2684301
Int. Cl.[3] G21G *1/06*; G01T *1/00*
U.S. Cl. 376—159 4 Claims

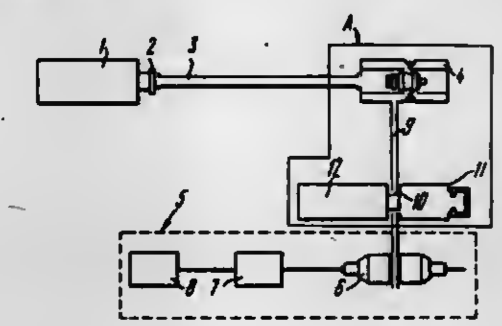

1. A neutron activation analysis installation comprising: a neutron generator, a target chamber of said neutron generator; a receiving and loading assembly; a transport means communicating said receiving and loading assembly with said target chamber; a test sample impurity concentration measuring unit; a through channel communicating said impurity concentration measuring unit with said receiving and loading assembly; a through lateral port in said channel; an irradiated sample surface layer removal unit located against said port on one side of said channel; an irradiated sample distribution assembly disposed against said port on the opposite side of said channel with respect to said surface layer removal unit; an air cylinder being the main part of said irradiated sample distribution assembly; a hollow rod in said air cylinder; a bar arranged along the axis of said hollow rod; a sample receiver rigidly fixed on the end of said bar; said bar disposed in a manner allowing its rotation about the longitudinal axis thereof and reciprocating motion through said port in said channel so that in one extreme position said bar does not reach said channel leaving it vacant, in the intermediate position of said bar said sample receiver is found in said channel blocking the latter and in the other extreme position of said bar said sample receiver passes through said port in said channel and gets into said surface layer removal unit.

4,302,286
REACTOR VESSEL IN-SERVICE INSPECTION ASSEMBLY AND ULTRASONIC CENTERING DEVICE
Bernard J. Lefebvre, and William H. Krueger, both of Pittsburgh, Pa., assignors to Westinghouse Electric Corp., Pittsburgh, Pa.
Filed Apr. 24, 1979, Ser. No. 32,799
Int. Cl.[3] G21C *17/00*
U.S. Cl. 376—249 19 Claims

1. An improved reactor vessel in-service inspection assembly having an inspection transducer positioning arm wherein the improvement comprises means for locating the positioning arm at a pre-established location within a hollow portion of the reactor vessel cavity wherein the locating means includes:
means affixed to the positioning arm for generating and simultaneously, radially, directing acoustic signals around the circumference of the hollow portion of the vessel cavity and receiving the signals reflected off of the cavity walls and redirected to the location from which the signals were originally, radially directed, at a position within the hollow portion wherein the generating and receiving means comprises an acoustic transducer and reflector

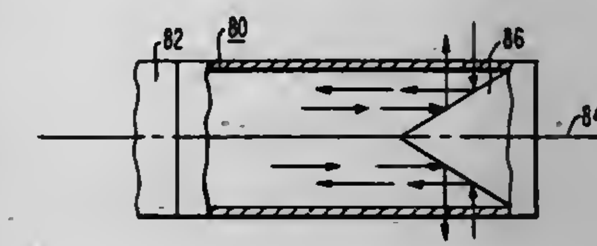

wherein the reflector is constructed to radially direct the acoustic signals generated by the transducer to the walls of the hollow portion of the reactor vessel cavity and redirect the acoustic energy reflected off the cavity walls back to the reflector to the transducer;
means for monitoring the received signals as a function of time; and
means for positioning the arm in response to the monitored difference in time of reception of the received signals, at the pre-established location within the hollow portion of the reactor vessel cavity.

4,302,287
NUCLEAR REACTOR OPERATION CONTROL PROCESS
Hiroshi Hayashi, Tokyo, Japan, assignor to Hitachi, Ltd., Tokyo, Japan
Filed Mar. 8, 1978, Ser. No. 884,571
Claims priority, application Japan, Mar. 9, 1977, 52-25795
Int. Cl.[3] G21C *9/00*
U.S. Cl. 376—217 11 Claims

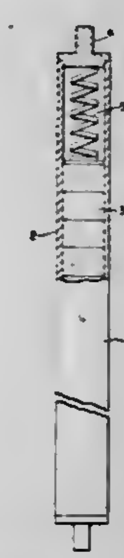

1. A method for controlling the operation of a nuclear reactor to at least initially increase the reactor power in a range in which pellet-clad-mechanical-interaction occurs comprising the steps of at least initially increasing the reactor power from a power level in which pellet-clad-mechanical-interaction begins to take place up to a predetermined power level for the nuclear reactor and controlling the rate of increase of the linear heat generating rate to a rate no less than 0.15 KW/ft/hr., and no greater than a predetermined critical rate so as to shorten the time necessary to at least initially raise the reactor power to the predetermined power level without causing pellet-clad-mechanical-interation damage of the fuel elements.

4,302,288
FLUID LEVEL CONTROL SYSTEM
Lamont H. Youngborg, San Jose, Calif., assignor to General Electric Company, San Jose, Calif.
Filed Oct. 23, 1978, Ser. No. 953,436
Int. Cl.^{3} G21C *7/00*
U.S. Cl. 376—210 **14 Claims**

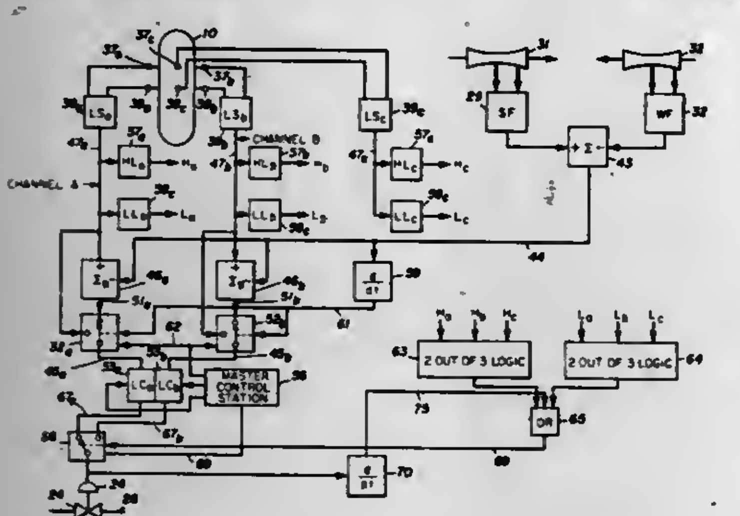

9. In a boiling water nuclear reactor with a nuclear full core submerged in water within a pressure vessel and having a steam outflow line for applying steam to a utilization device and a feedwater inflow line, including feedwater inflow rate control means therein, for injecting water into said vessel, a feedwater flow control system for maintaining the water level in said vessel between predetermined upper and lower limits comprising: first flow rate sensing means connected to said steam line providing a steam flow rate signal proportional to the steam flow rate in said steam line; second flow rate sensing means connected to said feedwater line providing a feedwater flow rate signal proportional to the feedwater flow rate in said feedwater line; a flow rate summer circuit connected to receive said steam flow rate and feedwater flow rate signals and responsive thereto to produce a flow rate difference signal proportional to the difference between the water-equivalent steam outflow rate and the feedwater inflow rate; first and second water level control channels each including: water level sensing means including upper and lower sensors connected to said vessel providing a water level position signal indicative of the position of the water level in said vessel, a level signal summer circuit connected to receive said water level position signal at a first input thereof, means for applying said flow rate difference signal to a second input of the level signal summer circuit of each channel whereby said level signal summer circuit produces a modified level position signal proportional to the difference between said level position signal and said flow rate difference signal, a level control circuit for normally receiving said modified level position signal for comparing it to a predetermined level set point and for producing a level correction output signal, a level signal switching circuit operative in a normal first position to connect the output of said level signal summer circuit to the input of said level control circuit for normally applying said modified level position signal to said level control circuit, said switching circuit being operative in a second position to disconnect said level signal summer circuit and to connect the output of said water level sensing means to the input of said level control circuit whereby said level position signal is applied directly thereto; rate of change detection means connected to receive said flow rate difference signal and responsive to a predetermined rapid rate of change thereof to apply a switch actuating output signal to said level signal switching circuit whereby said level signal switching circuit is placed in said second position thereof; a controller for said feedwater inflow rate control means for adjusting said control means in response to said level correction signal; a level correction signal switching circuit operative in a normal first position to transmit the level correction signal from the level control circuit of said first channel to said controller and operative in a second position alternatively to transmit the level correction signal from the level control circuit of said second channel to said controller; at least three water level monitoring means each normally producing separate upper and lower limit signals in the event that the water level in said vessel rises to said upper limit or drops to said lower limit; a logic circuit connected to receive said limit signals and responsive to the occurrence of at least two upper or at least two lower limit signals from said level monitoring means for applying a switch actuating signal to said level correction signal switching circuit whereby said level correction signal switching circuit is placed in said second position thereof to thereby transmit the level correction signal from the level control circuit of said second channel to said controller.

4,302,289
METHOD OF EXCHANGING FUEL IN A NUCLEAR REACTOR
Per Lindgren, Vesteras, and Sture Helmersson, Kolback, both of Sweden, assignors to AB ASEA-Atom, Vesteras, Sweden
Filed May 30, 1979, Ser. No. 43,901
Claims priority, application Sweden, Jun. 1, 1978, 7806429
Int. Cl.^{3} G21C *19/20*
U.S. Cl. 376—267 **7 Claims**

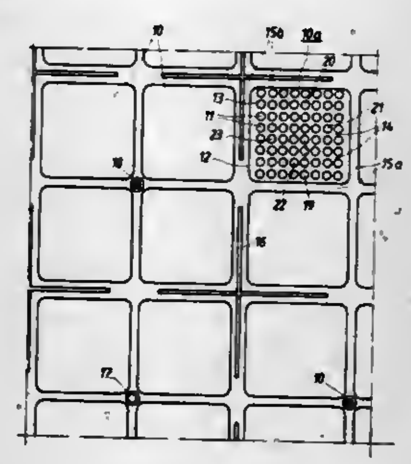

1. Method of refuelling in a light water boiling nuclear-reactor having a core containing a plurality of fuel rod bundles which are built up from a plurality of fuel rods, comprising the steps of replacing at least one burnt-up fuel rod bundle with a fuel rod bundle which is at least partly composed of fuel rods from burnt-up fuel rod bundles from said reactor, and of selecting, when composing said composed fuel rod bundle for said light-water boiling reactor having uranium dioxide and any plutonium dioxide as fuel, said burnt-up fuel rod bundles having a maximum content of fissile material in the form of U 235, Pu 239 and Pu 241 of 1.75% of the initial weight of uranium and any plutonium in the fuel the mean content of fissile material in the fuel rod bundle thus composed being higher than the mean content of fissile material in the fuel rod bundle which is replaced by said composed fuel rod bundle.

4,302,290
NUCLEAR REACTOR VESSEL HEAD EQUIPMENT SUPPORT STRUCTURE
Joseph M. Mazur, Ludlow, Mass., and Donn M. Matteson, South Windsor, Conn., assignors to Combustion Engineering, Inc., Windsor, Conn.
Filed Dec. 31, 1979, Ser. No. 108,621
Int. Cl.^{3} G21C *19/20*
U.S. Cl. 376—287 **10 Claims**

1. A support structure system adapted for use in cooperative association with a nuclear reactor vessel comprising:

a. mounting means operative for selectively mounting the support structure system in either one of a first and second positions relative to the nuclear reactor vessel;
b. multiple deck means arranged in a tiered array, said multiple deck means being interconnected one with another to form an integral structure;
c. a multiplicity of cables routed through said multiple deck means, said multiplicity of cables each having one end thereof extending in a first direction and having the other end thereof extending in a second direction oriented substantially perpendicular to said first direction;
d. connector means operative for cooperatively associating said one end of each of said multiplicity of cables with the nuclear reactor vessel;
e. first support means operative for purposes of providing a separation between individual ones of said multiplicity of cables, said first support means further being operative to provide support to said multiplicity of cables intermediate the length thereof; and
f. a second support means operative for supporting said other end of each of said multiplicity of cables.

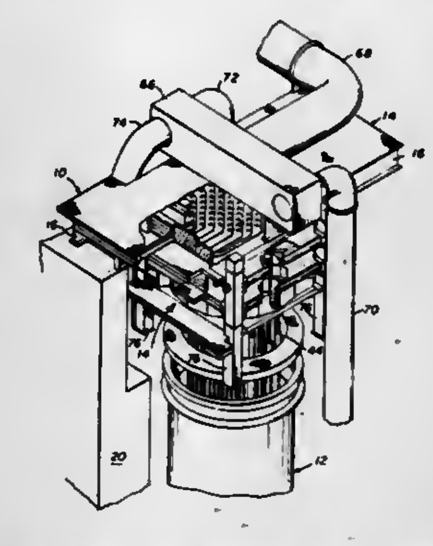

4,302,291
UNDERWATER NUCLEAR POWER PLANT STRUCTURE
Stephen B. Severs, 3454 Castle Glen Dr., Apt. 216, San Diego, Calif. 92123, and Harry V. Toll, 7 Dewart Rd., Greenwich, Conn. 06830
Filed May 3, 1979, Ser. No. 35,709
Int. Cl.^{3} G21C *19/20, 19/32;* E02D *22/24, 29/00*
U.S. Cl. 376—293 **12 Claims**

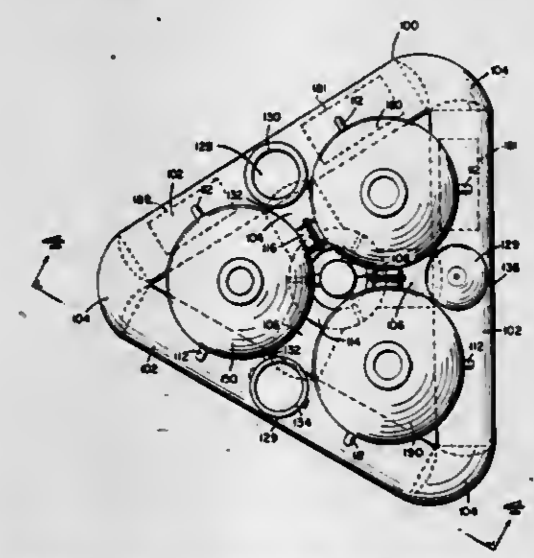

1. A structure for an underwater nuclear power generating plant comprising:

three spherical pressure vessels for housing various components of a nuclear power generating plant; and
a submersible platform having a triangular configuration for supporting said pressure vessels and connected thereto, said platform formed from three interconnected tubular leg members, three tubular trusses, each truss having two ends, a central post member, one end of each of said trusses being connected to one associated leg member with the other end of each truss being connected to said central post member; and
each said pressure vessel being adjacent to and supported by two leg members, the interior of each said pressure vessel being in communication with the interior of each adjacent tubular leg member such that material can be readily transferred to and from the interior of an associated pressure vessel to the interior of an associated leg member.

4,302,292
APPARATUS FOR THE CATALYTIC CRACKING OF GASES
Herbert von Waclawiczek, Bergisch Gladbach, and Walter Jäger, Engelskirchen, both of Fed. Rep. of Germany, assignors to GHT, Gesellschaft für Hochtemperatur-Technik mbH, Bergisch Gladbach, Fed. Rep. of Germany
Division of Ser. No. 14,358, Feb. 23, 1979, abandoned. This application Oct. 5, 1979, Ser. No. 82,597
Claims priority, application Fed. Rep. of Germany, Mar. 3, 1978, 2809126
Int. Cl.^{3} E21B *12/02*
U.S. Cl. 376—325 **3 Claims**

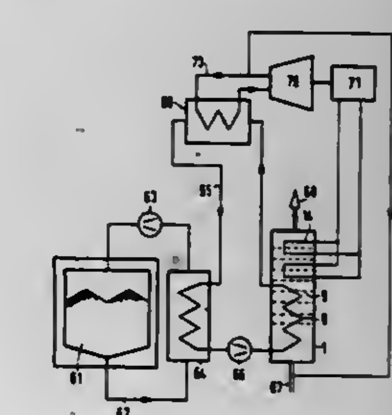

1. Apparatus for catalytically converting gases at a high temperature which comprises,

(a) a gas-cooled, high temperature nuclear reactor delivering gas heated to a temperature above 800° C.,
(b) a cracking furnace provided with inlets and outlets for cracking gas passed through openings in a plurality of superposed catalyst beds spaced from one another, the spaces inbetween a last section of catalyst beds before discharge of the cracking gas from the catalyst beds being occupied by electric resistance heaters designed to raise the temperature of the cracking gas to above 1000° C., and the spaces in a next section of catalyst beds adjacent to and upstream from said last section having connecting means for flowing said heating gas crosswise to the flow of said cracking gas and out of direct contact with said cracking gas, and crossover connecting means for directing the flow of heating gas from a connecting means in a space to another connecting means,
(c) electricity generating means connected to these heaters and powered by a steam turbine, and
(d) a steam generator for delivering steam to said turbine and heated by the heating gas leaving the cracking furnace, and conduit means for recirculating the heating gas from the steam generator to the nuclear reactor.

4,302,293

GAS-COOLED HIGH TEMPERATURE REACTOR WITH SUPPORTING STRUCTURE HAVING GAS CONDUITS THEREIN

Claus Elter, Bad Durkheim; Wilfried Stracke, Oftersheim; Heinrich Stach, Ilvesheim; Josef Schoening, Hambruecken, and Hans G. Schwiers, Ketsch, all of Fed. Rep. of Germany, assignors to Hochtemperatur-Reaktorbau GmbH, Cologne, Fed. Rep. of Germany

Filed Oct. 16, 1979, Ser. No. 85,379

Claims priority, application Fed. Rep. of Germany, Dec. 15, 1978, 2854155

Int. Cl.³ G21C *19/28*

U.S. Cl. 376—381 **16 Claims**

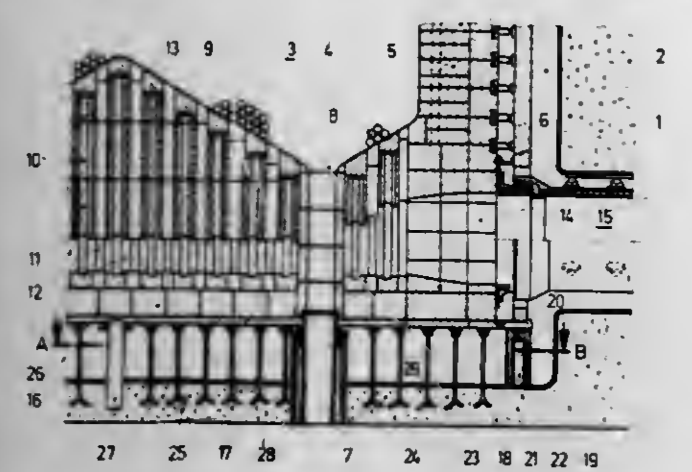

1. A gas-cooled high temperature reactor arrangement inside a prestressed cylindrical pressure vessel comprising:
- a reactor core;
- a floor plate comprising a disk-like center member and an annular outer member;
- a core support structure resting on said disk-like center member and in supporting communication with said reactor core;
- a lateral thermal shield surrounding the sides of said reactor core and resting on said annular outer member;
- a plurality of elongated support members securely fastened at one end to said disk-like center member and at the other end to the prestressed pressure vessel;
- a plurality of columnar support members resting on the prestressed pressure vessel at their lower end and in supporting communication with said annular outer member at their upper end; and
- means for movably supporting said annular outer member on said plurality of columnar support member;
- wherein said elontated support members are capable of bending, in response to stresses in the direction radial to the central axis of the reactor core while remaining rigid in response to stresses in the direction tangential to the central axis of the reactor core.

4,302,294

NUCLEAR REACTOR FUEL ASSEMBLIES

Joseph Leclercq, Le Vesinet, France, assignor to Framatome, Courbevoie, France

Filed May 9, 1979, Ser. No. 37,482

Claims priority, application France, May 19, 1978, 78 14859

Int. Cl.³ G21C *3/30*

U.S. Cl. 376—446 **5 Claims**

1. An easily dismountable nuclear reactor fuel assembly comprising:
- a bundle of parallel fuels rods;
- cross-pieces extending transversely relative to said fuel rods and holding said rods apart;
- support tubes which are substituted for some of said fuel rods for supporting said assembly, said support tubes being longer than said fuel rods;
- transverse end plates for longitudinally supporting said fuel rods and for ensuring, in cooperation with said support tubes the rigid assembly of said assembly;
- at least one end of said assembly, a grid which does not contact the fuel rods extending transversely relative to said support tubes in their end parts and inwardly of the corresponding one of said end plates, said grid forming a network of cells which approximately correspond in size and position to said fuel rods so that a said fuel rod can pass by longitudinal displacement through a said cell of said grid;
- means fixing the corresponding ends of said support tubes to said grid; and
- means for detachably fixing said corresponding end plate to said grid, said means comprising cylindrical sockets which extend through passages provided in said corresponding end plate and through some of said cells of said grid, each said socket comprising:
- bearing surfaces at the level of the outer face of said end plate and the inner face of said grid,
- means at the outer end of said socket for cooperation with a tool rotating said socket between a first position in which said socket can be freely inserted into said cell of said grid, and a second position in which said bearing surface at the level of said inner face of said grid comes into contact with said inner face of said grid to lock said grid to said end plate, and
- a deformable part which is expandable into one or more housings provided at the level of said passage in said end plate or of said cell of said grid to prevent rotation of said socket relative to said grid.

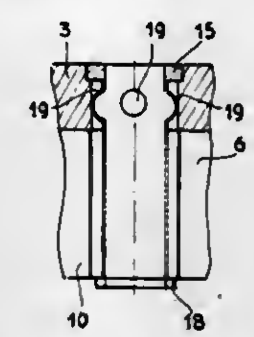

4,302,295

NUCLEAR FUEL ELEMENT

Masayuki Shimada, Tokyo, Japan, assignor to Tokyo Shibaura Denki Kabushiki Kaisha, Kawasaki, Japan

Filed Jan. 28, 1980, Ser. No. 115,883

Claims priority, application Japan, Jan. 31, 1979, 54-9156

Int. Cl.³ G21C *3/10*

U.S. Cl. 376—450 **6 Claims**

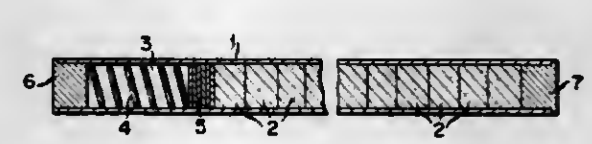

1. A fuel element comprising a cladding tube and a fuel pellet material loaded in the cladding tube, characterized in that a metal foil having a tag gas implanted therein for detecting breakage of the cladding tube is further loaded in the cladding tube, the metal foil being loaded in the cladding tube on the end portion or between said pellet in the form of circular foils or coil of a ribbon-shaped foil, and the circular foil or coil having a diameter smaller than the inner diameter of the cladding tube.

4,302,296

APPARATUS FOR INSULATING HOT SODIUM IN POOL-TYPE NUCLEAR REACTORS

John E. Sharbaugh, Bullskin Township, Fayette County, and Wesley L. Howarth, Bridgeville, both of Pa., assignors to Electric Power Research Institute, Inc., Palo Alto, Calif.

Filed Sep. 28, 1978, Ser. No. 946,638

Int. Cl.³ G21C *9/00*

U.S. Cl. 376—290 **10 Claims**

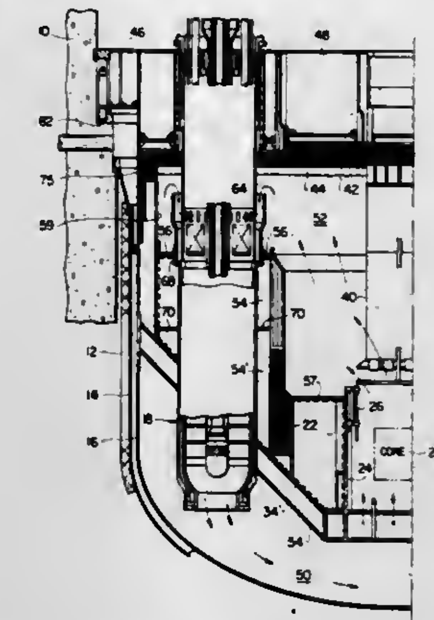

1. In a pool-type nuclear reactor which uses liquid sodium as a coolant, comprising a vertically extending main reactor vessel; a generally horizontally extending structural load bearing arrangement located within and extending across said vessel; a reactor core located directly on top of and being supported by said arrangement; a first plenum located within and generally horizontally across said vessel above said load bearing arrangement and core for containing a relatively turbulent supply of liquid sodium; and a second plenum located within said vessel above and directly adjacent to said load bearing arrangement around said core such that the latter and said second plenum together separate said first plenum and load bearing arrangement from one another, said second plenum containing a stagnant quantity of sodium serving as a thermally insulating fluid barrier between the first plenum and said load bearing arrangement.

4,302,297

DESALINATION APPARATUS WITH POWER GENERATION

Gerald F. Humiston, Apt. E202, 2909 Gulf To Bay Blvd., Clearwater, Fla. 33519

Continuation of Ser. No. 799,968, May 24, 1977, abandoned. This application Jul. 3, 1980, Ser. No. 165,778

Int. Cl.³ C02F *1/04;* **B01D** *3/10*

U.S. Cl. 202—185 R **6 Claims**

1. An apparatus for desalinating ocean waters and furnishing electrical power, comprising in combination:
- an evaporator;
- a first conduit for connecting said evaporator to the warm surface water of the ocean;
- said first conduit forming a barometric leg to separate the low internal pressure of the evaporator from the ambient atmospheric pressure during operation of said evaporator;
- means for circulating the ocean water between said evaporator and the warm surface water of the ocean to replace the heat of vaporization lost in the evaporator;
- a closed condenser comprising condenser cooling means connected by a second conduit to cool ocean water;
- a first pump interposed in said second conduit for circulating cool ocean water through said condenser cooling means to cool the vapors evaporated from said evaporator;
- said closed condenser isolating the vapors to be condensed from the cool ocean water;
- a third conduit connecting said evaporator to said condenser for directing evaporator vapors into thermal contact with said condenser cooling means;
- a prime mover interposed in said third conduit to be driven by the mass flow of vapors between said evaporator and said condenser resulting from the pressure differential between the saturated vapors in said evaporator and the saturated vapors in said condenser;
- a particle separation channel interposed between said evaporator and said condenser for reducing the velocity of vapors from said evaporator to prevent non-vapors from entering said condenser;
- a condenser conduit connected to said condenser for providing a barometric leg for the removal of condensed desalinated water from the lower pressure in said condenser to the higher pressure of the atmospheric air;

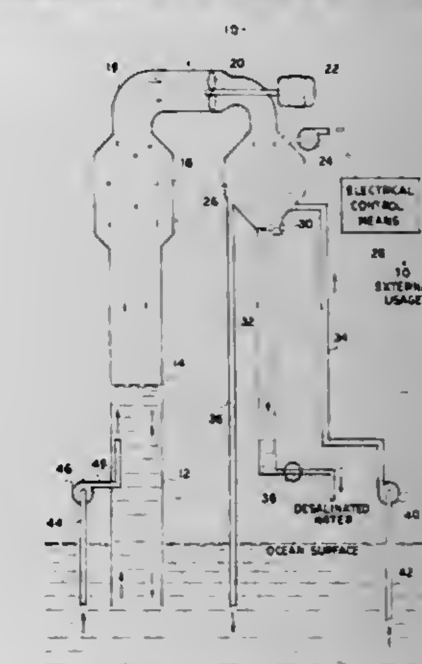

- a condensate water output valve located in said barometric leg for recovering the condensed desalinated ocean water therefrom;
- a liquid level control means to sense the level of the condensed desalinated ocean water in the barometric leg for controlling said condensate water output valve to maintain a desired level of condensed desalinated ocean water;
- a vacuum pump in fluid communication with said third conduit for initially reducing the internal vapor pressure in said evaporator for initiating operation of the apparatus;
- an electrical generator coupled to said prime mover for generating electrical power; and
- an electrical control system for connecting said electrical power for controlling said pumps and said valve.

4,302,298

PROCESS FOR ISOLATING METHYL TERT-BUTYL ETHER FROM THE REACTION PRODUCTS OF METHANOL WITH A C_4 HYDROCARBON CUT CONTAINING ISOBUTENE

Paul Mikitenko, Noisy le Roi, and Lionel Asselineau, Paris, both of France, assignors to Institut Francais du Petrole, Rueil-Malmaison, France

Filed Feb. 22, 1980, Ser. No. 123,539

Claims priority, application France, Feb. 22, 1979, 79 04786

Int. Cl.³ B01D *3/14*

U.S. Cl. 203—75 **15 Claims**

1. In a process for isolating methyl tert-butyl ether (MTBE) from the products of reaction of methanol with a C_4 hydrocarbon cut containing isobutene, comprising the steps of (a) introducing a feed mixture of said reaction products, comprising MTBE, methanol and C_4 hydrocarbons including residual isobutene, into a superatmospheric distillation zone, at an inter-

mediate point thereof, (b) recovering MTBE from the bottom of said zone and a mixture of C_4 hydrocarbons with methanol from the top thereof, (c) washing said mixture recovered from step (b) with water in a washing zone, and (d) separating and recovering a washed condensed C_4 hydrocarbon fraction and a condensed water/methanol fraction, the improvement com-

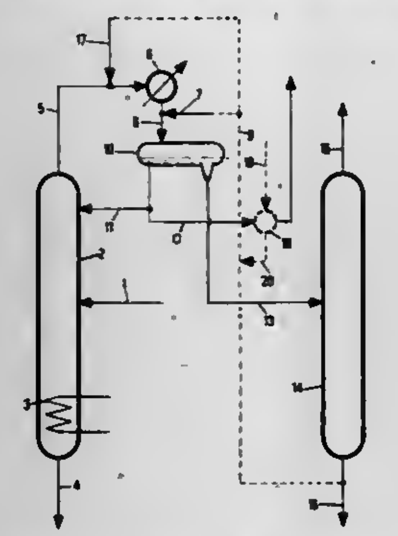

prising recycling a portion of the washed, condensed and separated substantially water free C_4 hydrocarbon fraction to the distillation zone as reflux, at least 25% of said portion being recycled to the top of said zone; thereby increasing the rate of recovery of MTBE, decreasing the methanol content thereof and decreasing the heat consumption of the distillation zone.

4,302,299
TITRATION CONTROL METHOD
Seiji Ishikawa, Kitakyushu, Japan, assignor to Mitsubishi Kasei Kogyo Kabushiki Kaisha, Tokyo, Japan
Division of Ser. No. 973,562, Dec. 27, 1978, Pat. No. 4,203,156. This application Oct. 4, 1979, Ser. No. 82,227
Claims priority, application Japan, Dec. 27, 1977, 52-156397
Int. Cl.[3] G01N *27/56*
U.S. Cl. 204—1 T **4 Claims**

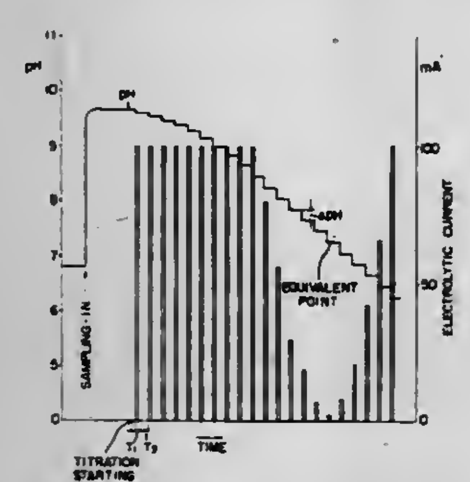

1. In a titration control method comprising the steps of successively detecting an electric potential representing a concentration of a subject material to be titrated, and controlling a quantity of each intermittent titration based on an electric signal obtained from detected values of a potential until an end point is reached, the improvement wherein said control of the quantity of each intermittent titration is carried out in accordance with a following equation:

$$Q_n = K\frac{Q_{n-1}}{X_o - X_f}$$

wherein

Q_n: quantity of n-th intermittent titration, n being an integer larger than 0,

Q_{n-1}: quantity of (n−1)th intermittent titration,

K: a constant,

X_o: a value of said electric potential detected just before the (n−1)th intermittent titration Q_{n-1},

X_f: a value of said electric potential detected just after the (n−1)th intermittent titration Q_{n-1}.

4,302,300
METHOD OF MANUFACTURE OF ABRASIVE TOOLS HAVING METAL GALVANIC BOND MATERIAL
Ludwika Chamska; Mieczyslaw Maciak; Stanislaw Majewski; Miroslaw Omielczenko, and Jerzy Panczyk, all of Warsaw, Poland, assignors to Kombinat Przemyslu Narzedziowego "VIS", Warsaw, Poland
Filed Aug. 15, 1980, Ser. No. 178,944
Claims priority, application Poland, Aug. 25, 1979, 217945
Int. Cl.[3] C25D *15/00*
U.S. Cl. 204—16 **6 Claims**

1. In a method of manufacturing an abrasive tool comprising electrolytically depositing a layer of metal binding material together with particles of an abrasive material on a tool, the improvement wherein the abrasive material initially comprises larger particles having a particle size of from 63/50 to 200/160 micrometers and subsequently comprises smaller particles having a particle size smaller by at least one order of magnitude than the particle size of the larger particles, and wherein the time of depositing the metal binding material and the larger particles is at least half of the total time of applying the metal binding material.

4,302,301
SOLID ELECTROLYTE DEPOSITION ON ANODIZED PELLETS
Melvin Tierman, North Adams, Mass., assignor to Sprague Electric Company, North Adams, Mass.
Filed Jun. 30, 1980, Ser. No. 164,649
Int. Cl.[3] H01G *9/24*
U.S. Cl. 204—38 A **8 Claims**

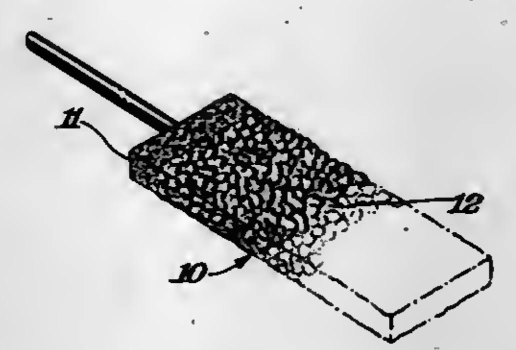

1. A process for manufacturing a solid electrolytic capacitor comprising anodizing a porous valve metal pellet to form an anodic oxide coating thereon, impregnating said anodized pellet with a solution of manganese nitrate containing a surfactant chosen from the group of nonionic, amphoteric, and polyelectrolyte surfactants, subjecting said impregnated pellet to pyrolysis to convert said manganese nitrate to manganese dioxide whereby said surfactant reduces ridging of said manganese dioxide during said pyrolysis conversion, and forming a cathode layer on said anodized pellet.

4,302,302
METHOD OF FEEDING ALUMINA TO AN ALUMINIUM ELECTROLYTIC CELL AND APPARATUS THEREFOR
Toshiaki Kaifuchi, Joetsu, Japan, assignor to Mitsubishi Light Metal Ind., Ltd., Tokyo, Japan
Filed May 9, 1980, Ser. No. 148,381
Int. Cl.[3] C25C *3/06, 3/14*
U.S. Cl. 204—67 **2 Claims**

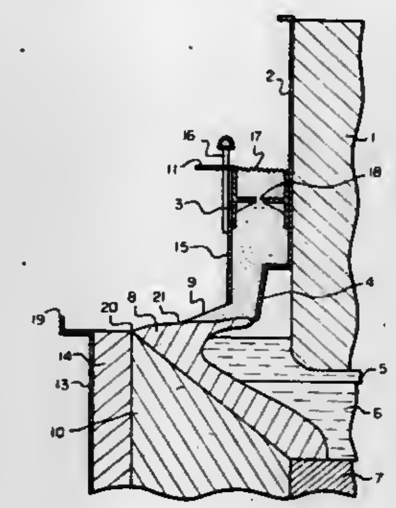

1. A method of feeding alumina to a Söderberg type aluminum electrolytic cell having a cathode cell including an alumina freeze, comprising the steps of:

forming, on the side of the anode casing of the anode of said electrolytic cell, a box body having an opening in the upper part thereof and an open lower end, a vertically adjustable dam plate spaced outwardly from said anode casing and adapted to be above the alumina freeze, and side plates extending between said anode casing and said dam plate;

supplying alumina to said box body so that said alumina flows from said box body and said dam plate and accumulates on said freeze with a surface whose slope is determined by the angle of repose of said alumina;

adjusting the vertical position of said dam plate to a predetermined height; and

breaking said freeze whereby a predetermined quantity of alumina is charged into said electrolytic cell and is replaced by alumina from said box body.

4,302,303
PERMEABLE DIAPHRAGM FOR AN ELECTROCHEMICAL CELL
Robert Guillaume, Brussels; Jean-Pierre Pleska, Paturages, and Jean Indeherbergh, Brussels, all of Belgium, assignors to Solvay and Cie, Brussels, Belgium
Division of Ser. No. 62,039, Jul. 30, 1979, abandoned. This application Oct. 17, 1980, Ser. No. 197,826
Claims priority, application France, Jul. 31, 1978, 78 22919
Int. Cl.[3] C25B *1/02, 1/26, 13/08*
U.S. Cl. 204—128 **17 Claims**

1. A method for the manufacture of chlorine and hydrogen gases comprising electrolyzing an aqueous solution of alkali metal chloride in an electrolytic cell containing a permeable diaphragm comprised of a porous sheet of a fibrous organic polymeric material obtained from a suspension of the fibrous polymeric material in an organic liquid.

4,302,304
PROCESS FOR TREATING ELECTROLYTIC SOLUTION
Kenji Ueda, and Akihiro Sakanishi, both of Nagasaki, Japan, assignors to Mitsubishi Jukogyo Kabushiki Kaisha, Tokyo, Japan
Filed Jul. 31, 1979, Ser. No. 62,531
Claims priority, application Japan, Aug. 11, 1978, 53-97995; Jun. 8, 1979, 54-72106
Int. Cl.[3] C25B *1/00*
U.S. Cl. 204—130 **4 Claims**

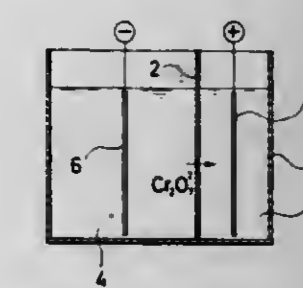

1. In a method for treating metal plating wash water solution containing chromic acid to concentrate said solution wherein the solution is fed to an electrolytic cell which is divided by a permeable diaphragm into a feed chamber and a recovery chamber each of said chambers being provided with a positive or negative electrode and the solution is electrolyzed therein, the improvement which comprises feeding the [dilute] solution to the feed chamber but not to said recovery chamber, maintaining the electrode in the recovery chamber in close proximity to or intimate contact with the diaphragm, allowing the electrolyzed and more concentrated solution to exude through the diaphragm into the recovery chamber and removing the concentrated solution so as to maintain a minimal volume of the concentrated solution in the recovery chamber.

4,302,305
ISOTOPE SEPARATION PROCESS
Andrew Kaldor, Berkeley Heights, N.J., and Paul Rabinowitz, Old Bethpage, N.Y., assignors to Exxon Research & Engineering Co., Florham Park, N.J.
Continuation-in-part of Ser. No. 797,390, May 16, 1977, which is a continuation of Ser. No. 614,623, Sep. 18, 1975, and a continuation-in-part of Ser. No. 840,049, Oct. 6, 1977, which is a continuation of Ser. No. 715,449, Aug. 18, 1976, which is a continuation-in-part of Ser. No. 614,623, Sep. 18, 1975. This application Mar. 6, 1978, Ser. No. 883,722
Int. Cl.[3] B01D *59/00, 59/34*
U.S. Cl. 204—157.1 H **2 Claims**

1. A method of separating the isotopes of an element which forms a volatile compound having an isotopically shifted but overlapping infrared absorption spectrum; the method including the steps of:

(a) irradiating said volatile compound with a first infrared radiation of low power which is preferentially absorbed by a molecular vibration of molecules of said compound containing a predetermined isotope of said element thereby providing excited molecules of said compound enriched in said molecules of said compound containing said predetermined isotope of said element;

(b) irradiating said volatile compound with a second infrared radiation of high power which is not substantially absorbed by said molecular vibration of said molecule at an intensity sufficient to further excite said excited molecules to undergo a conversion said second infrared radiation being shifted in frequency from the frequency of the first radiation so as not to cause power broadening of the preferential absorption transition; and

(c) separating the converted molecules from the unconverted molecules.

4,302,306
BROMINATION OF SIDE CHAIN OF M-PHENOXYTOLUENE
Kanzi Katsuragawa; Hideo Sakka, and Keiichi Kihara, all of Shin-nanyo, Japan, assignors to Toyo Soda Manufacturing Co., Ltd., Shin-nanyo, Japan
Filed Apr. 18, 1980, Ser. No. 141,354
Claims priority, application Japan, May 31, 1979, 54-66801
Int. Cl.³ C07C *41/22*
U.S. Cl. 204—158 HA **6 Claims**

1. A process for brominating the side chain of m-phenoxytoluene with a polyhaloethane having the formula

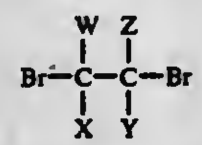

wherein W and Z respectively represent Cl or Br and X and Y respectively represent Cl, Br or H in a liquid phase.

4,302,307
METHOD FOR THE IMPROVEMENT OF GRAMOPHONE RECORDS
Kiyoshi Imada, Omiya; Susumu Ueno, Ibaragi, and Tokuji Abe, Omiya, all of Japan, assignors to Shin-Etsu Chemical Co. Ltd., Japan
Filed Jul. 25, 1979, Ser. No. 60,502
Claims priority, application Japan, Jul. 27, 1978, 53-91906
Int. Cl.³ C07C *3/24*
U.S. Cl. 204—169 **3 Claims**

1. A method for the improvement of the surface properties of a gramophone record made of vinyl chloride based resin which comprises exposing the gramophone record to a low temperature plasma atmosphere of a gas having no polymerizability in the plasma condition under a pressure in the range from 0.001 Torr to 10 Torr, wherein said gas having no polymerizability in the plasma condition is selected from the group consisting of helium, neon, argon, nitrogen, nitrous oxide, nitrogen dioxide, oxygen, air, chlorine, hydrogen chloride, carbon monoxide, carbon dioxide and hydrogen.

4,302,308
METHOD FOR ELECTROLYTIC DENITRATION OF TOBACCO
Gus D. Keritsis, Richmond, Va., assignor to Philip Morris, Inc., New York, N.Y.
Continuation-in-part of Ser. No. 127,479, Mar. 5, 1980, Pat. No. 4,253,929. This application Dec. 16, 1980, Ser. No. 216,803
Int. Cl.³ B01D *13/02*
U.S. Cl. 204—180 P **11 Claims**

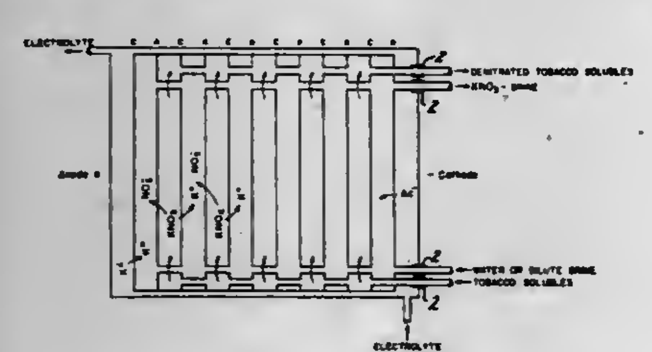

1. A method for denitrating aqueous tobacco extracts which comprises circulating an acidic tobacco extract having a solids content of about 5–50% and a resistivity of about 8–50 ohm-cm through the alternate cells of an electrodialysis unit having an anion permeable membrane toward the anode spaced no more than about 0.04 inches from an anion impermeable membrane toward the cathode, said membranes having a tightness sufficient to minimize transfer of nonelectrolyte substances, while circulating brine through the remaining cells and applying about 0.5 to 2.0 volts/cell pair to the unit, characterized in that the electrodes are isolated from all elements of the unit which are in direct electrolytic contact with the opposite electrode, the cell adjacent to the cathode has an anion permeable membrane toward the catholyte and an electrolyte the anion of which forms soluble salts with polyvalent cations is employed.

4,302,309
METHOD OF MANUFACTURING CATHODES
Reinier M. van den Heuvel, Eindhoven, Netherlands, assignor to U.S. Philips Corporation, New York, N.Y.
Division of Ser. No. 84,018, Oct. 11, 1979, Pat. No. 4,252,630. This application Oct. 9, 1980, Ser. No. 195,533
Claims priority, application Netherlands, Oct. 31, 1978, 7810808
Int. Cl.³ C25D *13/02, 13/12, 17/08*
U.S. Cl. 204—181 N **5 Claims**

1. A method of electrophoretically coating cathode shafts with an emissive layer, comprising the sequential steps of
- providing a plate formed of an electrically insulating material having an electrically conducting layer on at least one side, and an aperture in the plate defining an opening in the layer;
- placing a cathode shaft to be coated in the aperture, so arranged that a shaft surface to be coated is within the aperture and is exposed toward said opening and spaced from said opening a distance which is small compared with the plate thickness;
- applying a suspension containing substances for forming the emissive layer, at least so as to cover said conducting layer and said shaft surface;
- applying an electric potential between said conducting layer and said shaft;
- removing said electric potential;
- removing said suspension from application to the conducting layer and shaft surface;
- drying the emissive material layer adhering to the shaft surface; and
- removing the cathode shaft from the plate aperture.

4,302,310
RADIAL FLOW ELECTROFILTER
Frederick D. Watson; Weldon D. Mayse, and Albert D. Franse, all of Houston, Tex., assignors to Petrolite Corporation, St. Louis, Mo.
Filed Oct. 16, 1979, Ser. No. 85,367
Int. Cl.³ B03C *5/00, 5/02*
U.S. Cl. 204—186 **12 Claims**

1. An electrofilter for removal of finely divided solids from liquids of low electrical conductivity comprising:
(a) a vertical cylindrical metallic vessel;
(b) cylindrical fluid distributor means concentric with and spaced apart from said vessel;
(c) a porous bed of a dielectric filtering medium disposed interiorly of said cylindrical fluid distributor means;
(d) a plurality of annular parallel planar electrodes extending horizontally through at least a major portion of said bed, all said electrodes being permeable;
(e) fluid inlet means to said vessel fluidly communicating with said annular space;
(f) tubular fluid collector means extending axially through at least a major portion of said bed;

(g) fluid outlet means fluidly communicating with said central tubular collector means; and
(h) conductor means for supplying electrical potential to at least alternately spaced said electrodes to create electric fields between adjacent electrodes;
said electrofilter being provided with backflushing means adapted to cause backflushing fluid to pass transversely through the electrodes, said backflushing means comprising:

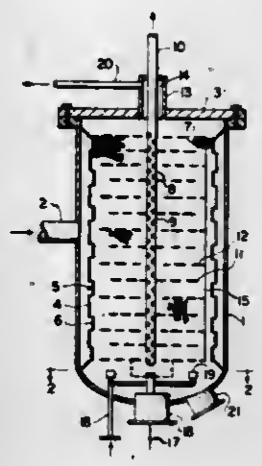

(i) backflush inlet means;
(j) backflush fluid distributor means in the bottom portion of said vessel fluidly communicating with said backflush fluid inlet means; and
(k) backflush fluid outlet means in the upper portion of said vessel.

4,302,311
SPUTTER COATING OF MICROSPHERICAL SUBSTRATES BY LEVITATION
Arthur T. Lowe, Tempe, Ariz., and Charles D. Hosford, Los Alamos, N. Mex., assignors to The United States of America as represented by the United States Department of Energy, Washington, D.C.
Filed Nov. 19, 1979, Ser. No. 95,681
Int. Cl.³ C23C *15/00*
U.S. Cl. 204—192 R **8 Claims**

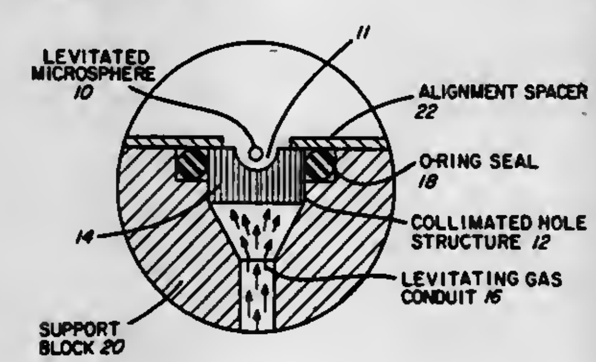

1. A method of coating a microsphere with a substantially uniform coating of at least one coating material selected from the group consisting of metals and non-metals, said method comprising:
a. levitating said microsphere over a dimple hollowed out in a collimated hole structure comprising an array of parallel linear gas outlets by passing at least one levitating gas through said array; and
b. simultaneously sputtering said coating material onto said microsphere.

4,302,312
DEVICE FOR PRODUCING CONTROL SIGNAL FOR FEEDBACK CONTROL OF AIR/FUEL MIXING RATIO
Shigeo Ishitani, Yokosuka; Shinji Kimura, Yokohama; Hiroshi Takao, Kamakura, and Masaaki Uchida, Yokohama, all of Japan, assignors to Nissan Motor Co., Ltd., Yokohama, Japan
Filed Jul. 25, 1980, Ser. No. 172,227
Claims priority, application Japan, Jul. 28, 1979, 54-95574
Int. Cl.³ G01N *27/58*
U.S. Cl. 204—195 S **10 Claims**

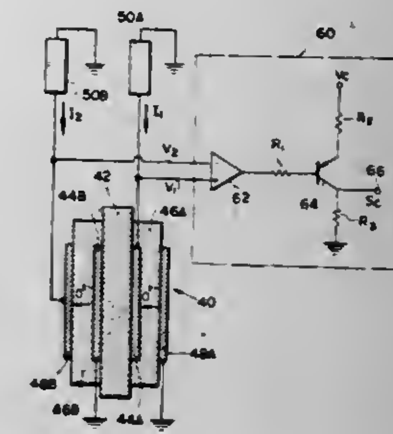

1. A device to produce a control signal for feedback control of the air/fuel ratio of an air-fuel mixture supplied to a combustor, the device comprising:
- an oxygen-sensitive element which is to be disposed in a combustion gas exhausted from the combustor and comprises first and second oxygen concentration cells each comprising of a layer of an oxygen ion conductive solid electrolyte; a measurement electrode layer formed on one side of the solid electrolyte layer; a reference electrode layer formed on the other side of the solid electrolyte layer and a shield layer formed on the reference electrode layer; side of the solid electrolyte layer such that macroscopically the reference electrode layer is entirely shielded from an environmental atmosphere by the shield layer and the solid electrolyte layer, at least one of the solid electrolyte layer and the shield layer of each concentration cell having a microscopically porous and gas permeable structure;
- DC power supply means for forcing a first DC current of a predetermined intensity to flow through the solid electrolyte layer of the first cell from the reference electrode layer towards the measurement electrode layer and a second DC current of a predetermined intensity to flow through the solid electrolyte layer of the second cell from the measurement electrode layer towards the reference electrode layer; and
- a signal-producing circuit having comparing means for making a comparison between a first output voltage developed between the reference and measurement electrode layers of the first cell and a second output voltage developed between the reference and measurement electrode layers of the second cell to examine which one of the first and second output voltages is higher than the other, and signal-generating means for producing said control signal which varies according to a high-low relationship between the first and second output voltages examined by the comparing means.

4,302,313

ELECTRODE-CONTAINING DEVICE WITH CAPILLARY TRANSPORT BETWEEN ELECTRODES

Richard L. Columbus, Rochester, N.Y., assignor to Eastman Kodak Company, Rochester, N.Y.

Continuation-in-part of Ser. No. 59,816, Jul. 23, 1979, abandoned, which is a continuation-in-part of Ser. No. 954,689, Oct. 25, 1978, Pat. No. 4,233,029. This application Mar. 10, 1980, Ser. No. 128,413

Int. Cl.³ G01N *27/46, 27/58*

U.S. Cl. 204—195 R **25 Claims**

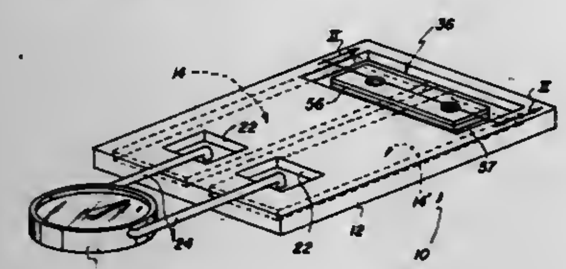

1. In a device for determining the activity of an ionic analyte of a liquid, said device including a pair of solid electrodes each constructed to generate an electrical potential that is proportional to the activity of an ionic analyte of a contacting quantity of such a liquid, and flow control means for directing flow of respective quantities of two such liquids each to a different one of said electrodes and to a junction between said liquids;

the improvement wherein said flow control means includes

(a) two opposed liquid transport surfaces extending from a first location disposed adjacent one of said electrodes to a second location adjacent the other of said electrodes, said surfaces being spaced apart a distance effective to induce capillary flow between said surfaces of introduced liquid and to create a transport zone, said transport zone being in liquid communication with said electrodes and comprising a void zone with fibers in an amount that is from 0 to 5% of the total volume of said zone; and

(b) means defining first and second liquid passageways extending from an exterior surface of said device to said zone;

whereby each of said liquids, when deposited in a different one of said passageways, respectively flows into contact with an electrode and through said transport zone to form a junction with the other liquid intermediate said first and second locations.

4,302,314

VOLTAMMETRIC CELL, MEASURING ELECTRODE AND METHOD

Jerzy Golimowski, Warsaw, Poland; Laszlo Sipos, V. Gorica, Yugoslavia, and Paul Valenta, Aachen, Fed. Rep. of Germany, assignors to Kernforschungsanlage Jülich Gesellschaft mit beschränkter Haftung, Jülich, Fed. Rep. of Germany

Filed Apr. 3, 1980, Ser. No. 136,932

Claims priority, application Fed. Rep. of Germany, Apr. 7, 1979, 2914193

Int. Cl.³ G01N *27/28*

U.S. Cl. 204—195 R **4 Claims**

1. A voltammetric cell for analytical determination of trace materials in a liquid, comprising:

an upwardly open vessel having a bottom;

a cover sealingly engageable with the top of the vessel;

a sample-receiving cup received in said vessel, said vessel having a bottom shaped to receive said cup;

a measuring electrode having electrode material adapted to be in contact with said sample of said liquid to be held in said cup;

a sealed rotary lead-in member for said measuring electrode, said member being disposed in said cover;

an electrically conductive connecting member received in said lead-in member and forming an electrical connection with the electrode material in contact with a sample of said liquid in said cup, said measuring electrode being replaceably connected to said lead-in member;

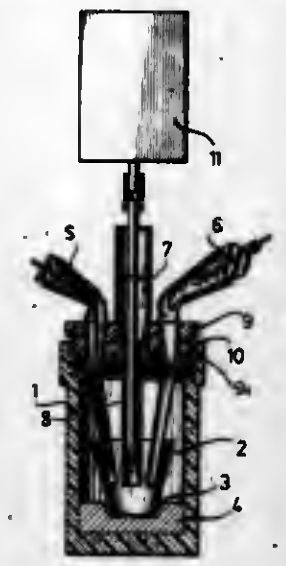

means for rotating said connecting member to rotate said measuring electrode in the sample of liquid in said cup; and

at least one further electrode mounted in said cover and extending into the liquid sample in said cup.

4,302,315

GAS SENSING UNIT

Joseph R. Stetter, Naperville, Ill., and Raymond B. Cromer, New York, N.Y., assignors to Becton, Dickinson and Company, Paramus, N.J.

Filed Jun. 18, 1980, Ser. No. 160,771

Int. Cl.³ G01N *27/46*

U.S. Cl. 204—195 R **9 Claims**

1. An electrochemical sensor for the detection of electrochemically reducible gases comprising

(a) a chamber containing an electrolyte;

(b) a sensing electrode in contact with said electrolyte in said chamber;

(c) a counterelectrode in contact with said electrolyte in said chamber;

(d) said sensing electrode is comprised of gold bonded to a porous hydrophobic membrane;

(e) said counterelectrode is a member selected from the group consisting of iridium and ruthenium; and

(f) said counterelectrode is bonded to a porous hydrophobic membrane.

4,302,316

NON-CONTACTING TECHNIQUE FOR ELECTROPLATING X-RAY LITHOGRAPHY

James F. Nester, Ridgefield, Conn., assignor to The Perkin-Elmer Corporation, Norwalk, Conn.

Filed May 7, 1980, Ser. No. 147,662

Int. Cl.³ C25D *17/06, 17/12*

U.S. Cl. 204—224 R **1 Claim**

1. An apparatus for electroplating an electrically conductive substrate, comprising in combination;

a tank containing a plating solution,

a liquid-tight housing disposed within said plating solution containing an electrically conductive liquid with said substrate forming one side of said housing,

said housing freely removable from said tank,

an anode disposed in said plating solution opposite one surface of said substrate,

a cathode disposed within said housing adjacent to and fixed relative to the other surface of said substrate,

said cathode and said substrate being of circular configuration,

the portion of said housing not formed by said substrate being made of electrically non-conducting material,

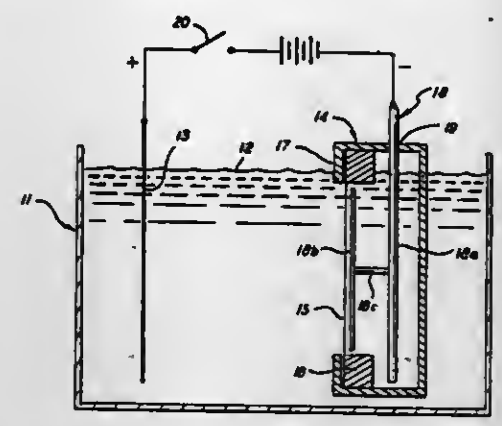

means applying an electrical potential between said anode and cathode for coating said one surface of said substrate without said cathode or housing being coated.

4,302,317

MEANS FOR RECOVERING A PRECIOUS METAL FROM AN ELECTROLYTE SOLUTION CONTAINING IONS OF SAID METAL

Karl J. Mock, 685 Bogert Rd., River Edge, N.J. 07661

Continuation of Ser. No. 673,594, Apr. 5, 1976, abandoned, which is a continuation of Ser. No. 354,432, Apr. 25, 1973, abandoned. This application Mar. 14, 1980, Ser. No. 130,567

Int. Cl.³ C25B *15/08;* C25C *7/06, 1/20*

U.S. Cl. 204—228 **33 Claims**

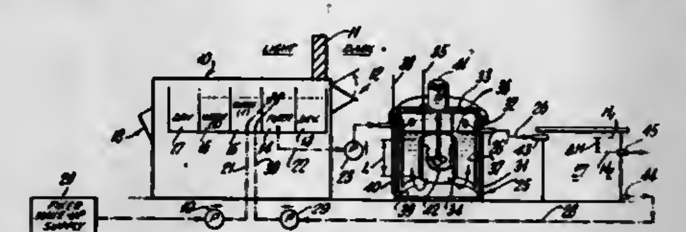

10. An electrochemical device for recovering a precious metal from an electrolyte solution containing ions of said metal, comprising an upwardly open tank having an upper spillway port determining a liquid-capacity level within the tank, said tank having an inlet port communicating directly with the bottom region within the tank, a hollow open-ended stationary cylindrical first electrode of stainless metal positioned in said tank on an upstanding axis and located in clearance relation above said bottom region and beneath said level, a hollow open-ended stationary cylindrical second electrode of stainless metal having upper and lower open ends and concentrically surrounding and radially spaced from said first electrode, and means for impressing a unidirectional plating potential upon said device by opposed-polarity connection to said respective electrodes, whereby said electrodes become anode and cathode, respectively, with plating action on the cathode and in the annular region between said electrodes, thereby locally reducing the density of solution between said electrodes as compared to local density of solution within the inner electrode, so that in the course of plating at the cathode a toroidal circulation of solution may be induced upward between said electrodes and downward within the inner electrode, and so that upwardly-flowing solution reaching the level of the top of said inner electrode may spill to the space within said inner electrode for recirculation downward within said inner electrode.

4,302,318

MEANS FOR RECOVERING SILVER FROM PHOTO CHEMICALS

Karl J. Mock, 685 Bogert Rd., River Edge, N.J. 07661

Continuation-in-part of Ser. No. 673,594, Apr. 5, 1976, which is a continuation of Ser. No. 354,432, Apr. 25, 1973, abandoned. This application Mar. 27, 1980, Ser. No. 134,431

Int. Cl.³ C25D *21/12;* C25C *7/00, 1/20*

U.S. Cl. 204—229 **28 Claims**

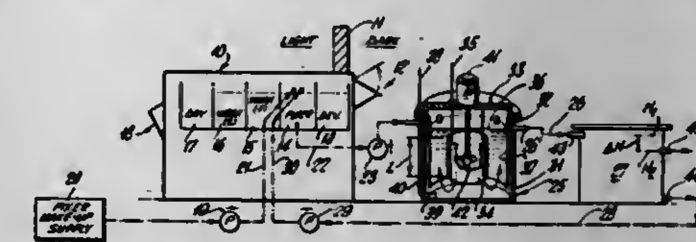

1. An electrochemical device for recovering a precious metal from an electrolyte solution containing ions of said precious metal, comprising a tank with a bottom and sidewall having a predetermined upper level of liquid capacity, first and second electrodes having radially spaced cylindrical surfaces and mounted on a common upstanding axis, the outer one of said electrodes being totally beneath said predetermined level and above the bottom of said tank, said outer electrode being also at least in part in lateral clearance with said sidewall, and impeller means operative beneath said level to develop a recirculatory flow of liquid in said tank and toroidally about said outer electrode, the direction of operation of said impeller means being such as to induce upward flow in the space between said electrodes.

4,302,319

CONTINUOUS ELECTROLYTIC TREATMENT OF CIRCULATING WASHINGS IN THE PLATING PROCESS AND AN APPARATUS THEREFOR

Atsuyuki Ueno, Tokyo, Japan, assignor to Katsygari IJYBI, Tokyo, Japan

Division of Ser. No. 933,995, Aug. 16, 1978, Pat. No. 4,238,314. This application Jun. 6, 1980, Ser. No. 156,939

Int. Cl.³ C25C *7/08;* C25B *15/08*

U.S. Cl. 204—238 **1 Claim**

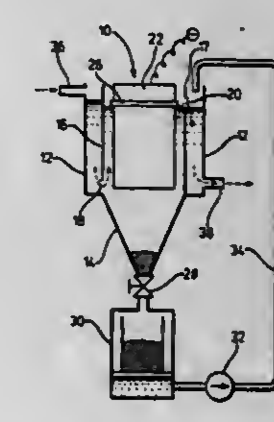

1. Apparatus for the continuous electrolytic treatment of the circulating washings of a plating process comprising a plating bath, a washing vessel arranged in abutting relation with the plating tank, an electrolytic cell communicating through a pipe line with the washing vessel, said electrolytic cell is of an elongated box type and having a bottom of hopper shape and adapted to receive therein partitions spaced apart from opposite side walls of the box, one of said side walls being connected with an inlet pipe for the washings with the adjoining spaced apart partition being provided with an opening at its lower portion while the opposite side wall being connected with an outlet pipe for the washings with the other adjoining spaced apart partition being provided with an opening at its upper portion so that the washings flow through the electrolytic cell,

said electrolytic cell having a cathode provided with a scraper and an anode, means for moving said scraper along said cathode to remove deposits therefrom, filtering means for collection of metal having an inlet connected to the bottom of the electrolytic cell, an on-off valve interposed between the inlet of said filtering means and said electrolytic cell, said filtering means having an outlet communicating through a pipe line with the electrolytic cell, and a pumping means for circulation of the filtered washings to the electrolytic cell.

4,302,320
WATER GAS ELECTROLYZER APPARATUS
Arlin C. Lewis, Box AU, Libby, Mont. 59923
Filed Aug. 14, 1979, Ser. No. 66,364
Int. Cl.³ C25B *9/00*
U.S. Cl. 204—278 **33 Claims**

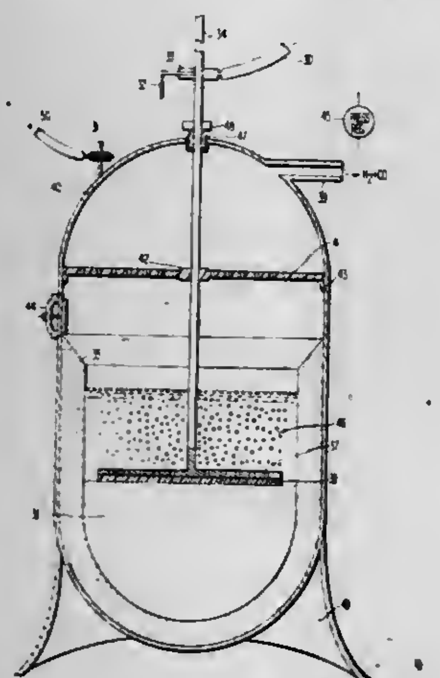

1. Apparatus for producing water gas by electrolysis comprising:
a body of carbon containing material;
means for containing a volume of water in contact with at least a portion of the surface of said carbon-containing material; and
means for passing an electrical current through said body of carbon-containing material and said volume of water, and wherein said means for containing said volume of water is copper or contains copper.

4,302,321
NOVEL SINTERED ELECTRODES
Vittorio deNora, Geneva, Switzerland; Giuseppe Bianchi, and Antonio Nidola, both of Milan, Italy, assignors to Diamond Shamrock Technologies S.A., Geneva, Switzerland
Continuation-in-part of Ser. No. 856,486, Dec. 1, 1977, abandoned, which is a continuation of Ser. No. 436,687, Jan. 25, 1974, abandoned. This application Feb. 7, 1980, Ser. No. 119,471
Claims priority, application Italy, Jan. 26, 1973, 19679 A/73
Int. Cl.³ C25B *1/34, 11/04*
U.S. Cl. 204—291 **13 Claims**

1. An electrode comprising a body formed of a sintered mixture of powders of at least one film-forming metallic material selected from the group consisting of a valve metal and silicon-iron alloys and at least one additive metal selected from the group consisting of Cr, Mn, Re, Fe, Co, Ni, Cu, Ag, Au, Zn, Cd, Ge, Sn, Pb, La and the lanthanide series of the Periodic Table and oxides, metallates and intermetallates thereof, the additive metal at the surface of the electrode being in the oxide form.

4,302,322
LOW HYDROGEN OVERVOLTAGE ELECTRODE
Yoshio Oda; Hiroshi Otouma, and Eiji Endoh, all of Yokohama, Japan, assignors to Asahi Glass Company, Ltd., Tokyo, Japan
Continuation-in-part of Ser. No. 10,257, Feb. 6, 1979, abandoned. This application Apr. 21, 1980, Ser. No. 142,377
Claims priority, application Japan, Feb. 24, 1978, 53-19925
Int. Cl.³ C25B *11/04;* C25D *15/00*
U.S. Cl. 204—293 **9 Claims**

1. In an electrode which comprises a metal layer comprising at least nickel or cobalt on an electrode substrate, the improvement comprising: said metal layer comprising partially exposed metal particles comprising at least Raney nickel alloy or Raney cobalt alloy, the surfaces of which have an oxygen concentration of 47 to 150 ppm, and said metal layer being formed by codepositing said metal and said particles from a dispersion containing metal particles comprising at least Raney nickel alloy or Raney cobalt alloy, at least 30 g/l of Cl^- ions, and Co ions or Ni ions and having a pH of about 1.5 to about 2.

4,302,323
CATALYTIC HYDROCONVERSION OF RESIDUAL STOCKS
Nai Y. Chen, Titusville, N.J., assignor to Mobil Oil Corporation, New York, N.Y.
Filed May 12, 1980, Ser. No. 148,077
Int. Cl.³ C10G *45/10, 47/18*
U.S. Cl. 208—89 **15 Claims**

1. In a process for upgrading a residual petroleum fraction by passing the same in admixture with hydrogen as charge successively through a catalytic hydrotreating zone containing a hydrotreating catalyst and a hydrocracking zone containing a hydrocracking catalyst and separating an upgraded product from the effluent of said hydrocracking zone; the improvement which comprises adding to said residual petroleum fraction a nitrogen containing light aromatic distillate oil boiling in the range of about 400° F. to about 700° F.

4,302,324
DELAYED COKING PROCESS
Nai Y. Chen, Forrest Central Dr., R.D., Titusville, N.J. 08560, and Dennis E. Walsh, 36 Redwood Dr., Richboro, Pa. 18954
Filed Jun. 27, 1980, Ser. No. 163,835
Int. Cl.³ C10G *9/14*
U.S. Cl. 208—131 **9 Claims**

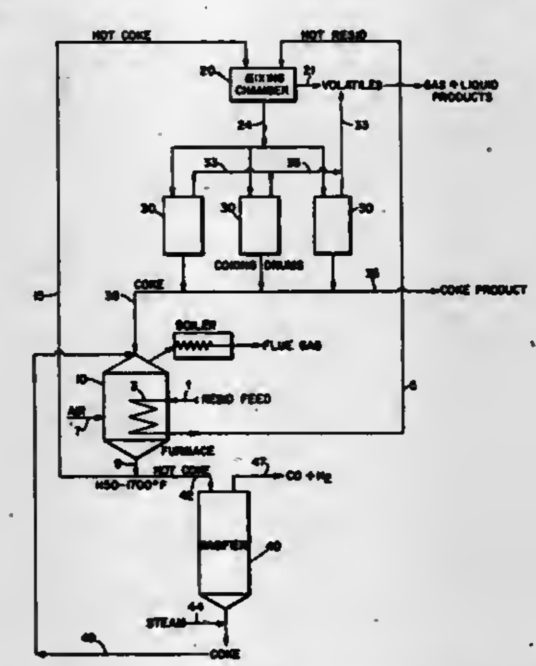

1. In a process for producing delayed petroleum coke comprising heating a normally liquid hydrocarbon coker feedstock in a heating means to a temperature within the range from about 850° to 950° F., charging the resulting heated coker feedstock to a delayed coking drum and maintaining it therein at delayed coking conditions until petroleum coke is formed, and periodically recovering a petroleum coke product from the coke drum; the improvement wherein coke particles at a temperature within the range from about 1150° to 1750° F. are added to the heated coker feedstock to raise the temperature of the resultant mixture by at least 50° F. above the temperature of the heated coker feedstock, the weight ratio of coke particles to heated coker feedstock being in the range from about 0.1 to 2.0.

4,302,325
SOLVENT EXTRACTION PROCESS FOR REREFINING USED LUBRICATING OIL
Laird C. Fletcher, and Richard H. O'Blasny, both of Natchitoches, La., assignors to Delta Central Refining, Inc., Natchitoches, La.
Filed Oct. 28, 1980, Ser. No. 202,015
Int. Cl.³ C10G *21/16*
U.S. Cl. 208—180 **13 Claims**

1. In a process for rerefining used oil containing lubricating oil, where the used oil is rerefined into a heavy lube oil fraction and a light lube oil fraction, the improvement comprising:
(a) mixing and heavy lube oil fraction with an effective amount of tetrahydrofurfuryl alcohol for removing impurities from the heavy lube oil fraction;
(b) separating the heavy lube oil from the tetrahydrofurfuryl alcohol;
(c) mixing the light lube oil fraction with an effective amount of tetrahydrofurfuryl alcohol for removing impurities from the light lube oil fraction; and
(d) separating the light lube oil from the tetrahydrofurfuryl alcohol.

4,302,326
TAR SANDS EMULSION-BREAKING PROCESS
Rene F. Bialek, Calgary, Canada, assignor to Texaco Canada Inc., Calgary, Canada
Filed Mar. 24, 1980, Ser. No. 133,167
Int. Cl.³ C10G *33/04*
U.S. Cl. 208—188 **10 Claims**

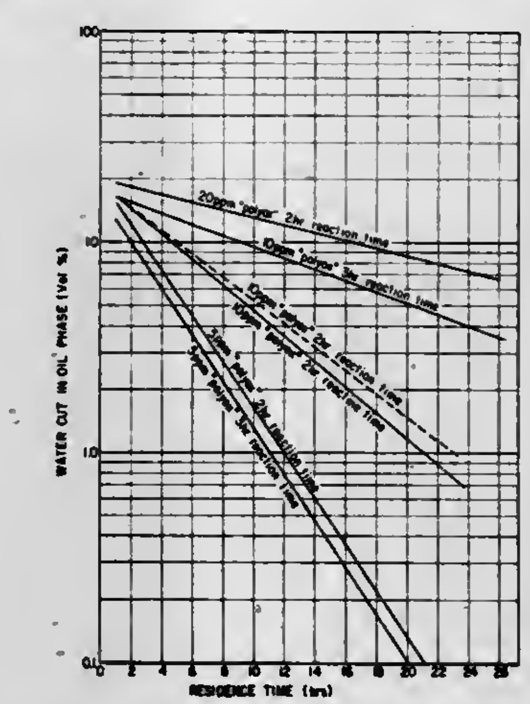

1. A process for recovering oil from a oil-in-water emulsion stabilized by clay and other solids comprising intimately contacting said emulsion with an effective demulsifying amount of a non-ionic, water soluble polyethylene oxide polymeric resin having a molecular weight in the range of 100,000 to 7,000,000; allowing the emulsion to settle for 2 to 4 hours; thereafter diluting said emulsion with an effective oil-dissolving amount of a hydrocarbon diluent in which said oil is soluble, thereby obtaining a mixture of said oil, and said diluent floating on said water.

4,302,327
CENTER FLOW SCREENING APPARATUS
Andrew C. Martin, Middletown, Ohio, assignor to The Black Clawson Company, Middletown, Ohio
Filed Mar. 17, 1980, Ser. No. 130,918
Int. Cl.³ B07B *1/00*
U.S. Cl. 209—240 **6 Claims**

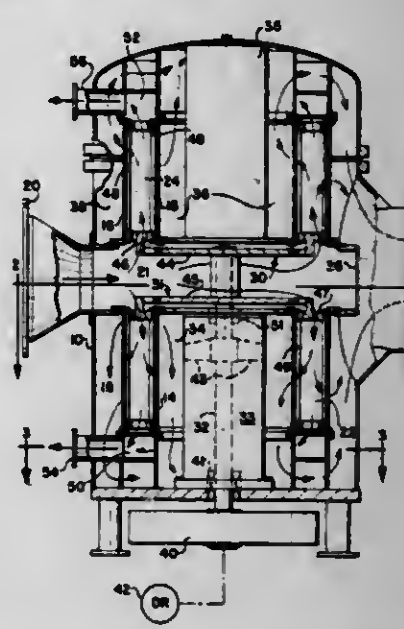

1. A pressurized screening apparatus comprising a housing, means within said housing defining an inlet chamber intermediate and in fluid communication with a first and second stock screening means, said first stock screening means mounted in a fixed position in said housing at a first end thereof for separating a portion of said stock into at least one accepts portion and one rejects portion, said second stock screening means mounted in a fixed position in said housing at the end opposite said first stock screening means and separate therefrom for separating a portion of said stock into at least one accepts portion and one rejects portion, each of said first and second stock screening means including inner and outer generally concentric screenplates defining between them an annular chamber and each of said first and second stock screening means including rotary impeller means mounted for axial rotation within said annular chamber and including at least one foil, means for continuously supplying stock to said inlet chamber for flow therefrom to the area between said inner and outer screenplates on said first and second stock screening means, means for collecting and continuously withdrawing the accepts portions of said stock from said housing, and means for collecting and continuously withdrawing the rejects portions of said stock from said housing.

4,302,328
GEOTHERMAL BRINE TREATMENT
Robert H. Van Note, Orinda, Calif., assignor to Envirotech Corporation, Menlo Park, Calif.
Continuation of Ser. No. 945,160, Sep. 25, 1978, abandoned. This application Apr. 27, 1979, Ser. No. 34,084
Int. Cl.³ C02F *1/52, 1/60*
U.S. Cl. 210—714 **25 Claims**

1. A process for rapidly reducing the concentration of silica in spent geothermal brine at ambient pressure and at a temperature not greater than about 230° F. by treating the brine in a tank having a reaction zone and a clarification zone wherein no chemicals need be added to the spent brine to enhance removal of the silica, said process comprising:
a. introducing the spent geothermal brine into the reaction zone of the tank;
b. allowing the spent geothermal brine to flow from the

reaction zone to the clarification zone of the tank so that solid particles containing silica settle from the brine in the clarification zone to form a body of settled silica-containing particles in the lower part of the clarification zone;

c. removing silica-containing particles from the body of settled particles and mixing the removed particles with the brine in the reaction zone to maintain a substantially uniform distribution of particles of controlled concentration in the reaction zone with the concentration of particles being less than about 3.5% by weight in the reaction zone, thereby to provide seed nuclei to precipitate particles;

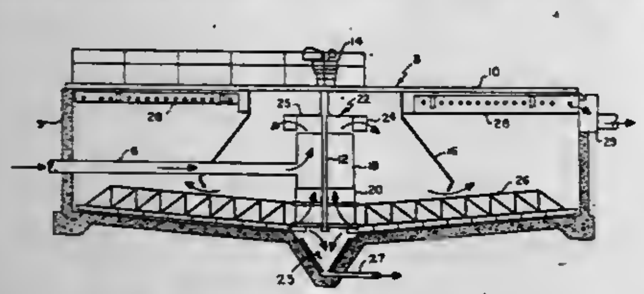

d. removing treated brine from the upper part of the clarification zone; and

e. removing settled particles from the body of particles and discharging the removed particles from the tank.

4,302,329

INSTALLATION FOR THE RECOVERY OF METHANE GAS FROM ORGANIC WASTE

Herbert Pfefferkorn, Arlbergstrasse 101, 69 Bregenz, Vorarlberg, Austria

Filed Dec. 27, 1979, Ser. No. 107,610

Claims priority, application Austria, Jan. 3, 1979, 51/79; Jul. 25, 1979, 5146/79

Int. Cl.³ C02F *3/28*

U.S. Cl. 210—97 **24 Claims**

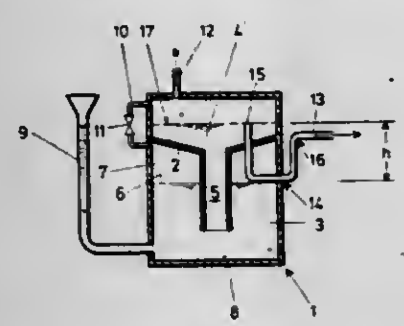

1. An apparatus for recovering methane gas from organic waste in thick sludge form comprising

(a) a chamber sufficiently insulated to allow fermentation of organic waste to take place therein,

(b) means within said chamber for dividing it into a fermentation space in its lower portion for holding fermenting organic waste, a gas collecting space above the fermenting space for trapping methane gas produced by fermenting waste so that gas trapped therein can cumulatively build up pressure on waste in the fermentation space and a post-collection space in the upper portion of the chamber,

(c) communication means between the fermentation space and the post-collection space to allow flow of waste from the fermentation space into the post-collection space in response to gas pressure build up in the gas collection space and to allow flow of waste back into the fermentation space upon release of the pressure,

(d) means for rapidly releasing the pressure of the gas in the gas-collection space to produce flow of waste from the post-collection chamber into the fermentation space of sufficient turbulence to effect break up of any gas impermeable layer which may form on the top of the waste,

(e) means for activating the pressure release means and deactivating the pressure release means upon release of the pressure to allow a re-build up of pressure, and

(f) means for introducing to and withdrawing waste from the chamber, wherein the post-fermentation space has an offtake with a hydraulic, siphon-like closure, and the gas-collecting space is connected with a valve means which periodically transfers the gas from the gas-collecting space into the post-fermentation space and at the same time discharges the sludge in portions through a siphon.

2. The apparatus of claim 1 wherein the activating and deactivating means are responsive to a given level of increased gas pressure in the gas collection space, a time interval or the volume of waste in the fermentation space.

4,302,330

FILTER APPARATUS WITH CLEANING FUNCTION

John Casato, Jr., 1902 Surrey Rd., Oreland, Pa. 19075

Continuation-in-part of Ser. No. 7,965, Jan. 31, 1979, Pat. No. 4,204,961, which is a continuation-in-part of Ser. No. 886,680, Mar. 15, 1978, abandoned. This application Dec. 3, 1979, Ser. No. 99,989

The portion of the term of this patent subsequent to May 27, 1997, has been disclaimed.

Int. Cl.³ B01D *35/16*

U.S. Cl. 210—107 **6 Claims**

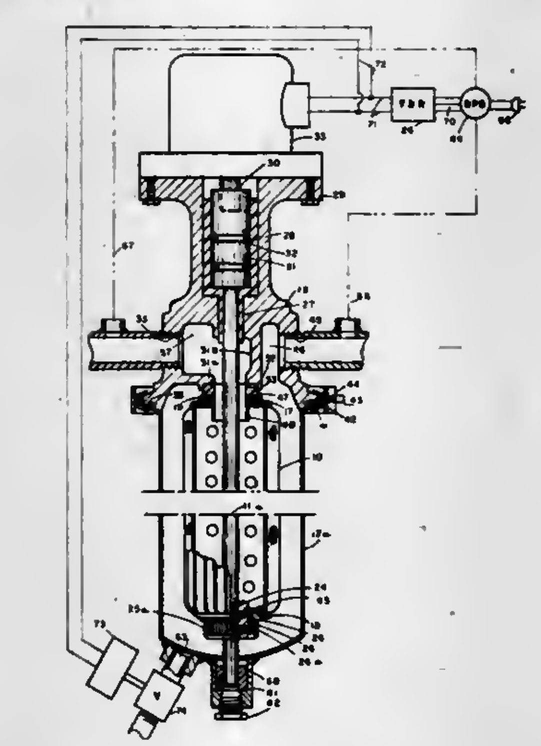

1. A fluid filter apparatus which comprises:

a housing forming an enclosed space and having an inlet opening and an outlet opening,

a filter element in said enclosed space of hollow cylindrical form with a projecting sleeve at both ends defining an inner wall of an annular groove which surrounds the opening at both ends, at least one sleeve having a notch therein,

a gasket positioned in each groove,

a shaft rotatably mounted in the housing and passing therethrough and located at the axis of the filter,

a partition within the housing separating the inlet and the outlet openings and directing fluid from the inlet opening to the exterior of the filter element, said partition having an opening therethrough which communicates with an end opening of the filter element so fluid from the hollow interior flows to the outlet opening,

an annular bearing element of a material of construction which is non-galling relative to the material of construction of the partition and which is disposed between the partition at its opening and the gasket at the communicating end opening of the filter element,

said material of construction of said bearing element also being frictionally drivable by the material of construction of said gasket when said shaft is rotated and frictionlessly bearing on the partition to form a relatively free slippage area between them,

and key means between the shaft and said notch in the projecting sleeve of the filter element to positively rotate the latter by the shaft.

4,302,331

FILTER BUCKET FOR A FLIGHT CONVEYOR

Paul A. Condit, Jr., 1 Sandlilly Ct., The Woodlands, Tex. 77380

Filed May 30, 1980, Ser. No. 154,816

Int. Cl.³ B01D *35/08*

U.S. Cl. 210—160 **4 Claims**

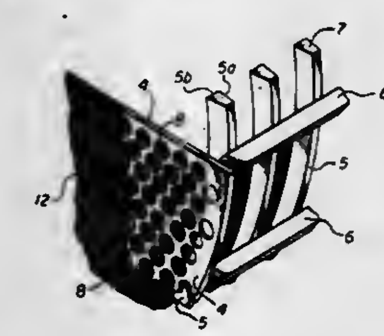

1. An elongate bucket means for use as a flight step on a moving conveyor for filtering refuse from a liquid medium after moving into and out thereof so as to allow the liquid medium to pass through the bucket while retaining the refuse therein comprising:

a plurality of spaced apart elongate wires extending in substantially parallel manner longitudinally of the bucket means, one of said wires defining a lip on said bucket;

a plurality of elongate wires extending laterally of the longitudinally oriented elongate wires and in fixed contacting relation therewith, said longitudinal and lateral elongate wires disposed in laterally concave configuration;

side means for closing the ends of the bucket means and structurally affixing the longitudinal elongate wires into an integral unitary body; and

a plurality of said laterally oriented elongate wires extending beyond the lip of the bucket to define a rake edge on the bucket for engaging and retaining debris contacted by the rake edge.

4,302,332

CENTRIFUGAL THICKENER

Noboru Hayakawa; Akaru Furusato; Toshio Saito, and Tastuyuki Iwai, all of Tokyo, Japan, assignors to Nishihara Environmental Sanitation Research Corp., Ltd., Tokyo, Japan

Filed Jun. 25, 1980, Ser. No. 162,959

Claims priority, application Japan, Jul. 6, 1979, 54-86209; Nov. 12, 1979, 54-157385[U]

Int. Cl.³ B01D *25/16, 33/00*

U.S. Cl. 210—369 **13 Claims**

1. A centrifugal thickener comprising:

a. a substantially truncated-cone shaped hollow rotary body,

a-1. said rotary body having plural liquid through holes which extend from an inner surface to an outer surface thereof,

a-2. said rotary body having at its inner peripheral surface a vertical angle from 40 to 80 degrees,

b. a drive mechanism for rotating said rotary body on an axis thereof,

c. a filter arranged so as to be developed along the inner peripheral surface of said rotary body,

c-1. said filter having a number of openings in size of 10 to 40 microns,

d. a feed pipe for feeding sludge into said filter,

e. a receptacle for receiving a liquid having passed through said filter, and

f. a receptacle for receiving those liquids remaining on said filter when the former is released from said filter.

11. A centrifugal thickener comprising:

a. a substantially truncated-cone shaped hollow rotary body,

a-1. said rotary body having a plurality of liquid through holes which extend from an inner surface to an outer surface thereof,

a-2. said rotary body having at its inner peripheral surface an angle with the vertical of 40 to 80 degrees,

b. a drive mechanism for rotating said rotary body on an axis thereof,

c. a filter arranged so as to be developed along the inner peripheral surface of said rotary body,

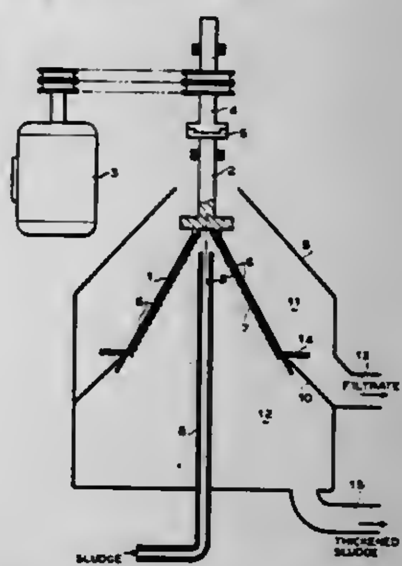

c-1. said filter comprising a filter cloth having a number of openings in size of 10 to 40 microns,

c-2. said filter having a plurality of mass adding means for stretching said filter resulting from displacement thereof outside by means of a centrifugal force acting during rotation thereof with said rotary body,

d. a feed pipe for feeding sludge into said filter,

e. a receptacle for receiving a liquid having passed through said filter, and

f. a receptacle for receiving those liquids remaining on said filter when the former is released from said filter.

4,302,333

BACKPRESSURE GRID PLATE FOR PRESSURE FILTRATION SYSTEM

Klaus Cosack; Wolfgang Hein, and Manfred Neumann, all of Dassel, Fed. Rep. of Germany, assignors to Carl Schleicher & Schull GmbH & Co. KG, Einbeck, Fed. Rep. of Germany

Filed May 11, 1978, Ser. No. 904,885

Claims priority, application Fed. Rep. of Germany, May 26, 1977, 2723924

Int. Cl.³ B01D *35/00*

U.S. Cl. 210—456 **4 Claims**

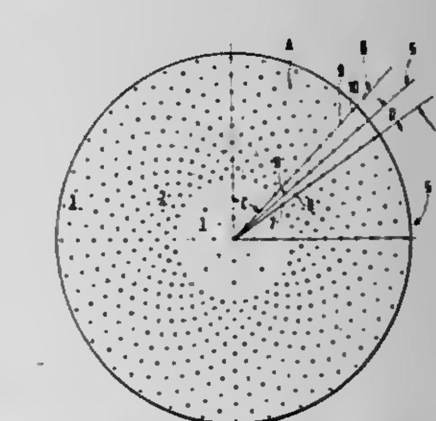

1. In a pressure filtration system of the type comprising a housing with an inlet and outlet for conducting a pressurized fluid to be treated, a filter disposed in said housing between

said inlet and outlet, and a backpressure grid means arranged between said filter and said inlet, the improvement wherein said backpressure grid means comprises a plate containing minute openings which conduct fluid onto said filter, said openings being equal in size and distributed unevenly over the surface area of the plate in such manner that the surface distribution density of a plurality of the openings within an inner impact area of the plate which receives inflowing fluid to be filtered is substantially lower than the surface distribution density of a plurality of the openings within a proximity area of the plate located immediately adjacent to and surrounding the impact area; the surface distribution density of a plurality of the openings within an outer area surrounding said proximity area is lower than that of said proximity area and higher than that of said impact area.

4,302,334

MICROPOROUS POLYMERIC MEMBRANE

Stephen Z. Jakabhazy, Weston, and Leos J. Zeman, Winchester, both of Mass., assignors to Abcor, Inc., Wilmington, Mass.

Division of Ser. No. 42,039, May 24, 1979, Pat. No. 4,248,913, and a continuation-in-part of Ser. No. 966,868, Dec. 6, 1978, abandoned. This application Sep. 21, 1979, Ser. No. 77,592

Int. Cl.³ B01D *31/00*

U.S. Cl. 210—500.2 **23 Claims**

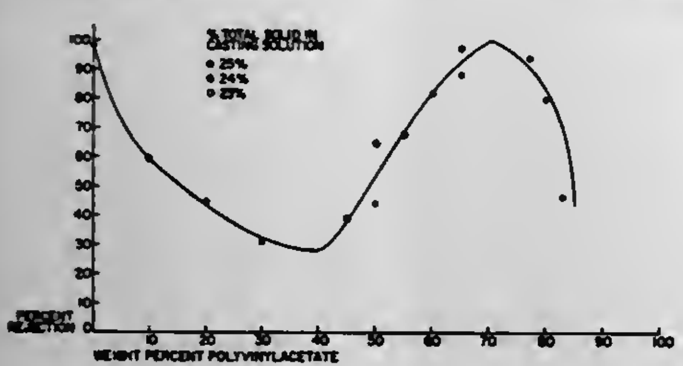

10. An alloy membrane of good mechanical strength and hydrophilic properties, which membrane comprises a hydrophobic vinylidene fluoride matrix polymer intimately blended with from about 20% to 75% by weight of an aqueous, non-leachable polyvinyl alcohol polymer.

4,302,335

RECONDITIONING OF PHOSPHATE ESTER HYDRAULIC CONTROL FLUIDS

Robert E. Habermas, Northville, Mich., assignor to The Detroit Edison Company, Detroit, Mich.

Filed Feb. 13, 1980, Ser. No. 121,010

Int. Cl.³ B01D *15/00*

U.S. Cl. 210—651 **11 Claims**

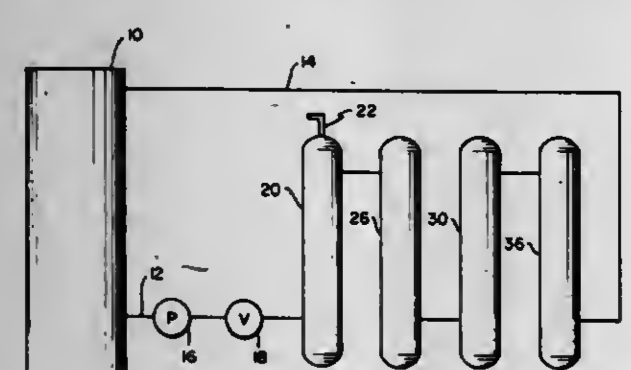

11. The method of keeping a turbine-generator having a reservoir for phosphate ester hydraulic fluid, an electro-hydraulic control system, and connections to supply fluid from the reservoir to the control system in service indefinitely without requiring shut down because of contaminated phosphate ester hydraulic system, which comprises maintaining the water content of the fluid in the reservoir below 0.20% by volume, maintaining the chlorine content below about 170 ppm, and maintaining the acid neutralization number below about 0.14, by continuously withdrawing fluid from the reservoir and establishing a by-pass flow of fluid successively through a coalescer type filter and a mole-sieve filter, and maintaining the by-pass flow of the withdrawn fluid independent of the withdrawal and return flow of the hydraulic fluid from and to the reservoir for operation of the control system in an amount of 0.1–1.0% of the reservoir capacity per minute.

4,302,336

SEMIPERMEABLE COMPOSITE MEMBRANE

Takeyuki Kawaguchi; Yutaka Taketani; Noriaki Sasaki; Hiroyoshi Minematsu; Yuzuru Hayashi, and Shigeyoshi Hara, all of Iwakuni, Japan, assignors to Teijin Limited, Japan

Filed Sep. 4, 1979, Ser. No. 72,044

Claims priority, application Japan, Sep. 6, 1978, 53-108472

Int. Cl.³ B01D *3/00, 13/00*

U.S. Cl. 210—654 **38 Claims**

1. A semipermeable composite membrane comprising a thin semipermeable film of a polymeric material deposited on one side of a microporous substrate, said polymeric material being prepared by crosslinking a soluble polymer containing at least 30 mole% of a recurring unit of the formula

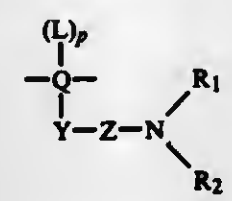
(I)

wherein

Q represents an organic radical containing 2 to 30 carbon atoms and having a valence of (3+p) which optionally contains a heteroatom selected from the group consisting of oxygen, sulfur, nitrogen and halogen atoms;

Y is bonded to the carbon atom in group Q and represents a direct bond, an alkylene group containing 1 to 3 carbon atoms or an unsubstituted or substituted phenylene group;

Z represents

$$-\overset{\overset{\displaystyle O}{\|}}{C}- \quad \text{or} \quad -SO_2-;$$

R_1 represents a hydrogen atom, or a monovalent organic radical containing 1 to 20 carbon atoms which may contain an amino group containing 1 to 2 active hydrogen atoms and a heteroatom selected from the group consisting of oxygen, nitrogen and halogen atoms;

R_2 represents an amino group containing 1 to 2 active hydrogen atoms or a monovalent organic radical containing 1 to 20 carbon atoms contains at least one amino group containing 1 to 2 active hydrogen atoms and may contain a heteroatom selected from the group consisting of oxygen, nitrogen and halogen atoms;

R_1 and R_2, together with the nitrogen atom to which they are bonded may represent a 5- to 18-membered nitrogen-containing heterocyclic ring which contains at least one amino group having one active hydrogen atom;

when group Y represents a direct bond and group Z represents

$$-\overset{\overset{\displaystyle O}{\|}}{C}-,$$

R_1 may represent

$$-\overset{\overset{\displaystyle O}{\|}}{C}-$$

bonded to that carbon atom of the group Q which is bonded, either directly or through 1 or 2 carbon atoms, to the carbon atom to which the group Y is bonded;

p is 0, 1 or 2; and

when p is 1 or 2, L represents the group

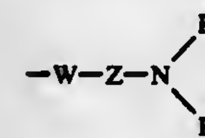

in which W represents a direct bond or an alkylene group containing 1 to 3 carbon atoms and Z, R_1 and R_2 are as defined above, and having at least 0.2 milliequivalent, per gram of said polymer, of an amino group containing 1 or 2 active hydrogen atoms, with a polyfunctional compound containing at least two functional groups capable of reacting with the amino group having 1 or 2 active hydrogen atoms.

4,302,337

SEPARATION OF OIL FROM WATER

Edwin G. Larson, Midland; Daniel H. Haigh, Sanford, and Richard H. Hall, Midland, all of Mich., assignors to The Dow Chemical Company, Midland, Mich.

Filed Jan. 10, 1977, Ser. No. 758,280

Int. Cl.³ C02F *1/28*

U.S. Cl. 210—662 **10 Claims**

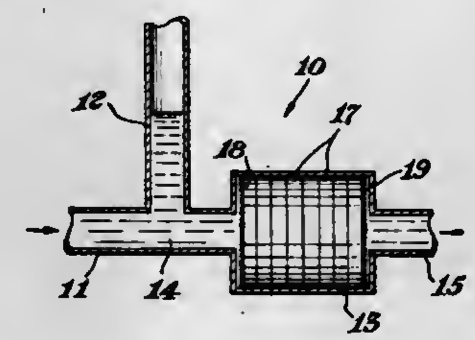

1. A method for the removal of organic liquids or oils from an aqueous stream, the steps of the method comprising passing an aqueous stream containing less than 1000 parts per million by weight of an organic liquid or oil, through an organic liquid or oil-sorbing bed, the sorbing bed comprising at least a first foraminous body which permits flow of water therethrough, the foraminous body having an organic liquid or oil-imbibing coating on the surface thereof, the organic liquid or oil-imbibing coating comprising a generally coherent mass of organic liquid or oil-imbibing latex particles, the latex particles being of a cross-linked polymer which is organic liquid or oil-swellable and organic liquid or oil-insoluble, the latex particles being swellable in organic liquid or oil from about 2 to 50 times their unswollen volume, the amount of the organic liquid or oil-swellable latex particle coating being sufficient that on swelling with organic liquid or oil the volume is sufficient to plug interstitial spaces within the foraminous body and prevent flow of water therethrough.

4,302,338

APPARATUS FOR METERING AND/OR DISTRIBUTING LIQUID MEDIA

Rainer Pfohl, Heusenstamm; Martin Grtischke, Karben, and Jürgen Schubert, Bad Homburg, all of Fed. Rep. of Germany, assignors to Metallgesellschaft Aktiengesellschaft, Frankfurt, Fed. Rep. of Germany

Filed Jul. 11, 1979, Ser. No. 56,491

Claims priority, application Fed. Rep. of Germany, Jul. 28, 1978, 2833155

Int. Cl.³ C02B *3/08*

U.S. Cl. 210—752 **6 Claims**

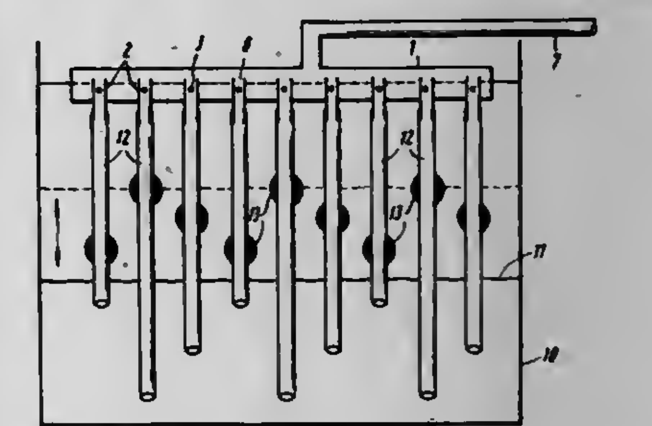

1. A process for supplying a liquid treating agent to a flowing stream which flows in a generally horizontal path which comprises passing said liquid stream along said generally horizontal path in said channel, feeding said treating agent into a substantially horizontal manifold at varying amounts, said manifold being connected to a plurality of generally vertical discharge conduits which depend from said manifold, said discharge conduits comprising discharge tubes which are open at both ends and are liquid-tightly fitted in and depend from said manifold, each of said tubes having a top end disposed in an upper portion of the manifold and at least one lateral opening disposed above a joint between said tube and said manifold, and within said manifold, each of said discharge tubes having a hose attached to its lower end which hoses have outlet openings, said outlet openings being substantially uniformly distributed over the cross-section of flow of fluid of said flowing liquid, said hoses disposed in said flowing liquid such as to be pendulum-like oscillatable by said flowing liquid, whereby when liquid treating agent is passed through said manifold in an amount sufficient to pass through said lateral opening, but not through said top end, said treating agent is uniformly dispensed in said flowing liquid at a first dosage level and when said liquid treating agent is passed through said manifold in an amount sufficient to pass both through said lateral opening and said top ends, said treating agent is uniformly dispensed in said flowing liquid at a second dosage level.

4,302,339

BEACH CLEANING METHOD

Charles C. Cloutier, P.O. Box 885, Morgan City, La. 70380

Filed Jul. 7, 1980, Ser. No. 166,666

Int. Cl.³ B01D *21/00*

U.S. Cl. 210—776 **6 Claims**

1. A method of cleaning a beach by separating oil, oil residues and other floatable debris from the beach sand, comprising:

introducing a continuous flow of water to a localized area of the beach;

supplying said flow of water at sufficiently high volume to flood the localized area of the beach and to produce a pool of water at the surface of the porous sand of the beach, said water being supplied at low velocity and low pressure so that the water in said pool flows sufficiently slowly to produce a lifting action on any buoyant materials in or on the sand within the area being flooded, thereby causing oil or residues, and other floatatable debris to rise toward the

surface of the sand and to float in said pool of water, said water further being supplied under sufficiently low pressure to minimize the entrainment of said in said water;
directing said flow of water to cause oil, oil residues and other floatatable debris to collect near the center of said pool;
skimming said pool of water to remove said oil, oil residue and other floating debris together with a small quantity of water and incidental water-entrained sand from the localized area while said area is still flooded;

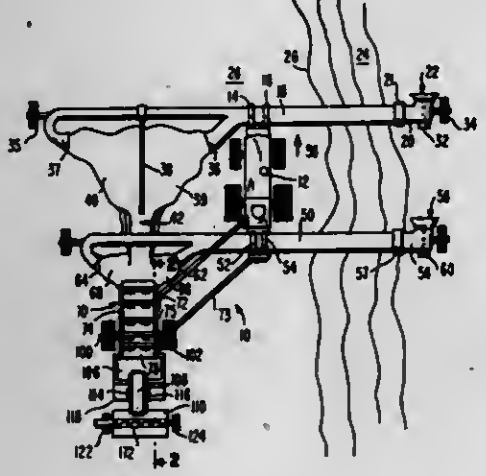

separating in said skimmer the floating oil, oil residues and other debris from the water and entrained sand and returning the water and entrained sand to said localized beach area; and
advancing the localized area of flooding along the beach to continuously and progressively separate oil, oil residues and other floatatable debris from the sand of the beach without removing the sand from the beach and without environmental damage to the beach.

4,302,340
FLAME RETARDANT POLYOL COMPOSITIONS AND THEIR PREPARATION
Stanley R. Sandler, Springfield, and Mabel M. Chen, Marple, both of Pa., assignors to Pennwalt Corporation, Philadelphia, Pa.
Filed Aug. 8, 1979, Ser. No. 64,656
Int. Cl.³ C09K *3/28*
U.S. Cl. 252—609 **12 Claims**

1. A process for preparing an anhydrous liquid flame retardant composition in a polyol comprising reacting 0.5 to 2.0 moles of chloral per 0.5 to 1.5 moles of a member selected from the group consisting of urea, diethanolurea, dipropanolurea, thiourea, sulfamide and mixtures thereof in the presence of a polyhydroxy composition having 2 to 8 hydroxy groups and in the absence of a catalyst.

8. The composition prepared by the process of claim 1.

4,302,341
GELLED AQUEOUS WELL TREATING FLUIDS
Jimmie L. Watson, Duncan, Okla., assignor to Halliburton Company, Duncan, Okla.
Filed Aug. 9, 1979, Ser. No. 65,165
Int. Cl.³ E21B *43/00, 33/13*
U.S. Cl. 252—8.55 R **9 Claims**

1. A blend of solids for use as an additive to water to form an aqueous spacer fluid for treating a well, said blend comprising:
an angular particulate material for scrubbing surfaces in said well, wherein said angular material has a specific gravity below about 2 and is selected from the group consisting of nut hulls, perlite fly ash, coal, lignite, and mixtures thereof and wherein said particulate material has a size distribution such that a major portion of said material passes through a 14 mesh screen and is retained on a 20 mesh screen;
a barium sulfate weighting material to increase the density of the fluid;
a first hydratable polymer for increasing the viscosity of said fluid at temperatures within a first lower range of about ambient −150° F. to a level whereby said angular particulate material is substantially suspended in said fluid, wherein said first hydratable polymer is selected from the group consisting of guar gum and derivatives thereof, cellulose and derivatives thereof, and mixtures of such polymers in an amount of about 1 to 10 parts per 100 parts by weight of said blend; and
locust bean gum as a second hydratable polymer for maintaining the viscosity of said fluid at said level whereby said angular particulate material is substantially suspended in said fluid at temperatures with a second higher range of about 150° to 300° F., wherein said second hydratable polymer is present in an amount of about 0.1 to 4 parts per 100 parts by weight of said blend.

4,302,342
PROCESS FOR THE PREPARATION OF DETERGENT DISPERSANTS OF HIGH ALKALINITY FOR LUBRICATING OILS AND THE PRODUCT OBTAINED THEREFROM
Bernard Demoures, Puteaux, and Jean-Louis Le Coent, Le Havre, both of France, assignors to Orogil, Courbevoie, France
Filed Jun. 19, 1979, Ser. No. 50,089
Claims priority, application France, Jun. 26, 1978, 78 18945
Int. Cl.³ C10M *1/40*
U.S. Cl. 252—33.2 **24 Claims**

1. A process of preparing detergent-dispersant compositions containing at least about 2 percent magnesium, from an alkylphenol, an alkaline-earth metal alkylbenzenesulfonate, an alkylene glycol, sulfur, and carbon dioxide, which process comprises:
(1) reacting sulfur at a temperature between about 100° C. and 190° C., with an alkylphenol bearing one or more C_6–C_{60} alkyl substituents, in the presence of a dilution oil, a magnesium and/or calcium alkylbenzenesulfonate of a molecular weight of more than about 300 and a TBN of less than or equal to about 150, an alkaline-earth component selected from among calcium hydroxide, mixtures of magnesium oxide, and calcium hydroxide, and an alkali metal hydroxide and an alkylene glycol;
(2) superalkalinizing and carbonating the resultant sulfurized medium with magnesium oxide or a mixture of magnesium oxide and calcium hydroxide, in the presence of an alkylene glycol, at a temperature of between about 100° C. and 250° C., with carbon dioxide;
(3) at any stage of the superalkalinization/carbonation step, treating the reaction medium with 0 to about 10 percent by weight of water, referred to the weight of the said medium, at a temperature between about 100° C. and 150° C.;
(4) removing the excess alkylene glycol and recovering the detergent-dispersant composition of high alkalinity.

4,302,343
ROTARY SCREW COMPRESSOR LUBRICANTS
Robert Carswell, and Philip W. McGraw, both of Lake Jackson, Tex., assignors to The Dow Chemical Company, Midland, Mich.
Continuation-in-part of Ser. No. 26,269, Apr. 2, 1979, abandoned. This application Jun. 2, 1980, Ser. No. 155,364
Int. Cl.³ C10M *1/40, 3/34, 5/22, 7/38*
U.S. Cl. 252—33.4 **20 Claims**

1. A lubricant composition comprising,
(A) about 15 to 45 weight percent of an ester of a hindered polyhydric alcohol having 3 to 8 hydroxyl groups with one or more alkanoic acids having 4 to 18 carbon atoms, and
(B) about 85 to 55 weight percent of one or more polyether polyol compounds which have a flash point greater than 375° F. and which have the formula

$$Z\!\left[\!\!\begin{array}{c}(\underset{\substack{|\\R^1}}{CH}-\underset{\substack{|\\R^2}}{CH}-O)_n-R^3\end{array}\!\!\right]_m$$

where
Z is the residue of a non-amine initiator compound having 1–8 active hydrogens,
R^1 is hydrogen or methyl when R^2 is methyl,
R^2 is hydrogen, methyl, or ethyl when R^1 is hydrogen,
n is a number having an average value which will give a molecular weight range from about 400 to about 5000,
m is an integer having a value of from 1 to about 8,
R^3 is hydrogen or an alkyl group of 1 to 6 carbon atoms.

4,302,344
LOOSE-FILL, THERMAL INSULATION
David L. Ruff, Torrance, and N. Gokul Nath, Carson, both of Calif., assignors to Grefco, Inc., Bala Cynwyd, Pa.
Filed Feb. 22, 1980, Ser. No. 123,567
Int. Cl.³ C04B *43/00, 43/08, 43/14*
U.S. Cl. 252—62 **13 Claims**

1. A fire-resistant, loose-fill, thermal insulation comprising from about 10% to about 99% by volume celluose fiber, from about 1% to 90% by volume expanded perlite particles, and a tacky resin having a solid content from about 0.25% to about 10% by weight of the perlite, said particles being rendered tacky by said resin, said insulation having a bulk density less than about 2 pcf and a K-factor less than about 0.30.

8. A fire-resistant, loose-fill, thermal insulation comprising about 55 to 90% by weight expanded perlite particles; about 10 to 45% by weight cellulose fiber; and a tacky resin having a solid content of about 0.5 to 10% by weight of the combined weight of the perlite and the fiber, said particles being rendered tacky by said resin and said insulation having a bulk density of about 4.5 pcf, a K-factor of about 0.275 or less, a smoke density of about 5 and a flame spread less than about 10.

4,302,345
FLAME RETARDING CELLULOSIC MATERIALS WITH SODIUM OR POTASSIUM THIOCYANATE
Robert J. McCarter, Gaithersburg, Md., assignor to The United States of America as represented by the Secretary of Commerce, Washington, D.C.
Filed Sep. 12, 1980, Ser. No. 186,871
Int. Cl.³ B27K *3/02;* **C09K** *3/28*
U.S. Cl. 252—62 **39 Claims**

1. A flame resistant cellulosic insulation material comprising:
a cellulosic fibrous mass of sufficiently low density to provide insulating effects;
a compound selected from the group consisting of sodium thiocyanate, potassium thiocyanate and mixtures thereof.

4,302,346
EROSION-INHIBITED FUNCTIONAL FLUID
Hugh S. MacKinnon, Oakland, Calif., assignor to Chevron Research Company, San Francisco, Calif.
Filed Jun. 28, 1979, Ser. No. 53,111
Int. Cl.³ C09K *3/00*
U.S. Cl. 252—75 **8 Claims**

1. An erosion inhibited phosphate ester based functional fluid comprising a major amount of a phosphate ester and from 10 to 50,000 parts per million by weight of phosphate ester of a perfluorinated anionic surfactant selected from the group consisting of the di- and trivalent metal salts of a perfluoroalkane sulfonic acid or perfluoroalkane disulfonic acid wherein the alkane is from 1 to 18 carbon atoms.

4,302,347
ALL-PURPOSE LIQUID ABRASIVE CLEANER
Alan Straw, Macclesfield; Edwin Cropper, Oldham, and Alan Dillarstone, Bramhall, all of England, assignors to Colgate-Palmolive Company, New York, N.Y.
Filed Oct. 10, 1978, Ser. No. 949,935
Claims priority, application United Kingdom, Oct. 14, 1977, 42864/77
Int. Cl.³ C11D *3/14, 9/20*
U.S. Cl. 252—116 **11 Claims**

1. A stable, opaque, liquid hard surface cleaning composition comprising, by weight, from 1% to 20% of a water-insoluble, particulate, inorganic abrasive having a particle size in the range of 1 to 40 microns; from 3% to 12% of a water-soluble, synthetic, organic, anionic detergent salt of a sulfuric reaction product having a C_6–C_{22} alkyl group and either a sulfonic acid or sulfuric acid radical in its molecular structure; from 2% to 4% of a water-soluble condensation product of a C_8–C_{22} alkanol and 2 to 15 moles of ethylene oxide, the weight ratio of anionic detergent to nonionic detergent being from 1.75:1 to 3:1; from 1% to 15% of water-soluble inorganic or organic detergent builder salt, the weight ratio of builder salt to total detergent being in the range of 1:4 to 2:1; and an aqueous medium; the proportions of the components being so adjusted within the specified ranges that some of the detergent is present in liquid crystal form and the abrasive is maintained in stable suspension, said composition having a viscosity in the range of 350 to 1500 centipoises.

8. A composition according to claim 1 which includes in addition up to 8% by weight of urea.

4,302,348
HARD SURFACE CLEANING COMPOSITIONS
Luz P. Requejo, Cincinnati, Ohio, assignor to The Drackett Company, Cincinnati, Ohio
Filed Sep. 23, 1980, Ser. No. 189,986
Int. Cl.³ C11D *7/16, 3/06*
U.S. Cl. 252—135 **8 Claims**

1. A cleaning composition for hard surfaces consisting essentially by weight of:
(a) from about 1.85% to about 10.00% of at least one organic solvent which is a lower aliphatic monohydric alcohol having from about 2 to about 4 carbon atoms and having a boiling point within the range of from about 75° C. to about 100° C.;
(b) from about 1.15% to about 10.00% of at least one organic solvent having a boiling point of between about 120° C. to about 250° C. and selected from the group consisting of alkylene and polyalkylene glycols having from about 2 to 6 carbon atoms, and the lower alkyl ethers, having about 1 to 4 carbon atoms, of alkylene or polyalkylene glycols containing a total of from about 3 to 8 carbon atoms;
(c) from about 0.1% to about 2.5% of a first surfactant which is an anionic or nonionic surfactant selected from the group consisting of linear primary alcohols having from about 9 to about 11 carbon atoms reacted with an average of 2.5 moles of ethylene oxide, alkyl aryl sulfonates, polyethylene oxide ethers of fatty alcohols, sodium lauryl sulfate, octyl phenoxy polyethoxy ethanol, sodium lauryl ether sulfate, and sodium dodecyl benzene sulfonate;
(d) from about 0.011% to about 5.000% of a second surfactant which is an anionic or nonionic fluorinated hydrocarbon surfactant selected from the group consisting of:
(i) anionic fluorinated hydrocarbon surfactants wherein the fluorinated hydrocarbon portion has a branched chain structure and having aliphatic per-fluorocarbon groups at one end thereof;
(ii) nonionic fluorinated hydrocarbon surfactants having a

fluorinated hydrocarbon portion exhibiting a branched structure and having the formula:

$R_f(OCH_2CH_2)_nOR_f$

wherein R_f is C_8F_{15}, $C_{10}F_{19}$ or $C_{12}F_{23}$ and n is an integer from 10 to 30;

(iii) nonionic fluorinated hydrocarbon surfactants wherein the fluorinated hydrocarbon portion exhibits a branched structure and having the formula:

$R_f(OCH_2CH_2)_mOR$

wherein R_f is as in (ii), R is a lower alkyl and m is an integer from 2 to 10; and

(iv) anionic fluorinated hydrocarbon surfactants wherein the fluorinated hydrocarbon portion exhibits a straight chain structure and having aliphatic per-fluorocarbon groups at one end of the chain thereof;

(e) from about 0.02% to about 2.0% of an alkali-metal polyphosphate selected from the group consisting of the sodium or potassium salts of tripolyphosphate, hexametaphosphate, and tetra-sodium or potassium pyrophosphate;

(f) from about 0.15% to about 3.00% of a fugitive alkaline material which can be ammonia, or morpholine; and

(g) the balance of said composition being water.

4,302,349

ADDUCTS OF ALCOHOLS AND OLEFIN OXIDES, SUITABLE FOR REDUCING THE INTERFACIAL SURFACE TENSION OF OILY PHASES WITH RESPECT TO WATER

Kurt Kosswig, and Ekkehard Wienhoefer, both of Marl, Fed. Rep. of Germany, assignors to Chemische Werke Huls, A.G., Marl, Fed. Rep. of Germany

Filed May 5, 1980, Ser. No. 146,986

Claims priority, application Fed. Rep. of Germany, Jun. 26, 1979, 2925628

Int. Cl.³ C07C *41/04, 43/10, 43/20;* **C11D** *1/722*

U.S. Cl. 252—174.21 **11 Claims**

1. A compound of the formula

$$R[O-(CH_2CH_2O)_x-(\underset{R'}{CH}-\underset{R''}{CH}-O)_y-H]_z$$

wherein

z is 1 or 2,

R is, for z=1, alkyl, aralkyl, or alkylaryl, each of 8–22 carbon atoms in the alkyl chain, or hydroxyalkyl of 2–22 carbon atoms, and, for z=2, alkylene or arylalkylene, each of 4–18 carbon atoms in the alkyl chain, wherein, aryl in each case is phenyl or phenyl substituted by methoxy, acetoxy, cyano, nitro, chloro or fluoro,

R' and R'' each independently is hydrogen or C_1–C_{20}-alkyl wherein R' and R'' are not simultaneously hydrogen and R' and R'' together have a total of 8–20 carbon atoms,

x is 10–40, and

y is 1.2–5,

said compound being essentially water insoluble, possessing essentially no cloud point and being effective to lower the interfacial surface tension of an oil phase with respect to water when present in the oil phase in a small concentration.

10. A detergent composition comprising an amount of a compound of claim 1 effective to lower the interfacial surface tension of an oily phase with respect to water and an adjuvant conventional in detergent compositions.

4,302,350

METHOD AND COMPOSITION TO INHIBIT STAINING OF PORCELAIN SURFACES BY MANGANESE

Robert H. Callicott, West Chester, Ohio, assignor to The Procter & Gamble Company, Cincinnati, Ohio

Filed Apr. 9, 1979, Ser. No. 28,293

Int. Cl.³ C11D *3/37*

U.S. Cl. 252—174.23 **4 Claims**

1. A composition adapted to deliver to toilet bowl water an ingredient which inhibits manganese staining of surfaces of said toilet bowl when said water contains at least 50 ppb manganese II ions and an oxidizing agent which would oxidize said manganese II ions to form staining manganese IV ions, said composition itself being free of said oxidizing agent and substantially free of phosphate esters; said composition comprising:

A. 5% to 50% of a material adapted to inhibit manganese staining, consisting essentially of a partially hydrolyzed, water-soluble polyacrylamide material having an average molecular weight of about 2000 to about 10,000 atomic mass units;

B. 50% to 90% of a water-soluble surfactant which is resistant to degradation by said oxidizing agent; and

C. 0% to 56% of optional ingredients.

4,302,351

COMPOUNDS CONTAINING ISOCYANURIC GROUPS AND TERMINALLY BLOCKED ISOCYANATE GROUPS

Rainer Gras, and Elmar Wolf, both of Herne, Fed. Rep. of Germany, assignors to Chemische Werke Huls Aktiengesellschaft, Marl, Fed. Rep. of Germany

Continuation of Ser. No. 889,217, Mar. 23, 1978, abandoned. This application Apr. 11, 1980, Ser. No. 139,399

Claims priority, application Fed. Rep. of Germany, Mar. 24, 1977, 2712931

Int. Cl.³ C08G *18/80;* **C09K** *3/00;* **C07D** *251/34*

U.S. Cl. 252—182 **5 Claims**

1. A mixture containing isocyanurate and blocked isocyanate groups which comprises:

at least 10% by weight of an isocyanurate derived from a polyisocyanate selected from the group consisting of 3-isocyanatomethyl-3,5,5-trimethyl-cyclohexylisocyanate, 2,4,4-trimethyl-hexamethylenediisocyanate, and 2,2,4-trimethyl-hexamethylenediisocyanate, containing at least two isocyanate groups blocked with ε-caprolactam; and

a monomeric polyisocyanate blocked with ε-caprolactam in such amounts as necessary to complete 100% by weight of said mixture; and wherein the unblocked NCO-group content of said mixture is less than 0.5% by weight.

4,302,352

FLUOROPHENYLCYCLOHEXANES, THE PREPARATION THEREOF AND THEIR USE AS COMPONENTS OF LIQUID CRYSTAL DIELECTRICS

Rudolf Eidenschink, Dieburg, and Ludwig Pohl, Darmstadt, both of Fed. Rep. of Germany, assignors to Merck Patent Gesellschaft mit Beschränkter Haftung, Darmstadt, Fed. Rep. of Germany

Filed Feb. 22, 1980, Ser. No. 123,628

Claims priority, application Fed. Rep. of Germany, Feb. 24, 1979, 2907332

Int. Cl.³ C09K *3/34;* **G02F** *1/13;* **C07C** *49/43, 49/80, 23/18*

U.S. Cl. 252—299.63 **9 Claims**

1. A fluorophenyl-trans-cyclohexane of the formula

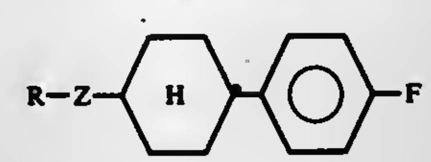

wherein R is alkyl of 1 to 17 carbon atoms and Z is carbonyl or methylene.

4,302,353

METHOD FOR THE PRODUCTION OF SYNTHESIS GAS

Gerd Escher, Gelsenkirchen-Buer; Johann Harjung, Dorsten, and H. Peter Wenning, Gelsenkirchen-Buer, all of Fed. Rep. of Germany, assignors to Veba Oel AG, Gelsenkirchen-Buer, Fed. Rep. of Germany

Continuation of Ser. No. 904,372, May 10, 1978, abandoned. This application Sep. 27, 1979, Ser. No. 79,582

Claims priority, application Fed. Rep. of Germany, May 11, 1977, 2721047

Int. Cl.³ C10J *3/46*

U.S. Cl. 252—373 **9 Claims**

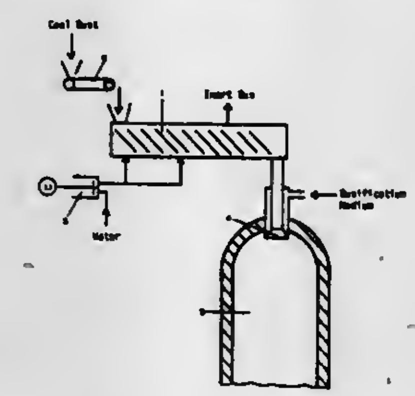

1. A method for the continuous production of synthesis gas comprising carbon monoxide and hydrogen by autothermally gasifying solid combustibles in the presence of a gasification medium, in a pressure reactor at a temperature in the range of 800°–1700° C. and a pressure of from 10–150 bar, which comprises:

introducing into a screw machine which contains two parallely ordered shafts a finely divided solid combustible;

moistening and intimately mixing said solid combustible with 2 to 30% by weight of water;

degasing and compressing said moist solid combustible to a pressure higher than that of the reactor;

adding the gas-tight, compressed and moist solid combustible to a reaction chamber through a burner, where said combustible is brought into contact with a gasification medium; thereby

evaporating the water in said compressed and moist solid combustible and producing a comminuted dispersion of said solid combustible in a mixture of said gasification medium and said water vapor;

reacting said combustible dispersion to give a raw synthesis gas and

removing said raw synthesis gas from said reactor.

4,302,354

MIXTURES OF VICINAL AMINOALKANOLS, PROCESS OF PREPARATION, AND THEIR APPLICATION AS CORROSION INHIBITORS

Wolfgang Giede, Hilden; Karlheinz Koch, Haan; Gerhard Kolaczinski, Dusseldorf-Oberkassel; Wolfgang Rupilius, Dusseldorf, and Werner Stein, Erkrath-Unterbach, all of Fed. Rep. of Germany, assignors to Henkel Kommanditgesellschaft auf Aktien, Düsseldorf-Holthausen and Deutsche Gold- und Silber-Scheideanstalt, Frankfurt am Main, both of, Fed. Rep. of Germany

Filed May 5, 1976, Ser. No. 683,322

Claims priority, application Fed. Rep. of Germany, May 7, 1975, 2520267

Int. Cl.³ C09K *3/00*

U.S. Cl. 252—392 **6 Claims**

1. Mixtures of vicinal aminoalkanols selected from the group consisting of (1) compounds having the formula:

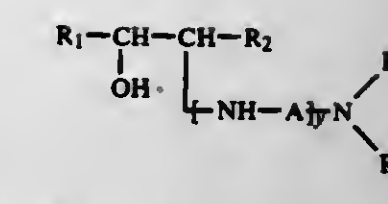

wherein R_1 and R_2 are alkyl and the sum of the carbon atoms in R_1 and R_2 is from 13 to 16, A is a member selected from the group consisting of alkylene having from 2 to 6 carbon atoms and methylalkylene having from 3 to 7 carbon atoms, y is an integer from 1 to 3, and R_4 and R_5 are individually members selected from the group consisting of hydrogen, alkyl having from 1 to 4 carbon atoms and hydroxyalkyl having from 2 to 4 carbon atoms, and (2) their organic carboxylic acid salts, said mixtures having at least two different and adjacent chain lengths of

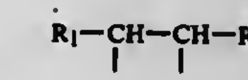

with the proviso that the vicinal amino and hydroxyl substituents are distributed statistically over the chain length.

4,302,355

PLATELET REFERENCE CONTROL

James E. Turner, Jr., Morristown, and Michael B. Kenoff, Hackettstown, both of N.J., assignors to Warner-Lambert Company, Morris Plains, N.J.

Continuation of Ser. No. 23,130, Mar. 23, 1979, abandoned, which is a continuation-in-part of Ser. No. 821,063, Aug. 1, 1977, abandoned. This application Mar. 4, 1980, Ser. No. 130,781

Int. Cl.³ C09K *3/00;* **G01N** *33/16*

U.S. Cl. 252—408 **8 Claims**

1. A method of preparing a stable suspension of unaggregated blood platelets which comprises adding dichromate salt to an amount of platelet rich plasma and adding glutaraldehyde to the dichromatic-platelet rich plasma mixture to a final concentration of between 0.2–0.3% (w/v) of dichromate salt and between 0.05–0.15% (w/v) glutaraldehyde and incubating the resultant suspension at a temperature of 30°–40° C. for an effective period of time.

3. A suspension of blood platelets made in accordance with claim 1.

4,302,356

PROCESS FOR SEPARATING ISOBUTENE FROM C_4 STREAMS

Lawrence A. Smith, Jr., Houston, Tex., assignor to Chemical Research & Licensing Co., Houston, Tex.

Continuation of Ser. No. 928,397, Jul. 27, 1978, Pat. No. 4,242,530. This application Jul. 11, 1980, Ser. No. 168,658

The portion of the term of this patent subsequent to Jul. 29, 1997, has been disclaimed.

Int. Cl.³ B01J *31/08, 35/02*

U.S. Cl. 252—426 **4 Claims**

1. A catalyst system for use in a reaction-distillation column comprising a plurality of closed cloth pockets containing acid cation exchange resin, arranged and supported by wire mesh intimately associated with said closed cloth pockets.

4,302,357

CATALYST FOR PRODUCTION OF ETHYLENE FROM ETHANOL

Mitsuo Kojima; Takahiro Aida, both of Niitsu, and Yukio Asami, Yokohama, all of Japan, assignors to Nikki Chemical Co., Ltd., Tokyo, Japan

Filed Apr. 23, 1980, Ser. No. 142,910

Claims priority, application Japan, May 31, 1979, 54-68362

Int. Cl.³ B01J *21/04, 27/18*

U.S. Cl. 252—437 **8 Claims**

1. A catalyst which consists essentially of high purity activated alumina having a purity of at least 99.6 wt. % and containing not more than 0.05 wt. % of alkali metal, calculated as Na_2O, not more than 0.05 wt. % of sulfur, calculated as SO_3, not more than 0.05 wt. % of iron, calculated as Fe_2O_3, and not more than 0.05 wt. % of silicon, calculated as SiO_2, said high purity activated alumina having incorporated therein from 0.05 to 5 wt. %, based on the weight of said high purity activated alumina, of at least one phosphate of a metal selected from the group consisting of the metals of Group II*a*, Group II*b*, Group III*a* and Group IV*b* of the Periodic Table of the Elements.

4,302,358

REFORMING WITH AN IMPROVED PLATINUM-CONTAINING CATALYST

Regis J. Pellet, Wheaton, Ill., and Ralph J. Bertolacini, Chesterton, Ind., assignors to Standard Oil Company (Indiana), Chicago, Ill.

Filed Oct. 22, 1979, Ser. No. 86,707

Int. Cl.³ B01J *27/08, 27/10, 23/64*

U.S. Cl. 252—441 **25 Claims**

1. A catalyst comprising a physical particle-form mixture of a Component A and a Component B, said Component A comprising at least one Group VIII noble metal deposed on a solid catalyst support material providing acidic catalytic sites and said Component B comprising rhenium or a compound of rhenium deposed on a solid catalyst support material, said catalyst having been prepared by thoroughly and intimately blending finely-divided particles of Component A and Component B to provide a thoroughly-blended composite, said finely-divided particles having a particle diameter that is less than 100 mesh (150 microns), and forming subsequently said composite into particles having a size that is greater than 100 mesh (150 microns) and being suitable for use in a hydrocarbon conversion reaction zone.

4,302,359

PROCESS FOR PREPARING MULTIMETALLIC REFORMING CATALYSTS

Charles H. Mauldin, and William C. Baird, Jr., both of Baton Rouge, La., assignors to Exxon Research & Engineering Co., Florham Park, N.J.

Filed May 23, 1980, Ser. No. 152,669

Int. Cl.³ B01J *21/04, 23/64, 23/72*

U.S. Cl. 252—466 PT **6 Claims**

1. A process for the preparation of platinum-rhenium reforming catalysts which comprises

pre-forming an inorganic oxide support of particle size diameter of at least about 1/32 inch in diameter,

contacting said support with an acid solution without dissolving any significant amount of said support,

neutralizing said acid treated support without dissolving any significant amount of said support,

impregnating said neutralized support by contact thereof with a solution containing platinum and rhenium compounds, and then

drying and calcining said impregnated support to form said catalyst.

4,302,360

CATALYST FOR CATALYTIC COMBUSTION OF HYDROGEN

Masatake Haruta, Ikeda; Hiroei Sano, Toyonaka; and Tomizo Nakamura, Moriguchi, all of Japan, assignors to Agency of Industrial Science & Technology and Ministry of International Trade & Industry, both of Tokyo, Japan

Filed Jan. 11, 1980, Ser. No. 111,253

Int. Cl.³ B01J *23/34, 23/50, 23/68, 23/74*

U.S. Cl. 252—471 **1 Claim**

1. A catalyst for the catalytic combustion of hydrogen, comprising;

a composite oxide of silver and at least one oxide of a metal selected from the group consisting of cobalt and manganese supported on a carrier of ceramic wool, foamed ceramic or foamed metal, the content of said silver falling within the range of 1 to 50 atom%.

4,302,361

PRESSURE SENSITIVE CONDUCTOR

Teizo Kotani; Masaki Nagato, and Kozo Arai, all of Yokohama, Japan, assignors to Japan Synthetic Rubber Co., Ltd., Tokyo, Japan

Filed Feb. 26, 1979, Ser. No. 15,485

Claims priority, application Japan, Apr. 24, 1978, 53-20522

Int. Cl.³ H01B *1/04*

U.S. Cl. 252—503 **11 Claims**

1. A pressure sensitive conductor comprising (I) an electrically insulating rubber, (II) 25 to 50% by volume, based on the volume of the pressure sensitive conductor, of particles of a conductive metal selected from the group consisting of silver, copper, cobalt, platinum, gold, nickel, iron, chromium, titatium, zinc, and alloys and oxides thereof, and (III) 5 to 20% by volume, based on the volume of the pressure sensitive conductor, of carbon black, said conductor having JIS A hardness of 40 or more said rubber being moldable in the presence of the carbon black.

4,302,362

STABLE PYROCHLORE RESISTOR COMPOSITIONS

Lewis C. Hoffman, Hockessin, Del., and Samuel J. Horowitz, Synder, N.Y., assignors to E. I. Du Pont de Nemours and Company, Wilmington, Del.

Filed Jan. 23, 1979, Ser. No. 5,719

Int. Cl.³ H01B *1/06*

U.S. Cl. 252—520 **20 Claims**

1. A thick film resistor composition consisting essentially of:

(A) 20–75 parts by weight, based on the weight of (A) plus (B) plus (C), of a conductive pyrochlore having the general formula

$$(M_xBi_{2-x})(M'_yM\Delta_{2-y})O_{7-z}$$

wherein

M is selected from the group consisting of yttrium, thallium, indium, cadmium, lead, copper and the rare earth metals;

M' is selected from the group consisting of platinum, titanium, chromium, rhodium and antimony;

M" is ruthenium, iridium or mixtures thereof;

x is 0–2 with the proviso that, for monovalent copper, $x \leqq 1$;

y is 0–0.5 with the proviso that y is 0–1 when M' is either rhodium or more than one of platinum, titanium, chromium, rhodium and antimony; and

z is 0–1 with the proviso that it is at least equal to approximately x/2 when M is divalent lead or cadmium;

(B) 12–75 parts by weight, based on the weight of (A) plus (B) plus (C), of a glass binder having a coefficient of thermal expansion range of approximately $50\text{–}90 \times 10^{-7}/°$ C. and a coalescence temperature range of approximately 540°–950° C.;

(C) 2–30 parts by weight, based on the weight of (A) plus (B) plus (C), of a refractory finely divided filler having a low solution rate in the glass binder, a coefficient of thermal expansion range of approximately $40\text{–}60 \times 10^{-7}/°$ C. and a particle size range of 0.1–3 nm with at least 90% by weight in the 0.3–1 nm range; and

(D) an organic vehicle wherein the ratio of (A) plus (B) plus (C) to the vehicle is in the range of 2:1 to 6:1 by weight.

4,302,363

PERFUME COMPOSITIONS CONTAINING 4(5)-ACETYL-7,7,9(7,9,9)-TRIMETHYLBICYCLO[4.3.0]-NON-1-ENE

Klaus Bruns, Krefeld-Traar, and Ursula Weber, Wachtendonk, both of Fed. Rep. of Germany, assignors to Henkel Kommanditgesellschaft auf Aktien, Düsseldorf-Holthausen, Fed. Rep. of Germany

Filed Jun. 9, 1980, Ser. No. 157,528

Claims priority, application Fed. Rep. of Germany, Jun. 25, 1979, 2925622

Int. Cl.³ A61K *7/46*

U.S. Cl. 252—522 R **5 Claims**

1. A perfume composition comprising an effective amount of a mixture of the stereoisomers of 4-acetyl-7,7,9-trimethylbicyclo[4.3.0]non-1-ene, 5-acetyl-7,7,9-trimethylbicyclo[4.3.0]non-1-ene, 4-acetyl-7,9,9-trimethylbicyclo[4.3.0]non-1-ene, and 5-acetyl-7,9,9-trimethylbicyclo[4.3.0]non-1-ene.

4,302,364

LIQUID DETERGENT COMPOSITIONS COMPRISING ANIONIC, NONIONIC AND CATIONIC SURFACTANTS

Pierrette Gosset, Strombeek-Bever, and Rainer Lodewick, Meise, both of Belgium, assignors to The Procter & Gamble Company, Cincinnati, Ohio

Filed Aug. 6, 1979, Ser. No. 64,262

Claims priority, application United Kingdom, Aug. 10, 1978, 32939/78

Int. Cl.³ C11D *1/86, 3/42*

U.S. Cl. 252—545 **1 Claim**

1. A storage stable, homogeneous, non gelling heavy-duty liquid detergent composition of special effectiveness against make-up and dirty motor oil stains on cotton and polyester, consisting by weight of

(a) 24% triethanolamine salt of a linear alkylbenzene sulfonic acid wherein the alkyl chain length averages 11.7 carbon atoms in length;

(b) 18.5% condensation product of 7 moles of ethylene oxide with 1 mole of a primary alcohol of about 25% branched chain structure having 14 to 15 carbon atoms in average;

(c) 3.5% coconut (C_{12}–C_{14}) dihydroxyethylmethyl ammonium chloride;

(d) 0.23% stilbene brightener;

(e) 10% ethanol

(f) 1.5% (free) triethanolamine;

(g) 0.3% of a 9:1 mixture of dimethylpolysiloxane and aerogel silica emulsified with the aid of ethoxylated stearic acid so as to contain about 10% active material (polysiloxane/silica) in water;

(h) 0.75% hydrogenated fatty acid having in average 18–22 carbon atoms;

(i) 0.4% proteolytic enzyme composition containing 15% pure enzyme;

(j) 0.3% diethylenetriaminepentamethylenephosphonic acid;

(k) 0.2% citric acid;

(l) 0.8% perfume and dyes;

(m) the balance being water.

4,302,365

ENGINE DEGREASER COMPOSITION

William C. Holmgren, and Charles E. Hiddema, both of Muskegon, Mich., assignors to American Grease Stick Company, Muskegon, Mich.

Filed Feb. 11, 1980, Ser. No. 120,290

Int. Cl.³ C11D *3/44, 7/52*

U.S. Cl. 252—548 **1 Claim**

1. An engine degreaser composition for use in an aerosol package comprising a mixture of:

	Percent by Weight
Sodium lauryl sulfate	3
Triethanolamine	t
Xylene	13
Butyl cellosolve	1
Water	82

4,302,366

FLUORINATED PRODUCTS INTENDED FOR OILPROOFING AND WATERPROOFING TREATMENTS OF VARIOUS MATERIALS AND MORE PARTICULARLY OF FIBROUS MATERIALS

Jean Perronin, Senlis, and Andre L. Dessaint, Creil, both of France, assignors to Produits Chimiques Ugine Kuhlmann, Courbevoie, France

Filed Nov. 1, 1979, Ser. No. 90,224

Claims priority, application France, Nov. 14, 1978, 78 32087

Int. Cl.³ C14C *9/00;* **C07C** *149/20, 149/40;* **C09K** *15/10*

U.S. Cl. 252—8.57 **54 Claims**

1. Fluorinated products resulting from the reaction of

(a) a molecule of at least one acid of the formula:

$$HS\text{—}A\text{—}(COOH)_n \qquad (I)$$

wherein A represents an aliphatic or aromatic hydrocarbon radical and n is a whole number from 1 to 4, and of

(b) one to five molecules of at least one compound possessing at least one ethylenic bond, at least one of said compounds corresponding to the formula:

$$Rf\text{—}B\text{—}\underset{\substack{|\\ R}}{C}{=}CH\text{—}R \qquad (II)$$

wherein Rf represents a straight or branched perfluorinated chain containing from 1 to 20 carbon atoms, B represents a bivalent chaining which may be branched and which may comprise sulfur, oxygen or nitrogen atoms, one R represents a hydrogen atom and the other R represents a hydrogen atom or an alkyl group containing from 1 to 4 carbon atoms; and possibly neutralized or partially neutralized with an inorganic or organic base.

21. Compositions for oilproofing, waterproofing treatment and conferring a resistance to aggressive products or to solvents, said compositions containing a product in accordance with claims 1, 2, 3, 4, 5 or 6.

43. The process which comprises applying the compositions in accordance with claim 21 for the oilproofing and waterproofing of materials and in particular of papers, cardboards, woods, leathers, fabrics, metals, stoneware, glasses, porcelains, plastics and painted surfaces.

4,302,367

PAPER-COATING COMPOSITIONS

Claus Cordes, Weisenheim; Guenter Hirsch, Mutterstadt, and Heinrich Hartmann, Limburgerhof, all of Fed. Rep. of Germany, assignors to BASF Aktiengesellschaft, Ludwigshafen, Fed. Rep. of Germany

Filed Feb. 25, 1980, Ser. No. 124,079

Claims priority, application Fed. Rep. of Germany, Mar. 2, 1979, 2908201

Int. Cl.³ C08J *3/06;* **C08L** *9/10, 9/08, 33/08*

U.S. Cl. 260—17 R **8 Claims**

1. An improved paper-coating composition containing, per 100 parts by weight of finely divided pigment, from 5 to 25 parts by weight of one or more copolymers, having a glass transition temperature of from −40° to 50° C., in the form of an aqueous dispersion, and from 0.1 to 10 parts by weight of one or more water-soluble or water-swellable co-binders selected from the group consisting of polyvinyl alcohol, cellulose ether, starch, casein and alginates, said composition being prepared by emulsifying said co-binder in a hydrocarbon oil to form a water-in-oil emulsion and then mixing the emulsion with the remaining components of the composition.

4,302,368

NONTHROMBOGENIC ARTICLES AND METHOD OF PREPARATION

Betty J. Dudley, deceased, late of Durham, N.C. (by Kenneth H. Dudley, executor), and Joel L. Williams, Cary, N.C., assignors to Becton, Dickinson and Company, Paramus, N.J.

Continuation-in-part of Ser. No. 899,343, Apr. 24, 1978, abandoned, which is a continuation of Ser. No. 752,247, Dec. 20, 1976, abandoned, and a continuation-in-part of Ser. No. 888,951, Mar. 22, 1978, abandoned, which is a continuation of Ser. No. 764,474, Jan. 31, 1977, Pat. No. 4,116,898. This application Sep. 17, 1979, Ser. No. 76,201

The portion of the term of this patent subsequent to Sep. 26, 1995, has been disclaimed.

Int. Cl.³ C08L *5/10*

U.S. Cl. 260—17.4 R **9 Claims**

1. An article for use in association with whole blood, which comprises;

a solid, polymeric resin substrate; and

a compound of the formula:

$$\left[\begin{array}{c} H \\ | \\ R-N-H \\ | \\ R_1 \end{array}\right]^{\oplus} A^{\ominus}$$

wherein R is alkyl of 12 to 18 carbon atoms, inclusive, R_1 is lower alkyl and A represents the negative ion of a salt of heparin, affixed to said substrate.

4,302,369

ALUMINUM MODIFIED WATER ABSORBENT COMPOSITION

Lyle F. Elmquist, St. Paul, Minn., assignor to Henkel Corporation, Minneapolis, Minn.

Filed Apr. 8, 1980, Ser. No. 138,466

Int. Cl.³ C08L *3/02, 3/04*

U.S. Cl. 260—17.4 GC **8 Claims**

1. A hydrolyzed starch graft copolymer having in its anionic form carboxyl and amide functionality wherein a substantial portion of the anionic form of the hydroxyzed starch graft copolymer is uniformly reacted to form the aluminum salt said aluminum salt being formed prior to the drying of the hydrolyzed starch graft copolymer wherein from about 5 percent to about 95 percent by weight of the free carboxyl groups present are neutralized with aluminum.

4,302,370

ASBESTOS-FREE ASPHALT ROOF COATING

Mark W. Buse, Forth Worth, Tex., assignor to Texas Refinery Corporation, Fort Worth, Tex.

Filed Jun. 2, 1980, Ser. No. 155,214

Int. Cl.³ C08L *91/00*

U.S. Cl. 260—28.5 AS **10 Claims**

1. An asbestos-free composition, comprising:

asphalt cutback;

finely divided polyolefin fibers blended with said asphalt cutback to form a suspension of polyolefin fibers in said asphalt cutback;

propylene carbonate coupling agent, said propylene carbonate being present in an effective amount to maintain said polyolefin fibers in suspension in said asphalt cutback so that substantially no settling-out of the polyolefin fibers occurs.

4,302,371

STABILIZED ROSIN ESTER AND PRESSURE-SENSITIVE ADHESIVE AND HOT-MELT COMPOSITION BASED THEREON

Kohtaro Matsuo, Mino, and Seiichi Tsuchida, Sakai, both of Japan, assignors to Arakawa Kagaku Kogyo Kabushiki Kaisha, Osaka, Japan

Continuation of Ser. No. 47,125, Jun. 11, 1979, Pat. No. 4,248,770. This application Jul. 17, 1980, Ser. No. 169,619

Claims priority, application Japan, Jun. 23, 1978, 53/76725

Int. Cl.³ C09F *1/04;* **C08L** *91/06, 93/04*

U.S. Cl. 260—28.5 R **10 Claims**

1. A pressure-sensitive adhesive composition comprising an elastomer and a stabilized rosin ester having a higher softening point, the rosin ester being prepared by subjecting a rosin to disproportionation and purification, and esterifying, the resulting purified disproportionated rosin with a tri- or more valent polyhydric alcohol.

4,302,372

NON-FIRED SILICON CARBIDE REFRACTORIES

Shigeru Fujiwara; Masayosi Nagahara; Satoshi Nagai, and Toshihiro Isobe, all of Himeji, Japan, assignors to Nippon Steel Corporation, Tokyo and Harima Refractory Co. Ltd., Takasago, both of, Japan

Filed Sep. 26, 1979, Ser. No. 78,966

Claims priority, application Japan, Sep. 26, 1978, 53-118432

Int. Cl.³ C04B *35/56*

U.S. Cl. 260—29.3 **4 Claims**

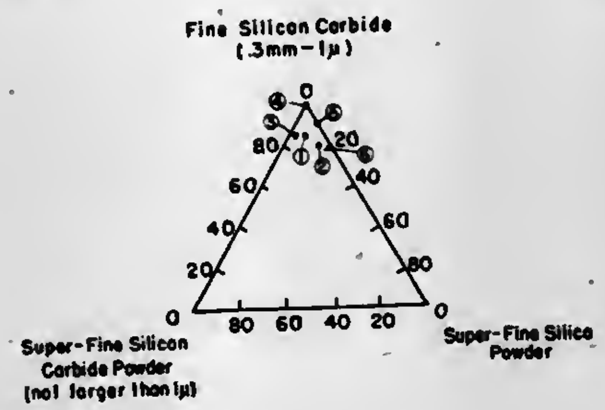

1. A non-fired silicon-carbide base refractory mixture consisting essentially of 95 to 99.5% (in respect to the mixture) of silicon carbide containing 1.5 to 8% (in respect to the silicon carbide) of particles not larger than 1μ and 0.5 to 5% of super-fine silica powder containing at least 50% of particles not larger than 1μ after a coagulation.

4,302,373

WATER-BORNE COATING COMPOSITION MADE FROM MODIFIED EPOXY RESIN, POLYMERIC ACID AND TERTIARY AMINE

William H. Steinmetz, Collingswood, N.J., assignor to E. I. Du Pont de Nemours and Company, Wilmington, Del.

Filed Aug. 5, 1980, Ser. No. 175,397

Int. Cl.³ C08L *33/00, 33/02, 63/10, 63/00*

U.S. Cl. 260—29.3 **28 Claims**

1. A water-borne coating composition consisting essentially of liquid carrier and the product of the reaction in aqueous media of:

(A) not less than 50% by weight, based on the weight of (A) plus (B), of a modified polyepoxide in the form of an ester, an ether, or a phenolic hydroxyl which contained, prior to modification, on the average, two terminal 1,2-epoxy groups per molecule and had an epoxy equivalent weight of 750–5000, said modification being done by reacting at least about 25% of the epoxy groups with at least one of groups selected from monobasic acids to form esters, monohydric phenols to form ethers, or polyhydric phenols to form phenolic hydroxyl terminated polymers;

(B) a carboxyl-functional polymer in an amount sufficient to provide at least 1.25 equivalents of carboxyl groups, when the source of the carboxyl group is a monoprotic acid, and at least 2.0 equivalents of carboxyl groups, when the source of such groups is a diprotic acid, per equivalent of 1,2-epoxy groups in the epoxy resin, said polymer having a number average molecular weight (determined by gel permeation chromatography) of about 2,000–100,000 and an acid number of 100–500;

(C) at least 1.25 equivalents of a tertiary amine per equivalent of 1,2-epoxy groups in the epoxy resin, said tertiary amine being selected from the group consisting of $R_1R_2R_3N$, pyridine, N-methylpyrrole, N-methyl piperidine, N-methyl pyrrolidine, N-methyl morpholine, and mixtures thereof and wherein R_1 and R_2 are substituted or unsubstituted monovalent alkyl groups containing one or two carbon atoms in the alkyl portion and R_3 is a substituted or unsubstituted monovalent alkyl group containing 1–4 carbon atoms; and

(D) optionally, 10–90% of the amount required for stoichiometric reaction with the carboxyl-functional polymer of (B) of at least one primary, secondary or tertiary amine or monofunctional quaternary ammonium hydroxide;

wherein for increasing ratios of carboxyl groups to 1,2-epoxy groups, the amount of amine is increased to keep the carboxyl-functional polymer water dispersible,

in which reaction product at least about 50% of the epoxide groups on the modified polyepoxides are in the form of quaternary ammonium salts.

4,302,374

STABLE DISPERSION OF POSITIVELY CHARGED POLYFLUOROCARBON RESIN PARTICLES

Kees Helle, Bennekom, and Robert C. Groot, Rheden, both of Netherlands, assignors to AKZO N.V., Arnhem, Netherlands

Continuation of Ser. No. 728,225, Sep. 30, 1976, abandoned. This application Mar. 10, 1978, Ser. No. 885,332

Claims priority, application Netherlands, Oct. 4, 1975, 7511701

The portion of the term of this patent subsequent to Jul. 14, 1995, has been disclaimed.

Int. Cl.³ C08L *27/18*

U.S. Cl. 260—29.6 F **13 Claims**

1. A stable dispersion of positively charged polyfluorocarbon resin particles, and, if desired, particles of a different material, which resin particles have an average particle size of less than about 10 μm, which dispersion contains a cationic fluorocarbon surfactant and a nonionic surfactant, wherein:

(a) the nonionic surface active compound is a fluorocarbon compound;

(b) the molar ratio between the cationic surface active compound and the nonionic surface active fluorocarbon compound is between 25:1 and 1:3.5;

(c) the total amount of surface active fluorocarbon compounds is at least 3×10^{-3} mmoles per m^2 of surface area of the polyfluorocarbon particles.

4,302,375

PAINT COMPOSITIONS HAVING WET ADHESION CHARACTERISTICS

Dale D. Dixon, Kutztown, and Frederick L. Herman, Allentown, both of Pa., assignors to Air Products and Chemicals, Inc., Allentown, Pa.

Filed Oct. 1, 1979, Ser. No. 80,912

The portion of the term of this patent subsequent to Sep. 5, 1995, has been disclaimed.

Int. Cl.³ C08L *35/00, 35/08*

U.S. Cl. 260—29.6 RB **7 Claims**

1. In a paint composition comprising water, pigment, thickener and a latex comprising polymerized resin particles containing at least 25% of vinyl acetate by weight, the improvement which comprises including from about 0.1–10% by weight of copolymerized diallylic urea composition represented by the formula:

$$(CR_1R_2{=}CR_3{-}CR_4R_5)_2N{-}\overset{\displaystyle O}{\overset{\|}{C}}{-}NH_2$$

wherein R_1, R_2 are hydrogen, alkyl, phenyl, or hydroxyalkyl; R_3 is hydrogen, or lower alyl, R_4 and R_5 are hydrogen, methyl or phenyl

---

4,302,376

DENTAL MATERIALS WHICH ARE OPAQUE TO X-RAYS AND ARE BASED ON ORGANIC PLASTICS IN PASTE FORM

Michael Walkowiak, Leverkusen; Wolfgang Podszun, Cologne; Bernhard Leusner, Leverkusen; Carlhans Süling, Odenthal, and Hans H. Schulz, Leichlingen, all of Fed. Rep. of Germany, assignors to Bayer Aktiengesellschaft, Leverkusen, Fed. Rep. of Germany

Filed Nov. 19, 1979, Ser. No. 95,723

Claims priority, application Fed. Rep. of Germany, Nov. 24, 1978, 2850918

Int. Cl.³ A61K *6/08*

U.S. Cl. 260—29.7 UA **13 Claims**

1. A dental paste opaque to X-rays, consisting essentially of (a) at least one ester of methacrylic acid and a monohydric or polyhydric alcohol as polymerizable binder, (b) at least one crosslinked bead polymer plastic made from an ester of methacrylic acid and a monohydric or polyhydric alcohol, and (c) an X-ray contrast medium.

4,302,377

LATEX COAGULATION

Nur Gurak, and Klaas Tebbens, both of Sarnia, Canada, assignors to Polysar Limited, Sarnia, Canada

Filed Dec. 5, 1979, Ser. No. 100,278

Claims priority, application Canada, Jul. 19, 1979, 332148

Int. Cl.³ C08J *3/16*

U.S. Cl. 260—29.7 PT **8 Claims**

1. An improved process for the coagulation of an aqueous latex of a polymer which comprises contacting a stream of said latex with an aqueous stream of an inorganic coagulant and separating, recovering and drying a coagulated polymer therefrom wherein said polymer comprises a rubbery C_4–C_6 conjugated diolefin-containing polymer, the improvement being that said latex and said coagulant are mixed in a tubular coagulation means of narrow diameter elongate form at a temperature of from about 50° to about 80° C. for a time of from about 0.1 to about 25 seconds and under conditions of flow described by a

Reynolds Number of from about 7,500 to about 75,000, the ratio of the weight per unit of time of flow of aqueous coagulant to the weight per unit of time of flow of polymer in the latex being from about 40:1 to about 250:1, and the essentially completely coagulated mixture from said tubular coagulation means is passed into the first of a series of two interconnected vessels or into a single vessel, said vessels being equipped with agitators to mix the contents thereof and containing aqueous coagulant, said tubular coagulation means terminating below the level of the aqueous coagulant in the first said vessel, the average residence time in said vessel or vessels being a total of from about 1 to about 15 minutes, the coagulated polymer from said vessel or vessels then being separated from the aqueous phase and recovered and dried.

4,302,378

ABS-MOULDING COMPOSITIONS HAVING HIGH NOTCHED IMPACT STRENGTH

Christian Lindner, Cologne; Karl-Heinz Ott, Leverkusen; Bernhard Arnold, Pulheim; Friedrich Kowitz, and Dieter Kuhlmann, both of Dormagen, all of Fed. Rep. of Germany, assignors to Bayer Aktiengesellschaft, Fed. Rep. of Germany

Continuation-in-part of Ser. No. 69,616, Aug. 27, 1979, abandoned. This application Apr. 2, 1980, Ser. No. 136,561

Claims priority, application Fed. Rep. of Germany, Aug. 30, 1978, 2837735

Int. Cl.[3] C08K *5/10;* **C08L** *51/00*

U.S. Cl. 260—31.6 **2 Claims**

1. ABS-moulding compositions comprising an ABS-polymer of

(a) 5 to 70% by weight of one or more graft products which have been made by graft polymerising styrene, a mixture of styrene and acrylonitrile, a mixture of styrene and methylmethacrylate or a mixture of styrene, acrylonitrile and methylmethacrylates onto a polybutadiene, butadiene/styrene or butadiene/acrylonitrile rubber,

(b) 95 to 30% by weight of one or more thermoplastic resins selected from polystyrene, styrene/acrylonitrile copolymers, α-methylstyrene/acrylonitrile copolymers, polymethylmethacrylate and terpolymers of styrene, acrylonitrile and maleic acid anhydride, and

(c) 0.05 to 1% by weight (based on total mixture) of a perfluoroalkane acid of the formula $CF_3—(CF_2)_n$ COOH, $CF_3\text{-}(CF_2)_{\overline{n}}$ SO_3H (n=1-20), a salt of said acid, an ester or an amide of said acid.

2. ABS-moulding compositions according to claim 1 having an additional content of 0.025 to 3% by weight of pentaerythritol tetrastearate, bis-stearylamide of ethylene diamine or mixtures thereof.

4,302,379

WEAR RESISTANT SLIDING ELEMENT HAVING A LOW COEFFICIENT OF FRICTION

Hiroshi Ueda, Kasugai; Masao Shimazaki, and Yasumitsu Kuwazuru, both of Toyota, all of Japan, assignors to Taiho Kogyo Co., Ltd., Aichi, Japan

Filed Dec. 27, 1979, Ser. No. 107,628

Claims priority, application Japan, Mar. 14, 1979, 54-29482

Int. Cl.[3] C08L *61/06*

U.S. Cl. 260—38 **13 Claims**

1. A sliding element comprising a hot pressed body, said hot pressed body comprising from approximately 30 to approximately 80% of a graphitepowder, from approximately 0.5 to approximately 30% of a lead-containing powder, and from approximately 15 to approximately 45% of an organic resin binder, and from approximately 2 to 15% of at least one member selected from the group consisting of a silicon dioxide powder and a silicate powder, all percentages being by weight based on the weight of said hot pressed body.

4,302,380

LOW-SHRINKAGE, ACID-HARDENING MIXTURES OF FURAN CEMENTS AND PROCESS FOR THE PREPARATION THEREOF

Wolfgang Hesse, Wiesbaden; Guido Lorentz, Butzbach, and Klaus Rauhut, Wiesbaden, all of Fed. Rep. of Germany, assignors to Hoechst Aktiengesellschaft, Frankfurt am Main, Fed. Rep. of Germany

Filed Jun. 25, 1980, Ser. No. 162,803

Claims priority, application Fed. Rep. of Germany, Jun. 28, 1979, 2926053

Int. Cl.[3] C08L *61/10*

U.S. Cl. 260—38 **11 Claims**

1. An acid-hardening low shrinkage cement based on a furan-modified phenolic resin containing as a binder

(A) a reaction product of furfuryl alcohol with a hydroxymethyl group-containing substituted phenol resol, based on a substituted phenol selected from the group consisting of a bifunctional alkylphenol, an aralkylphenol each having 3 to 20 carbon atoms in the alkyl radical, an arylphenol or a combination thereof with a minor amount of one or more unsubstituted phenols, wherein in the substituted phenol resol at least 75% of the reactive H-atoms of the nucleus are substituted by reaction with formaldehyde and wherein more than 0.5 mol of furfuryl alcohol has been reacted per hydroxymethyl group; together with

(B) at least one reactive diluent in a weight ratio of (B):(A) in the range from (0.4 to 1.5):1.

4,302,381

DENTAL MATERIAL

Ikuo Omura; Junichi Yamauchi; Yoshinori Nagase, and Kyolchiro Shibatani, all of Kurashiki, Japan, assignors to Kuraray Co., Ltd., Kurashiki, Japan

Filed Aug. 17, 1979, Ser. No. 67,454

Claims priority, application Japan, Aug. 29, 1978, 53-105738

Int. Cl.[3] C08K *3/36*

U.S. Cl. 260—42.15 **11 Claims**

1. A dental filling material, which comprises:

(1) a polymerizable methacrylate monomer mixture consisting essentially of a compound of the formula:

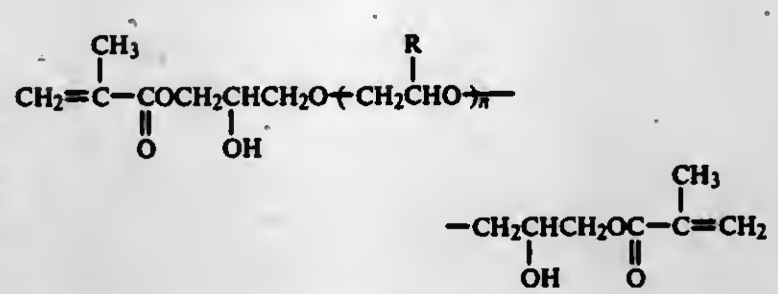

wherein R is hydrogen or methyl and n is an integer of 1 to 4 and at least one polymerizable methacrylate comonomer having from 5 to 40 carbon atoms, said compound being present in said monomer mixture in an amount of 5-50% by weight and said comonomer being present in said mixture in an amount of 95-50% by weight, the percentages being based upon the total weight of polymerizable methacrylate monomers in the monomer mixture; (2) a curing agent and (3) a powdered filler.

4,302,382

COLOR STABLE AROMATIC POLYESTERS

James Spanswick, Wheaton, Ill., assignor to Standard Oil Company (Indiana), Chicago, Ill.

Filed May 5, 1980, Ser. No. 146,741

Int. Cl.[3] C08K *5/15, 5/52, 5/53*

U.S. Cl. 260—45.8 A **10 Claims**

1. A color stable composition consisting essentially of aromatic polyester and a stabilizing quantity of a stabilizer selected from the group of mixtures of either organic phosphates or phosphonates with epoxides having a boiling point above 250° C. said stabilizer mixtures individually or in combination being about 0.01 to 0.5% by weight of the aromatic polyester.

4,302,383

STABILIZED OLEFIN POLYMERS

Leo L. Valdiserri, Belpre, Ohio, and Elyse M. Bullock, Parkersburg, W. Va., assignors to Borg-Warner Chemicals, Inc., Parkersburg, W. Va.

Filed May 19, 1980, Ser. No. 150,878

Int. Cl.[3] C08K *5/34, 5/52;* **C09K** *15/30, 15/32*

U.S. Cl. 260—45.8 N **20 Claims**

1. A polymer composition comprising an olefin polymer in combination with each of (a) from about 0.3 to about 0.4 percent of a five-membered nitrogen ring compound having the structure AOCOR, ACOOR, or ACONHR' where A is a 2,2,5,5-tetraalkyl pyrrolidine or pyrroline wherein the alkyl groups are lower alkyl, R is alkyl, alkOCOA or alkCOOA where alk is an alkylene residue of a dicarboxylic or dihydroxy compound, and R' is alkyl or alkNHCOA; or a salt thereof, and (b) from about 0.05 to about 0.1 percent of an organic phosphite ester.

3. The polymer composition of claim 1 wherein the organic phosphite ester is a pentaerythritol diphosphite.

4,302,384

PURIFICATION OF GAMMAGLOBULIN DERIVATIVE

Akinobu Funatsu; Shuzoh Oyama; Yoshinori Akimoto, and Komei Ohashi, all of Kumamoto, Japan, assignors to Juridical Foundation, The Chemo-Sero-Therapeutic Research Institute, Kumamoto, Japan

Filed Nov. 30, 1979, Ser. No. 98,789

Claims priority, application Japan, Jan. 17, 1979, 54-4177

Int. Cl.[3] C07G *7/00;* **A61K** *39/00*

U.S. Cl. 260—112 B **9 Claims**

1. A process for the production of a purified S-sulfonated gammaglobulin which comprises treating an S-sulfonated gammaglobulin with an anion exchanger in a buffer solution for development having a pH level of 7 to 8 and an ionic strength of 0.01 to 0.15 and thereby absorbing single molecular S-sulfonated gammaglobulin on the anion exchanger, and then eluting the single molecular S-sulfonated gammaglobulin with a buffer solution for elution.

4,302,385

PLACENTA-SPECIFIC TISSUE PROTEIN PP_{10}

Hans Bohn, Marburg an der Lahn, and Walter Kraus, Bürgeln, both of Fed. Rep. of Germany, assignors to Behringwerke Aktiengesellschaft, Marburg an der Lahn, Fed. Rep. of Germany

Filed Dec. 17, 1979, Ser. No. 104,119

Claims priority, application Fed. Rep. of Germany, Dec. 19, 1978, 2854759

Int. Cl.[3] A61K *35/50, 39/395;* **C07G** *7/00*

U.S. Cl. 260—112 B **3 Claims**

1. An isolated, concentrated tissue protein, PP_{10}, obtained by fractionating a placental extract or an aqueous solution obtained from such an extract, said tissue protein having:

(a) a protein proportion of 93±3%;

(b) an amino acid analysis of

	mol %	Variation Coefficient (%)
lysine	6.51	1.55
histidine	1.81	5.21
arginine	3.67	2.24
aspartic acid	9.82	0.79
threonine	5.20	3.32
serine	7.32	3.91
glutamic acid	11.50	0.54
proline	5.16	2.76
glycine	6.97	1.71
alanine	7.74	4.70
cystine/2	1.94	3.45
valine	6.32	6.54
methionine	2.43	4.54
isoleucine	4.09	1.97
leucine	9.46	2.63
tyrosine	2.96	8.88
phenylalanine	5.44	1.13
tryptophan	1.69	7.04

(c) a carbohydrate proportion of 6.65±1.55%, consisting of 4.8±1.0% of hexoses, 1.2±0.3% of hexosamine, 0.05±0.05% of fucose, and 0.6±0.2% of sialic acid;

(d) a sedimentation coefficient $S_{20/w}{}^{o}$, of 3.8±0.2 S;

(e) a molecular weight determined in the ultracentrifuge of 48,000±5,000;

(f) a molecular weight determined in sodium dodecylsulfate-containing polyacrylamide gel of 65,000±5,000;

(g) an extinction coefficient $E_{1\,cm}^{1\%}$ (280 nm) of 10.9±0.5;

(h) an electrophoretic mobility in the range of the α1-globulins; and

(i) an isoelectric point of 5.1±0.3.

4,302,386

ANTIGENIC MODIFICATION OF POLYPEPTIDES

Vernon C. Stevens, Dublin, Ohio, assignor to The Ohio State University, Columbus, Ohio

Division of Ser. No. 936,876, Aug. 25, 1978, Pat. No. 4,201,770, which is a continuation-in-part of Ser. No. 622,031, Oct. 14, 1975, abandoned, which is a continuation-in-part of Ser. No. 462,955, Apr. 22, 1974, abandoned, which is a continuation-in-part of Ser. No. 406,821, Oct. 16, 1973, abandoned, which is a continuation-in-part of Ser. No. 357,892, May 7, 1973, abandoned. This application Jan. 16, 1980, Ser. No. 112,628

Int. Cl.[3] C07C *103/52;* **C07G** *7/00;* **A61K** *37/00, 39/00*

U.S. Cl. 260—112.5 R **35 Claims**

1. A modified polypeptide for isoimmuniogically controlling biological action in a mammal by antibody formation, consisting of a protein hormone, a non-hormonal protein, or a fragment of either which has been chemically modified outside the body of said mammal, said protein hormone, non-hormonal protein or fragment having the properties of:

(a) in unmodified form, being non-immunogenic to said mammal and having a moleculr structure similar to an endogenous protein hormone or a non-hormonal protein, the biological function of which it is desired to inhibit, or fragment of either and

(b) in modified form, causing antibodies to be formed in the body of the mammal which inhibit the biological function of said endogenous protein hormone or non-hormonal protein following administration of the modified form into the body of said mammal.

4,302,387

AZO DYES FROM 1,3,4-THIADIAZOL-2-YL AND 1,2,4-THIADIAZOL-5-YL MOIETIES BEARING SULFATED HYDROXYALKOXYCARBONYL OR N-(HYDROXYALKYL)CARBAMOYL GROUPS ON THEIR RINGS

Ralph R. Giles, and Max A. Weaver, both of Kingsport, Tenn., assignors to Eastman Kodak Company, Rochester, N.Y.

Filed Dec. 5, 1979, Ser. No. 100,627

Int. Cl.[3] C09B *29/036, 29/09, 29/32, 29/36*

U.S. Cl. 260—155 **4 Claims**

1. A dye of the formula:

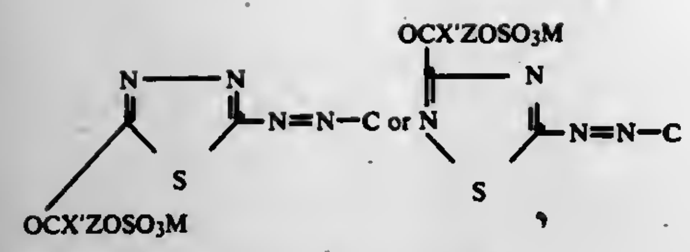

and wherein C is a coupler selected from

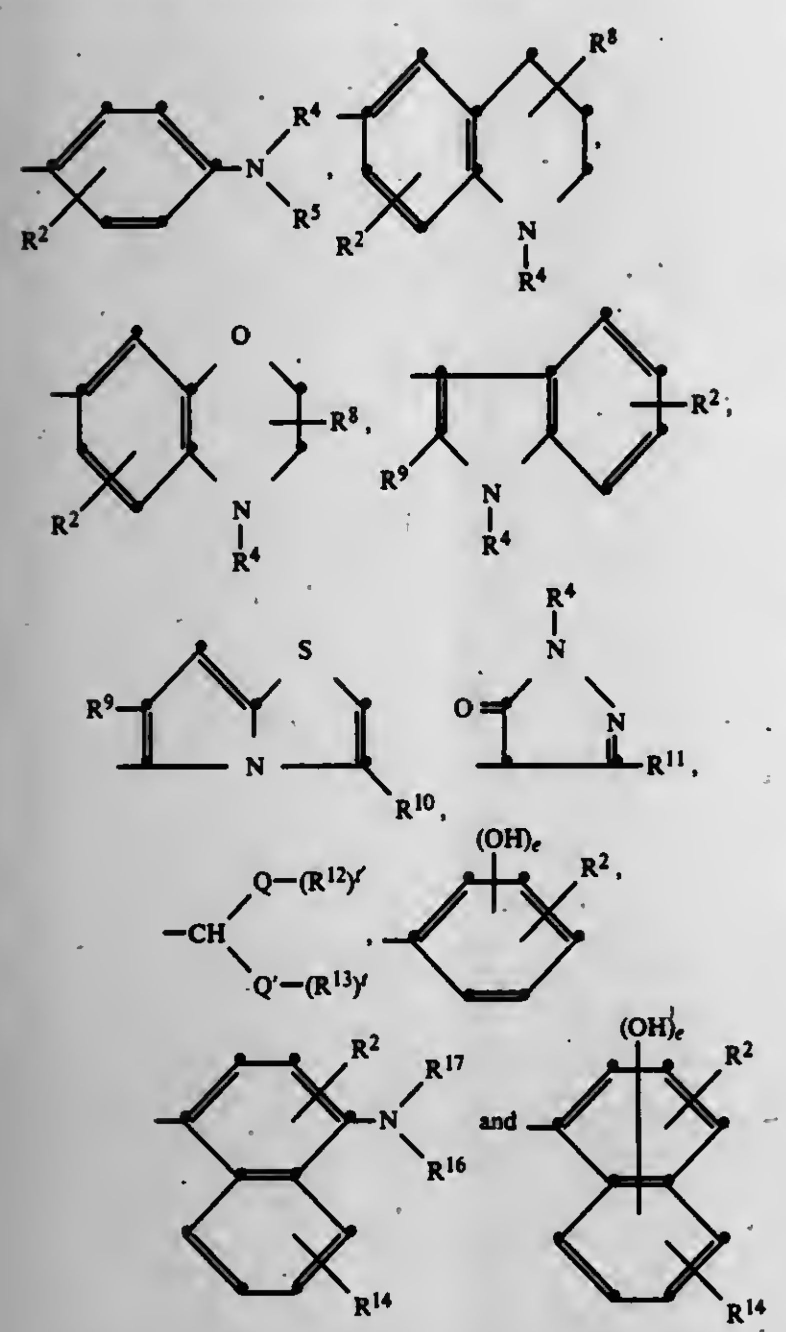

wherein

R^2 and R^{14} each represents up to three groups selected from hydrogen, fluorine, chlorine, bromine, alkyl, cycloalkyl, alkoxy, phenoxy, alkylthio, arylthio, and radicals having the formula —NH—X—R^3 in which X is —CO—, —COO—, or —SO_2— and R^3 is selected from alkyl and alkyl substituted with halogen, hydroxy, phenoxy, aryl, cyano, cycloalkyl, alkylsulfonyl, alkylthio, alkanoyloxy, and alkoxy, and when X is —CO—, R^3 also is selected from hydrogen, amino, alkylamino, dialkylamino, arylamino, aryl, and furyl;

R^4 and R^5 are each selected from hydrogen, alkyl, aryl, cycloalkyl, and alkyl substituted with halogen, CN, OH, alkoxy, aryloxy, alkoxyalkoxy, alkanoyl, alkanoyloxy, carbamoyl, alkylcarbamoyl, sulfamoyl, alkylsulfamoyl, alkoxyalkanoyloxy, and cycloalkyl, and R^4 and R^5 together represent a single, combined group —$CH_2CH_2CH_2CH_2CH_2$—, —$CH_2CH_2OCH_2CH_2$—, —CH_2CH_2—S—CH_2CH_2—, or —CH_2CH_2—SO_2—CH_2CH_2—;

R^8 represents one or two groups each selected from hydrogen, alkyl and alkyl substituted with —CN, alkoxy, alkoxycarbonyl, alkoxycarbonyloxy, phenyl, cyclohexoxy, —OH, —Cl and Br;

R^9, R^{10} and R^{11} are each selected from hydrogen, alkyl, phenyl, or phenyl substituted with 1-3 groups selected from Cl, Br, alkyl or alkoxy, alkylthio, benzylthio, cyclohexylthio and phenylthio;

Q and Q' are each selected from —CO—, —SO_2—, or —CN; R^{12} and R^{13} are each selected from alkyl, hydroxyalkyl, alkoxy, alkoxycarbonylamino, trifluoromethyl, phenyl or phenyl substituted with 1-3 groups selected from Cl, Br, alkyl or alkoxy, alkoxycarbonylalkyl, cyanoalkyl, amino, haloalkyl, alkylamino, alkylthio, benzylthio, cyclohexylthio and phenylthio; and R^{12} and R^{13} together comprise —$CH_2C(CH_3)_2CH_2$—, or 1,2—C_6H_4— connecting Q and Q'; R^{16} and R^{17} are selected from hydrogen, cycloalkyl, aryl, alkyl, and alkyl substituted with alkoxy, hydroxy, alkoxyalkoxy, hydroxyalkoxy, carbamoyl, sulfamoyl, alkanoylamino, or alkenylsulfonyl, and aryl substituted with hydroxyalkyl; e is 1 or 2; t and t' are each 1 or zero; X' is O, NH, N(alkyl)—, or N(aryl)—; Z is selected from straight- or branched-chain alkylene, and such alkylene substituted with phenyl, halogen, OSO_3M, alkoxy or aryloxy groups, —$CH_2(CH_2)_m$V—$CH_2(CH_2)_p$—, where m is 1, 2 or 3, p is 0, 1, 2 or 3, and V is O, S, SO_2, —SO_2NH—, —SO_2N(alkyl)—, —SO_2N(aryl), —N(SO_2 aryl)—, —NH, —NHCO—, —NHCONH, —N(SO_2 alkyl), or —CON(alkyl); M is H, Na, K or NH_4; n is 1 or 2; and wherein each of the above alkyl and alkoxy groups contain from 0 to three of the following: hydroxy; halogen; cyano; succinimido; glutarimido; phthalimido; 2-pyrrolidino; cyclohexyl; phenyl or phenyl substituted with alkyl, alkoxy, halogen, alkanoylamino, cyano or alkoxycarbonyl; alkanoylamino; sulfamoyl; alkylsulfamoyl; vinylsulfonyl; acrylamido; phthalimidinyl; benzoylsulfonicimidyl; alkylsulfonamido; phenylsulfonamido; alkoxycarbonylamino; alkylcarbamoyloxy; alkoxycarbonyl; alkoxycarbonyloxy;

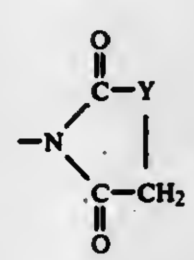

wherein Y is —NH—, —NH—alkyl—, —O—, —S—, or —CH_2O—; —S—R^6, wherein R^6 is alkyl, phenyl, phenyl substituted with halogen, alkyl, alkoxy, alkanoylamino, cyano, or alkoxycarbonyl, pyridyl, pyrimidinyl, benzoxazolyl, benzimidazolyl, benzothiazolyl, or

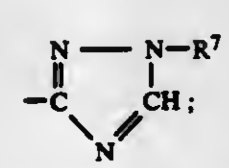

—SO_2R^3; —$COOR^3$; —OXR^3; —NH—X—R^3; —X—R^3; —$SO_2NR^7R^7$; wherein R^3 and X are as defined above and each R^7 is selected from H and R^3; alkoxy; alkoxy substituted with hydroxy, cyano, alkanoyloxy, or alkoxy; phenoxy; or phenoxy substituted with one or more of alkyl, alkoxy or halogen.

4,302,388

MONOAZO COMPOUNDS DERIVING FROM META-AMINO-BENZOIC ACID ANILIDES AND ACETOACETYL AMINO-BENZIMIDAZOLONE

Klaus Hunger, and Manfred Pesenacker, both of Kelkheim, Fed. Rep. of Germany, assignors to Hoechst Aktiengesellschaft, Frankfurt am Main, Fed. Rep. of Germany

Filed Oct. 18, 1979, Ser. No. 86,125

Claims priority, application Fed. Rep. of Germany, Oct. 21, 1978, 2845946

Int. Cl.[3] C09B *29/01, 29/32;* D06P *1/44*

U.S. Cl. 260—157 5 Claims

1. A compound of the formula

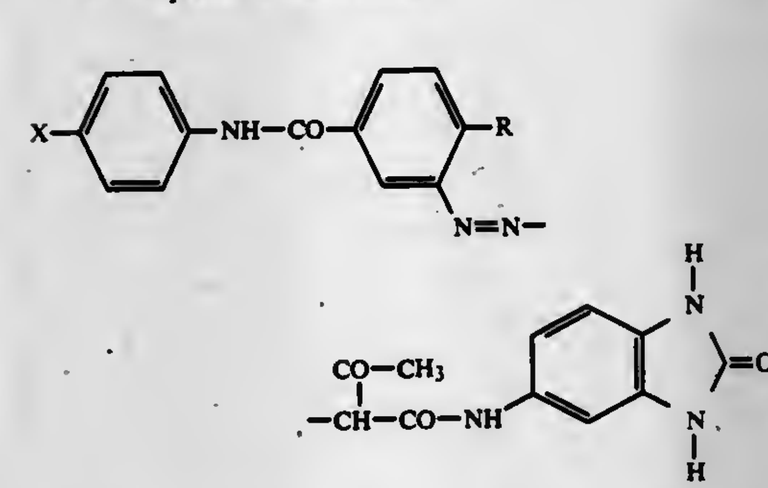

wherein R is methyl or chloro and X is carbamoyl or acetamino.

4,302,389

AZO COMPOUNDS DERIVING FROM AMINO BENZOIC ACID ANILIDES AND ACETOACETYLAMINO-BENZIMIDAZOLONE

Klaüs Hünger, and Manfred Pesenacker, both of Kelkheim, Fed. Rep. of Germany, assignors to Hoechst Aktiengesellschaft, Frankfurt am Main, Fed. Rep. of Germany

Filed Oct. 18, 1979, Ser. No. 86,126

Claims priority, application Fed. Rep. of Germany, Oct. 21, 1978, 2845947

Int. Cl.[3] C09B *29/01, 29/32;* D06P *1/44*

U.S. Cl. 260—157 1 Claim

1. A compound of the formula

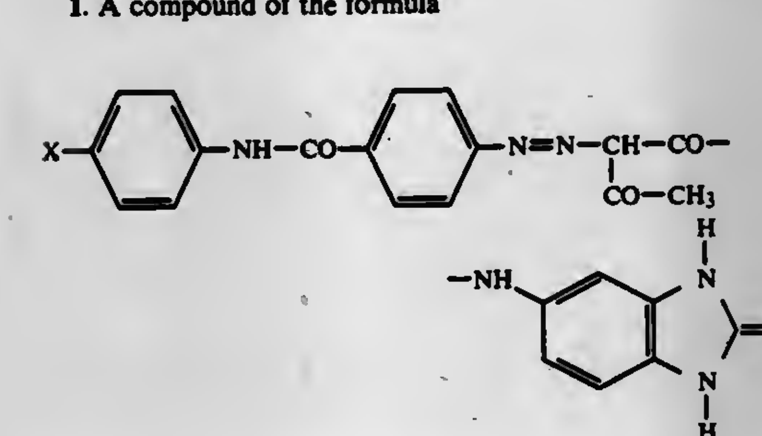

wherein X is carbamoyl or acetamino.

4,302,390

AZO DYES WITH SULFATE GROUPS ON THE DIAZOTIZED 2-AMINO THIAZOL AND 5-AMINO ISOTHIAZOL MOIETY AND WITH ANILINE, TETRAHYDROQUINOLINE AND BENZOMORPHOLINE COUPLERS

Ralph R. Giles, and Max A. Weaver, both of Kingsport, Tenn., assignors to Eastman Kodak Company, Rochester, N.Y.

Filed Dec. 5, 1979, Ser. No. 100,629

Int. Cl.[3] C09B *29/036, 29/09, 29/32, 29/36*

U.S. Cl. 260—158 3 Claims

1. A dye of the formula:

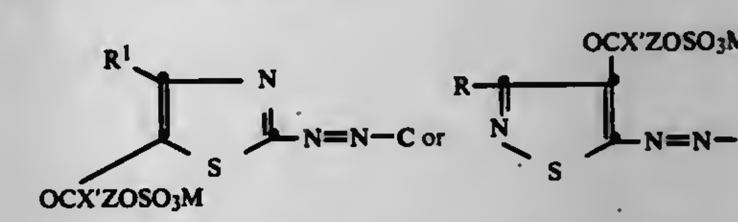

wherein R^1 is selected from hydrogen, alkyl, cyclohexyl, 2-thienyl, 2-furyl, phenyl, and phenyl substituted with alkoxy, thiocyano, alkylthio, carbamoyl, alkylcarbamoyl, alkanoyl, alkylsulfonyl, sulfamoyl, SO_2NH(alkyl), SO_2N(dialkyl), alkylsulfonamido, alkanoylamino, halogen, trifluoromethyl or SO_3(aryl); R is selected from hydrogen, halogen, alkyl, alkylsulfonyl, phenyl, and phenyl substituted with alkyl, alkoxy or halogen; C is a coupler selected from

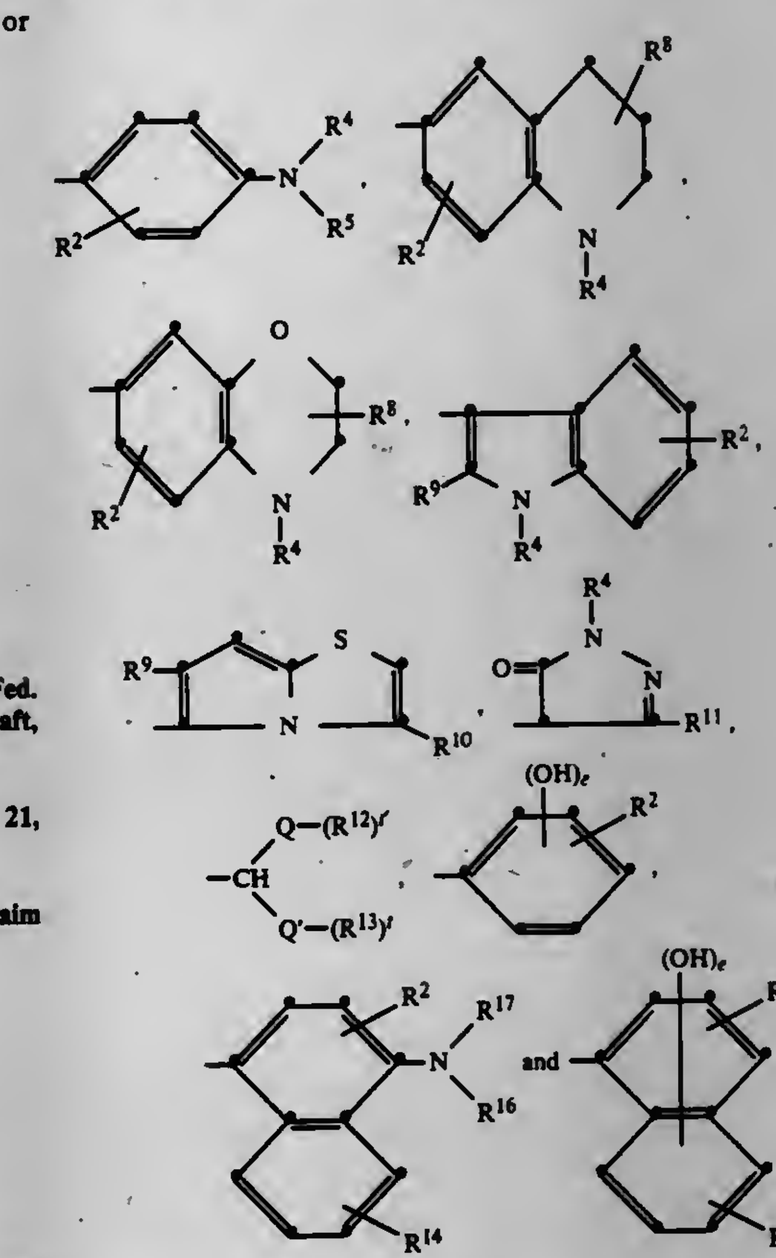

wherein R^2 and R^{14} each represents up to three groups selected from hydrogen, fluorine, chlorine, bromine, alkyl, cycloalkyl, alkoxy, phenoxy, alkylthio, arylthio, and radicals having the formula —NH—X—R^3 in which X is —CO—, —COO—, or —SO_2— and R^3 is selected from alkyl and alkyl substituted

with halogen, hydroxy, phenoxy, aryl, cyano, cycloalkyl, alkylsulfonyl, alkylthio, alkanoyloxy, and alkoxy, and when X is —CO—, R^3 also is selected from hydrogen, amino, alkylamino, dialkylamino, arylamino, aryl, and furyl;

R^4 and R^5 are each selected from hydrogen, alkyl, aryl, cycloalkyl, and alkyl substituted with halogen, CN, OH, alkoxy, aryloxy, alkoxyalkoxy, alkanoyl, alkanoyloxy, carbamoyl, alkylcarbamoyl, sulfamoyl, alkylsulfamoyl, alkoxyalkanoyloxy, and cycloalkyl, and R^4 and R^5 together represent a single, combined group —$CH_2CH_2CH_2CH_2CH_2$—, —$CH_2CH_2OCH_2CH_2$—, —CH_2CH_2—S—CH_2CH_2—, or —CH_2C-H_2—SO_2—CH_2CH_2—,

R^8 represents one or two groups each selected from hydrogen, alkyl and alkyl substituted with —CN, alkoxy, alkoxycarbonyl, alkoxycarbonyloxy, phenyl, cyclohexoxy, —OH, —Cl and Br;

R^9, R^{10} and R^{11} are each selected from hydrogen, alkyl, phenyl, or phenyl substituted with 1-3 groups selected from Cl, Br, alkyl or alkoxy, alkylthio, benzylthio, cyclohexylthio and phenylthio;

Q and Q' are each selected from —CO—, —SO_2—, or —CN; R^{12} and R^{13} are each selected from alkyl, hydroxyalkyl, alkoxy, alkoxycarbonylamino, trifluoromethyl, phenyl or phenyl substituted with 1-3 groups selected from Cl, Br, alkyl or alkoxy, alkoxycarbonylalkyl, cyanoalkyl, amino, haloalkyl, alkylamino, alkylthio, benzylthio, cyclohexylthio and phenylthio; and R^{12} and R^{13} together comprise —$CH_2C(CH_3)_2CH_2$—, or 1,2—C_6H_4— connecting Q and Q'; R^{16} and R^{17} are selected from hydrogen, cycloalkyl, aryl, alkyl, and alkyl substituted with alkoxy, hydroxy, alkoxyalkoxy, hydroxyalkoxy, carbamoyl, sulfamoyl, alkanoylamino, or alkenylsulfonyl, and aryl substituted with hydroxyalkyl; e is 1 or 2; t and t' are each 1 or zero; X' is O, NH, N(alkyl)-, or N(aryl)-; Z is selected from straight- or branched-chain alkylene, and such alkylene substituted with phenyl, halogen, OSO_3M, alkoxy or aryloxy groups, —$CH_2(CH_2)_m$V—$CH_2(CH_2)_p$—, where m is 1, 2 or 3, p is 0, 1, 2 or 3, and V is O, S, SO_2, —SO_2NH—, —SO_2N(alkyl)-, —SO_2N(aryl), —N(SO_2 aryl)-, —NH, —NHCO—, —NHCONH, —N(SO_2 alkyl), or —CON(alkyl); M is H, Na, K or NH_4; n is 1 or 2; and wherein each of the above alkyl and alkoxy groups contain from 0 to three of the following: hydroxy; halogen; cyano; succinimido; glutarimido; phthalimido; 2-pyrrolidono; cyclohexyl; phenyl or phenyl substituted with alkyl, alkoxy, halogen, alkanoylamino, cyano or alkoxycarbonyl; alkanoylamino; sulfamoyl; alkylsulfamoyl; vinylsulfonyl; acrylamido; phthalimidinyl; benzosulfonicimidyl; alkylsulfonamido; phenylsulfonamido; alkoxycarbonylamino; alkylcarbamoylxoy; alkoxycarbonyl; alkoxycarbonyloxy;

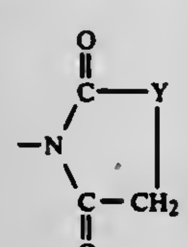

wherein Y is —NH—, —NH—alkyl-, —O—, —S—, or —CH_2O—; —S—R^6, wherein R^6 is alkyl, phenyl, phenyl substituted with halogen, alkyl, alkoxy, alkanoylamino, cyano, or alkoxycarbonyl, pyridyl, pyrimidinyl, benzoxazolyl, benzimidazolyl, benzothiazolyl, or

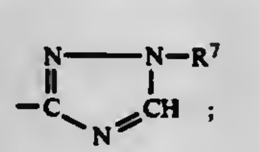

—SO_2R^3; —$COOR^3$; —OXR^3, —NH—X—R^3; —X—R^3; —$SO_2NR^7R^7$; wherein R^3 and X are as defined above and each R^7 is selected from H and R^3; alkoxy; alkoxy substituted with hydroxy, cyano, alkanoyloxy, or alkoxy; phenoxy; or phenoxy substituted with one or more of alkyl, alkoxy or halogen.

4,302,391

UNSYMMETRICAL AZETIDINONE ALDEHYDE DISULFIDES AND PROCESS

Stjepan Kukolja, Carmel, and Janice L. Pfeil, Indianapolis, both of Ind., assignors to Eli Lilly and Company, Indianapolis, Ind.

Filed Apr. 7, 1980, Ser. No. 137,861

Int. Cl.³ C07D *205/08, 498/04, 403/12, 405/12*

U.S. Cl. 260—239 A 14 Claims

1. A compound of the formula;

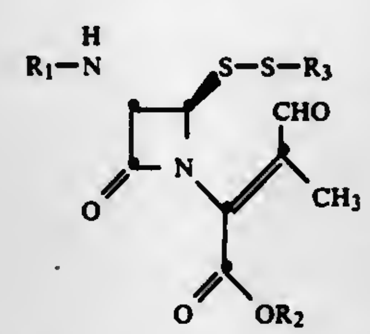

I

wherein R_1 is an acyl group of the formula

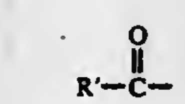

wherein R' is

(a) C_1-C_7 alkyl, cyanomethyl, C_1-C_6 haloalkyl, 4-protected amino-4-protected carboxybutyl; or

(b) C_1-C_6 alkoxy, phenoxy, benzyloxy or 4-methoxybenzyloxy; or

(c) the group —R" wherein R" is phenyl or substituted phenyl wherein the substituents are 1 or 2 halogens, protected hydroxy, cyano, trifluoromethyl, C_1-C_4 alkyl, C_1-C_4 alkoxy, protected carboxy, protected carboxymethyl, protected hydroxymethyl or protected aminomethyl; or

(d) an arylalkyl group of the formula

R"—$(O)_m$—CH_2—

wherein R" is as defined above, and m is 0 or 1; or

(e) a substituted arylalkyl group of the formula

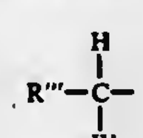

wherein R''' is R" as defined above, 2-thienyl, 3-thienyl, 2-furyl or 3-furyl; W is protected hydroxy, protected carboxy, protected amino; or

(f) a heteroarylmethyl groups of the formula

R''''—CH_2—

wherein R'''' is 2-thienyl, 3-thienyl, 2-furyl, 3-furyl, 2-thiazolyl, 5-tetrazolyl, 1-tetrazolyl;

R_2 is a carboxy protected group and R_3 is phenyl or a monosubstituted phenyl group, where the substituents are chloro, methoxy, methyl, or acetoxy.

4,302,392

POLYMERS CONTAINING CHEMICALLY BONDED METAL ATOMS

Robert C. Shaffer, Playa Del Ray, Calif., assignor to HITCO, Irving, Calif.

Continuation-in-part of Ser. No. 893,622, Apr. 5, 1978, Pat. No. 4,185,043, which is a continuation-in-part of Ser. No. 714,403, Aug. 16, 1976, Pat. No. 4,087,482. This application Oct. 12, 1979, Ser. No. 84,310

Int. Cl.³ C07D *207/04*

U.S. Cl. 260—326.22 6 Claims

1. The reaction product of a carboxylic acid or anhydride and a metal complex which is a reaction product of tungsten carbonyl and/or molybdenum carbonyl with pyrrolidine.

4,302,393

FLUORAN COMPOUNDS

Robert Garner, Bury, England, and Jean C. Petitpierre, Kaiseraugst, Switzerland, assignors to Ciba-Geigy Corporation, Ardsley, N.Y.

Continuation of Ser. No. 944,219, Sep. 20, 1978, abandoned, which is a continuation-in-part of Ser. No. 822,477, Aug. 8, 1977, abandoned, which is a continuation of Ser. No. 670,780, Mar. 26, 1976, abandoned, which is a continuation of Ser. No. 471,269, May 20, 1974, abandoned. This application Nov. 9, 1979, Ser. No. 92,830

Claims priority, application United Kingdom, May 21, 1973, 24079/73

Int. Cl.³ C07D *311/86;* B41M *5/16, 5/18, 5/22*

U.S. Cl. 260—335 7 Claims

1. A fluoran compound of the formula

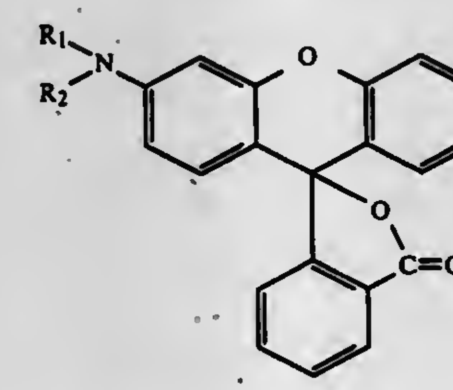

(I)

wherein R_1 and R_2 represent alkyl of 1 to 4 carbon atoms, R_3 represents n-alkyl of 8 to 12 carbon atoms and R_4 represents hydrogen, n-alkyl of 6 to 12 carbon atoms or benzyl.

4,302,394

PRODUCTION OF BUTYROLACTONE

Alan J. Dennis, Middlesbrough, England, assignor to Davy McKee (Oil & Chemicals) Limited, London, England

Filed Apr. 11, 1980, Ser. No. 139,592

Claims priority, application United Kingdom, Apr. 11, 1979, 12850/79

Int. Cl.³ C07D *307/32*

U.S. Cl. 260—343.6 10 Claims

1. A process for the production of butyrolactone which comprises oxidizing an aldehyde-ether of the general formula:

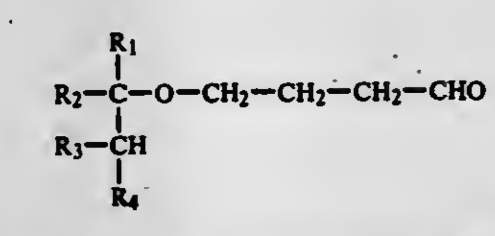

(I)

wherein R_1 and R_2 each, independently of the other, represent a C_1 to C_4 alkyl radical, and R_3 and R_4 each, independently of the other, represent a hydrogen atom or a C_1 to C_3 alkyl radical, or wherein R_1 represents a C_1 to C_4 alkyl radical, R_2 and R_3 together with the carbon atoms to which they are attached form a 5-membered or 6-membered cycloaliphatic ring, and R_4 represents a hydrogen atom or a C_1 to C_3 alkyl radical, to form an acid-ether of the general formula:

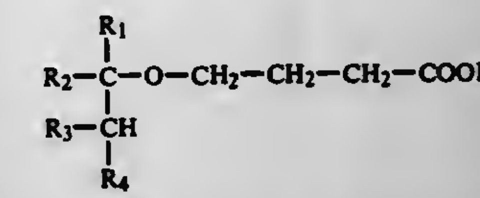

(II)

wherein R_1, R_2, R_3 and R_4 are as defined above, followed by deetherification and cyclization.

6. A proccess for the production of butyrolactone which comprises (a) reacting allyl alcohol with an olefin of the general formula:

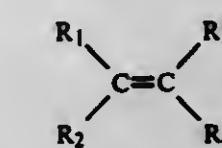

(IV)

wherein R_1 and R_2 each, independently of the other, represent a C_1 to C_4 alkyl radical, and R_3 and R_4 each, independently of the other, represent a hydrogen atom or a C_1 to C_3 alkyl radical, or wherein R_1 represents a C_1 to C_4 alkyl radical, R_2 and R_3 together with the carbon atoms to which they are attached form a 5-membered or 6-membered cycloaliphatic ring, and R_4 represents a hydrogen atom or a C_1 to C_3 alkyl radical, to form an allyl ether of the general formula:

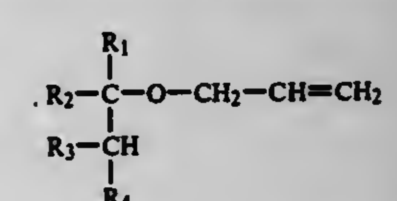

(III)

wherein R_1, R_2, R_3 and R_4 are as defined above;

(b) contacting resulting allyl ether of the general formula (III) with hydrogen and carbon monoxide under hydroformylation conditions in the presence of a catalytic amount of a hydroformulation catalyst;

(c) oxidising resulting aldehyde-ether of the general formula:

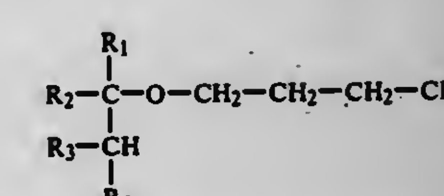

(I)

wherein R_1, R_2, R_3 and R_4 are as defined above to form an acid-ether of the general formula:

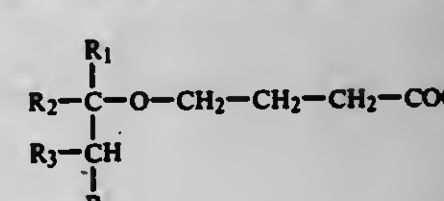

(II)

wherein R_1, R_2, R_3 and R_4 are as defined above;

(d) subjecting resulting acid-ether of the general formula (II) to deetherification, dehydration and cyclisation conditions;

(e) recovering resulting butyrolactone and regenerated olefin of the general formula (IV); and

(f) recycling resulting regenerated olefin of the general formula (IV) to step (a).

4,302,395
LACTONE OXAZOLINES AS OLEAGINOUS ADDITIVES

Stanley J. Brois, Westfield, and Antonio Gutierrez, Hamilton Square, both of N.J., assignors to Exxon Research & Engineering Co., Florham Park, N.J.

Division of Ser. No. 967,289, Dec. 7, 1978, Pat. No. 4,221,720, which is a division of Ser. No. 806,326, Jun. 13, 1977, Pat. No. 4,167,514, which is a division of Ser. No. 726,206, Sep. 24, 1976, Pat. No. 4,062,786. This application Jul. 11, 1980, Ser. No. 167,481

Int. Cl.[3] C07D *307/32*

U.S. Cl. 260—343.6 **3 Claims**

1. A thiol substituted lactone acid obtained by reacting a molar proportion of a hydrocarbon-substituted C_4–C_{10} mono-unsaturated dicarboxylic acid anhydride with about one molar proportion of a functionalizing agent being a per acid oxidizing agent whereby an epoxide derivative is produced and thereafter reacting said product with an equimolar proportion of a thiol at a temperature of from about −20° C. to 100° C.

4,302,396
CHLORINATED 4-METHYLPHTHALIC ANHYDRIDES

Michihiro Tsujimoto, Tachikawa; Tsutomu Nishizawa, Kamakura; Kiyoharu Hasegawa, Yokohama, and Nobuyoshi Abe, Machida, all of Japan, assignors to Mitsui Toatsu Chemicals, Incorporated, Tokyo, Japan

Filed Apr. 24, 1978, Ser. No. 886,563

Claims priority, application Japan, Apr. 6, 1977, 52-38563

Int. Cl.[3] C07C *63/16;* **C07D** *307/89*

U.S. Cl. 260—346.3 **1 Claim**

1. 3,5,6-Trichloro-4-methylphthalic acid or its anhydride.

4,302,397
PREPARATION OF FURFURYL ALCOHOL FROM FURFURAL

Leo J. Frainier, and Herman Fineberg, both of Columbus, Ohio, assignors to Ashland Oil, Inc., Ashland, Ky.

Division of Ser. No. 15,574, Feb. 26, 1979, Pat. No. 4,251,396. This application Aug. 20, 1980, Ser. No. 180,076

Int. Cl.[3] C07D *307/44*

U.S. Cl. 260—347.8 **2 Claims**

1. Method of preparing furfuryl alcohol from furfural comprising hydrogenating furfural in the presence of a copper chromite catalyst at a temperature not greater than 200° C. and under pressure wherein said copper chromite catalyst is prepared by a process comprising forming a basic copper ammonium chromate complex by precipitation by adding a hydroxide to a solution of a copper-containing salt and a chromium containing salt until the solution has a pH between 7 and 7.5, heating the complex formed until decomposition of the complex occurs and maintaining the decomposing complex at a temperature around or below 300° C. until decomposition is complete.

4,302,398
CYCLIC COMPOUNDS

Cedric H. Hassall, Hatfield; Michael J. Broadhurst, Baldock, and Gareth J. Thomas, Luton, all of England, assignors to Hoffmann-La Roche Inc., Nutley, N.J.

Filed Aug. 6, 1980, Ser. No. 175,724

Claims priority, application United Kingdom, Aug. 20, 1979, 28889/79; Jul. 21, 1980, 23715/80

Int. Cl.[3] C07C *50/16, 107/02*

U.S. Cl. 260—365 **11 Claims**

1. A process for the manufacture of compounds of the formula

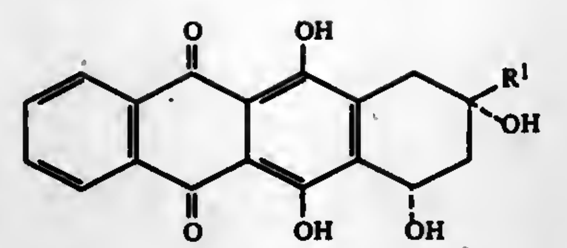

I

wherein R^1 is selected from the group consisting of an esterified carboxy group and a group of the formula

$$\begin{array}{c} R^2 \quad R^3 \\ \diagdown \; \diagup \\ -C-CH_2-X \end{array} \qquad (a)$$

in which R^2 and R^3 together are an oxo group or a ketal or thioketal group and X is selected from the group consisting of a hydrogen atom, a hydroxy group, an acyloxy group, and

$$-(CH_2)_n-OY \qquad (b)$$

in which n stands for 1 or 2 and Y is selected from the group consisting of a hydrogen atom, lower alkyl and an acyl group,

which process comprises subjecting a compound of the formula

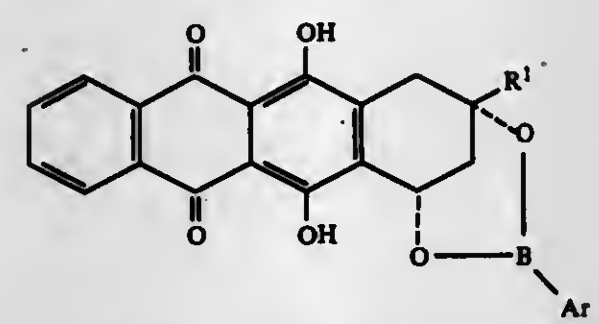

II

wherein R^1 is as above and Ar represents an aryl group, to an ester exchange with a 1,3-diol.

4,302,399
ACETYLATION OF CRUDE REACTION PRODUCTS CONTAINING POLYMERIC COLORANTS

Daniel J. Dawson, Menlo Park; Robert E. Wingard, and Guy A. Crosby, both of Palo Alto, all of Calif., assignors to Dynapol, Palo Alto, Calif.

Continuation of Ser. No. 947,163, Sep. 28, 1978, abandoned, which is a continuation of Ser. No. 743,203, Nov. 19, 1976, abandoned. This application Mar. 10, 1980, Ser. No. 128,718

Int. Cl.[3] C09B *1/40, 5/42, 43/12, 51/00*

U.S. Cl. 260—377 **8 Claims**

1. The process which comprises:

(a) contacting a liquid mixture comprising 0.1 to 10% by weight of polymeric colorant containing anionic water-solubilizing groups selected from the group consisting of sulfonate groups, carboxylate groups, sulfamate groups and phosphonate groups; and comprising a nonchromophoric organic polymer backbone to which is covalently bonded a plurality of units of organic chromophore and a plurality of residual primary or secondary alkyl nitrogens, 60–98% by weight aqueous solvent, 0.2–30% by weight unattached organic chromophore and byproducts of the polymeric colorant preparation, with from 1 to 6 equivalents of acetic anhydride per mole of primary and secondary alkyl amines on said polymeric colorant, said contacting being effected at a pH of 9-13, a temperature of from 0° to 10° C. and for a time of from 1 to 60 minutes, thereby acetylating said primary and secondary alkyl amines to amides and forming an acetylated polymeric colorant in which the number of said primary or secondary alkyl nitrogens present in acetylated form as amides is at least twice the number of said primary or secondary alkyl nitrogens present as unacetylated amines and the number of anionic water-solubilizing groups is at least three times the number of said residual primary or secondary alkyl nitrogens present as unacetylated amines, and

(b) recovering said acetylated polymeric colorant.

4,302,400
HETERONUCLEAR NOBLE METAL CLUSTER CATALYSTS

Gary B. McVicker, Westfield, N.J., assignor to Exxon Research & Engineering Co., Florham Park, N.J.

Division of Ser. No. 101,423, Dec. 10, 1979, which is a division of Ser. No. 924,161, Jul. 13, 1978, Pat. No. 4,217,249. This application May 5, 1980, Ser. No. 147,064

Int. Cl.[3] C07F *15/00*

U.S. Cl. 260—429 R **2 Claims**

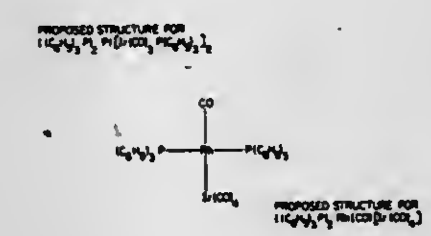

1. A heteronuclear noble metal carbonyl cluster complex of the formula:

$$((C_6H_5)_3P)_2Pt[Ir(CO)_3P(C_6H_5)_3]_2$$

which exhibits the following characteristic infrared pattern (cm^{-1}) in THF solution:

2014 sh
1995 sh
1982 sh
1962 vs
1934 sh
1906 m-s
1800 w
1764 sh.

2. A heteronuclear noble metal carbonyl cluster complex of the formula:

$$((C_6H_5)_3P)_2Rh(CO)[Ir(CO)_4]$$

which exhibits the following characteristic infrared pattern (cm^{-1}) in THF solution:

2042 w
1995 sh
1987 vs
1962 sh
1932 m.

4,302,401
TETRAALKYL PHOSPHONIUM SUBSTITUTED PHOSPHINE AND AMINE TRANSITION METAL COMPLEXES

Alexis A. Oswald, Mountainside, N.J., assignor to Exxon Research & Engineering Co., Florham Park, N.J.

Filed Jan. 23, 1980, Ser. No. 114,627

Int. Cl.[3] C07F *5/06*

U.S. Cl. 260—448 C **19 Claims**

3. A complex of the formula $[R_2PQP^+R^1{}_3Z^-]_b(MX_n)_s$ wherein each R is independently selected from an alkyl group containing from 1 to 30 carbon atoms and an aryl group containing from 6 to 10 carbon atoms; Q is a divalent organic radical selected from an alkylene radical and an alkylene radical the carbon chain of which is interrupted with ether oxygen or phenylene groups, wherein said alkylene radical contains from 1 to 30 carbon atoms; R^1 represents an alkyl group containing from 1 to 30 carbon atoms, wherein said R^1 groups can be the same or different; b is an integer of from 1 to 4; Z^- is an anion; M represents a Group VIII metal atom; X is an anion or organic ligand satisfying the coordination sites of the metal M; g times s is 1 to 6; n is 2 to 6; and s is 1 to 3.

4,302,402
PROCESS FOR THE PREPARATION OF OXIMINONITRILES

Jeffrey N. Labovitz, Palo Alto, Calif., assignor to Zoecon Corporation, Palo Alto, Calif.

Filed Sep. 11, 1980, Ser. No. 186,069

Int. Cl.[3] C07D *213/57;* **C07C** *120/04, 121/42, 121/78*

U.S. Cl. 260—465 E **13 Claims**

1. A process for the manufacture of oximinotriles which comprises the reaction of an oximinohalide with cyanide ion in an aqueous medium.

4,302,403
PROCESS FOR REACTING SULFURIC ACID AND AN AROMATIC HYDROCARBON TO PURIFY A DISULFONIC ACID PRODUCT OF AN AROMATIC HYDROCARBON

Kenneth G. Reabe, Delmont; Hans Dressler, Monroeville, and Frederick M. Covelli, Murrysville, all of Pa., assignors to Koppers Company, Inc., Pittsburgh, Pa.

Continuation of Ser. No. 30,597, Apr. 16, 1979, abandoned, and a continuation of Ser. No. 848,788, Nov. 7, 1977, abandoned, which is a continuation of Ser. No. 695,578, Jun. 14, 1976, abandoned. This application Jul. 23, 1980, Ser. No. 171,450

Int. Cl.[3] C07C *143/24*

U.S. Cl. 260—505 E **5 Claims**

1. A chemical purification process for removing unreacted sulfuric acid from a meta-benzene disulfonic acid product, which product is useful in the caustic fusion method of making resorcinol, the meta-benzene disulfonic acid product produced by reacting benzene or benzene monosulfonic acid with an excess of oleum, said purification process comprising:

(a) providing a mixture containing at least about 20 percent by weight of meta-benzene disulfonic acid and an amount of unreacted sulfuric acid;

(b) adding benzene to said mixture in an amount providing a molar ratio of said benzene to said unreacted sulfuric acid in said mixture in a range from about 0.25 to one to about 2 to one;

(c) maintaining the temperature of said mixture in a range from about 130° C. to about 200° C. during the reaction of said benzene and said unreacted sulfuric acid;

(d) allowing the reaction to proceed without removing water formed during reaction of said benzene and said unreacted sulfuric acid;

whereby there is produced purified meta-benzene disulfonic acid having little or no unreacted sulfuric acid.

4,302,404
VARIABLE VENTURI CARBURETOR

Norihiko Nakamura, Mishima, and Takashi Kato, Susono, both of Japan, assignors to Toyota Jidosha Kogyo Kabushiki Kaisha, Aichi, Japan

Filed Sep. 28, 1979, Ser. No. 80,116

Claims priority, application Japan, Oct. 20, 1978, 53-128328

Int. Cl.[3] F02M *9/06*

U.S. Cl. 261—44 C **9 Claims**

1. In a variable venturi carburetor having such a construction wherein a suction piston slides via a spring into and out from a suction chamber communicating with a mixing cham-

ber via a negative pressure path and has at its head a metering needle to face a metering jet, the improvement wherein said suction piston is shaped in such a fashion as to close a venturi section on the upstream side with respect to the base portion of

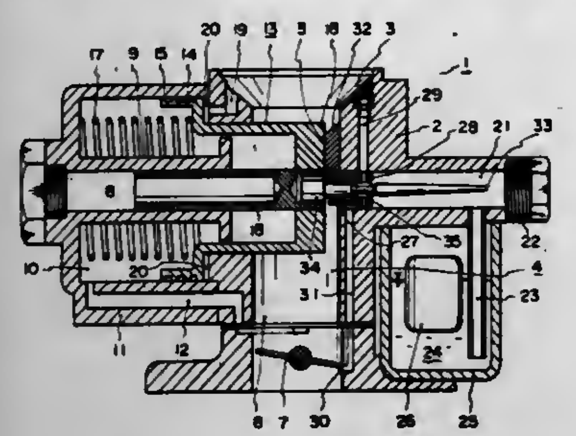

said metering needle at the time of stop of an engine, and said metering needle is tapered from its base portion to its tip and its section at the time of stop of the engine is made smaller than that at the time of idling.

4,302,405

VARIABLE VENTURI TYPE CARBURETOR

Tokuta Inoue; Norihiko Nakamura, both of Mishima, and Takaaki Itoh, Susono, all of Japan, assignors to Toyota Jidosha Kogyo Kabushiki Kaisha, Aichi, Japan

Filed Feb. 5, 1980, Ser. No. 118,961

Claims priority, application Japan, May 10, 1979, 54-56347

Int. Cl.³ F02M *9/06*

U.S. Cl. 261—44 C **5 Claims**

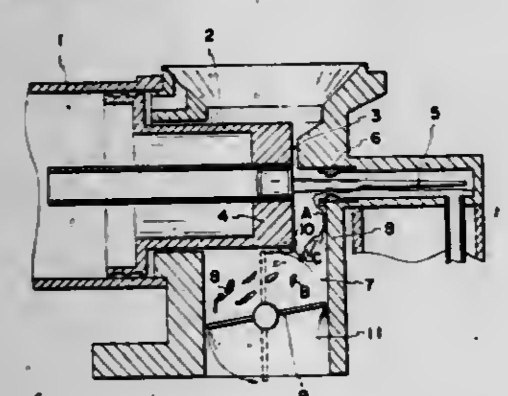

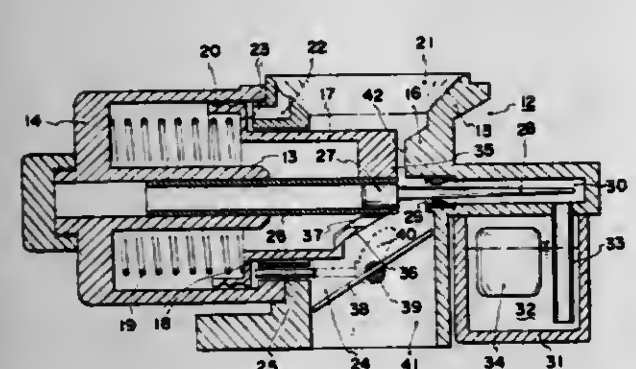

1. A variable venturi type carburetor having a suction chamber, a suction piston movable into and out of said suction chamber, a metering needle attached to the head portion of said suction piston, a metering jet faced by said metering needle and a throttle valve, said head portion of said suction piston confronting the venturi section defined at the upstream side of said throttle valve, characterized in that said head portion is obliquely cut or shaped at its one side opposing to said throttle valve to define an obliquely cut or shaped piston portion, and that said throttle valve is pivotally mounted at such a position relative to said piston that at least a portion of said throttle valve pivots during opening movement within space vacated by said obliquely cut or shaped piston portion as said piston moves in an opening direction.

4,302,406

APPARATUS FOR HEATING WATER IN A RESERVOIR

Joannes M. van Heel, Zevenbergen, Netherlands, assignor to Stichting Bouwcentrum, Zevenbergen, Netherlands

Filed Jun. 18, 1980, Ser. No. 160,626

Claims priority, application Netherlands, Jun. 29, 1979, 7905100

Int. Cl.³ B01F *3/04*

U.S. Cl. 261—124 **4 Claims**

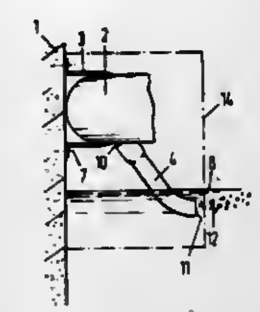

1. Apparatus for heating water in a reservoir comprising

a closed pipe system encircling at least part of the expanse of the reservoir interiorly thereof and said pipe system being disposed above but adjacent the water surface,

an air supply conduit in communication with said pipe system, there being embodied therewith means for supplying heated air to said supply conduit for communication thereof to said pipe system,

said pipe system having a plurality of outlets spaced therealong and said outlets facing downwardly angularly toward the surface of said water, and

a corresponding plurality of flexible hoses connected at one end to each outlet, each said hose in the absence of air flow therethrough extending downwardly into the water with the other end thereof submerged below the surface of said water, said hoses distending when air flows therethrough, the weight of said hoses establishing an equilibrium condition countering the buoyant effect of such air flow to maintain the said other ends of said hoses adjacent to but below said water surface.

4,302,407

HEATING OF COMBUSTIBLE MIXTURE GENERATORS FOR INTERNAL COMBUSTION ENGINES

Günter Härtel, Neuss, and Armin Schürfeld, Meerbusch, both of Fed. Rep. of Germany, assignors to Bosch & Pierburg System oHG, Neuss, Fed. Rep. of Germany

Filed Nov. 25, 1980, Ser. No. 210,293

Claims priority, application Fed. Rep. of Germany, Dec. 6, 1979, 2949041

Int. Cl.³ F02M *31/12*

U.S. Cl. 261—130 **12 Claims**

1. In a combustible mixture generator for an internal combustion engine, said generator including a tubular wall defining a main mixture flow path, a main throttle element mounted downstream of said wall, fuel metering means for metering fuel into said flow path near the upstream end thereof within said tubular wall, and heat exchanger means incorporated in said wall over at least a part of the length thereof, said heat exchanger means including means defining an annular heating water chamber, water inlet means adjacent one end of said chamber and water outlet means adjacent the other end of said chamber, the improvement comprising water ducting connected to said inlet and said outlet for connection to a cooling water circuit of said engine, said ducting containing thermally controlled valve means which is adapted to open at elevated

temperatures, said heat exchanger means being situated higher than said cooling water circuit whereby the level of said cooling water when said valve means is closed and said cooling water circuit of said engine is shut down is below said heat exchanger means, and said heat exchanger means including an internal wall bounding said main mixture flow path, said internal wall comprising electric resistance heating material, and said heat exchanger means further comprising electrical leads

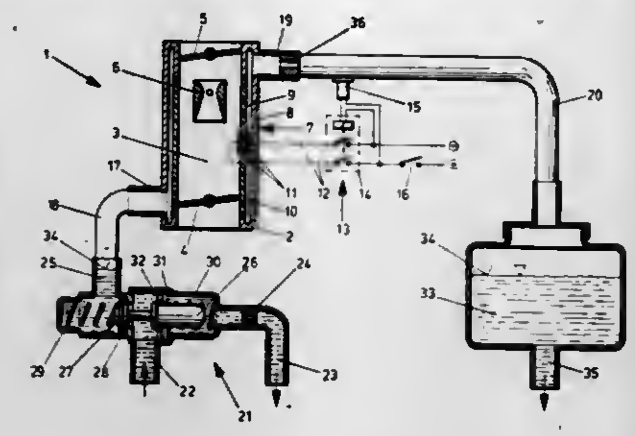

connected to said electric resistance heating material and adapted for connection to an electrical supply, and a thermally controlled electric control device in said leads, said electric control device being controlled in dependence upon the temperature of said cooling water, whereby said electric resistance heating material is heated electrically when said cooling water temperature is below a predetermined value and said material is disconnected from said supply when said cooling water temperature is above said value.

4,302,408

METHOD OF PRODUCING PYRO-ELECTRIC AND PIEZO-ELECTRIC ELEMENTS

Shoji Ichihara, Yokkaichi, and Iwao Seo, Ibaragil, both of Japan, assignors to Mitsubishi Petrochemical Co., Ltd., Tokyo, Japan

Filed Apr. 7, 1980, Ser. No. 137,963

Claims priority, application Japan, Apr. 11, 1979, 54/44515

Int. Cl.³ H01L *41/22*

U.S. Cl. 264—22 **38 Claims**

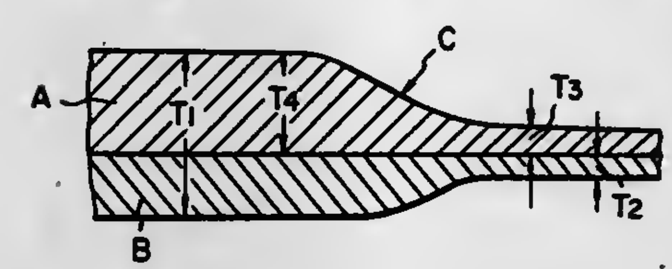

1. A method of manufacturing pyroelectric and piezoelectric elements in which at least one surface of a film of a polyvinylidene fluoride or copolymer of polyvinylidene fluoride is in close contact with a laminating resin having a breaking point for stretching equal to or greater than that of the polyvinylidene fluoride or copolymer of vinylidene fluoride and comprising a close contact laminated assembly, said close contact laminated assembly being stretched more than 3 times the thickness at least uniaxially at a temperature selected between 0° to 130° C. whereby the thickness of the stretched polyvinylidene fluoride or copolymer of polyvinydiene fluoride is less than 7 micron, and then polarizing said stretched film.

4,302,409

METHOD FOR THE EXTRUSION OF THERMOPLASTIC MATERIAL COMPOSITES

John C. Miller, Piscataway; Archibald L. Burnett, Warren, and Leonard S. Scarola, Union, all of N.J., assignors to Union Carbide Corporation, New York, N.Y.

Continuation-in-part of Ser. No. 55,059, Jul. 5, 1979, abandoned, which is a continuation-in-part of Ser. No. 859,923, Dec. 8, 1977, Pat. No. 4,169,679, which is a continuation of Ser. No. 713,121, Aug. 11, 1976, abandoned, which is a continuation-in-part of Ser. No. 610,240, Sep. 4, 1975, abandoned. This application Apr. 28, 1980, Ser. No. 144,049

Int. Cl.³ B29D *27/00*

U.S. Cl. 264—45.9 **9 Claims**

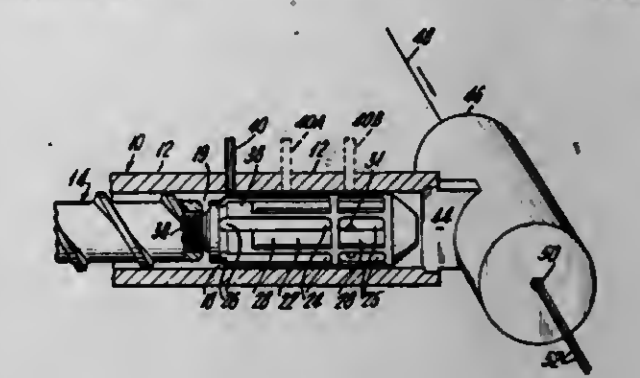

1. Method of producing a thermoplastic composite by dispersing a fluid additive within only a portion of a stream of thermoplastic material comprising the initial steps of

(a) flowing said stream of thermoplastic material into a channel having walls of substantially circular cross section, into which there has been placed a rotating mixer head having in the surface thereof a plurality of alternate lands and grooves each of said lands and grooves having an upstream end and a downstream end, said lands alternating with said grooves and being arranged in pairs, each of said pairs having a land in loose clearance with said wall followed by a land in close clearance with said wall, said mixer head having an unobstructed internal passage positioned therein over a substantial portion of its terminal length and a plurality of conduits severally connecting elongated zones between said land pairs and said hollow internal passage, and

(b) injecting said fluid additive into said channel at a position between said upstream and downstream ends of said lands and grooves with the result that within the mixer head the core of the composite contains no fluid additive and the shell about the core has fluid additive dispersed therein.

4,302,410

METHOD PRODUCING A COLOR CODED, CELLULAR THERMOPLASTIC RESIN COATED WIRE AND THE MATERIALS NECESSARY FOR THE COATING

Shirley Beach, North Vancouver, Canada, assignor to Phillips Cables Limited, Brockville, Canada

Continuation-in-part of Ser. No. 32,956, Apr. 24, 1979, which is a continuation of Ser. No. 851,200, Nov. 14, 1977, abandoned. This application Apr. 30, 1980, Ser. No. 145,122

Int. Cl.³ B29D *27/00*

U.S. Cl. 264—45.9 **25 Claims**

1. A method of producing a cable conductor wire insulated with a colour-coded, cellular thermoplastic electrically insulating polymer material in extruded form, which comprises:

providing a thermoplastic electrically insulating polymer material and a weighed amount of a particulate concentrate comprising weighed amounts of a particulate pigment composition and of a particulate, solid chemical blowing agent material in a polymer matrix compatible with said insulating polymer material,

introducing said polymer material and said particulate con-

centrate into a screw extruder barrel, containing a screw mounted for rotation therein, to form a mixture,
passing the mixture through said barrel,
heating and shearing the mixture in said barrel to melt said polymer material and form an intimate mixture of said pigment composition and said blowing agent material in said polymer material,
allowing said blowing agent to thermally decompose to a gaseous product,

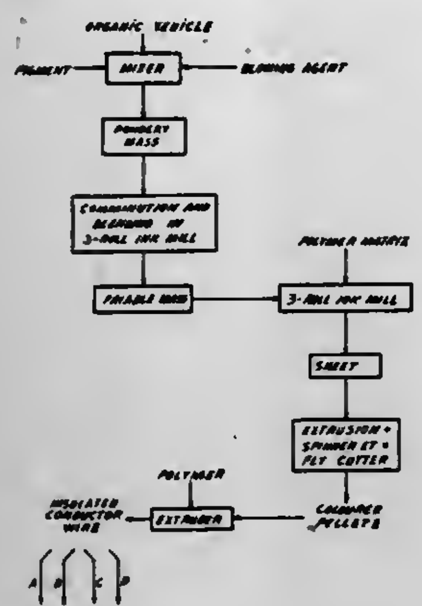

forcing the resulting molten mixture through an extrusion head and about a moving conductor wire to form an extruded coating thereon,
allowing the extruded coating to expand a predetermined amount, and
collecting the conductor wire insulated with colour-coded, cellular thermoplastic electrically insulating polymer material.

4,302,411
METHOD OF PRODUCING PLATE-SHAPED BODY
Tokihalu Nakagawa, Hirakata, and Shoji Ohmiya, Shijonawate, both of Japan, assignors to Matsushita Electric Industrial Co., Ltd., Osaka, Japan
Filed Jan. 14, 1980, Ser. No. 112,137
Claims priority, application Japan, Jan. 19, 1979, 54-5057
Int. Cl.³ B29D *17/00*
U.S. Cl. 264—107 **2 Claims**

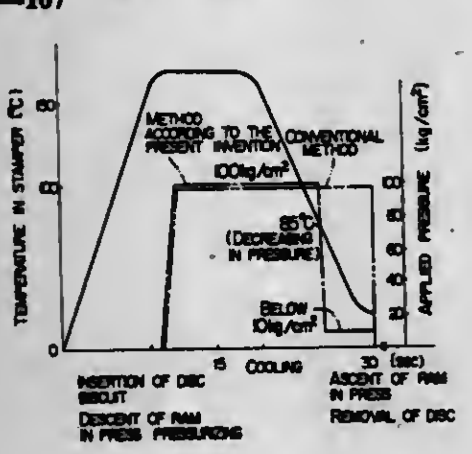

1. In a method for producing a plate-shaped body including the steps of pressing with a mold a thermoplastic resin which has been heated to a temperature above the softening point of said thermoplastic resin and then cooling said thermoplastic resin permitting hardening thereof to obtain said plate-shaped body, the improvement comprising the steps of decreasing the pressure of said mold to a pressure of 10/Kg/cm^2 when said thermoplastic resin has been cooled to a temperature in the vicinity of said softening point, holding said thermoplastic resin at said decreased pressure while further cooling thereof, and subseuently removing said thermoplastic resin from said mold.

4,302,412
METHOD FOR COMPACTING AN ARTICLE OF POWDER MATERIAL AND FOR EJECTING THE ARTICLE FROM A COMPACTING DIE
Raymond P. DeSantis, Royal Oak, Mich., assignor to PTX-Pentronix, Inc., Lincoln Park, Mich.
Continuation of Ser. No. 14,311, Feb. 23, 1979, abandoned, which is a division of Ser. No. 798,823, May 20, 1977, Pat. No. 4,166,716. This application Sep. 2, 1980, Ser. No. 183,011
Int. Cl.³ B30B *11/02*
U.S. Cl. 264—109 **9 Claims**

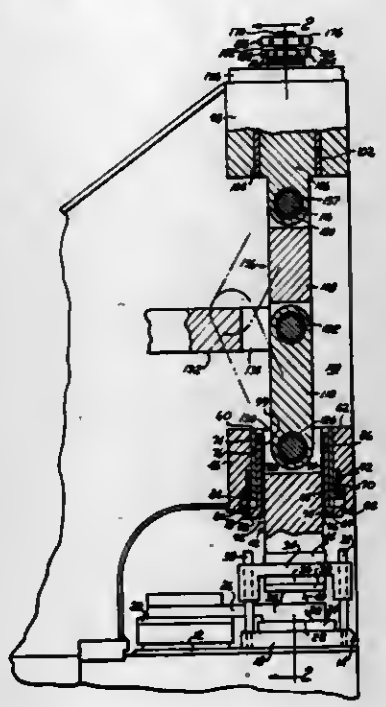

1. In a method for compacting an article made of powder material, wherein powder material is poured in a die cavity formed on the top of a reciprocating punch disposed in a die, and said powder material is compacted between the end face of said reciprocating punch and a solid wall obturating the open end of said die cavity, the improvement comprising filling said die cavity flush with said powder material, subsequently retracting said punch, subsequently introducing said solid wall into the open end of said die cavity, subsequently advancing said punch toward said solid wall while maintaining said solid wall stationary, subsequently advancing simultaneously said solid wall and said punch toward each other such that said solid wall advances toward said punch at a rate greater than that of the advance of said punch for compacting said article between said solid wall and said punch in said die cavity, and subsequently maintaining said solid wall in engagement with said compacted article while simultaneously displacing said solid wall and said punch at the same rate in a direction ejecting said compacted article from said die cavity.

4,302,413
PROCESS FOR PREPARING EXTRUDABLE POLYIMIDE GRANULES
David M. Howe, Abington; Jeffrey B. Otto, and Richard T. Traskos, both of Brooklyn, all of Conn., assignors to Rogers Corporation, Rogers, Conn.
Filed Nov. 16, 1978, Ser. No. 961,095
Int. Cl.³ B27J *5/00*
U.S. Cl. 264—126 **14 Claims**

1. A method of making aromatic heterocyclic polymer granules particularly useful in continuous processes such as extrusion, the method comprising:
heating and compacting a powder comprising aromatic heterocyclic polymer particles to form a mass; and
dividing said mass to form granules of polymer.

4,302,414
METHOD OF INCORPORATING MULTIFILAMENT STRANDS OF CARBON FIBERS INTO CEMENT TO PRODUCE REINFORCED STRUCTURES HAVING IMPROVED FLEXURAL STRENGTHS
Richard D. Carnow, and Christopher G. Cowie, both of Bristol, England, assignors to Union Carbide Corporation, New York, N.Y.
Continuation of Ser. No. 100,456, Dec. 5, 1979, abandoned, which is a continuation of Ser. No. 865,627, Dec. 29, 1977, abandoned. This application Oct. 27, 1980, Ser. No. 201,077
Int. Cl.³ B28B *21/56*
U.S. Cl. 264—137 **5 Claims**

1. A process for producing a carbon fiber-reinforced cementitious structure having improved flexural strength which comprises filling a mould with a cementitious mix to a desired level so as to form a first layer, impregnating multifilament strands of carbon fiber with a liquid hydrophobic resin system, arranging said impregnated strands in substantially parallel rows along a length of the mould in contact with the surface of said first layer of cement, adding a second layer of the cementitious mix to said first layer while said first layer is still in the uncured condition and in such manner that the cementitious mix of said second layer also contacts said impregnated strands thereby to enclose the same in cement, and simultaneously curing the hydrophobic resin and cementitious mix to produce said carbon fiber-reinforced cementitious structure.

4,302,415
METHOD OF FORMING FOAM ARTICLES FROM A FOAM THERMOPLASTIC WEB
Connie Lake, Tinley Park, Ill., assignor to Creative Industries, Inc., Bridgeview, Ill.
Filed Apr. 16, 1979, Ser. No. 30,313
Int. Cl.³ B29D *27/00;* B29C *17/04;* B26F *3/08*
U.S. Cl. 264—138 **9 Claims**

1. A process of forming a foam thermoplastic article from a web of foam thermoplastic material comprising the steps of:
intermittently advancing a foam thermoplastic web through an oven,
heating the web to a forming temperature while advancing through the oven,
entrapping a portion of the web between heat-absorbing male and female molds and thereby forming the article to the form of said molds,
providing a heat-trimmer along the leading and trailing ends of at least one mold and heating the heat trimmer to the melting temperature of the foam thermoplastic material,
heat-trimming the article along the leading and trailing ends thereof by melting substantially contemporaneously with the forming of the article by said molds by advancing the heat-trimmer to the web along the leading and trailing ends of the article and melting or vaporizing the leading and trailing ends of the article and defining the margins of the trimming operation by absorbing the heat of melting by said molds,
retaining the formed article to the web along the side margins of the web,
separating the molds and advancing the web and article to a trimming station,
and trimming the article from the web along the side margins of the article by trim tools at the trim station.

4,302,416
METHOD AND APPARATUS FOR MOLDING POLYURETHANE SOLES FOR FOOTWEAR
Guy Rudolf, 10 Jean Drouilly, Vernon, and Giuliano Frau, 3 Les Bruyeres, St. Nom la Breteche, both of France
Filed Sep. 25, 1979, Ser. No. 78,720
Int. Cl.³ A43D *65/00*
U.S. Cl. 264—244 **13 Claims**

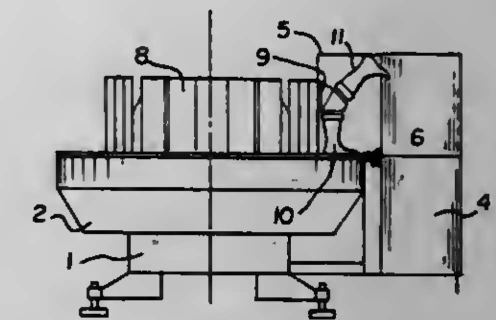

1. A method of molding two component soles for footwear of polyurethane in an apparatus including a turntable carrying molds, said method comprising the steps of (a) molding a first sole portion at a first molding station in a first position on one side of said turntable; (b) moving the first sole portion along a path of travel such that it returns to a second position at said first molding station on said one side of the turntable after a predetermined period of time permitting at least partial curing of said first sole portion; (c) simultaneously molding a second sole portion on said first sole portion at said second position to complete a sole and molding another, separate first sole portion at said first position at said first molding station on said one side of the turntable; and (d) repeating steps (a) to (c) an indefinite number of times, whereby first and second sole portions are continuously molded separately and simultaneously at a single molding station on one side of the turntable.

4,302,417
SHAPING SHEETS OF HEAT-SOFTENABLE MATERIAL
Donald P. Michelotti, Pittsburgh, Pa., assignor to PPG Industries, Inc., Pittsburgh, Pa.
Filed May 22, 1980, Ser. No. 152,280
Int. Cl.³ C03B *21/02, 23/023, 23/025;* B29C *17/02*
U.S. Cl. 264—322 **50 Claims**

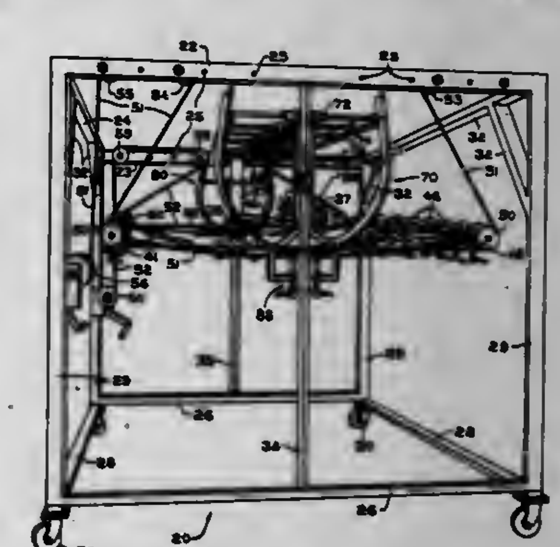

1. A method of shaping a sheet of heat-softened material

comprising clamping a pair of opposite side edges of said sheet between a pair of clamping elements,

suspending said clamps from suspended cable means,

supporting said sheet so that its opposite end portions are clamped against a pair of shaping members of curved configuration defining the cross-sectional shape desired for the opposite end portions of said sheet,

heating said sheet to its deformation temperature to heat-soften said sheet,

applying force against said sheet through said shaping members, thereby causing said suspended cable means to move closer to one another, and

moving said clamps into closer spacing to one another to wrap said opposite end portions of said heat-softened sheet around said shaping members to shape said sheet end portions to their desired shape.

4,302,418

PROCESS FOR SURFACE FINISHING INSOLUBLE PLASTICS

Herbert M. Callis, Silver Spring, and Frederick Klaiber, Laurel, both of Md., assignors to Baxter Travenol Laboratories, Inc., Deerfield, Ill.

Continuation of Ser. No. 909,548, May 25, 1978, abandoned. This application Jan. 7, 1980, Ser. No. 110,175

Int. Cl.³ B29C ***25/00***

U.S. Cl. 264—341 **12 Claims**

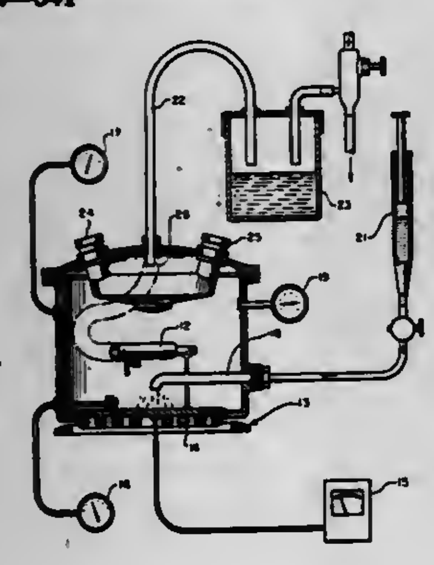

1. A process for surface finishing inert, insoluble plastic component parts, comprising:

selecting a component part made of an inert, insoluble plastic material, said plastic material being substantially insoluble in organic solvents including a selected fluid medium at room temperature and being soluble in organic solvents including said fluid medium at standard, substantially atmospheric pressure only when heated to a temperature at which the part will deform;

preheating said component part to a selected temperature;

placing said preheated component part within a substantially gas-tight environment;

adding said selected fluid medium to said substantially gas-tight environment; said fluid medium being liquid at room temperature and being vaporizable within said environment at a treatment temperature below said temperature at which the component part will deform, and said selected fluid medium being a fluid in which the inert, insoluble plastic component is insolubilizable at room temperature and at all temperatures below said temperature at which the component part will deform;

heating said added selected fluid medium to said treatment temperature while said environment is maintained gas-tight to vaporize said fluid medium and to develop a positive vapor pressure within said substantially gas-tight environment, said vapor pressure forming a treatment pressure within said substantially gas-tight environment that is greater than said standard, substantially atmospheric pressure, said treatment pressure being between about 3½ to 15 pounds per square inch (gauge);

contacting the preheated component part, while at a temperature less than the treatment temperature, with said fluid medium at said greater than atmosphere treatment pressure to liquify the surfaces of said part while within said gas tight pressurized environment; and

solidifying said liquified surfaces of said component part.

4,302,419

CATALYTIC RECOMBINER SYSTEM

Richard F. Abrams, Westborough; Stuart Motew, Bolton; Robert Wojnarowski, Andover, and Zygmunt Wachta, Boston, all of Mass., assignors to Helix Technology Corporation, Waltham, Mass.

Filed Feb. 13, 1980, Ser. No. 121,025

Int. Cl.³ G21C ***19/00;*** **C01B** ***5/00***

U.S. Cl. 422—62 **10 Claims**

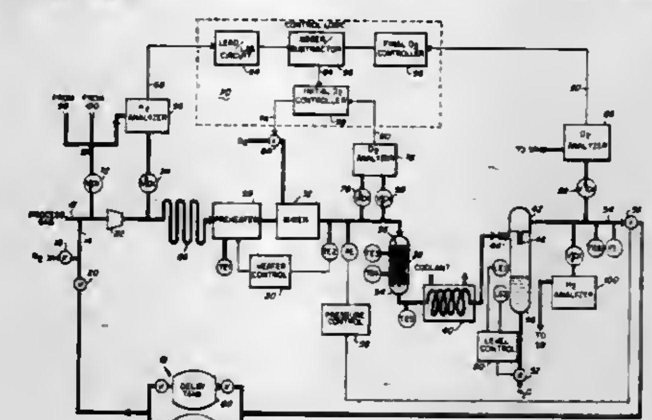

1. In a recombiner system in which first and second components of a gas mixture are combined in a reactor, the improvement comprising:

a first component gas analyzer for providing an indication of the amount of said first component in an inlet gas stream upstream from the reactor;

a gas flow passage from the first component gas analyzer to a downstream mixing point where an amount of said second component is introduced into the gas stream, the gas flow passage providing a delay time T for the gas stream;

electronic control circuitry responsive to the first component indication to provide a second component signal indicative of the amount of said second component which must be introduced into the gas stream to provide a predetermined ratio of the first and second components; and

second component flow rate control means responsive to the second component control signal for introducing a second component gas flow into the gas stream at the mixing point, the time required to change the second component flow in response to a change in the first component at the gas analyzer closely matching the delay time T.

4,302,420

ANALYZER FEATURING A CONTACTING REFLECTOMETER

Raymond F. Jakubowicz, Rush, and Paul N. Schnipelsky, Rochester, both of N.Y., assignors to Eastman Kodak Company, Rochester, N.Y.

Filed Jan. 9, 1981, Ser. No. 223,559

Int. Cl.³ G01N ***1/28, 35/04***

U.S. Cl. 422—63 **14 Claims**

1. In an analyzer for measuring an analyte in a liquid by scanning a test element containing the liquid, said analyzer including a reflectometer having a face adapted to contact a test element during scanning and means for biasing the test element and said reflectometer face into contact with each other while the element is being scanned,

the improvement comprising removing means for removing a scanned test element from said reflectometer, said removing means including first means for moving said scanned element and said face out of contact with each

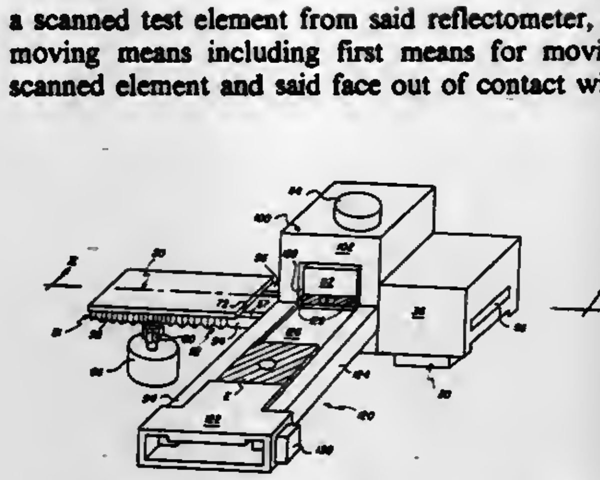

other, and second means for pushing said element across said face, said first means and said second means being configured and arranged so that said second means is operative only after said first means is operative.

4,302,421

METHOD AND APPARATUS FOR FLUSHING A DELIVERY TUBE FOR AUTOMATIC LIQUID SAMPLE SUPPLY APPARATUS

Stephen J. Baker, Cambridge, England, assignor to Pye (Electronic Products) Limited, Cambridge, England

Filed Feb. 22, 1980, Ser. No. 123,858

Claims priority, application United Kingdom, Feb. 27, 1979, 06832/79

Int. Cl.³ G01N ***35/06, 1/14***

U.S. Cl. 422—64 **17 Claims**

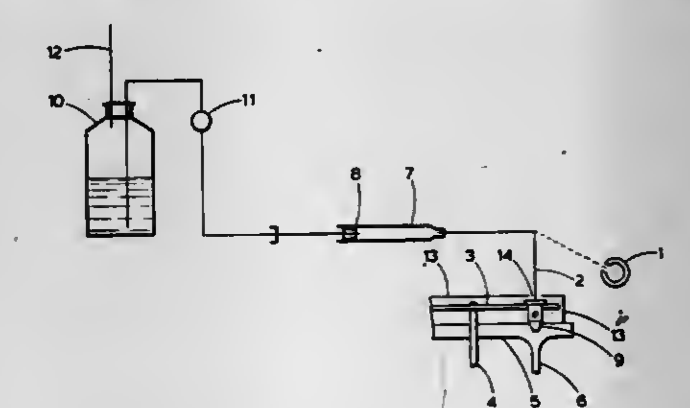

1. An automatic liquid sample supply apparatus for sequentially supplying liquid samples to an analytical instrument comprising a plurality of sample containers carried on a turntable, a delivery tube movable between a first position within a container on the turntable and a second position at a sample input of the instrument, means for aspirating a predetermined volume of a sample from a sample container into the tube when in the first position, means for expelling the sample into the instrument when in the second position, and means for discharging a flushing liquid through the delivery tube when in the first position and the turntable is indexed so that the delivery tube enters a flushing discharge container, characterised in that the flushing discharge container is carried by the turntable and is provided with an overflow aperture above the delivery end of the tube and below the lower surface of the turntable.

4,302,422

SYSTEM AND PROCESS FOR TOTAL GASEOUS NONMETHANE ORGANIC ANALYSIS

Yoshihiro Takahashi, San Jose, Calif., assignor to Envirotech Corporation, Menlo Park, Calif.

Filed Mar. 31, 1980, Ser. No. 135,595

Int. Cl.³ G01N ***31/06***

U.S. Cl. 422—88 **4 Claims**

1. An analyzer for determining the concentration of nonmethane organic chemicals in a gaseous sample comprising:

means for analyzing a gaseous sample;

first column means for initially receiving the gaseous sample to be analyzed and to reversibly retain at least any methanol, acetone and benzene while permitting at least methane and carbon dioxide to pass through;

second column means downstream of the first column means for thereafter receiving the treated gaseous sample from said first column means and to irreversibly retain any carbon dioxide while permitting at least methane to pass through;

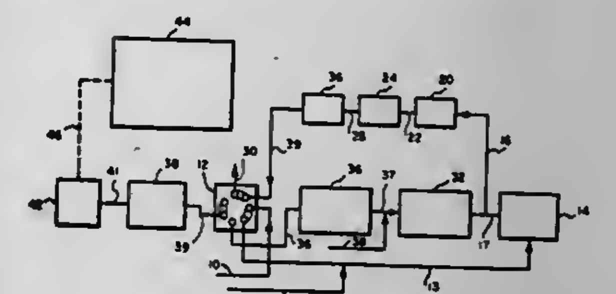

third column means coupled downstream of the second column means for thereafter receiving the treated gaseous sample from said second column means and to reversibly retain at least any ethylene and ethane while permitting at least methane to pass through;

flushing means coupled to said column means to flush the reversibly retained chemicals from said first, second and third column means; and

means for coupling said analyzing means to receive the chemicals flushed by said flushing means so as to enable the analyzing means to determine the concentration of organic chemicals in the received chemicals.

4,302,423

APPARATUS AND METHOD FOR PRODUCING CARBON BLACK

Paul J. Cheng, and King L. Mills, both of Bartlesville, Okla., assignors to Phillips Petroleum Company, Bartlesville, Okla.

Division of Ser. No. 897,883, Apr. 19, 1978, Pat. No. 4,247,530. This application Aug. 28, 1980, Ser. No. 182,186

Int. Cl.³ C01B ***31/02;*** **C09C** ***1/48***

U.S. Cl. 422—111 **7 Claims**

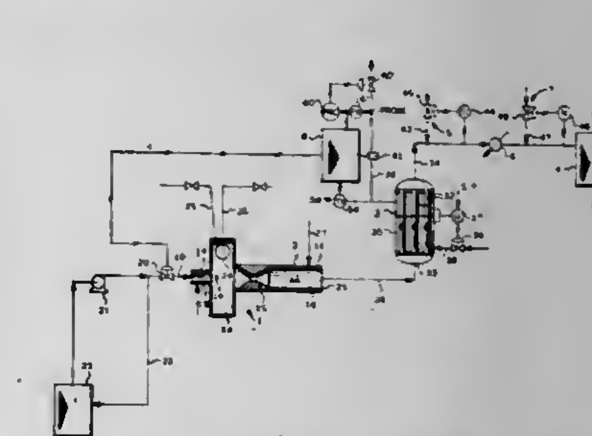

1. An apparatus for producing carbon black comprising:

a reactor defining a chamber including a combustion compartment, a reaction compartment and a quench compartment;

first inlet means opening into said chamber and operable for introducing fed hydrocarbon into said chamber;

second inlet means opening into said combustion compartment and operable for introducing combustion gases into said combustion compartment;

third inlet means opening into said quench compartment operable for introducing quench fluid into said quench compartment;

indirect heat exchange means connected in flow communi-

cation with said chamber and operable for receiving and cooling effluent from said quench compartment of said chamber;

separator means connected to flow communication with said indirect heat exchange means for receiving effluent therefrom and operable for separating said effluent into a gas portion and a carbon black portion; and

control means including temperature sensing means operably associated with said indirect heat exchange means for producing a signal representative of the rate of heat transfer from the effluent in said indirect heat exchange means, said control means being operably associated with said first inlet means for intervallicly terminating introduction of feed hydrocarbon into the chamber in response to said heat transfer rate being below a predetermined level indicating a relatively low level of heat transfer in the indirect heat exchange means and restarting the flow of feed hydrocarbon when the heat transfer rate once again reaches said predetermined level.

4,302,424
ISOTOPE SEPARATION

Tetsuya Miyake, Suginami; Norito Ogawa, Yokohama; Kohji Inada, Yokohama, and Kunihiko Takeda, Yokohama, all of Japan, assignors to Asahi Kasei Kogyo Kabushiki Kaisha, Osaka, Japan

Division of Ser. No. 941,505, Sep. 11, 1978, Pat. No. 4,280,984. This application Jul. 11, 1980, Ser. No. 167,495
Claims priority, application Japan, Sep. 14, 1977, 52-109858
Int. Cl.³ B01J *49/00;* **B01D** *59/30*
U.S. Cl. 422—159 **7 Claims**

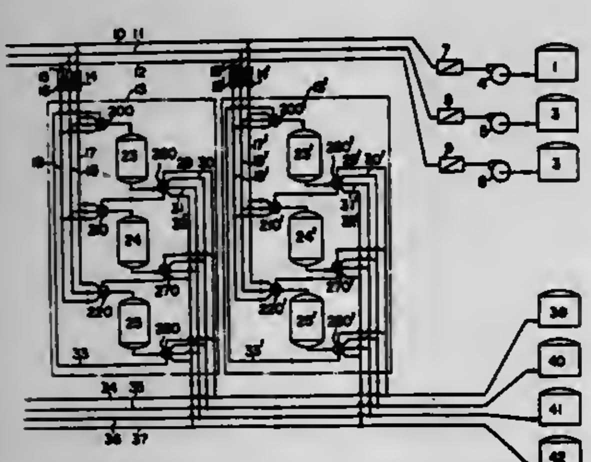

1. An apparatus for separating isotopes comprising a plurality of separation units assembled in parallel, each separation unit comprising at least two adsorbent-packed columns in series, valve means for repeatedly circulating an isotope mixture solution through said separation unit, at least one common liquid-supply pipe connected to each separation unit through a liquid flow regulator, and at least one common liquid-discharge pipe connected to each separation unit.

4,302,425
APPARATUS AND PROCESS FOR FLUE GAS DESULPHURIZATION

Ronald R. Gamel, 8401 N. Atlantic Ave., Cape Canaveral, Fla. 32920

Filed Jan. 2, 1980, Ser. No. 109,143
Int. Cl.³ C01B *17/48, 17/04;* **B01J** *8/02*
U.S. Cl. 422—161 **7 Claims**

1. An apparatus for converting SO_x components in stack gases, which also include O_2 and water vapor, into H_2SO_4 which may subsequently be removed, said apparatus comprising in combination:

means defining a breech section;

means defining a stack connected to and in flow communication with said breech section for passing the stack gases therethrough;

means for heating the stack gases to least 1000° F. in a reaction area generally defined within said breech section and said stack;

source means for defining a source of hydrogen;

injection means operatively coupled to said source means for injecting H_2 into said reaction area within said breech section for converting at least some of the SO_x components into S and H_2S;

fluid source means for defining a source of H_2O;

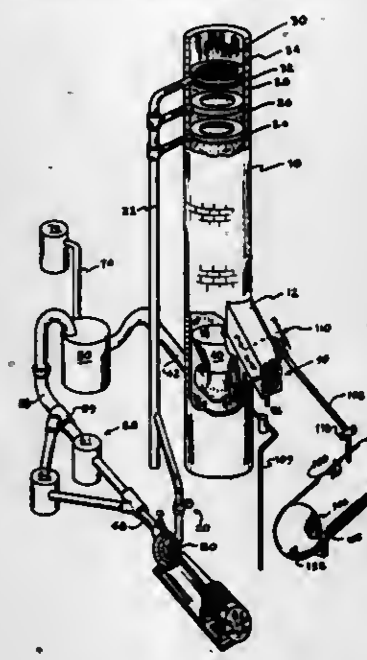

means operatively coupled to said fluid source means and located within an upper section of said stack for spraying H_2O downwardly through said reaction area of said stack for precipitating particulate matter from the stack gases and for converting at least some of the H_2S components into H_2SO_4;

liquid collection means spaced below said reaction area of said stack for absorbing any H_2SO_4 and the particulate matter suspended in the H_2O; and

lime rock filtration means spaced above said reaction area of said stack for absorbing any H_2S and H_2SO_4 components of the stack gases and for trapping any of the remaining particulate matter therein.

4,302,426
THERMAL REGENERATION OUTLET BY-PASS SYSTEM

Edward H. Benedick, Morristown, N.J., assignor to Regenerative Environmental Equipment Co., Inc., Morris Plains, N.J.

Filed Jul. 9, 1979, Ser. No. 55,908
Int. Cl.³ F01N *3/10*
U.S. Cl. 422—173 **14 Claims**

1. In a thermal regeneration system for processing an industrial exhaust gas flow or the like, the combination comprising:

(a) a combustion chamber in which a high temperature range is maintained,

(b) at least three separate stationary heat-exchange sections contiguous with and in communication with said chamber, each bed containing randomly disposed packing comprised of a plurality of solid heat exchange elements, said beds being bounded by vertical non-parallel walls,

(c) a plurality of stationary inlet means, each being coupled to one of said beds, for conducting said gas flow to said bed for passage through it into said chamber,

(d) a plurality of stationary outlet means, each coupled to one of said beds, for conducting said gas flow away from said bed after the gas flow has passed outwardly through said bed from said chamber,

(e) fueled heating means within said chamber for continuously producing or maintaining said high temperature range, said temperature range being considerably higher than the temperature range of the gas flow as it first is applied to the apparatus and sufficiently high to cause continuous thermal oxidation of said gas flow,

(f) means for sensing a predetermined temperature within said combustion chamber, and

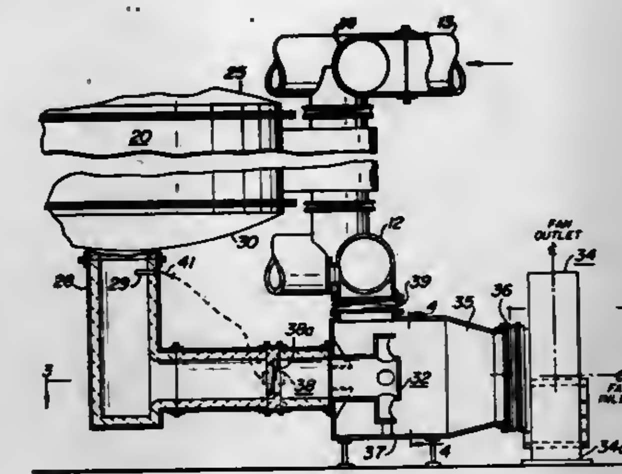

(g) means coupled to said chamber and to said sensing means for extracting a predetermined portion of the gases direct from said chamber when said sensing means detects said predetermined temperature, and

(h) means coupled to said extracting means for mixing said extracted portion of gases with other gases from said exhaust which have been cooled by contact with at least one of said heat-exchange sections.

4,302,427
RECOVERY OF URANIUM FROM WET-PROCESS PHOSPHORIC ACID

William W. Berry, Lakeland, Fla., and Angus V. Henrickson, Golden, Colo., assignors to International Minerals & Chemical Corporation, Northbrook, Ill.

Filed Mar. 19, 1979, Ser. No. 22,079
Int. Cl.³ C01G *43/01;* **B01D** *11/04*
U.S. Cl. 423—10 **14 Claims**

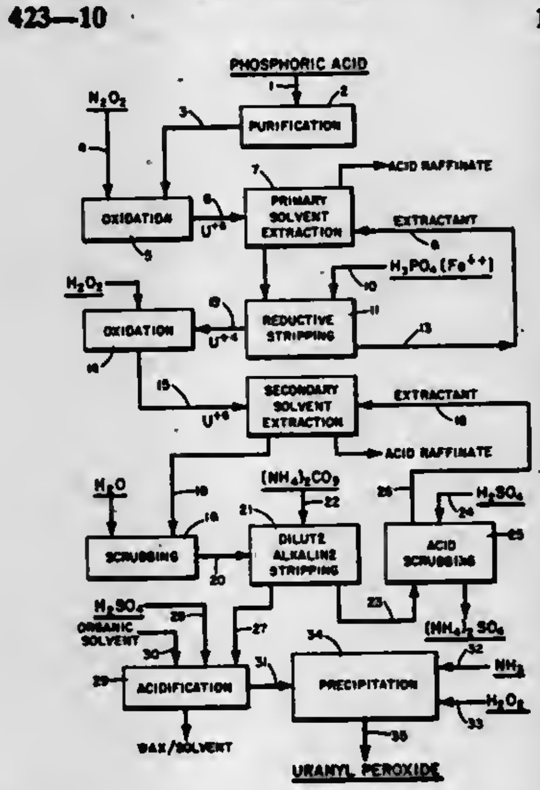

1. A process for recovering uranium from wet-process phosphoric acid containing hexavalent uranium values comprising:

(a) contacting said acid with an organic extractant comprising a mixture of di(2-ethylhexyl) phosphoric acid and trioctylphosphine oxide in a phosphoric acidimmiscible organic solvent and separating the resulting uranium loaded primary extractant from the lean acid;

(b) contacting said uranium loaded primary extractant with a phosphoric acid strip solution containing dissolved Fe^{++} and separating the resulting U^{+4} loaded acid strip solution from said organic extractant;

(c) contacting said U^{+4} loaded acid strip solution with an oxidizing agent to convert the uranium values to the U^{+6} form;

(d) contacting the resulting U^{+6} loaded acid strip solution with a second portion of said organic extractant and separating the resulting U^{+6} loaded secondary extractant from the lean acid strip solution;

(e) contacting said U^{+6} loaded secondary extractant with a dilute aqueous ammonium carbonate solution and separating the resulting aqueous ammonium uranyl tricarbonate solution from said organic extractant;

(f) separating any iron or other impurity-containing precipitates that may form in step (e) from said aqueous ammonium uranyl tricarbonate solution;

(g) contacting the aqueous ammonium uranyl tricarbonate solution with a water-immiscible organic solvent for the acidified form di(2-ethylhexyl) phosphoric acid either prior to or during the acidification of step (h);

(h) contacting said aqueous ammonium uranyl tricarbonate solution with an acid in the presence of said organic solvent to form an aqueous acidic solution having a pH of about 2 and removing from said aqueous acidic solution the CO_2 formed as the carbonate ions are destroyed;

(i) separating the resulting organic solution containing dissolved DEPA from said aqueous acidic solution; and

(j) contacting said aqueous acidic solution with hydrogen peroxide at a pH in the range of about 3.5 to 4.5 to precipitate uranyl peroxide compound.

4,302,428
YELLOWCAKE PROCESSING IN URANIUM RECOVERY

James M. Paul, DeSoto, Tex., assignor to Mobil Oil Corporation, New York, N.Y.

Filed Nov. 16, 1979, Ser. No. 95,188
Int. Cl.³ C01G *43/01*
U.S. Cl. 423—16 **6 Claims**

1. In the recovery of uranium from a rich eluate wherein said eluate is contacted by hydrogen peroxide in order to precipitate said uranium as a uranium peroxide yellowcake, the improvement comprising reacting said yellowcake while in an aqueous slurry with a reducing agent to produce uranium trioxide.

4,302,429
PROCESS FOR SOLUTION MINING OF URANIUM ORES

Bernard C. Lawes, and John C. Watts, both of Wilmington, Del., assignors to E. I. Du Pont de Nemours and Company, Wilmington, Del.

Continuation-in-part of Ser. No. 739,968, Nov. 8, 1976, abandoned. This application Feb. 26, 1979, Ser. No. 15,207
Int. Cl.³ C01G *43/00;* **E21B** *43/28*
U.S. Cl. 423—17 **4 Claims**

1. In a process for the solution mining of a uranium ore formation where an aqueous alkaline carbonate leaching solution having a pH of 7–10 and containing hydrogen peroxide as oxidant is passed through the ore formation to dissolve uranium from the formation therein and the solution is withdrawn from the ore formation enriched in uranium, the improvement comprising: passing the leaching solution through the ore formation, said leaching solution containing an alkylidene-1,1-diphosphonic acid having the structural formula:

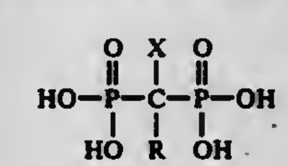

where

X is —OH or —H, and

R is an alkyl group of 1 to 5 carbon atoms

wherein the diphosphonic acid is present at a concentration of at least 1 part per million by weight based on the weight of the leaching solution to stabilize the hydrogen peroxide.

4,302,430

PROCESS FOR RELEASING AMMONIA BOUND IN COAL WATER

Heinrich Weber, and Dieter Laufhütte, both of Recklinghausen, Fed. Rep. of Germany, assignors to Firma Carl Still GmbH & Co. KG, Fed. Rep. of Germany

Filed Apr. 28, 1980, Ser. No. 144,038

Claims priority, application Fed. Rep. of Germany, May 3, 1979, 2917780

Int. Cl.³ C01C *1/10*

U.S. Cl. 423—234 5 Claims

1. A process for releasing ammonia bound in coal water containing the ammonia in the form of salts of strong acids in an ammonia-hydrogen sulfide scrubbing process of a combined pre-desulfurization and ammonia removal plant having a hydrogen scrubber and an ammonia scrubber, the scrubbing process being of the type wherein raw coke oven gas containing ammonia and hydrogen sulfide is passed into the hydrogen scrubber, scrubbed with ammonical water received in the hydrogen scrubber from the ammonia scrubber to form a prepurified gas, and in which the prepurified gas is then passed into the ammonia scrubber and scrubbed with water to form the ammonical water to be used in the hydrogen scrubber, the improvement wherein the water passed in the ammonia scrubber is the coal water, and further comprising the steps of then passing the coal water into the hydrogen sulfide scrubber, scrubbing the prepurified gas in the ammonia scrubber with an aqueous alkali solution after the prepurified gas is scrubbed with the coal water to form an alkali solution enriched with acid components, and passing the enriched alkali solution into the hydrogen sulfide scrubber to liberate the ammonia bound in the coal water.

4,302,431

PROCESS FOR CONTROLLING NITROGEN OXIDES IN EXHAUST GASES AND APPARATUS THEREFOR

Masumi Atsukawa; Kazuhiro Matsumoto; Toru Seto; Toshikuni Sera, and Naohiko Ukawa, all of Hiroshima, Japan, assignors to Mitsubishi Jukogyo Kabushiki Kaisha, Tokyo, Japan

Division of Ser. No. 964,893, Nov. 30, 1978, abandoned. This application May 21, 1980, Ser. No. 151,814

Claims priority, application Japan, Dec. 2, 1977, 52-144012

Int. Cl.³ B01D *53/36*

U.S. Cl. 423—239 2 Claims

1. In a process for controlling oxides of nitrogen in exhaust gases from combustion equipment by decomposing the oxides with oxygen and ammonia at temperatures from 700° to 1300°, the improvement which comprises arranging a catalyst assembly downstream of the contact point between the exhaust gas and ammonia, with the catalytic surfaces of the component units of the assembly substantially in parallel to the direction of gas flow, in a region where the temperature of the gas after the decomposing treatment is from 300° to 500° C., and causing said gas after said decomposing treatment to pass through the catalyst assembly, thereby decomposing residual oxides of nitrogen and ammonia in said gas to innocous substances.

4,302,432

PREPARATION OF HYDROGEN IODIDE, LITHIUM IODIDE AND METHYL IODIDE

Stanley W. Polichnowski, Kingsport, Tenn., assignor to Eastman Kodak Company, Rochester, N.Y.

Filed Nov. 21, 1980, Ser. No. 209,351

Int. Cl.³ C01B *7/13;* C01D *3/12;* C07C *17/22*

U.S. Cl. 423—487 4 Claims

1. Process for the preparation of hydrogen iodide which comprises reacting under anhydrous conditions hydrogen and iodine at a temperature of about 80° to 200° C. and a hydrogen pressure of at least 15 psig in a non-alcoholic, organic solvent in the presence of a homogeneous rhodium catalyst, the rhodium catalyst being the result of a rhodium compound contacting an iodine compound in the presence of carbon monoxide.

4,302,433

PROCESS FOR PRODUCING ANHYDROUS MAGNESIUM CHLORIDE AND SUITABLE APPARATUS

Richard B. Stein, San Donato Milanese, Italy, assignor to Anic S.p.A., Palermo, Italy

Continuation of Ser. No. 519,841, Oct. 31, 1974, abandoned. This application May 2, 1977, Ser. No. 792,911

Claims priority, application Italy, Oct. 31, 1973, 30784 A/73

Int. Cl.³ C01F *5/32*

U.S. Cl. 423—498 4 Claims

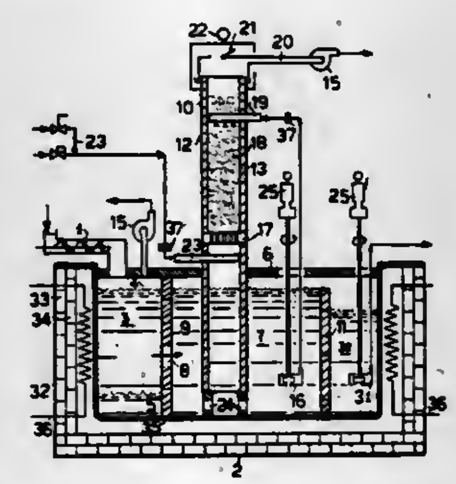

1. The process of preparing a substantially anhydrous magnesium chloride from a hydrated magnesium chloride feed material, said process comprising:

(a) drying said feed material;

(b) feeding said dried material to a melting chamber in a heated furnace to form a liquid containing molten $MgCl_2$;

(c) thereafter causing the liquid containing molten $MgCl_2$ to flow through a passage in a wall separating said melting chamber from a chlorination chamber, to said chlorination chamber;

(d) continuously feeding molten $MgCl_2$ from said chlorination chamber, to a chlorination tower in said furnace containing lumps of carbonaceous material, so that it flows downwardly through said bed;

(e) introducing a gaseous stream of substantially equal parts of chlorine and air into the lower part of said chlorination tower so that it flows upwardly through said bed of carbonaceous material countercurrently to said molten $MgCl_2$; and

(f) withdrawing from the furnace substantially anhydrous $MgCl_2$.

4,302,434

PROCESS FOR PRODUCING HYDROGEN AND SULPHUR FROM HYDROGEN SULPHIDE

Lars Hellmer, Cologne; Gerhard Keunecke, Geyen; Rainer Lell, Kerpen; Ghazi R. Al-Muddarris, Cologne; Reinhard Pachaly, Kerpen; Adolf Stauffer, Pulheim, and V. Rao Vangala, Cologne, all of Fed. Rep. of Germany, assignors to Davy International Aktiengesellschaft, Frankfurt, Fed. Rep. of Germany

Filed Apr. 11, 1980, Ser. No. 139,593

Claims priority, application Fed. Rep. of Germany, Apr. 14, 1979, 2915210

Int. Cl.³ C01B *17/04, 3/04*

U.S. Cl. 423—573 G 14 Claims

1. A process for the production of hydrogen and sulphur by thermal cracking, said process comprising:

(A) conducting a hydrogen sulphide-containing feed gas through a cracking zone maintained at a temperature of from about 850° C. to 1600° C., to thereby effect cracking of the hydrogen sulphide in said feed gas;

(B) cooling the cracked gas to temperatures of from about 110° to 150° C. to thereby condense elemental sulphur formed by the cracking;

(C) separating said elemental sulfur condensed by said cooling from said cracked gas;

(D) heating the cracked gas, after said separation of the condensed sulfur, to temperatures in the range of from 100° to 400° C.;

(E) conducting the heated cracked gas over a hydrogenation catalyst;

(F) washing the cracked gas with a basic and/or with a physically acting washing liquid in order to separate uncracked and reconverted hydrogen sulfide therefrom;

(G) desorbing the separated hydrogen sulfide from said washing liquid and recycling the desorbed hydrogen sulfide to the cracking zone; and

(H) drawing off the residual gas after separation of said elemental sulfur and said uncracked and reconverted hydrogen sulfide as hydrogen-rich gas.

4,302,435

HYDROGENATION OF A DIARYLKETONE TO A DIARYLMETHANOL

Lawrence W. Gosser, Wilmington, Del., assignor to E. I. Du Pont de Nemours and Company, Wilmington, Del.

Filed Sep. 22, 1980, Ser. No. 189,059

Int. Cl.³ C07C *29/136;* C01B *15/026*

U.S. Cl. 423—591 14 Claims

1. Process comprising contacting and reacting a diarylketone of the formula RCOR′, wherein each of R and R′ is aryl, the same or different, and hydrogen over at least a catalytic amount of lead-poisoned palladium catalyst at a hydrogen gage pressure in the range from about 150 kPa to about 15,000 kPa, at a temperature in the range from about 50° C. to about 200° C., to produce diarylmethanol of the formula RCHOHR′, wherein R and R′ are defined as above.

9. In an integrated cyclic process for preparing hydrogen peroxide by oxidizing a diarylmethanol and thereafter hydrogenating the resultant diarylketone back to the diarylmethanol, the improvement characterized is that the process includes the steps:

(a) diarylmethanol having 13 to 25 carbon atoms and of the formula RCHOHR′, wherein each of R and R′ is aryl, the same or different, is contacted and reacted, in the liquid state, at about 130°-260° C., with gaseous oxygen to produce hydrogen peroxide and diarylketone of the formula RCOR′, wherein R and R′ are as defined above; and

(b) diarylketone having 13 to 25 carbon atoms and of the formula RCOR′, wherein each of R and R′ is aryl, the same or different, is contacted and reacted with hydrogen over at least a catalytic amount of lead-poisoned palladium catalyst at a hydrogen gauge pressure in the range from about 150 kPa to about 15,000 kPa, a temperature in the range from about 50° C. to about 200° C., to produce diarylmethanol of the formula RCHOHR′, wherein R and R′ are as defined above,

provided, however, R and R′, respectively, are the same in both steps.

4,302,436

METHOD OF REGENERATING DISPROPORTIONATED HYDRIDES

Bruce E. Sirovich, Naperville, and Irwin Ginsburgh, Morton Grove, both of Ill., assignors to Standard Oil Company (Indiana), Chicago, Ill.

Continuation-in-part of Ser. No. 973,128, Dec. 26, 1978, abandoned. This application Nov. 19, 1979, Ser. No. 95,591

Int. Cl.³ C01B *6/00, 6/02, 6/24*

U.S. Cl. 423—644 9 Claims

1. An in-situ method of regenerating a disproportionated hydride, wherein said hydride comprises metals, metal alloys or intermetallic compounds, which is being used in a process application comprising

(a) maintaining at least one more hydride bed than the number normally required for operations of said process, such that at least one disproportionated hydride bed is reproportionated in a regeneration zone while at least one of the remaining beds remains in use in said process;

(b) removing snbstantially all hydrogen from said disproportionated hydride, maintaining said hydride in a substantially hydrogen-free environment at a regeneration temperature sufficient to effectuate desired restoration of the hydride's pressure-composition characteristics but below the approximate annealing temperature of the hydride, and thereafter exposing the hydride to hydrogen to promote absorption; and

(c) periodically interchanging the roles of the beds such that at least one bed reproportionated in step (b) is introduced into the process and at least one disproportionated bed in process use undergoes reproportionation in the regeneration zone of step (b).

4,302,437

MITOGEN STIMULATED LYMPHOCYTE TRANSFORMATION

Victor Herbert, 88 Walworth Ave., Scarsdale, N.Y. 10583

Filed Aug. 30, 1979, Ser. No. 71,357

Int. Cl.³ G01N *33/60;* G01T *1/00*

U.S. Cl. 424—1 30 Claims

1. In a process for determining vitamin deficiency by a deoxyuridine suppression test wherein a blood sample is preincubated with a mitogen to stimulate transformation of blood lymphocytes to produce DNA, followed by incubation with deoxyuridine and tracer, the improvement comprising:

employing a whole blood sample of a quantity of no greater than 0.5 ml, and mitogen in an amount to stimulate transformation of lymphocytes in the whole blood sample and provide a mitogen to whole blood sample ratio which prevents agglutination of blood cells.

4,302,438

ANTIGEN, ANTISERUM AND IMMUNOASSAY FOR THEOPHYLLINE

Karl Zech, Konstanz, Fed. Rep. of Germany, assignor to Byk Gulden Lomberg Chemische Fabrik GmbH, Konstanz, Fed. Rep. of Germany

Filed Jan. 8, 1980, Ser. No. 110,441

Claims priority, application Fed. Rep. of Germany, Jan. 13, 1979, 2901218

Int. Cl.³ G01N *33/58, 33/60;* C07G *7/00;* C07D *473/00*

U.S. Cl. 424—1 40 Claims

1. An antigen in the structure of which a haptene of the formula

$$T—(CH_2)_n—COOH$$

wherein

T is theophylline-(7) and

n is an integer from 2 to 4, inclusive,

is covalently bonded via the carbonyl group to an immunogenic carrier.

4,302,439

METHOD OF DISCLOSING DENTAL PLAQUE WITH D AND C RED 33

Stephen L. Selwyn, 18 Franklin Close, Whetstone, London, N2O 9QG, England

Continuation of Ser. No. 37,757, May 10, 1979, abandoned, which is a continuation of Ser. No. 783,444, Mar. 31, 1977, abandoned. This application Jul. 16, 1980, Ser. No. 169,489

Claims priority, application United Kingdom, Apr. 7, 1976, 14189/76

Int. Cl.[3] A61K *6/00;* **G01N** *1/30, 33/48*

U.S. Cl. 424—7 **8 Claims**

1. A method for disclosing dental plaque which comprises administering a plaque-disclosing amount of the dye D and C Red 33, having the formula

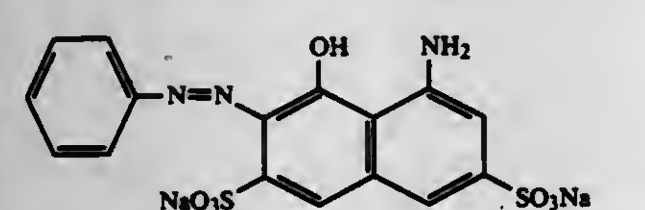

to an individual to stain any dental plaque on the teeth of said individual.

4,302,440

EASILY-SWALLOWED, POWDER-FREE AND GASTRIC-DISINTEGRABLE ASPIRIN TABLET THINLY-COATED WITH HYDROXYPROPYL METHYLCELLULOSE AND AQUEOUS SPRAY-COATING PREPARATION THEREOF

Phillip M. John, East Greenbush; Raymond J. Belanger, Rensselaer, and Myron Paikoff, Colonie, all of N.Y., assignors to Sterling Drug Inc., New York, N.Y.

Filed Jul. 31, 1980, Ser. No. 174,249

Int. Cl.[3] A61K *9/36*

U.S. Cl. 424—35 **24 Claims**

1. The method for preparing an easily-swallowed, powder-free, gastric-disintegrable and thinly-coated aspirin tablet which does not have the characteristic aspirin taste and does not produce the esophageal discomfort of an uncoated aspirin tablet and which does not disintegrate in the stomach materially slower than the uncoated aspirin tablet, which comprises aqueous spray-coating hydroxypropyl methylcellulose onto all exterior surfaces of an aspirin tablet, the amount of hydroxypropyl methylcellulose being between 0.5 and 2.0 parts by weight per 100 parts by weight of the aspirin tablet.

4,302,441

SOLID ORAL PREPARATIONS OF UREA HYDROGEN PEROXIDE WITHOUT GLYCEROL

Hans R. Mühlemann, Beustweg 8, Zurich, Switzerland; Allen R. Firestone, and Thomas Imfeld, both of Zurich, Switzerland, assignors to Hans R. Mühlemann, Zurich, Switzerland

Filed Apr. 11, 1980, Ser. No. 139,243

Claims priority, application United Kingdom, Apr. 19, 1979, 13619/79

Int. Cl.[3] A61K *7/20, 9/68, 31/17, 33/40*

U.S. Cl. 424—48 **16 Claims**

1. A solid orally administrable composition in the form of lozenge, tablet or chewing gum for neutralizing acid in dental plaque which composition comprises as active ingredient urea hydrogen peroxide in an amount effective to neutralize said acid and up to 15% by weight and in the absence of glycerol together with a sweetner selected from the group consisting of mannitol, sorbitol xylitol and saccharin and a carrier selected from the group consisting of soluble cellulose ethers and carbohydrate gums.

4,302,442

NAIL ENAMELS

Robert Socci, Cedar Grove, N.J.; Anthony Gunderman, Winston Salem, N.C.; Eustace Fotis, Mahwah, N.J., and Bernard Kabacoff, Norwalk, Conn., assignors to USV Pharmaceutical Corporation, Tuckahoe, N.Y.

Continuation-in-part of Ser. No. 79,949, Sep. 28, 1979, abandoned. This application Dec. 18, 1980, Ser. No. 217,623

Int. Cl.[3] A61K *7/04*

U.S. Cl. 424—61 **12 Claims**

1. In a method for substantially preventing the migration of suspended materials in nail enamels, the improvement comprising the addition of from about 0.10 to 5.0% by weight of a hydroxylated lecithin to said nail enamels.

4,302,443

NON-IRRITATING ANTIPERSPIRANT

Maison G. deNavarre, Orlando, and Timothy Meadows, Melbourne, both of Fla., assignors to Terry Corporation, Indian Harbour Beach, Fla.

Filed Feb. 21, 1980, Ser. No. 123,378

Int. Cl.[3] A61K *7/38, 35/78*

U.S. Cl. 424—68 **9 Claims**

1. A non-irritating antiperspirant composition comprising:

a 50% solution of aluminum chlorohydroxide in an amount from about 75 to about 95% by weight; and

an extract of the aloe vera plant in an amount from about 5 to 25% by weight.

4,302,444

VACCINES FOR IMMUNIZING EGG-LAYING BIRDS AGAINST EGG DROP DISEASE, PREPARATION OF SAID VACCINES, AND METHOD OF USE OF SAID VACCINES

William Baxendale, Houghton, Great Britain, assignor to Akzo N.V., Netherlands

Continuation-in-part of Ser. No. 880,152, Feb. 22, 1978, abandoned. This application Aug. 27, 1979, Ser. No. 69,852

Claims priority, application United Kingdom, Mar. 4, 1977, 9322/77

Int. Cl.[3] A61K *39/235*

U.S. Cl. 424—89 **13 Claims**

1. A process for the preparation of a live, unattenuated vaccine that protects egg-laying birds against the Egg Drop disease comprising

growing an EDS 76 virus selected from the group consisting of virus EDS 76 (VLO 10110/AV1) on cell tissue culture and

harvesting the infected culture material selected from the group consisting of tissue culture fluids, the cells, and mixtures thereof.

4,302,445

METHOD FOR CONCENTRATING AND PURIFYING ANTIHEMOPHILIC FACTOR OR FACTOR VIII

Jean F. Pla, Ste Foy les Lyons, and Jacques C. Liautaud, Limonest, both of France, assignors to Institut Merieux, Lyons, France

Filed Jan. 18, 1980, Ser. No. 113,283

Int. Cl.[3] A61K *35/14*

U.S. Cl. 424—101 **9 Claims**

1. In a method of concentrating and purifying Factor VIII comprising the steps of (1) collecting cryoprecipitate from frozen human plasma, (2) extracting the cryoprecipitate, (3) removing prothrombin complex, (4) precipitating fibrinogen and thereafter (5) ultra-filtering the remaining solution to form a purified Factor VIII concentrate,

the improvement consisting of cold washing the cryoprecipitate before extraction step (2) with an aqueous saline solution.

4,302,446

PHARMACEUTICAL COMPOSITIONS

Murray A. Kaplan, Syracuse, and Alphonse P. Granatek, Baldwinsville, both of N.Y., assignors to Bristol-Myers Company, New York, N.Y.

Filed Oct. 2, 1979, Ser. No. 81,301

Int. Cl.[3] A01N *11/00;* **C01F** *15/00*

U.S. Cl. 424—131 **15 Claims**

1. Stable, microcrystalline cisplatin having a particle size distribution of at least about 80% in the range of 0 to 5 micrometers, less than about 20% in the range of 5 to 20 micrometers and essentially no particles larger than 20 micrometers; the crystalline form of said microcrystalline cisplatin being different from that of lyophilized cisplatin as demonstrable by x-ray powder diffraction patterns; and said microcrystalline cisplatin being completely soluble in water within about three minutes at a concentration of 1 mg. per ml.

4,302,447

PHARMACEUTICAL AND DIETARY COMPOSITION

David F. Horrobin, Montreal, Canada, assignor to Efamol Limited, London, England

Continuation-in-part of Ser. No. 4,924, Jan. 19, 1979. This application Oct. 30, 1979, Ser. No. 89,293

Claims priority, application United Kingdom, Jan. 23, 1978, 2642/78; Feb. 7, 1978, 4921/78; Apr. 19, 1978, 15481/78; Aug. 17, 1978, 33682/78; Oct. 24, 1978, 41761/78

The portion of the term of this patent subsequent to Jun. 16, 1998, has been disclaimed.

Int. Cl.[3] A61K *33/30, 31/54, 31/43, 31/20*

U.S. Cl. 424—145 **14 Claims**

1. A pharmaceutical or dietary composition for administration to influence the balance of 1-series and 2-series PG's in the body in favor of 1-series PG's, said composition comprising:

(a) γ-linolenic acid or physiologically functional derivative thereof and/or dihomo-γ-linolenic acid or physiologically functional derivative thereof present in an amount of from about 0.05 to 10 grams calculated as linolenic acid, and

(b) form about 0.5 to 3 grams of a β-lactam antiobiotic, alone or in an acceptable pharmaceutical or dietary vehicle.

4,302,448

SECRETIN PREPARATIONS WITH INTENSIFIED AND PROTRACTED ACTION, PROCESS FOR THEIR MANUFACTURE, THEIR USE AS WELL AS DIHYDROXYBENZOYL-L-TYROSINE

Martin Bickel; Rolf Geiger, both of Frankfurt am Main; Richard Leeb, Kelkheim, and Walter Petri, Niedernhausen, all of Fed. Rep. of Germany, assignors to Hoechst Aktiengesellschaft, Frankfurt am Main, Fed. Rep. of Germany

Filed Jun. 11, 1980, Ser. No. 158,595

Claims priority, application Fed. Rep. of Germany, Jun. 13, 1979, 2923878; Apr. 3, 1980, 3013105

Int. Cl.[3] A61K *37/00*

U.S. Cl. 424—177 **9 Claims**

1. A secretin preparation having an intensified and protracted action, said preparation comprising secretin and a phenolic depot body having a molecular weight up to about 2000 and selected from the group consisting of compounds having one or more benzene nuclei and at least one phenolic OH group and compounds of hydroxynaphthalene, hydroxyindole, and hydroxyquinoline.

4,302,449

CARMINOMYCIN ANALOGUE

Hassan S. El Khadem, Houghton, and David L. Swartz, Midland, both of Mich., assignors to Board of Control of Michigan Technological University, Houghton, Mich.

Filed Sep. 2, 1980, Ser. No. 183,197

Int. Cl.[3] A61K *31/70;* **C07H** *15/24*

U.S. Cl. 424—180 **2 Claims**

1. A compound having the formula:

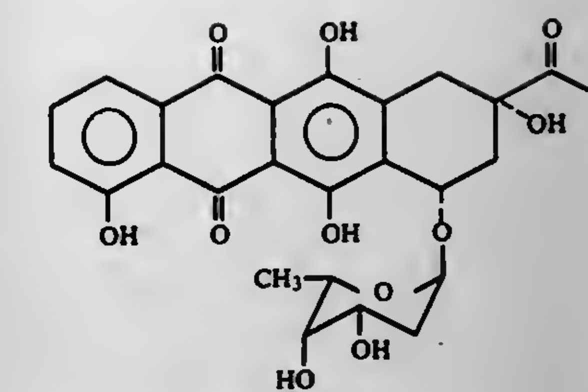

2. A method of inhibiting the growth of L 1210 leukemia tumors comprising administering to an experimental animal host afflicted with said tumor a composition including an amount of a compound according to claim 1 sufficient to inhibit the growth of said tumor and a pharmaceutically acceptable carrier.

4,302,450

POLYETHER IONOPHORES AS ANTIOBESITY AND HYPOTRIGLYCERIDEMIC AGENTS

Karen Comai, Nutley; Ann Sullivan, and John Westley, both of Cedar Grove, all of N.J., assignors to Hoffmann-La Roche Inc., Nutley, N.J.

Division of Ser. No. 3,158, Jan. 15, 1979, Pat. No. 4,218,443. This application Feb. 22, 1980, Ser. No. 123,537

Int. Cl.[3] A61K *31/35, 31/40, 31/60, 31/71*

U.S. Cl. 424—181 **12 Claims**

1. A method of treating high triglyceride levels in warm blooded animals in need of such treatment which comprises orally administering to such warm blooded animals from 1 mg/kg/day to 300 mg/kg/day of polyether compound with ionophore activity sufficient to inhibit fatty acid synthesis or the activity of pancreatic lipase.

4,302,451

PESTICIDAL PHOSPHORUS SULFENAMIDES

Caleb W. Holyoke, Jr., Newark, Del., assignor to E. I. Du Pont de Nemours and Company, Wilmington, Del.

Filed May 5, 1980, Ser. No. 146,416

Int. Cl.[3] C07F *9/24;* **A01N** *57/30, 57/32;* **C07D** *207/10*

U.S. Cl. 424—211 **48 Claims**

1. A compound of the formula

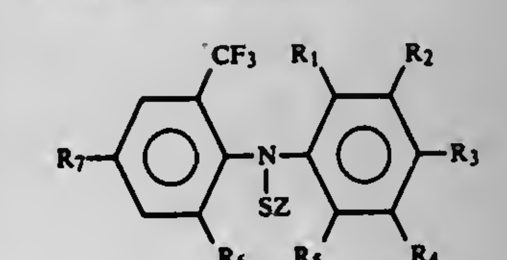

(I)

wherein

R_1, R_3 and R_4 are independently H, F, Cl, Br, NO_2, CF_3, $OCHF_2$, OCF_3, OCF_2CF_2H or $S(O)_kR_9$; or R_3 and R_4 may be taken together to form $—OCF_2O—$ or $—OCF_2OCF_2—$;

R_2 is H, F, Cl, Br, NO_2, CF_3 or $S(O)_kR_9$;

R_5 is H, Cl, F, Br or NO_2;

R_6 is H, NO_2 or CF_3;

R_7 is NO_2 or CF_3;

k is 0, 1 or 2;

R_9 is C_1–C_2 alkyl optionally substituted with 2-4 Cl and/or F;

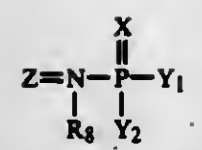

where R_8 is C_1–C_8 alkyl optionally substituted with F, Br, Cl or I, CN, OCH_3, OCH_2CH_3; phenyl or benzyl, each can be optionally substituted with Cl, F, Br, I, CH_3, OCH_3, NO_2 or CF_3;

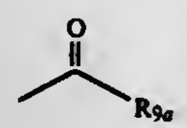

where
R_{9a} is C_1–C_4 alkyl or phenyl optionally substituted with F, Cl, Br, I, NO_2, CH_3, OCH_3 or CF_3;
X is O or S;
Y_1 or Y_2 are independently: C_1–C_4 alkyl optionally substituted with one or more F, Cl, Br or I, OCH_3, OCH_2CH_3, CN, CH_3S, CH_3CH_2S; C_2–C_4 alkenyl optionally substituted with one or more F, Cl, carboxy or carboalkoxy; benzyl which can be optionally substituted with F, Cl, Br, I, NO_2, CH_3, OCH_3 or CF_3; C_1–C_4 alkoxy optionally substituted with one to three atoms of F, Cl, Br, CH_3O, CH_3CH_2O or combinations thereof;
C_1–C_4 thioalkyl optionally substituted with one to three of the groups F, Cl, Br, I, carboxy or carboalkoxy, or combinations thereof; phenyl, phenoxy or thiophenoxy each optionally substituted with one to three of the groups F, Cl, Br, I, NO_2, CH_3, CF_3 or combinations thereof; or $NR_{10}R_{11}$ where
R_{10} is C_1–C_4 alkyl or OCH_3;
R_{11} is C_1–C_4 alkyl; and
R_{10} and R_{11} can be taken together to form

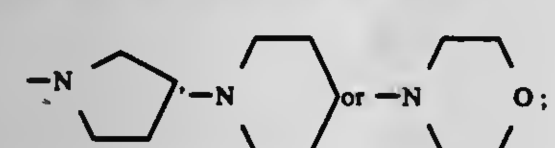

Y_1 and Y_2 can be taken together to form

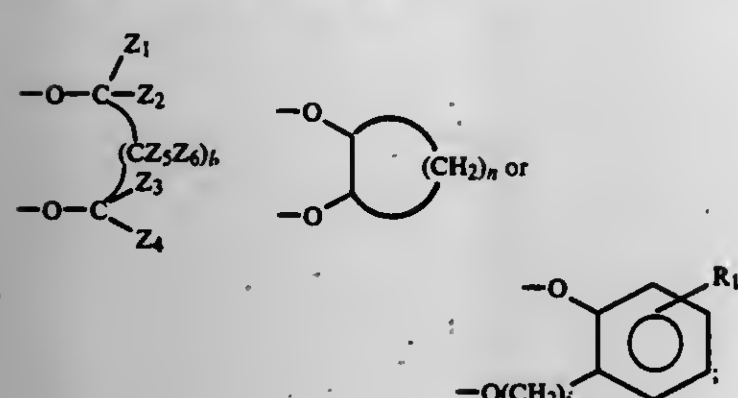

and R_{12} is H, C_1–C_4 alkyl, C_1–C_4 Alkoxy or Halogen where
Z_1, Z_2, Z_3, Z_4, Z_5 or Z_6 are independently H, CH_3 or CH_3CH_2;
n is 3 or 4;
l is 0 or 1;
provided that
(1) at least two of R_1, R_2, R_3, R_4 and R_5 are hydrogen;
(2) no more than two of the substituents R_1, R_2, R_3 and R_4 are simultaneously NO_2 or CF_3;
(3) when two NO_2 or two $S(O)_kR_9$ groups are present, they are not ortho to one another;
(4) R_6 and R_7 are not simultaneously CF_3; and
(5) further provided that when R_6 is NO_2, then
(a) R_1 is H, F or Cl when R_3 is other than H, F or Cl;
(b) when $R_1 = R_3 = R_5$, then R_1, R_3 and R_5 are either H or F; and
(c) R_5 is either H or F.
(6) when R_{10} is OCH_3, R_{11} is C_1–C_4 alkyl;
(7) only one of Y_1 and Y_2 is $NR_{10}R_{11}$;
(8) only one of R_{10} and R_{11} is phenyl or substituted phenyl.

17. A method for control of mites, insects, fungus, mite eggs or insect eggs which comprises applying to a locus to be protected a miticidally, insecticidally, fungicidally or ovicidally effective amount of a compound of claim 1.

4,302,452
USE OF DERIVATIVES OF 6α-METHYLPREDNISOLONE AS AN ANTIEMETIC
Johnny M. Pittman, Jr., Memphis, Tenn., assignor to The Upjohn Company, Kalamazoo, Mich.
Division of Ser. No. 144,000, Apr. 25, 1980, abandoned. This application Nov. 21, 1980, Ser. No. 209,078
Int. Cl.[3] A61K *31/56*
U.S. Cl. 424—243 **4 Claims**

1. A method for the prevention of chemotherapeutic-induced nausea and vomiting which comprises administering intravenously to a patient expecting chemotherapy, a formulation comprising a compound selected from the group consisting of water soluble 21-dibasic esters of 1-dehydro-6α-methylhydrocortisone and their salts and a pharmaceutically-acceptable carrier.

4,302,453
ANTIARRHYTHMIC TETRAHYDRONAPHTHALENE DERIVATIVES
Frederic P. Hauck, Bridgewater, and Rita T. Fox, Princeton, both of N.J., assignors to E. R. Squibb & Sons, Inc., Princeton, N.J.
Continuation-in-part of Ser. No. 93,654, Nov. 13, 1979, abandoned. This application Oct. 9, 1980, Ser. No. 195,685
Int. Cl.[3] A61K *31/165, 31/535;* C07C *103/29, 103/85*
U.S. Cl. 424—244 **13 Claims**

1. A compound having the formula

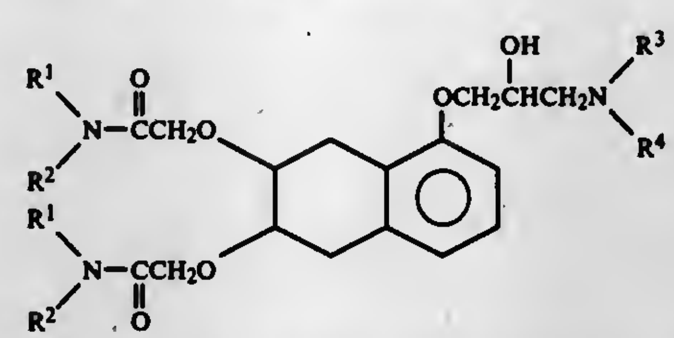

wherein R^1 and R^2 are the same or different and are hydrogen, lower alkyl, lower alkenyl or hydroxy-lower alkyl, or R^1 and R^2 are taken together with the nitrogen atom to which they are attached to form a 5- to 7-membered heterocyclic ring containing one or two heteroatoms, and which may contain in addition to said nitrogen atom, one nitrogen, oxygen or sulfur atom; R^3 and R^4 are the same or different and are hydrogen or lower alkyl, and physiologically acceptable acid-addition salts thereof, and stereoisomers thereof.

13. A method for treating arrythmia in mammalian species which comprises administering a therapeutic amount of a compound as defined in claim 1.

4,302,454
CEPHALOSPORINS
Hirotada Yamada; Takenari Nakagome, both of Nishinomiya, and Toshiaki Komatsu, Takarazuka, all of Japan, assignors to Sumitomo Chemical Company, Limited, Osaka, Japan
Division of Ser. No. 18,212, Mar. 7, 1978, which is a division of Ser. No. 773,729, Mar. 2, 1977, Pat. No. 4,165,373. This application Dec. 19, 1979, Ser. No. 105,440
Claims priority, application Japan, Mar. 3, 1976, 51-23482; Mar. 3, 1976, 51-23483; Mar. 3, 1976, 51-23484; Mar. 3, 1976, 51-23485
Int. Cl.[3] C07D *501/36*
U.S. Cl. 424—246 **5 Claims**

1. A compound of the formula (I):

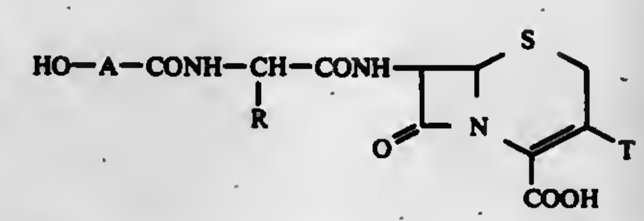

(I)

wherein
A is a naphthyridine ring, a pyrazolopyridine ring, a pyridopyrazine ring, a pyridopyrimidine ring, a pyridine ring or a pyridazine ring, each of which can be substituted with a (C_1–C_4) alkylthio group or a (C_1–C_4)alkyl group;
R is a thienyl group or a phenyl group which is unsubstituted or substituted with a hydroxy group or an amino group;
T is a —CH_2—S—Het group, where Het is a tetrazolopyridazine ring, a triazolopyridazine ring, or a triazolopyridine ring, and the non-toxic, pharmaceutically acceptable salts therof.

4,302,455
2-(4-AMINOPIPERIDINO)PYRAZINES
Joel R. Huff, Gwynedd; Stella W. King, and Walfred S. Saari, both of Lansdale, all of Pa., assignors to Merck & Co., Inc., Rahway, N.J.
Filed Apr. 14, 1980, Ser. No. 140,377
Int. Cl.[3] A61K *31/495;* C07D *401/04, 401/14*
U.S. Cl. 424—250 **9 Claims**

1. A compound of structural formula:

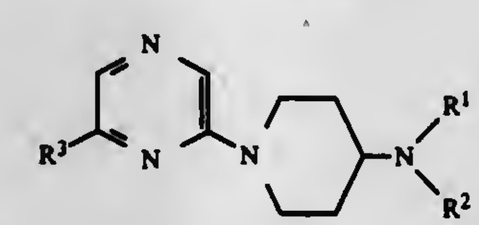

or a pharmaceutically acceptable salt thereof, wherein R^1 is hydrogen or C_{1-3} alkyl; R^2 is hydrogen, C_{1-3} alkyl, or

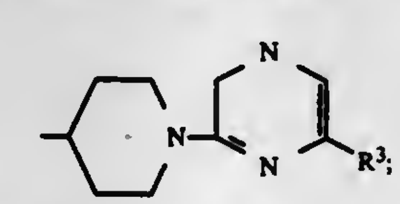

and R^3 is halo, trifluoromethyl, C_{1-3} alkyl, C_{1-3} alkoxy, C_{1-3} alkylthio, phenoxy, phenylthio, di(C_{1-3} alkyl)amino or phenyl.

4,302,456
PROCESS FOR THERAPEUTIC TREATMENT
John J. Voorhees, Ann Arbor, and Wendell Wierenga, Kalamazoo, both of Mich., assignors to The Upjohn Company, Kalamazoo and The Regents of the University of Michigan, Ann Arbor, both of, Mich.
Division of Ser. No. 787,230, Apr. 13, 1977, Pat. No. 4,235,887. This application Aug. 4, 1980, Ser. No. 174,990
Int. Cl.[3] A61K *31/705, 31/505;* C07J *41/00*
U.S. Cl. 424—251 **1 Claim**

1. A process for treating a dermatological disease which comprises:
(a) administering to a human or animal afflicted with a dermatological disease a composition comprising a pro-drug in combination with a pharmaceutical carrier, and
(b) irradiating the diseased area with radiation having a wave length of from about 2500 to about 3600 angstroms in an amount sufficient to convert said administered pro-drug to a pharmaceutically active form and in a concentration effective to alleviate the said disease and the pro-drug is a compound of the formula:

XXXVb

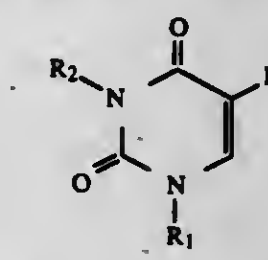

wherein R_1 and R_2 are selected from the group H and

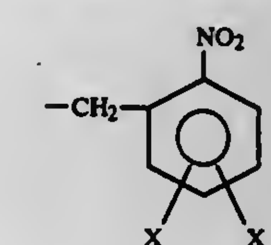

X is H, methoxy, chloro and bromo, provided that one of the groups R_1 and R_2 is not H.

4,302,457
PROCESS FOR THERAPEUTIC TREATMENT
John J. Voorhees, Ann Arbor, and Wendell Wierenga, Kalamazoo, both of Mich., assignors to The Upjohn Company, Kalamazoo and The Regents of the University of Michigan, Ann Arbor, both of, Mich.
Division of Ser. No. 787,230, Apr. 13, 1977, Pat. No. 4,235,887. This application Aug. 4, 1980, Ser. No. 174,991
Int. Cl.[3] A61K *31/705;* C07J *41/00;* A61K *31/505*
U.S. Cl. 424—251 **1 Claim**

1. A process for treating a dermatological disease which comprises:
(a) administering to a human or animal afflicted with a dermatological disease a composition comprising a pro-drug in combination with a pharmaceutical carrier, and
(b) irradiating the diseased area with radiation having a wave length of from about 2500 to about 3600 angstroms in an amount sufficient to convert said administered pro-drug to a pharmaceutically active form and in a concentration effective to alleviate the said disease and the pro-drug is a compound of the formula:

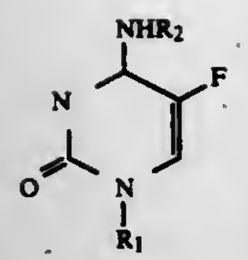

XXVIb

wherein R_1 is H or

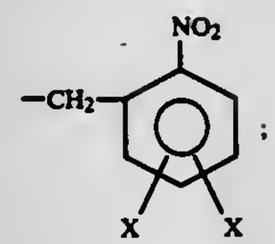

;

R_2 is H,

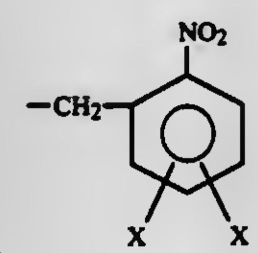

or

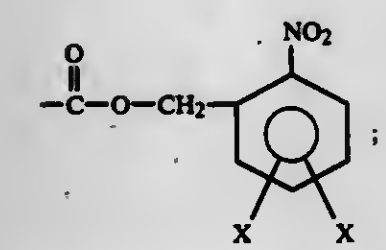

;

and X is H, methoxy, chloro or bromo, provided that one of the groups R_1 and R_2 is not H.

4,302,458

PHTHALIDYL-ISOQUINOLINE DERIVATIVES

Jacques A. Chazerain, Ville d'Avray; Hubert Y. Cotereau, Neuilly-sur-Seine; Pierre H. Lallouette, Sannois; Hugues A. Legger, Courbevoie, and Pierre A. C. Lepape, Paris, all of France, assignors to Laborec Laboratoire de Recherches Biologiques, Asnieres and Calaire Chimie, S.A., Calais, both of, France

Filed Oct. 24, 1979, Ser. No. 87,799

Int. Cl.³ C07D *405/04;* **A61K** *31/47*

U.S. Cl. 424—258 **9 Claims**

1. A compound of the formula

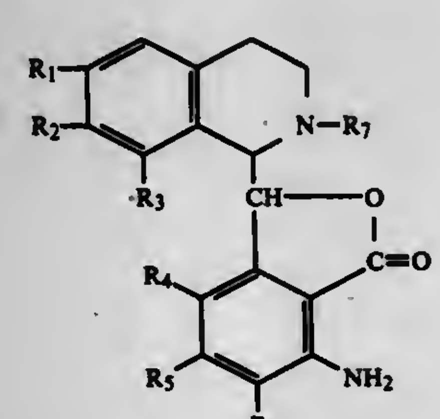

wherein

each of R_1, R_2, R_4, R_5 and R_6 is lower alkoxy;

R_3 is hydrogen or lower alkoxy; and

R_7 is lower alkyl

or a diasterioisomer thereof or a pharmaceutically acceptable acid addition salt thereof.

6. A pharmaceutical composition for inhibiting an allergic condition in a patient which comprises a compound of claim, 2, 1, 3 or 4 and a physiologically acceptable carrier or diluent.

4,302,459

LIPOSOME CARRIERS IN LEISHMANIASIS CHEMOTHERAPY WITH 8-AMINOQUINOLINE DERIVATIVES

Edgar A. Steck, Silver Spring, Md., and Carl R. Alving, Washington, D.C., assignors to The United States of America as represented by the Secretary of the Army, Washington, D.C.

Filed Mar. 19, 1980, Ser. No. 131,576

Int. Cl.³ A61K *31/47*

U.S. Cl. 424—258 **17 Claims**

1. The product prepared by a process for encapsulating an anti-leishmanial 8-aminoquinoline drug within liposomes comprising the steps of:

a. drying a lipid mixture to form a dry film;

b. wetting the lipid film with an aqueous solution of an 8-aminoquinoline drug;

c. mixing the aqueous solution of an 8-aminoquinoline drug and lipid film to form a suspension of an 8-aminoquinoline drug encapsulated by liposomes;

d. separating the liposome-encapsulated drug; and

e. washing the liposome-encapsulated 8-aminoquinoline drug to remove substantially all nonencapsulated 8-aminoquinoline drug therefrom.

4,302,460

4-QUINOLINONES HAVING ANTIHYPERTENSIVE ACTIVITY

Roy V. Davies, Sutton-in-Ashfield; James Fraser; Kenneth J. Nichol, both of Nottingham; Raymond Parkinson, Lowdham; Malcolm F. Sim, Woodborough, and David B. Yates, Farnsfield, all of England, assignors to The Boots Company Limited, Nottingham, England

Filed Mar. 24, 1980, Ser. No. 133,310

Claims priority, application United Kingdom, Mar. 27, 1979, 10558/79; Nov. 15, 1979, 39505/79

Int. Cl.³ A61K *31/47;* **C07D** *215/36*

U.S. Cl. 424—258 **43 Claims**

1. Quinolone compounds of the general formula

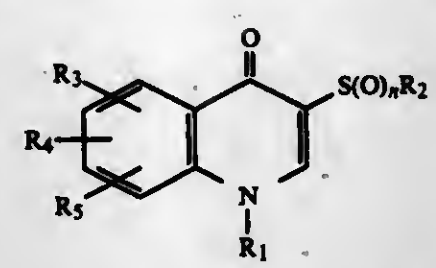

wherein n is 0, 1 or 2; R_1 is lower alkyl optionally substituted by hydroxy or C_{1-4} alkoxycarbonyl; allyl; propynyl or phenyl-lower alkyl in which the phenyl ring is optionally substituted by 1 or 2 C_{1-4} alkoxy groups; R_2 is C_{1-4} alkyl; and R_3 R_4 and R_5, which may be the same or different, are hydrogen, lower alkyl, lower alkoxy, lower alkanoyl, halo, trifluoromethyl or lower alkylthio, with the provisos that

(a) when R_3, R_4 and R_5 are hydrogen R_2 is methyl and R_1 is is lower alkyl, R_1 contains more than one carbon atom, and

(b) when R_3 and R_4 are hydrogen, R_5 is hydrogen or 7-methyl, and R_1 is ethyl, R_2 contains more than one carbon atom.

10. Therapeutic compositions suitable for antihypertensive use which comprise as an active ingredient an antihypertensive amount of a quinolone compound of the general formula

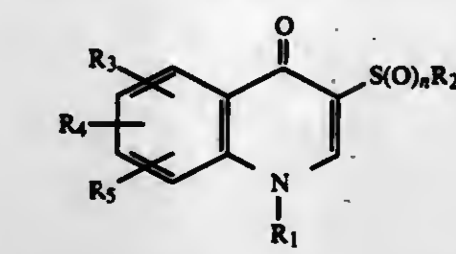

wherein n is 0, 1 or 2; R_1 is lower alkyl optionally substituted by hydroxy or C_{1-4} alkoxycarbonyl; allyl; propynyl or phenyl-lower alkyl in which the phenyl ring is optionally substituted by 1 or 2 C_{1-4} alkoxy groups; R_2 is C_{1-4} alkyl with the proviso that when n is 0, R_2 is methyl; and R_3, R_4 and R_5, which may be the same or different, are hydrogen, lower alkyl, lower alkoxy, lower alkanoyl, halo, trifluoromethyl or lower alkylthio, together with a pharmaceutically acceptable carrier.

24. A method of treating hypertension in a hypertensive warm blooded animal which comprises administering to the hypertensive animal a therapeutically effective amount of a quinolone compound of the formula

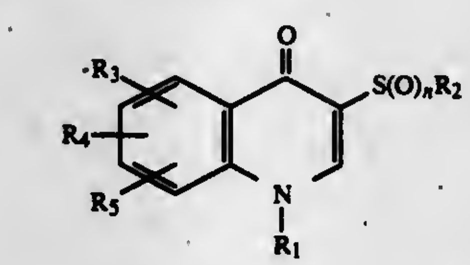

wherein n is 0, 1, or 2; R_1 is lower alkyl optionally substituted by hydroxy or C_{1-4} alkoxycarbonyl; allyl; propynyl or phenyl-lower alkyl in which the phenyl ring is optionally substituted by 1 or 2 C_{1-4} alkoxy groups; R_2 is C_{1-4} alkyl with the proviso that when n is 0, R_2 is methyl; and R_3, R_4, and R_5, which may be the same or different, are hydrogen, lower alkyl, lower alkoxy, lower alkanoyl, halo, trifluoromethyl, or lower alkylthio.

4,302,461

ANTIINFLAMMATORY 5-SUBSTITUTED-2,3-DIARYLTHIOPHENES

Saul C. Cherkofsky, Wilmington, Del., assignor to E. I. Du Pont de Nemours and Company, Wilmington, Del.

Continuation-in-part of Ser. No. 65,069, Aug. 9, 1979, abandoned. This application Jun. 20, 1980, Ser. No. 159,236

Int. Cl.³ A61K *31/44, 31/38;* **C07D** *409/04, 333/34*

U.S. Cl. 424—263 **36 Claims**

1. A compound of the formula:

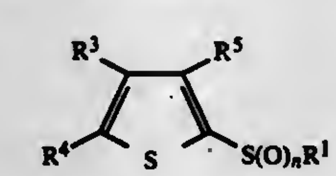

where

R^1 = mono- or polyfluoro C_1–C_6 alkyl or C_1–C_6 alkyl;

n = 0, 1 or 2;

R^3 and R^4 independently = pyridyl or

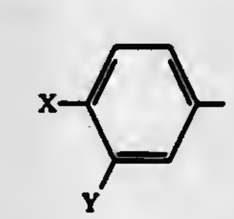

X = H, F, Cl, Br, NO_2, C_1–C_2 alkyl, C_1–C_2 alkoxy, di(C_1–C_2 alkyl)amino, or $S(O)_mR^2$; where

m = 0, 1 or 2; and

R^2 = CH_3 or C_2H_5;

Y = H, F or Cl with the proviso that when Y is F or Cl, then X is F or Cl;

R^5 = H, C_1–C_4 alkyl or allyl; provided

(a) when R^1 = C_1–C_6 alkyl, R^3 and R^4 cannot both be phenyl; or

(b) when n = 2, R^3 and R^4 cannot both be phenyl.

4,302,462

4(OR 3)-(3,4-DIHYDROXYPHENYL)PYRIDINES, THEIR CARDIOTONIC USE AND CARDIOTONIC USE OF THEIR METHYL ETHERS

Joseph C. Collins, East Greenbush; George Y. Lesher, Schodack, and Baldev Singh, East Greenbush, all of N.Y., assignors to Sterling Drug Inc., New York, N.Y.

Continuation-in-part of Ser. No. 105,851, Dec. 20, 1979, abandoned. This application Aug. 4, 1980, Ser. No. 175,283

Int. Cl.³ C07D *213/30;* **A61K** *31/44*

U.S. Cl. 424—263 **5 Claims**

1. 4(or 3)-(3,4-Dihydroxyphenyl)pyridine or pharmaceutically-acceptable acid-addition salt thereof.

4,302,463

1-AZAXANTHONE-3-CARBOXYLIC ACIDS AND THEIR PRODUCTION

Toshihiro Ishiguro; Kiyoshi Ukawa, both of Osaka, and Akira Nohara, Kyoto, all of Japan, assignors to Takeda Chemical Industries, Ltd., Osaka, Japan

Filed Sep. 10, 1980, Ser. No. 185,954

Claims priority, application Japan, Oct. 2, 1979, 54/127694

Int. Cl.³ A61K *31/44;* **C07D** *49/52*

U.S. Cl. 424—263 **22 Claims**

1. A compound of the formula:

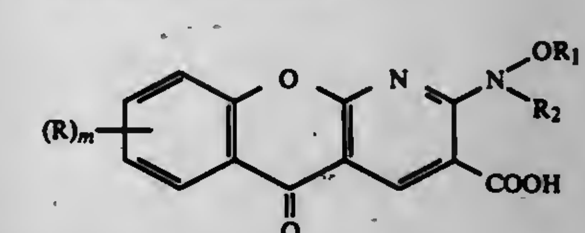

wherein R is hydrogen, alkyl, alkoxy or halogen; R_1 and R_2 are the same or different and each is hydrogen, alkyl or alkenyl; and m is 1 or 2, or its physiologically acceptable salt.

22. A composition for prophylaxis and therapy of allergic diseases which contains an anti-allergically effective amount of a compound of the formula:

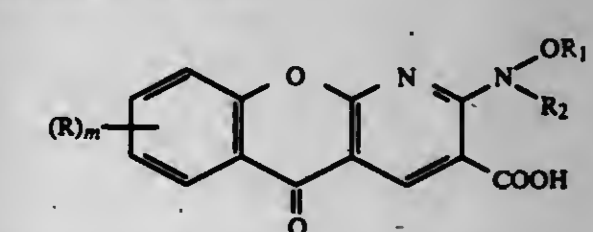

wherein R is hydrogen, alkyl, alkoxy or halogen; R_1 and R_2 are the same or different and each is hydrogen, alkyl or alkenyl; and m is 1 or 2, or its physiologically acceptable salt, and a pharmaceutically acceptable carrier, vehicle or diluent therefor.

4,302,464

IMIDAZOLYLPYRIDINE THERAPEUTIC AGENTS

John L. LaMattina, Ledyard, and Christopher A. Lipinski, Waterford, both of Conn., assignors to Pfizer Inc., New York, N.Y.

Filed Oct. 16, 1980, Ser. No. 197,388
Int. Cl.³ A61K *31/44;* C07D *401/04*
U.S. Cl. 424—263 14 Claims

1. A compound selected from the group consisting of pyridylimidazoles of the formulae:

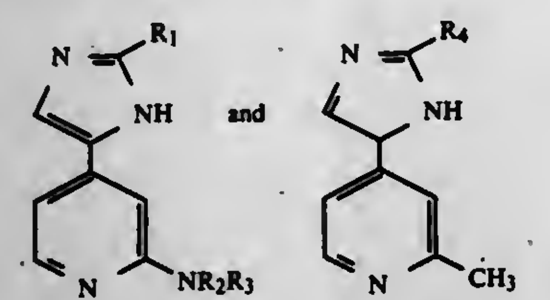

I II

and the pharmaceutically acceptable acid addition salts thereof, wherein R_1 is selected from the group consisting of hydrogen, alkyl having one to three carbon atoms and amino; R_2 and R_3 are each selected from the group consisting of hydrogen, alkyl having one to three carbon atoms and phenylalkyl wherein said alkyl contains from one to three carbon atoms; and R_4 is selected from the group consisting of methyl and amino.

14. A pharmaceutical composition suitable for oral administration comprising a pharmaceutically acceptable carrier and a therapeutically-effective amount of an anti-ulcer agent wherein said agent is a compound as claimed in claim 1.

4,302,465

THERAPEUTICALLY ACTIVE, SUBSTITUTED PIPERIDINES AND PYRROLIDINES THERAPEUTIC COMPOSITIONS THEREOF AND METHODS OF USE THEREOF

Bo T. AF Ekenstam, Box 721, Hjälteby, Sweden (S-440 74), and Gunnar A. K. Aberg, Utsiktsvägen 7, Falkenberg, Sweden (S-311 00)

Filed Nov. 26, 1979, Ser. No. 97,148
Claims priority, application Sweden, Oct. 7, 1979, 7906000
Int. Cl.³ A61K *31/40, 31/445;* C07D *204/14, 211/58*
U.S. Cl. 424—267 23 Claims

1. A compound of the formula

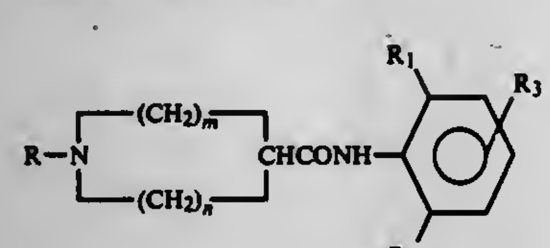

in which m and n are a pair of integers such that m=0 or 1 and n=3−m or m=0, 1 or 2 and n=4−m, R is straight or branched hydroxyalkyl having 2 to 4 carbons and having the hydroxy group in a terminal position, R_1 is selected from the group consisting of methyl and methoxy, R_2 is selected from th group consiting of methyl and ethyl and R_3 is selected from the group consisting of hydrogen and methyl; and pharmaceutically acceptable acid addition salts thereof and quaternary N-methyl halides and quaternary N-ethyl halides thereof.

19. A method of producing local anaesthesia in mammals which comprises administering to the subject in need of such local anaesthesia a therapeutically effective dose of a compound as claimed in claims 1, 2, 3, 4, 5, 6, 7, 8, 9, 10, 11, 12, 13, 14, 15 or 16.

4,302,466

COMBATING PESTS WITH 2,3-DIHYDRO-2,2-DIMETHYL-7-BENZOFURANYL-N-CARBOXYLATED-N-METHYL-CARBAMATES

Gerhard Heywang, Bergisch-Gladbach; Alfons Hartmann, Beckingen; Ingeborg Hammann, Cologne, and Bernhard Homeyer, Leverkusen, all of Fed. Rep. of Germany, assignors to Bayer Aktiengesellschaft, Leverkusen, Fed. Rep. of Germany

Filed Jul. 2, 1980, Ser. No. 166,262
Claims priority, application Fed. Rep. of Germany, Jul. 13, 1979, 2928405
Int. Cl.³ A01N *47/18;* C07D *307/86*
U.S. Cl. 424—267 12 Claims

1. A 2,3-dihydro-2,2-dimethyl-2-benzofuranyl N-carboxylated-N-methyl carbamate of the formula

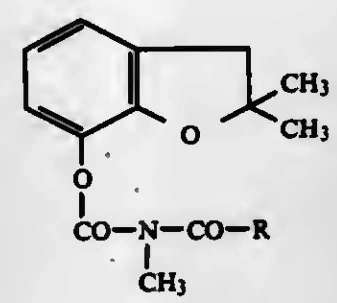

in which

R is alkenoxy or alkynoxy with 3-6 C atoms or a cycloalkoxy radical with 5-7 C atoms each optionally substituted by halogen or by a radical of the formula

$-X-R^1$ or $-NR^2R^3$;

X is an oxygen or sulphur atom or a sulphoxide or sulphone group,

R^1 is hydrogen or alkyl with 1-4 C atoms,

R^2 and R^3 independently is hydrogen, alkyl radical with 1-18 C atoms, alkenyl with up to 8 C atoms, or together are

$-(CH_2)_{2-6}-$, $-CH_2-CH_2-O-CH_2-CH_2-$,
$-CH_2-CH_2-S-CH_2-CH_2-$, or
$-CH_2-CH_2-\underset{W}{\underset{|}{N}}-CH_2-CH_2-$, and

and

W is hydrogen or alkyl with 1-4 C atoms.

2. A 2,3-dihydro-2,2-dimethyl-2-benzofuranyl N-carboxylated-N-methyl carbamate of the formula

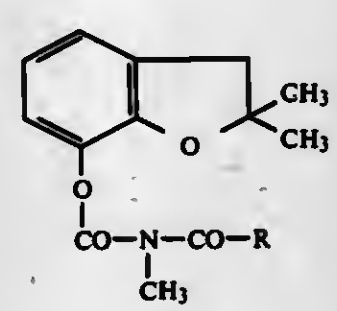

in which

R is alkoxy with 1-10 C atoms substituted by halogen or by a radical of the formula $-X-R^1$ or $-NR^2R^3$;

X is an oxygen or sulphur atom or a sulphoxide or sulphone group,

R^1 is hydrogen or alkyl with 1-4 C atoms,

R^2 and R^3 independently is hydrogen, alkyl radical with 1-18 C atoms, alkenyl with up to 8 C atoms, or together are

$-(CH_2)_{2-6}-$, $-CH_2-CH_2-O-CH_2-CH_2-$
$-CH_2-CH_2-S-CH_2-CH_2-$, or
$-CH_2-CH_2-\underset{W}{\underset{|}{N}}-CH_2-CH_2-$, and

and

W is hydrogen or alkyl with 1-4 C atoms.

4,302,467

ANTIBACTERIAL AND ANTIFUNGAL COMPOSITION

Masayasu Hasegawa, Kyoto; Hideo Nishikawa, Ibaraki, and Yasuo Kotani, Hirakata, all of Japan, assignors to Nippon Gohsei Kagaku Kogyo Kabushiki Kaisha, Osaka, Japan

Division of Ser. No. 58,448, Jul. 18, 1979, Pat. No. 4,242,356.
This application May 20, 1980, Ser. No. 151,652
Claims priority, application Japan, Dec. 26, 1978, 53/161816; Dec. 26, 1978, 53/161817; Dec. 26, 1978, 53/161818; Dec. 26, 1978, 53/161819; Dec. 26, 1978, 53/161820; Dec. 26, 1978, 53/161821; Dec. 26, 1978, 53/161822
Int. Cl.³ A01N *37/06, 37/34, 43/36, 43/78*
U.S. Cl. 424—270 1 Claim

1. An antibacterial and antifungal composition comprising a mixture of:

(A) at least one member selected from the group consisting of sorbic acid, and its alkali metal salts;

and (B) 2-(4-thiazolyl)-1H-Benzimidazole, wherein the weight ratio of component (A) to component (B) is in the range of 95/5 to 60/40.

4,302,468

4-ARYL-5,6,7,8-TETRAHYDROPYRAZOLO(3,4-B)-(1,5)DIAZEPINE-1H,4H-5,7-DIONES AND MEDICAMENTS CONTAINING SAME

Gerhard Rackur, Kelkheim, and Irmgard Hoffmann, Bad Soden am Taunus, both of Fed. Rep. of Germany, assignors to Hoechst Aktiengesellschaft, Frankfurt am Main, Fed. Rep. of Germany

Filed Aug. 12, 1980, Ser. No. 177,411
Claims priority, application Fed. Rep. of Germany, Aug. 14, 1979, 2932835
Int. Cl.³ A61K *31/55;* C07D *487/04;* A61K *31/415*
U.S. Cl. 424—273 B 4 Claims

1. A compound of the formula

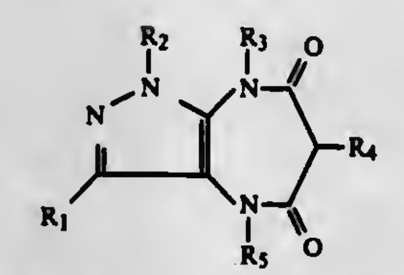 I

in which R_1 and R_2 are identical or different and represent hydrogen atoms or alkyl groups with 1-6 C atoms, it also being possible for one of the radicals R_1 and R_2 to be, in each case, a benzyl, trifluoromethyl or phenyl group, R_3 denotes a hydrogen atom, an alkyl group which has 1–6 C atoms and is optionally substituted by a phenyl group, an alkoxy group with 1–6 C atoms, a trifluoromethyl group, a dialkylamino groups with 2-12 C atoms or a cycloalkyl group with 3-6 C atoms, an alkenyl or alkynyl group with 2–6 C atoms, a cycloalkyl group with 3–6 C atoms or a carbalkoxy group with 2–6 atoms, R_4 is a hydrogen atom and R_5 can be a phenyl group, a phenyl group which is monosubstituted or disubstituted by methyl Cl, Br, F, nitro, cyano and or trifluoromethyl or a pyridyl group.

4. An anxiolytic composition containing as an active ingredient at least one compound according to claim 1 in an amount of from 1 to 50 mg, preferably 5 to 25 mg/dose, in admixture with the usual pharmaceutical excipients and auxiliaries.

4,302,469

2-(1,4-BENZODIOXAN-2-YLALKYL)IMIDAZOLES USEFUL AS ANTIDEPRESSANTS

Arthur F. Kluge, Los Altos; Arthur M. Strosberg, Portola Valley, both of Calif.; Roger Whiting, and George Christie, both of Edinburgh, Scotland, assignors to Syntex (U.S.A.) Inc., Palo Alto, Calif.

Filed Sep. 10, 1980, Ser. No. 185,832
Int. Cl.³ C07D *407/06;* A61K *31/415*
U.S. Cl. 424—273 R 16 Claims

1. A compound of the formula

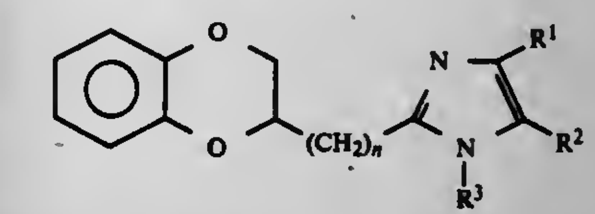 (I)

wherein R^1, R^2 and R^3 are independently selected from the group consisting of hydrogen and lower alkyl, and wherein n is either 0, 1, or 2, and the pharmaceutically acceptable acid addition salts thereof.

8. A composition for treating depression in humans comprising a pharmaceutically acceptable non-toxic excipient and a therapeutically effective amount of a compound of the formula

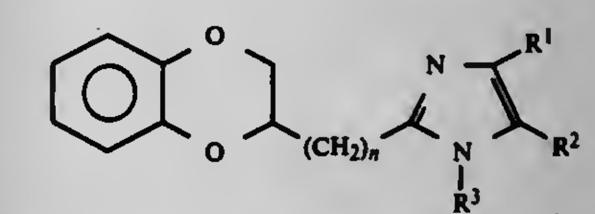 (I)

wherein R^1, R^2 and R^3 are independently selected from the group consisting of hydrogen and lower alkyl, and wherein n is either 0, 1, or 2, or a pharmaceutically acceptable salt thereof.

4,302,470

ACANTHIFOLIC ACID—NEW ANTI-TUMOR AND ANTIBIOTIC AGENT

Francis J. Schmitz; Dick van der Helm; M. Bilayet Hossain; Yalamanchili Gopichand, all of Norman, Okla., and Ravi S. Prasad, Riverdale, Md., assignors to Research Corporation, New York, N.Y.

Filed Jul. 21, 1980, Ser. No. 170,927
Int. Cl.³ C07D *407/14*
U.S. Cl. 424—283 6 Claims

1. A purified bioactive compound of the formula:

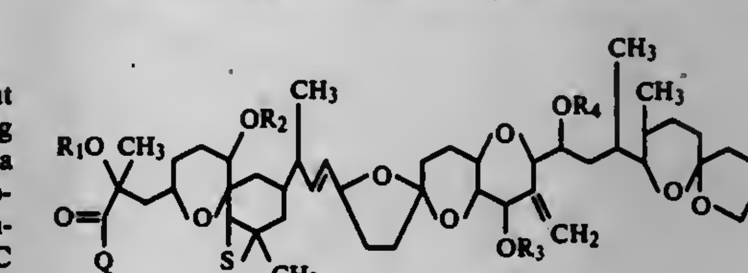

wherein:

Q is selected from the group consisting of OY and NZ_1Z_2;

Y is selected from the group consisting of H, alkyl, hydroxyalkyl, aminoalkyl, substituted aminoalkyl, aryl and a pharmaceutically acceptable cation;

Z_1 and Z_2 are selected from the group consisting of H, alkyl, hydroxyalkyl, aminoalkyl, substituted aminoalkyl, and aryl;

R_1, R_2, R_3 and R_4 are selected from the group consisting of

H, alkyl, hydroxyalkyl, aminoalkyl, substituted aminoalkyl, aryl and

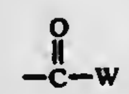

; and

W is selected from the group consisting of H, alkyl, hydroxyalkyl, aminoalkyl, substituted aminoalkyl and aryl.

4,302,471

METHOD OF TREATING CARDIAC AND RENAL FAILURES

Cesare Casagrande, Como, and Giorgio Ferrari, Milan, both of Italy, assignors to Simes Societa Italian Medicinali e Sintetici S.p.A., Milan, Italy

Continuation-in-part of Ser. No. 117,211, Jan. 31, 1980, abandoned, which is a division of Ser. No. 820,007, Jul. 28, 1977, Pat. No. 4,218,470. This application May 20, 1980, Ser. No. 151,632

Claims priority, application Italy, Aug. 5, 1976, 26074 A/76

Int. Cl.[3] A61K *31/215*

U.S. Cl. 424—311 **19 Claims**

1. A method for inducing a response dopamine-like in an animal having impaired cardiovascular or renal functions, comprising administering to said animal an effective amount therefor of a compound having the general formula:

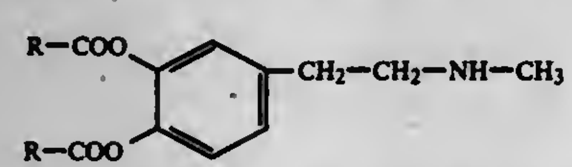

wherein R is a secondary or tertiary alkyl radical having from 3 to 7 carbon atoms, and their salts with nontoxic organic and inorganic acids.

4. A method of treating congestive heart failure or impared renal function comprising administering to a patient suffering therefrom an effective amount of a compound having the following general formula:

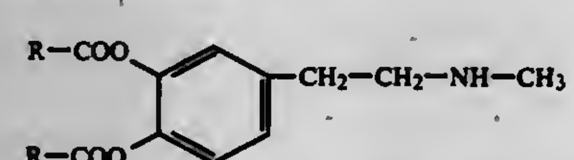

wherein R is a secondary or tertiary alkyl radical having from 3 to 7 carbon atoms, and their salts with nontoxic organic and inorganic acids, in suitable pharmaceutical preparations.

4,302,472

SUBSTITUTED N-(β-ALKOXY-ETHYL)-N-(4-PHENOXY-BENZYL)-DICHLORO-ACETAMIDES AND PROCESS FOR THEIR PREPARATION

Paolo Cozzi, Milan; Piero Menchetti, Lucca; Ivo de Carneri, and Franca Trane, both of Milan, all of Italy, assignors to Farmitalia Carlo Erba S.p.A., Milan, Italy

Continuation of Ser. No. 939,208, Dec. 5, 1978, abandoned. This application Aug. 1, 1979, Ser. No. 62,740

Claims priority, application Italy, Oct. 3, 1977, 28197 A/77; Aug. 4, 1978, 26464 A/78; Aug. 4, 1978, 26465 A/78; Aug. 4, 1979, 26466 A/78

Int. Cl.[3] A61K *31/165*; C07C *97/16, 103/10, 103/32*

U.S. Cl. 424—324 **8 Claims**

1. A compound of the formula

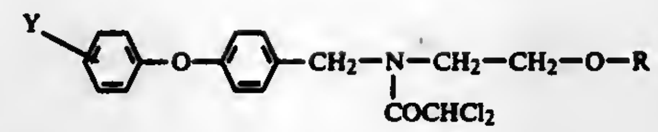

wherein

R is C_1–C_6 alkyl;

Y is (a)

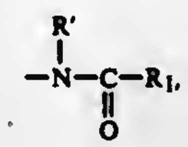

wherein

R' is hydrogen or C_1–C_6 alkyl, and

R_1 is

(1) C_1–C_{12} alkyl

(a') unsubstituted or

(b') substituted by one or more substituents selected from the group consisting of (1) halogen, (2) carboxy, (3) carbamoyl, (4) methylthio, (5) —OR', wherein R' is hydrogen or C_1–C_6 alkyl, (6)

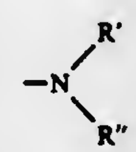

wherein

R' and R" are independently hydrogen or C_1–C_6 alkyl and (7) phenyl, which is unsubstituted or substituted by one or more hydroxy groups; or

(2) phenyl,

(a') unsubstituted or

(b') substituted by one or more substituents selected from the group consisting of (1') halogen, (2'), C_1–C_6 alkyl, (3') trihalo-C_1–C_6—alkyl, (4') nitro, (5')—OR' wherein R' is hydrogen or C_1–C_6 and (6')

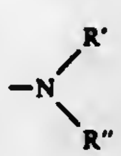

wherein R' and R" are independently hydrogen or C_1–C_6 alkyl

or a pharmaceutically or veterinarily acceptable salt thereof.

5. Method of treating a patient suffering from amebiasis, said method comprising administering to said patient a therapeutically effective amount of a compound of any one of claims 1, 2 or 3.

4,302,473

PROCESS FOR MANUFACTURING SOYBEAN PROTEINS

Yasuo Mikami, Yokohama; Hiroshi Kanda, Zushi, and Akio Uno, Yokohama, all of Japan, assignors to The Nisshin Oil Mills, Ltd., Japan

Filed May 20, 1980, Ser. No. 151,708

Claims priority, application Japan, May 25, 1979, 54-64059

Int. Cl.[3] A23J *3/00*

U.S. Cl. 426—46 **12 Claims**

9. A process for manufacturing soybean proteins comprising the steps of:

providing an aqueous dispersion of alcohol-denatured soybean protein concentrates obtained by washing defatted soybean with an alcoholic aqueous solution and adjusting the pH with ammonia to within a neutral to slightly alkaline range;

solubilizing the soybean proteins by the reaction of a neutral protease on said soybean proteins in said dispersion, wherein the reaction with the neutral protease is continued until the soluble rate of soybean proteins as measured with trichloroacetic acid falls within the range of approximately 20 to approximately 30 percent, and wherein the reaction of the neutral protease is terminated by heating;

removing insolubles from said dispersion to produce an aqueous solution containing said solubilized proteins; and,

recovering said solubilized proteins by spray drying said aqueous solution.

4,302,474

PROCESS FOR PREPARING MAYONNAISE-LIKE FOODS

Yasuo Mikami, Yokohama; Hiroshi Kanda, Zushi, and Akio Uno, Yokohama, all of Japan, assignors to Nisshin Oil Mills, Ltd., Tokyo, Japan

Continuation-in-part of Ser. No. 123,250, Feb. 21, 1980. This application Aug. 13, 1980, Ser. No. 177,556

Claims priority, application Japan, May 8, 1980, 55-60007

Int. Cl.[3] A23L *1/24*

U.S. Cl. 426—52 **3 Claims**

1. A process for the preparation of a mayonnaisde food which comprises the first step of effecting a partial hydrolysis of an alcohol-denatured soybean protein with protease until the solubility of the protein in a 10% by weight aqueous solution of tricholoroacetic acid has reached about 8–15% by weight and removing water-insoluble materials to obtain refined soybean proteins and the second step of adding edible oils, vinegars and seasonings to said refined soybean protein in such a manner that the content of the refined soybean protein on a dry basis is within the range of more than 0.5% by weight and less than 2.5% by weight based on the total weight of the final product and emulsifying them together.

4,302,475

METHOD OF PRODUCING MILO STARCH

Motoichi Shigehiro, Kashiwara, Japan, assignor to Bohsei Enterprise, Ltd., Japan

Filed Jun. 19, 1980, Ser. No. 160,941

Claims priority, application Japan, Jun. 20, 1979, 54-78546

Int. Cl.[3] A23L *1/00*; A23K *1/00*

U.S. Cl. 426—53 **1 Claim**

1. A method of producing milo feed comprising the steps of lactic-fermenting immersion liquid resulting from immersion of white grain milo in a weakly acidic solution of sodium chlorite while maintaining the immersion liquid at a suitable temperature, concentrating the lactic-fermented liquid, mixing the concentrated liquid with bran resulting from refining of raw material milo, and drying the mixture to provide milo feed.

4,302,476

SULFUR DIOXIDE ADDITION TO MUST

James W. Lunt, Fresno, Calif., assignor to Paul Masson, Inc., Saratoga, Calif.

Filed Sep. 4, 1980, Ser. No. 184,145

Int. Cl.[3] C12G *1/04*

U.S. Cl. 426—231 **5 Claims**

1. The process for relatively quickly applying and evenly distributing a substantially accurate amount of sulfur dioxide continuously to must being pumped through a conduit during a wine making procedure to reduce oxidation and to inhibit the growth of natural wild yeast residing in the must, comprising the steps of: pumping must through a first conduit; providing a source of supply of sulfur dioxide; maintaining the sulfur dioxide under constant and uniform pressure; conducting the sulfur dioxide in a second conduit to the must traveling in the first conduit; providing a source of supply of an inert gas under pressure; delivering the inert gas to the second conduit prior to entry of the sulfur dioxide into the first conduit, and shutting off the flow of the sulfur dioxide in the second conduit while allowing the inert gas to continue to flow under pressure in the first conduit to prevent juice from the must migrating back into the second conduit.

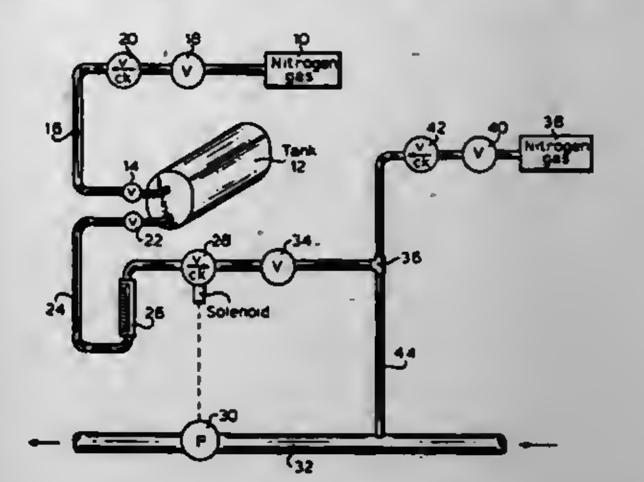

4,302,477

FOOD OR DIETETIC SUBSTANCES HAVING AN ALVEOLAR STRUCTURE AND PROCESS OF PREPARING SAME

Francois Mendy, Boulogne; Sylvain Blain, Corbeil Essonnes, and Roland Domer, Paris, all of France, assignors to Roussel Uclaf, Paris, France

Continuation of Ser. No. 42,110, May 24, 1979, abandoned, which is a continuation of Ser. No. 788,445, Apr. 18, 1977, abandoned. This application Nov. 25, 1980, Ser. No. 210,228

Claims priority, application France, Apr. 20, 1976, 76 11565

Int. Cl.[3] A21D *13/06*

U.S. Cl: 426—250 **11 Claims**

1. A process for preparing a dietetic bakery product having an aveolar structure which consists essentially of the steps of

(a) kneading a mixture consisting essentially of at least 60% of animal or vegetable proteins of which a portion of 16–40% is albumin and the remaining portion is an animal or vegetable protein originated from a proteinaceous material selected from the group consisting of milk, cattle blood, fish, soya or mixtures thereof with the remainder being selected from the group consisting of starches, cereal meals, flavoring agents, coloring agents, and mixtures thereof with a sufficient amount of water to obtain an extrudable paste; subsequently

(b) extruding the extrudable paste at a temperature which is at least ambient but less than the temperature at which the proteins in the paste coagulate to obtain a formable paste product; subsequently

(c) forming the paste product into a desired shape; and subsequently

(d) baking the formed paste product at a baking temperature and for a period of time sufficient to obtain the bakery product.

4,302,478

METHOD OF SHAPING POTATO DOUGH

Michael L. Hamann; Nicholas C. Guidinger, both of Caldwell, and Wayland L Fisher, Boise, all of Id., assignors to J. R. Simplot Company, Boise, Id.

Filed Jun. 9, 1980, Ser. No. 157,252

Int. Cl.[3] A23L *1/216*; A23P *1/00*

U.S. Cl. 426—517 **22 Claims**

1. A method of shaping potato dough into elongated strips for use in simulating strips of natural potato, comprising the steps of:

forming a mass of potato dough, having a moisture content of about 62–74 percent by weight, to include edible oil in an amount by weight up to about 4.0 percent;

feeding the dough into a rotary shaper having a feed roller with axially extending teeth positioned for rotation in

close parallel relation with a rotatable die roller having a plurality of continuous annular channels formed therein;
rotatably driving the feed and die rollers in a direction to draw the mass of dough between the rollers so that the teeth of the feed roller force the dough into the channels

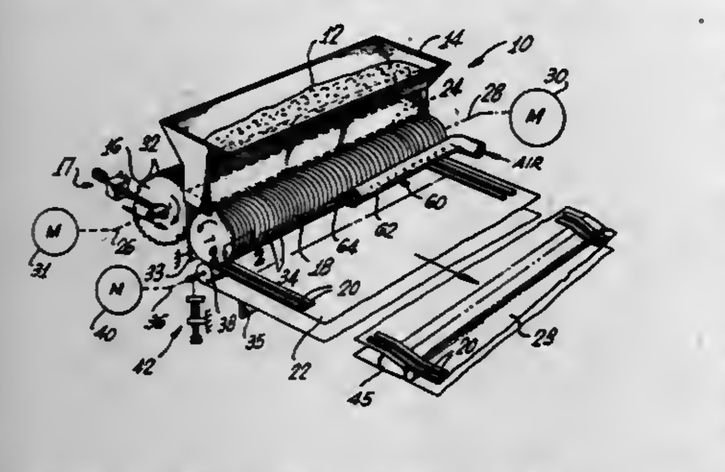

of the die roller to convert the mass of dough into a plurality of dough strips; and
passing a conveyor belt in rolling pressure contact with the die roller and the dough strips in the channels for release of the dough strips from the channels onto the conveyor belt.

4,302,479
PREPARATION OF ISO-ALPHA-ACID-CONTAINING HOP EXTRACTS
Anthony M. Humphrey, Chorley Wood, and Anthony Lewis, London, both of England, assignors to Albright & Wilson Ltd., Warley, England
Continuation of Ser. No. 927,834, Jul. 25, 1978, abandoned, which is a continuation-in-part of Ser. No. 819,564, Jul. 27, 1977, abandoned. This application May 27, 1980, Ser. No. 153,331
Claims priority, application United Kingdom, Jul. 29, 1976, 31620/76
Int. Cl.³ C12C *3/00, 9/02*
U.S. Cl. 426—600 **23 Claims**

1. In the method for the preparation of an isomerized hop extract which consists essentially in extracting alpha-acids from hops with a solvent for alpha-acids to form an alpha-acid-containing hop extract, contacting a solution of said alpha-acids in a water immiscible, non-polar liquid with a base selected from the hydroxides and carbonates of sodium and potassium whereby said base and said alpha-acids react to form salts of the alpha-acids, heating said salts to effect isomerisation thereof, and transferring said isomerised salts, into an aqueous, alkaline phase, the improvement which consists in that a solution of the alpha-acids in a water immiscible non-polar liquid is contacted, prior to conversion into the salt form, with a sufficiently strong aqueous solution of acid to provide a pH of less than 1 in an aqueous phase that separates from said water-immiscible non-polar liquid after contacting said solution of alpha acids with said aqueous solution of acid.

4,302,480
THIN COVER SHEET FOR USE IN MICROSCOPIC STAINING AND A PROCESS FOR ITS PRODUCTION
Wolfgang Fischer, Darmstadt, and Brigitte Wissel, Darmstadt-Eberstadt, both of Fed. Rep. of Germany, assignors to Merck Patent Gesellschaft mit Beschraakter Haftung, Darmstadt, Fed. Rep. of Germany
Filed Jun. 15, 1979, Ser. No. 49,010
Claims priority, application Fed. Rep. of Germany, Jun. 16, 1978, 2826363
The portion of the term of this patent subsequent to Jun. 23, 1998, has been disclaimed.
Int. Cl.³ G01N *1/00, 1/30*
U.S. Cl. 427—2 **6 Claims**

1. A thin cover sheet for use in microscopic staining consisting essentially of a transparent, water insoluble plastic carrier and a dried coating thereon comprising a colorant for microscopic staining, uniformly dispersed within at least one polymer which is soluble both in water and in lower aliphatic alcohols, said colorant and polymer together comprising a mixture whereby, when said cover sheet is placed on a slide supporting a sample with said mixture contacting the sample, said polymer dissolves allowing uniform passage of said colorant to said sample thereby achieving uniform staining of the sample.

6. A method of microscopic staining which comprises applying an aqueous solution or a lower aliphatic alcohol solution onto the side of a microscopic plate containing a test sample to be stained or onto the coating of a thin cover sheet for use in the microscopic staining, said cover sheet having a dried coating thereon comprising a colorant uniformly dispersed within at least one polymer which is soluble both in water and in lower aliphatic alcohols and said colorant and polymer together comprising a mixture, and contacting the test sample side of the microscopic plate and the coating side of the thin cover sheet thereby causing dissolution of the polymer on the thin cover sheet for allowing uniform passage of the colorant to the sample to achieve uniform staining of the sample.

4,302,481
SPRAY METHOD AND SPRAY DEVICE, PARTICULARLY FOR THE SPRAY-COATING OF ARTICLES WITH POWDER
Peter Ribnitz; Hans Giesinger, and Karl Buschor, all of St. Gall, Switzerland, assignors to Gema AG, Switzerland
Filed Nov. 16, 1979, Ser. No. 95,095
Claims priority, application Fed. Rep. of Germany, Nov. 14, 1978, 2849261; Jul. 25, 1979, 2930121
Int. Cl.³ B05B *5/02, 15/02;* **B05D** *1/06*
U.S. Cl. 427—27 **43 Claims**

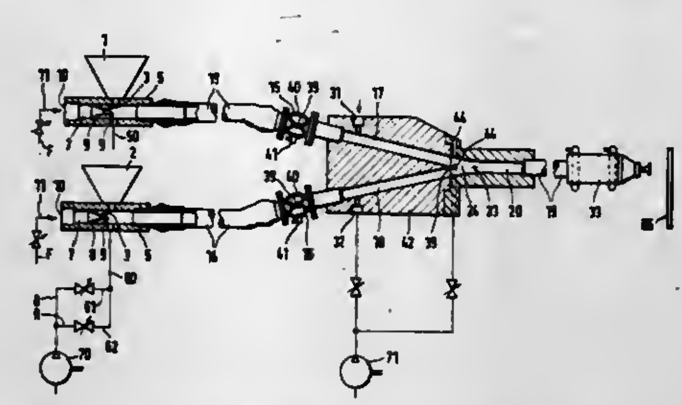

1. A method for spray-coating objects with a powdered coating material selected from a plurality of powdered coating materials, comprising the steps of:
transporting a first powdered coating material via a first feed conduit and a delivery conduit to a spray gun, for spraying an object therewith;
terminating the flow of the powdered coating material;
transporting a second powdered coating material via a second feed conduit and the delivery conduit to the spray gun, for spraying the object therewith; these three steps being performed without changing the relative position of the conduits; and
flushing with a fluid at least a portion of the respective path along which each powdered coating material is transported to the spray gun, the flushing step being performed at least during a time when no powdered coating material is being transported through the portion of the path that is flushed.

4,302,482
PROCESS FOR APPLYING METALLIC SPRAYED COATS TO THE INNER SURFACE OF A HOLLOW BODY
Klaus Heck, Ingolstadt, Fed. Rep. of Germany, assignor to Audi NSU Auto Union Aktiengesellschaft, Fed. Rep. of Germany
Continuation of Ser. No. 940,838, Sep. 8, 1978, abandoned. This application Apr. 14, 1980, Ser. No. 140,003
Claims priority, application Fed. Rep. of Germany, Sep. 1, 1977, 2739356
Int. Cl.³ B05D *1/08*
U.S. Cl. 427—34 **5 Claims**

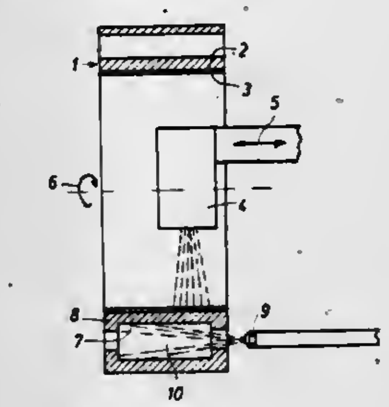

5. In a process for applying a metallic sprayed coat by means of a thermal spraying process to the inner surface of a hollow body, which is composed of a metal having a heat expansion coefficient which is larger than that of the coating metal, the improvement in which the hollow body is heated to a temperature of over 150° C. before coating and is cooled by at least 50° C. during coating, with said cooling being carried out by evaporating a fluid coating medium on the outer surface of the hollow body and the removal of heat from said body being progressively increased relative to the increase in the thickness of the coat being applied whereby adhesion of the coat to the inner surface of the hollow body is improved as a result of positive shrinkage tension created during the coating operation which tension continues to exist during subsequent thermal loading caused by operation of the hollow body and which positive pressure shrinkage tensions during coating increases as the coat thickness increases causing the hollow body to embrace the sprayed coat with increasing force.

4,302,483
METALLIZING OF A CORRODIBLE METAL WITH A PROTECTIVE METAL
Kenneth J. Altorfer, Greenwich, Conn., and Daniel R. Marantz, Port Washington, N.Y., assignors to Texasgulf Inc., Stamford, Conn.
Continuation-in-part of Ser. No. 72,117, Sep. 4, 1979, Pat. No. 4,269,867. This application May 21, 1980, Ser. No. 151,839
Int. Cl.³ B05D *1/02;* **B05B** *5/06;* **C23C** *7/00*
U.S. Cl. 427—37 **16 Claims**

1. Apparatus for spray metallizing a substrate comprising;
an electrically isolated container for holding metal to be sprayed;
a molten metal nozzle within a molten metal nozzle assembly for causing a stream of charged molten metal functioning as a consumable non-stationary electrode to exit as a jet stream within an oppositely charged non-consumable stationary electrode;
a low pressure gas source between the molten metal nozzle and the non-consumable stationary electrode to stabilize the electric arc;
a high pressure gas source between the non-consumable stationary electrode and the outer cap of said molten metal nozzle for propelling the metal from the electric arc to the surface to be metalized;
a conduit for conveying molten metal from the container to the molten metal nozzle;
means for causing molten metal to flow from a container through a conduit to a nozzle; and,

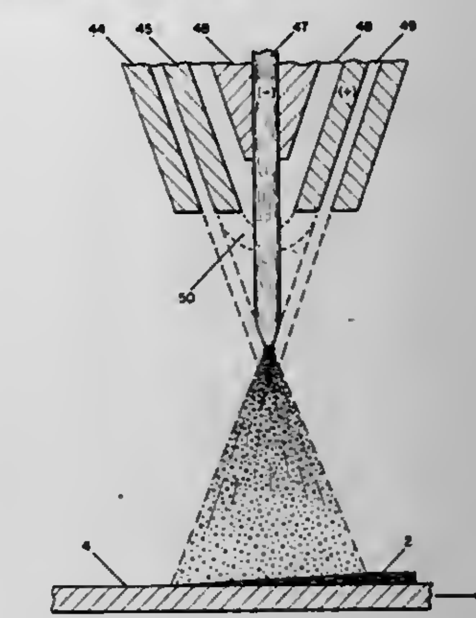

a power supply to cause an arc between the stream of molten metal and the non-consumable stationary electrode.

4,302,484
POLYMERS CROSSLINKABLE BY ELECTRON BEAMS
Hans J. Rosenkranz, Krefeld, Fed. Rep. of Germany, assignor to Bayer Aktiengesellschaft, Fed. Rep. of Germany
Division of Ser. No. 957,894, Nov. 6, 1978, abandoned. This application Dec. 19, 1979, Ser. No. 105,393
Claims priority, application Fed. Rep. of Germany, Nov. 10, 1977, 2750285
Int. Cl.³ B05D *3/06*
U.S. Cl. 427—44 **12 Claims**

1. A method of crosslinking a coating on a substrate, said coating comprising a copolymer of (A) 10 to 90 moles of a C_1–C_{20} alkyl ester of at least one member of the group consisting of acrylic acid and methacrylic acid; (B) 0 to 50 moles of a hydroxyl group containing C_1–C_{10} alkyl ester of at least one member selected from the group consisting of acrylic acid and methacrylic acid and (C) 3 to 70 moles of a monomer of the formula

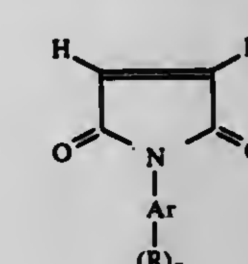

(1)

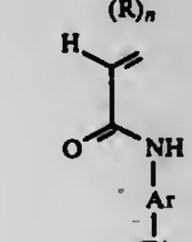

(2)

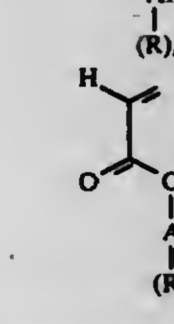

(3)

wherein Ar is a monofunctional to hexafunctional aryl radical having from 6 to 18 carbon atoms and consisting of from 1 to 3 rings; R is hydrogen, alkyl having 1 to 12 carbon atoms, halogen, alkoxy having 1 to 12 carbon atoms, —O—(CH₂C-

H_2—O)$_{1-4}$—H, —O—($CHCH_3$—CH_2O)$_{1-4}$—H, nitro, —COOH, —CHO, —COO-alkyl wherein said alkyl has 1 to 12 carbon atoms, —CN, —$CONH_2$, —CONH-alkyl wherein said alkyl has 1 to 12 carbon atoms, —CON(alkyl)$_2$ wherein alkyl has from 1 to 12 carbon atoms or —NHCO-alkyl wherein said alkyl has 1 to 12 carbon atoms and n is an integer of from 1 to 5, said method comprising subjecting said coating on said substrate to electron beam radiation at a dose of 10^{-6} to 10^{-3} coulombs/cm^2 at an energy of from 1,000 to 100,000 eV.

4,302,485
FABRIC TREATMENT WITH ULTRASOUND
Anthony J. Last, Oakville, and John M. McAndless, Medicine Hat, both of Canada, assignors to Her Majesty the Queen in right of Canada, as represented by the Minister of National Defence, Canada
Filed Feb. 28, 1980, Ser. No. 125,699
Claims priority, application Canada, Jul. 18, 1979, 332065
Int. Cl.³ B05D *3/12, 1/18;* **B05C** *3/12*
U.S. Cl. 427—57 **19 Claims**

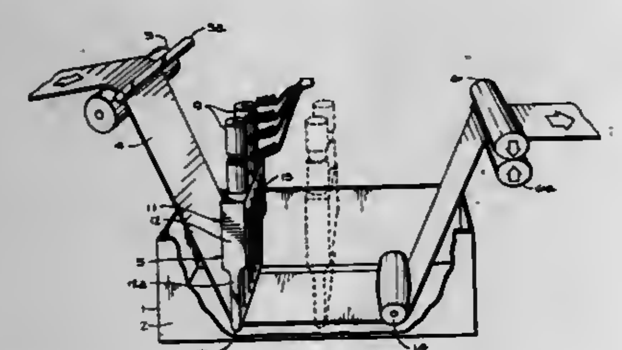

1. A method for the treatment of textile fabric materials with a liquid finishing agent, said textile fabric being selected from the group consisting of nylon/cotton blends and polyester/cotton blends, comprising

(a) providing an open-topped container for a bath of liquid finishing agent,
(b) guiding the fabric material from a supply position downwardly into the container across a guide means including a stationary fabric-contacting surface disposed within said container, to immerse a portion of the length of said fabric material in the bath,
(c) applying high frequency sonic energy to the bath at said stationary fabric-contacting surface at a power level and frequency such that effective cavitation occurs in the bath adjacent the immersed material, said frequency being in the range of 5-50 KHz and said power level expressed as power density at the fabric-contacting surface being in the range of 2-10 acoustic watts/cm^2, and drawing the fabric material through the bath and upwardly out of the bath.

4,302,486
METHOD OF SOLVENT COATING WITH GRAVURE ROLL IN COMBINATION WITH SHEATHED ELASTOMERIC ROLL AND APPARATUS
Warren F. Harbs, Mission Viejo, Calif., assignor to Burroughs Corporation, Detroit, Mich.
Continuation of Ser. No. 973,927, Dec. 28, 1978, abandoned. This application Sep. 17, 1979, Ser. No. 76,371
Int. Cl.³ B05D *5/12*
U.S. Cl. 427—128 **22 Claims**

1. An improved gravure roll coating arrangement adapted to apply a thin film data recording coating to a prescribed substrate and including gravure roll means, this arrangement including:

an ensheathed applicator roll interposed between said substrate and said gravure roll means and operatively combined therewith to transfer said film coating therebetween.

10. An improved method of applying thin film coatings of a prescribed data recording coating material to a prescribed substrate comprising the steps of:

advancing said substrate past a prescribed "coating station" in a prescribed manner;
providing a film of said coating material on the surface of a rotating gravure roll means; and

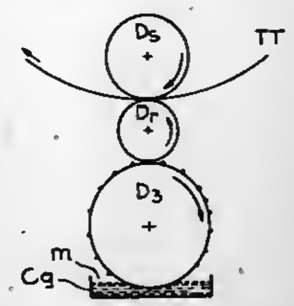

providing ensheathed resilient roll means between said gravure roll means and said "coating station" to transfer said coating material therebetween as a thin film coating on said substrate.

4,302,487
METHOD OF PRODUCING GLOW PRINTING
Jerry D. Lister, Jefferson County, Ky., assignor to Adver-Togs, Inc., New Albany, Ind.
Filed May 27, 1980, Ser. No. 153,578
Int. Cl.³ B05D *1/32, 3/06, 5/06*
U.S. Cl. 427—157 **2 Claims**

1. A method of achieving glow ink printing which comprises the steps of mixing a thinner to a plastisol base at a rate to develop air pockets in the mixed ingredients, adding a solid phosphorescent pigment to said thinned plastisol base for entrainment in said air pockets, applying said mixture of thinned plastisol base and solid phosphorescent pigment to a fabric, and drying the applied mixture.

4,302,488
CELLULOSE FIBER INSULATION PLANT AND PROCESS
Alvin Lowi, Jr., 2146 Toscanini Dr., San Pedro, Calif. 90732
Filed Jul. 17, 1978, Ser. No. 925,666
Int. Cl.³ B05D *7/00*
U.S. Cl. 427—212 **22 Claims**

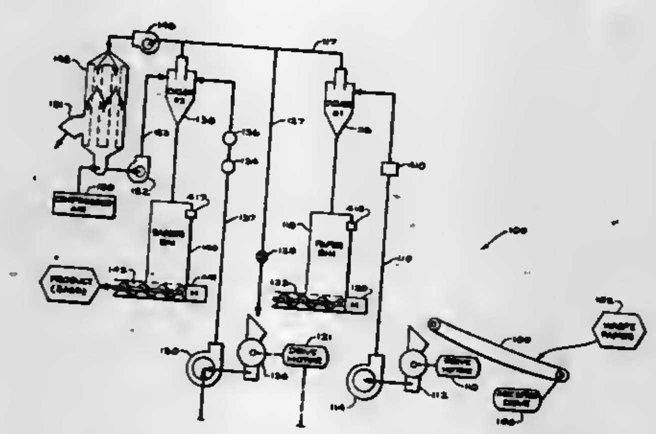

1. A process for continuously impregnating an initially dry first chemical agent into a quantity of fibrous, absorbant, particulate material while controlling both the amount and uniformity of the impregnation of the first chemical agent into the particulate material comprising steps of:

continuously inserting the particulate material into a stream of air flowing in a first flow path for agitating the particles of the material and transporting the particles along the first flow path;
generating a first control signal representative of the rate at which the particulate material is inserted into the first flow path;
preparing a solution of first chemical agent in a solvent;
maintaining a constant concentration of the first chemical agent in the solution;
pumping the solution through a spraying device positioned in the first flow path for moistening the particulate material moving along the first flow path; and
regulating the rate of pumping the solution through the spraying device in response to the first control signal for providing a rate of flow of said solution through the spraying device in constant proportion to the rate of flow of the particulate material along the first flow path.

4,302,489
PROCESS FOR PRODUCING A FOAM SHEET HAVING AN EMBOSSED PATTERN
Kenro Hattori; Takeshi Ogawa; Minoru Ochiai; Takeshi Tomikawa, and Takeji Ikeda, all of Ashikaga, Japan, assignors to Kohkoku Chemical Industry Co. Ltd., Tokyo, Japan
Filed Nov. 10, 1980, Ser. No. 205,072
Claims priority, application Japan, Nov. 19, 1979, 54/149781
Int. Cl.³ B05D *5/00*
U.S. Cl. 427—244 **8 Claims**

1. Process for producing a foam sheet having an embossed pattern comprising a step of printing, in the form of a pattern or design, a coating on selected portions of the surface of a foamable polyvinyl chloride resin sheet material containing a blowing agent which comprises azodicarbonamide as its main ingredient and also containing at least one member of the group consisting of isophoronediamine and dodecyl amine, said coating containing an aliphatic ketone type solvent as its main ingredient and being incapable by itself of substantially inhibiting decomposition of said blowing agent, and a step of subsequently heating the printed foamable polyvinyl resin sheet material to cause portions thereof which have not been printed with said coating to foam to a greater extent than the portions thereof which have been printed with said coating.

4,302,490
PRODUCTION OF AN OZONE REMOVAL FILTER
Norman R. Byrd, Villa Park, Calif., assignor to McDonnell Douglas Corporation, Long Beach, Calif.
Division of Ser. No. 892,975, Apr. 3, 1978, Pat. No. 4,200,609. This application Oct. 9, 1979, Ser. No. 82,789
Int. Cl.³ B05D *3/04*
U.S. Cl. 427—301 **31 Claims**

1. A process for producing a coating including manganese dioxide on a substrate, and effective for removal of ozone from air, which comprises contacting said substrate comprising an oxidizable material with a permanganate solution containing a soluble ceric salt, reducing the permanganate on said substrate to manganese dioxide by the action of said permanganate on said oxidizable material, and forming a coating of manganese dioxide and ceric oxide.

4,302,491
HAIR SIMULATING FIBER
Dimitri G. Papageorgiou, Athens, Greece, assignor to George Papageorgiou, Ann Arbor, Mich. and Paul Papageorgiou, Athens, Greece, part interest to each
Filed Nov. 7, 1977, Ser. No. 849,340
Int. Cl.³ B32B *15/02*
U.S. Cl. 428—15 **4 Claims**

2. A strand for use as simulated hair having self-retaining characteristics for use in a hairpiece or a wig or any other similar or related head cover or ornament which comprises:

(a) a core member in the form of a fine metal wire having a cross-section with major and minor axes, the dimension of the major axis being greater than in the minor axis, and
(b) a coating on said core having the characteristics of a flexible plastic, said coating being stressed in the direction of the major axis to a greater degree than in the direction of the minor axis,
(c) said core being flattened from a round cross-section wherein said coating is stretched radially by said flattened core to a corresponding flattened shape,

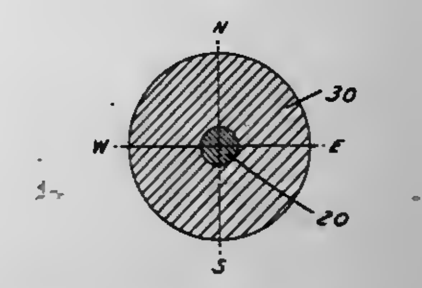

(d) said core member ranging in diameter from about 20 to about 30 microns, and said coating having a diameter in the vicinity of 400 to 500 microns.

4,302,492
ADHESIVE ATTACHMENT
Charles G. Hutter, III, North Hollywood, Calif., assignor to Physical Systems, North Hollywood, Calif.
Filed Sep. 13, 1979, Ser. No. 74,932
Int. Cl.³ B32B *1/00, 7/06*
U.S. Cl. 428—40 **22 Claims**

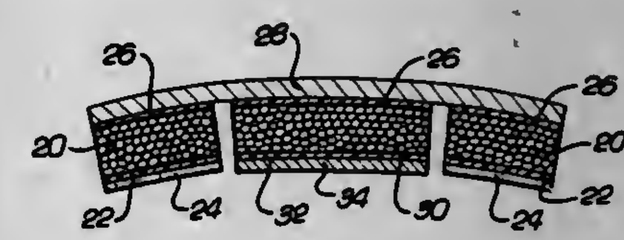

1. Means for applying an attachment to a support which includes:

an attachment;
means supporting said attachment;
connector means adapted for temporary connection of said supporting means with respect to said support; and
said supporting means being movable while temporarily connected with respect to said support by said connector means between a first position for supporting said attachment in a first position out of bearing engagement with said support and a second position for supporting said attachment in a second position in bearing engagement with said support, said supporting means including spring means operable to apply a force to said attachment to urge said attachment in a direction toward said support when said supporting means is in said second position.

4,302,493
DENSE, ELEGANT AND PLIABLE SHEET MATERIAL COMPRISING FIBROUS BASE IMPREGNATED WITH A DIOL-HINDERED AMINE POLYURETHANE SYSTEM
Minoru Tanaka, Gifu, and Kenkichi Yagi, Kyoto, both of Japan, assignors to Toray Industries, Incorporated, Tokyo, Japan
Filed Feb. 20, 1980, Ser. No. 122,845
Claims priority, application Japan, Aug. 14, 1979, 54-103424
Int. Cl.³ B32B *3/00, 27/12, 27/40, 33/00*
U.S. Cl. 428—91 **26 Claims**

1. A composite sheet material comprising a fibrous sheet which is impregnated and/or coated with a polyurethane elastomer wherein said polyurethane elastomer comprises the reaction product of

(A) a polymeric diol having a molecular weight of about 800-5000,
(B) an organic polyisocyanate, and
(C) a chain extender comprising a low molecular weight

organic diol, more than 2 mol % of which comprises a hindered amine compound of the formula (I)

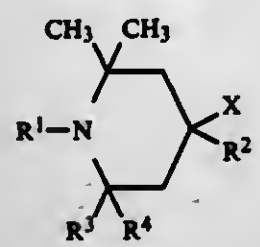

(I)

wherein

R^1 is a substituent selected from the group consisting of hydrogen, oxygen, an alkyl group containing 1-12 carbon atoms, an alkenyl group containing 2-12 carbon atoms, an aralkyl group containing 7-18 carbon atoms, an acyl group containing 1-12 carbon atoms, $-(R^5O)_nH$ and $-(COR^6CO_2R^7O)_m-H$, wherein R^5 is an alkylene group containing 1-12 carbon atoms, R^6 is a residue of an organic dicarboxylic acid containing 2-18 carbon atoms, R^7 is a residue of an organic diol containing 2-12 carbon atoms, n is an integer from 1 to 50 and m is an integer from 1 to 15;

R^2 is a substituent selected from the group consisting of hydrogen, an alkyl group containing 1-12 carbon atoms, an aryl group containing 6-18 carbon atoms, and a cyano group; X is a substituent selected from the group consisting of a hydroxyl group, an amino group and a monoalkylamino group containing 1-12 carbon atoms, and said substituents whose part of or all of hydrogen bonded to oxygen and/or nitrogen may be substituted by $-(R^5O)_n-H$ and/or $-(COR^6CO_2R^7O)_m-H$, and

wherein R^3 and R^4 are the same or different alkyl groups containing 1-12 carbon atoms, R^3 and R^4 being independent or bonded to form a 5-12 member alicyclic ring.

6. The composite sheet material of claim 1, wherein said fibrous sheet comprises a non-woven fabric.

7. The composite sheet material of claim 1, wherein said fibrous sheet comprises a woven fabric.

9. The composite sheet material of claim 1, wherein said composite sheet material has naps consisting of superfine denier filaments or fibers on at least one surface.

4,302,494

PILE WEATHERSTRIPPING

Robert C. Horton, 90 Fairhill Dr., Rochester, N.Y. 14618

Filed Apr. 26, 1973, Ser. No. 354,893

Int. Cl.³ B32B *5/18*

U.S. Cl. 428—95 **14 Claims**

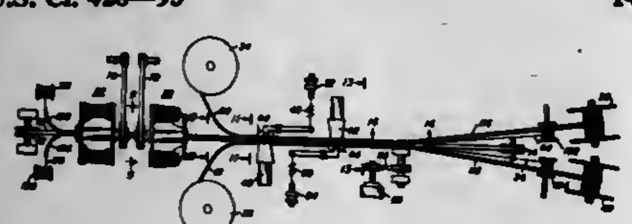

6. A pile weather stripping comprising a strip of thermoplastic material, and a pile of thermoplastic material yarn formed by winding around an endless travelling band, said yarn and strip being welded together while said pile is on said band, and the edge of said band brings the yarn wound thereon and the side of said strip into proximity with each other for welding and the yarn being slit while said yarn is on said band to form said pile, a tape of thermoplastic film material disposed longitudinally along said weather strip and within said yarn, said tape being wound upon said band and said yarn being wound around said tape, and said tape being slit with said yarn while on said band.

4,302,495

NONWOVEN FABRIC OF NETTING AND THERMOPLASTIC POLYMERIC MICROFIBERS

Joseph V. Marra, Wilmington, Del., assignor to Hercules Incorporated, Wilmington, Del.

Filed Aug. 14, 1980, Ser. No. 178,064

Int. Cl.³ B32B *5/12*

U.S. Cl. 428—110 **10 Claims**

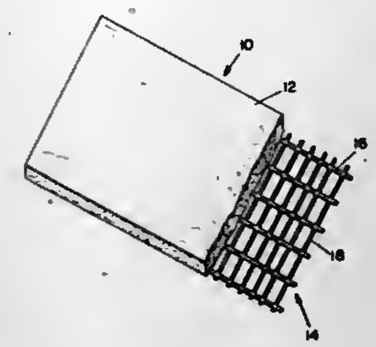

1. A nonwoven fabric-like material comprising at least one integrated mat of generally discontinuous, thermoplastic polymeric microfibers, said mat including randomly laid, discontinuous filaments having an average filament diameter between about 0.5 micron and about 30 microns and having a basis weight of between about 10 and about 50 grams per square meter and at least one layer of nonwoven continuous, linearly oriented thermoplastic netting having at least two sets of strands wherein each set of strands crosses another set of strands at a fixed angle and having uniformly sized openings, said netting and said integrated mat bonded together by heat and pressure to form a multi-layer nonwoven fabric of substantially uniform thickness.

4,302,496

COMPOSITE WATERPROOF AND FLAME RESISTANT FABRICS

James G. Donovan, Norwell, Mass., assignor to Albany International Corp., Albany, N.Y.

Filed Oct. 21, 1980, Ser. No. 199,270

Int. Cl.³ B32B *3/00*

U.S. Cl. 428—196 **5 Claims**

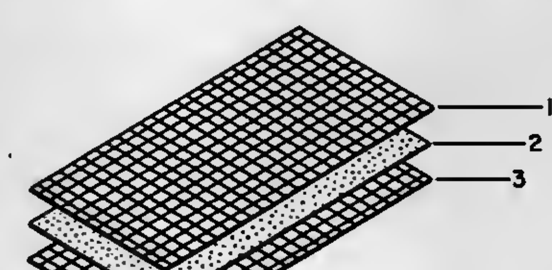

1. A composite fabric comprising, in combination
- a woven outer ply of flame resistant filamentary polymer selected from the group comprising meta-substituted polyaramide and copolymers thereof,
- a woven inner ply of flame resistant filamentary polymer selected from the gronp comprising para-substituted polyaramide and copolymers thereof, and
- a continuous middle ply bonded to the outer and inner plies and comprising a hydrophobic material having a moisture vapor transmission rate exceeding 1000 grams/m.²/day and an advancing water contact angle exceeding 90 degrees.

4,302,497

DECORATED SYNTHETIC RESIN SHEET

Yasuo Toyooka; Kunio Ohnishi; Haruo Murase, and Tadaomi Ueno, all of Toyama, Japan, assignors to Mitsubishi Rayon Co., Ltd., Tokyo, Japan

Division of Ser. No. 22,492, Mar. 21, 1979. This application Feb. 20, 1980, Ser. No. 122,863

Claims priority, application Japan, Mar. 24, 1978, 53-33676

Int. Cl.² B32B *3/00, 31/30*

U.S. Cl. 428—203 **8 Claims**

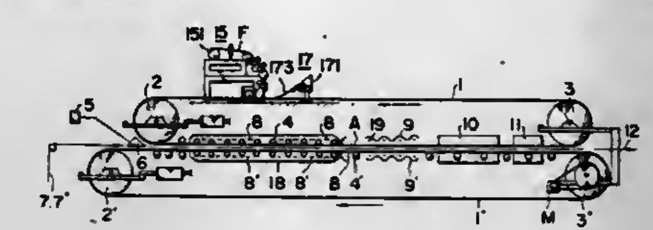

1. A synthetic resin sheet product comprising a continuously cast sheet of polymerized synthetic resin syrup integrally joined on at least one side with one side of an unwrinkled uniformly thick preformed film of polymerized synthetic resin that is compatible with said syrup and on which said syrup has been continuously cast so as to initially cause partial softening and dissolving of said one side of the film with the syrup and subsequent integration therewith by polymerization of the syrup, said sheet being continuously cast with a uniform thickness throughout.

2. The product of claim 1 in which said film is transparent and its said one side has printing applied to it prior to said syrup being cast on it, said printing being integrally buried undistorted and without loss of definition within said product in the film's said one side which partially softened and dissolved in said syrup.

4,302,498

LAMINATED CONDUCTING FILM ON AN INTEGRATED CIRCUIT SUBSTRATE AND METHOD OF FORMING THE LAMINATE

Thomas J. Faith, Jr., Lawrenceville, N.J., assignor to RCA Corporation, New York, N.Y.

Filed Oct. 28, 1980, Ser. No. 201,438

Int. Cl.³ C23C *13/02, 13/04*

U.S. Cl. 428—209 **15 Claims**

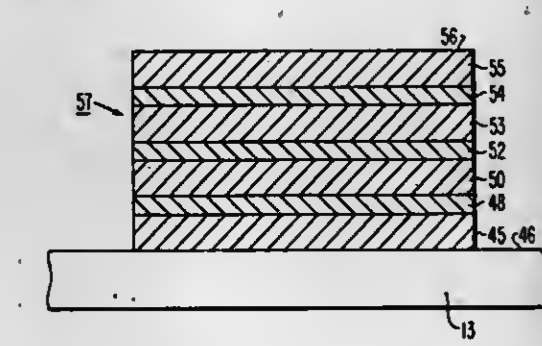

1. A method of forming by deposition a laminated conducting film on an integrated circuit substance in a vacuum chamber comprising the steps of:
- depositing aluminum on the substrate;
- periodically introducing dry oxygen into the chamber while depositing the aluminum to provide a laminated film of alternate layers of aluminum and oxygen-doped aluminum, the oxygen-doped layers of aluminum having less than 10 atomic percent oxygen; and
- interrupting the flow of oxygen to form the top layer of aluminum to a thickness of no less than about 1,500 angstroms and no more than about 3,000 angstroms;
- the laminated film having a composite thickness in the range of 8000-25,000 angstroms.

4,302,499

MOLDABLE COMPOSITE

William E. Grisch, Elburn, Ill., assignor to Armco Inc., Middletown, Ohio

Continuation-in-part of Ser. No. 911,491, Jun. 1, 1978, Pat. No. 4,207,282. This application Dec. 26, 1979, Ser. No. 107,353

Int. Cl.³ B32B *5/02*

U.S. Cl. 428—236 **5 Claims**

1. A reinforced composite suitable for conversion into a finished product by compression molding at temperatures of 100°-165° C. and pressures of 500-3000 p.s.i. (35-210 kg. per sq. cm.) comprising
- a uniform layer of a dry partially cured curable thermosetting polymeric material capable of being liquified by heat including a reinforcing proportion of reinforcing fibers, and
- a fabric overlying at least one surface of said layer, said fabric having a grab break strength of at least 10 lbs. (4.5 kg.) in both longitudinal and transverse directions, and a tensile elongation of at least 10%, said fabric being sufficiently permeable to permit liquid polymeric material to pass therethrough during compression molding.

4,302,500

BREATHABLE SURGICAL ADHESIVE TAPE

Richard D. Flora, Lake Oswego, Oreg., assignor to Shur Medical Corporation, Portland, Oreg.

Filed Jan. 7, 1980, Ser. No. 109,834

Int. Cl.³ C09U *7/02*

U.S. Cl. 428—284 **6 Claims**

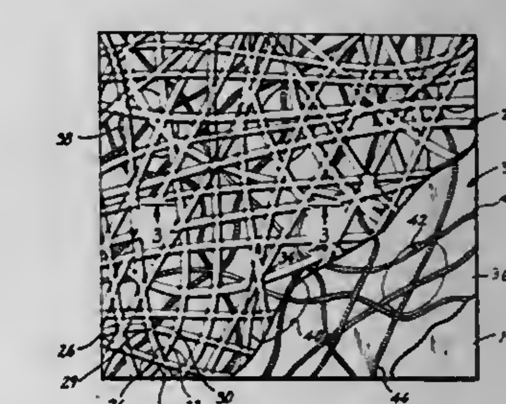

1. Breathable, surgical adhesive tape comprising:
- a permeable backing strip sufficiently strong to hold a wound closed when the tape is applied to skin of a human or other animal subject, the backing strip being formed of substantially continuous polymeric filaments which
  (a) are substantially randomly oriented in a plane,
  (b) define open spaces through the strip, and
  (c) are secured together at crossover points; and
- an adhesive strip comprising a layer of pressure-sensitive adhesive bonded to the backing strip, on one side thereof, and forming a laminate therewith, the adhesive strip having a plurality of pores positioned randomly with respect to the open spaces through the backing strip.

4,302,501

POROUS, HEAT RESISTANT INSULATING SUBSTRATES FOR USE IN PRINTED CIRCUIT BOARDS, PRINTED CIRCUIT BOARDS UTILIZING THE SAME AND METHOD OF MANUFACTURING INSULATING SUBSTRATES AND PRINTED CIRCUIT BOARDS

Koreyuki Nagashima, 3-10, Koenji-Kita 2-chome, Suginami-ku, Tokyo, Japan

Continuation of Ser. No. 752,329, Dec. 20, 1976, abandoned. This application Jun. 8, 1978, Ser. No. 913,879

Claims priority, application Japan, Dec. 24, 1975, 52/154300

Int. Cl.² B32B *5/26, 5/28, 5/32;* **H05K** *1/00*

U.S. Cl. 428—304 **15 Claims**

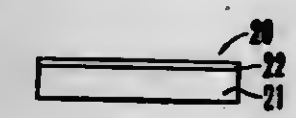

1. An insulating substrate for use as a printed circuit board comprising a porous insulating sheet which contains cellulose material as the essential component thereof, and a a resin impregnated insulating sheet bonded to at least one surface of the porous insulating sheet, said porous insulating sheet being sufficiently porous to allow gas evolved in said substrate during soldering to readily escape through said porous insulating sheet, said insulating substrate providing a printed circuit board formed therefrom with heat resistance to solder at 260° C. for at least 30 seconds and thus avoid blistering of said printed circuit board.

5. A printed circuit board comprising an insulating substrate made up of a porous insulating sheet containing cellulose material as the essential component thereof and at least one resin impregnated insulating sheet bonded to at least one surface of said porous insulating sheet, and electric conductors arranged in a predetermined circuit pattern on the surface of said prepreg, said porous insulating sheet being sufficiently porous to allow gas evolved in said substrate during soldering to readily escape through said porous insulating sheet, said insulating substrate providing a printed circuit board formed therefrom with heat resistance to solder at 260° C. for at least 30 seconds and thus avoid blistering of said printed circuit board.

11. An insulating substrate for use as a printed circuit board comprising a porous insulating sheet that contains cellulose material as the essential component thereof, said porous insulating sheet being from 1 to 5 mm thick, and one resin impregnated insulating sheet bonded to at least one surface of the porous insulating sheet, said porous insulating sheet being sufficiently porous to allow gas evolved in said substrate during soldering to readily escape through said porous insulating sheet, said insulating substrate providing a printed circuit board formed therefrom with heat resistance to solder at 260° C. for at least 30 seconds and thus avoid blistering of said printed circuit board.

4,302,502

CERAMIC POROUS BODIES

Tsuneaki Narumiya, Yokohama, Japan, assignor to Bridgestone Tire Company Limited, Tokyo, Japan

Filed Oct. 21, 1980, Ser. No. 198,994

Claims priority, application Japan, Oct. 30, 1979, 54-140100

Int. Cl.³ B32B *3/26, 9/00*

U.S. Cl. 428—311 **2 Claims**

1. A ceramic porous body useful as a filtering material for molten metal and having a three-dimensional network cellular structure with a plurality of interconnected voids without clogging in any direction, characterized in that said ceramic porous body is formed by covering surfaces of cell strands of a ceramic porous body skeleton consisting essentially of silica, alumina and magnesia and having a bulk specific gravity of 0.3–0.6 with an activation layer consisting of 3–40% by weight per the weight of the skeleton of an activated alumina and 0.5–10% by weight of a flux for aluminum and has an average diameter of said interconnected voids of 0.3–5.0 mm, a pressure loss of 0.3–30 mm as a water-gauge pressure when passing air through the body of 1 cm thick at a rate of 1 m/sec., a microsurface area of not less than 10 m^2/g, and a porosity of 75–95%.

4,302,503

ARCHITECTURAL SPANDREL

Paul T. Mattimoe, Toledo, Ohio, assignor to Libbey-Owens-Ford Company, Toledo, Ohio

Filed May 17, 1978, Ser. No. 906,834

Int. Cl.³ B32B *5/16, 7/00, 15/16, 17/06*

U.S. Cl. 428—323 **9 Claims**

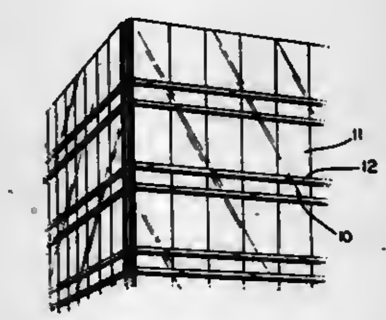

1. An architectural panel consisting essentially of a transparent substrate, a transparent reflective coating disposed on a major surface of said substrate, a black opaque coating disposed over said transparent coating and including a light absorbing component dispersed therein in an amount sufficient to limit the Illuminant C diffuse reflectance of the panel when viewed from the uncoated surface of the substrate to not more than 0.3 percent, an adhesive applied to said opaque coating, and a layer of insulating material adhered to said adhesive.

4,302,504

FILM-FORMING COMPOSITION

Robert C. Lansbury, St. Albans, and Thomas G. Heggs, Welwyn, both of England, assignors to Imperial Chemical Industries Limited, London, England

Filed May 24, 1976, Ser. No. 689,544

Claims priority, application United Kingdom, Jun. 11, 1975, 25010/75

Int. Cl.³ B32B *27/08, 27/32*

U.S. Cl. 428—332 **5 Claims**

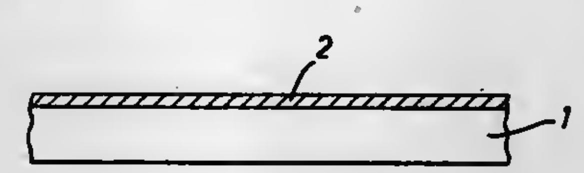

1. A multiple-layer film comprising a substrate layer of a homo- or co-polymer of an alpha-olefin the molecule of which contains from 2 to 6 carbon atoms, said substrate layer having a first and a second surface, and, on at least one of said surfaces of the substrate, a heat sealable layer formed from a composition comprising a blend of

(a) a substantially crystalline copolymer of propylene with an alpha-olefin containing from 4 to 10 carbon atoms in its molecule, the propylene content of the copolymer being from 80 to 95% by weight of the copolymer, and

(b) a second polymer comprising a homopolymer of an alpha-olefin containing from 4 to 10 carbon atoms in its molecule or a substantially crystalline copolymer in which said alpha-olefin is copolymerised with up to 10% by weight, based on the weight of the copolymer, of an alpha-olefin containing from 2 to 10 carbon atoms in its molecule,

the second polymer constituting from 25 to 90% by weight of the composition.

5. A biaxially oriented multiple-layer film comprising a substrate layer of a propylene homopolymer or a copolymer of propylene with from 0.5 to 10% of ethylene by weight of the copolymer, said substrate layer having a first and a second surface, and, on at least one of said surfaces of the substrate, a coextruded heat sealable layer formed from a blend comprising from 65 to 35% by weight of a propylene/butene-1 substantially crystalline random copolymer containing from 10 to 15% of butene-1 by weight of said random copolymer, and from 35 to 65% by weight of a substantially crystalline butene-1 homopolymer.

4,302,505

DUAL LAYERED ANTISTATIC COATED POLYESTER FILM

John M. Heberger, Greer, S.C., assignor to American Hoechst Corp., Somerville, N.J.

Continuation-in-part of Ser. No. 1,328, Jan. 5, 1979, abandoned, and a continuation-in-part of Ser. No. 8,021, Jan. 31, 1979, Pat. No. 4,214,035. This application Apr. 25, 1980, Ser. No. 143,701

Int. Cl.³ B32B *27/08, 27/30, 27/36*

U.S. Cl. 428—341 **11 Claims**

1. A biaxially oriented polyester film comprising a polyester film support coated on both sides with a latex coating, said coating including:

stearamidopropyldimethyl-β-hydroxy-ethylammonium nitrate, present in a concentration in the range of between 2.75% and 3.25% by weight, based on the total weight of the latex coating; and a crosslinkable methylmethacrylate-ethylacrylate-methacrylamide terpolymer, having a glass transition temperature in the range of between about 40° C. and 50° C., present in a concentration in the range of between about 0.75% and 1.25% by weight based on the total weight of the latex coating wherein the weight ratio of said stearamidopropyldimethyl-β-hydroxy-ethylammonium nitrate to said crosslinkable methylmethacrylate-ethyl acrylate-methacrylamide terpolymer is in the range of between about 2.75:1 and 3.25:1.

2. A biaxially oriented polyester film in accordance with claim 1 wherein the total dry coating weight of said coating on said polyester film is at least 0.003 pounds per 1000 square feet of biaxially oriented film.

4,302,506

SLIP COATED POLYESTER FILM

John M. Heberger, Greer, S.C., assignor to American Hoechst Corporation, Somerville, N.J.

Continuation-in-part of Ser. No. 1,328, Jan. 5, 1979, abandoned, and a continuation-in-part of Ser. No. 8,021, Jan. 31, 1979, Pat. No. 4,214,035, and a continuation-in-part of Ser. No. 143,701, Apr. 25, 1980. This application Jun. 12, 1980, Ser. No. 158,661

Int. Cl.³ B32B *27/08, 27/30, 27/36*

U.S. Cl. 428—341 **12 Claims**

1. A biaxially oriented polyester film comprising a polyester film support coated on one or both sides with a latex coating, said coating comprising:

stearamidopropyldimethyl-β-hydroxy-ethylammonium nitrate, present in a concentration in the range of between 2.75 percent and 3.25 percent by weight, based on the total weight of the latex coating; and a cross-linkable methylmethacrylate-ethyl acrylatemethacrylamide terpolymer, having a glass transition temperature in the range of between about 40° C. and 50° C., present in a concentration in the range of between about 0.75 percent and 1.25 percent by weight based on the total weight of the latex coating wherein the weight ratio of said stearamidopropyldimethyl-β-hydroxy-ethylammonium nitrate to said cross-linkable methylmethacrylate-ethyl acrylate-methacrylamide terpolymer is in the range of between about 2.75:1 and 3.25:1 and wherein the total dry coating weight of said coating on said polyester film is less than 0.003 pounds per thousand square feet of biaxially oriented film.

4,302,507

TWO-CONSTITUENT POLYAMIDE FILAMENT AND THE PROCESS FOR ITS PRODUCTION

Claude Cerutti, Saint Symphorien D'Ozon; Jean Goletto, Ecully; Robert Habault, Lyons, and Yves Vaginay, Saint Priest, all of France, assignors to Rhone-Poulenc Textile, Paris, France

Continuation of Ser. No. 958,556, Nov. 7, 1978, abandoned. This application Mar. 21, 1980, Ser. No. 132,418

Claims priority, application France, Nov. 10, 1977, 77 34207

Int. Cl.³ D02G *3/00*

U.S. Cl. 428—373 **7 Claims**

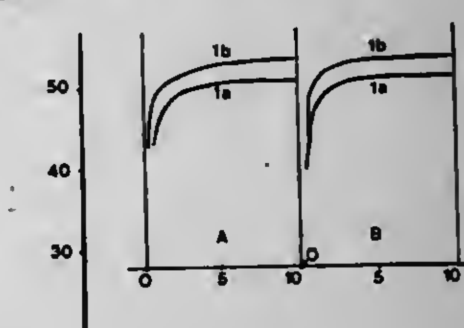

1. Textile filament having two continuous constituents over the whole length of the filament, said textile filament being capable of being made up into knitted fabrics of high elastic recovery without requiring a steam treatment, characterized in that one of the constituents is polyhexamethyleneadipamide and the other constituent is a copolyamide produced from caprolactam and at least one long-chain amide-forming difunctional reactant which is essentially saturated and pure and which possesses a divalent aliphatic or cycloaliphatic hydrocarbon radical containing at least 20 carbon atoms, and optionally possessing at least one hydrocarbon substituent, the said long-chain difunctional reactant being either a diacid or a diamine in the form of their salts formed with one another or with another saturated diamine or diacid.

4,302,508

SILICON CARBIDE ELEMENTS

Frank J. Hierholzer, Jr., Florissant; John A. Ancona, Affton, and Gerald L. Shelton, St. Louis, all of Mo., assignors to Emerson Electric Co., St. Louis, Mo.

Continuation of Ser. No. 513,729, Oct. 10, 1974, abandoned, which is a continuation-in-part of Ser. No. 355,574, Apr. 30, 1973, abandoned, and Ser. No. 330,486, Feb. 8, 1973, abandoned, which is a continuation-in-part of Ser. No. 229,789, Feb. 28, 1972, Pat. No. 3,764,776, said Ser. No. 355,574, is a division of Ser. No. 229,789. This application Sep. 12, 1977, Ser. No. 832,555

Int. Cl.³ B32B *9/00*

U.S. Cl. 428—367 **18 Claims**

1. An elongate monolithic element composed of silicon carbide and formed in a U-shaped loop, characterized in that at least a portion of said loop is in a serpentine form and in that

said element further comprises a continuous groove extending downwardly from a surface thereof, said groove being less

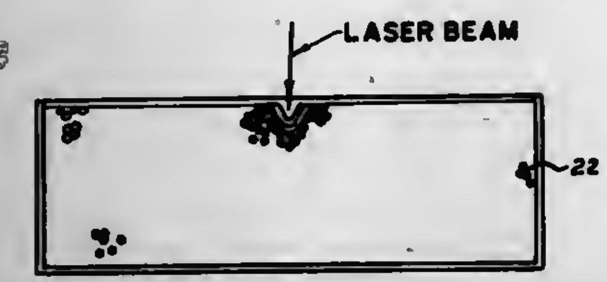

than half the width of said surface and being deep relative to its width, said groove following said serpentine form.

4,302,509
SORBENT-CORED TEXTILE YARNS

Myron J. Coplan, Natick, and George Lopatin, Newton, both of Mass., assignors to Albany International Corp., Albany, N.Y.

Continuation of Ser. No. 14,071, Feb. 22, 1979, abandoned. This application Jun. 6, 1980, Ser. No. 157,103
Int. Cl.^{3} D02G *3/00*
U.S. Cl. 428—398 **6 Claims**

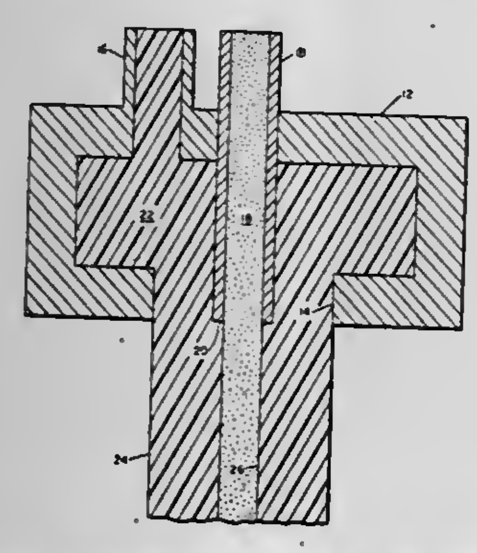

1. A sorbent multifilament textile yarn comprising filaments each of a denier in the range between 2 and 30 and a diameter between 0.001 and 0.01 inch, each filament consisting essentially of a hollow polymeric sheath having a microporous wall, the polymer of said sheath having voids therein that are mutually interconnected, said sheath having a central lumen, and a core of active sorbent material in said lumen, said microporous wall being permeable to organic liquids and vapors passing between the exterior of the sheath and said core.

4,302,510
MAGNETIC RECORDING MEDIUM

Shinji Umeki; Kazuaki Onuki, and Fumio Maruta, all of Tokyc, Japan, assignors to TDK Electronics Co., Ltd., Tokyo, Japan

Continuation of Ser. No. 16,008, Feb. 28, 1979, abandoned. This application Apr. 25, 1980, Ser. No. 143,895
Claims priority, application Japan, Mar. 16, 1978, 53-30275
Int. Cl.^{3} B32B *5/16*
U.S. Cl. 428—403 **3 Claims**

1. A magnetic recording medium having a coercive force greater than 550 Oersteds, a ratio of the coercive force at −196° C. to the coercive force at 25° C. less than 1.8 and having an Fe^{+2} content of less than 1.0 wt.%, comprising: a magnetic powder obtained by dispersing acicular iron oxide in an aqueous solution of a cobalt salt and a reducing agent selected from the group consisting of hydrosulfite, sodium borohydride, hydrazine, hydrazine derivatives, and sodium hypophosphite, said solution being free of a chelating agent; and reacting said cobalt salt with said reducing agent thereby depositing a cobalt compound on the iron oxide base.

4,302,511
POLYAMIDE LAMINATES CONTAINING COPPER SALTS

Harold W. Tuller, Long Valley; Stephen R. Schulze, West Caldwell, and Charles D. Mason, Chatham Township, Morris County, all of N.J., assignors to Allied Corporation, Morris Township, Morris County, N.J.

Filed Dec. 29, 1980, Ser. No. 221,141
Int. Cl.^{3} B32B *27/36*
U.S. Cl. 428—412 **58 Claims**

1. A laminate structure comprised of:
at least one layer of a polyamide containing from 0.001 to 1.0 parts, based on the weight of the polyamide, of a copper cation containing material;
at least one layer of an interpolymer comprised of units derived from ethylene and a comonomer selected from the group consisting of acrylic acid, methacrylic acid, and maleic anhydride; and
wherein at least one polyamide layer is contiguous to at least one interpolymer layer.

45. A laminate structure comprised of:
at least one layer of polyamide containing from 0.001 to 1.0 parts, based on the weight of the polyamide, of a copper cation containing material;
at least one layer comprised of polyethylene terephthalate or a polycarbonate of bisphenol-A, wherein said polymers have been melt blended to provide pendent functional groups selected from the group consisting of carboxylic acid and carbonate; and
wherein at least one polyamide layer is contiguous to at least one polyethylene terephthalate or polycarbonate layer.

4,302,512
PREPARATION FOR THE ABHESIVE COATING OF BAKING TINS, CAKE TINS, FRYING PANS, METAL POTS, AND THE LIKE

Christian Weitemeyer; Vaclav Kropac, both of Essen, and Manfred Priesch, Recklinghausen, all of Fed. Rep. of Germany, assignors to Th. Goldschmidt AG, Essen, Fed. Rep. of Germany

Filed Apr. 21, 1980, Ser. No. 141,810
Claims priority, application United Kingdom, Apr. 24, 1979, 142216/79
Int. Cl.^{3} B32B *9/04*
U.S. Cl. 428—447 **19 Claims**

1. A composition for the abhesive coating of metallic cooking surfaces comprising a heat-curable polysiloxane resin, and based on the resin, 0.05 to 4 weight percent of a polysiloxane compound having the formula

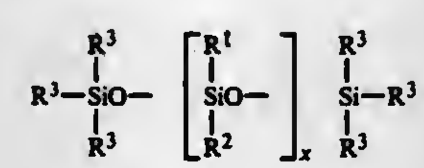

in which
R^1 and R^2 are the same or different and represent a methyl or phenyl residue, with the proviso that at least 80 mole percent of these residues are methyl residues,
R^3 are the same or different and represent a residue or several residues of the group
(a) alkyl residues with 1 to 4 carbon atoms,
(b) phenyl residues,
(c) residues which are capable of reaction with the condensable groups of the curable polysiloxane resin,
wherein at least one residue R^3 has the meaning of (c),
X is 0 or a number greater than 0;
said resin having a reactive group which is capable of reacting with the reactive groups of the polysiloxane compound.

17. An article for cooking having a metal surface with a coating thereon of the cured abhesive coating of claim 1.

4,302,513
ELASTIC TYPING MEDIUM FOR REDUCTION OF MESSAGE SIZE

David E. Russell, 110 Riverside Ave., Jacksonville, Fla. 32202

Filed Aug. 7, 1980, Ser. No. 176,081
Int. Cl.^{3} B41D *7/04;* **B41B** *13/04;* **B41M** *5/00, 1/32*
U.S. Cl. 428—492 **1 Claim**

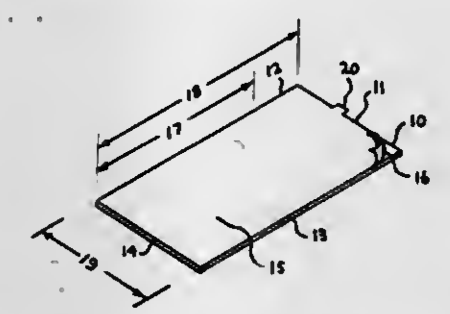

1. In combination, a cardboard or similar semirigid sheet or plate, suitable for insertion in a typewriter roll, and a stretched sheet of rubber, elastomer or other elastic material capable of receiving typing or ink inscriptions mounted on said sheet or plate with a pressure type adhesive in such a manner that the sheet can be manually removed thereby allowing the sheet to return through inherent elastic force to a smaller size presenting typewritten or inked messages and figures of a reduced size.

4,302,514
CONTACT FOR VACUUM INTERRUPTER

Masaru Kato; Hitoshi Takeuchi, and Toshiaki Horiuchi, all of Amagasaki, Japan, assignors to Mitsubishi Denki Kabushiki Kaisha, Tokyo, Japan

Filed May 23, 1979, Ser. No. 41,559
Claims priority, application Japan, May 31, 1978, 53-66192
Int. Cl.^{3} B22F *7/00*
U.S. Cl. 428—569 **6 Claims**

1. A contact for a vacuum circuit interrupter which is prepared by uniformly distributing, in a copper matrix, at least 10 wt.% of a high melting point metal powder having a melting point higher than 1450° C. and selected from the group consisting of Cr, Fe, Co and mixtures thereof, wherein said powder is a mixture of two different particle sizes wherein one particle size has a diameter of (1) 80–300 μm and the other particle size has a diameter of (2) less than 30 μm.

4,302,515
NICKEL BRAZED ARTICLES

Nicholas J. DeCristofaro, Chatham, N.J., and Peter Sexton, Weston, Conn., assignors to Allied Corporation, Morris Township, Morris County, N.J.

Continuation-in-part of Ser. No. 8,370, Feb. 1, 1979, abandoned, which is a continuation-in-part of Ser. No. 912,667, Jun. 5, 1978, Pat. No. 4,148,973, which is a continuation of Ser. No. 751,000, Dec. 15, 1976, abandoned. This application Aug. 20, 1979, Ser. No. 68,266
The portion of the term of this patent subsequent to Apr. 10, 1996, has been disclaimed.
Int. Cl.^{3} B32B *15/04*
U.S. Cl. 428—680 **9 Claims**

1. A brazed metal article, said article having been brazed with a filler metal in the form of a homogenous, ductile brazing foil composed of metastable material having at least 50% glassy structure and a composition consisting essentially of 0 to about 4 atom percent iron, 0 to about 21 atom percent chromium, 0 to about 19 atom percent boron, 0 to about 12 atom percent silicon, 0 to about 22 atom percent phosphorus and the balance essentially nickel and incidental impurities, wherein the composition is such that the total of iron, chromium and nickel ranges from about 76 to 84 atom percent and the total of boron, phosphorus and silicon ranges from about 16 to 24 atom percent.

5. A brazed metal article, said article having been brazed with a filler metal in the form of a homogeneous, ductile brazing foil composed of metastable material having at least 50% glassy structure and a composition consisting essentially of 0 to about 4 atom percent iron, 0 to about 21 atom percent chromium, 0 to about 19 atom percent boron, 0 to about 12 atom percent silicon, 0 to about 22 atom percent phosphorus and the balance essentially nickel and incidental impurities, wherein the composition is such that the total of iron, chromium and nickel ranges from about 76 to 84 atom percent and the total of boron, phosphorus and silicon ranges from about 16 to 24 atom percent, said foil having a thickness less than about 0.0025 inch.

4,302,516
PROCESS FOR GENERATING ELECTRIC POWER USING AIR AND WATER, AND APPARATUS FOR CARRYING OUT THE PROCESS

Otoharu Ishizaka, Tohwa Mansion 1303, 12-12, Hohnan 2-chome, Suginami-ku, Tokyo, Japan

Filed Aug. 15, 1980, Ser. No. 178,630
Claims priority, application Japan, Jan. 25, 1980, 55-6916
Int. Cl.^{3} H01M *16/00*
U.S. Cl. 429—9 **12 Claims**

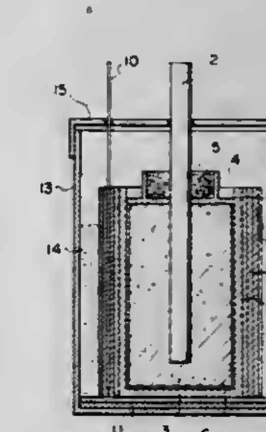

1. A process for generating electric power, which comprises
providing an electrolyte comprising an ammoniacal alkaline aqueous solution containing an ammonium complex having a central metal atom selected from the group consisting of zinc, cobalt, nickel, manganese and silver,
providing a negative pole comprising an electric pile selected from the group consisting of an aluminum-zinc composite, an aluminum-manganese composite, an aluminum-cobalt composite, an aluminum-nickel composite and an aluminum-silver composite,
providing a positive pole comprising a carbon rod, one portion of said carbon rod being surrounded by a member selected from the group consisting of a metal oxide and an organic material which are both oxidizable and reducible, and another portion of said carbon rod being surrounded by an anodic agent,
decomposing said ammonium complex, from said electrolyte, on the surface of said electric pile, to generate nascent hydrogen, and
reacting said nascent hydrogen with oxygen on the surface of said electric pile.

4,302,517
UNITARY SEAL AND COVER SUPPORT GASKET FOR MINIATURE BUTTON CELLS
Theodore P. Dziak, Mentor, Ohio, assignor to Union Carbide Corporation, New York, N.Y.
Filed Jun. 26, 1980, Ser. No. 163,323
Int. Cl.³ H01M *2/08*
U.S. Cl. 429—66 **8 Claims**

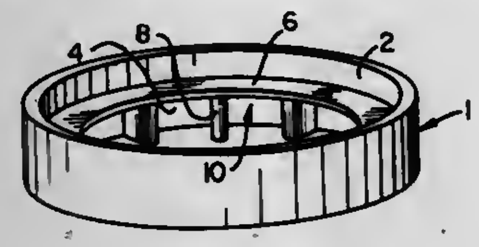

1. A galvanic cell having a negative electrode; a positive electrode; a separator between said negative and said positive electrode; and an electrolyte assembled within a two part conductive housing, the first part of the conductive housing being a cupped container electronically connected to one of the electrodes, the second part of the housing being a cover electronically connected to the other electrode and wherein said first part container and said second part cover are electronically insulated from each other by an insulating sealing gasket disposed between and compressed between the edge of the container and the rim of the cover; the improvement wherein the insulating gasket comprises a first sealing segment disposed and compressed between the rim of the cover and the edge of the container and a second support segment which extends within the container and is substantially parallel to the wall of the container and defines a plurality of spaced-apart openings adapted to accommodate the cell's components or the cell's reaction product formed during discharge.

4,302,518
ELECTROCHEMICAL CELL WITH NEW FAST ION CONDUCTORS
John B. Goodenough, and Koichi Mizuchima, both of c/o United Kingdom Atomic Energy Authority, 11 Charles II St., London SW1Y 4QP, England
Filed Mar. 31, 1980, Ser. No. 135,222
Claims priority, application United Kingdom, Apr. 5, 1979, 11953/79
Int. Cl.³ H01M *4/36*
U.S. Cl. 429—104 **7 Claims**

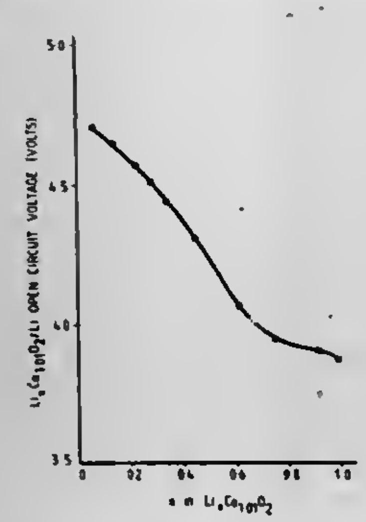

1. An ion conductor, of the formula $A_xM_yO_2$ and having the layers of the α-$NaCrO_2$ structure, in which formula A is Li, Na or K; M is a transition metal; x is less than 1 and y is approximately equal to 1, the A^+ cation vacancies in the ion conductor having been created by A^+ cation extraction.

6. In an electrochemical cell comprising a liquid or solid electrolyte arranged between solid-solution electrodes, the improvement wherein at least one of the solid-solution electrodes is constituted by an ion conductor of the formula $A_xM_yO_2$ as defined in claim 1.

4,302,519
PRODUCTION OF β-ALUMINA CERAMIC TUBES
Robert W. Powers, Schenectady, and Stephan P. Mitoff, Clifton Park, both of N.Y., assignors to General Electric Company, Schenectady, N.Y.
Filed Aug. 25, 1980, Ser. No. 180,600
Int. Cl.³ H01M *2/00;* F27D *3/00*
U.S. Cl. 429—193 **10 Claims**

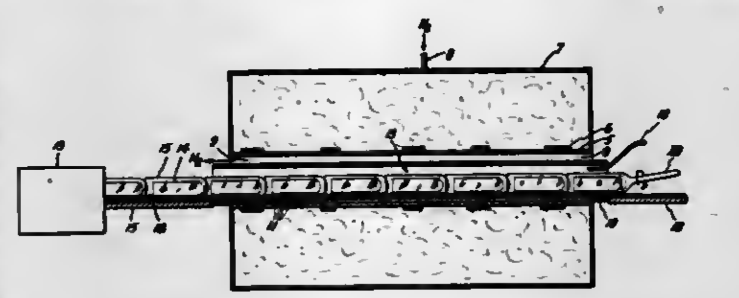

1. A method for producing a sintered polycrystalline ceramic hollow cylindrical tube open at least on one end without significant out-of-roundness which comprises shaping ceramic powder into a cylindrical hollow green tube, providing a cylindrical sagger open at least on one end and having an inner volume at least sufficient to accommodate said green tube substantially horizontally and allow said tube to rotate therein, disposing said green tube substantially horizontally within said sagger, providing a substantially horizontally disposed open-ended firing tube containing a sintering zone, positioning a layer of friction-reducing spheres on the surface of the lower portion of said horizontally-disposed firing tube along the length thereof, providing said firing tube with an atmosphere which has no significant deleterious effect on said tube being sintered, heating said sintering zone to sintering temperature, passing said tube-containing sagger through said firing tube on said spheres, continuously advancing and simultaneously rotating said tube-containing sagger through said firing tube, said advancement and rotation having no significant deleterious effect on said tube therewithin, the rate of rotation being at least one complete revolution of the sagger in an advancing distance equivalent to the outer circumference of the sagger, said sagger being advanced through said sintering zone at a rate appropriate to sinter said tube therewithin.

4,302,520
CATHODE COMPRISING THE REACTION PRODUCT OF BISMUTH, SULFUR AND LEAD OR IRON
William P. Evans, Rocky River, and Violeta Z. Leger, North Olmsted, both of Ohio, assignors to Union Carbide Corporation, New York, N.Y.
Filed Jun. 25, 1980, Ser. No. 162,872
Int. Cl.³ H01M *4/36*
U.S. Cl. 429—194 **16 Claims**

1. A nonaqueous cell comprising an active metal anode, an organic electrolyte solution and a solid cathode material comprising the reaction product of 2 moles of bismuth, 5 moles of sulfur, and 2 moles of iron or lead.

4,302,521
PHOTOSENSITIVE ELEMENT FOR ELECTROPHOTOGRAPHY
Yoshiaki Takei; Yoneko Kimura, and Hiroyuki Nomori, all of Hachioji, Japan, assignors to Konishiroku Photo Industry Co., Ltd., Tokyo, Japan
Filed Jul. 15, 1980, Ser. No. 169,173
Claims priority, application Japan, Jul. 16, 1979, 54-89283
Int. Cl.³ G03G *5/09, 5/14*
U.S. Cl. 430—59 **8 Claims**

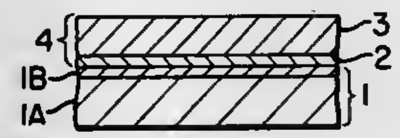

1. A photosensitive element for electrophotography comprising on an electrically conductive support a carrier generating phase and a carrier transport phase containing a P-type organic semiconductor, a poly-N-vinylcarbazole and/or its derivative, a Lewis acid which is not a proton donor, and a Bronsted acid.

4,302,522
METHOD OF MAKING POLYMERIC PHOTOCONDUCTIVE MATERIAL INVOLVES PARTIAL POLYMERIZATION STEP
John L. Garnett, 29 Arabella St., Longueville, New South Wales, and John D. Rock, 12 Kara St., Lane Cove, New South Wales, both of Australia (2066)
Continuation of Ser. No. 940,195, Sep. 7, 1978, abandoned, which is a continuation of Ser. No. 731,452, Oct. 12, 1976, abandoned, which is a continuation of Ser. No. 541,947, Jan. 17, 1975, abandoned. This application Apr. 28, 1980, Ser. No. 144,260
Claims priority, application Australia, Jan. 21, 1974, PB6318
Int. Cl.³ G03G *5/07*
U.S. Cl. 430—133 **7 Claims**

1. A method of rendering a surface of a substrate photoconductive comprising the steps of:

(a) partially, but incompletely, polymerizing, by means of ultraviolet or ionizing radiation, one or more monomers selected from the group having the formula

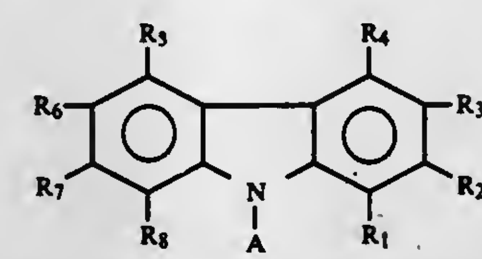

wherein A is a vinyl group, a hydrogen atom or an alkyl group containing up to 7 carbon atoms and R1, R2, R3, R4, R5, R6, R7, and R8 are each selected from the group consisting of a hydrogen atom, a halogen atom and a vinyl group, with the proviso that when A is a hydrogen atom or a lower alkyl group containing up to 7 carbon atoms, at least one of R1, R2, R3, R4, R5, R6, R7, R8 is a vinyl group;

(b) applying to the surface of a substrate selected from the group consisting of a metal, a plastic and a cellulosic material a single layer of the partially polymerized material formed in step (a); and

(c) completing polymerization in situ, by means of ultraviolet or ionizing radiation, of the material which was only partially polymerized in step (a).

4,302,523
MAGNETIC RECORDING ELEMENTS CONTAINING TRANSPARENT RECORDING LAYER
Roger G. L. Audran, Villebon-sur-Yvette-Palaiseau, and Albert P. Huguenard, Le Plessis Trevise, both of France, assignors to Eastman Kodak Company, Rochester, N.Y.
Division of Ser. No. 881,968, Feb. 27, 1978, Pat. No. 4,279,845. This application Nov. 14, 1979, Ser. No. 94,145
Claims priority, application France, Mar. 2, 1977, 77 06066
Int. Cl.³ G03C *7/24;* G11B *5/70*
U.S. Cl. 430—140 **10 Claims**

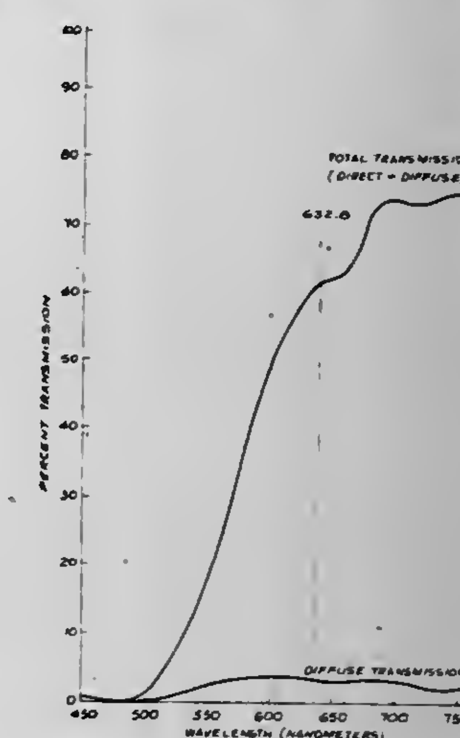

1. A magnetic recording element comprising a support and a transparent magnetic recording layer having a thickness up to about 5 microns,

said layer containing acicular, magnetizable particles having an average width of less than about 0.06 micron and an average length up to about 1 micron,

said particles being ferro- or ferri-magnetic particles having a transmission of at least 10 percent for visible light having a wavelength of 632.8 nm,

said particles being substantially homogeneously dispersed in a medium comprising a binder and having a refractive index which is substantially the same throughout the thickness of said layer,

the concentration of said binder being at least about 10 parts per 100 parts by weight, of said particles; up to about 30 parts by weight, for particles having an average length of at least about 0.06 micron and up to about 40 parts, per 100 parts, by weight, for particles having an average length of less than about 0.06 micron,

said magnetic recording layer having a total transmission of at least 20 percent for visible light having a wavelength of 632.8 nm and a ratio of direct transmission to total transmission at said wavelength of at least 50 percent.

4,302,524
VESICULAR FILM ELEMENTS
William L. Mandella, Boonton, and James R. Kuszewski, Warren, both of N.J., assignors to GAF Corporation, New York, N.Y.
Filed Mar. 19, 1980, Ser. No. 131,350
Int. Cl.³ G03C *1/60, 1/76*
U.S. Cl. 430—155 **4 Claims**

1. An imaging film element for formation of a vesicular image, comprising a film support and coated on said support, a composition comprising a binder and an imaging amount of a photosensitive vesiculating agent capable of generating nitrogen gas upon exposure to radiation dispersed therein, said binder being a substantially branched film-forming epoxy resin

copolymer of a bis-glycidyl ether, a sulfur containing diphenol of the formula

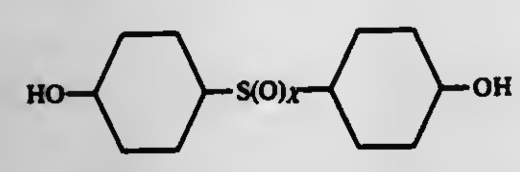

wherein X is 1 or 2.

4,302,525

NOVEL PHOTOSENSITIVE ELEMENTS AND METHOD OF STABILIZING SAID ELEMENTS

T. Nelson Baker, III, Sudbury, and Bernard Zuckerman, Framingham, both of Mass., assignors to Polaroid Corporation, Cambridge, Mass.

Continuation-in-part of Ser. No. 918,841, Jun. 26, 1978. This application Feb. 15, 1980, Ser. No. 121,799

Int. Cl.³ G03C *1/02, 5/00*

U.S. Cl. 430—217 **34 Claims**

1. A method for stabilizing a photosensitive silver halide emulsion for use in a photographic duffusion transfer process which comprises the following steps:

(a) spectrally sensitizing the silver halide grains with at least a first spectral sensitizing dye;

(b) lowering the pH of the sensitized emulsion from a first pH of the emulsion subsequent to chemical ripening in excess of about 6 to a second pH of about 5.5 to about 4.0 and/or increasing the Br ion/Ag ratio to at least 5 mg Br/gAg; and, subsequent to steps (a) and (b),

(c) adding to said emulsion about 5 to 80 mg/gAg of a stabilizer selected from the group consisting of an hydroxy triazaindene, an amino triazaindene, an hydroxy tetrazaindene, an amino tetrazaindene, an hydroxy pentazaindene and an amino pentazaindene.

4,302,526

MATERIALS FOR SILVER COMPLEX DIFFUSION TRANSFER PROCESS

Isao Kohmura; Tamotsu Iwata, and Shozi Oka, all of Nagaokakyo, Japan, assignors to Mitsubishi Paper Mills, Ltd., Tokyo, Japan

Filed Nov. 6, 1979, Ser. No. 91,754

Claims priority, application Japan, Nov. 11, 1978, 53-139270

Int. Cl.³ G03C *1/48, 1/84, 5/54, 1/76*

U.S. Cl. 430—227 **7 Claims**

1. A photographic product which comprises in combination, a negative material for silver complex diffusion transfer process which has silver halide emulsion layer which is developed in contact with an image receiving material having an image receiving layer the improvement comprising (a) in said silver halide emulsion layer the weight ratio of hydrophilic colloid substance to silver halide in terms of silver nitrate being 2 or less and (b) an undercoat layer of hydrophilic colloid substance provided on a support and said silver halide emulsion layer provided on said undercoat layer, the weight ratio of hydrophilic colloid substance in said undercoat layer to hydrophilic colloid substance in said silver halide emulsion layer being at least 3, a processing solution which is an aqueous alkaline solution containing a silver complex forming agent and an image receiving material containing physical development nuclei.

4,302,527

PHOTOREACTIVE COMPOSITIONS COMPRISING A LIGHT SENSITIVE COMPOUND AND ANOTHER COMPOUND WITH REACTIVE SITE

Robert C. Daly, Rochester; Danny R. Thompson, Fairport, and Samir Y. Farid, Rochester, all of N.Y., assignors to Eastman Kodak Company, Rochester, N.Y.

Filed Aug. 21, 1980, Ser. No. 180,211

Int. Cl.³ G03C *1/68*

U.S. Cl. 430—270 **9 Claims**

1. A photoreactable composition comprising, in admixture, a light-sensitive compound having the structural formula

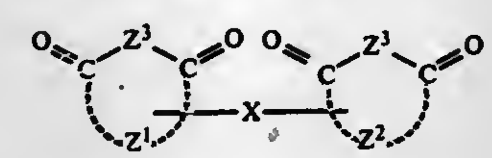

wherein

Z^1 and Z^2 are each independently the number of non-metallic atoms necessary to complete 1, 2, 3, or 4 unsaturated carbocyclic or heterocyclic rings of from 6 to 18 ring atoms;

Z^3 is either a carbon-to-carbon bond or vinylene;

and X is a linking group;

and a compound containing at least one reactive site capable of photoreaction with said light-sensitive compound.

4,302,528

PROCESS FOR PRODUCING PHOTO-CURABLE COMPOSITE MATERIALS USEFUL FOR PREPARING STENCILS

Takezo Sano, Takatsuki; Haruo Inoue, Kobe, and Akihiro Furuta, Takatsuki, all of Japan, assignors to Sumitomo Chemical Company, Limited, Osaka, Japan

Filed Jul. 11, 1979, Ser. No. 56,640

Claims priority, application Japan, Jul. 12, 1978, 53-85393

Int. Cl.³ G03C *5/00, 1/78*

U.S. Cl. 430—273 **3 Claims**

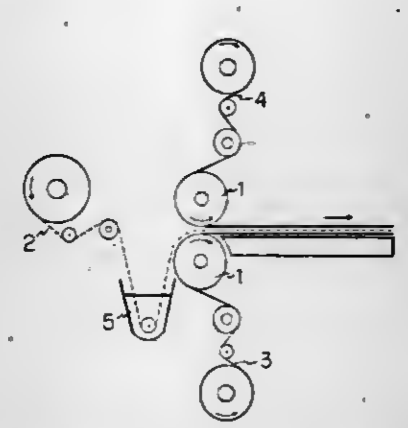

1. A continuous process for producing a photo-curable composite material useful for preparing stencils which comprises applying a liquid photo-curable resin onto a screen material having a thickness of about 20 microns to 1 mm., by passing said screen as a continuously fed sheet of stock material through a vessel containing said liquid photo-curable resin, introducing said screen material between two films such that the films hold the resin and screen material to produce a layered configuration, at least one of said films having phototransmitting properties capable of transmitting actinic radiation and a thickness of about 5 to 50 microns, the remaining film having a thickness of about 10 to 500 microns, and passing said resulting layered configuration through transport means defining a gap having a size of about 50 microns to 10 mm to produce said composite material having a fixed thickness.

4,302,529

PROCESS FOR DEVELOPING A POSITIVE ELECTRON RESIST

Juey H. Lai, Burnsville, Minn., assignor to Honeywell Inc., Minneapolis, Minn.

Filed Jan. 8, 1980, Ser. No. 110,295

Int. Cl.³ G03C *5/24*

U.S. Cl. 430—296 **16 Claims**

1. A method of developing a positive electron resist for delineating a desired integrated circuit pattern upon a circuit substrate wherein said positive resist is a copolymer film of poly (methyl alpha-chloroacrylate-comethacrylonitrile) having a thickness of about 0.3 to 1.0 microns and which has been exposed to sufficient ionizing radiation comprising the step of developing the exposed regions of the resist film to the substrate by means of a developer selected from the group consisting of benzonitrile, a mixture of benzonitrile and methyl cellosolve, and a mixture of benzonitrile and methyl ethyl ketone.

4,302,530

METHOD FOR MAKING SUBSTANCE-SENSITIVE ELECTRICAL STRUCTURES BY PROCESSING SUBSTANCE-SENSITIVE PHOTORESIST MATERIAL

Jay N. Zemel, Jenkintown, Pa., assignor to University of Pennsylvania, Philadelphia, Pa.

Filed Dec. 8, 1977, Ser. No. 858,906

Int. Cl.³ G01N *27/00, 31/06*

U.S. Cl. 430—311 **6 Claims**

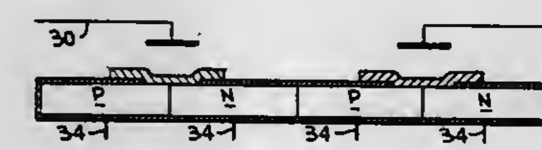

1. A method of forming a substance-sensitive membrane on a structure for providing an electrical indication of the concentration of at least a selected substance, said membrane formed on said structure by the method comprising the steps of:

providing a layer of substance-sensitive photoresist material over said structure; and

processing said photoresist to form a substance-sensitive membrane on said structure.

4,302,531

METHOD OF MANUFACTURE OF PHOTODIODE

John T. Cox, Alexandria, Va.; Michael B. Garber, Columbia, S.C.; Marilyn A. Jasper, Springfield, and Randolph E. Longshore, Alexandria, both of Va., assignors to The United States of America as represented by the Secretary of the Army, Washington, D.C.

Division of Ser. No. 893,847, Apr. 6, 1978, Pat. No. 4,170,781. This application Apr. 16, 1979, Ser. No. 30,506

Int. Cl.³ H01L *27/14, 31/18*

U.S. Cl. 430—317 **7 Claims**

1. The method of forming one or more photodiodes comprising the steps of:

placing a clean chip of lead-tin-telluride in a vacuum chamber;

reducing the pressure in said chamber to approximately 10^{-6} torr;

prebaking the chip;

depositing a thin layer of lead on at least one selected portion of said chip;

depositing a nonconducting evaporation inhibiting layer of SiO over said lead layer which is compatible with processing temperatures of at least 400° C.;

diffusing said layer of lead into said chip at a temperature of approximately 400° C. for approximately 20 minutes;

removing said chip from said vacuum chamber;

coating said chip with a dielectric layer of insulating material;

removing only that part of said non-conducting layer of SiO and said dielectric layer of insulating material which cover a surface area within each said selected portion to expose a portion of said surface area;

returning said chip to said chamber;

reducing the chamber pressure again to 10^{-6} torr; and

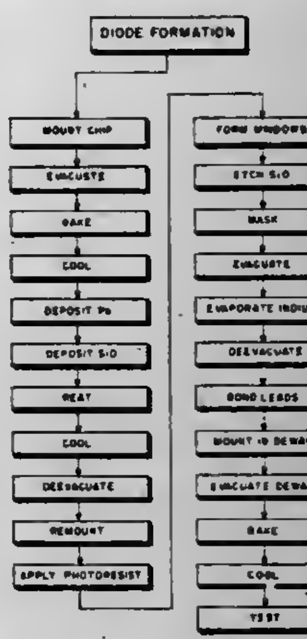

depositing a lead-out structure of individual indium contacts over and through said nonconducting layer with a separate contact connected to said exposed area of each selected portion of said chip.

4,302,532

ORTHODONTIC BRACKET WITH PROTECTIVE INSERT OR LINER

Melvin Wallshein, 8645 Bay Pkwy., Brooklyn, N.Y. 11214

Filed Jun. 23, 1976, Ser. No. 698,915

Int. Cl.³ A61C *7/00*

U.S. Cl. 433—8 **34 Claims**

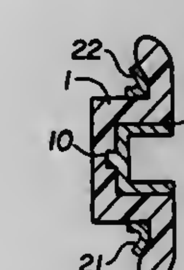

1. An orthodontic bracket assembly comprising:

a non-metallic bracket having an opening therein for receiving an arch wire, or the like; and

a hard liner on at least a portion of the surface of said non-metallic bracket defining said opening for protecting said non-metallic bracket from damage due to forces applied by an arch wire, or the like, received therein, said liner being fabricated of a material harder than the material of said bracket;

said liner having a raised peak portion interior of the edges of said opening which is adapted to serve as a tilting surface for an arch wire or the like, said liner being fabricated of two pieces which meet generally at said peak portion.

4,302,533
NOVEL ASSAYS FOR INTERFERON
Michel Revel, Rehovot; Adi Kimchi, Raanana; Lester Shulman, and David Wallach, both of Rehovot, all of Israel, assignors to Yeda Research & Development Co. Ltd., Rehovot, Israel
Filed Apr. 11, 1980, Ser. No. 139,697
Claims priority, application Israel, Apr. 22, 1979, 57108
Int. Cl.³ C12Q *1/02, 1/68*
U.S. Cl. 435—4 **5 Claims**

1. An assay for the quantitative determination of interferon, without the necessity of viral infection, consisting essentially of the steps of extracting a cell previously exposed to said interferon by means of a non-ionic surfactant, and determining in such extract the quantity of protein kinase (PK-i), oligo-isoadenylate synthetase, or phosphodiesterase, the content of which in said cell is a function of the quantity of interferon to which said cell has been previously exposed.

4,302,534
CHEMILUMINESCENT ENZYME IMMUNOASSAY
Mirjam Halmann, Rehovot; Baruch Velan, Rishon Lezion, and Tamar Seri, Cholon, all of Israel, assignors to Israel Institute for Biological Research, Ness Ziona, Israel
Filed Mar. 7, 1978, Ser. No. 884,104
Claims priority, application Israel, Mar. 16, 1977, 51668
Int. Cl.³ G01N *33/54;* C12Q *1/68;* C12M *1/34*
U.S. Cl. 435—6 **3 Claims**

1. An assay for the quantitative determination of entities selected from the group consisting of immunogens and antibodies, which comprises:

a. contacting and reacting immunologically a sample of the immunogen or of the antibody to be determined with, respectively, an anti immunogen-peroxidase conjugate or with an antigen-peroxidase conjugate specific to said entity,

b. removing excess of antigen peroxidase conjugate or immunogen peroxidase conjugate,

c. adding a phenolic compound selected from the group consisting of pyrogallol, resorcinol, phloroglucinol and hydroxyhydroquinone and hydrogen peroxide, and

d. measuring the light emitted and thus establishing the quantity of the entity to be determined.

4,302,535
ASSAY FOR MUTAGENESIS IN HETEROZYGOUS DIPLOID HUMAN LYMPHOBLASTS
Thomas R. Skopek, Somerville; Howard L. Liber, Brookline; Bruce W. Penman; William G. Thilly, both of Cambridge, and Henry Hoppe, IV, Arlington, all of Mass., assignors to Massachusetts Institute of Technology, Cambridge, Mass.
Filed Sep. 27, 1979, Ser. No. 79,549
Int. Cl.³ C12Q *1/68, 1/29;* C12N *5/02*
U.S. Cl. 435—6 **7 Claims**

1. An assay for determining mutagenesis, comprising:

a. exposing a culture of human diploid or near-diploid cells capable of continuous division in suspension culture, said cells being heterozygotes having only one active gene for an enzyme for converting a pyrimidine analog to a toxic material for said cells to an agent to be tested for its mutagenic effects on said cells;

b. incubating exposed cells for a number of generations to allow full expression of phenotypically-developed resistance to a pyrimidine analog which acts as a substrate for said enzyme and is normally toxic to said cells;

c. culturing cells having the full phenotypically developed resistance both in the presence of and without a pyrimidine analog which is toxic to non-mutant cells; and,

d. comparing the amount of mutant cells to the amount of non-mutant cells to thereby determine the degree of induced mutagenesis.

4,302,536
COLORIMETRIC IMMUNOASSAY PROCESS
Robert W. Longenecker, 6860 SW 113th St., Miami, Fla. 33156
Filed Aug. 15, 1978, Ser. No. 933,903
Int. Cl.³ C12N *9/96;* G01N *33/54, 31/00*
U.S. Cl. 435—7 **13 Claims**

1. A method for the qualitative and quantitative determination of antigenic materials in biological fluids and cells, said method comprising the steps of:

(a) providing a sample containing a biological fluid or cell material to be tested for given antigenic material;

(b) adding to said sample a colorimetric and immunoassay reagent, said reagent comprising an adduct of (i) an antibody for said antigenic material and (ii) a chromoprotein selected from the group consisting of ferritin, transferrin, cytochrome c, and ceruloplasmin, which chromoprotein is capable of being chemically coupled to said antibody by covalent bonding, said chromoprotein imparting to said adduct a characteristic absorbance spectrum in the visible light wavelength range;

(c) reacting said colorimetric immunoassay reagent with said antigenic material to form a reagent-antigen complex;

(d) separating the reaction mixture of step (c) into a reagent-antigen complex-containing fraction and an unreacted reagent-containing fraction;

(e) measuring the absorbance of a solution of one of said fractions at the characteristic absorbance wavelength of said adduct; and

(f) comparing the absorbance values measured in step (e) with an external standard sample of known adduct concentration.

4,302,537
REAGENT AND METHOD FOR THE DETERMINATION OF PEROXIDASE
Karl-Dietrich Gündermann, Clausthal-Zellerfeld; Karl Wulff, Weilheim; Fritz Staehler, Tutzing, and Hans-Ralf Linke, Raisting, all of Fed. Rep. of Germany, assignors to Boehringer Mannheim GmbH, Mannheim-Waldhof, Fed. Rep. of Germany
Filed Feb. 11, 1980, Ser. No. 120,191
Claims priority, application Fed. Rep. of Germany, Feb. 21, 1979, 2906732
Int. Cl.³ C12Q *1/66*
U.S. Cl. 435—7 **20 Claims**

1. Method for the determination of peroxidase in a sample, which method comprises contacting the sample with a peroxy compound selected from hydrogen peroxide or an organic hydroperoxide and 7-dimethyl-aminonaphthaline-1,2-dicarboxylic acid hydrozine of the formula

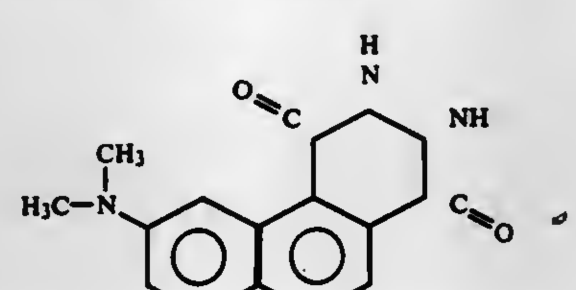

and measuring the emission of light as a measure of the peroxidase initially present in the sample.

4,302,538
BUFFER SYSTEM IN AN ANTI-THROMBIN III TEST
Stephen M. Autenrieth, Bernardsville, and Raymond P. Zolton, Somerville, both of N.J., assignors to Ortho Diagnostics Inc., Raritan, N.J.
Continuation of Ser. No. 890,734, Mar. 27, 1978, abandoned. This application May 8, 1980, Ser. No. 147,810
Int. Cl.³ C12Q *1/56*
U.S. Cl. 435—13 **12 Claims**

1. In the method for determining the anti-thrombin III level of an anti-thrombin III source which includes the steps of treating the source with thrombin whereby the thrombin is wholly or partially neutralized, treating the resulting mixtures with fibrinogen and measuring the clotting time of the fibrinogen treated mixture, the improvement which comprises conducting the thrombin-anti-thrombin III treatment step at a pH of between 7.9 to 8.5 maintained by a buffer system comprising a buffering amount of:

N-2-hydroxyethylpiperazine-N'-2-ethane sulfonic acid, N-2-hydroxyethylpiperazine-N'-3-propane-sulfonic acid, N-tris-(hydroxymethyl)-methyl-2-amino-ethanesulfonic acid, N-tris-(hydroxymethyl)-methyl-glycine, or N,N-bis(2-hydroxymethyl)-glycine or a salt thereof.

4,302,539
NOVEL SINGLE CELL PROTEIN SUBSTRATE
J. Gustav Schulz, Pittsburgh, and Pamela M. Bunting, Cheswick, both of Pa., assignors to Gulf Research & Development Company, Pittsburgh, Pa.
Continuation-in-part of Ser. No. 77,247, Sep. 19, 1979, abandoned. This application Jun. 30, 1980, Ser. No. 164,392
Int. Cl.³ C12P *21/00*
U.S. Cl. 435—68 **4 Claims**

1. In the process for manufacture of single cell protein comprising bacteria and fungus by growing a microorganism on fossil fuel carbon source the improvement which comprises using as the carbon source an oxidation-nitration product of lignite which is manufactured by subjecting a slurry of lignite in aqueous nitric acid to a temperature of from about 15° C. to about 200° C. for about 0.5 to about 15 hours, separating the solids, extracting the resulting solids with acetone, recovering the acetone-insoluble fraction, and dissolving the acetone-insoluble solid in base and neutralizing the solution to between pH 6.5 and pH 8.0.

4,302,540
PROCESS OF PRODUCING OPTICALLY ACTIVE CEPHALOSPORIN ANALOGS BY ENZYME SELECTIVE DEACYLATION
Tadashi Hirata, Yokohama; Yukio Hashimoto, Yamato; Takehiro Ogasa, Machida; Shigeru Kobayashi, Machida; Akira Sato, Machida; Kiyoshi Sato, Shizuoka, and Seigo Takasawa, Hadano, all of Japan, assignors to Kyowa Hakko Kogyo Co., Ltd., Tokyo, Japan
Filed Oct. 24, 1980, Ser. No. 200,551
Claims priority, application Japan, Oct. 25, 1979, 54-136986; Apr. 26, 1980, 55-55618
Int. Cl.³ C12P *17/18;* C07B *19/02*
U.S. Cl. 435—119 **4 Claims**

1. A process for producing optically active compounds represented by the formula:

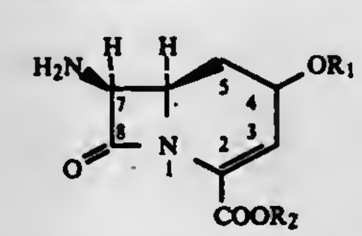

wherein R_1 represents a hydrogen, a lower alkyl group or a lower acyl group and R_2 represents a hydrogen or a protective group of carboxylic acid, which comprises reacting a compound represented by the formula

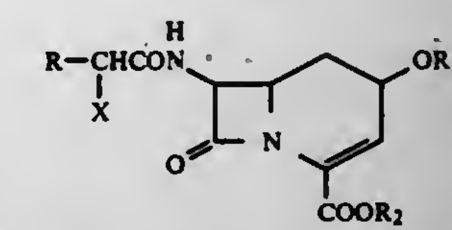

wherein R represents a substituted or unsubstituted unsaturated six-membered carbocycle or a substituted or unsubstituted heterocycle, X represents a hydrogen, an amino group, a hydroxy group or a lower alkyl group, R_1 and R_2 have the same significance as defined above, and the hydrogens at the 6- and 7-positions have cis configuration with an enzyme capable of selective optical deacylation and thereafter recovering said optically active compounds.

4,302,541
PROCESS OF PRODUCING OPTICALLY ACTIVE CEPHALOSPORIN ANALOGS BY ENZYME SELECTIVE DEACYLATION
Tadashi Hirata, Yokohama; Yukio Hashimoto, Yamato; Ikuo Matsukuma, Yokkaichi; Shigeo Yoshiie, Sakai, and Seigo Takasawa, Hadano, all of Japan, assignors to Kyowa Hakko Kogyo Co., Ltd., Tokyo, Japan
Filed Nov. 13, 1980, Ser. No. 206,639
Claims priority, application Japan, Nov. 14, 1979, 54-146488
Int. Cl.³ C12P *17/18;* C07B *19/02*
U.S. Cl. 435—119 **3 Claims**

1. A process for producing optically active compound represented by the general formula (I)

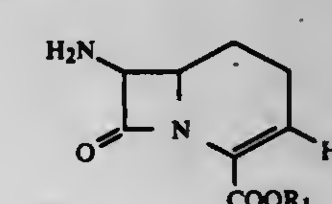

(I)

wherein R_1 represents a hydrogen or a protective group of carboxylic acid, Hal represents a halogen atom, and the hydrogens at the 6- and 7-positions have cis configuration and salts thereof, which comprises reacting a compound represented by the formula (III)

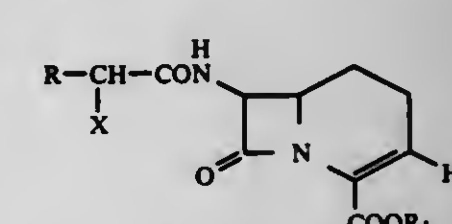

(III)

wherein R represents a substituted or unsubstituted, saturated or unsaturated six-membered carbocyclic or five-membered heterocyclic group, wherein the substituent represents a hydroxy group, a halogen atom, a nitro group or a methanesulfonamide group, X represents a hydrogen, an amino group, a hydroxy group or a lower alkyl group, R_1 and Hal have the same significance as defined above, and the hydrogens at the 6- and 7-positions have cis configuration with an enzyme capable of optically selective deacylation and thereafter recovering said optically active compound.

4,302,542

FERMENTATION WITH THERMOPHILIC MIXED CULTURES

Donald O. Hitzman, Bartlesville, Okla., assignor to Phillips Petroleum Co., Bartlesville, Okla.

Continuation of Ser. No. 698,251, Jun. 21, 1976, abandoned. This application Dec. 1, 1977, Ser. No. 856,545

Int. Cl.³ C12N *1/32, 1/20;* **C12R** *1/01;* **A23J** *1/00*

U.S. Cl. 435—247 **27 Claims**

1. A method of producing a single cell protein material which comprises culturing a mixed culture of thermophilic bacteria species microorganisms NRRL B-8158 in aqueous medium employing an oxygenated hydrocarbon as carbon and energy source under aerobic fermentation conditions at a fermentation temperature of at least about 45° C., and recovering the resulting microorganisms as a single cell protein material.

17. The protein material prepared by the process which comprises culturing a mixed culture of bacterial microorganisms species NRRL B-8158 in an aqueous medium employing an oxygenated hydrocarbon as carbon and energy source under aerobic fermentation conditions at a fermentation temperature of at least about 45° C. and recovering from the resulting single cell microorganisms a protein material.

4,302,543

PROCESS AND APPARATUS FOR PRODUCING STARCH-CONTAINING FEEDSTOCK HYDROLYSATES FOR ALCOHOLIC FERMENTATION

Negmat E. Benyaev, ulitsa I Parkovaya, 43, Moskovskaya oblast, Mytischi; Razmik A. Boskanian, ulitsa Butlerova, 18, kv. 36, Moscow; Viktor I. Yarovenko, ulitsa Panfilova, 18a, kv, 16, Moscow; Jury N. Durbrov, ulitsa M. Dzhalilya, 34, korpus 2, kv. 278, Moscow; Boris A. Ustinnikov, 6 Parkovaya ulitsa, 13, kv. 92, Moscow; Ljudmila V. Babichenko, Teply Stan, 18, kv. 36, Moscow; Mikhail D. Vakulenko, ulitsa Jun. Lenintsev, 79, korpus 3, kv. 265, Moscow; Nikolai A. Kramarsky, ulitsa Khalturinskaya, 11, kv. 43, Moscow; Vitaly F. Shamrin, ulitsa Tambovskaya, 207, kv. 11; Sergei I. Karaichev, ulitsa Tambovskaya, 207, kv. 9, both of Michurinsk Tambovskoi oblasti; Boris V. Efremov, Sudostroitelnaya, 7, korpus 2, kv. 170, Moscow, and Tatyana N. Lantsetova, ulitsa Bobruiskaya, 12, kv. 74, Moscow, all of U.S.S.R.

Filed Feb. 27, 1980, Ser. No. 125,767

Int. Cl.³ C12P *7/06*

U.S. Cl. 435—161 **1 Claim**

1. A process of producing hydrolysates of a starch-containing feedstock for alcoholic fermentation, which comprises disintegrating a starch-containing feedstock to a particle size of 1 to 3 mm;

extruding the disintegrated feedstock at a temperature of from 150° to 300° C. under a pressure of 2.10^5 to 2.10^8 Pa;

mixing the resulting extrudate with an aqueous enzymatic solution in a ratio of 1:3–4;

subjecting the resulting mixture to fermentative hydrolysis for 3 to 60 minutes under the action of opposite-direction vortical streams of said mixture created by opposite-direction vortical streams of said mixture created by opposite-direction vortical streams formed by discs rotating at a rotation speed of 1,000 to 6,000 r.p.m. with changing of their direction.

4,302,544

ASPOROGENOUS MUTANT OF *B. SUBTILIS* FOR USE AS HOST COMPONENT OF HV1 SYSTEM

Frank E. Young, Pittsford; Gary A. Wilson, and Susan L. Mottice, both of Rochester, all of N.Y., assignors to University of Rochester, New York, N.Y.

Filed Oct. 15, 1979, Ser. No. 84,595

Int. Cl.³ C12N *1/20, 15/00*

U.S. Cl. 435—253 **1 Claim**

1. A biologically pure culture of asporgenous *B. subtilis* RUB 331 (ATCC 31578) suitable for use as a host component in a host-vector system having the following characteristics: translucent phenotype on tryptose blood agar plates but not on Spizizen's minimal agar supplemented with glucose; a frequency of transformation with linear or covalently closed circular DNA of up to 2 percent; lyses in a complex medium; viability reduced to 0 CFU/ml after drying at room temperature for about 12 hours and a frequency of reversion to sporeformers of less than 10^{-7}, under conditions of minimal aeration.

4,302,545

APPARATUS FOR CHEMICAL FROTH SUPPRESSION IN A FERMENTER

Jury V. Redikultsev, mikroraion "G", 19, kv. 113; Leonid A. Litvinenko, mikroraion "AB", 8, kv. 74, and Valery A. Sedov, mikroraion "G", 1, kv. 15, all of, Moskovskaya oblast, Puschino, U.S.S.R.

Filed Jan. 21, 1980, Ser. No. 113,475

Claims priority, application U.S.S.R., Jan. 19, 1979, 2706012

Int. Cl.³ C12M *1/36*

U.S. Cl. 435—289 **2 Claims**

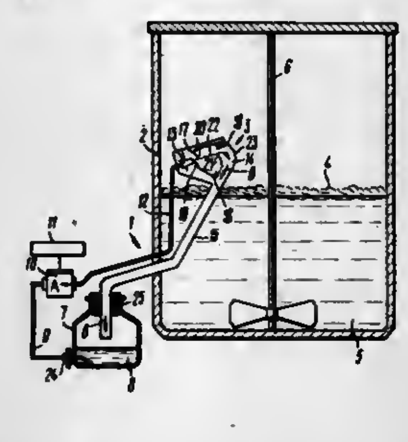

1. An apparatus for chemical froth suppression in a fermenter, comprising:

a vessel containing a chemical froth suppressor;

a take-off pipe connected to said vessel;

a pneumatic pump connected to said take-off pipe for taking-off said froth suppressor from said vessel along said take-off pipe;

a pneumatic pulse generator pneumatically coupled to said pneumatic pump to drive said pump continuously during operation of said fermenter; and

a froth sensor installed in said fermenter for tracing the froth which is formed therein as a result of a process occurring in the fermenter, said froth sensor comprising a throttle installed downstream from said pneumatic pump in the direction of flow of said chemical froth suppressor and connected thereto, a nozzle having an outlet orifice from which a jet of said froth suppressor flows and which is installed downstream of said throttle, and in fluid connection therewith, in the direction of flow of said chemical froth suppressor and a hollow chamber accommodating said throttle and nozzle, whereby the jet of froth suppressor flowing from said nozzle traverses said hollow chamber when no froth is present, and contacts said froth, when froth is present within the hollow chamber, and having a drain pipe at the opposite side of said hollow chamber, said drain pipe being connected to said chemical froth suppressor and having a through opening formed by first, second, and third walls, a first port in the first wall of said through opening, which is congruent to and coaxial with said outlet orifice of said nozzle, a second port in the third wall of said through opening, which is congruent to and coaxial with the first port, said jet of said froth suppressor passing through said ports after leaving said nozzle to fly past said through opening and into said hollow chamber, having a concave wall arranged opposite to said second port and reflecting said jet of said froth suppressor and removing it through said drain pipe to said vessel containing said chemical froth suppressor thereby forming a closed circuit for circulation of said chemical froth suppressor when froth is below the level of the jet in said hollow chamber.

4,302,546

ORGANIC WASTE CONVERTER

Harold E. Schlichting, Jr., 151 S. Ridge St., Port Sanilac, Mich. 48469

Filed May 19, 1978, Ser. No. 907,582

Int. Cl.³ C12M *1/02, 1/06;* **B01J** *19/18;* **C05F** *11/00*

U.S. Cl. 435—315 **2 Claims**

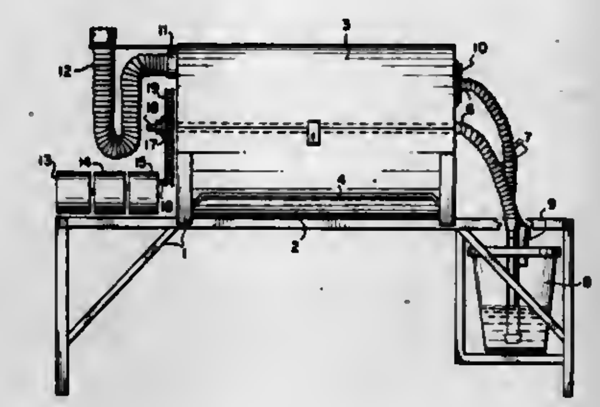

1. A combined composting and drying apparatus with very low energy requirements for biologically converting semi-solid organic wastes especially agricultural wastes, without additives such as bacteria or microorganism cultures or synthetic chemicals, into a high quality soil conditioner and animal feed supplement within 48–72 hours and providing sources of heat, carbon dioxide and ammonia, comprising:

a. A heat-insulated, essentially airtight single chamber with a corrosion proof stirring system for agitating said organic wastes during the step of digesting and the resulting compost during the step of drying thereof;

b. Means to rotate said stirring system at two or less rotations per minute during said digesting step and at 35 or more rotations per minute during said drying step;

c. Means to draw air through said chamber during said digesting step and to scrub the exhausted air, thus recovering the resulting gases such as ammonia and carbon dioxide;

d. Means to reverse air flow within said chamber and to provide heat therein comprising a blower with a heating element operative to provide heated air to fluff and dry the finished product during said drying step; and

e. a heat exchanger located within the chamber for absorbing heat produced during said digesting step.

4,302,547

NOVEL SOLVENTS FOR THE CATALYTIC PROCESS FOR PRODUCING POLYHYDRIC ALCOHOLS

Paul W. Hart, Alum Creek, W. Va., assignor to Union Carbide Corporation, New York, N.Y.

Filed Jun. 30, 1980, Ser. No. 163,973

Int. Cl.³ C07C *27/06*

U.S. Cl. 518—701 **10 Claims**

1. A process for producing polyhydric alcohol(s) which comprises reacting hydrogen and oxides of carbon in a solvent comprising a cyclic urea in the presence of a rhodium carbonyl complex at a temperature of between about 100° C. and 375° C. correlated with a pressure of between about 500 psia and 50,000 psia sufficient to produce said polyhydric alcohol(s).

4,302,548

PRODUCTION OF ION EXCHANGE RESINS, THE RESINS SO PRODUCED AND ION EXCHANGE PROCESSES USING THEM

James S. Clovis, Morrisville, Pa., assignor to Rohm and Haas Company, Philadelphia, Pa.

Filed May 22, 1980, Ser. No. 152,240

Int. Cl.³ B01J *47/04*

U.S. Cl. 521—28 **9 Claims**

1. An ion exchange resin bed containing a mixture of particles bearing differing functional ion exchange groups which comprises particles prepared by functionalizing fractions of a single batch of precursor ion exchange resin copolymer particles or particles bearing an intermediate functional group or precursor thereof, segregated into said fractions on the basis of the differing hydraulic densities of the different sized particles contained in the single batch of precursor particles of substantial particle size distribution, which ion exchange particles when hydraulically classified form vertically deposed essentially discrete zones corresponding to the separately functionalized fractions wherein at least two of said zones have different ion exchange functionality.

4,302,549

METHOD OF PREPARING EXPANDABLE POLYSTYRENE

Richard P. Crowley, 65 East India Row, Boston, Mass. 02110

Filed Apr. 18, 1980, Ser. No. 141,632

Int. Cl.³ C12P *33/14;* **F27B** *14/00;* **C04B** *33/32*

U.S. Cl. 521—57 **15 Claims**

1. In a process for the expansion of an expandable, polymeric, bead material by exposing the bead material to steam at an elevated temperature, to effect the expansion of the bead material into a polymeric, free-flowing foam, particulate, bead material, while tumbling the bead material during expansion to prevent fusion, the improvement which comprises:

employing as a lubricant for the bead material a steam-degradable lubricant material which, on exposure to the steam and prior to the end of the expansion of the bead material, is substantially diminished in lubricant characteristics, to provide an expanded, polymeric foam bead material having a reduced surface lubricity.

4,302,550

PROCESS AND APPARATUS FOR THE MIXING AND APPLICATION OF REACTIVE MATERIALS

Karl H. Pisaric, Pulheim; Karl-Arnold Weber; Harro Träubel, both of Leverkusen; Dieter Brauner, Solingen, and Manfred H. Pahl, Dormagen, all of Fed. Rep. of Germany, assignors to Bayer Aktiengesellschaft, Leverkusen, Fed. Rep. of Germany

Division of Ser. No. 950,352, Oct. 11, 1978. This application Apr. 29, 1980, Ser. No. 145,205

Claims priority, application Fed. Rep. of Germany, Oct. 14, 1977, 2746188

Int. Cl.³ C08G *18/14, 18/32*

U.S. Cl. 521—133 **11 Claims**

1. A method of mixing a plurality of viscous, rapidly reacting non-gaseous fluid materials in two stages comprising

(1) introducing the materials and a gas into a preliminary mixing chamber in such a manner that an angular momentum is imparted to this mixture of gas and liquid, said manner including the introduction of the gas tangentially to the mixing chamber; and then

(2) feeding said mixture into a short static mixing apparatus which has a narrow residence time spectrum, a small pressure drop, and a short residence time thereby destroying the angular momentum of said mixture, said static

mixing apparatus optionally including an interpolated shearing apparatus between the preliminary mixing cham-

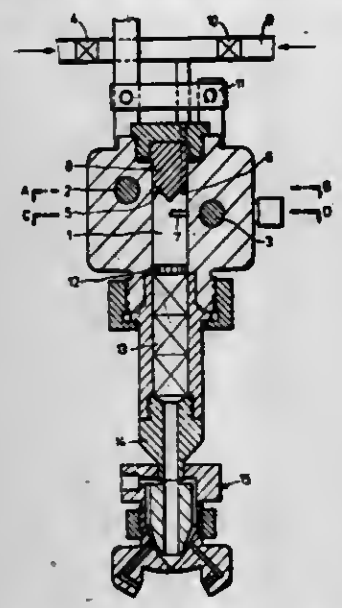

ber and the main body of the static mixing apparatus to effect said momentum destruction.

4,302,551
PROCESS FOR THE PREPARATION OF CELLULAR POLYMERS HAVING URETHANE GROUPS, ISOCYANURATE GROUPS, OR BOTH
Peter Horn, Hirschberg; Anton Hesse, Weinheim; Peter Weyland, Frankenthal; Wolfgang Straehle, Heidelberg, and Matthias Marx, Bad Durkheim, all of Fed. Rep. of Germany, assignors to BASF Aktiengesellschaft, Ludwigshafen, Fed. Rep. of Germany
Filed Dec. 22, 1980, Ser. No. 218,483
Claims priority, application Fed. Rep. of Germany, Jan. 17, 1980, 3001462
Int. Cl.³ C08G *18/14*
U.S. Cl. 521—163 **23 Claims**

1. A process for the preparation of cellular polymers having urethane groups, isocyanurate groups, or both comprising reacting an organic polyisocyanate with a polymer dispersion in the presence of a blowing agent and catalyst wherein the polymer dispersion comprises
(a) as a continuous phase, a polyol having a functionality of 2 to 8 and a hydroxyl number of 150 to 700, and
(b) as a disperse phase, an organic compound having
1. at least one Zerewitinoff active hydrogen atom,
2. a melting point of 30° C. to 260° C., and
3. a molecular weight of 178 to 100,000.

4,302,552
MICROCELLULAR POLYURETHANE VIBRATION ISOLATOR
Tatsuya Hongu; Toshio Suzuki, and Yoshihiko Ogawa, all of Tokyo, Japan, assignors to Nisshin Spinning Co., Ltd., Tokyo, Japan
Filed Jul. 1, 1980, Ser. No. 165,078
Int. Cl.³ C08G *18/14, 18/48*
U.S. Cl. 521—176 **12 Claims**

1. A vibration isolator consisting essentially of a microcellular polyurethane elastomer having a bulk density of 0.3–0.9 g/cm³, a tensile strength of at least 5 kg/cm², a spring constant of at least 0.1 ton/cm, a permanent compression set of 25% at the most, and a fatigue strength of 2.0 mm at the most, said polyurethane elastomer obtained by reacting in the presence of water as the blowing agent
(a) an organic polyisocyanate,
(b) a polyether polyol having an average number of functional groups of 2.5–3.5 and a number molecular weight of 4500–8500, and which is obtained by addition polymerizing ethylene oxide and propylene oxide with a lower aliphatic polyhydric alcohol of 2–6 carbon atoms or with a low molecular weight active hydrogen-containing compound containing at least two active hydrogen atoms, and
(c) a chain extender, in such a ratio that the NCO index is 90–110 and the concentration of the chain extender, based on the total weight of the three components (a), (b), and (c) is 0.4×10^{-3} to 2.0×10^{-3} equivalent/gram.

4,302,553
INTERPENETRATING POLYMERIC NETWORKS
Harry L. Frisch, 132 Mosher Rd., Delmar, N.Y. 12054; Kurt C. Frisch, 17986 Parke La., Grosse Ile, Mich. 48138, and Daniel Klempner, 29340 Dequindre Rd., Apt. 204, Warren, Mich. 48221, assignors to Harry L. Frisch, Delmar, N.Y.; Kurt C. Frisch, Grosse Ile and Daniel Klempner, Warren, both of, Mich.
Continuation-in-part of Ser. No. 85,362, Oct. 30, 1970, abandoned. This application Nov. 2, 1972, Ser. No. 303,272
Int. Cl.³ C08L *33/08, 75/12*
U.S. Cl. 525—28 **21 Claims**

1. A synthetic resin having a topologically interpenetrating polymeric network characterized by a single glass transition temperature comprising at least two separate chemically dissimilar macrocyclic structures of crosslinked polymer chains which do not contain ionizable groups and which are crosslinked by different crosslinking agents which crosslink by different crosslinking mechanisms, the polymer chains of one macrocyclic structure being threaded through, but having substantially no intermolecular chemical bonding with, another macrocyclic structure of the interpenetrating polymeric network, with the proviso that the macrocyclic structures have rings of at least 20 ring atoms.

4,302,554
FILM FOR HEAT SEALING AND PROCESS OF HEAT SEALING
Takeshi Nabeta; Takeshi Masui, and Tsuguo Hasegawa, all of Machida, Japan, assignors to Denki Kagaku Kogyo Kabushiki Kaisha, Tokyo, Japan
Filed Sep. 28, 1978, Ser. No. 946,724
Claims priority, application Japan, Jun. 29, 1978, 53/78058
Int. Cl.³ C08L *53/02*
U.S. Cl. 525—71 **14 Claims**

1. A film for heat sealing which comprises a blend of [I] at least one member selected from the group consisting of (A) an elastomeric block copolymer containing 10 to 50% by weight of styrene and/or alpha-methyl styrene copolymerized with conjugated dienes, (B) a resinous block copolymer containing 50 to 95% by weight of styrene and/or alpha-methyl styrene copolymerized with conjugated dienes, [II] a styrene-butadiene graft-copolymer, and [III] at least one member selected from the group consisting of ethylene-alpha-olefin random copolymers, ethylene-vinyl acetate copolymers, ethylene-alkyl acrylate copolymers, polypropylene and ethylene-propylene elastomers.

4,302,555
COMPATIBILIZATION OF POLYSTYRENE AND PVC
John C. Falk, Chicago, Ill., assignor to Borg-Warner Chemicals, Inc., Parkersburg, W. Va.
Filed Jul. 23, 1980, Ser. No. 171,628
Int. Cl.³ C08L *25/06, 27/06, 53/02*
U.S. Cl. 525—96 **3 Claims**

1. A thermoplastic composition comprising from 99 to 80 wt % of a blend containing from 95 to 5 parts by weight polystyrene and from 5 to 95 parts by weight polyvinyl chloride and correspondingly from 1 to 20 wt % of a chlorinated styrene-butadiene block copolymer.

4,302,556
POLYVINYLIDENE FLUORIDE FILAMENTS
Hiroyuki Endo; Hiroei Ohhira, and Tohru Sasaki, all of Iwaki, Japan, assignors to Kureha Kagaku Kogyo Kabushiki Kaisha, Tokyo, Japan
Filed Aug. 23, 1979, Ser. No. 69,513
Claims priority, application Japan, Aug. 24, 1978, 53-103242
Int. Cl.³ C08F *14/22*
U.S. Cl. 525—199 **7 Claims**

1. Polyvinylidene fluoride filament comprising a blend at 99–40 wt. % of a first polyvinylidene fluoride component having an inherent viscosity higher than 1.30 dl/g and 1–60 wt.% of a second polyvnylidene fluoride component having an inherent viscosity lower than 1.20 dl/g, said blend having a critical shearing stress lower than 2.8×10^4 dyne/cm² and subjected to melt-spinning and successively to a primary and a secondary stretching at 70°–180° C., the overall stretch factor being selected to 4–10.

4,302,557
COLD DRAWN FILM MADE OF AN ETHYLENE POLYMER BLEND COMPOSITION
Isao Yoshimura; Hideo Hata, and Takashi Kaneko, all of Kawasaki, Japan, assignors to Asahi-Dow Limited, Tokyo, Japan
Division of Ser. No. 949,253, Oct. 6, 1978, Pat. No. 4,277,578. This application Jul. 25, 1979, Ser. No. 60,617
Claims priority, application Japan, Oct. 11, 1977, 52-120917; Nov. 22, 1977, 52-139431; May 30, 1978, 53-63870; May 30, 1978, 53-63872
Int. Cl.³ C08L *23/16, 23/08, 23/06*
U.S. Cl. 525—211 **17 Claims**

1. A cold drawn shrinkable film having a tensile strength of not less than 5.0 kg/mm² and a Haze of not more than 4.0%, which film comprises a homogeneous blend of the combination of components (A)+(B), wherein
(A) is at least one selected from the group consisting of low-density polyethylene and copolymers of ethylene with vinyl ester monomers, unsaturated aliphatic monocarboxylic acids and alkyl esters of said monocarboxylic acids which are all copolymerizable with ethylene, and said components (A) having a melt index in the range of from 0.2 to 10
(B) is an elastomer having a density of not more than 0.91 g/cm³ and made of an ethylene-α-olefin copolymer, wherein the components of the composition are in amounts such as to satisfy 0.90 B/(A+B) 0.05 and the blend composition which constitutes the film has an insoluble gel content of from 60 to 0% by weight in boiling xylene and a melt index of not more than 10.

4,302,558
ANTISTATIC RESIN COMPOSITION
Masaki Ohya; Akio Kobayashi; Takeo Ogiwara, and Yoshikatsu Satake, all of Iwaki, Japan, assignors to Kureha Kagaku Kogyo Kabushiki Kaisha, Tokyo, Japan
Filed Sep. 6, 1979, Ser. No. 72,846
Claims priority, application Japan, Sep. 6, 1978, 53-109284
Int. Cl.³ C08F *265/06, 297/02*
U.S. Cl. 525—218 **2 Claims**

1. An antistatic resin composition comprising:
(A) 10 to 100 parts of a graft copolymer obtained by graft-polymerizing 20 to 95% of at least one grafting monomer selected from the group consisting of alkyl acrylates, alkyl methacrylates, styrene and acrylonitriles, onto 5 to 80% of a rubber trunk polymer which in turn is a copolymer of 50 to 99% of a member selected from the group consisting of conjugated dienes, alkyl acrylates and mixtures thereof,
1 to 50% of a polyalkylene oxide monomer selected from the group consisting of those represented by the following general formulae:

$$CH_2{=}\overset{\overset{\displaystyle R_1}{|}}{C}-\overset{\overset{\displaystyle O}{\|}}{C}-O\leftarrow CH_2CHO\rightarrow_m X$$

and

$$CH_2{=}\overset{\overset{\displaystyle R_1}{|}}{C}-\overset{\overset{\displaystyle O}{\|}}{C}-NH\leftarrow CH_2CHO)_m-X$$

where R_1 is H or CH_3, X is H or an alkyl group of 1 to 9 carbon atoms and $6\leqq m\leqq 50$, and 0 to 49% of a monomer selected from the group consisting of alkyl methacrylates, methacrylic acid, acrylonitriles, styrene, itaconic acid and sodium styrene sulfonate; and
(B) 0 to 90 parts of a thermoplastic resin compatible with said graft copolymer (A), said rubber trunk polymer being 5 to 80% of the total of the graft copolymer (A) and the thermoplastic resin (B), all quantities expressed in percentages and parts being by weight.

4,302,559
CONVERSION OF ALPHA-METHYLSTYRENE-TYPE MONOMERS IN THE FORMATION OF COPOLYMERS WITH CONJUGATED DIENE MONOMERS
Floyd E. Naylor, Bartlesville, Okla., assignor to Phillips Petroleum Co., Bartlesville, Okla.
Continuation of Ser. No. 36,267, May 4, 1979, abandoned. This application Oct. 1, 1980, Ser. No. 192,798
Int. Cl.³ C08F *4/48*
U.S. Cl. 525—271 **46 Claims**

1. A process for the preparation of a copolymer of at least one alpha-methylstyrene-type monomer and at least one conjugated diene monomer employing a ratio of charged monomers of about 95:5 to 5:95 weight ratio of conjugated diene:alpha-methylstyrene-monomer which comprises the steps of:
(a) polymerizing under solution polymerization conditions at a first relatively low polymerization temperature in the range of about 0° C. to 40° C., employing a hydrocarbyl monolithium initiator and a first ratio of monomer: polymerization diluent at least one alpha-methylstyrene-type monomer in the further presence of an effective amount of a first polar activator selected from organic polar compounds which have a dielectric constant of between 2 and 9 and which do not contain an active hydrogen atom, thereby producing a polymerization admixture comprising living poly(alpha-methylstyrene-type monomer) homopolymer and residual alpha-methylstyrene-type monomer,
(b) adding to the resulting polymerization admixture a small capping amount of a conjugated diene monomer of at least about 1 per mole of living poly(alpha-methylstyrene-type monomer), optionally with a second amount of diluent, while maintaining solution polymerization conditions at said relatively low first polymerization temperature, and polymerizing said added conjugated diene monomer, thereby producing a polydiene capped homopolymer of alpha-methylstyrene-type monomer,
(c) adding a further amount of conjugated diene monomer and a further amount of polymerization diluent, increasing the polymerization temperature to a higher second polymerization temperature substantially above said first lower polymerization temperature and in the range of about 0° C. to 140° C., and polymerizing said further amount of conjugated diene monomer in the presence of a second organic polar activator selected from alkali metal alkoxides other than of lithium and in the ratio of about 10:1 to 1:10 molar ratio of M:Li wherein M represents the alkali metal,
thereby substantially polymerizing said conjugated diene monomer and at least a portion of said residual alpha-methylstyrene-type monomer as a random copolymer of (conjugated diene/alpha-methylstyrene-type monomer)

onto said capped poly(alpha-methylstyrene-type monomer), and

(d) terminating the polymerization thereby preparing a copolymer of said alpha-methylstyrene-type monomer and said conjugated diene.

4,302,560

PIGMENT DISPERSANTS FOR COATING COMPOSITIONS

David Z. Becher, Allison Park; Roger M. Christenson; Richard L. Coalson, both of Gibsonia; Percy E. Pierce, Monroeville, and Karl F. Schimmel, Verona, all of Pa., assignors to PPG Industries, Inc., Pittsburgh, Pa.

Division of Ser. No. 166,643, Jul. 7, 1980, abandoned, which is a continuation of Ser. No. 938,746, Aug. 31, 1978, abandoned. This application Aug. 14, 1980, Ser. No. 178,196

Int. Cl.³ C08F *8/00, 220/34*

U.S. Cl. 525—327 **39 Claims**

1. A dispersant compatible with a variety of resin-containing coating compositions and especially adapted for dispersing pigments therein, said dispersant being the polymerization product of a mixture of monomers consisting essentially of:

(i) from about 20 percent to about 85 percent of an alkyl methacrylate having from 3 to 8 carbon atoms in the alkyl group;

(ii) from about 5 percent to about 60 percent of a hardening monomer selected from the group consisting of a styrene, methyl methacrylate, ethyl methacrylate and mixtures thereof;

(iii) from about 1 percent to about 25 percent of an ethylenically unsaturated carboxylic acid selected from the group consisting of acrylic acid, methacrylic acid, itaconic acid, crotonic acid, maleic acid, fumaric acid and mixtures thereof; and

(iv) from about 1 percent to about 25 percent of a monomer having a double bond alpha-beta to a carbonyl group and at least one hydroxyl group selected from the group consisting of a monohydroxy alkyl acrylate, monohydroxy alkyl methacrylate, monohydroxy alkyl crotonate, monohydroxy alkyl fumarate, dihydroxy alkyl fumarate, monohydroxy alkyl itaconate, dihydroxy alkyl itaconate, monohydroxy alkyl maleate, dihydroxy alkyl maleate and mixtures thereof; and

(v), wherein (v) is a compound which provides an amine or amine salt functional moiety on the polymerization product at a level of from about 0.1 percent to about 15 percent is provided by (1) a nitrogen-containing ring opening compound having the formula

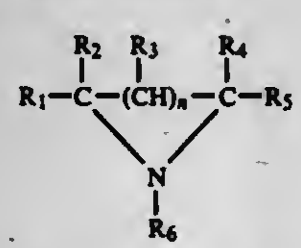

where R_1, R_2, R_4, R_5, and R_6 are each selected from the group consisting of hydrogen, alkyl, aryl, alkaryl and aralkyl, R_3 is selected from the group consisting of hydrogen and lower alkyl and n is 0 or 1, which can be either reacted with the polymerization product of monomers (i) through (iv) or polymerized with monomer (i) through (iv) or (2) an aliphatic or alicyclic amine compound which forms a salt with carboxyl moieties of the polymerization product of monomers (i) through (iv) and further wherein said dispersant has a weight average molecular weight, determined by gel permeation chromotography, using a polystyrene standard, of from about 1,000 to about 10,000.

4,302,561

PIGMENT DISPERSANTS FOR COATING COMPOSITIONS

David Z. Becher, Allison Park; Roger M. Christenson; Richard L. Coalson, both of Gibsonia; Percy E. Pierce, Monroeville, and Karl F. Schimmel, Verona, all of Pa., assignors to PPG Industries, Inc., Pittsburgh, Pa.

Division of Ser. No. 166,643, Jul. 7, 1980, which is a continuation of Ser. No. 938,746, Aug. 31, 1978, abandoned. This application Aug. 14, 1980, Ser. No. 178,207

Int. Cl.³ C08F *8/00, 220/34*

U.S. Cl. 525—327 **33 Claims**

1. A dispersant compatible with a variety of resin-containing coating compositions and especially adapted for dispersing pigments therein, said dispersant being the polymerization product of a mixture of monomers consisting essentially of:

(i) from about 20 percent to about 85 percent of an alkyl methacrylate having from 3 to 8 carbon atoms in the alkyl group;

(ii) from about 5 percent to about 60 percent of a hardening monomer selected from the group consisting of a styrene, methyl methacrylate, ethyl methacrylate and mixtures thereof;

and (iii) from about 2 percent to about 50 percent of an ethylenically unsaturated carboxylic acid selected from the group consisting of acrylic acid, methacrylic acid, itaconic acid, crotonic acid, maleic acid, fumaric acid and mixtures thereof with at least about 1 percent to about 25 percent of the carboxylic acid being acrylic acid or methacrylic acid; and

(iv), wherein (iv) is a compound which provides an amine or amine salt functional moiety on the polymerization product at a level of from about 0.1 percent to about 15 percent is provided by (1) a nitrogen-containing ring opening compound having the formula

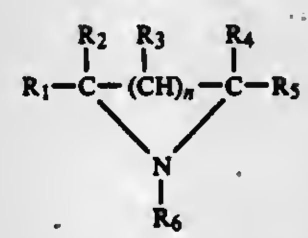

where R_1, R_2, R_4, R_5, and R_6 are each selected from the group consisting of hydrogen, alkyl, aryl, alkaryl and aralkyl, R_3 is selected from the group consisting of hydrogen and lower alkyl and n is 0 or 1, which can be either reacted with the polymerization product of monomers (i) through (iii) or polymerized with monomers (i) through (iii), (2) an acrylic or methacrylic compound containing amino groups which is polymerized with monomers (i) through (iii) or (3) an aliphatic or alicyclic amine compound which forms a salt with carboxyl moieties of the polymerization product of monomers (i) through (iii), further wherein the polymerization product of monomers (i) through (iii) and (iv) is reacted with an epoxide to provide hydroxyl groups, the amount of epoxide being adjusted so that from about 1 percent to about 25 percent of units provided by monomer (iii) are reacted with the epoxide and from about 1 percent to about 25 percent of units provided by monomer (iii) are not reacted with the epoxide and further wherein said dispersant has a weight average molecular weight, determined by gel permeation chromotography, using a polystyrene standard, of from about 1,000 to about 10,000.

4,302,562

PIGMENT DISPERSANTS FOR COATING COMPOSITIONS

David Z. Becher, Allison Park; Roger M. Christenson; Richard L. Coalson, both of Gibsonia; Percy E. Pierce, Monroeville, and Karl F. Schimmel, Verona, all of Pa., assignors to PPG Industries, Inc., Pittsburgh, Pa.

Division of Ser. No. 166,643, Jul. 7, 1980, which is a continuation of Ser. No. 938,746, Aug. 31, 1978, abandoned. This application Aug. 14, 1980, Ser. No. 178,247

Int. Cl.³ C08F *8/00, 220/34*

U.S. Cl. 525—327 **33 Claims**

1. A dispersant compatible with a variety of resin-containing coating compositions and especially adapted for dispersing pigments therein, said dispersant being the polymerization product of a mixture of monomers consisting essentially of:

(i) from about 20 percent to about 85 percent of an alkyl methacrylate having from 3 to 8 carbon atoms in the alkyl group;

(ii) from about 5 percent to about 60 percent of a hardening monomer selected from the group consisting of a styrene, methyl methacrylate, ethyl methacrylate and mixtures thereof;

(iii) from about 1 percent to about 25 percent of an ethylenically unsaturated carboxylic acid selected from the group consisting of acrylic acid, methacrylic acid, itaconic acid, crotonic acid, maleic acid, fumaric acid and mixtures thereof; and

(iv) from about 1 percent to about 25 percent of a glycidyl acrylate or glycidyl methacrylate; and

(v), wherein (v) is a compound which provides an amine or amine salt functional moiety on the polymerization product at a level of from about 0.1 percent to about 15 percent is provided by (1) a nitrogen-containing ring opening compound having the formula

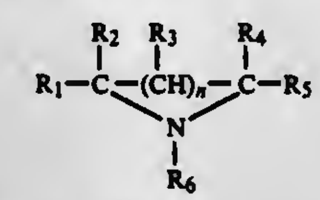

where R_1, R_2, R_4, R_5, and R_6 are each selected from the group consisting of hydrogen, alkyl, aryl, alkaryl and aralkyl, R_3 is selected from the group consisting of hydrogen and lower alkyl and n is 0 or 1, which can be either reacted with the polymerization product of monomers (i) through (iv) or polymerized with monomers (i) through (iv), (2) an acrylic or methacrylic compound containing amino groups which is polymerized with monomers (i) through (iv) or (3) an aliphatic or alicyclic amine compound which forms a salt with carboxyl moieties of the polymerization product of monomers (i) through (iv), further wherein the polymerization product of monomers (i) through (iv) and (v) is reacted with an acid to provide hydroxyl groups from units provided by the glycidyl acrylate or methacrylate and further wherein said dispersant has a weight average molecular weight, determined by gel permeation chromotography, using a polystyrene standard, of from about 1,000 to about 10,000.

4,302,563

REACTIVE CYCLOBUTANONE-CONTAINING POLYMERS AND METHOD FOR PREPARING SAME

Walter L. Vaughn, Lake Jackson, Tex., assignor to The Dow Chemical Company, Midland, Mich.

Filed Apr. 3, 1980, Ser. No. 137,087

Int. Cl.³ C08C *2/00*

U.S. Cl. 525—330 **11 Claims**

1. A synthetic polymer containing at least one cyclobutanone group of the formula

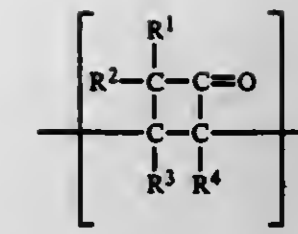

wherein R^1, R^2, R^3, and R^4 are selected from the class consisting of alkyl, aryl, halogen, and hydrogen radicals.

4,302,564

SELECTIVELY CONTROLLING THE HYDROLYTIC STABILITY OF ACETAL CARBOXYLATE POLYMERS

David R. Dyroff, Creve Coeur; Gary J. Lynch, St. Louis County, and Victor D. Papanu, Maryland Heights, all of Mo., assignors to Monsanto Company, St. Louis, Mo.

Filed Jun. 5, 1980, Ser. No. 156,706

Int. Cl.³ C08G *6/00;* **C08L** *61/02*

U.S. Cl. 525—398 **11 Claims**

1. In a method of controlling the hydrolytic stability of an acetal carboxylate polymer having the general formula:

$$R^1-O\!\left(\underset{\displaystyle COOM}{\underset{|}{CHO}}\right)_{\!n}\!R^2$$

wherein n averages at least 4; M is selected from the group consisting of alkyl groups having 1 to about 4 carbon atoms, alkali metals, ammonium and alkanol amine groups having 1 to about 4 carbon atoms; R^1 and R^2 are individually any chemically stable group which stabilizes the polymer against rapid depolymerization in alkaline solution; prepared by:

(a) bringing together under polymerization conditions an ester of glyoxylic acid and a polymerization initiator; and

(b) adding to the termini of the resulting polymer a chemically stable end group to stabilize the polymer against rapid depolymerization in alkaline solution;

the improvement which comprises controlling the hydrolytic stability by the selection of end groups having substituents on the acetal carbon atom nearest the corresponding terminus of the stabilized polymer, the substituents being more electron withdrawing as hydrolytic stability increases.

4,302,565

IMPREGNATED POLYMERIZATION CATALYST, PROCESS FOR PREPARING, AND USE FOR ETHYLENE COPOLYMERIZATION

George L. Goeke, Belle Mead; Burkhard E. Wagner, Highland Park, and Frederick J. Karol, Belle Mead, all of N.J., assignors to Union Carbide Corporation, New York, N.Y.

Continuation-in-part of Ser. No. 892,322, Mar. 31, 1978, abandoned. This application Feb. 16, 1979, Ser. No. 12,720

Int. Cl.³ C08F *2/34, 4/02*

U.S. Cl. 526—88 **6 Claims**

1. A continuous catalytic process for producing ethylene copolymer with a Ti containing catalyst at a productivity of $\geqq$50,000 pounds of polymer per pound of Ti in a fluid bed reactor under a pressure of $<$1000 psi in the gas phase

said polymer being produced in granular form and having a density of $\geqq$0.91 to $\leqq$0.94 and a melt flow ratio of $\geqq$22 to $\leqq$32

which comprises polymerizing ethylene with at least one C_3 to C_8 alpha olefin at a temperature of about 30° to 105° C. by contacting the monomer charge with, in the presence of about 0 to 2.0 mols of hydrogen per mol of ethylene in the gas phase reaction zone, particles of a catalyst composition comprising a precursor composition of the formula

$Mg_mTi_1(OR)_nX_p[ED]_q$

wherein R is a C_1 to C_{14} aliphatic or aromatic hydrocarbon radical, or COR' wherein R' is a C_1 to C_{14} aliphatic or aromatic hydrocarbon radical,
X is selected from the group consisting of Cl, Br, I or mixtures thereof,
ED is an electron donor compound,
m is $\geqq 0.5$ to $\leqq 56$,
n is 0, 1 or 2,
p is $\geqq 2$ to $\leqq 116$, and
q is $\geqq 2$ to $\leqq 85$,
said precursor composition being impregnated in a porous support and being
first partially activated outside of said reactor in a hydrogen slurry with >0 to $\leqq 10$ mols of activator compound per mol of Ti in said precursor composition, and
then completely activated in said reactor with >10 to $\leqq 400$ mols of activator compound per mol of Ti in said precursor composition in the absence of a solvent so as to avoid the need for drying the fully active catalyst to remove solvent therefrom,
said activator compound having the formula

$$Al(R'')_cX'_dH_e$$

wherein X' is Cl or OR''', R'' and R''' are the same or different, and are C_1 to C_{14} saturated hydrocarbon radicals, d is 0 to 1.5, e is 1 or 0 and c+d+e=3,
said electron donor compound being a liquid organic compound in which said precursor composition is soluble and which is selected from the group consisting of alkyl esters of aliphatic and aromatic carboxylic acids, aliphatic esters, cyclic ethers and aliphatic ketones.

4,302,566
PREPARATION OF ETHYLENE COPOLYMERS IN FLUID BED REACTOR

Frederick J. Karol; George L. Goeke, both of Belle Mead; Burkhard E. Wagner, Highland Park; William A. Fraser, Princeton, all of N.J.; Robert J. Jorgensen, Dunbar, W. Va., and Nils Friis, Macungie, Pa., assignors to Union Carbide Corporation, New York, N.Y.

Continuation-in-part of Ser. No. 892,325, Mar. 31, 1978, abandoned. This application Feb. 27, 1979, Ser. No. 14,414
Int. Cl.³ C08F *4/64*
U.S. Cl. 526—125 12 Claims

1. A continuous process for producing ethylene copolymer containing $\geqq 90$ mol percent of ethylene and $\leqq 10$ mol percent of one or more C_3 to C_8 alpha olefins with a Ti containing catalyst at a productivity of $\geqq 50{,}000$ pounds of polymer per pound of Ti under a pressure of <1000 psi in a gas phase fluid bed reaction
said polymer being produced in granular form and having a density of $\geqq 0.91$ to $\leqq 0.96$ and a melt flow ratio of $\geqq 22$ to $\leqq 32$,
which comprises copolymerizing ethylene with >0 to 0.9 mols of one or more C_3 to C_8 αolefin monomers per mol of ethylene at a temperature of about 30° to 115° C. by contacting the monomer charge with, in the presence of about 0 to 2.0 mol of hydrogen per mol of ethylene in a gas phase reaction zone, particles of a non-comminuted catalyst system comprising
an activated precursor composition wherein said precursor composition has the formula

$$Mg_mTi_1(OR)_nX_p[ED]_q$$

wherein
m is $\geqq 0.5$ to $\leqq 56$
n is 0 or 1
p is $\geqq 6$ to $\leqq 116$
q is $\geqq 2$ to $\leqq 85$
R is a C_1 to C_{14} aliphatic or aromatic hydrocarbon radical, or COR' wherein R' is a C_1 to C_{14} aliphatic or aromatic hydrocarbon radical,
X is selected from the group consisting of Cl, Br, I or mixtures thereof,
ED is a liquid organic electron donor compound in which said precursor composition and the Ti and Mg components thereof are soluble and which is selected from the group consisting of alkyl esters of aliphatic and aromatic carboxylic acids, aliphatic ethers, cyclic ethers and aliphatic ketones,
said precursor composition being diluted with at least one solid inert carrier material and being either
completely activated, prior to the feeding of the activated precursor composition to said reaction zone with $\geqq 10$ to $\leqq 400$ mols of carrier absorbed activator compound per mol of titanium compound in said precursor composition so as to thereby prepare a solid dry catalyst composition without having to heat said catalyst composition above 50° C., or
partially activated with >0 to <10 mols of activator compound per mol of titanium compound in said precursor composition prior to feeding of the activated precursor composition to said reaction zone and then being completely activated in said reaction zone with $\geqq 10$ to $\leqq 400$ mols of activator compound per mol of titanium compound in said precursor composition, and
said activator compound having the formula

$$Al(R'')_cX'_dH_e$$

wherein X' is Cl or OR''', R'' and R''' are the same or different and are C_1 to C_{14} saturated hydrocarbon radicals
d is 0 to 1.5,
e is 0 or 1, and
c+d+e=3.

4,302,567
PROCESS FOR THE HOMO- AND CO-POLYMERIZATION OF α-OLEFINS

Müfit Bahadir, Dinslaken, and Wolfgang Payer, Wesel, both of Fed. Rep. of Germany, assignors to Ruhrchemie Aktiengesellschaft, Oberhausen, Fed. Rep. of Germany

Filed Oct. 20, 1980, Ser. No. 198,893
Claims priority, application Fed. Rep. of Germany, May 29, 1980, 3020316
Int. Cl.³ C08F *4/64*
U.S. Cl. 526—159 3 Claims

1. In a process for the homo- and co-polymerization of a α-olefin at 30° to 120° C. and 2 to 100 bars in the presence a catalyst system comprising a microcrystalline titanium(III) compound prepared by the reduction of a titanium(IV) compound with an organoaluminum or organomagnesium compound in a neutral organic solvent which dissolves both reactants, and of an organoaluminum compound as activator, the improvement wherein the reduction of the titanium(IV) compound is effected in the presence of from 0.2 to 5 weight percent of an atactic poly-α-olefin, based on the weight of the solvent.

4,302,568
SOLUTION POLYMERIZATION

Robert E. Bingham, Cuyahoga Falls; Richard R. Durst, Stow; Hubert J. Fabris, Akron; Ivan G. Hargis, Tallmadge; Russell A. Livigni, and Sundar L. Aggarwal, both of Akron, all of Ohio, assignors to The General Tire & Rubber Co., Akron, Ohio

Filed Feb. 25, 1980, Ser. No. 124,373
Int. Cl.³ C08F *4/52*
U.S. Cl. 526—187 13 Claims

1. The method which comprises polymerizing under inert conditions in a hydrocarbon solvent at a temperature of from about 0° to 150° C. a polymerizable ethylenically unsaturated monomer having an activated double bond with a catalyst in a minor effective amount sufficient to polymerize said monomer to obtain a polymer, said catalyst comprising (1) an alcoholate selected from the group consisting of barium alcoholate, calcium alcoholate and strontium alcoholate and mixtures thereof, (2) an organoaluminum compound selected from the group consisting of alkyl and cycloalkyl aluminum compounds and mixtures of the same in which the organic moities have from 1 to 20 carbon atoms and (3) an organomagnesium compound selected from the group consisting of alkyl and cycloalkyl magnesium compounds and mixtures of the same in which the organic moities have from 1 to 20 carbon atoms, where the mol ratio computed as metal of barium, calcium and/or strontium to magnesium is from about 1:10 to 1:2 and where the mol ratio computed as metal or magnesium to aluminum is from about 105:1 to 1.5:1.

4,302,569
2-CHLORO-2-ALKYL SUBSTITUTED PEROXYESTERS

Reidar Halle, Novato, and David Peterson, Hercules, both of Calif., assignors to Argus Chemical Corporation, Brooklyn, N.Y.

Division of Ser. No. 98,010, Nov. 28, 1979, Pat. No. 4,278,612, which is a continuation-in-part of Ser. No. 50,898, Jun. 21, 1979, abandoned. This application Nov. 3, 1980, Ser. No. 203,788
Int. Cl.³ C08F *4/34, 4/36*
U.S. Cl. 526—231 22 Claims

1. In the polymerization of a monomer mass selected from the group consisting of ethylene, styrene, methyl methacrylate and vinyl chloride and in the copolymerizations thereof, including copolymerization with vinyl acetate, the improvement in which the polymerization and copolymerization of said monomer mass is initiated with a peroxyester of the formula:

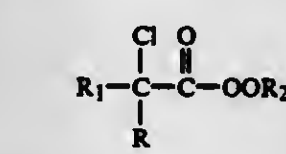

wherein R_2 is selected from

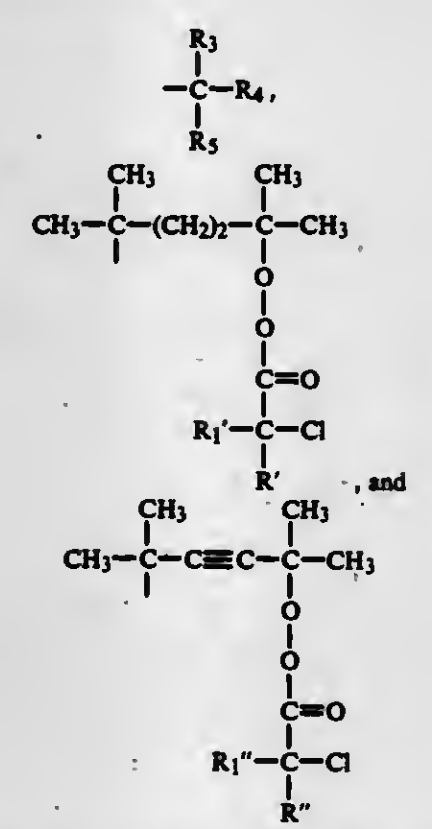

and R and R_1 are alkyl groups which collectively contain up to about 10 carbon atoms providing R_1 and R are not both methyl when R_2 is t-butyl,
R' and R_1' are alkyl groups which collectively contain up to about 10 carbon atoms,
R'' and R_1'' are alkyl groups which collectively contain up to about 10 carbon atoms, and
R_3, R_4 and R_5 are alkyl groups which collectively contain up to about 9 carbon atoms.

4,302,570
REACTIVE PLASTICIZER FOR ANAEROBIC ADHESIVES

Gerhardt P. Werber, Naperville, Ill., assignor to Eschem Inc., Chicago, Ill.

Filed Aug. 1, 1978, Ser. No. 930,049
Int. Cl.³ C08F *218/14, 218/18, 220/12*
U.S. Cl. 526—320 3 Claims

1. As a novel composition of matter, a liquid anaerobically curable adhesive composition comprising an anaerobically, polymerizable acrylate, o-benzoic sulfimide as a promoter to accelerate polymerization and a reactive plasticizer which is a non-terminal hydroxy diester of the formula:

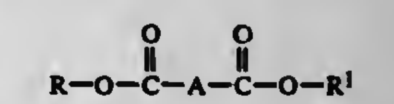

wherein R is aryl or an aliphatic hydrocarbon radical of about 1-22 carbons, R¹ is a hydroxy containing radical of about 2-22 carbons formed from a glycidyl ether and A is the remaining portion of an unsaturated dicarboxylic acid or anhydride, said composition having good shear and hot strength and shelf stability.

4,302,571
ROOM TEMPERATURE-CURABLE POLYOXYALKYLENE POLYETHER COMPOSITIONS

Masatoshi Arai, and Koji Futatsumori, both of Annaka, Japan, assignors to Shin-Etsu Chemical Co., Ltd., Tokyo, Japan

Filed Mar. 4, 1980, Ser. No. 127,074
Claims priority, application Japan, Mar. 16, 1979, 54-30618
Int. Cl.³ C08G *77/16*; C08L *83/12*
U.S. Cl. 528—32 15 Claims

1. A room temperature-curable polyoxyalkylene polyether composition which comprises
(a) 100 parts by weight of a polyoxyalkylene polyether terminated at both chain ends with silyl groups and represented by the general formula

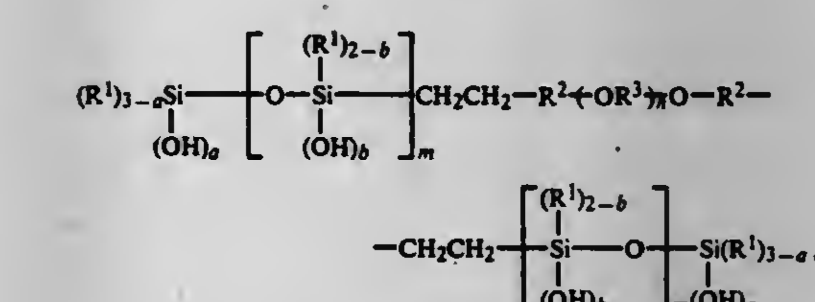

where R^1 is a substituted or unsubstituted monovalent hydrocarbon group or a triorganosiloxy group, R^2 is a divalent hydrocarbon group, a is zero, 1, 2 or 3, b is zero, 1 or 2 with the proviso that a+b is a positive integer not exceeding 3, m is zero, 1 or 2 and n is a positive integer, having an average molecular weight in the range from 400 to 15,000, or a partial condensation product thereof, and
(b) from 1 to 30 parts by weight of an organosilane or an organopolysiloxane represented by the formula

$$R^4_dY_eSiO_{\frac{4-d-e}{2}},$$

where R^4 is a monovalent hydrocarbon group, Y is a hydrolyzable group, d is zero or a positive number not

exceeding 2 and e is a positive number not exceeding 4 with the proviso that d+e is a positive number not exceeding 4, and having at least two hydrolyzable group represented by Y in a molecule.

4,302,572
POLYISOCYANATOIMIDO COMPOSITIONS AND IMIDE GROUP CONTAINING POLYMERS PREPARED THEREFROM

Jean-Louis Locatelli, Vienne, and Jean Robin, Lyons, both of France, assignors to Rhone-Poulenc Industries, Paris, France
Division of Ser. No. 865,210, Dec. 28, 1977, abandoned. This application Jan. 17, 1980, Ser. No. 112,932
Claims priority, application France, Dec. 31, 1976, 76 39874
Int. Cl.^{3} C08G *18/02*

U.S. Cl. 528—73 15 Claims

1. A composition of matter comprising (A) at least one organic polyisocyanate, (B) at least one unsaturated imide selected from the group consisting of:

(i) a monoimide of the formula:

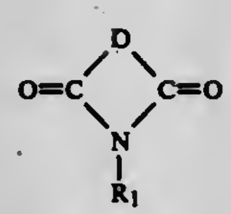

wherein D represents

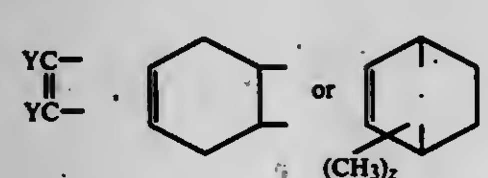

in which Y is H, CH_3 or Cl, and Z is either 0, 1 or 2, and R_1 is hydrogen or a monovalent aliphatic, cycloaliphatic or aromatic hydrocarbon radical containing up to 20 carbon atoms; and

(ii) a polyimide of the formula:

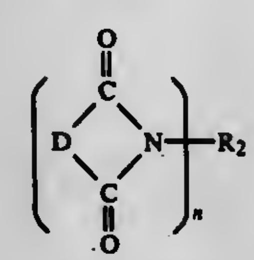

wherein D is as above, n is a number ranging from 2 to 5 and R_2 is a radical having the valence n, such R_2 radical being selected from the group consisting of a wholly hydrocarbon radical, a heteroatom interrupted hydrocarbon radical, a heterocycle radical and a heterocycle containing hydrocarbon radical and wherein said composition the ratio r of total isocyanate functions in the polyisocyanate (A) to total polymerizable double bonds in the unsaturated imide (B) is in the range of from 0.3 to 15, and (C) an additional comonomer which is an olefinically unsaturated comonomer copolymerizable with the unsaturated imide (B).

4,302,573
METAL SALT/AMINE COMPLEXES AS EPOXY RESIN CATALYTIC CURING AGENTS

Friedrich Stockinger, Hölstein; Sameer H. Eldin, Birsfelden, and Friedrich Lohse, Oberwil, all of Switzerland, assignors to Ciba-Geigy Corporation, Ardsley, N.Y.
Division of Ser. No. 956,520, Oct. 31, 1978, abandoned. This application May 7, 1980, Ser. No. 147,682
Claims priority, application Switzerland, Nov. 4, 1977, 13446/77
Int. Cl.^{3} C08G *59/70*

U.S. Cl. 528—89 6 Claims

1. A storage-stable, heat-curable mixture comprising
(a) an epoxide compound having on average more than one epoxy group per molecule and
(b) 1 to 30 parts per 100 parts by weight of the epoxide compound (a) of a metal/amine complex of the formula

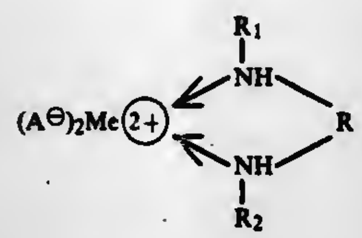
(I)

wherein $A^{\ominus}$ is an anion of the formula II (I)

$$R_3-NH-CO-Y_1-COO^{\ominus} \quad \text{(II)}$$

in which R_3 is —H, alkyl having 1 to 4 C atoms, cyclopentyl or cyclohexyl and Y_1 is a radical of the formulae $-(CH_2)_x$, in which x=2 or 3, —CH=CH— or an anion of the formulae

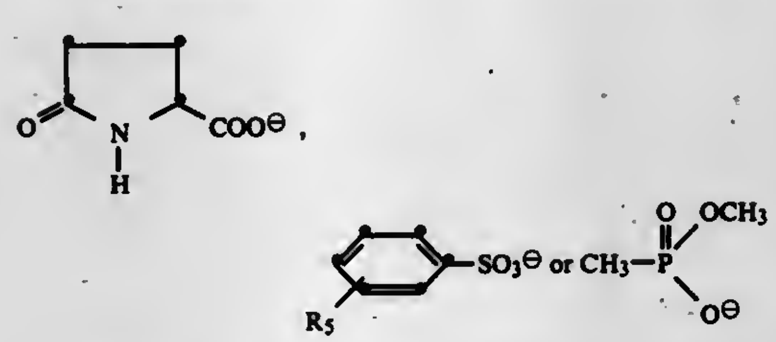

in which R_5 is —H or methyl, Me (2+) is a divalent metal cation and, if R_1 and R_2 are each a hydrogen atom, R is one of the following radicals $-(CH_2-CH_2)_p$, in which p = a number from 1 to 6,

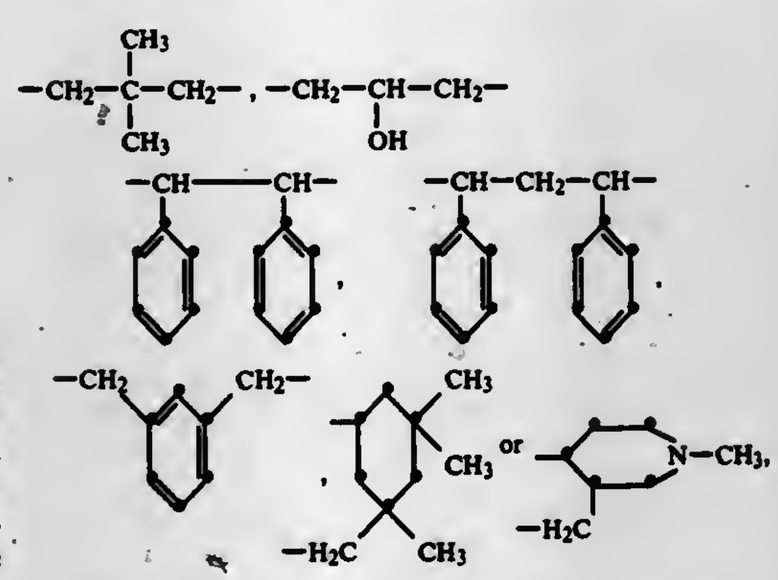

and, if R_1 is a hydrogen atom and R_2 is an alkyl having 1 to 4 atoms, cyclohexyl, benzyl, 2-aminoethyl or 3-aminopropyl, or if R_1 and R_2 are each an alkyl having 1 to 4 C

atoms, cyclohexyl or benzyl, R is an ethylene or propylene radical.

4,302,574
PHOSPHONIUM PHENOXIDE CATALYSTS FOR PROMOTING REACTING OF EPOXIDES WITH PHENOLS AND/OR CARBOXYLIC ACIDS

George A. Doorakian, Bedford, Mass., and James L. Bertram, Lake Jackson, Tex., assignors to The Dow Chemical Company, Midland, Mich.
Continuation-in-part of Ser. No. 41,567, May 23, 1979, abandoned. This application May 12, 1980, Ser. No. 148,875
Int. Cl.^{3} C08G *59/68*

U.S. Cl. 528—89 21 Claims

1. A precatalyzed epoxy resin comprising (a) an epoxy resin bearing an average of more than one vicinal epoxy group per molecule and (b) a catalytic amount of a compound represented by the formula

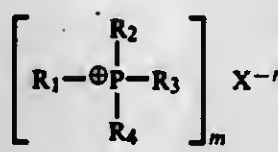
I

or a complex of the compound represented by Formula I with one or more equivalents of (1) an aromatic carbocyclic hydroxyl compound, H_mX, or (2) a tetrahydrocarbyl phosphonium hydroxide salt, wherein
(1) R_1-R_4 each independently is hydrocarbyl or inertly-substituted hydrocarbyl;
(2) X is the conjugate base or the diconjugate base of an aromatic carbocyclic nuclear hydroxylbearing compound; and
(3) m is the valence of the anion X.

3. In the process of reacting, at an elevated temperature, (a) an epoxy resin bearing an average of more than one vicinal group per molecule with (b) a polyhydric phenol or carboxylic acid or anhydride, the improvement comprising conducting the reaction in the presence of a catalytic amount of the compound represented by the formula

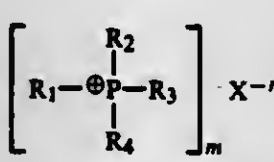
I

or a complex of the compound represented by Formula I with one or more equivalents of (1) an aromatic carbocyclic hydroxyl compound, H_mX, or (2) a tetrahydrocarbyl phosphonium hydroxide salt, wherein
(1) R_1-R_4 each independently is a hydrocarbyl or inertly-substituted hydrocarbyl;
(2) X is a conjugate base of an aromatic carbocyclic nuclear hydroxyl-bearing compound; and
(3) m is the valence of the anion X.

4,302,575
HEAT CURABLE POLYIMIDES

Tohru Takekoshi, Scotia, N.Y., assignor to General Electric Company, Schenectady, N.Y.
Filed Dec. 26, 1979, Ser. No. 107,173
Int. Cl.^{3} C08G *73/12*

U.S. Cl. 528—185 8 Claims

1. Heat curable polyimide compositions having improved processability at a temperature in the range of from 150° C. to 190° C. prior to curing comprising polyetherimide having terminal aliphatically unsaturated groups of the formula,

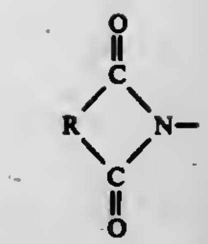

which consists essentially of chemically combined units selected from

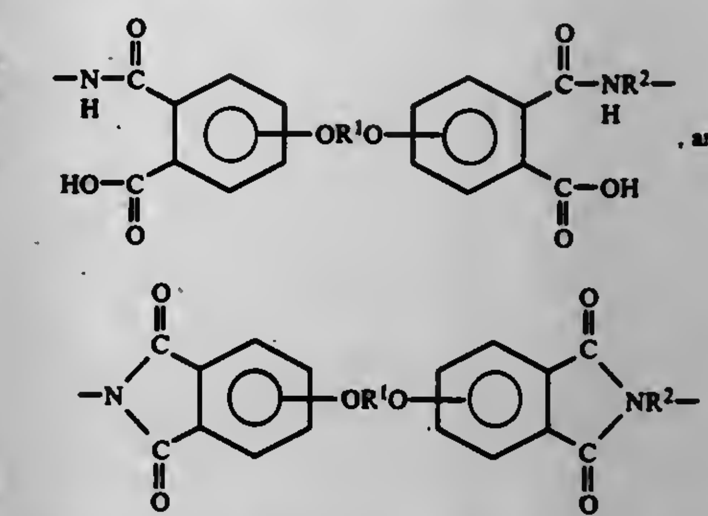

and mixtures thereof, where R is a divalent aliphatically unsaturated organo radical selected from hydrocarbon radicals and halogenated hydrocarbon radicals, R^1 is a $C_{(6-30)}$ divalent aromatic organic radical and R^2 is a divalent organic radical selected from the class consisting of (a) aromatic hydrocarbon radicals having from 6-20 carbon atoms and halogenated derivatives thereof, (b) alkylene radicals and cycloalkylene radicals having from 2-20 carbon atoms, and (c) divalent radicals included by the formula,

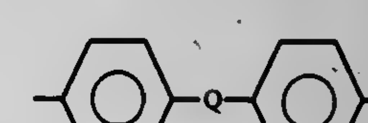

where Q is a member selected from the class consisting of

$$-O-,\ -\overset{O}{\overset{\|}{C}}-,\ -\overset{O}{\underset{O}{\overset{\|}{\underset{\|}{S}}}}-,\ -S-,\ \text{and}\ -C_xH_{2x}-,$$

and x is a whole number from 1 to 5 inclusive.

4,302,576
LACTONE COPOLYMERS AS STRIPPING AIDS IN RECOVERY OF POLYMER FROM SOLUTION

Larry L. Nash, Borger, Tex., assignor to Phillips Petroleum Company, Bartlesville, Okla.
Filed Oct. 23, 1980, Ser. No. 199,764
Int. Cl.^{3} C08F *6/10*

U.S. Cl. 528—500 8 Claims

1. In a steam-stripping process for recovering a polymer prepared by polymerizing an olefinically unsaturated monomer in a hydrocarbon solvent with an organometal initiator wherein the resulting polymer-in-hydrocarbon solvent solution is steam-stripped to remove said hydrocarbon solvent and to produce polymer crumb in aqueous phase after shortstopping the process of polymerizing.

the improvement which comprises employing during said

steam-stripping an effective steam-stripping amount of a low molecular weight lactone copolymer as stripping aid, wherein said lactone copolymer is a copolymer of a lactone with a conjugated diene and/or a monovinylarene, and has a molecular weight of about 2000 to 100000.

4,302,577

PROCESS FOR PREPARING CSA OR CSC

Perry G. Rucker, Los Angeles, Calif., assignor to Biomed Research Inc., Los Angeles, Calif.

Continuation-in-part of Ser. No. 82,045, Oct. 5, 1979, abandoned. This application Feb. 4, 1980, Ser. No. 118,211

Int. Cl.³ C07H *11/00*

U.S. Cl. 536—118 **10 Claims**

1. In an improved process or method for the preparation of pharmaceutical grade biologically "active" chondroitin sulfate, predominantly condroitin sulfate A, chondroitin sulfate C, and mixtures thereof from source material comprising forming a solution from the source material containing said "active" material, the improvement comprising adding thereto a complexing agent selected from the group consisting of cetyl pyridinium chloride, a quarternary ammonium salt and an anion exchange resin to form a precipitate which is a water insoluble complex of the active material and the complexing agent, and breaking said complex to recover the pharmaceutical grade "active" material.

4,302,578

CEPHALOSPORIN ANTIBIOTICS

Edward O. Stapley, Metuchen, N.J., and Justo M. Mata, Madrid, Spain, assignors to Merck & Co., Inc., Rahway, N.J.

Continuation-in-part of Ser. No. 96,594, Dec. 9, 1970, abandoned, Ser. No. 51,319, Jun. 30, 1970, abandoned, and Ser. No. 19,496, Mar. 13, 1970, abandoned. This application Feb. 16, 1971, Ser. No. 115,779

Int. Cl.³ C07D *501/20*

U.S. Cl. 542—427 **7 Claims**

1. A compound of the formula

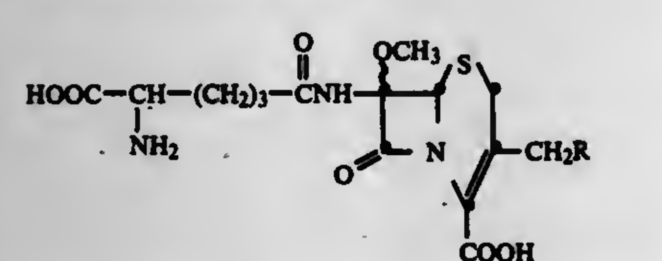

wherein R is α-methoxy-p-sulfooxycinnamoyloxy; α-methoxy-p-hydroxycinnamoyloxy; or a pyridinium radical of the formula:

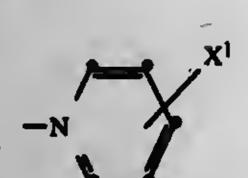

wherein X¹ is hydrogen, halogen, trifluoromethyl, organo, carboxy, carbamoyl, N-loweralkyl carbamoyl, N,N-diloweralkyl carbamoyl, carboxymethyl, lower alkanoyl, loweralkyl, hydroxymethyl, or sulfo.

4,302,579

OPTICAL BRIGHTENING AGENTS AND PHOTOGRAPHIC MATERIALS WHICH CONTAIN THESE BRIGHTENING AGENTS

Graham Evans, Galleywood, England, assignor to Ciba-Geigy AG, Basel, Switzerland

Filed Jul. 24, 1980, Ser. No. 171,869

Claims priority, application United Kingdom, Aug. 21, 1979, 29033/79

Int. Cl.³ C07D *403/10*

U.S. Cl. 542—461 **10 Claims**

1. A brightening agent of the general formula

(1)

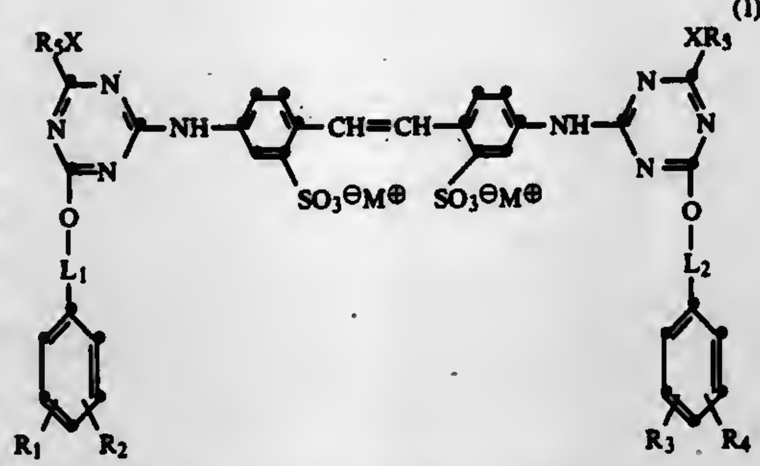

wherein R_1 and R_3 are each hydrogen or methyl, R_2 and R_4 are alkyl having at least six carbon atoms, R_5 is hydrogen or alkyl, aryl or aralkyl, X is —NH—, —O— or —S—, L_1 and L_2 are each alkylene oxide chains having two to 20 alkyene oxide units in the chain and $M^{\oplus}$ is a hydrogen or an alkylene metal cation.

4,302,580

PROCESS FOR THE PRODUCTION OF A CEPHAMYCIN DERIVATIVE

Katsuyoshi Iwamatsu; Jiro Itoh, both of Yokohama; Shoji Omoto, Tokyo; Takashi Tsuruoka, Kawasaki, and Shigeharu Inouye, Yokohama, all of Japan, assignors to Meiji Seika Kaisha, Ltd., Tokyo, Japan

Filed Sep. 9, 1980, Ser. No. 185,594

Claims priority, application Japan, Sep. 17, 1979, 54/117911

Int. Cl.³ C07D *501/36*

U.S. Cl. 544—21 **9 Claims**

1. A process for the production of 7β-[(2D-2-amino-2-carboxy)ethylthioacetamido]-7α-methoxy-3-[(1-methyl-1H-tetrazole-5-yl)thiomethyl]-3-cephem-4-carboxylic acid which comprises the consecutive steps of:

(a) reacting cephamycin A and/or cephamycin B with 5-mercapto-1-methyl-1H-tetrazole to produce the compound of the formula (I)

(I)

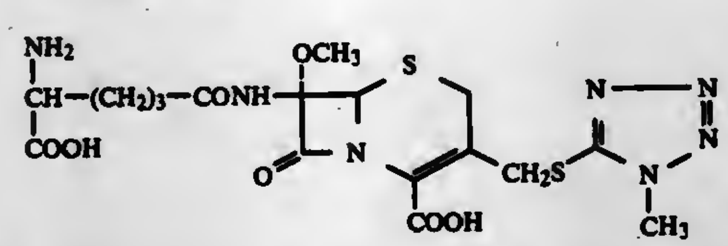

(b) reacting the compound (I) with an acylating agent for introduction of an amino-protecting group to produce a compound of the formula (II)

(II)

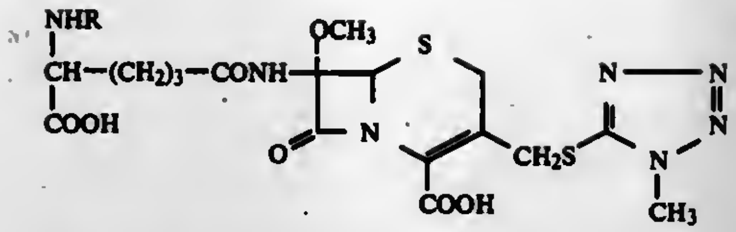

wherein R represents the amino-protecting group of acyl type,

(c) reacting the compound (II) with a reagent for introduction of a carboxyl-protecting group to block the two carboxyl groups of the compound (II) and produce the compound of the formula (II')

(II')

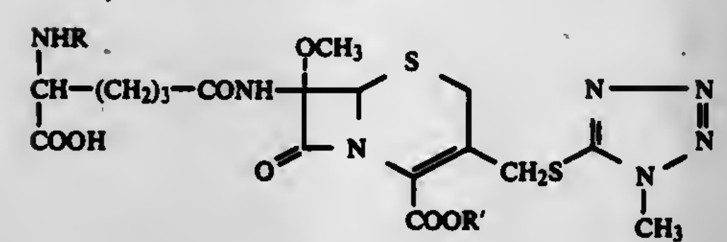

wherein R' represents the carboxyl-protecting group,

(d) reacting the compound (II') with a halogenoacetyl halide of the formula

XCH_2COX'

wherein X and X', which may be the same or different, each represents a halogen, particularly chlorine or bromine, in the presence of a molecular sieves material or in the presence of a silylating agent to produce a compound of the formula

(III)

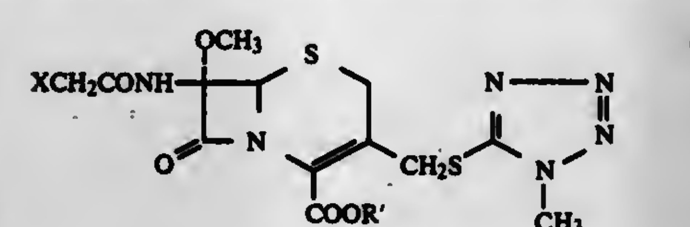

wherein X is as defined above and R' represents the carboxyl-protecting group as above,

(e) removing the carboxyl-protecting group (R') from the compound (III) in a known manner to produce the compound of the formula (III')

(III')

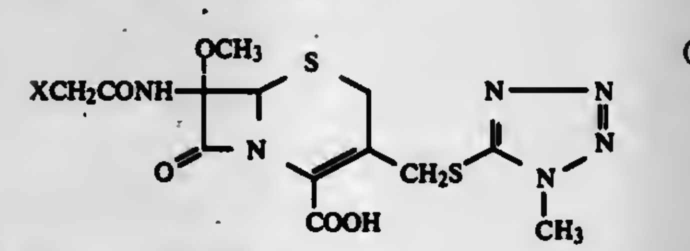

wherein X is as defined above, and

(f) reacting the compound (III') with D-cysteine to produce the desired product.

4,302,581

7-(1,3-DITHIOLAN-2-IMINO)CEPHALOSPORANIC ACID DERIVATIVES

Boyd L. Harrison, and Joseph E. Dolfini, both of Cincinnati, Ohio, assignors to Richardson-Merrell Inc., Wilton, Conn.

Division of Ser. No. 19,417, Mar. 12, 1979, Pat. No. 4,206,305. This application Nov. 5, 1979, Ser. No. 91,465

Int. Cl.³ C07D *501/36*

U.S. Cl. 544—27 **4 Claims**

1. A 7-(1,3-dithiolan-2-imino)cephalosporanic acid derivative having the formula

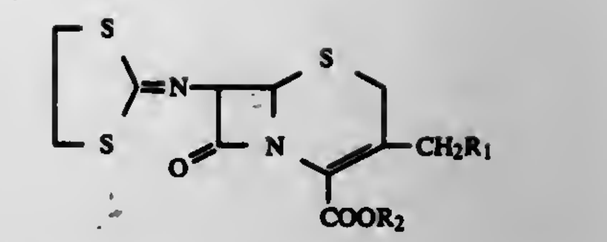

wherein

R_1 is selected from the group consisting of 5-methyl-1,3,4-thiadiazol-2-ylthio, 1-methyl-1,2,3,4-tetrazol-5-ylthio and 1,2,3-triazol-4-ylthio;

R_2 is selected from the group consisting of hydrogen, t-butyl, 2,2,2-trichloroethyl, benzhydryl, formyloxymethyl and alkanoyloxymethyl in which the alkanoyl group contains from 2 to 5 carbon atoms; and

the pharmaceutically acceptable salts thereof.

4,302,582

PROCESS FOR THE PREPARATION OF A CONDENSATION PRODUCT FROM PHENOTHIAZINE AND P-NITROSOPHENOL

Gert Nagl, Frankfurt am Main; Joachim Ribka, Offenbach-Bürgel; Ulrich Gotsmann, and Heinz Dickmanns, both of Frankfurt am Main, all of Fed. Rep. of Germany, assignors to Cassella Aktiengesellschaft, Frankfurt, Fed. Rep. of Germany

Continuation-in-part of Ser. No. 955,643, Oct. 30, 1978, Pat. No. 4,218,219. This application Jan. 31, 1980, Ser. No. 117,127

Claims priority, application Fed. Rep. of Germany, Oct. 29, 1977, 2748744; Mar. 5, 1979, 2908486

The portion of the term of this patent subsequent to Aug. 19, 1997, has been disclaimed.

Int. Cl.³ C07D *513/00*

U.S. Cl. 544—37 **5 Claims**

1. In the process for preparation of a condensation product of phenothiazine and p-nitrosophenol which contains more than 60% by weight of indophenol-S-oxide of the formula

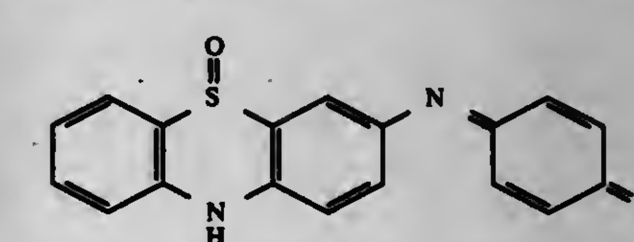

by condensing phenothiazine with p-nitrosophenol in sulphuric acid wherein the improvement comprises the phenothiazine being in 60 to 90% strength sulphuric acid at the time of the addition of p-nitrosophenol in an amount of no more than 1.125 moles per mole of phenothiazine.

4,302,583

PROCESS FOR THE PREPARATION OF ACYL CYANIDES

Kurt Findeisen, Odenthal, and Karl-Heinz Linker, Leverkusen, both of Fed. Rep. of Germany, assignors to Bayer Aktiengesellschaft, Leverkusen, Fed. Rep. of Germany

Filed Apr. 25, 1979, Ser. No. 33,606

Claims priority, application Fed. Rep. of Germany, May 11, 1978, 2820575

Int. Cl.³ C07D *307/30, 207/10, 253/06, 235/04*

U.S. Cl. 544—176 **36 Claims**

1. A process for the preparation of a monomeric acyl cyanide of the formula

$$R-\overset{\overset{\displaystyle O}{\|}}{C}-CN\,, \qquad (I)$$

in which

R is optionally substituted alkyl of up to 8 carbon atoms and the substituents are selected from phenyl and naphthyl optionally substituted with alkyl, alkoxy, carbalkoxy and halogen; alkoxy or carboalkoxy of up to 4 carbon atoms in the alkoxy moiety; nitro; nitrile; and halogen;
cycloalkyl which has 5 or 6 carbon atoms in the ring system and optionally substituted with at least one of alkyl, alkoxy or carboalkoxy with up to 4 carbon atoms, nitro, nitrile and halogen;
phenyl or naphthyl optionally substituted with alkyl, alkoxy or carboalkoxy of up to 4 carbon atoms, nitro, nitrile and halogen;
a heterocyclic radical of 5 to 6 ring atoms which can include 1 to 3 hetero ring atoms selected from oxygen, sulfur and nitrogen;
a heterocyclic radical of 5 to 6 ring atoms fused to a benzene ring and which can include 1 to 3 hetero ring atoms selected from oxygen, sulfur and nitrogen; and
a substituted heterocyclic radical of 5 or 6 ring atoms and 1 to 3 hetero atoms selected from oxygen, sulfur, nitrogen and at least one substituent selected from alkyl, alkoxy and carbalkoxy with, in each case, up to 4 carbon atoms, nitro, nitrile and halogen,

which process comprises heating the corresponding dimeric acyl cyanide of the general formula

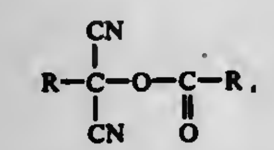

(II)

in which R has the meaning stated above, to a temperature of from 50° to 300° C. in the presence of a basic compound and rapidly removing the monomeric acyl cyanide (I) formed from the reaction mixture.

4,302,584
PREPARATION OF 3,3-DIMETHYL-PENT-4-ENOIC ACID AMIDES
Klaus Halbritter, Mannheim, Fed. Rep. of Germany, assignor to BASF Aktiengesellschaft, Fed. Rep. of Germany
Filed Aug. 7, 1980, Ser. No. 175,939
Claims priority, application Fed. Rep. of Germany, Sep. 19, 1979, 2937815
Int. Cl.³ C07C *102/00;* **C07D** *295/10*
U.S. Cl. 544—176 **4 Claims**

1. A process for the preparation of a 3,3-dimethylpent-4-enoic acid amide of the formula I

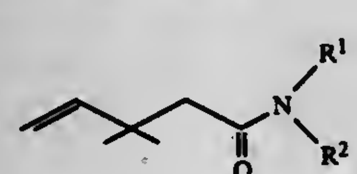

I

where
R^1 and R^2 may be identical or different and each is alkyl of 1 to 4 carbon atoms, or R^1 and R^2 together with the nitrogen on which they are present as substituents form a pyrrolidine, piperidine or morpholine ring,
wherein an acetamido-acetal of the formula II

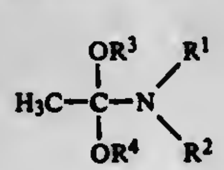

II

where
R^3 and R^4 may be identical or different and each is alkyl of 1 to 4 carbon atoms, or R^3 and R^4 together are unbranched or branched alkylene of 2 or 3 carbon atoms, and R^1 and R^2 have the above meanings,
or a ketene-acetal-aminal of the formula III

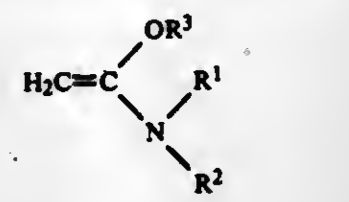

III

where
R^3 is alkyl of 1 to 4 carbon atoms and R^1 and R^2 have the above meanings,
is reacted with 3-methyl-but-2-en-1-ol at from 80° to 200° C.

4,302,585
3-HYDROXY-3-SUBSTITUTED PHENYLTHIAZOLO[2,3-B]QUINAZOLINE-2-ALKANOIC ACIDS AND THEIR LACTONES
Peter H. L. Wei, Springfield, and Stanley C. Bell, Penn Valley, both of Pa., assignors to American Home Products Corporation, New York, N.Y.
Filed Dec. 22, 1980, Ser. No. 218,904
Int. Cl.³ C07D *513/04, 513/14;* **A61K** *31/505*
U.S. Cl. 544—247 **3 Claims**

1. A compound of the formula:

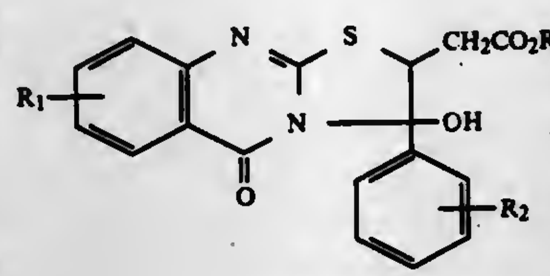

or

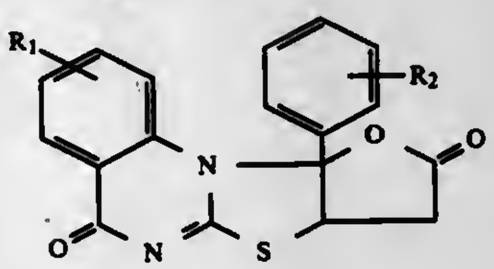

wherein
R_1 is hydrogen, lower alkyl of 1–4 carbon atoms, CF_3, NO_2 or NH_2;
R_2 is hydrogen, lower alkyl of 1–4 carbon atoms, CF_3, halo, cyclohexyl or phenyl; and
R_3 is hydrogen or lower alkyl of 1–4 carbon atoms.

4,302,586
V-TRIAZOLYL-[4,5-D]-PYRIMIDINES
Ian J. Fletcher, Magden, Switzerland, assignor to Ciba-Geigy Corporation, Ardsley, N.Y.
Filed Jan. 10, 1980, Ser. No. 111,045
Claims priority, application Switzerland, Jan. 19, 1979, 564/79
Int. Cl.³ C07D *487/04;* **D06L** *3/12*
U.S. Cl. 544—254 **5 Claims**

1. A v-triazolyl-[4,5-d]-pyrimidine of the formula

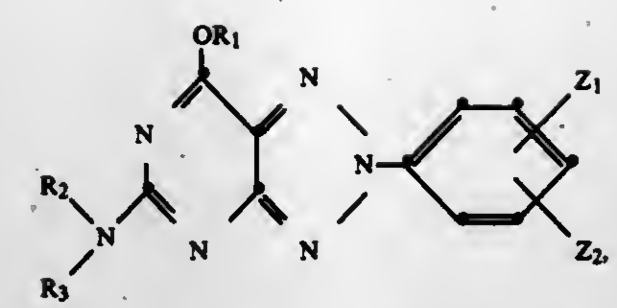

(I)

wherein R_1 is alkyl of 1 to 12 carbon atoms, alkoxyalkyl containing a total of 3 to 8 carbon atoms, alkenyl of 3 to 6 carbon atoms, phenyl which is unsubstituted or substituted by 1 to 3 members selected from the group consisting of halogen; alkyl or alkoxy each of 1 to 4 carbon atoms, or is a group of the formula

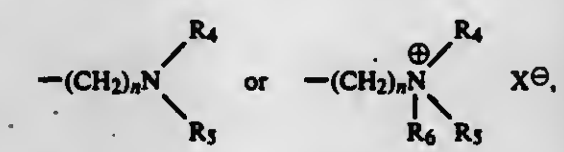

wherein each of R_4, R_5 and R_6 independently is alkyl of 1 to 4 carbon atoms, n is an integer from 2 to 6 and $X^{\ominus}$ is chloride, bromide, iodide, alkylsulfate, unsubstituted phenylsulfonate or phenylsulfonate ion substituted by halogen, lower alkyl groups or both halogen and lower alkyl groups; R_2 is alkyl of 1 to 12 carbon atoms, hydroxyalkyl of 2 to 6 carbon atoms or dialkylaminoalkyl containing 1 to 4 carbon atoms in each alkyl moiety; R_3 is hydrogen, alkyl of 1 to 12 carbon atoms or hydroxyalkyl of 2 to 6 carbon atoms, or R_2 and R_3 together with the nitrogen atom to which they are attached complete a pyrrolidine, piperidine, piperazine or morpholine ring, which can be unsubstituted or substituted by alkyl of 1 to 4 carbon atoms, the piperazine ring being optionally substituted in the 4-position also by hydroxyalkyl of 1 to 4 carbon atoms; Z_1 is hydrogen, alkyl of 1 to 6 carbon atoms, alkoxy of 1 to 6 carbon atoms, alkenyloxy of 3 to 6 carbon atoms, hydroxyalkyl of 2 to 4 carbon atoms, alkoxyalkyl containing a total of 3 to 8 carbon atoms, benzyloxy, phenethoxy, halogen, phenoxy, phenoxyalkoxy containing 1 to 3 carbon atoms in the alkyl moiety, or is the group

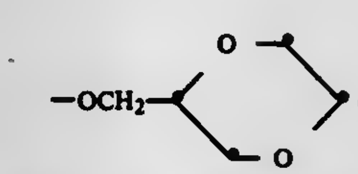

Z_2 is hydrogen, alkyl of 1 to 4 carbon atoms, alkoxy of 1 to 4 carbon atoms or halogen, or Z_1 and Z_2 in the ortho-position to each other together are also the methylenedioxy, ethylenedioxy or methyleneoxymethyleneoxy radical.

4,302,587
6-(1-METHYLHYDRAZINO)ISOCYTOSINE
Robert W. Morrison, Jr.; William R. Mallory, and Virgil L. Styles, all of Raleigh, N.C., assignors to Burroughs Wellcome Co., N.C.
Division of Ser. No. 922,545, Jul. 7, 1978, Pat. No. 4,225,710. This application May 27, 1980, Ser. No. 153,058
Claims priority, application United Kingdom, Jul. 8, 1977, 28765/77
Int. Cl.³ C07D *239/36*
U.S. Cl. 544—320 **1 Claim**

1. A compound of the formula (IV):

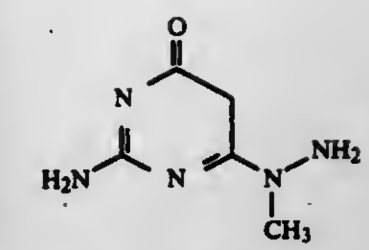

(IV)

tautomers thereof and salts thereof.

4,302,588
CARBOSTYRIL COMPOUNDS
Michiaki Tominaga; Hitoshi Tone, and Kazuyuki Nakagawa, all of Tokushima, Japan, assignors to Otsuka Pharmaceutical Co., Ltd., Tokyo, Japan
Continuation-in-part of Ser. No. 778,537, Mar. 17, 1977, abandoned. This application Nov. 30, 1978, Ser. No. 965,469
Claims priority, application Japan, Mar. 17, 1976, 51/28957; May 7, 1976, 51/52498
The portion of the term of this patent subsequent to Jul. 1, 1997, has been disclaimed.
Int. Cl.³ C07D *215/22;* **A61K** *31/47*
U.S. Cl. 546—158 **7 Claims**

1. A carbostyril compound represented by the formula (I):

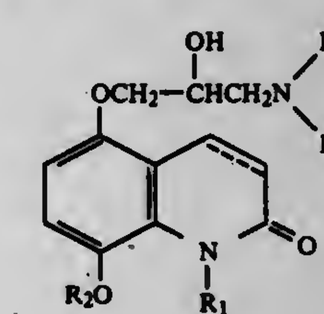

(I)

wherein R_1 represents a hydrogen atom or a straight or branched chain alkyl group having 1 to 6 carbon atoms, R_2 represents a hydrogen atom, a straight or branched chain alkyl group having 1 to 6 carbon atoms or a phenylalkyl group selected from the group consisting of monophenylalkyl and diphenylalkyl groups having a straight or branched chain alkyl group having 1 to 6 carbon atoms in the alkyl moiety, R_3 represents a hydrogen atom and R_4 represents a phenylalkyl group selected from the group consisting of monophenylalkyl and diphenylalkyl groups having a straight or branched chain alkyl group having 1 to 6 carbon atoms in the alkyl moiety thereof or a phenoxyalkyl group having a straight or branched alkylene group of 1 to 6 carbon atoms in the alkyl moiety thereof, the 3,4-bond of the carbostyril nucleus represents a single or double bond, said phenylalkyl or phenoxyalkyl being unsubstituted or having 1 to 3 substituents being selected from the group consisting of alkyl groups having 1 to 4 carbon atoms, alkoxy groups having 1 to 4 carbon atoms, halogen atoms, alkylene dioxy groups having 1 to 2 carbon atoms, a carbamoyl group and a substituted or unsubstituted phenyl group, and the pharmaceutically acceptable acid addition salts thereof.

4,302,589
CIS-MONO AND DISUBSTITUTED-2-METHYL-3-[(PIPERAZINYL) AND (PIPERIDINO)ETHYL]INDOLINES, INTERMEDIATES FOR THEIR PREPARATION AND METHODS OF PREPARATION

William J. Fanshawe; Thomas C. McKenzie, both of Pearl River, N.Y., and Lantz S. Crawley, Clifton, N.J., assignors to American Cyanamid Company, Stamford, Conn.

Filed May 8, 1980, Ser. No. 147,806
Int. Cl.[3] A61K *31/445*; C07D *211/14*
U.S. Cl. 546—201 5 Claims

1. The compound cis-5-fluoro-2-methyl-3-[2-(4-phenylpiperidino)ethyl]indoline dihydrochloride.

3. A compound selected from those of the formula:

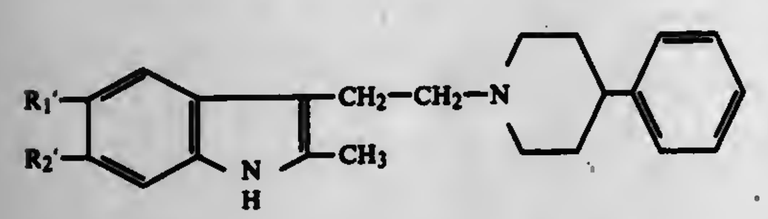

wherein R'_1 is selected from the group comprising fluorine and methoxy and R'_2 is hydrogen and methoxy, and the pharmacentically acceptable salts thereof.

4,302,590
INTERMEDIATES FOR THE PREPARATION OF 4-ARYLOXY-3-PHENYLPIPERIDINES

Solomon S. Klioze, Flemington, and Frederick J. Ehrgott, Bernardsville, both of N.J., assignors to Hoechst-Roussel Pharmaceuticals, Inc., Somerville, N.J.

Division of Ser. No. 14,548, Feb. 23, 1979, Pat. No. 4,216,218. This application Dec. 28, 1979, Ser. No. 108,211
Int. Cl.[3] C07D *211/46*
U.S. Cl. 546—216 7 Claims

1. A compound of the formula

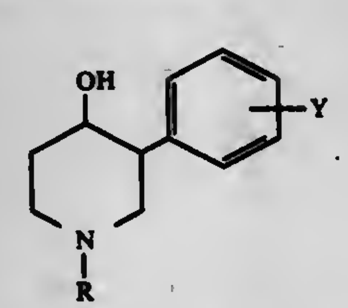

or a salt thereof in which R is hydrogen, methyl, lower alkanoyl, cycloloweralkylloweralkanoyl, cycloloweralkylloweralkyl, loweralkenyl, loweralkynyl,

wherein R_1 is loweralkyl, loweralkenyl or CH_2CCl_3, or

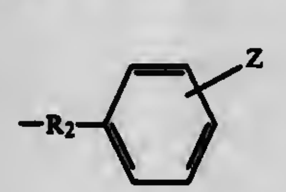

where Z is hydrogen, halogen, loweralkyl, loweralkoxy, hydroxy, nitro or amino and R_2 is loweralkylene, oxyloweralkylene, loweralkylenecarbonyl, carbonylloweralkylene or

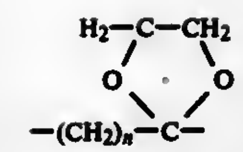

wherein n is 1, 2 or 3 and Y is hydrogen, loweralkyl, halogen, hydroxy, nitro, amino, acetamido, trifluoromethyl or cyano.

4,302,591
ANTIHYPERTENSIVE AMINES

James R. Shroff, Riverside, Conn., and Bernard Loev, Scarsdale, N.Y., assignors to USV Pharmaceutical Corporation, Tuckahoe, N.Y.

Filed Sep. 2, 1980, Ser. No. 182,885
Int. Cl.[3] C07D *401/04, 401/14, 211/82*
U.S. Cl. 546—257 19 Claims

1. An antihypertensive compound of the formula:

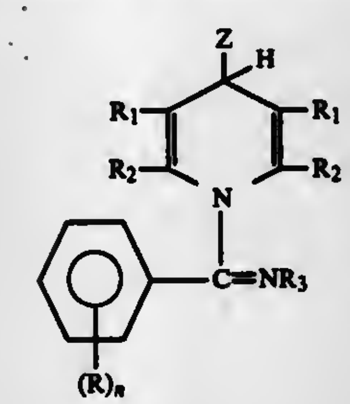

wherein,
Z is

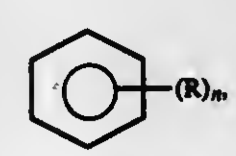

cycloalkyl, or pyridyl wherein R and 'n' are as defined herein;
each R is independently hydrogen, alkyl, alkenyl, alkynyl, cycloalkyl, aryl, aralkyl, sulfonamido, halogen, alkoxy, alkenyloxy, alkynyloxy, cyano, hydroxy, acyloxy, nitro, amino, alkylmercapto, alkylamino, alkanoylamino, carbalkoxyamino, carboxy, methanesulfonyl, carbalkoxy or trifluoromethyl;
each R_1 is cyano or COR_4 wherein R_4 is hydroxy, alkoxy, alkyl, alkenyl, alkynyl, alkylamino, amino, cycloalkyl, or alkoxyalkoxy;
each R_2 and R_3 is alkyl, alkenyl, alkynyl, cycloalkyl, pyridyl or

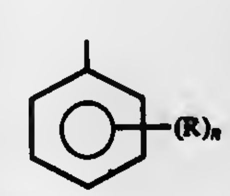

wherein R and "n" are as defined herein;
and $n = 0-3$
wherein in Z, R, R_1, R_2 and R_3 the hydrocarbyl radical contains up to 7 carbon atoms when it is alkyl, alkenyl, alkynyl or cycloalkyl and up to 10 carbon atoms when aryl;
and acid addition salts thereof.

4,302,592
PESTICIDAL 3-(2,3-DIHYDROBENZOFURAN-7-yl)-5-METHOXY-1,3,4-OXADIAZOL-2(3H)-ONE

Charles H. Tieman, Modesto, Calif., assignor to Shell Oil Company, Houston, Tex.

Filed Sep. 15, 1980, Ser. No. 187,240
Int. Cl.[3] A01N *43/82*; C07D *271/10*
U.S. Cl. 548—144 1 Claim

1. 3-(2,3-dihydrobenzofuran-7-yl)-5-methoxy-1,3,4-oxadiazol-2(3H)-one.

4,302,593
INTERMOLECULAR COMPOUNDS OF AMINO ACIDS AND SULFOXIDES AND METHOD OF PREPARING SAME

Orville G. Lowe, 120-D W. Santa Fe Ave., Santa Fe, N. Mex. 87501

Continuation-in-part of Ser. No. 869,811, Jan. 16, 1978, abandoned, which is a continuation-in-part of Ser. No. 653,517, Jan. 29, 1976, abandoned, which is a continuation-in-part of Ser. No. 532,722, Dec. 13, 1974, Pat. No. 3,948,922, which is a continuation-in-part of Ser. No. 320,070, Jan. 2, 1973, abandoned. This application Mar. 31, 1980, Ser. No. 135,663
Int. Cl.[3] C07D *333/48*; C07C *143/15*
U.S. Cl. 549—29 15 Claims

1. An intermolecular compound of a saturated aliphatic amino acid of the empirical formula $C_nH_{2n-1}(NH_2)(CO_2H)(SO_3H)$, wherein n is a small whole number no greater than about 4, with a di-loweralkyl sulfoxide in which each alkyl group contains up to about 6 carbon atoms and each alkyl group may be the same or different and may be bonded together to form a ring structure, said amino acid having a solubility of about 4 grams or more per 100 milliliters of the sulfoxide at a temperature of about 25° C., the amino acid and sulfoxide being present in the intermolecular compound at a molar ratio of sulfoxide to said amino acid ranging from about 0.2:1 to 1:1.

10. The intermolecular compound of claim 1 wherein the sulfoxide is tetramethylene sulfoxide.

4,302,594
PROCESS FOR OBTAINING SILANE DERIVATIVES OF SEPIOLITE BY REACTION WITH ALKOXY-SILANES TO IMPROVE THEIR REINFORCING CAPACITY IN POLYMERS

Antonio Alvarez Berenguer; Fernando R. Sanchez Montero, and Juan J. Aragon Martinez, all of Madrid, Spain, assignors to Tolsa, S. A., Madrid, Spain

Filed Mar. 24, 1980, Ser. No. 132,832
Claims priority, application Spain, Jun. 28, 1979, 482.033
Int. Cl.[3] C07F *7/10, 7/08, 7/18*
U.S. Cl. 556—425 9 Claims

1. A process for obtaining silane derivatives of sepiolite by reaction with alkoxy-silanes, characterized by the steps of contacting finely-divided sepiolite in hydrated form with a vaporized alkoxy-silane in countercurrent vertical flow at temperatures between room temperature and the normal boiling point of the alkoxy-silane, followed by heating the sepiolite at 110° C. to remove the reaction byproducts.

4,302,595
PROCESS FOR THE PREPARATION OF TEREPHTHALIC ACID BY THE HYDROLYSIS OF INTERMEDIATE STAGE CRUDE DIMETHYL TEREPHTHALATE

Anton Schoengen, Witten; Georg Schreiber, Cologne, and Heinz Schroeder, Witten, all of Fed. Rep. of Germany, assignors to Dynamit Nobel Aktiengesellschaft, Troisdorf, Fed. Rep. of Germany

Filed Sep. 27, 1979, Ser. No. 79,253
Claims priority, application Fed. Rep. of Germany, Apr. 21, 1979, 2916197
Int. Cl.[3] C07C *51/09*
U.S. Cl. 562—483 8 Claims

1. A process for the preparation of fiber-grade terephthalic acid from an intermediate stage crude dimethyl terephthalate obtained from a crude ester mixture produced by the oxidation of p-xylene and/or methyl p-toluate with oxygen-containing gases in the presence of a heavy-metal-containing oxidation catalyst at an elevated temperature and under an elevated pressure; and by the esterification of the oxidation mixture with methanol at elevated temperature and elevated pressure, which comprises separating the resulting crude ester mixture by distillation into a methyl p-toluate-enriched fraction, a residual high boiling fraction, and a crude dimethyl terephthalate having a limited content of intermediate oxidation products including terephthalaldehydic-acid methyl ester and other by-products, the content of terephthalaldehydic acid methyl ester being limited up to 0.1% by weight based on the weight of the crude dimethyl terephthalate; subsequently hydrolyzing the crude dimethyl terephthalate with water at a weight ratio of the crude dimethyl terephthalate to water of between 3:1 and 0.1:1, and at temperatures of between 140° C. and 350° C. and under the pressure required to maintain the liquid phase to produce a reaction mixture containing crystalline fiber-grade terephthalic acid and then recovering the terephthalic acid from the reaction mixture; said hydrolysis of the crude dimethyl terephthalate being conducted in at least two stages, wherein in the first hydrolysis stage, a mixture of the crude dimethyl terephthalate and water is passed cocurrently through a first reactor column and a portion of terephthalic acid formed by hydrolysis is crystallized from the reaction mixture at temperatures of between 300° and 150° C., a suspension of terephthalic acid crystals in a mother liquid is separated from the reaction mixture and introduced into the second hydrolysis stage and the remaining portion of the reaction mixture containing methanol and water is discharged from the first hydrolysis stage; and in the second hydrolysis stage demineralized water is passed countercurrently to the suspension of terephthalic acid crystals in the mother liquor in a second reactor column, whereby the mother liquor is constantly diluted, replaced by the demineralized water, the motor liquor is withdrawn from the top of the second reactor column, and additional terephthalic acid is formed and crystallized within the length of the second reactor column during the continual hydrolysis.

4,302,596
13,14-DIDEHYDRO-11-DEOXY-9-DEOXY-9-METHYLENE-19-OXO-PGF$_2$ COMPOUNDS

John C. Sih, Kalamazoo, Mich., assignor to The Upjohn Company, Kalamazoo, Mich.

Division of Ser. No. 25,879, Apr. 2, 1979. This application Mar. 20, 1980, Ser. No. 131,974
Int. Cl.[3] C07C *177/00*
U.S. Cl. 562—503 4 Claims

1. A compound of the formula

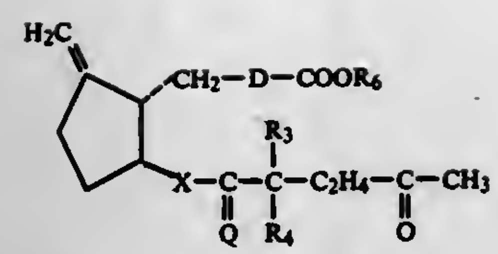

wherein D is
(1) cis—CH═CH—CH$_2$—(CH$_2$)$_g$—CH$_2$—,
(2) cis—CH═CH—CH$_2$—(CH$_2$)$_g$—CF$_2$—,
(3) cis—CH$_2$—CH═CH—CH$_2$—CH$_2$—, or
(4) trans—(CH$_2$)$_3$—CH═CH—;
wherein g is zero, one, two, or three;
wherein Q is α-OH:β-R$_5$ or α-R$_5$:β-OH, wherein R$_5$ is hydrogen or methyl;
wherein R$_6$ is
(a) hydrogen,
(b) alkyl of one to 12 carbon atoms, inclusive,
(c) cycloalkyl of 3 to 10 carbon atoms, inclusive,
(d) aralkyl of 7 to 12 carbon atoms, inclusive,
(e) phenyl,
(f) phenyl substituted with one, 2, or 3 chloro or alkyl groups of one to 3 carbon atoms, inclusive,
(g) —(p-Ph)—CO—CH$_3$,
(h) —(p-Ph)—NH—CO—(p-Ph)—NH—CO—CH$_3$,
(i) —(p-Ph)—NH—CO—(p-Ph),
(j) —(p-Ph)—NH—CO—CH$_3$,
(k) —(p-Ph)—NH—CO—NH$_2$,
(l) —(p-Ph)—CH═N—NH—CO—NH$_2$,
(m) β-naphthyl,
(n) —CH$_2$—CO—R$_{28}$,
wherein (p-Ph) is para-phenyl or inter-para-phenylene, wherein R$_{28}$ is phenyl, p-bromophenyl, p-biphenylyl, p-nitrophenyl, p-benzamidophenyl, or 2-naphthyl, or
(o) a pharmacologically acceptable cation;
wherein R$_3$ and R$_4$ are hydrogen, methyl, or fluoro, being the same or different, with the proviso that one of R$_3$ and R$_4$ is fluoro only when the other is hydrogen or fluoro; and
wherein X is —C≡C—.

4,302,597
METHOD FOR THE HYDRATION OF ACRYLONITRILE TO ACRYLAMIDE
Giovanni Manara; Vittorio Fattore, and Bruno Notari, all of San Donato Milanese, Italy, assignors to Snamprogetti, S.p.A., Milan, Italy
Continuation of Ser. No. 878,775, Feb. 17, 1978, abandoned, which is a continuation of Ser. No. 731,991, Oct. 13, 1976, abandoned. This application Aug. 1, 1979, Ser. No. 62,618
Claims priority, application Italy, Oct. 17, 1975, 28384 A/75
Int. Cl.^{3} C07C *103/133*
U.S. Cl. 564—127 **4 Claims**
1. A method for the hydration of acrylonitrile to acrylamide comprising the step of carrying out the reaction by starting with an aqueous reaction mixture in which the ratio of water to acrylonitrile is in the range of from 1 to 30 mols of water per mol of acrylonitrile, at a temperature in the range of from 20° C. to 200° C. and in the presence of a catalyst based on copper obtained by reacting an organic chelate of copper with an aluminum alkyl and/or hydride.

4,302,598
RECYCLING CATALYST IN PREPARATION OF DIMETHYLFORMAMIDE FROM DIMETHYLAMINE AND CARBON MONOXIDE
Harold E. Bellis, Wilmington, Del., assignor to E. I. Du Pont de Nemours and Company, Wilmington, Del.
Filed Dec. 17, 1980, Ser. No. 217,504
Int. Cl.^{3} C07C *102/00*
U.S. Cl. 564—132 **1 Claim**
1. In the catalytic preparation of dimethylformamide from dimethylamine and carbon monoxide using an alkali metal methylate as the catalyst, the improvement which permits recycling and reuse of the catalyst, which improvement comprises the continuous presence of dimethylamine in the reaction mass at a concentration of at least 0.1%, by weight, in excess of the stoichiometric amount.

4,302,599
PROCESS FOR NITRATING ANILIDES
Lydia Peer, West Orange, N.J., and Joseph Mayer, New York, N.Y., assignors to Schering Corporation, Kenilworth, N.J.
Filed Sep. 10, 1979, Ser. No. 73,838
Int. Cl.^{3} C09B *87/60, 91/06*
U.S. Cl. 564—146 **11 Claims**
1. The process for para nitrating a meta-substituted anilide wherein the meta-substituent is selected from the group consisting of lower alkyl, lower acyl, polyfluoro lower alkyl, nitrogen and halogen; which comprises subjecting said meta-substituted anilide to a mixed acid solution consisting of nitric acid and oleum wherein the reaction temperature is maintained at from about −20° C. to about 50° C., the nitric acid is present at from about 1 to about 4.5 moles per mole of anilide and the oleum is present at from about 1.5 to about 10 milliliters per gram of anilide.

4,302,600
PROCESS FOR THE PURIFICATION OF AN AQUEOUS ACRYLAMIDE SOLUTION
Jun Saitoh; Kenzo Fujii; Toshimi Nakagawa, all of Kamakura; Tadatoshi Honda, Fujisawa; Takatoshi Mitsuishi, Isehara, and Hiroshi Itoh, Yokohama, all of Japan, assignors to Mitsui Toatsu Chemicals Incorporated, Tokyo, Japan
Filed May 21, 1980, Ser. No. 151,777
Claims priority, application Japan, May 28, 1979, 54-64943
Int. Cl.^{3} C07C *103/133*
U.S. Cl. 564—206 **4 Claims**
1. A process for the purification of a crude aqueous acrylamide solution obtained by catalytic hydration of acrylonitrile with water, through a dual treatment first with a strongly acidic cation exchange resin and then with a weakly basic anion exchange resin, which comprises passing the crude aqueous acrylamide solution through a bed of a strongly acidic cation exchange resin, followed by a bed of a weakly basic anion exchange resin containing tertiary amino groups, and further through a bed of a weakly basic anion exchange resin containing primary and/or secondary amino groups, said resin containing primary and/or secondary amino groups being discarded after its use without any regenerating treatment.

4,302,601
AROMATIC KETONES HAVING CARDIOVASCULAR ACTIVITY
Henri Demarne, Montpellier, France, assignor to C M Industries, Paris, France
Continuation of Ser. No. 781,490, Mar. 25, 1977, abandoned, which is a continuation of Ser. No. 590,727, Jun. 26, 1975, abandoned. This application Mar. 12, 1980, Ser. No. 129,730
Claims priority, application United Kingdom, Feb. 28, 1974, 28925/74
Int. Cl.^{3} C07C *93/06*
U.S. Cl. 564—351 **1 Claim**
1. A compound selected from the group consisting of 5-fluoro-2-(2-hydroxy-3-tertiary butylamino-propoxy)-butyrophenone, its optical isomers and non-toxic acid addition salts thereof.

4,302,602
2-(N,N-DIMETHYLAMINO) INDAN-1,3-DIONE AND METHOD FOR MANUFACTURE THEREOF
Masaaki Ito, Hokkaido, Japan, assignor to Hokkaido Sugar Co., Ltd., Tokyo, Japan
Filed Jul. 8, 1980, Ser. No. 166,788
Claims priority, application Japan, Jul. 17, 1979, 54-89885
Int. Cl.^{3} C07C *87/28*
U.S. Cl. 564—428 **3 Claims**
1. 2-(N,N-dimethylamino) indan-1,3-dione.

4,302,603
PRODUCING ALKYLAMINES FROM OLEFINS WITH ALKALI METAL AMIDE CATALYST
Guido P. Pez, Boonton, N.J., assignor to Allied Chemical Corporation, Morris Township, Morris County, N.J.
Filed Dec. 18, 1980, Ser. No. 217,937
Int. Cl.^{3} C07C *85/18*
U.S. Cl. 564—485 **12 Claims**
1. A process for the production of alkylamines which comprises reacting a monoolefin with ammonia in the presence of an alkali metal amide catalyst wherein the alkali metal amide catalyst is selected from the group consisting of cesium amide, rubidium amide, mixtures of alkali metal amides which are at least 25 mole percent cesium or rubidium amide and mixtures of amides melting below the reaction temperature.

4,302,604
INCREASING THE LIFE OF A SUPPORTED RUTHENIUM CATALYST IN THE HYDROGENATION OF AN OLEFINICALLY UNSATURATED DINITRILE
Stanley J. Marwil, Bartlesville, Okla., assignor to Phillips Petroleum Company, Bartlesville, Okla.
Filed Jul. 24, 1980, Ser. No. 171,921
Int. Cl.^{3} C07C *85/12*
U.S. Cl. 564—491 **11 Claims**
1. In a single-stage process for the reduction of olefinically unsaturated dinitriles to saturated diamines by contacting a supported ruthenium catalyst, olefinically unsaturated dinitrile, hydrogen, diluent, and ammonia as secondary amine suppressant, under effective hydrogenation conversion run conditions of contacting temperature in the range of about 100° C. to 170° C., and contacting pressure in the range of about 1500 to 2500 psia, the improvement which comprises increasing the run life of said supported ruthenium catalyst by initially contacting said supported ruthenium catalyst, olefinically unsaturated dinitrile, hydrogen, diluent, and ammonia at a low contacting pressures in the range of about 900 to 1300 psig for a start-up interval of 1 to about 160 hours at a start-up temperature in the range of about 100° C. to 120° C., and thereafter gradually increasing the operating pressure over an interval of about 24 to 48 hours to said run operating pressure, thereby increasing the run life of said supported ruthenium catalyst for said single-step reduction process.

4,302,605
PROCESS FOR THE MANUFACTURE OF DIMETHYL SULFIDE
Bernard Buchholz, Whitpain, and Edward J. Dzierza, Philadelphia, both of Pa., assignors to Pennwalt Corporation, Philadelphia, Pa.
Filed Apr. 18, 1980, Ser. No. 141,707
Int. Cl.^{3} C07C *149/10*
U.S. Cl. 568—60 **16 Claims**
1. A continuous vapor-phase process for preparing C_1–C_{12} dialkyl sulfide that comprises reacting a C_1–C_{12} alkanol and hydrogen sulfide at elevated temperature in the presence of a zeolite catalyst having pore openings in the range of from about 7 to about 10 Angstroms, said zeolite catalyst being Type X, Type Y or Type L and containing less than 10% by weight alkali metal, expressed as Na_2O.

4,302,606
2-HYDROXY,ALKOXY,METHYLOLBENZOPHENONE INTERMEDIATE COMPOUNDS FOR THE MANUFACTURE OF IMPROVED COPOLYMERIZABLE ULTRAVIOLET LIGHT ABSORBER COMPOUNDS
Eugene S. Barabas, Watchung; Prakash Mallya, Bloomingdale, and Stanley J. Gromelski, W. Caldwell, all of N.J., assignors to GAF Corporation, New York, N.Y.
Filed May 23, 1980, Ser. No. 153,107
Int. Cl.^{3} C07C *49/83*
U.S. Cl. 568—333 **2 Claims**
1. A 2-hydroxy-3,5-dimethylol-4-alkoxybenzophenone compound having the formula:

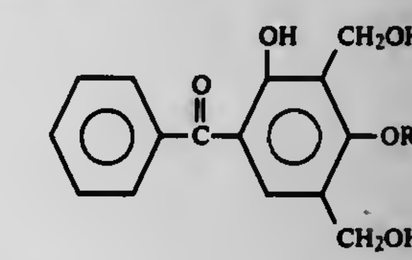

where R is C_1–C_8.

4,302,607
PROCESS FOR THE PREPARATION OF NOVEL UNSATURATED MACROCYCLIC KETONES
George H. Büchi, and Hans Wüest, both of Cambridge, Mass., assignors to Firmenich SA, Geneva, Switzerland
Continuation-in-part of Ser. No. 11,685, Feb. 12, 1979, abandoned. This application Sep. 19, 1979, Ser. No. 76,960
Int. Cl.^{3} C07C *45/62, 45/45*
U.S. Cl. 568—352 **4 Claims**
1. A process for the preparation of macrocyclic ketones of formula

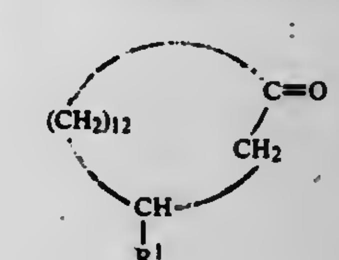

(IV)

wherein R^1 represents a lower alkyl radical or a hydrogen atom, which comprises
a. reacting in the presence of a basic reagent a dialdehyde of formula

$$\begin{array}{ll} CH_2-(H)_nC & (H)_nC-(CH_2)_2-CHO \\ | & \\ CH_2-(H)_nC & (H)_nC-(CH_2)_2-CHO \end{array} \qquad (II)$$

possessing two single or two double bonds in the positions indicated by the dotted lines and wherein index n stands for integer 1 or 2, with a diphosphonate of formula

$$(RO)_2-\overset{O}{\overset{\|}{P}}-CH_2-\overset{O}{\overset{\|}{C}}-CH_2-\overset{O}{\overset{\|}{P}}(OR)_2 \qquad (III)$$

wherein each of symbols R represents an alkyl radical, to give an unsaturated macrocyclic ketone of formula

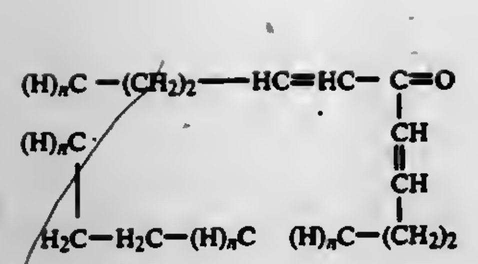

(I)

b. catalytically hydrogenating the thus obtained ketone to give cyclopentadecanone, or
c. alkylating the ketone of formula (I) obtained in step a. in order to obtain the compound of formula

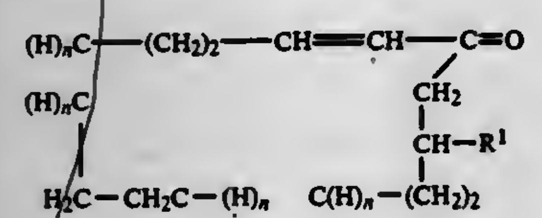

(V)

wherein R^1 represents a lower alkyl radical and index n stands for integer 1 or 2, and
d. catalytically hydrogenating compound (V) to give an alkylated macrocyclic ketone of formula

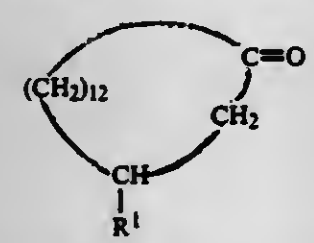

(IV)

wherein R^1 has the meaning given for formula (V).

4,302,608

PROCESS FOR THE ISOMERIZATION OF HEXAFLUOROPROPYLENE OXIDE TO HEXAFLUOROACETONE

Edward N. Squire, Glen Mills, Pa., assignor to E. I. Du Pont de Nemours and Company, Wilmington, Del.

Filed Aug. 20, 1980, Ser. No. 179,812

Int. Cl.³ C07C 45/58

U.S. Cl. 568—384 10 Claims

1. A process for the isomerization of hexafluoropropylene oxide to hexafluoroacetone comprising contacting in a reactor, at a temperature of about 10°-200° C., a stream of gaseous hexafluoropropylene oxide at an absolute pressure of about 0.103–13.79 MPa with a catalyst consisting essentially of liquid antimony pentafluoride adsorbed on a solid support; hexafluoroacetone being removed from the reactor at essentially the same rate as it is formed; and a portion of the reactor close to the hexafluoroacetone removal point being cooled to prevent loss of antimony pentafluoride.

4,302,609

PROCESS FOR THE MANUFACTURE OF METHYLGLYOXAL

Herbert Baltes, Frankfurt am Main, and Ernst I. Leupold, Neu-Anspach, both of Fed. Rep. of Germany, assignors to Hoechst Aktiengesellschaft, Frankfurt am Main, Fed. Rep. of Germany

Filed Jul. 3, 1980, Ser. No. 165,693

Claims priority, application Fed. Rep. of Germany, Jul. 7, 1979, 2927524

Int. Cl.³ C07C 45/32, 47/127

U.S. Cl. 568—471 7 Claims

1. A process for the continuous manufacture of methylglyoxal which comprises passing glycerol, in the gaseous phase, over a heterogeneous dehydrogenation catalyst containing a catalytically effective amount of at least one element selected from the group consisting of vanadium, molybdenum, tungsten, cooper, silver, tin, lead, antimony, bismuth and iron said process being conducted at a temperature in the range of 100° to 600° C. and a pressure in the range of 0.01 to 100 bars in the presence of oxygen or an oxygen-containing gas.

4,302,610

VANADIUM CONTAINING NIOBATES AND TANTALATES

William C. Conner, Jr., Montague, Mass.; Stuart L. Soled, Madison, N.J.; Anthony J. Signorelli, Saccasunna, N.J., and Bruce A. DeRites, Wayne, N.J., assignors to Allied Corporation, Morris Township, Morris County, N.J.

Filed May 27, 1980, Ser. No. 153,483

Int. Cl.³ C07C 27/12, 45/32, 49/04

U.S. Cl. 568—475 16 Claims

1. A method for producing oxidation products selected from the group consisting of alcohols, aldehydes, ketones and mixtures thereof from alkanes, comprises reacting an alkane at elevated temperatures within the range from about 300° C. to 600° C. with oxygen in the presence of a catalyst comprising a host-phase selected from the group consisting of niobates and tantalates of divalent and trivalent metals and containing vanadium from about 1 atom percent to the limit of solid solubility in the host phase.

4,302,611

PREPARATION OF ACETALDEHYDE

Richard V. Porcelli, Yonkers, N.Y., assignor to Halcon Research & Development Corp., New York, N.Y.

Continuation-in-part of Ser. No. 974,290, Dec. 29, 1978, abandoned. This application Sep. 16, 1980, Ser. No. 187,691

Int. Cl.³ C07C 47/06, 45/49

U.S. Cl. 568—484 6 Claims

1. A process for the preparation of acetaldehyde which comprises continuously reacting methyl acetate and/or dimethyl ether with carbon monoxide and hydrogen in a reaction zone containing a palladium catalyst and an iodine moiety at a temperature of at least about 100° C. and under a pressure of at least about 25 psig, the liquid reaction mixture being maintained under continuous boiling conditions, whereby a vaporous reaction product mixture is produced from the boiling liquid reaction mixture, and continuously removing said vaporous mixture from said reaction zone.

4,302,612

SYNTHESIS OF PERFLUORODIALDEHYDES

David H. Evans, and Richard B. Greenwald, both of Cambridge, Mass., assignors to Polaroid Corporation, Cambridge, Mass. Division of Ser. No. 705,411, Jul. 15, 1976, abandoned, which is a continuation-in-part of Ser. No. 595,489, Jul. 14, 1975, abandoned. This application Jan. 26, 1978, Ser. No. 872,614

Int. Cl.³ C07C 43/12, 41/01, 29/00

U.S. Cl. 568—604 9 Claims

1. A method which comprises reacting 1 equivalent of a compound of the formula ROOC—$(CF_2)_x$—COOR wherein R is alkyl having 1 to 4 carbon atoms and x is a positive integer 2 to 12 with about 1 to 1.5 equivalents of sodium bis-(2-methoxyethoxy)aluminum hydride at a temperature below about −40° C. in a solution of (a) toluene or benzene and (b) an alkyl ether having a freezing point below said reaction temperature and isolating the reaction product, said reaction product being a compound of the formula

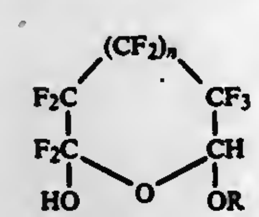

wherein n is 0 or 1 when said x is less then 4 and said reaction product being a compound of the formula

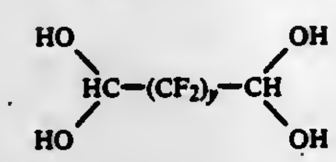

wherein y is 4 to 12 when x is at least 4.

4,302,613

INORGANIC CATALYST FOR ALKOXYLATION OF ALCOHOLS

Kang Yang; Gerald L. Nield, and Paul H. Washecheck, all of Ponca City, Okla., assignors to Conoco Inc., Ponca City, Okla.

Filed Aug. 22, 1980, Ser. No. 180,236

Int. Cl.³ C07C 41/03

U.S. Cl. 568—618 22 Claims

1. A method for the alkoxylation of alcohols containing from about 2 to about 36 carbon atoms, comprising carrying out said alkoxylation by contacting said alcohols with an alkoxylating agent in the presence of basic strontium-containing or barium-containing materials together with an effective amount of an inorganic co-catalyst selected from the group consisting of calcium oxide, calcium carbide, calcium hydroxide, magnesium metal, aluminum metal, zinc oxide, and magnesium hydroxide, and wherein the alkoxylation reaction is carried out at temperatures of from about 120° C. to about 260° C.

4,302,614

2,2-BIS[4-(2,3-DIBROMOPROPOXY)-3,5-DIBROMO-PHENYL]-PROPANE PROCESS

Wolfgang Dannenberg, Wunstorf; Walter Heyer, Barsinghausen; Theo Döldissen, Seelze, and Manfred Zimmermann, Hanover, all of Fed. Rep. of Germany, assignors to Riedel-de Haen Aktiengesellschaft, Hanover, Fed. Rep. of Germany

Filed Feb. 11, 1980, Ser. No. 120,331

Claims priority, application Fed. Rep. of Germany, Feb. 13, 1979, 2905397

Int. Cl.³ C07C 41/01

U.S. Cl. 568—641 12 Claims

1. A process for the manufacture of 2,2-bis[4-(2,3-dibromopropoxy)-3,5-dibromophenyl]-propane by reaction of 2,2-bis[4-hydroxy-3,5-dibromophenyl]-propane with an allyl halide in an alcoholic solution and bromination of the allyl ether obtained with bromine, which comprises (a) reacting 2,2-bis[4-hydroxy-3,5-dibromophenyl]-propane with the allyl halide in solution in a mixture of water and a lower aliphatic alcohol, (b) removing the lower aliphatic alcohol, (c) dissolving the allyl ether obtained according to (b) in an aromatic halogenated hydrocarbon and removing the water, without further workup of the allyl ether after it is dissolved in the aromatic halogenated hydrocarbon in step (c), (d) brominating the allyl ether with bromine (e) removing the excess bromine, (f) washing the thus obtained brominated allyl ether solution obtained according to (e) with water, (g) precipitating the brominated allyl ether by means of a lower aliphatic alcohol, and subsequently separating it.

4,302,615

SYNTHESIS OF 2-ALKOXYPHENOLS

John D. Hagarty, Sturtevant, Wis., assignor to S. C. Johnson & Son, Inc., Racine, Wis.

Filed Aug. 5, 1980, Ser. No. 175,475

Int. Cl.³ C07C 41/01, 41/28

U.S. Cl. 568—652 8 Claims

1. Process for producing a 2-alkoxyphenol of the formula

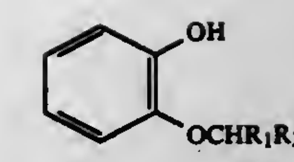

which comprises: conducting a reductive hydrogenolysis with a metal hydride in the presence of a Lewis acid of a 2-alkyl-1,3-benzodioxole of the formula:

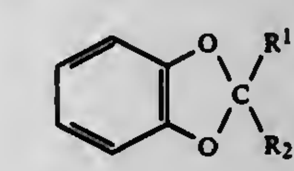

wherein R_1 and R_2 are the same or different and R_1 is H or lower alkyl and R_2 is lower alkyl.

4,302,616

METHOD FOR MAKING ALKALI METAL BISPHENOXIDE SALTS AND BISIMIDES DERIVED THEREFROM

Frank J. Williams, III, Scotia, and Brent A. Dellacoletta, Clifton Park, both of N.Y., assignors to General Electric Company, Schenectady, N.Y.

Division of Ser. No. 37,442, May 9, 1979, Pat. No. 4,257,953. This application Sep. 5, 1980, Ser. No. 184,476

Int. Cl.³ C07C 39/12, 39/16

U.S. Cl. 568—722 5 Claims

1. A method for making an anhydrous alkali metal phenoxide salt of the formula,

$R^1(OM)_a$,

which comprises refluxing and vigorously stirring in a reaction vessel, a heterogenous mixture of a nonpolar organic solvent having a boiling point in the range of 80° C. to 200° C. at 760 torr and an aqueous solution of a phenol of the formula,

$R^1(OH)_a$,

and substantially stoichiometric equivalents of such phenol and an alkali metal hydroxide and scraping the inside walls of the reaction vessel to effect the separation of water in the form of an azeotrope from the resulting mixture until it is substantially anhydrous, where R^1 is a $C_{(6-30)}$ aromatic organic radical, M is an alkali metal ion, a is an integer equal to 1 or, and when a is 1, R^1 is monovalent and when a is 2, R^1 is divalent.

4,302,617

CONVERSION OF ETHYL CHLORIDE TO VINYL CHLORIDE

Tao P. Li, Chesterfield, Mo., assignor to Monsanto Co., St. Louis, Mo.

Filed Dec. 2, 1977, Ser. No. 856,840

Int. Cl.³ C07C 17/24

U.S. Cl. 570—230 11 Claims

1. A process for producing monohalogenated olefins which comprises dehydrogenating in the presence of oxygen a haloalkane containing 2 to 6 carbon atoms and at least two hydrogen atoms on adjacent carbon atoms at a temperature in the range from about 400° to about 700° C. in contact with a catalyst comprising a halide of copper and an alkali metal phosphate on an inorganic support.

4,302,618
TRACTION FLUID

Paul H. Washecheck, Ponca City, Okla., assignor to Conoco Inc., Ponca City, Okla.

Continuation-in-part of Ser. No. 23,574, Mar. 26, 1979, abandoned. This application Apr. 28, 1980, Ser. No. 143,977
Int. Cl.³ C10G *1/02, 1/06*

U.S. Cl. 585—1 12 Claims

1. A traction fluid composition which is the product obtained by hydrogenation of a hydrocarbon composition containing at least 40 weight percent diphenylalkanes said diphenylalkanes being represented by the formula

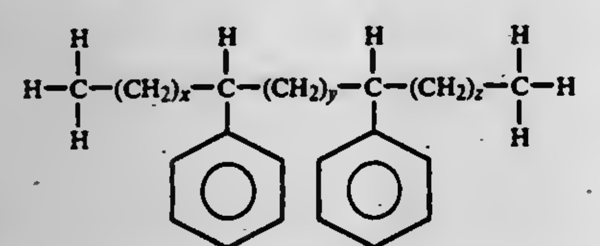

wherein x, y and z are integers in the range of 0 to 14, with the sum of x, y and z being in the range of 6 to 18, said diphenylalkanes being characterized further in that x and z are 0 in at least 5 weight percent thereof, the remaining hydrocarbons in said composition having a boiling range similar to the diphenylalkanes, said hydrocarbon composition having a boiling range of about 300° to 450° C. at atmospheric pressure.

4,302,619
CONTROL OF CO EMISSIONS IN A PROCESS FOR PRODUCING GASOLINE FROM METHANOL

Benjamin Gross, Cherry Hill, N.J., and Sterling E. Voltz, Media, Pa., assignors to Mobil Oil Corporation, New York, N.Y.

Filed Jan. 4, 1980, Ser. No. 156,284
Int. Cl.³ C07C *1/20*; B01J *29/28*

U.S. Cl. 585—408 15 Claims

1. In a process for the catalytic conversion of methanol to produce products boiling in the motor fuel range, wherein said methanol is contacted with a porous acidic solid catalyst comprising a crystalline aluminosilicate zeolite having a pore diameter greater than about 5 Angstroms, a silica-to-alumina ratio of at least 12, and a constraint index within the range of 1-12 at elevated temperatures, in a reaction vessel at conversion conditions including elevated temperatures and the absence of added hydrogen so as to convert said methanol to lower molecular weight products with deposit on said catalyst of a deactivating solid carbonaceous contaminant resulting from said conversion, the so deactivated catalyst being transferred to a regeneration vessel in which oxidation of said carbonaceous deposit proceeds in the presence of air with generation of carbon monoxide and carbon dioxide and the regenerated catalyst at elevated temperature is transferred from said regeneration vessel to said reaction vessel to catalyze further conversion, the improvement which comprises:

conducting said conversion and said regeneration with an inventory of said solid, porous, acidic solid catalyst particles and particles of an oxidation catalyst selected from the group consisting of copper chromite, cobalt chromite, or mixtures thereof and limiting the concentration of said oxidation catalyst to an amount great enough to promote oxidation of CO and inadequate to substantially affect the dealkylation of aromatics in said reaction vessel as compared with a like catalyst free of such metal, said amount being less than 500 ppm based on total catalyst inventory.

2. The process of claim 1 wherein said crystalline aluminosilicate is ZSM-5.

3. The process of claim 1 wherein said crystalline aluminosilicate is ZSM-11.

4,302,620
REACTIONS INVOLVING ZEOLITE CATALYSTS MODIFIED WITH GROUP IV A METALS

Chin-Chiun Chu, North Brunswick, N.J., assignor to Mobil Oil Corporation, New York, N.Y.

Filed Oct. 29, 1980, Ser. No. 201,683
Int. Cl.³ C07C *2/68, 5/22, 5/52*

U.S. Cl. 585—467 22 Claims

1. A process for conversion of organic compounds, said process comprising contacting said organic compounds with a crystalline zeolite catalyst at a temperature of between about 250° C. and about 750° C. and a pressure within the approximate range of 10^5N/m² to 10^7N/m², said zeolite being characterized by a silica to alumina mole ratio of at least 12 and a constraint index within the approximate range of 1 to 12, said zeolite having undergone prior modification by treatment with one or more compounds containing elements of Group IV A to deposit thereon at least 0.5 weight percent of such element.

14. The process of claim 1, 2, 3, 4, 5, 6, 7, 8, 9, 10, 11, 12, or 13 wherein said conversion comprises the alkylation of an aromatic compound by contacting said compound with an alkylating agent to produce dialkylbenzene compounds wherein the 1,4-dialkylbenzene isomer is present in excess of its normal equilibrium concentration.

17. The process of claim 1, 2, 3, 4, 5, 6, 7, 8, 9, 10, 11, 12, or 13 wherein said conversion comprises the transalkylation of aromatic compounds to produce dialkylbenzene compounds wherein the 1,4-dialkylbenzene isomer is present in excess of its normal equilibrium concentration.

4,302,621
SHAPE SELECTIVE REACTIONS UTILIZING ZEOLITES MODIFIED WITH GROUP V A METALS

Chin-Chiun C. Chu, North Brunswick, N.J., assignor to Mobil Oil Corporation, New York, N.Y.

Filed Oct. 29, 1980, Ser. No. 201,899
Int. Cl.³ C07C *2/68, 5/22, 5/52*

U.S. Cl. 585—467 25 Claims

1. A process for conversion of organic compounds, said process comprising contacting said organic compounds with a crystalline zeolite catalyst at a temperature of between about 250° C. and about 750° C. and a pressure within the approximate range of 10^5N/m² to 10^7N/m², said zeolite being characterized by a silica to alumina mole ratio of at least 12 and a constraint index within the approximate range of 1 to 12, said zeolite having undergone prior modification by treatment with compounds containing one or more of the elements of Group V A of the Periodic Chart, to deposit thereon at least 0.25 weight percent of such element.

14. The process of claim 1, 2, 3, 4, 5, 6, 7, 8, 9, 10, 11, 12 or 13, wherein said conversion comprises the alkylation of an aromatic compound by contacting said compound with an alkylating agent to produce dialkylbenzene compounds wherein the 1,4-dialkylbenzene isomer is present in excess of its normal equilibrium concentration.

17. The process of claim 14 wherein said zeolite is ZSM-11.

4,302,622
SHAPE SELECTIVE REACTIONS UTILIZING GROUP III A METAL-MODIFIED ZEOLITE CATALYST

Chin-Chiun Chu, North Brunswick, N.J., assignor to Mobil Oil Corporation, New York, N.Y.

Filed Dec. 2, 1980, Ser. No. 212,067
Int. Cl.³ C07C *2/68, 5/22, 5/52*

U.S. Cl. 585—467 22 Claims

1. A process for conversion of organic compounds, said process comprising contacting said organic compounds with a crystalline zeolite catalyst at a temperature of between about 250° C. and about 750° C. and a pressure within the approximate range of 10^5N/m² to 10^7N/m², said zeolite being characterized by a silica to alumina mole ratio of at least 12 and a constraint index within the approximate range of 1 to 12, said

zeolite having undergone prior modification by treatment with one or more compounds containing metal elements, chosen from Group III A of the Periodic Table of Elements, to deposit thereon at least 0.5 weight percent of such element.

14. The process of claim 1, 2, 3, 4, 5, 6, 7, 8, 9, 10, 11, 12 or 13 wherein said conversion comprises the alkylation of an aromatic compound by contacting said compound with an alkylating agent to produce dialkylbenzene compounds wherein the 1,4-dialkylbenzene isomer is present in excess of its normal equilibrium concentration.

17. The process of claim 1, 2, 3, 4, 5, 6, 7, 8, 9, 10, 11, 12 or 13 wherein said conversion comprises the transalkylation of aromatic compounds to produce dialkylbenzene compounds wherein the 1,4-dialkylbenzene isomer is present in excess of its normal equilibrium concentration.

4,302,623
ULTRASONIC BATCH SENSING APPARATUS FOR GLASS-MELTING FURNACES
Sheldon A. Canfield, Newark, Ohio, assignor to Owens-Corning Fiberglass Corporation, Toledo, Ohio
Filed Nov. 19, 1979, Ser. No. 95,882
Int. Cl.³ C03B *3/00*
U.S. Cl. 13—6 **10 Claims**

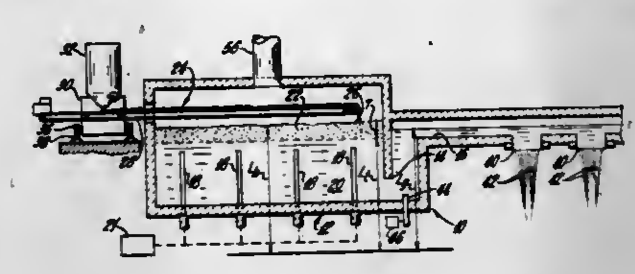

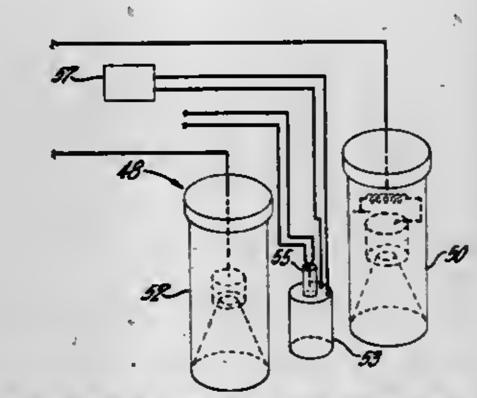

1. An apparatus for sensing the level of the glass batch in a glass-melting furnace, said apparatus comprising:
a. means for transmitting an ultrasonic signal toward the surface of said batch in said furnace;
b. means for receiving said ultrasonic signal after said signal has been reflected by said surface; and
c. means for disturbing a thermal inversion layer in the path of said wave in the gaseous medium between said means for transmitting and said surface, said means for transmitting, said means for receiving and said means for disturbing being positioned above said batch.

4,302,624
ELECTRIC WALL OUTLET PROTECTOR
Fredric M. Newman, 29040 Apple Blossom La., Farmington Hills, Mich. 48018
Filed May 16, 1980, Ser. No. 150,557
Int. Cl.³ H02G *3/14*
U.S. Cl. 174—67 **8 Claims**

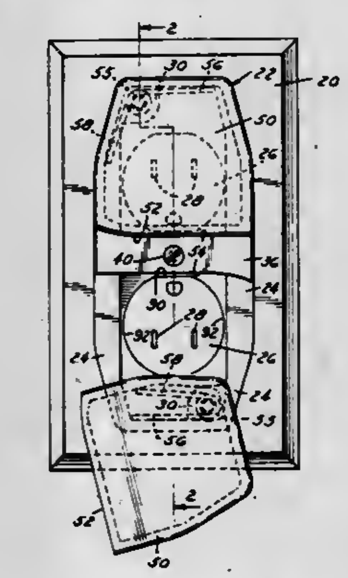

1. A protector device for electrical wall outlets for preventing access by children which comprises:
(a) a shallow perimeter wall lying between spaced parallel planes dimensioned to encompass one or more electrical outlet sockets,
(b) a cross bar bridging opposed walls of said perimeter and positioned to lie over a threaded retention hole in a wall socket and having a screw hole to register with said retention hole,
(c) a closure plate on said perimeter wall to overlie each outlet socket encompassed by said wall,
(d) means to mount each said closure plate on and outside said perimeter wall to pivot on an axis normal to the said parallel planes for pivotal movement only from a closed position overlying an outlet socket, the perimeter of each said closure plate overlying the said perimeter wall in closed position except for that portion adjacent said cross bar, to a position exposing said outlet socket, and
(e) resilient means associated with said wall and each said closure plate to bias said closure plate to a closed position.

4,302,625
MULTI-LAYER CERAMIC SUBSTRATE
Richard J. Hetherington, Pine Plains; George E. Melvin, Poughkeepsie; Stephen A. Milkovich, Beacon, and Ernest N. Urfer, Hopewell Junction, all of N.Y., assignors to International Business Machines Corp., Armonk, N.Y.
Filed Jun. 30, 1980, Ser. No. 164,645
Int. Cl.³ H05K *1/14*
U.S. Cl. 174—68.5 **4 Claims**

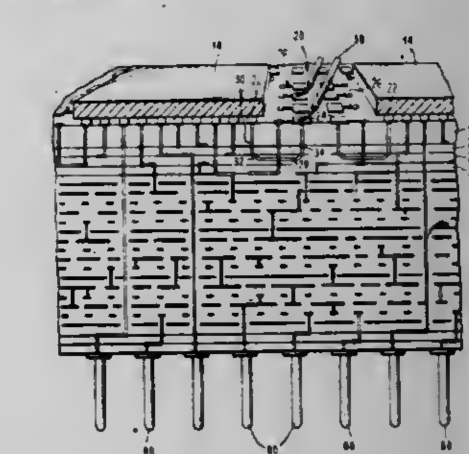

1. An improved multi-layer ceramic substrate for maintaining a plurality of semiconductor devices in a semiconductor package comprising
a monolithic sintered ceramic substrate formed of a plurality of ceramic green sheets,
said substrate having a plurality of sheets having redistribution metallurgy patterns including vias located on the top portion of the substrate, said layers each having a thickness in the range of 4.5–6.5 mils,
an overlying top sheet having a thickness of at least 20% greater than the individual thicknesses of the said underlying sheets having redistribution metallurgy patterns,
said top sheet having a via pattern filled with a conductive metal wherein said vias have a center to center spacing in the range of 7 to 12 mils, with the via diameter being in the range of 35 to 55% of the center to center via spacing,
said sintered ceramic substrate and said conductive metal in said vias having a difference of coefficient of expansion of at least 0.8×10^{-6}/°C.

4,302,626
LOW FREQUENCY AM STEREOPHONIC BROADCAST AND RECEIVING APPARATUS
Robert D. Streeter, Fort Wayne, Ind., assignor to Magnavox Consumer Electronics Company, New York, N.Y.
Filed Mar. 21, 1977, Ser. No. 779,392
Int. Cl.³ H04H *5/00*
U.S. Cl. 179—1 GS5 **7 Claims**

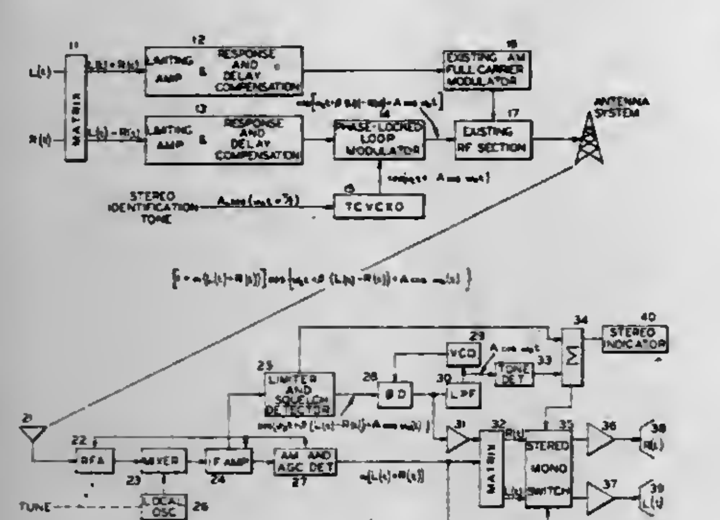

1. A receiving apparatus for removing stereophonic information contained in a broadcast signal comprising:
(a) means for providing a broadcast signal, said broadcast signal having a phase linearly modulated with a first audio signal, and amplitude modulated with a second audio signal, and frequency modulated with a third low frequency audio signal;
(b) detector means for supplying a signal proportional to the amplitude modulation of said broadcast signal;
(c) phase detector means for providing a signal proportional to the variation in phase of said broadcast signal; and
(d) means for providing a signal proportional to the variation in frequency of said broadcast signal.

4,302,627
DENTAL STETHOSCOPE
Noboru Inoue, Tokyo, Japan, assignor to Kabushiki Kaisha Dental Electronics Kenkyujo, Tokyo, Japan
Filed Apr. 28, 1980, Ser. No. 144,487
Claims priority, application Japan, Aug. 9, 1979, 54-101430
Int. Cl.³ A61C *19/04*
U.S. Cl. 179—1 ST **2 Claims**

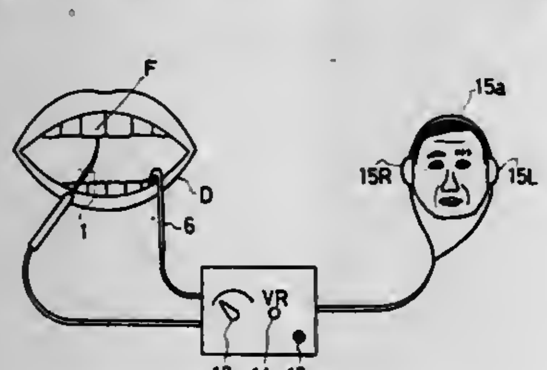

1. A dental stethoscope characterized in that a measurement channel oscillator and a reference channel oscillator are provided in combination, a measurement probe and a mouth mucose lead element are respectively connected to said measurement channel oscillator, while at least one of equivalent circuits each consisting of an equivalent capacitor and an equivalent resistor connected in parallel to each other is selectively connected to said reference channel oscillator, said respective equivalent circuits corresponding to different stages of a decayed tooth, and the outputs of said measurement channel oscillator and said reference channel oscillator are respectively connected to the respective channels of a stereo headphone.

4,302,628
ANALOG SIGNAL ENCRYPTING AND DECRYPTING SYSTEM
Charles Akrich, Meudon; Jean C. Lemaire, Aulnay-sous-Bois; Michel J. Maillard, Ivry, and Michel Ruiz, Paris, all of France, assignors to Etablissement Publre Telediffusion de France, Paris, France
Filed Apr. 14, 1980, Ser. No. 139,675
Claims priority, application France, Apr. 20, 1979, 79 10092
Int. Cl.³ H04K *1/06*
U.S. Cl. 179—1.5 S **5 Claims**

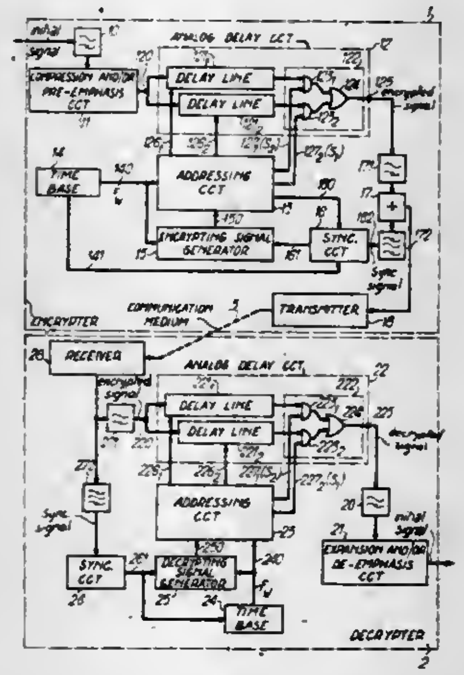

1. An encrypting and decrypting system for encrypting an analog incoming signal into an analog encrypted signal and for decrypting said analog encrypted signal into an analog decrypted signal analogous to said incoming signal, said encrypting and decrypting system comprising:
first analog means receiving said incoming signal for time delaying 2 N analog samples of said incoming signal;
first writing means for producing first clock pulses at a predetermined period F_W which control the writing and sampling operations of N successive samples of said incoming signal in said first time delaying means during a first period NT_W;
first reading means comprising pulse sequence producing means for producing an encrypting signal having N pulses per period equal to NT_W, said N encrypting signal pulses controlling the in series reading operation of said N successive samples of said incoming signal in said first time delaying means during a second period NT_W following said first period thereby obtaining said analog encrypted signal and said N encrypting signal pulses being time distributed according to a predetermined distribution in each of said periods NT_W thereby obtaining N encrypted signal samples having undergone at least a time compression and eventually a time expansion with regard to the regular time distribution of said N incoming signal delayed samples;
second analog means receiving said encrypted signal for time delaying 2 N analog samples of said encrypted signal;
second writing means comprising pulse sequence producing means for producing a decrypting signal synchronized with and identical to said encrypting signal, the N decrypting signal pulses controlling the writing operation of the N successive samples of said encrypted signal in said second time delaying means during said first period NT_W and said N decrypting signal pulses being time distributed according to said predetermined distribution;
means for addressing said pulse sequence producing means in either said first reading means or in said second writing means thereby selecting an encrypting signal or a decrypting signal, each of said first reading means and said second writing means having means for periodically producing a sequence of pulses, the N first of which being said N encrypting signal pulses or said N decrypting signal pulses;
means for counting N pulses of said sequence during each period NT_W of said encrypting or decrypting signal;
means controlling by said counting means for locking during each period NT_W said reading operation in said first reading means or said writing operation in said second writing means after the n^{th} pulse of said sequence until the start of the following period NT_W;
synchronizing means controlling by said locking means or receiving a synchronizing signal from said locking means of said first reading means for resetting to zero said counting means and for triggering said pulse sequence producing means; and
second reading means for producing second clock pulses at said predetermined period T_W which are synchronized with said first clock pulses and control the reading operation of the N successive encrypted signal samples in said second time delaying means during said period NT_W thereby obtaining said analog decrypted signal.

4,302,629
DIGITAL DATA TRANSMISSION SYSTEM
John D. Foulkes, Kirkland; David K. Worthington, Bellevue, both of Wash., and John E. Trombly, Winchester, Mass., assignors to Teltone Corporation, Kirkland, Wash.
Continuation-in-part of Ser. No. 20,252, Mar. 14, 1979. This application Aug. 1, 1979, Ser. No. 62,720
Int. Cl.³ H04M *11/00*
U.S. Cl. 179—2 DP **17 Claims**

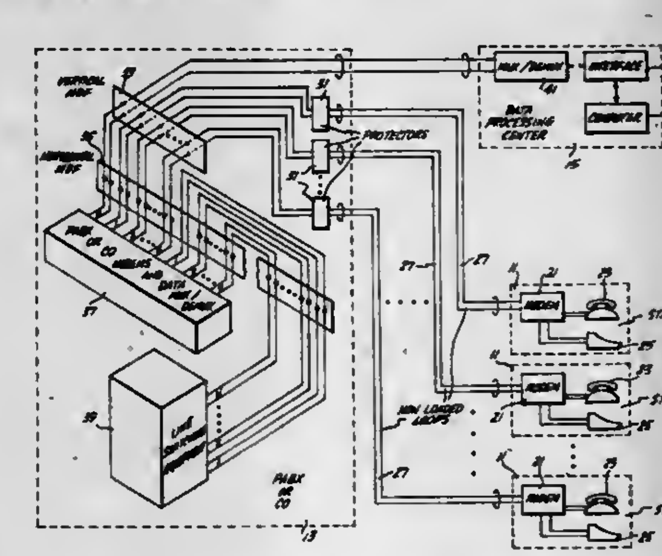

1. In a transmission system for carrying baseband telephone signals, said transmission system including telephone switching equipment connected to telephones via nonloaded loops, the improvement comprising a digital data transmission system for carrying digial data over said nonloaded loops without interfering with the baseband signals carried by said nonloaded loops, said digital data transmission system comprising:
(A) station modems connected between telephones located in the vicinity of associated data terminals and the telephone end of related nonloaded loops running to said telephone switching equipment, said station modems also connected to said associated data terminal, each of said station modems including:
(1) transmitting means for converting digital data produced by said associated data terminal from binary signal form into FSK signal form such that a binary zero (0) causes said FSK signal to have a first frequency, F1, and a binary one (1) causes said FSK signal to have a second frequency, F2, and applying said F1 and F2 FSK signals to said related nonloaded loop;
(2) receiving means for receiving digital data carried by said related nonloaded loop in FSK signal form at third, F3, and fourth, F4, frequencies and converting said F3 and F4 FSK digital data into binary form such that an FSK signal at said third frequency, F3, causes a binary zero (0) and an FSK signal at said fourth frequency, F4, causes a binary one (1) and applying said binary digital data to said associated data terminal; and,
(3) voice filter means for connecting said related nonloaded loop to said telephone so as to prevent said F1, F2, F3 and F4 FSK signals from reaching said telephone; and,
(B) a switching equipment subsystem located in the vicinity of said telephone switching equipment and connected to the other ends of said nonloaded loops, said switching equipment subsystem comprising:
(1) modem means connected to the other ends of said nonloaded loops for:
(a) converting said F1 and F2 FSK signals applied to said nonloaded loops by said transmitting means of said station modems from FSK signal form into binary digital data form such that an F1 FSK signal causes a binary zero (0) and an F2 FSK signal causes a binary one (1);
(b) converting binary digital data received from a bidirectional signal forwarding means into FSK signal form such that a binary zero (0) causes said FSK signal to have said third frequency, F3, and a binary one (1) causes said FSK signal to have said fourth frequency, F4, and applying said F3 and F4 FSK signals to said nonloaded loops; and,
(c) voice filter means for connecting the other ends of said nonloaded loops to line switching equipment forming part of said telephone switching equipment so as to prevent said F1, F2, F3 and F4 FSK signals from reaching said line switching equipment; and,
(2) bidirectional signal forwarding means connected to said modem means for:
(a) receiving the binary digital data produced by said modem means resulting from the conversion of said F1 and F2 FSK signals from FSK signal form into binary digital data form and forwarding said binary digital data to a data processing center; and,
(b) receiving binary digital data produced by said data processing center and applying said binary digital data to said modem means for conversion by said modem means from binary digital data form into F3 and F4 FSK signal form.

4,302,630
TELEPHONIC ANSWERING DEVICE
Alessandro Imgegnoli, Milan, and Corona Ennio, Piacenza, both of Italy, assignors to International Standard Electric Corporation, New York, N.Y.
Filed Nov. 14, 1979, Ser. No. 94,123
Claims priority, application Italy, Feb. 1, 1979, 19770 A/79
Int. Cl.³ H04M *1/64*
U.S. Cl. 179—6.07 **5 Claims**

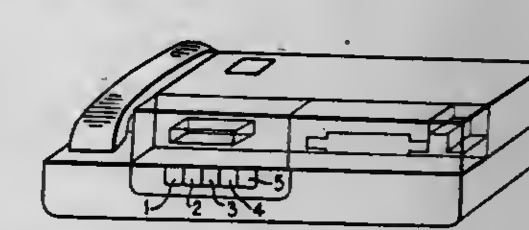

1. A telephonic answering device effective to operate according to a plurality of modes, including announcement recording and playback modes, telephonic message recording and playback modes, a remotely controlled message playback

mode, and a tone sending mode that sends a plurality of time spaced tones to initiate said remotely controlled playback mode in accordance with a preselected voice code,

comprising in combination,

announcement and message recording means for recording announcements and telephonic messages and playing back said announcements and telephonic messages respectively,

first and second means for driving said announcement and message recording means in either forward or reverse directions respectively,

a variable-time voice coding means to control the initiation of said telephonic answering device in said remotely controlled playback mode,

said voice coding means being responsive to voice sounds of the calling party enunciated during time intervals between said spaced tones to initiate said telephonic message playback mode,

said voice coding means responding to said voice sounds to vary said time intervals between adjacent tones.

4,302,631

DECIMATOR APPARATUS FOR DECREASING THE WORD RATE OF A DIGITAL SIGNAL OF THE TYPE EMPLOYED IN DIGITAL TELEPHONE SYSTEMS

Kishan Shenoi, Fairfield; Bhagwati P. Agrawal, Shelton, and Larry K. I. Chu, Norwalk, all of Conn., assignors to International Telephone and Telegraph Corporation, New York, N.Y.

Filed Nov. 28, 1979, Ser. No. 98,094

Int. Cl.³ H04B *1/66*; G06F *3/00*

U.S. Cl. 179—15.55 R **26 Claims**

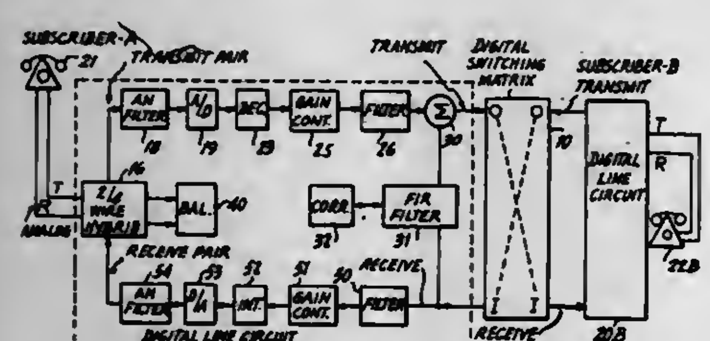

1. A decimator apparatus for decreasing the word rate of an input digital signal, said input digital signal consisting of a plurality of digital words, each having the same number of given bits, with said rate of said digital signal being of a predetermined value fs, comprising:

a cascaded digital filter arrangement having an input terminal and an output terminal, with a finite impulse response (FIR) filter in cascade with and coupled to the input of a second order digital low pass recursive filter between said input and output terminals, said recursive filter characterized in having a transfer function defining filter coefficients to be of the form 2^{-K}, where K is an integer, to permit filtering of said input digital signal as applied to the input terminal of said cascaded arrangement, to provide at said output terminal, an output filtered digital signal having a plurality of digital words each of a greater number of bits than said input words and at a rate equal to said predetermined rate, and

register means responsive to said output signal from said recursive filter of said greater number of bit words for transferring said output signal at a lower rate than said predetermined rate whereby said register means provides at an output, a decimated signal having a plurality of words, each of a greater bit length than said input words and each manifesting the weighted value of said input words at a decreased word rate.

4,302,632

DIGITALLY-CONTROLLED TELEPHONE ANSWERING SWITCHING SYSTEM

Ronald P. Vicari, Elmwood Park, N.J., and Barry Yampol, Oyster Bay, N.Y., assignors to Graphic Scanning, Inc., Englewood, N.J.

Division of Ser. No. 733,357, Oct. 18, 1976, which is a division of Ser. No. 591,233, Jun. 27, 1975, Pat. No. 3,987,252, which is a continuation-in-part of Ser. No. 392,634, Aug. 29, 1973, abandoned. This application Jul. 27, 1979, Ser. No. 61,273

Int. Cl.³ H04M *3/50*; H04Q *3/60*

U.S. Cl. 179—27 FH **11 Claims**

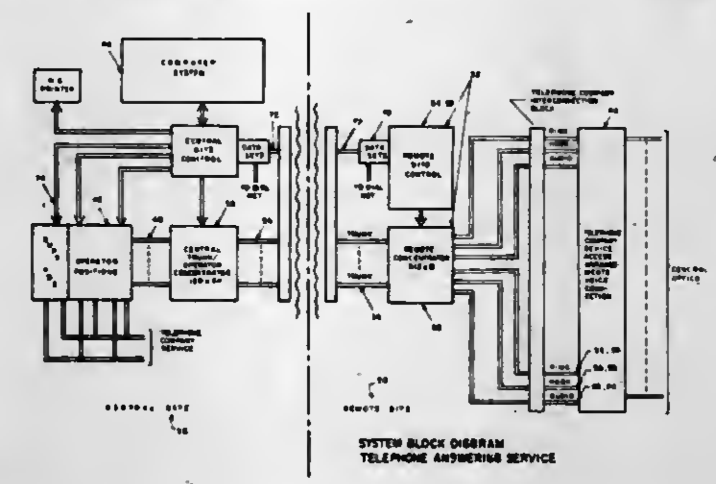

1. A digitally controlled telephone answering switching system serving the subscribers of at least one telephone company central office comprising:

(a) a remote site in close geographic proximity to said telephone company central office;

(b) a central site at which the telephones of subscribers are actually answered;

(c) a plurality of incoming telephone lines of subscribers at said remote site;

(d) at least one remote site concentrator and associated control unit located at said remote site and responsive to said plurality of incoming telephone lines;

(e) a plurality of trunk lines connecting said remote site concentrator to said central site;

(f) a plurality of operator positions at said central site each including telephone receiving and transmitting means for answering calls;

(g) line scanning means included in said remote site control unit coupled to said plurality of incoming telephone lines for scanning each of said incoming lines to determine whether the line should be answered and switched to one of said plurality of trunk lines;

(h) address decoding and switching means included in said remote site control unit coupled to said line scanning means and responsive to a digitally coded address for causing a switching connection in said remote site concentrator from a subscriber line to be answered via one connecting path of a plurality of connecting paths to a given trunk line;

(i) said digital computer means at said central site including table look-up means for determining from among the plurality of connecting paths a free answering path through the remote site concentrator and also including address generation means for generating a digitally coded address defining said free answering path through the remote site concentrator; and

(j) data transmission means connected between said address generation means and said remote site control unit for transmitting said digitally coded address to said control unit, whereby a call to be answered is switched to said central site;

(k) said digital computer means also causing a switching connection at said central site from said given trunk line to an available operator position selected by said digital computer means so that an operator can answer the call.

4,302,633

ELECTRODE PLATE ELECTRET OF ELECTRO-ACOUSTIC TRANSDUCER AND ITS MANUFACTURING METHOD

Junichi Tamamura, Yao; Yoshiyuki Murakami, Habikino, and Akira Terada, Ikeda, all of Japan, assignors to Hosiden Electronics Co., Ltd., Osaka, Japan

Filed Mar. 28, 1980, Ser. No. 134,806

Int. Cl.³ H04R *19/00, 31/00*

U.S. Cl. 179—111 E **10 Claims**

9. An electrode plate electret for an electrostatic type electro-acoustic transducer, comprising:

an electrode plate;

a polarized high molecular film; and

an intermediate high molecular film sandwiched between the electrode plate and the polarized high molecular film and fusion-welded to both of them, the intermediate high molecular film having a lower melting point than the polarized high molecular film.

4,302,634

SPRING FORCE BIASING MEANS FOR A CAPACITANCE-TYPE ELECTROSTATIC TRANSDUCER

Richard Paglia, Carlisle, Mass., assignor to Polaroid Corporation, Cambridge, Mass.

Filed May 5, 1980, Ser. No. 146,311

Int. Cl.³ H04R *19/00*

U.S. Cl. 179—111 R **10 Claims**

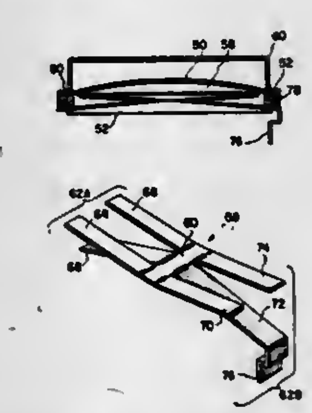

1. An electrostatic transducer assembly comprising:

a housing having a hollow interior;

a vibratile diaphragm extending across said interior of said housing with a peripheral region of said diaphragm maintained in fixed relation to said housing;

a backplate positioned within said housing; and

means for urging said backplate into cooperative engagement with said diaphragm, said urging means including a biasing member located within said housing adjacent the side of said backplate opposite said diaphragm and extending across the interior of said housing, said member having at least a pair of resilient end sections, each of said end sections having a first portion in engagement with said housing and a second portion in engagement with a peripheral region of said backplate, at least one of said first or second portions being bent away from the other portion in a plane generally normal to said backplate so as to bias said backplate toward said diaphragm.

4,302,635

HEADPHONE CONSTRUCTION

Wayno A. Jacobsen, Shorewood, Wis., and James P. Thomsen, Mt. Prospect, Ill., assignors to Koss Corporation, Milwaukee, Wis.

Filed Jan. 4, 1980, Ser. No. 109,504

Int. Cl.³ H04M *1/05*; H04R *1/10*

U.S. Cl. 179—156 R **18 Claims**

1. A headphone, the combination comprising:

an ear plate having acoustic openings distributed in a pattern around a sound emitting axis which passes through the ear plate;

an acoustic transducer disposed against the back surface of the ear plate and aligned over the acoustic openings;

first snap action fastening means for fastening the acoustic transducer to the ear plate, said first snap action fastening means having elements which are integrally formed on the ear plate and acoustic transducer;

a back plate disposed against the back surface of the ear plate to form an ear cup assembly which surrounds the acoustic transducer;

second snap action fastening means for fastening the back plate to the ear plate, said second snap action fastening means having elements which are integrally formed on the ear plate and back plate;

a headband for supporting the ear cup assembly over the ear of a listener; and

means for attaching the ear cup assembly to the headband.

4,302,636

SUBSCRIBER'S ELECTRONIC LINE EQUIPMENT COMPRISING A TWO-WIRE-FOUR-WIRE CONVERSION CIRCUIT FOR A TELEPHONE EXCHANGE

Alian Dumont, Montceau-les Mines; Christian Piolat, Villeurbanne, and Guy Oeillet, Montceau-les Mines, all of France, assignors to Jeumont-Schneider, Puteaux, France

PCT No. PCT/FR78/00024, § 371 Date May 27, 1979, § 102(e) Date May 24, 1979, PCT Pub. No. WO79/00158, PCT Pub. Date Apr. 5, 1979

PCT Filed Sep. 19, 1978, Ser. No. 101,863

Claims priority, application France, Sep. 27, 1977, 77 29048

Int. Cl.³ H04B *1/58*

U.S. Cl. 179—170 NC **3 Claims**

1. A subscriber's electronic line equipment comprising a two-wire-four-wire conversion circuit for a telephone exchange, characterized in that it comprises:

a d.c. voltage source (8) having its positive terminal connected to a chassis,

a first transistor (10) having its base connected to the transmission output (4) of the telephone exchange (7), its emitter connected to said chassis by a first resistor (11) and its collector connected to the negative terminal of a d.c.

voltage source (8) by a second resistor (9) having a resistance equal to the resistance of said first resistor (11),

a second transistor (12) having its base connected to the emitter of the first transistor (10), its collector connected to said chassis and its emitter connected to a first wire (1) of the subscriber's line by a third resistor (13),

a third transistor (14) having its base connected to the collector of the first transistor (10), its collector connected to the negative terminal of the voltage source (8) and its emitter connected to a second wire (2) of the subscriber's line by a fourth resistor (15) having a resistance equal to the

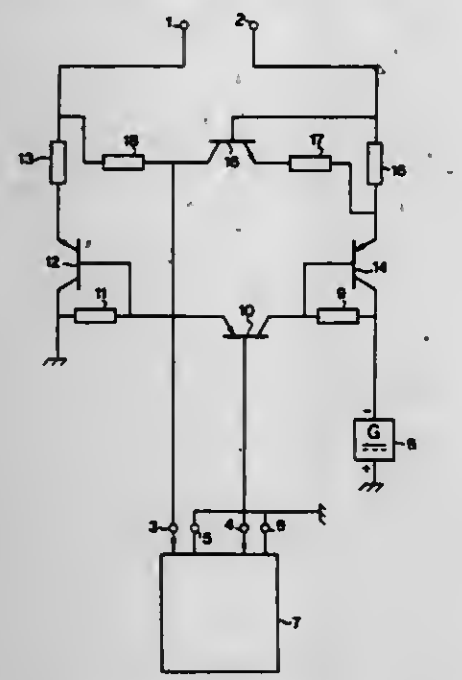

resistance of said third resistor and equal to half the total impedance of the line and the subscriber's set, the second transistor (12) being of the opposite polarity-type from the third transistor (14),

a fourth transistor (16) having its base connected to the second wire (2) of the subscriber's set, its emitter connected to the emitter of the third transistor (14) by a fifth resistor (17) and its collector connected (a) to the first wire (1) of the subscriber's line by a sixth resistor (18) having a resistance equal to the resistance of said fifth resistor, and (b) to the receiving input (3) of the telephone exchange (7).

4,302,637

HERMETICALLY SEALED SWITCH ASSEMBLY

Albert F. Ditzig, Hoffman Estates, Ill., assignor to Molex Incorporated, Lisle, Ill.

Filed Jan. 26, 1979, Ser. No. 6,566

Int. Cl.³ H01H *15/24*

U.S. Cl. 200—6 R **4 Claims**

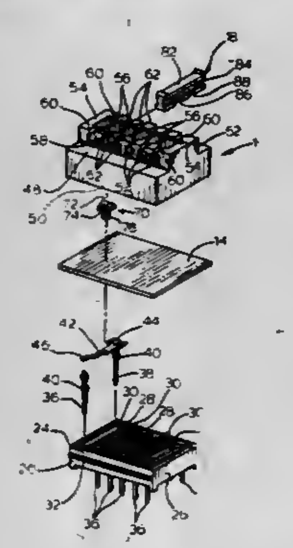

1. In a switch assembly including a base member having a contact receiving, cavity open at the top and defined by a floor that is laterally enclosed by side wall means, first terminal means in the cavity adapted for electrical connection to outside circuitry, second terminal means in the cavity adapted for electrical connection to outside circuitry having a resilient contact blade portion with an end spaced from said first terminal means, said contact blade portion being moveable between a normally open position wherein said end is spaced from said first terminal means and a closed position wherein said end contacts said first terminal means, a cover mounted on said base member having means for mounting an actuator assembly thereon, and an actuator assembly mounted on the mounting means of the cover actuable for moving said contact blade portion between its open and closed positions, the improvement comprising:

a thin, stretchable, resilient, impermeable sealing gasket on said base member which overlies said cavity;

said cover engaging the periphery of said gasket, and including interengaging means cooperating with said base member to lock said cover and gasket to said base member to form a hermetic seal over said cavity; and

said actuator assembly including a push member mounted for general up and down movement against the gasket, said actuator assembly being moveable between an off position wherein the push member is in an up position and said contact blade portion is in the open position and an on position wherein the push member is moved against the resilient force of the gasket to push the contact blade portion to the closed position.

4,302,638

VENTING SYSTEM FOR AN INTERNAL COMBUSTION ENGINE IGNITION DISTRIBUTOR

David H. Fox, Ann Arbor, and Charles C. Kostan, Canton, both of Mich., assignors to Ford Motor Company, Dearborn, Mich.

Filed Dec. 14, 1979, Ser. No. 103,676

Int. Cl.³ H01H *19/00;* F02P *1/00*

U.S. Cl. 200—19 R **4 Claims**

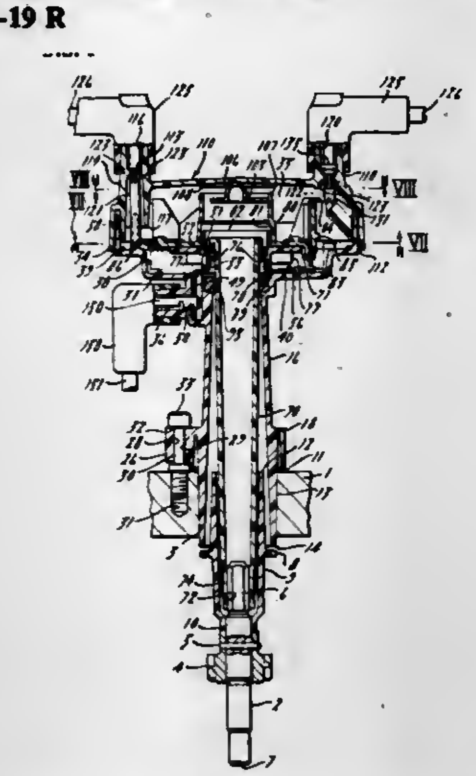

1. A venting system for an internal combustion engine ignition distributor comprising:

a distributor base for mounting on said internal combustion engine, wherein said base contains a floor and a first circular side wall means axially extending from said floor to define an electrical commutation cavity about a central axis;

a rotor shaft mounted within said base in rotational driving connection with said engine for rotation about said central axis;

a commutation rotor mounted on said rotor shaft having a molded dielectric portion with a biasing spring integrally formed therein to provide outwardly directed biasing forces along said central axis;

a circular distributor cap having an upper portion, a second circular side wall means axially extending from the periphery of said upper portion and a third circular side wall means concentric with said second side wall means and internal thereto, separated by a space, wherein said cap and base are mated together against said biasing forces so that said first side wall means is interposed between said second and third side wall means and is separated from said second and third side wall means by an air space defining an open labyrinth vent path between said cavity and the outside of said distributor;

means for latching said mated cap and base against said biasing forces from said biasing spring and for defining both the maximum separation of said side wall means and the maximum opening of said vent path; and

means for purging gases through said open vent path.

4,302,639

TIMER DEVICE, ASSEMBLY, AND METHOD OF OPERATING

Merle J. Lewis, Morrison, and Benito F. Marruffo, Rock Falls, both of Ill., assignors to General Electric Company, Fort Wayne, Ind.

Filed Sep. 19, 1979, Ser. No. 77,015

Int. Cl.³ H01H *7/08*

U.S. Cl. 200—38 R **20 Claims**

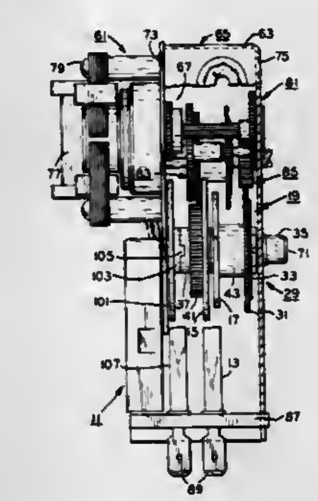

8. A timer device comprising:

switch means adapted for operation between at least a pair of switching modes;

cam means associated with said switch means and generally rotatable for actuating said switch means between the at least switching mode pair thereof in a preselected sequence;

means for driving said cam means to effect the rotation thereof; and

gear means for driven association with said driving means and including means adjustably rotatable to one of a plurality of predetermined operating positions with respect to said cam means for interrupting the actuation by said cam means of said switch means in the preselected sequence and for permitting the actuation of said switch means by said cam means in another preselected sequence different than the first named preselected sequence.

4,302,640

FLOW DETECTOR

Reno L. Vicenzi, Riverside, and Paul R. Smargiassi, Vacaville, both of Calif., assignors to Bourns Medical Systems, Inc., Riverside, Calif.

Filed Nov. 7, 1979, Ser. No. 91,925

Int. Cl.³ H01H *35/34*

U.S. Cl. 200—81 R **8 Claims**

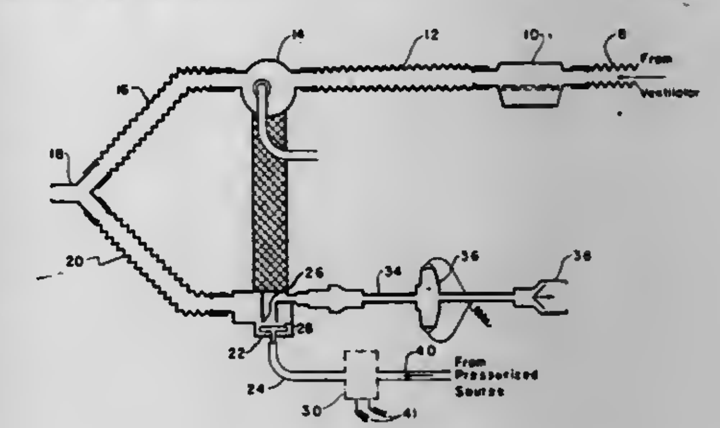

1. In a system for actuating an exhalation valve for use in respiratory therapy comprised of a source of pressurized gas, a gas pressure actuated valve closure member, a valve seat for the valve member, means connecting the pressurized gas sonrce to the valve closure member and a detector coupled to the connecting means for detecting leaks, the improvement comprising the use of an improved flow detector coupled inline between upstream and downstream portions of the connecting means for providing an output signal when there is insufficient pressure to force the gas pressure actuated valve closure member against its valve seat during the inspiration portion of a breathing cycle, said improved flow detector including:

a chamber coupled to the connecting means, said chamber being normally pressurized by gas from the gas source at a pressure substantially determined by the gas source;

first low pressure generating means coupled inline between said upstream and downstream portions of the connecting means and located immediately upstream of said chamber, said low pressure generating means being responsive to the flow of gas therethrough from the pressurized gas source due to a leak or disconnect in said downstream portion of the connecting means for causing the pressure in said chamber to decrease below a predetermined value; and

pressure sensing means coupled to said chamber for providing a predetermined output signal when the pressure in said chamber decreases below the predetermined value.

4,302,641

FLOAT SWITCHES WITH WIDE DIFFERENTIAL

Stephen P. Johnston, Detroit Lakes, Minn., assignor to S. J. Electro Systems, Inc., Detroit Lakes, Minn.

Filed May 12, 1980, Ser. No. 149,194

Int. Cl.³ H01H *35/18*

U.S. Cl. 200—84 R **5 Claims**

1. In combination:

switch means elongated along an axis, for performing a circuit making and breaking function in accordance with tilting of said switch means and axis in opposite directions;

mounting means defining a reference plane and having an aperture, of greater diameter than the transverse dimension of said switch means, through which said switch means extends in transverse supported relation for motion having a linear component orthogonal to said reference plane and angular components in planes orthogonal to said reference plane;

means carried by said switch means on opposite sides of said reference plane and spaced along said axis for engaging

said mounting means to limit said components of motion of said switch means;
said mounting means comprises an outer mounting plate, and an intermediate mounting member, traversed by said switch means,
said intermediate member comprising a hollow body of generally hour-glass external configuration, extending along a further axis in both directions from a site of minimum transverse dimension, and including a central transverse partition defining a first reference plane and having an axial aperture, of greater diameter than the transverse dimension of said switch means, through which said

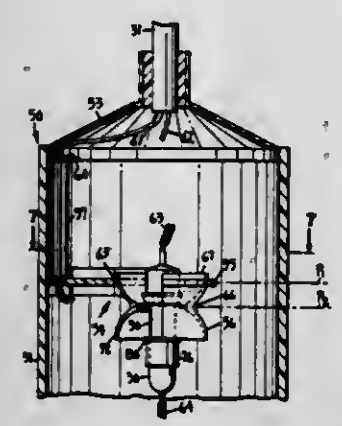

switch means extends in transverse supported relation for motion having said components relative to said reference plane and limited by the axially spaced means; and,
said mounting plate defining a second reference plane and having a second aperture, of greater diameter than said minimum dimension and of less diameter than the maximum transverse dimension of said intermediate member, through which said intermediate member extends in transverse supported relation for movement having a limited linear component orthogonal to said second reference plane and a limited angular component in any plane orthogonal to said second reference plane.

4,302,642
VACUUM SWITCH ASSEMBLY
Robert M. Hrada, Horseheads, and Paul O. Wayland, Montour Falls, both of N.Y., assignors to Westinghouse Electric Corp., Pittsburgh, Pa.
Filed Aug. 24, 1977, Ser. No. 827,398
Int. Cl.³ H01H 33/66
U.S. Cl. 200—144 B **7 Claims**

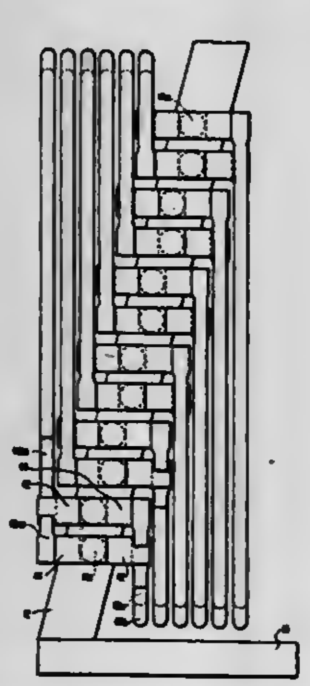

1. In a direct current shunting switch assembly in which a plurality of vacuum switches are disposed electrically in parallel and adapted to be connected across the electrode terminals of an electrochemical cell, the improvement wherein each vacuum switch is connected independently to separate electrical bus conductors, wherein separate electrical bus conductors extend in electrical parallel bus isolated relationship from each other from the respective vacuum switches to the cell electrode terminal connections, which electrically parallel separate bus conductors extend in closely spaced parallel path relationship to provide minimum self-inductance and mutual inductance effects, so that the energy which is dissipated in the last-to-open vacuum switch during interruption will be minimized, and the resistance value of the separate bus conductors is determined so that the potential across the switch assembly and bus conductors at the electrolytic cell electrode terminals is less than the cell battery potential when the switches are closed to permit shunting of the cell current through the plural parallel paths of the switch assembly, and the resistance value of the separate bus conductors is such that when the switches are opened to divert current back through the electrolytic cell, the current through the last-to-open switch is reduced to a value which can be interrupted without damaging the last-to-open switch.

4,302,643
FUSIBLE SWITCH
Russell Cox, Frankfort; Joseph C. Drilling, Lexington, and Ronald H. Reed, Versailles, all of Ky., assignors to Square D Company, Palatine, Ill.
Filed Oct. 29, 1979, Ser. No. 89,002
Int. Cl.³ H01H 33/08, 9/02
U.S. Cl. 200—144 R **23 Claims**

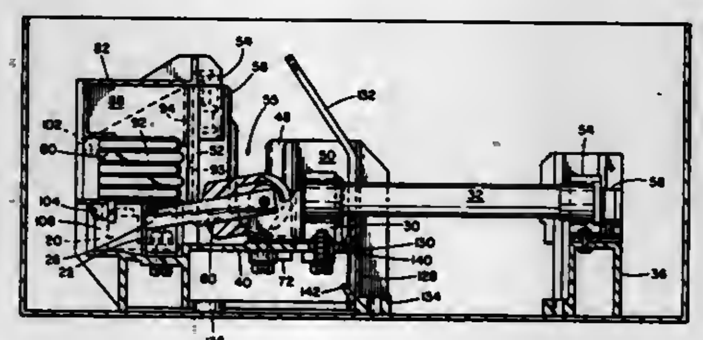

1. A fusible switch assembly for use in a multiphase circuit comprising:
an insulating base formed of an electrically insulating thermoplastic material including a platform wall having integrally formed spaced apart compartment walls to define adjacent compartments with each compartment corresponding to a respective phase,
a line terminal in each compartment with each terminal secured to said platform wall adjacent one end of said platform wall,
a respective switch contact in each compartment connected to each terminal and to said platform wall,
a respective blade terminal in each compartment secured to said platform wall,
a respective knife blade in each compartment pivotally carried by a respective blade terminal for pivoting movement about a common axis to engage and disengage each blade with a respective contact in response to pivoting movement of each blade in a respective direction,
and a fuse clip in each compartment secured to said platform wall adjacent the end of said platform wall opposite said one end of said platform wall and connected to a respective knife blade terminal for extending an electrical connection from a respective line terminal to a respective fuse.

4,302,644
CONTACT BREAKER WITH MAGNETIC ARC BLOWING
Jacques Arvisenet, La Celle St. Cloud, France, assignor to La Telemecanique Electrique, France
Continuation of Ser. No. 782,606, Mar. 29, 1977. This application Dec. 20, 1978, Ser. No. 971,168
Int. Cl.³ H01N 33/18
U.S. Cl. 200—147 R **2 Claims**

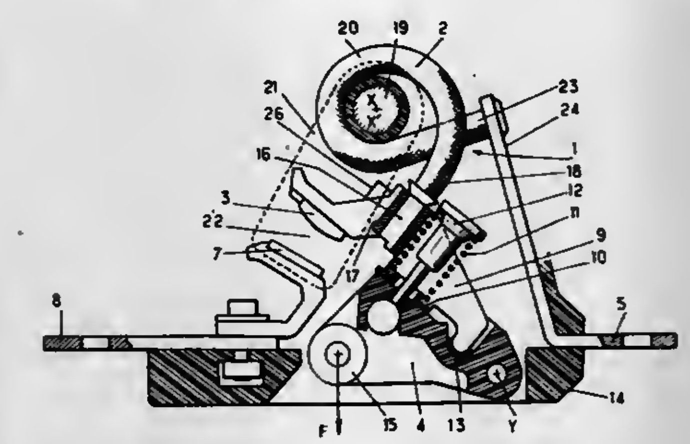

1. A contact breaker with magnetic arc blowing for the interruption of an electrical current, said contact breaker comprising: a fixed contact; an insulating pivoting contact carrier having first and second surface portions; a conducting support lever pivoting on the first surface portion of said pivoting contact carrier; resilient means engaging the conducting lever and the second surface portion of said pivoting contact carrier for resiliently mounting the conducting lever to the contact carrier; a movable contact supported by said pivoting conducting lever; first and second terminals; said fixed contact being connected to said first terminal; magnetic blowing means comprising a flexible coil means consisting of a single conducting braid; a magnetic core within said flexible coil; pole pieces fast with said magnetic core and arranged for guiding, up to the breaking zone, the magnetic field generated by said flexible coils; said flexible coil having a first end electrically connected to the conducting lever in close proximity to the movable contact and a second end mechanically and electrically connected to said second terminal.

4,302,645
GAS-BLAST SWITCH
Richard Thaler, Unterentfelden, Switzerland, assignor to Sprecher & Schuh AG, Aarau, Switzerland
Filed Nov. 20, 1978, Ser. No. 962,218
Claims priority, application Switzerland, Dec. 12, 1977, 15198/77
Int. Cl.³ H01H 33/70
U.S. Cl. 200—148 A **7 Claims**

1. A gas-blast switch comprising:
a gas tight housing incorporating a hollow insulator;
said housing defining a blast chamber therein;
a set of fixed contacts and a set of movable contacts arranged in said housing and surrounded by said blast chamber;
a pump device for extinguishing gas;
a blast nozzle arranged in said housing and operatively associated with said set of movable contacts;
said pump device comprising a pump cylinder enclosing a pump chamber;
said pump cylinder being movable in conjunction with the set of movable contacts;
said pump device further comprising a stationary pump piston upon which there is displaceably mounted said pump cylinder;
a non-return valve cooperating with the pump chamber and opening in the direction of the pump chamber;
pressurized extinguishing gas being sucked-up into the pump chamber by means of said non-return valve during the course of a cut-on stroke of the gas-blast switch;
a supply compartment distinct from said blast chamber and having two axially spaced opposite ends;
said non-return valve being mounted at one end of said supply compartment for connecting the latter with said pump chamber; and

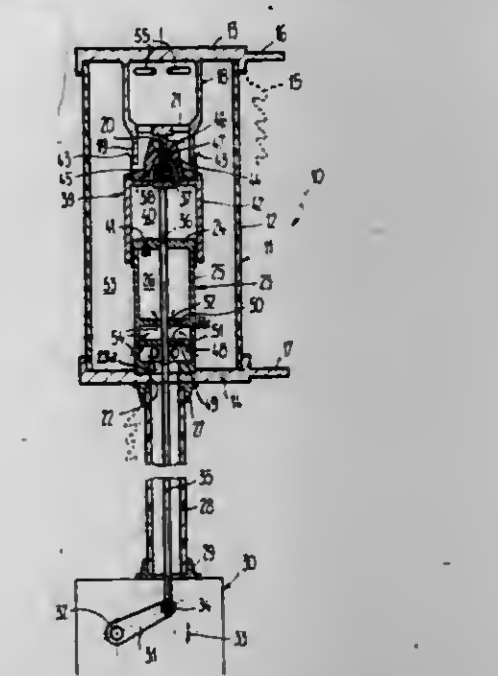

means disposed at the other end of said supply compartment defining at least one labyrinth-like extending flow-path communicating said supply compartment with said blast chamber.

4,302,646
ELECTRIC SWITCH AND OPERATING MECHANISM THEREFOR
Anthony Osborne, Duluth, and Kenneth E. Hanke, Atlanta, both of Ga., assignors to Kearney-National Inc., Atlanta, Ga.
Filed Jan. 14, 1980, Ser. No. 111,913
Int. Cl.³ H01H 3/30, 9/22, 31/06
U.S. Cl. 200—153 SC **18 Claims**

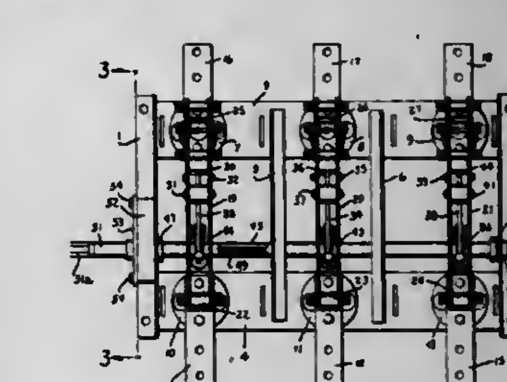

1. An electric switch comprising a pair of relatively movable contacts, an operating linkage interconnected with a movable one of said contacts for imparting operating movement thereto, a hollow rotatable member directly interconnected with said operating linkage and operable to impart operating movement thereto, latch means including a latching part directly secured to said rotatable member and normally effective to secure said rotatable member against rotation, a torsion bar disposed within said hollow rotatable member and interconnected with said rotatable member at one end thereof and effective to impart rotation thereto upon release of said latch means, rotatable motive means operably related with said torsion bar at the other end thereof for twisting and energizing said torsion bar, and latch releasing means operable in coordination with movement of said rotatable motive means for releasing said latch means after a predetermined degree of twisting and energization of said torsion bar.

4,302,647
MEMBRANE TOUCH SWITCHES
James J. Kandler, Milwaukee; Peter H. Basler, Sussex, and Gregory D. Schwehr, Milwaukee, all of Wis., assignors to General Electric Company, Schenectady, N.Y.
Filed Apr. 4, 1980, Ser. No. 137,213
Int. Cl.³ H01H *9/16, 13/00*
U.S. Cl. 200—159 B **7 Claims**

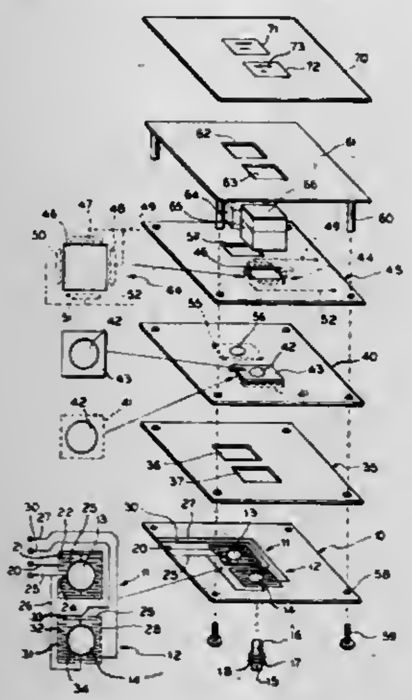

1. A touch switch device comprising:
a planar substrate member,
a spacer sheet superimposed on said substrate member and having an aperture defining a recess which has a depth substantially equal to the thickness of the sheet,
a deflectable membrane having a nominally top surface and a nominally bottom surface superimposed over said sheet and extending over said recess, said membrane having first thin short circuiting switch contact means on its top surface aligned with said recess,
a rigid insulating member having its nominally bottom surface superimposed on said top surface of the membrane and having thin spaced apart switch contact elements on its bottom surface aligned with and normally in contact with said contact on the top surface of the membrane, said rigid insulating member having an aperture aligned with said recess, and
plunger means for extending into said aperture in the insulating member and being movable to deflect said membrane in the vicinity of said recess to cause said contact on the membrane to separate from the contact elements on said insulating member.

4,302,648
KEY-BOARD SWITCH UNIT
Ryoichi Sado, Saitama; Takekuni Okamoto, and Shigeru Matsumoto, both of Tokyo, all of Japan, assignors to Shin-Etsu Polymer Co., Ltd., Tokyo, Japan
Continuation-in-part of Ser. No. 5,513, Jan. 22, 1979, abandoned. This application Jul. 9, 1980, Ser. No. 167,334.
Int. Cl.³ H01H *3/12, 9/26*
U.S. Cl. 200—159 B **4 Claims**

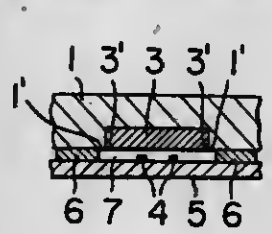

1. A key-board switch unit which comprises
(a) a base plate,
(b) at least one pair of electrodes fixedly provided on one surface of said base plate,
(c) a covering pad made of an electrically insulating rubbery material having a hardness of 30 to 70 in the JIS scale placed to cover the base plate leaving at least one void space therebetween at the portion facing the pair of the electrodes, and
(d) at least one contact member made of an electrically conductive rubbery material having a hardness of 40 to 80 in the JIS scale and embedded in and adhesively bonded to the covering pad at the portion facing the void space in such a manner that, when the covering pad is depressed toward the base plate, the contact member comes into contact with the electrodes to close an electric circuit therebetween, the surface of the contact member being substantially coplanar with the surface of the covering pad at least at the periphery thereof and the surface of the contact member being confined within the surface of the covering pad in the portion of the void space.

4,302,649
SELF-RETAINING ELECTRICAL TERMINAL
Thomas V. Ottersbach, St. Louis County, Mo., assignor to Emerson Electric Co., St. Louis, Mo.
Filed Oct. 9, 1979, Ser. No. 82,768
Int. Cl.³ H01H *1/00*
U.S. Cl. 200—284 **5 Claims**

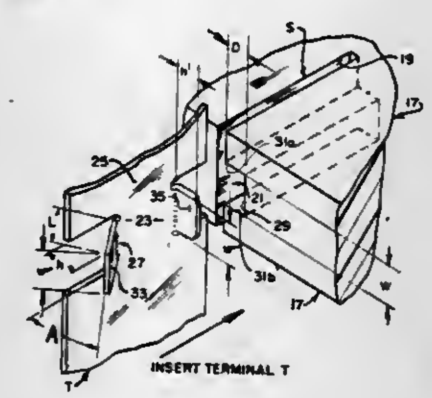

1. In a switch assembly comprising a housing molded of a suitable, electrically insulative, synthetic resin material and having a plurality of electrical terminals securable in place within said switch housing for corresponding electrical circuits, each of said terminals being of suitable electrically conductive sheet metal or the like and having a body portion and a connection portion, said connection portion being adapted to be electrically connected to said electrical circuits, wherein the improvement of this invention comprises: a portion of said housing being adapted to receive said terminal body portion for securement in said housing, said connection portion extending therefrom for connection to said electrical circuits, a plurality of slots, one for each terminal, formed in said housing portion, each of said slots having a relatively narrow portion for reception of said body portion of said terminal with said connection portion extending outwardly therefrom and an enlarged portion in communication with said narrow portion, the body portion of each of said terminals being generally planar and being receivable within said narrow slot portion and a retaining portion receivable within said enlarged slot portion, said housing portion having a base surface for each slot generally parallel to said narrow slot portion and constituting the base wall of said enlarged slot portion and a pair spaced side walls between said narrow slot portion and base wall of each slot so as to form side walls of said wide slot portion, said retaining portion of said body portion having a retaining tab bent out of the plane of said body portion, and a second tab bent out of the plane of said body portion, said second tab being spaced from said retaining tab, said terminal being insertable in sidewise direction into said slot with said planar body portion of said terminal being received in said narrow slot portion and with said retaining tab and said second tab being received within said wide slot portion, said retaining tab and said second tab each having a width somewhat less than the spacing between said side walls of said wide slot portion thereby to substantially prevent movement of said terminal relative to said slot in the plane of said narrow slot portion, said retaining tab having a height from the body portion of said terminal to the outer end of said terminal greater than the depth of said enlarged slot portion from said narrow slot portion to said base wall, said retaining tab, upon insertion in sidewise direction into said wide slot portion, being engageable with said base wall and being resiliently deformed thereby so that the free end thereof forceably engages said base wall for retaining the terminal therewithin upon the attempted withdrawal of the terminal in opposite sidewise direction.

4,302,650
CIRCUIT INTERRUPTER WITH OPTICAL INDICATOR
Kurt A. Grunert; John J. Henwood, and Birch L. DeVault, all of Beaver, Pa., assignors to Westinghouse Electric Corp., Pittsburgh, Pa.
Filed May 30, 1980, Ser. No. 155,808
Int. Cl.³ H01H *9/00*
U.S. Cl. 200—308 **11 Claims**

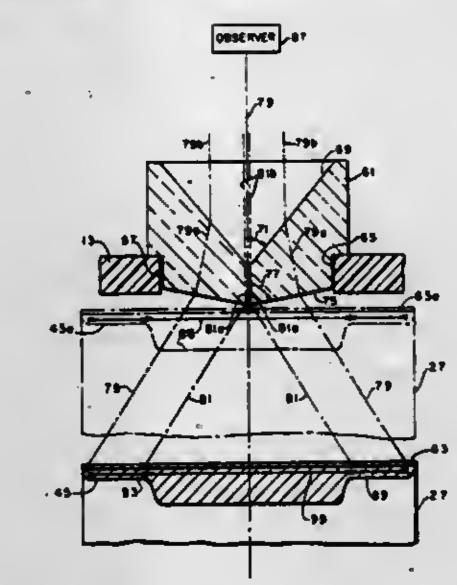

1. A circuit interrupter comprising a housing, a stationary contact structure within the housing, a movable contact carrier structure within the housing and movable between open and closed positions relative to the stationary contact structure, indicator means for observing the position of said carrier structure and including a lens in the housing and directed to said carrier structure, said carrier structure when moved being movable between remote and proximate positions of the lens, indicia on a surface of said carrier structure facing the lens and having two indicia portions, one indicia portion being observable through the lens when said carrier structure is in the remove position, and the other indicia portion being observable when the carrier structure is in proximate positions.

4,302,651
HIGH-VOLTAGE SCR CIRCUIT FOR MICROWAVE OVEN AND THE LIKE
Walter L. Wills, Mesquite, Tex., assignor to Varo Semiconductor, Inc., Garland, Tex.
Continuation of Ser. No. 855,936, Nov. 30, 1977, abandoned. This application Jun. 21, 1979, Ser. No. 50,803
Int. Cl.³ H05B *6/66*
U.S. Cl. 219—10.55 B **4 Claims**

1. A high-voltage circuit for energizing a microwave magnetron having an anode electrode and anode terminal, a heater-cathode electrode and a pair of heater-cathode terminals and operative to generate microwave frequency energy in response to application of a predetermined electrical potential of positive polarity at the anode electrode with respect to the cathode electrode thereof, said high-voltage circuit comprising: a transformer including a primary winding, a low-voltage secondary winding and a high-voltage secondary winding, said low-voltage secondary winding being joined across the pair of heater-cathode terminals of said magnetron for supplying current thereto, said high-voltage secondary winding stepping up the voltage from said primary winding to a predetermined voltage less than the operating potential of said magnetron; an AC source for feeding said primary; capacitor means electrically connected in series with said high-voltage secondary winding and with one of said heater-cathode terminals; high-voltage unidirectional electronic switching circuit means having first and second current conducting terminals and a triggering terminal and responsive to a triggering pulse applied to said triggering terminal for conducting current in a predetermined direction between said first and second current conducting terminals and returning to a non-conductive state in response to the current therethrough reducing to a preselected value, said switching circuit means being connected electrically in shunt of said magnetron; triggering circuit means connected between said AC source and said triggering terminal for producing said triggering pulse at a predetermined point in the phase of each AC cycle of said AC source, whereby the amount of power delivered to said capacitor for energizing

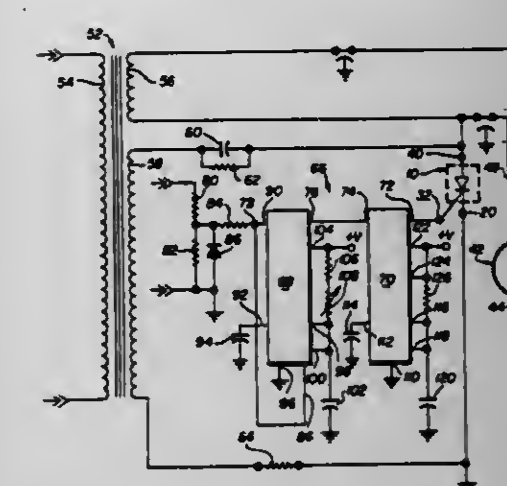

said magnetron is controlled in accordance with said current conducting of said switching circuit means, wherein said triggering circuit means includes means for selectively adjusting said point in the phase of the AC cycle at which said triggering pulses are produced, and wherein said triggering circuit means comprises first and second timing circuit means, each having input terminal means, output terminal means and control terminal means; voltage and current limiting means and rectifier means connected between said AC source and the input terminal means of said first timing circuit means for delivering a voltage and current of predetermined polarity and magnitude thereto; adjustable means disposed at said control terminal means of the first timing circuit means to cause said first timing circuit means to produce an output pulse at its output terminal means during a selected portion of the phase of said AC source, said input terminal means of the second timing circuit means being connected to receive said output pulse and said control terminal means being connected for operating said second timing circuit means as a monostable circuit for producing an output pulse comprising said triggering pulse of predetermined duration on said output terminal means thereof in response to said output pulse of said first timing circuit means, said triggering terminal being connected with said second output terminal means to receive said output pulse.

4,302,652

METHOD OF WELDING THE ENDS OF SUBMERGED PIPES BY SLEEVE ABUTMENT

Philippe C. Nobileau, Neuilly sur Seine; Rene M. Dermy, Courcouronnes, and Guy J. Fleury, Paris, all of France, assignors to Compagnie Francaise des Petroles; Etudes Petrolieres Marines, both of Paris; Ateliers et Chantiers de Bretagne - A.C.B., Nantes; Compagnie Maritime d'Expertises, Marseilles; Compagnie Generale pour les Developpements Operationnels des Richesses Sous-Marines (Doris), Paris and Societe Nationale Elf Aquitaine (Production), Courbevoie, all of, France

Division of Ser. No. 706,324, Jul. 19, 1976, Pat. No. 4,171,175. This application Jun. 6, 1979, Ser. No. 46,128
Claims priority, application France, Jul. 28, 1975, 75 23429
Int. Cl.³ B23K *9/16*
U.S. Cl. 219—72 **17 Claims**

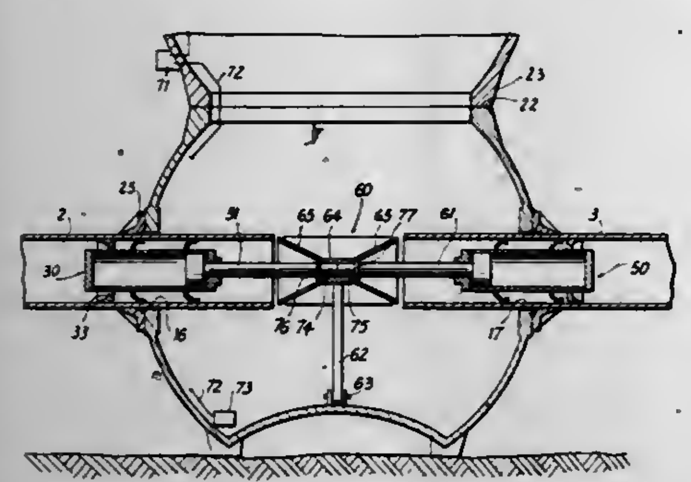

1. A method of joining together the ends of two submerged pipes by welding in a gaseous atmosphere, comprising:
isolating said ends of said pipes to be joined by means of obturators placed in each of said pipe ends, said obturators isolating the interiors of the pipes from the exteriors of the pipes and including an externally controllable piston rod/-cylinder assembly;
introducing said pipe ends into a receptacle;
closing said receptacle by means of an intervention unit;
filing said closed receptacle with gas;
selectively bearing the ends of said piston rods of each obturator on one another; and
welding the thus isolated ends of said pipes to a sleeve of the same diameter as said pipes.

4,302,653

METHOD AND APPARATUS FOR MONITORING AND CONTROLLING A RESISTANCE WELDING OPERATION

Erwin E. Denning, Clare, and William L. Beltz, Harrison, both of Mich., assignors to Weltronic Company, Southfield, Mich.

Filed Apr. 2, 1980, Ser. No. 136,813
Int. Cl.³ B23K *11/24*
U.S. Cl. 219—110 **22 Claims**

1. In a resistance welding controller having means for monitoring the resistance across a pair of weld electrodes and means for controlling the application of welding current to the electrodes, the method of controlling the formation of a weld including the steps of:
establishing a target weld resistance curve characterized by a predetermined minimum resistance value (target Rmin) and a predetermined rate of increase in resistance value (target dR/dt) during the initial heat-up phase of the weld, a desired decline in resistance value during the nugget growth phase of the weld (desired ΔR value), and a target weld time;
monitoring the resistance of the weld and detecting the minimum resistance value (Rmin) of the weld and the subsequent rate of increase in resistance value (dR/dt) during the heat-up phase of the weld and comparing the observed values for Rmin and dR/dt with the target values for Rmin and dR/dt;
dynamically correcting during the heat-up phase of the weld the weld current applied to said electrodes in accordance with said comparison; and
terminating the weld when the desired ΔR value is satisfied.

16. A resistance welding controller for controlling the application of welding current to a pair of electrodes including voltage sensing means for sensing the voltage across the electrodes, current sensing means for sensing the weld current, and means responsive to said voltage sensing and current sensing means for producing an output signal proportional to the resistance across the electrodes; the improvement comprising:
control circuit means responsive to said output signal for controlling the application of welding current to the electrodes so as to achieve a desired decline in resistance value during the nugget growth phase of the weld (desired ΔR value) within a substantially uniform period of time (target weld time), including means for establishing a target resistance curve characterized by a minimum resistance value (target Rmin) and a rate of increase in resistance during the heat-up phase of the weld (target dR/dt), means for

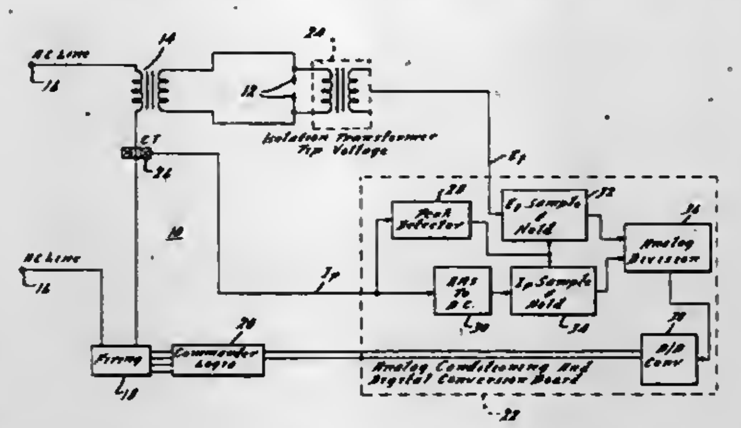

determining the minimum resistance value (Rmin) and rate of increase in resistance value (dR/dt) during the heat-up phase of subsequent welds and comparing the observed values for Rmin and dR/dt with said target values for Rmin and dR/dt, means for dynamically correcting the weld current setting during the heat-up phase of a weld in accordance with said comparisions, and means for terminating the weld when the desired ΔR value is satisfied.

21. In a resistance welding controller having means for monitoring the resistance across a pair of weld electrodes and means for controlling the application of welding current to the electrodes, the method of controlling the formation of a weld including the steps of:
establishing a desired decline in weld resistance during the nugget growth phase of the weld (desired ΔR value), and a target weld time;
initiating the weld at a predetermined weld current setting;
monitoring the resistance of the weld and terminating the weld when the desired ΔR value is satisfied; and
comparing upon termination of the weld the actual weld time observed with said target weld time and adjusting accordingly said predetermined weld current setting in preparation for the start of the next weld.

4,302,654

MICROPERFORATION OF CIGARETTE TIPPING PAPER BY USE OF LASER BEAM

William T. Bennett, Cary, and Bennie L. Parks, Durham, both of N.C.

Filed Jun. 11, 1979, Ser. No. 47,294
Int. Cl.³ B23K *27/00*
U.S. Cl. 219—121 LL **5 Claims**

1. In the method of perforating sheet material by sequentially exposing separate discrete areas thereof to a continuously

operated fixed laser beam projected through the interior of a movable cylindrical mask having apertures in its cylindrical wall, the improvement comprising providing relative movement between the mask and the laser beam by rotating the mask to bring successive apertures in alignment with said beam as said wall moves in a circular path and also providing relative

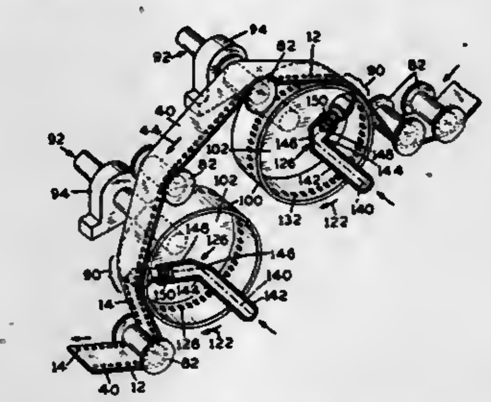

movement between the mask and the sheet material to be perforated by bringing said sheet material into contact with the exterior of the cylindrical wall of said mask along a portion of its circular path and moving said sheet along a path in a direction opposite to the direction of movement of said cylindrical wall.

4,302,655

METHOD AND DEVICE FOR ADAPTIVE CONTROL OF THE WELD PARAMETERS IN AUTOMATIC ARC WELDING PROCESSES

Lars G. Edling, Mölndal, Sweden, assignor to Institutet for Verkstadsteknisk Forskning IVF, Gothenburg, Sweden

Filed Jun. 20, 1979, Ser. No. 50,424
Claims priority, application Sweden, Jun. 22, 1978, 7807161
Int. Cl.³ B23K *9/10*
U.S. Cl. 219—130.32 **11 Claims**

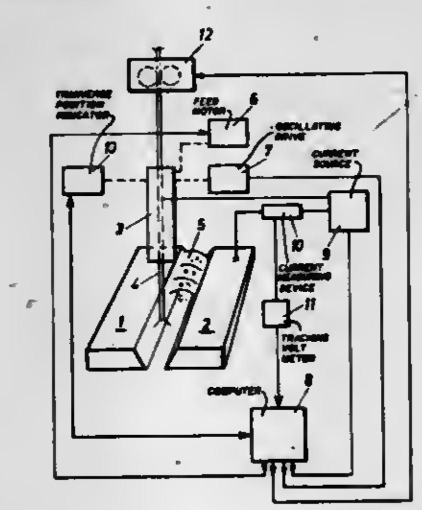

1. An improved method in automatic arc welding of regulating the weld parameters of a weld joint formed between two workpieces to control the amount of melt, said method comprising
oscillating said arc from a longitudinally extending centerline in the transverse direction of the groove between said work pieces,
deriving a characteristic value from electrical quantities of said arc at at least two separate locations in the transverse direction spaced at different transverse locations relative to the centerline to determine the height of melt achieved,
thereafter combining mathematically said values obtained at these locations and comparing the result thus obtained with a rated value indicative of the desired height of melt, the departure of said result from said rated value being used to affect means arranged to set the weld parameters so as to ensure that said departure is maintained at a minimum value and the desired height of melt is maintained, the improvement comprising
measuring the welding current at two separate transverse locations spaced different distances from the centerline during the deposition of a root run of the weld,
combining mathematically the value thus measured on the first one of these locations with the value measured on said second one of said locations,
comparing the result thus obtained with a calculated rated value, said value corresponding to the height of the melt of the root bead of the weld, and
using a signal corresponding to the departure of said calculated result from said calculated rated value to control means arranged to set said weld parameters to maintain the desired melt height.

4,302,656

CONTROLLING THE OPERATIONS OF AN ELECTRIC ARC WELDER

Leonhard Poth, Pullach; Peter Hildebrandt, Kranzberg; Rudolf Pawlik, Wolfratshausen, and Horst Klett, Munich, all of Fed. Rep. of Germany, assignors to Linde Aktiengesellschaft, Wiesbaden, Fed. Rep. of Germany

Continuation of Ser. No. 871,483, Jan. 23, 1978, abandoned. This application Nov. 21, 1979, Ser. No. 96,493
Claims priority, application Fed. Rep. of Germany, Jan. 26, 1977, 2703113
Int. Cl.³ B23K *9/10*
U.S. Cl. 219—137 PS **3 Claims**

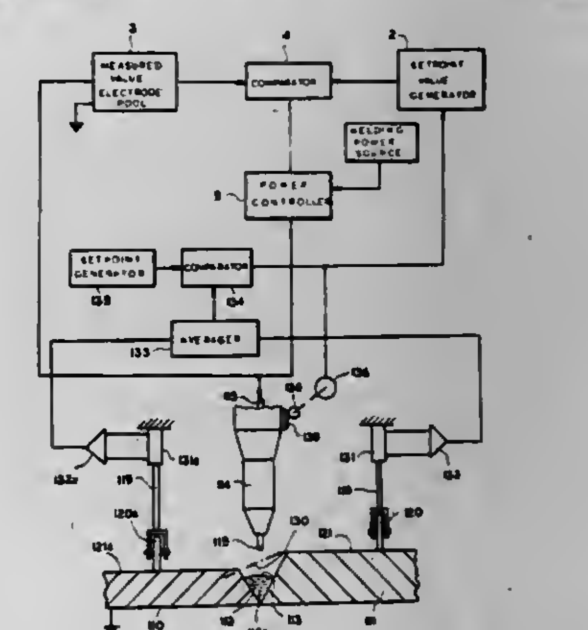

1. In a process for controlling the power of an arc-welding burner having a nonconsumable electrode in dependence upon changes in the level of the upper surface of a pool of weldment deposited in a crevice between a pair of workpieces having upper workpiece surfaces and wherein a measured value of the relative position of the upper pool surface and a nonconsumable arc-generating electrode end of the burner is derived in the form of the arc voltage, the improvement which comprises the steps of:
maintaining the distance between said electrode end and a point representing the mean level of the workpiece surfaces adjoining the pool constant, said distance being maintained constant by electrically detecting the positions of said workpiece surfaces and electrically controlling the position of said electrode end in response to the electrically detected position of said workpiece surfaces;
continuously comparing said measured value with a setpoint valve representing an ideal spacing of the electrode end from the upper surface of the pool and producing an output representing the comparison; and
controlling a welding parameter in response to said output and hence to variations in said arc voltage to increase welding power with decreasing arc voltage and decrease welding power with increasing arc voltage.

4,302,657
METHOD FOR ARC-WELDING THE BLADES TO THE DISC OR COUNTERDISC OF ROTARY MACHINE ROTORS
Federico Turelli, and Maurizio Matteini, both of Florence, Italy, assignors to Nuovo Pignone, S.p.A., Florence, Italy
Continuation of Ser. No. 922,306, Jul. 6, 1978, abandoned. This application Jan. 12, 1980, Ser. No. 158,866
Claims priority, application Italy, Jan. 12, 1978, 19201 A/78
Int. Cl.³ B23K 9/225
U.S. Cl. 219—137 R 1 Claim

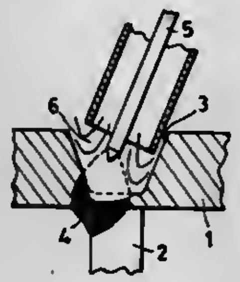

1. A method of arc-welding a blade to the disc or counterdisc of a rotor, comprising:
providing on the disc or counterdisc, on the side opposite that to which the blade is to be welded, a groove of length substantially equal to the length of the blade, said groove being located in a position opposite the position at which the blade is to be welded, and having a bottom wall, the depth of which is less than the thickness of said disc or counterdisc;
positioning the blade in abutting relationship with said disc or counterdisc on the side and at a position opposite said groove;
basting said blade to the bottom wall of said groove of said disc or counterdisc by performing inner welding from the outside without going through said bottom wall by subjecting said groove in generally longitudinal passes to the heat of a tungsten electrode under an inert gas blanket using the TIG arc-welding method without added weld material to form corner basting seams substantially from the material of said bottom wall, to thereby anchor said blade thereto; and
filling the groove by longitudinal passes of the tungsten electrode using the TIG arc-welding method with added weld material;
the current, voltage, welding speed, and positioning of the electrode being kept constant along the length of the groove during both the basting and filling passes.

4,302,658
WELDING SILICON STEEL
Jack M. Belgay, Freeport, Pa., assignor to Allegheny Ludlum Steel Corporation, Pittsburgh, Pa.
Continuation-in-part of Ser. No. 71,519, Aug. 31, 1979, abandoned, which is a continuation of Ser. No. 886,303, Mar. 31, 1978, abandoned. This application Sep. 29, 1980, Ser. No. 191,972
Int. Cl.³ B23K 9/23; H01F 1/04
U.S. Cl. 219—137 R 1 Claim

1. In a process for welding two lengths of steel having from 2.5 to 4.0% silicon and less than 0.008% boron, comprising the steps of:
clamping said lengths in a fixture to restrain movement thereof,
welding said clamped lengths, and
heat treating the weld heat affected area of said lengths at a temperature in excess of 1500° F., wherein the improvement comprises:
retaining said clamped lengths within the fixture from the initiation of the welding step through the completion of the heat treating step, and
after heat treating, cold rolling the welded length.

4,302,659
CERAMIC HEATER-ELEMENT TO BE USED FOR CIGARETTE-LIGHTERS
Tamotsu Horiba, Gifu, and Shigeyuki Hikita, Nagoya, both of Japan, assignors to Kabushiki Kaisha Tokai Rika Denki Seisakusho, Aichi, Japan
Filed Feb. 15, 1980, Ser. No. 122,075
Claims priority, application Japan, Feb. 15, 1979, 54-16836
Int. Cl.³ F23Q 7/22
U.S. Cl. 219—270 2 Claims

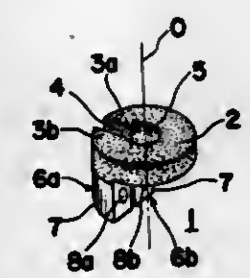

1. An integral ceramic heater-element for use in a plug type cigarette lighter situated in an inner car body, said integral ceramic heater element comprising:
an annular shaped heater portion having a radially extending gap thereby providing two opposing cross sectional end portions defined by the radial edges of said gap;
two electrode portions, each of said two electrode portions having an electrode end portion, said two electrode end portions being joined to and integral with one side of said annular shaped heater portion such that each one of said electrode end portions is respectively situated adjacent to one of said two opposing cross-sectional end portions each of said two electrode portions projects substantially longitudinally outward from said annular shaped heater portion and the longitudinal edges of said two electrode end portions are substantially longitudinally parallel to the central longitudinal axis of said annular shaped heater portion; and
the diametrical cross-sectional area of said annular shaped heater portion being relatively smaller than the diametrical cross-sectional area of either one of said two electrode portions; and
the planes coextensive with the peripheral edges of the diametrical cross section of said annular shaped heater portion intersecting at substantially right angles.

4,302,660
DOOR OPENING MECHANISM FOR PARTIALLY OPENING A TOASTER OVEN DOOR
Charles E. Swanson, Chicago, and Roy W. Hector, Woodridge, both of Ill., assignors to Sunbeam Corporation, Chicago, Ill.
Division of Ser. No. 750,367, Dec. 13, 1976, Pat. No. 4,189,632. This application Aug. 27, 1979, Ser. No. 70,229
Int. Cl.³ A47J 37/04, 37/08
U.S. Cl. 219—391 5 Claims

1. A door opening assembly for partially opening a door comprising a rack bracket slidably secured to a housing, switch means mounted in said housing movable to a first energized position and to a second de-energized position,
a first lever pivotally secured to said housing and held in a first position by a thermal timer means and released by said timer means to move to a second position upon expiration of a predetermined period,
a resiliently biased slide slidably mounted in said housing, said slide engaged by said first lever in said first position of said lever and released when said first lever moves to said second position,
a resiliently biased lever assembly secured to said housing coupling said slide to said rack bracket and to said switch means,

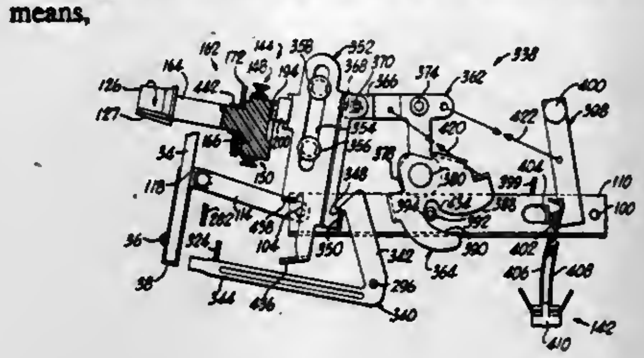

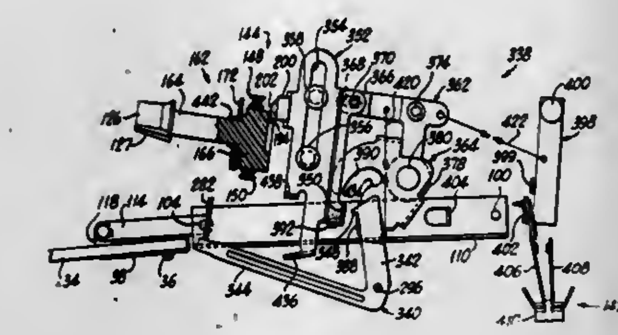

said slide and said lever assembly moving said rack bracket to partially open said door and actuating said switch means to said second position upon release of said slide by said first lever.

4,302,661
SELF-CLEANING OVEN CONTROL SYSTEM
Edward H. Perry, Jr., 2601 Oakland Dr., Cleveland, Tenn. 37311
Filed Mar. 31, 1980, Ser. No. 135,768
Int. Cl.³ H05B 1/02
U.S. Cl. 219—398 3 Claims

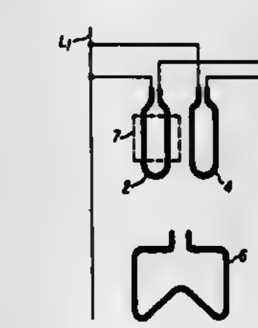

1. In an oven having baking and broiling heating means, the improvement comprising:
said broiling heating means comprising a pair of symmetrically arranged electrical heating elements;
said baking heating means comprising a single electrical heating element; and
switch means for selectively connecting said broiling heating elements in series and said baking heating element in parallel therewith for baking; for connecting said broiling heating elements in parallel for broiling; and for connecting one of said broiler heating elements in series with said baking heating element to form a series connection and the other of said broiling heating elements in parallel with said series connection for self-cleaning operation of said oven.

4,302,662
CONTROL INSTRUMENT FOR ELECTRIC HOT PLATES
Robert Kicherer, Knittlingen, and Wilfried Schilling, Kraichtal, both of Fed. Rep. of Germany, assignors to E.G.O. Regeltechnik GmbH, Fed. Rep. of Germany
Continuation-in-part of Ser. No. 922,027, Jul. 5, 1978, Pat. No. 4,214,151. This application Aug. 16, 1979, Ser. No. 67,087
Claims priority, application Fed. Rep. of Germany, Aug. 23, 1978, 2836882
The portion of the term of this patent subsequent to Jul. 22, 1997, has been disclaimed.
Int. Cl.³ H05B 1/02
U.S. Cl. 219—491 5 Claims

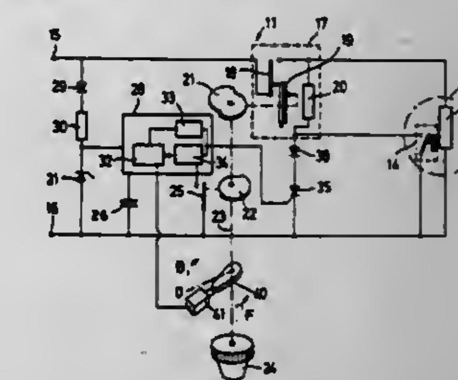

1. A control instrument for electric hot plates with an adjustable quantizing power control device which has manually, substantially continuous adjusting means and supplies power to the electric hot plates in individual power pulses, comprising; an expansion member with an electrical heating means, and a time switch, which for a period of time, increases the output of the power control device in an initial cooking phase, the time switch including an electronic counter as a timing member and at least one divider which, by means of an electronic switch element, reduces the power supplied to the heating means in a predetermined division ratio, wherein the time switch, which can be switched on in a lower power, continuous cooking range, can be automatically switched on by the manual adjusting means being adjusted to a power setting in the continuous cooking range.

4,302,663
CONTROL SYSTEM FOR A HEATER
Amos E. Chesnut, and Carl R. Pittman, both of Columbus, Ind., assignors to Arvin Industries, Inc., Columbus, Ind.
Filed Feb. 4, 1980, Ser. No. 118,605
Int. Cl.³ H05B 1/02
U.S. Cl. 219—497 34 Claims

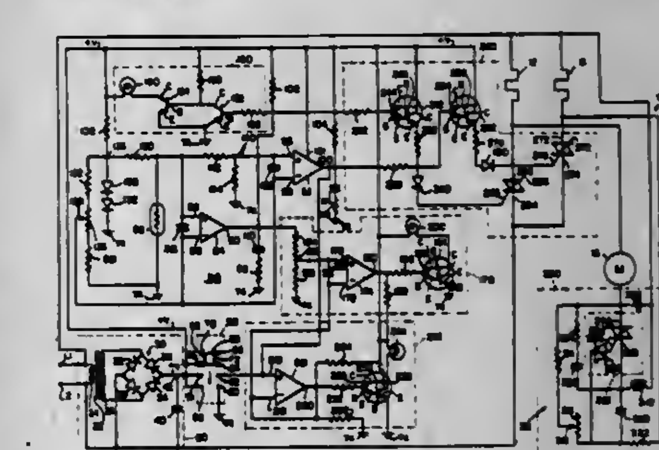

1. An air temperature conditioning device, comprising first and second conditioning elements, means for circulating air past the conditioning elements to condition it and supply conditioned air to an environment, and circuit means for controlling the conditioning elements, the circuit means including a temperature sensitive device for sensing ambient temperatures, means for selecting a desired ambient temperature to be gener-

ally maintained by the conditioning device, first means for comparing the sensed ambient temperature to the selected desired temperature and for causing the first conditioning element to operate when a first difference is detected between a sensed ambient temperature and the selected desired temperature, and second means for comparing sensed ambient temperature to the selected desired temperature for causing the second conditioning element to operate when a second difference is detected between sensed ambient temperature and the selected desired temperature.

4,302,664
CONTACT LENS ASEPTOR
Francis E. Ryder, and Michael D. Thomas, both of Arab, Ala., assignors to Ryder International Corporation, Arab, Ala.
Filed Jan. 16, 1980, Ser. No. 112,783
Int. Cl.³ A61L *2/04;* H05B *1/02*
U.S. Cl. 219—504 **5 Claims**

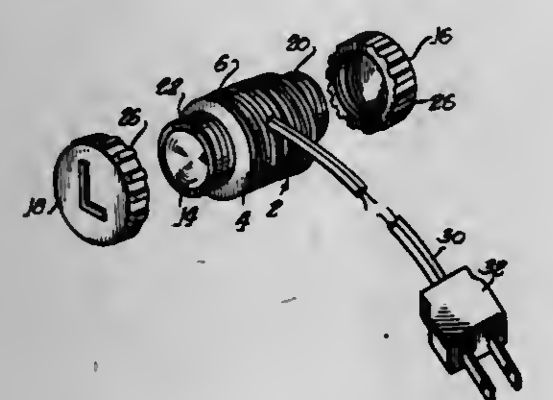

1. A contact lens aseptor, comprising: an elongate molded plastic casing having a pair of wells at opposite ends thereof for receiving a contact lens and a quantity of disinfecting solution, each well opening to an end surface of the casing and removable cover means attachable to said casing at each end thereof to overlie the associated well opening, an electrical heater means integrally molded as a component of said casing and disposed intermediate said wells for supplying heat to each said well, the plastic material forming said casing being continuous from said heater to said wells, whereby said heater means is embedded in said casing, and said heater means being of a type having a resistance that increases as a function of temperature to limit the maximum operating temperature thereof, and power supply means affixed to said heater means and extending from said heater means to the exterior of said casing for connection to a source of power.

4,302,665
CIRCUIT FOR MEASURING THE DURATION OF A PULSE TRAIN, ITS USE AND CIRCUIT FOR ITS USE
Wolfgang Hoenig, Voerstetten, Fed. Rep. of Germany, assignor to ITT Industries, Inc., New York, N.Y.
Filed Sep. 13, 1979, Ser. No. 74,936
Claims priority, application Fed. Rep. of Germany, Sep. 18, 1978, 2840555
Int. Cl.³ G06M *3/14*
U.S. Cl. 235—92 TF **3 Claims**

1. A circuit for measuring the period of a pulse train comprising:
means for generating pulses at regular intervals, a predetermined number of said pulses defining a measuring period,
a counter for deriving a count during said measuring period, said counter having a counting input, a condition input and a reset input,
a memory for storing the count available at the end of said measuring period,
an arrangement for indicating the memory contents,
a coincidence gate for comparing the count of the counter after each measuring period, with the contents of the memory,
a bidirectional forward-backward counter, having a highest value and a zero position and including a counting input to which one counting pulse is applied per measuring period, wherein said bidirectional counter is switched by the coincidence gate to a forward counting in the event of an equality of both the count and the memory contents, and to backward counting in the event of an unequality, and wherein its counting input is blocked upon reaching its highest value or its zero position when simultaneously switched to forward counting or backward counting by

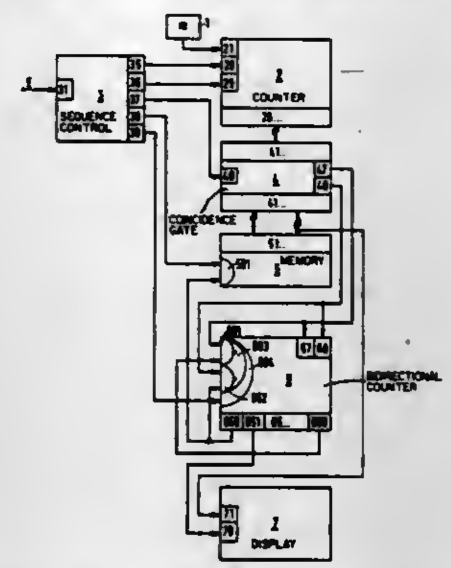

the coincidence gate, and which only in its zero position permits the count to be read into the memory, and a sequence control circuit controlled by said pulse train, said control circuit having an input to which the pulse train is applied and first through fifth outputs, said first output providing a condition signal to said condition input of said counting means, said second output providing a reset signal to said reset input of said counting means, said third output providing a condition signal to said coincidence gate, said fourth output providing a control signal to said memory, and said fifth output providing a pulse signal to an input of said bidirectional counter.

4,302,666
POSITION CONTROL SYSTEM OF THE DISCONTINUOUS FEEDBACK TYPE
Patrick J. Hawkins, Bellevue, Wash., assignor to The Boeing Company, Seattle, Wash.
Filed Nov. 13, 1979, Ser. No. 93,206
Int. Cl.³ F41G *3/22;* G05D *3/20*
U.S. Cl. 235—404 **15 Claims**

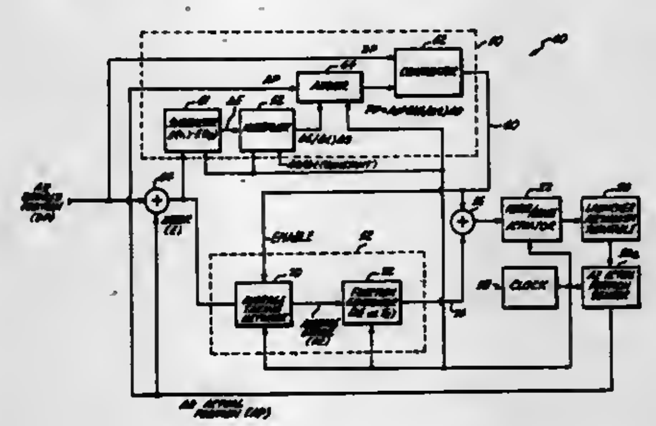

1. A control apparatus for positioning a dynamically controlled mechanism having at least a first axis of controlled movement, comprising in combination:
actuator means operatively associated with said controlled mechanism and having forward and reverse drive modes

for displacing said mechanism with respect to said first axis of movement and having a stop mode;
position sensing means operatively associated with said controlled mechanism for producing an actual position signal (AP) representing the actual position of said mechanism with respect to said first axis of movement:
signal source means for producing a desired position signal (DP) representing a desired position for said controlled mechanism with respect to said first axis of movement;
summing means connected to receive the AP and DP signals, said summing means producing an error signal (E) representing the difference between the AP and DP signals;
first and second signal processors connected between said summing means and said actuator means, said first signal processor comprising the subcombination of:
(a) means for producing a predicted position signal (PP) in response to the AP signal and a constant factor related to a stopping distance of said controlled mechanism when said actuator means is caused to change from one of said drive modes to said stop mode;
(b) comparator means for comparing the PP signal with the DP signal and producing an actuator drive signal at an output thereof that disposes said actuator means in one of said drive modes so long as the difference between the DP and PP signals is greater than a predetermined difference threshold, and that disposes said actuator means in said stop mode when the difference between the DP and PP signals is less than said threshold;
said second signal processor comprising the subcombination of:
(c) signal averaging means for taking a time average of said error signal E, means for activating said averaging means after said comparator means of said first signal processor has produced an actuator drive signal disposing said actuator means in said stop mode, and said averaging means having an output producing a time averaged signal (AE) representing a time average of the error signal E; and,
(d) function generator means having an input connected to the output of said signal averaging means for producing an actuator drive signal in response to the signal AE for disposing said actuator means in one of said drive modes, depending on the sense of the signal AE, for a duration, T_c that varies as a predetermined function of the magnitude of the signal AE for removing a steady state position error corresponding thereto.

12. A method of controlling the position of a dynamically controlled mechanism wherein a mechanism actuator is selectively operated in forward or reverse drive modes or a stopped mode by an actuator drive signal developed in response to signals representing desired position (DP), actual position (AP) and a position error (E) which is the difference between signals DP and AP, comprising the steps of:
initially processing said DP, AP and E signals to effect a coarse positioning of said mechanism, the step of initially processing said signals comprising the substeps of:
producing a predicted position signal (PP) that represents the actual position AP plus an additional factor representing a stopping distance of the mechanism when said actuator is caused to change from one of said drive modes, to said stop mode; and
comparing the predicted position signal PP with the DP signal, and producing actuator drive signal that drives the actuator in one of its drive modes so long as the difference between the signals DP and PP is greater than a predetermined difference threshold, and producing an actuator drive signal that causes the actuator to assume its stop mode when the difference between the DP and PP signals is less than said threshold; and
subsequently processing said signal E to effect an improvement of said coarse positioning, comprising the substeps of:
receiving and taking an average of said signal E over a predetermined time to produce a discrete time average error signal (AE), and generating an actuator drive signal in response to said average error signal AE for causing said actuator to assume one of said drive modes, depending on the sense of the signal AE, for a discrete duration T_c that is a predetermined function of the magnitude of the signal AE for removing an offset error in position that remains after said coarse positioning performed by the initial processing of said signals.

13. The method set forth in claim 12 wherein the subsequent signal processing further comprises the substeps of:
electronically storing a set of values of predetermined ranges of the signal AE and a set of corresponding values for the required time duration T_c needed to remove offset errors associated with said ranges of the signal AE;
retrieving said values of time duration T_c in response to the signal AE produced by said step of averaging the error signal E;
adaptively generating revised values of the ranges of the signal AE and the values of time duration T_c corresponding thereto; and
updating the values of said ranges and time duration that have been previously stored as a result of the above said step of electronically storing.

4,302,667
NEAR MILLIMETER BISTABLE DEVICE
Raymond Y. Chiao, Kensington, Calif.; Harold R. Fetterman, Lexington, Mass., and Howard R. Schlossberg, Annandale, Va., assignors to The United States of America as represented by the Secretary of the Air Force, Washington, D.C.
Filed Oct. 17, 1979, Ser. No. 85,663
Int. Cl.³ G01J *1/32*
U.S. Cl. 250—205 **7 Claims**

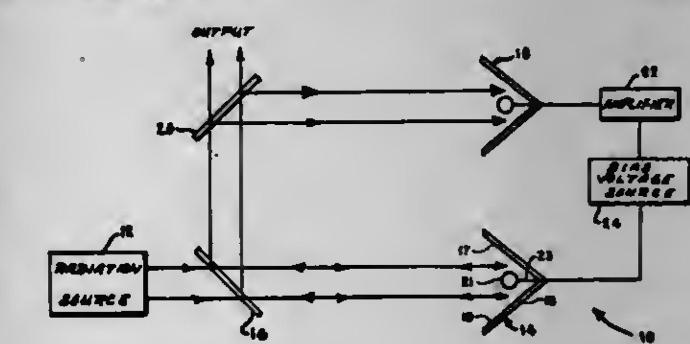

1. A near millimeter wavelength bistable device comprising means for producing a beam of electromagnetic radiation at near millimeter wavelength at a preselected power, means in optical alignment with said radiation producing means for variably reflecting said beam of radiation, first means optically interposed between said radiation producing means and said variable reflecting means for directing said beam of electromagnetic radiation to said variable reflecting means and for reflecting said reflected beam from said variable reflecting means away therefrom, second means optically aligned with said reflected beam from said first directing and reflecting means for directing a portion of said reflected beam out of said bistable device as an output and reflecting the remaining portion away therefrom, means optically aligned with said remaining portion of said beam from said second directing and reflecting means for detecting said remaining portion of said reflected beam of electromagnetic radiation and providing a voltage in accordance with the power of said reflected beam of radiation, and means electrically connected between said detecting means and said variable reflecting means for providing a signal in accordance with said voltage produced by said detecting means to said variable reflecting means for altering the reflectivity of said variable reflecting means whereby said output produced by said bistable device has two stable conditions, one of said stable conditions being at a relatively high output

power and the other of said stable conditions being at a relatively low output power.

4,302,668
VARIABLY BIASED PHOTOELECTRIC CIRCUIT
Walter Schmitt, Traunreut, Fed. Rep. of Germany, assignor to Dr. Johannes Heidenhain GmbH, Traunreut, Fed. Rep. of Germany
Filed Nov. 23, 1979, Ser. No. 96,619
Claims priority, application Fed. Rep. of Germany, Dec. 25, 1978, 2852530
Int. Cl.^{3} H01J *40/14*
U.S. Cl. 250—209 **8 Claims**

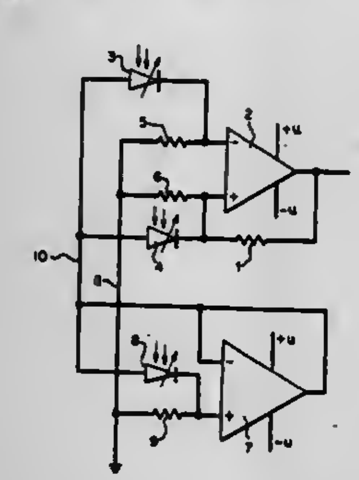

2. A photoelectric circuit comprising:
a first differential amplifier having first and second input terminals and an output terminal;
a second amplifier having an input termiaal and an output terminal;
first, second and third photosensitive circuits, each comprising a respective photosensitive element connected to a respective resistor at a respective node;
means for connecting the nodes of the first and second photosensitive circuits to the first and second input terminals, respectively, of the first amplifier;
means for connecting the node of the third photosensitive circuit to the input terminal of the second amplifier;
means for providing the signal generated at the output terminal of the second amplifier as a bias signal to the photosensitive elements of the first, second and third photosensitive circuits; and means for supplying voltages to the respective resistors.

4,302,669
NEUTRON THERMALIZATION TIME LOGGING
Linus S. Allen, Dallas, and William R. Mills, Jr., Duncanville, both of Tex., assignors to Mobil Oil Corporation, Fairfax, Va.
Filed Jul. 9, 1979, Ser. No. 55,934
Int. Cl.^{3} G01V *5/00*
U.S. Cl. 250—264 **12 Claims**

1. In the logging of a well penetrating a subterranean formation containing hydrogenous fluid therein, the method comprising:
(a) irradiating said formation with a burst of fast neutrons whereby fast neutrons enter said formation and are moderated therein to form a population of slow neutrons comprised predominantly of epithermal neutrons during a thermalization period occurring subsequent to said fast neutron burst and comprised predominantly of thermal neutrons during a thermal equilibrium diffusion period occurring subsequent to said thermalization period,
(b) employing a first neutron detector to measure the count rate of slow neutrons within an energy range having a lower limit which is less than the chemical binding energy of hydrogen in said hydrogenous fluid during a first time window occurring within said thermalization period and during at least another time window occurring within said thermal equilibrium diffusion period, and
(c) employing a second neutron detector having a different energy-dependent sensitivity than said first detector to slow neutrons at energy levels less than the chemical

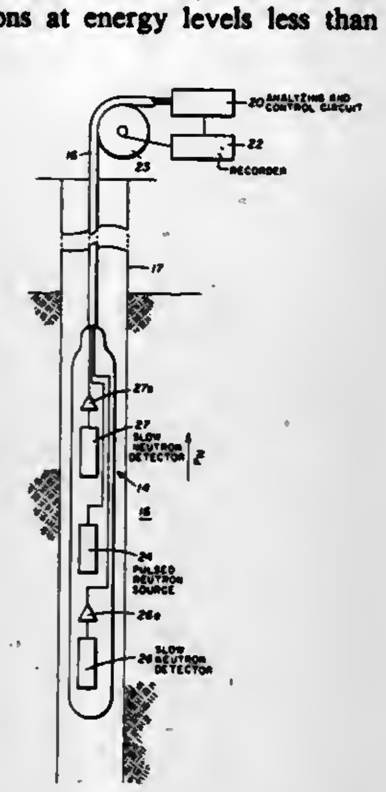

binding energy of hydrogen in said hydrogenous fluid to measure the count rate of slow neutrons during said first time window occurring within said thermalization period and said at least another time window occurring within said thermal equilibrium diffusion period.

4,302,670
ELECTROGENIC SEED TREATER
Andrew Zaderej, South Bend, Ind., assignor to Claude E. Corson, Elkhart, Ind.
Continuation of Ser. No. 919,689, Jun. 27, 1978, abandoned. This application Jul. 17, 1979, Ser. No. 58,271
Int. Cl.^{3} H05E *3/06*
U.S. Cl. 250—324 **4 Claims**

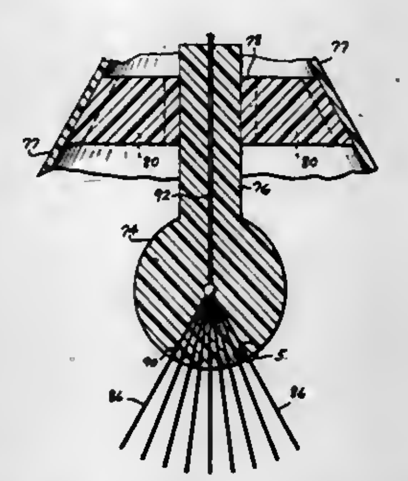

1. A generator for producing particle elements from air comprising a housing having oppositely open ends to admit said air, an electrode located within said housing between said open ends, a collector of charges located at one open end, means for providing said electrode with a high voltage potential directed toward said collector, said electrode including a generally spherical dielectric part and a plurality of spaced electrically conductive needles each anchored at one end in said dielectric part, said needles extending generally radially from said dielectric part over a sector thereof in the direction of said collector, each needle connected to said potential providing means by a current limiter means for suppressing ozone production about said needles in the presence of said air.

4,302,671
RADIATION IMAGE READ-OUT DEVICE
Hisatoyo Kato; Seiji Matsumoto, and Junji Miyahara, all of Minami-ashigara, Japan, assignors to Fuji Photo Film Co., Ltd., Kanagawa, Japan
Filed Sep. 28, 1979, Ser. No. 80,131
Claims priority, application Japan, Oct. 5, 1978, 53-122881
Int. Cl.^{3} G01T *1/11*
U.S. Cl. 250—327.1 **5 Claims**

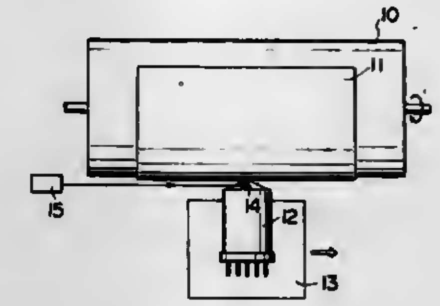

1. A radiation image read-out device for reading out radiation image information carried by the light emitted by a stimulable phosphor upon being stimulated with stimulating rays according to the image information recorded in the stimulable phosphor in advance by exposure to imagewise radiation, said image read-out device comprising a photosensor located close to a stimulable phosphor plate for detecting the light emitted by the stimulable phosphor plate upon stimulation with stimulating rays, and a reflecting optical element disposed between the photosensor and the stimulable phosphor plate for reflecting the stimulating rays advancing between the photosensor and the stimulable phosphor plate toward the stimulable phosphor plate, said reflecting optical element having a size small enough to allow most of the light emitted by the stimulable phosphor to be received by the photosensor.

4,302,672
IMAGE GRADATION PROCESSING METHOD AND APPARATUS FOR RADIATION IMAGE RECORDING SYSTEM
Hisatoyo Kato; Masamitsu Ishida, and Seiji Matsumoto, all of Minami -ashigara, Japan, assignors to Fuji Photo Film Co., Ltd., Kanagawa, Japan
Filed Feb. 22, 1980, Ser. No. 123,578
Claims priority, application Japan, Feb. 28, 1979, 54-23091
Int. Cl.^{3} G03C *5/16;* **G01T** *1/11;* **G06F** *15/42*
U.S. Cl. 250—327.1 **13 Claims**

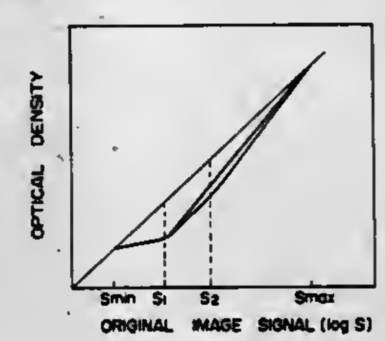

1. A method of gradation processing a chest radiation image in a radiation image recording system in which a stimulable phosphor is scanned with a stimulating ray and the chest radiation image information recorded therein is read out and converted into an electric signal upon stimulation thereof and then a visible image is recorded on a recording medium by use of the electric signal, said method comprising lowering the level of the electric signal corresponding to the density between the densities of the spine and the heart of the chest radiation image to lower the density of the image at the level between the density of the spine and the density of the heart, whereby the contrast of the spine is lowered and the contrast of the heart and the lungs is raised in the image recorded on the recording medium.

4,302,673
TECHNIQUE FOR OPTICAL NON-UNIFORMITY CORRECTION OF AN IMAGING SYSTEM
Vincent T. Bly, Alexandria, Va., assignor to The United States of America as represented by the Secretary of the Army, Washington, D.C.
Filed Jul. 15, 1980, Ser. No. 169,017
Int. Cl.^{3} H01J *31/49;* **G01J** *1/00*
U.S. Cl. 250—332 **15 Claims**

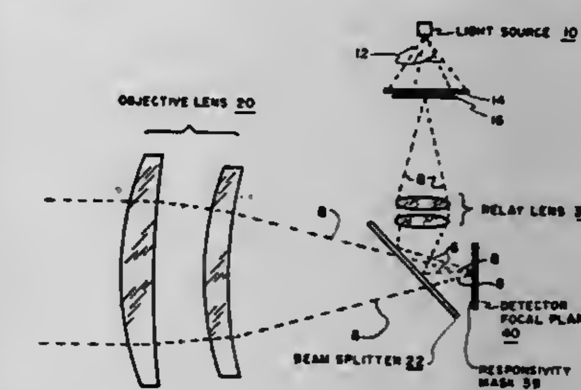

1. In a focal plane array infrared imaging system, means of optical non-uniformity correction of fixed pattern noise, said means comprising:
a multiplicative correction means for selectively limiting the sensitivity of each detector to the least sensitive detector of a plurality of detectors in said focal plane array; and
an additive optical correction means for selectively adding sensitizing illumination to each of said plurality of detectors on a pixel-by-pixel basis to provide uniform output from said focal plane array at a desired operating flux level.

4,302,674
INFRARED RADIATION DETECTING APPARATUS AND METHOD OF MANUFACTURING IT
Hideo Adachi, Kyoto, and Kiichi Minai, Shiga, both of Japan, assignors to Murata Manufacturing Co., Ltd., Japan
Filed Apr. 24, 1979, Ser. No. 32,916
Claims priority, application Japan, May 8, 1978, 53/54792
Int. Cl.^{3} G01J *1/00;* **H04N** *9/27;* **G01J** *1/42*
U.S. Cl. 250—338 **42 Claims**

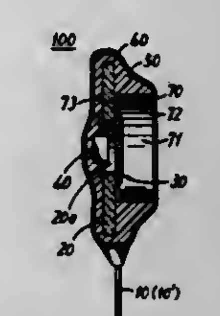

1. An infrared radiation detecting apparatus, comprising:
a substrate made of an insulating material;
a thermal type infrared radiation sensing device having first and second opposing main surfaces, said first main surface constituting a radiation receiving surface for providing, responsive to heat caused by incident infrared radiation impinging upon said radiation receiving surface, an electrical signal representative of the intensity of said incident infrared radiation; said second main surface of said thermal type infrared radiation sensing device being secured to said insulating substrate;
an annular member secured to the combination of said insu-

lating substrate and said thermal type infrared radiation sensing device so as to surround said radiation receiving surface for blocking infrared radiation approaching said radiation receiving surface at more than a predetermined angle from the normal;

external connection lead means secured to said insulating substrate and in electrical contact with said thermal type infrared radiation sensing device;

a first resin layer covering said thermal type infrared radiation sensing device except said radiation receiving surface, and covering said insulating substrate and a portion of said external connection lead means; and

a second resin layer covering said radiation receiving surface, said second resin layer being transparent to infrared radiation having a wave length within a predetermined range.

4,302,675

METHOD OF MULTIPLANAR EMISSION TOMOGRAPHY AND APPARATUS THEREFOR

Robert H. Wake, Solon; Stephen C. Gottschalk, Macedonia, and Kendall A. Smith, South Russel, all of Ohio, assignors to Technicare Corporation, Solon, Ohio

Filed Jan. 21, 1980, Ser. No. 113,871

Int. Cl.³ G01T *1/20;* **G21F** *5/04*

U.S. Cl. 250—363 S **13 Claims**

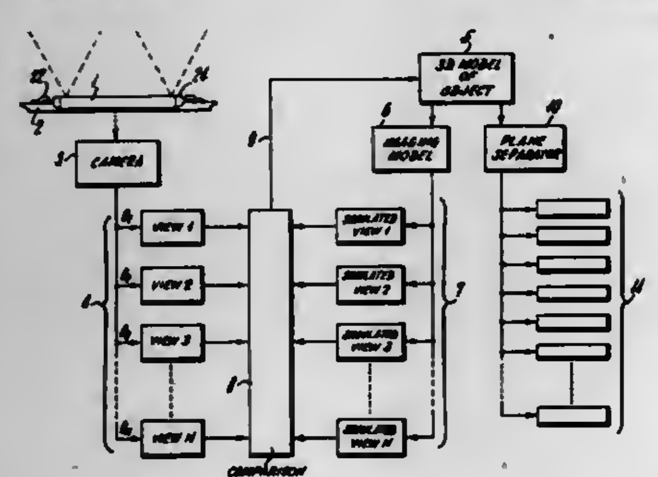

1. An apparatus for producing a multiplanar representation of a radioisotope distribution within a volume of interest comprising:

(a) a planar imaging device disposed adjacent said volume of interest for detecting photons emitting from said volume of interest;

(b) a rotatable collimator interposed between said planar imaging device and said volume of interest having a multiplicity of apertures to permit the passage of photons therethrough, said apertures being nonperpendicular in relation to the face of said planar imaging device;

(c) means for successively recording a plurality of projections of said volume of interest, each projection acquired from the photons detected by said imaging device associated with an angular orientation assumed by the rotatable collimator;

(d) reconstruction means for generating a three-dimensional array from said plurality of projections, said three-dimensional array simulating the radioisotope distribution within the volume of interest; and

(e) means for separating said three-dimensional array into a plurality of discrete planar sections, each such planar section of the volume of interest representing the radioisotope distribution in a planar section of said volume of interest corresponding to a specific normal distance from the collimator, thus corresponding to a specific depth range within said volume of interest, such that the aggregate of said discrete planar sections represents in three dimensions the radioisotope distribution within said volume of interest.

4,302,676

ISOTOPE SEPARATION

Menahem Levin, 75 Herzl St., Ramat Gan, and Isaiah Nebenzahl, 10a Nachshon St., Haifa, both of Israel

Filed Mar. 15, 1973, Ser. No. 341,567

Claims priority, application Israel, Mar. 19, 1972, 39023

Int. Cl.³ A01J *39/34*

U.S. Cl. 250—423 P **8 Claims**

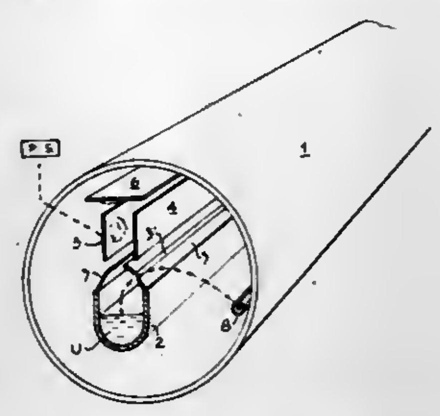

1. A process for the separation of one isotope from a mixture of isotopes in atomic form which comprises selectively exciting the desired isotope to an energy level at a distance dE below the ionization continuum by means of laser irradiation, said level dE being at such a distance beneath the ionization continuum that the excited atoms at this level can be ionized by means of irradiation of an infrared laser; irradiating the excited atoms with an infrared laser so as to ionize them selectively, and separating the ionized atoms by deposition on a desired substrate.

4,302,677

CONTROL ARRANGEMENT FOR FLUID STERILIZING APPARATUS

Nils L. Albertsson, Grevgatan 42, S-114 53 Stockholm; Tor A. Albertsson, Akerbyvägen 88, S-183 35 Täby; Lennart R. Nordell, Orrspelsvägen 12, S-182 75 Stocksund; Björn V. B. Björk, Vinterstigen 20, S-150 24 Rönninge, and Refaat M. El-Sayed, Näsbydalsvägen 14, S-183 31 Täby, all of Sweden

Filed Mar. 26, 1980, Ser. No. 133,971

Claims priority, application Sweden, Mar. 27, 1979, 7902704; Jan. 4, 1980, 8000062

Int. Cl.³ G01N *21/01*

U.S. Cl. 250—429 **5 Claims**

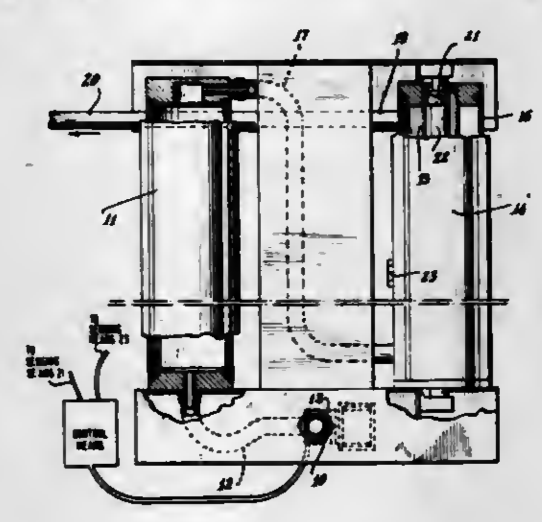

1. A control arrangement for fluid sterilizing apparatus provided with a light source being arranged to emit ultraviolet radiation through a chamber passed through by the liquid to be sterilized that has passed through a filter prior to entering said chamber comprising: a thermistor heat sensing means positioned adjacent to said light source, and and a photo thermistor light intensity sensing means for said light source being located at a predetermined distance from said light source, and a control means into which the respective outputs of each of said sensing means is connected, said control means having a valve whose input receives the aforementioned outputs to regulate the flow of liquid through said chamber, said two sensing means being so dimensioned and adjusted that liquid passes through said chamber only when the light source has sufficient sterilizing capability.

4,302,678

FLUORESCENT STANDARD FOR SCANNING DEVICES

Phillip W. Schiffert, Oak Park, Ill., assignor to Magnaflux Corporation, Chicago, Ill.

Filed Jan. 25, 1980, Ser. No. 115,510

Int. Cl.³ G01N *21/38;* **G01D** *18/00;* **G09K** *3/00*

U.S. Cl. 250—461 R **1 Claim**

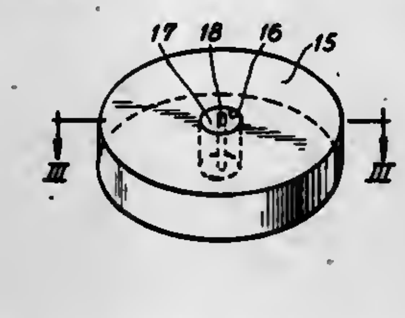

1. A standard specimen for calibrating an ultraviolet scanning system comprising:

a piece of borosilicate glass containing uranium oxide and having the characteristic of emitting fluorescent radiation upon excitation by ultraviolet light, and

a heat conductive carrier element rigidly supporting and encasing said piece of glass therein while leaving at least one surface of said glass exposed to ultraviolet radiation, said one surface being flush with a planar surface of said carrier element into which it extends.

4,302,679

METHOD OF DETERMINING THE X-RAY LIMIT OF AN ION GAUGE

David Edwards, Jr., Bellport, and Christopher P. Lanni, Shirley, both of N.Y., assignors to The United States of America as represented by the United States Department of Energy, Washington, D.C.

Filed Aug. 7, 1979, Ser. No. 64,594

Int. Cl.³ B01D *59/44;* **H01J** *49/26*

U.S. Cl. 250—489 **3 Claims**

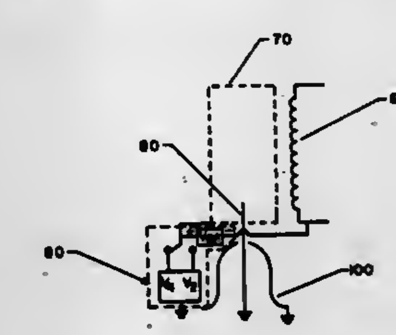

1. A method for determining the "x-ray limit", I_x, in an ion gauge of the Bayard-Alpert type having a short collector where the portion of ions collected is substantially dependent on the grid to collector potential, comprising the steps of:

(a) measuring the collector current, I_h, at a first, higher potential;

(b) measuring the collector current, I_l at a second, lower, potential; and

(c) determining I_x by the formula:

$$I_X = \frac{\alpha I_l - I_h}{(\alpha - 1)}$$

where α is the ratio of the collector current due to positive ions at said first potential to the collector current due to positive ions at said second potential.

4,302,680

COVER CONSTRUCTION FOR SHIELDING CONTAINERS FOR THE STORAGE AND TRANSPORATION OF IRRADIATED FUEL ELEMENTS

Stefan Ahner, Rodenbach; Hans-Günther Knackstedt, Langenselbold, and Peter Strostlik, Bruchkobel, all of Fed. Rep. of Germany, assignors to Transnuklear GmbH, Hanau, Fed. Rep. of Germany

Filed Jul. 6, 1979, Ser. No. 55,405

Claims priority, application Fed. Rep. of Germany, Aug. 7, 1978, 2830111

Int. Cl.³ G21F *5/00*

U.S. Cl. 250—506 **2 Claims**

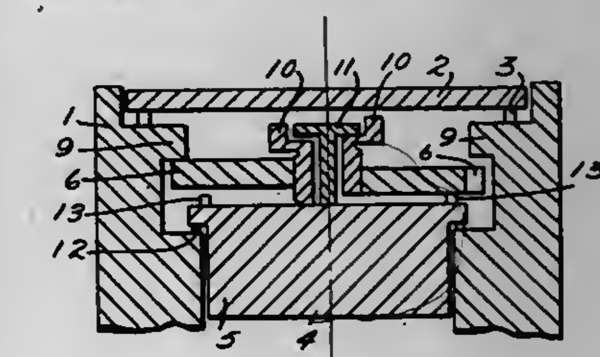

1. A cover construction for a shielding container for the transportation and/or storage of radioactive fuel elements comprising:

an outer transportation cover detachably, sealingly securable to an outer rim portion of the container;

an inner shielding cover comprising an inner cover portion having overlapping sealing engagement with an inner rim portion of the container and an outer cover portion movable inwardly and outwardly relative to said inner portion;

means defining a bayonet connection between said outer cover portion and the container; and

screw and stop means connecting said inner and outer cover portions whereby rotation of said screw means effects limited inward and outward relative movement between said outer and inner cover portions.

4,302,681

OPTO-ELECTRONIC READING APPARATUS

Peter A. Woodsford, and Beverley M. Ewen-Smith, both of Cambridge, England, assignors to Laser-Scan Laboratories Limited, Cambridge, England

Filed Jan. 18, 1980, Ser. No. 113,427

Claims priority, application United Kingdom, Jan. 29, 1979, 03059/79

Int. Cl.³ H04N *1/10*

U.S. Cl. 250—556 **18 Claims**

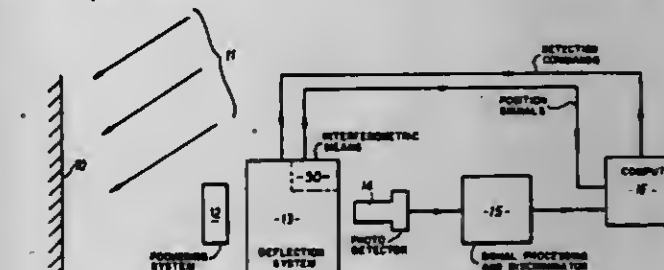

1. An opto-electronic reading apparatus comprising a light source arranged to illuminate a document disposed in a document holder a photo-electric detector to receive light reflected

or transmitted by such a document, there being between the document holder and the detector a deflection system to direct light from various areas of the document holder into the detector and an optical system to produce a focussed image of the document holder at the detector, the apparatus also comprising a control device connected so as to control the angle through which the deflection system deflects light entering the system and hence, to control the area of the document holder from which light enters the detector, and a signal processor arranged to receive signals from the detector and to transform them into digital data.

4,302,682

OCEAN THERMAL ENERGY CONVERSION SYSTEM

Bernard L. LaCoste, Wilmington, Del., assignor to Westinghouse Electric Corp., Pittsburgh, Pa.

Division of Ser. No. 918,127, Jun. 22, 1978. This application Aug. 10, 1979, Ser. No. 65,657

Int. Cl.³ B01D *3/06;* **F03G** *7/04;* **F01K** *21/06*

U.S. Cl. 290—1 R **1 Claim**

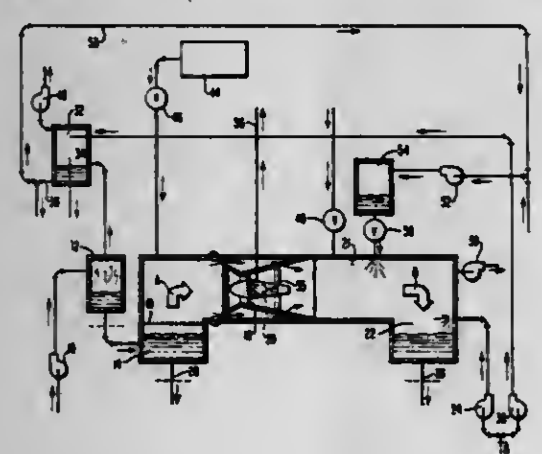

1. An ocean thermal energy conversion system comprising:

a flash evaporator for vaporizing water supplied thereto into steam, said steam being at a lower pressure than said water, said evaporator including means for separating the resulting steam and unflashed water;

first means for pumping relatively warm ocean water to said flash evaporator;

an orifice in fluid communication with the flash evaporator for returning warm water to the ocean;

an orifice in fluid communication with the condensing means for returning water therefrom to the ocean;

a supply of inert gas for purging the evaporation turbine and condenser of moist salt air;

turbine means for expanding steam within a subatmospheric pressure range of less than 15 pounds per square inch and converting its expansion energy into mechanical energy, said turbine means having a steam inlet and a steam outlet, said steam inlet being in fluid communication with said flash evaporator and said steam outlet constituting a port through which expanded steam is exhaustible;

means for condensing steam exhausted from said turbine means, said condensing means including an enclosing structure which is in fluid communication with said steam outlet, said condensing means including an intermingling apparatus for mixing relatively cold ocean water with the exhausted steam within the enclosing structure to cause the steam to condense;

means for selectively providing fluid communication between the flash evaporator and the condensing means in bypassing relation with the turbine means;

second means for pumping relatively cold ocean water to said condensing means intermingling apparatus; and

means driven by said turbine for generating electricity.

4,302,683

REACTION ENGINE DRIVEN ELECTRICAL GENERATING SYSTEM WITH POWER LOAD VARIATION CONTROL CAPABILITY

Von L. Burton, 1729 Redding Rd., Huntsville, Ala. 35806

Filed Mar. 7, 1980, Ser. No. 128,056

Int. Cl.³ F01D *1/18, 15/10;* **F02C** *3/16;* **F03B** *1/04*

U.S. Cl. 290—4 R **19 Claims**

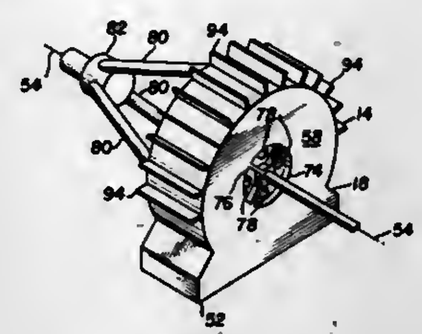

1. A reaction engine driven electrical generating system comprising:

electrical generator means included field windings and an armature for generating an electrical current upon rotation of the armature;

generally closed housing means positioned adjacent said electrical generator means;

drive means mounted within said housing means and connected to said armature for rotating said armature, said drive means including,

a drive shaft operably connected at one end to said armature and extending through a bearing and into said housing,

a reaction force rotation unit connected to the other end of said drive shaft within said housing,

mounting arms radially extending outwardly from said reaction force rotation unit,

reaction engine means connected to the other extremities of said mounting arms, within said housing,

disc inlet means connected to said drive shaft and radially extending outwardly therefrom into operative engagement with the inner periphery of an inlet port fashioned laterally within said housing means, said disc inlet means having a plurality of inlet apparatures radially offset with respect to said drive shaft;

conduit means extending between each of said disc inlet apertures and an intake of a respective reaction engine means;

exhaust means connected to said housing for collecting and directing exhaust away from said reaction engine means, said exhaust means including

peripherally closed exhaust deflector means mounted within said housing means coaxially about said drive shaft and radially adjacent to but spaced from said reaction engine means;

monitor means operably connected to said drive shaft means for determining the speed of rotation thereof and thus the thrust needed to drive said armature at a generally constant speed with varying loads drawn on the electrical generating system; and

fuel control means connected to said monitor means for regulating the amount of fuel input to said reaction engine means to maintain the level of thrust needed to drive said armature at a generally constant speed with varying electrical loads.

4,302,684

FREE WING TURBINE

Laird B. Gogins, 211 S. Sundrun Rd., Salt Lake City, Utah 84103

Filed Jul. 5, 1979, Ser. No. 54,875

Int. Cl.³ F03D *5/04;* **H02P** *9/04*

U.S. Cl. 290—55 **11 Claims**

1. Apparatus for generating electrical energy from kinetic energy inherent in movement of a fluid comprising:

guide track means disposed to have a major extent of its length across the path of flow of the direction of prevailing fluid flow,

at least one support assembly structure disposed for movement along said guide track means,

an air-foil member rotatably mounted upright on said support assembly structure,

guy wire means extending from an upper portion of said air-foil member to said support assembly structure to support said air-foil member upright thereon,

said air-foil structure being adapted to rotate on said support structure to a position with respect to the direction of fluid flow over said air-foil to obtain an optimum angle of attack with respect to the movment of fluid across said air-flow member,

thereby to move in a direction across the path of fluid move-

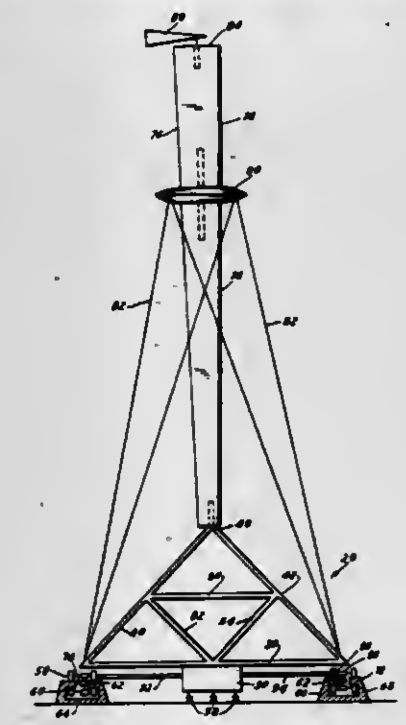

ment thereby to move said support assembly structure therewith,

wheel means associated with said support assembly structure and disposed for rolling movement along said guide track means,

said guide track means and said wheel means being cooperatively engaged to counteract any forces acting on said air-foil and support assembly structure tending to capsize said air-foil and support assembly structure, and

electrical energy generator means mounted on said support assembly structure,

said electrical energy generator means being operatively coupled to said wheel means whereby rotation of said wheel means along said guide track responsive to movement of said support assembly structure along said guide track operates said electrical energy generator means to generate electrical energy.

4,302,685

LINEAR OUTPUT STAGE FOR CHARGE-COUPLED CIRCUITS

Ernst Hebenstreit, Munich, Fed. Rep. of Germany, assignor to Siemens Aktiengesellschaft, Berlin & Munich, Fed. Rep. of Germany

Filed Sep. 6, 1979, Ser. No. 72,980

Claims priority, application Fed. Rep. of Germany, Sep. 13, 1978, 2839834

Int. Cl.³ G11C *19/28;* **H03K** *3/353;* **H01L** *29/78*

U.S. Cl. 307—221 D **5 Claims**

1. A linear output stage system for charge-coupled circuits, comprising: a charge coupled circuit on a semiconductor substrate; an output stage of the charge coupled circuit having an evaluator electrode over the substrate connecting to an input of a following stage; a switching transistor whose gate terminal is supplied with a switching pulse train means for blocking the switching transistor during a read-out process and switching it conductive for a specific length of time between two read-out processes, the switching transistor being inserted into the output stage between a pulse train line supplying a first shift pulse train and said evaluator electrode; said switching pulse train means occurring at a time such that prior to the read-out process said first shift pulse train is connected through to the

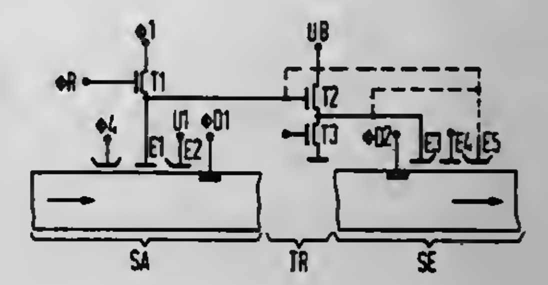

evaluator electrode so that when the evaluator electrode receives the signal charge it has a fixed bias rather than being floating, and during the read-out process the first shift pulse train is isolated from the evaluator electrode; and the output stage also having a follower electrode over the substrate in fixed connection to an auxiliary potential, and a diode means connected to a pulse train source supplying a first auxiliary pulse train for creating a given surface potential in the output stage.

4,302,686

CHARGE TRANSFER SERIAL-TO-PARALLEL CONVERTER

Richard D. Baertsch, and William E. Engeler, both of Scotia, N.Y., assignors to General Electric Company, Schenectady, N.Y.

Filed Jun. 23, 1980, Ser. No. 162,015

Int. Cl.³ G11C *19/28;* **H01L** *29/78*

U.S. Cl. 307—221 D **6 Claims**

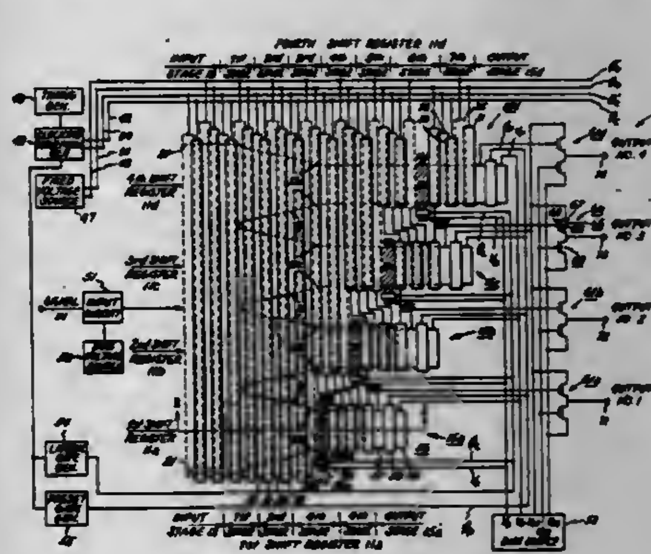

1. A serial-to-parallel converter comprising:

a plurality of charge transfer shift registers formed in parallel on a semiconductor substrate and consecutively numbered 1 to n, each shift register including a plurality of stages with the number of stages included in said shift registers varying linearly with shift register number with each successive shift register having a first fixed number of stages more than the preceding shift register,

transducer means for developing n pluralities of a sequence of n packets of charge, the packets of charge in each plurality representing successive samples of an input signal,

means for applying each of said pluralities of packets to a respective one of said plurality of shift registers, each

packet of a plurality being applied to a respective shift register in sequence,

clocking means for transferring charge in said shift registers from stage-to-stage thereof,

a plurality of drain stages, each coupled to an intermediate stage of a respective shift register, each intermediate stage being spaced a second fixed number of stages from the last stage of a respective shift register,

means for rendering said drain stages operative to drain all charges transferred into said intermediate stages over the clocking cycles of a sequence of said pluralities except for an interval including at least one clocking cycle thereof, whereby during said interval at least one packet of charge in each of said shift registers is passed to successive stages thereof,

means for detecting each of said packets of charge to develop simultaneously a plurality of outputs, each having an amplitude corresponding to the magnitude of a respective sample of said input signal.

4,302,687
SEMICONDUCTOR SWITCH
Tetsuo Yoshino; Tsuyotake Sawano, and Tokuo Takeuchi, all of Tokyo, Japan, assignors to Nippon Electric Co., Ltd., Japan
Filed Apr. 18, 1979, Ser. No. 31,131
Claims priority, application Japan, Apr. 20, 1978, 53-47270; Apr. 20, 1978, 53-47271; Jul. 6, 1978, 53-82782
Int. Cl.³ H03K *17/72*
U.S. Cl. 307—252 G **1 Claim**

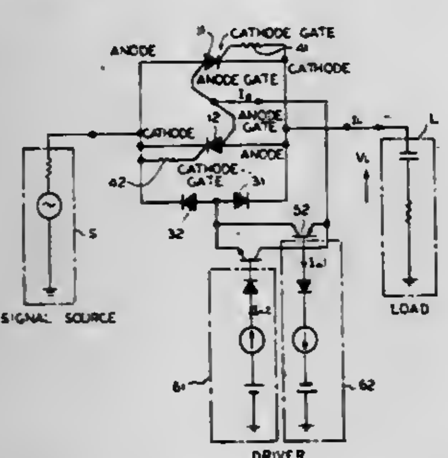

1. A semiconductor bidirectional switch circuit for passing an AC signal comprising:

a. a pair of four-terminal thyristors coupled in parallel and poled in the opposite direction, each of said thyristors having a cathode, an anode, and cathode and anode gates, said anode gates being commonly connected;

b. a pair of diodes coupled in series and poled in opposite directions, one end of each of said diodes being connected to the cathode gate of an individually associated and corresponding one of said thyristors;

c. resistance means coupled in parallel with the cathode gate and the cathode of the corresponding one of said thyristors;

d. a pair of amplifying means coupled between each common terminal of said pair of diodes and said anode gates, said pair of amplifying means having a PNP transistor and an NPN transistor connected in parallel;

e. first driver means including a first current source for supplying a current to the base of said NPN transistor; and

f. second driver means including a second current source for extracting a current from the base of said PNP transistor; whereby an input to at least one of said pair of amplifying means is maintained to provide a continuous gate current as long as the associated one of said thyristors is switched on.

4,302,688
SOLID-STATE RELAY
Jiri Havel, Rappersdorf; Dieter Schicketanz, Munich, and Hans Stut, Gröbenzell, all of Fed. Rep. of Germany, assignors to Siemens Aktiengesellschaft, Berlin and Munich, Fed. Rep. of Germany
Filed Jun. 11, 1979, Ser. No. 47,045
Claims priority, application Fed. Rep. of Germany, Jul. 25, 1978, 2832590
Int. Cl.³ H03K *17/72*
U.S. Cl. 307—252 J **2 Claims**

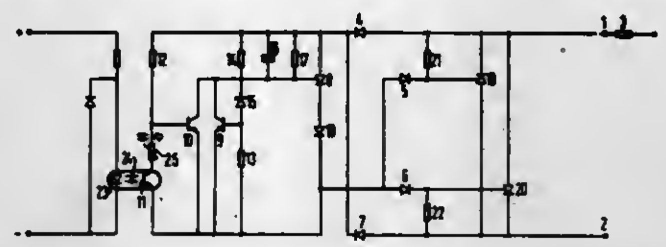

1. Solid-state relay with a full-wave rectifier bridge having d-c output terminals, a thyristor having a gate-cathode path, the anode and cathode of which being respectively connected to the output terminals of the rectifier bridge, a first and a second transistor each having a load circuit, the load circuits being shunted across the gate-cathode path of the thyristor, the control terminal of the first transistor being connected to a first and a second resistor, the first resistor being in turn connected to the anode of the thyristor, and the second resistor being in turn connected to the cathode of the thyristor, the control terminal of the second transistor being connected to a third resistor and to a control transistor, the third resistor being in turn connected to the anode of the thyristor, and the control transistor being connected to the cathode of the thyristor, comprising a Zener diode connected in series with the first resistor.

4,302,689
SAMPLE AND HOLD CIRCUIT
Benjamin T. Brodie, Edmonds, Wash., assignor to John Fluke Mfg. Co., Inc., Mountlake Terrace, Wash.
Filed Aug. 2, 1979, Ser. No. 62,922
Int. Cl.³ G11C *27/02*
U.S. Cl. 307—353 **10 Claims**

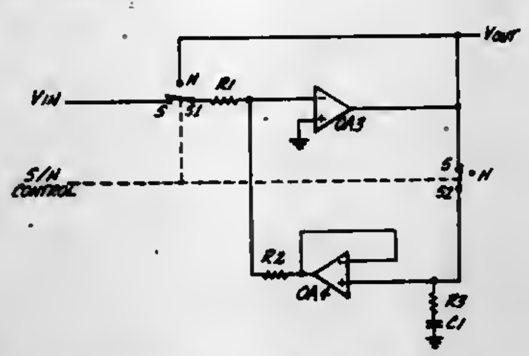

1. A sample and hold circuit having substantially zero offset voltage error comprising:

an input terminal;

first amplifier means having at least one input and an output;

first switch means for connecting either said input terminal or said output of said first amplifier means to said at least one input of said first amplifier means;

storage capacitor means;

second switch means for connecting said output of said first amplifier means to said storage capacitor means when said first switch means is connecting said input terminal to said at least one input of said first amplifier means;

an output terminal connected to said output of said first amplifier means; and,

second amplifier means having its input connected to said storage capacitor means and its output connected to said at least one input of said first amplifier means.

4,302,690
CMOS CIRCUIT FOR CONVERTING A TERNARY SIGNAL INTO TWO BINARY SIGNALS, AND USE OF THIS CMOS CIRCUIT
Wolfgang Gollinger, Gundelfingen; Joachim Grosse, March-Buchheim, and Arnold Uhlenhoff, Glottertal, all of Fed. Rep. of Germany, assignors to ITT Industries, Inc., New York, N.Y.
Filed Aug. 13, 1979, Ser. No. 66,265
Claims priority, application Fed. Rep. of Germany, Sep. 14, 1978, 2840006
Int. Cl.³ H03K *19/094*
U.S. Cl. 307—451 **12 Claims**

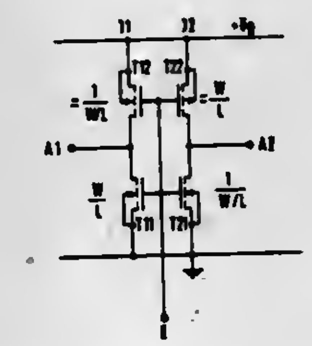

1. A circuit arrangement using monolithic integrated, complementary insulated-gate field-effect transistor technology serving to convert a ternary digital signal having three possible states into two binary digital signals having two possible states, comprising:

first and second CMOS inverters each being highly unsymmetrical with respect to the channel-width-to-length ratios;

a ternary-signal input connected to the interconnected inputs of said first and second CMOS inverters;

the N-channel transistor of the first CMOS inverter and the P-channel transistor of the second CMOS inverter have both either a small or a large W/L ratio, whereas the P-channel transistor of the first CMOS inverter and the N-channel transistor of the second CMOS inverter have both either a large or small W/L ratio and the output of said first and the output of the second CMOS inverter are the outputs for the two digital signals.

4,302,691
INTEGRATED DELAY CIRCUIT WITH PN-JUNCTION CAPACITOR
Mark E. Kelley, Worcester, Mass., assignor to Sprague Electric Company, North Adams, Mass.
Filed Dec. 12, 1979, Ser. No. 102,714
Int. Cl.³ H03K *5/13*
U.S. Cl. 307—592 **7 Claims**

1. An integrated silicon circuit providing signal time delay comprising:

(a) a pair of DC power supply busses;

(b) a bipolar output transistor having an emitter that is non-resistively connected to one of said busses, and having a collector that is connected through an output load to the other of said busses;

(c) a bipolar input transistor having an emitter non-resistively connected to said one buss, and having a base connected to an input conductor, said emitters of said bipolar transistors having the same impurity polarity type as is the intended voltage polarity of said one buss relative to said other buss;

(d) a PN junction to serve back-biased as a capacitor having one electrode connected to the base of said output transistor, the impurity polarity-type of said one electrode being the same as that of said output transistor base;

(e) a capacitor-charging-resistor being connected between said other buss and the other electrode of said capacitor;

(f) at least one diode being connected in a series circuit with said input transistor, collector to emitter, in such a polarity as to conduct at the same time that the base-emitter junction of said input transistor conducts, said series circuit

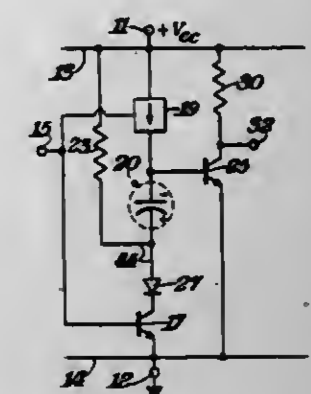

being connected between said other capacitor electrode and said one buss; and

(g) a gated current source means being connected between said other buss and said one capacitor electrode, the gate control portion thereof being connected to said input conductor, for discharging said capacitor at a predetermined rate when said input transistor is conducting, whereby said capacitor must be about completely discharged before said output transistor begins to conduct.

4,302,692
ROTATIONAL SPEED SIGNAL SENSOR
Hisayuki Matsumoto; Usebo Niimi, both of Hirakata, and Shuichi Obata, Kyoto, all of Japan, assignors to Matsushita Electric Industrial Co., Ltd., Osaka, Japan
Filed May 23, 1979, Ser. No. 41,823
Claims priority, application Japan, Feb. 6, 1978, 53-67035; Feb. 6, 1978, 53-67036; Feb. 6, 1978, 53-67037; Feb. 6, 1978, 53-67039
Int. Cl.³ H02K *47/04*
U.S. Cl. 310—113 **13 Claims**

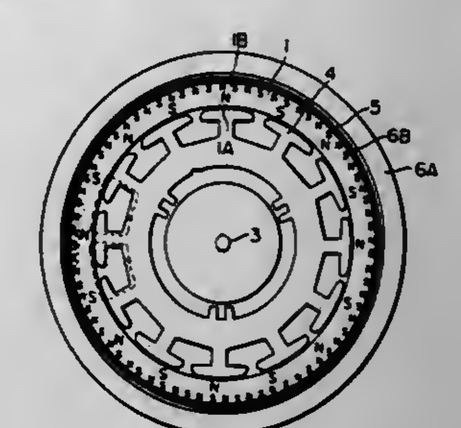

1. A rotational speed signal sensor, comprising:

(a) an annular rotating magnet whose one cylindrical surface has a first series of a number of n magnetic poles equiangularly spaced apart in the circumferential direction and whose other cylindrical surface has a second series of a number of m magnetic poles equiangularly spaced apart from each other in the circumferential direction, where m>n,

(b) a stator having stator windings which are securely held in position in opposed relationship with said first magnetic pole series of said rotating magnet so as to deliver a rotating force thereto,

(c) a sensor coil having sensing windings which are located

at angular positions corresponding to the pitch of said second magnetic pole series and which are interconnected in a zig-zag form, and

(d) a supporting member for supporting said sensor coil in the form of a ring in such a way that said sensor coil may be in opposed relationship with said second magnetic pole series of said rotating magnet and radially spaced apart by a predetermined distance therefrom,

whereby said first magnet pole series may coact with said stator so as to generate the rotating force while said second magnetic pole series may coact with said sensor coil, which is maintained in the form of a ring, so as to derive the rotational speed signal.

4,302,693
WEDGE SHAPED PERMANENT MAGNET ROTOR ASSEMBLY WITH MAGNET CUSHIONS

Lyman R. Burgmeier, Cypress; Frederick B. McCarty, San Pedro, and Alexander Silver, Tarzana, all of Calif., assignors to The Garrett Corporation, Los Angeles, Calif.

Filed Dec. 26, 1978, Ser. No. 973,343
Int. Cl.³ H02K *21/12*

U.S. Cl. 310—156 **27 Claims**

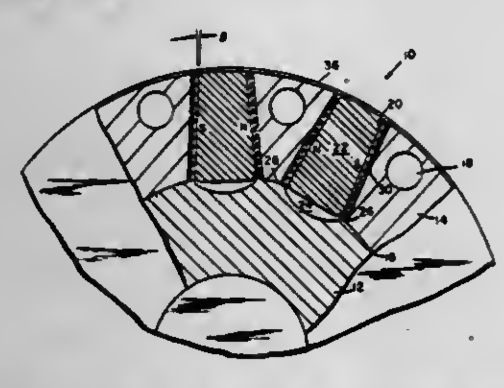

1. A permanent magnet rotor assembly comprising:
a rotatable hub;
a plurality of inwardly converging wedge-shaped support members equally spaced around the periphery of said hub and affixed thereto;
a plurality of outwardly converging wedge-shaped permanent magnets located between said support members;
plastically deformable cushion means located between said support members and said magnets for uniformly distributing the compressive stresses existing between said support members and said magnets.

4,302,694
COMPOSITE PIEZOELECTRIC TUNING FORK WITH ECCENTRICLY LOCATED ELECTRODES

Satoru Fujishima, Muko, and Takeshi Nakamura, Uji, both of Japan, assignors to Murata Manufacturing Co., Ltd., Japan

Filed Sep. 5, 1979, Ser. No. 72,341
Claims priority, application Japan, Sep. 12, 1978, 53-112655
Int. Cl.³ H01L *41/08*

U.S. Cl. 310—321 **6 Claims**

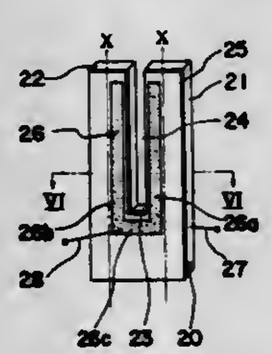

1. A piezoelectric tuning fork, comprising:
a generally planar vibrator means made of an electrically conductive non-piezoelectric material, said vibrator means having two opposed major surfaces and having two prongs and a base portion, said prongs extending from said base portion in generally the same direction and defining a gap between them, and each of said prongs being divided by an imaginary longitudinal center line into an inner and an outer side, said inner side of each prong being adjacent to said gap and said outer side of each prong being remote from said gap;
a first piezoelectric layer disposed on one of said opposed major surfaces and covering said one major surface substantially completely;
a first U-shaped electrode layer disposed on said first piezoelectric layer and having two arm portions and a central portion, each of said arm portions overlying a respective one of said prongs, each of said arm portions being substantially on one side of said center line of its respective prong, and said arm portions being about equally remote from said gap in a direction perpendicular to said direction in which said prongs and said gap extend, said first electrode layer being the only electrode layer disposed on said piezoelectric layer; and
said tuning fork having a first terminal connected to said first electrode, and having a second terminal connected to said tuning fork at such a location that an electrical signal applied to either of said terminals must pass through said first electrode, said first piezoelectric layer, and said vibrator means to reach the other said terminal.

4,302,695
SUPPORT ARRANGEMENT FOR A FLEXIBLE SOUND GENERATING DIAPHRAGM

Robert L. Boyles, Milford, and Samuel Polonsky, Monroe, both of Conn., assignors to General Electric Company, New York, N.Y.

Filed Nov. 16, 1979, Ser. No. 94,965
Int. Cl.³ H01L *41/08*

U.S. Cl. 310—324 **4 Claims**

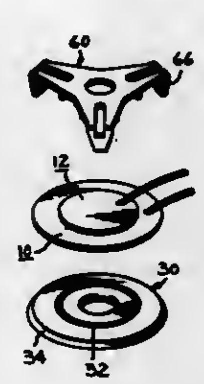

1. A sound generating device comprising:
a flexible diaphragm having a central axis,
a substantially rigid support member axially located on a first side of said diaphragm, said support member having an annular ridge projecting axially therefrom into contact with said diaphragm, the diameter of said annular ridge being equal to the diameter of a node circle of vibration of said diaphragm,
a clamping spider axially located on a second side of said diaphragm, said clamping spider having a hub portion and a plurality of resilient leg portions extending radially outwardly of said hub portion, each of said leg portions having at least one support element projecting axially therefrom into contact with said diaphragm, said support elements being disposed in a circular array having the same diameter as said annular ridge,
means interconnecting said support members and each of said leg portions radially outwardly of said diaphragm, said interconnecting means resiliently biasing said leg portions toward said diaphragm such that said diaphragm is supported between said annular ridge and said support elements, and
means for vibrating said diaphragm to produce sound, said means for vibrating said diaphragm comprising a piezoelectric electromechanical transducing element coaxially attached to said diaphragm and projecting axially therefrom toward a selected one of said support member and said clamping spider, said piezoelectric element having a circular periphery of a diameter to closely fit within the inner diameter of the facing one of said annular ridge and said array of support elements, whereby assembly of the sound generating device with said piezoelectric element located within the respective one of said annular ridge and said group of support elements assures that said diaphragm is clamped between said support member and said clamping spider on said node circle of vibration of said diaphragm.

4,302,696
GAMMA-RAY COMPENSATED IONIZATION CHAMBER

Naoaki Wakayama, Tokai; Toshimasa Tomoda, and Shinji Fukakusa, both of Amagasaki, all of Japan, assignors to Mitsubishi Denki Kabushiki Kaisha and Japan Atomic Energy Research Institute, both of Tokyo, Japan

Filed Jul. 10, 1979, Ser. No. 56,265
Claims priority, application Japan, Jul. 19, 1978, 53-88150
Int. Cl.³ H01J *47/02, 47/08*

U.S. Cl. 313—93 **5 Claims**

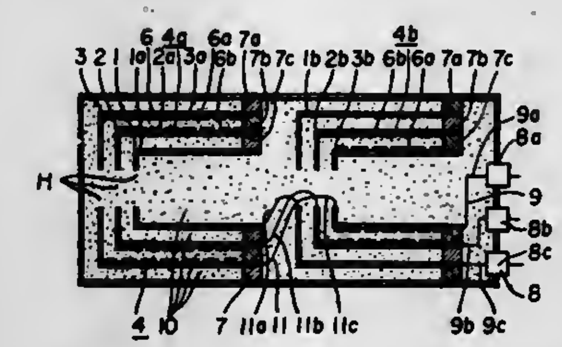

1. A gamma-ray compensated ionization chamber which comprises cylindrical multiplex electrodes consisting of a cylindrical high voltage electrode, a cylindrical signal electrode and a cylindrical compensation electrode which are coaxially located with respect to a casing holding said multiplex electrodes and containing an ionizable gas in a sealed condition between the electrodes, an improvement characterized in that said cylindrical multiplex electrodes are divided at a midpoint in the length of said cylindrical multiplex electrodes into at least two sections of multiplex electrodes; one of said at least two sections being arranged so that the high voltage electrode thereof is located adjacent the casing and the compensation electrode thereof is located adjacent the axis of said casing, and the other of said at least two sections being arranged so that the compensation electrode is located adjacent the casing and the high voltage electrode is located adjacent the axis of said casing.

4,302,697
PRESSURE RELIEF HOLE SEAL FOR A SEALED-BEAM HEADLAMP

Nickolas P. Demas, Cranford; James E. Bair, Millington, and Robert A. Grunder, Cranford, all of N.J., assignors to Wagner Electric Corporation, Parsippany, N.J.

Filed Nov. 19, 1979, Ser. No. 95,405
Int. Cl.³ H01K *1/28, 3/26*

U.S. Cl. 313—113 **3 Claims**

1. In a sealed beam headlamp assembly of the type having a tungsten-halogen bulb, a reflector, and lens, said reflector and lens having rims joined together by a hermetic seal the improvement comprising:
(a) a pressure relief hole positioned in said reflector;
(b) a deformable metal pellet deformably-press fitted into said pressure relief hole whereby a temporary hermetic seal is formed; and

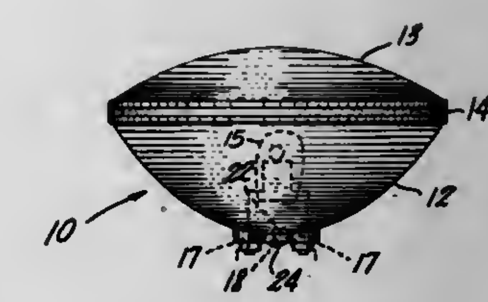

(c) a heat cured epoxy resin seal in said pressure relief hole over said pellet.

4,302,698
DUAL-FILAMENT HALOGEN INCANDESCENT LAMP, PARTICULARLY SEALED-BEAM, AUTOMOTIVE HEADLIGHT

Rolf Kiesel, Königsbronn, and Manfred Gaugel, Fürstenfeldbruck, both of Fed. Rep. of Germany, assignors to Patent-Treuhand-Gesellschaft für elektrische Glühlampen m.b.H., Stuttgart, Fed. Rep. of Germany

Filed Sep. 17, 1979, Ser. No. 76,421
Claims priority, application Fed. Rep. of Germany, Sep. 22, 1978, 2841347
Int. Cl.³ H01K *00/00*

U.S. Cl. 313—222 **8 Claims**

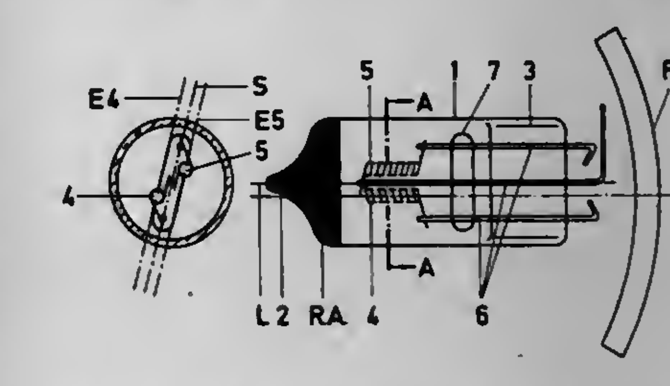

1. Automotive head lamp dual-filament halogen incandescent lamp in combination with a reflector structure (R) having a reflector axis (R.A.) comprising
a lamp bulb (1) having a longitudinal lamp axis (L);
two longitudinally spiral filament (4,5) positioned within the lamp bulb (1) parallel to the longitudinal axis (L) of the bulb;
at least three current supply wires (6, 6', 8) positioned in a lamp bulb and respectively connected to the respective filaments to permit, selectively, individually energization of the two filaments;
a bridge (7) extending across the lamp bulb, at least two of the current supply wires passing through the bridge;
wherein transverse
the two filaments (4,5) are in mutual essential/alignment with respect to the longitudinal extent of the filament;
one filament (4) is located laterally to one side of the longitudinal axis (L) of the bulb and the other filament (5) is located laterally to the other side of the longitudinal axis

(L) of the bulb, and is in a plane passing through said one filament and the axis (L) of the bulb;
said filaments (4,5) are located in planes which are parallel to the plane of symmetry (S) of the lamp; and
the longitudinal axis (L) of the lamp bulb is parallel to and offset from the reflector axis (R.A.).

4,302,699
LOW WATTAGE METAL HALIDE ARC DISCHARGE LAMP HAVING OPTIMUM EFFICACY
William M. Keeffe, Rockport, and Harold L. Rothwell, Jr., Rowley, both of Mass., assignors to GTE Products Corporation, Stamford, Conn.
Filed Mar. 24, 1980, Ser. No. 132,932
Int. Cl.³ H01J *61/18*
U.S. Cl. 313—229 **5 Claims**

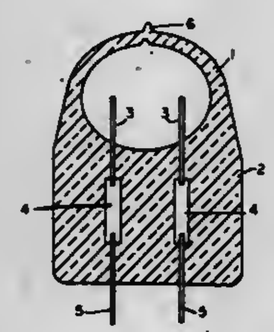

1. A single-ended low wattage metal halide arc discharge lamp comprising: an arc tube having a press seal at one end thereof, two main electrodes embedded in the press seal and extending into the arc tube, the arc tube containing mercury, sodium halide, scandium, scandium halide and a starting gas, the molar ratio of sodium halide to scandium halide during normal operation being between about 5 to 8 in order to obtain optimum luminous efficacy.

4,302,700
ELECTRODE GUIDE FOR METAL PAPER PRINTERS
Armin Bohg, Neuweiler, and Kurt Hartmann, Calw-Heumaden, both of Fed. Rep. of Germany, assignors to International Business Machines Corporation, Armonk, N.Y.
Filed Dec. 7, 1979, Ser. No. 101,359
Claims priority, application Fed. Rep. of Germany, May 21, 1979, 2920569
Int. Cl.³ H01J *1/88, 19/42;* **H01K** *1/18*
U.S. Cl. 313—292 **4 Claims**

1. An electrode guide for a metal paper printer comprising:
a body of silicon having a plurality of parallel V-shaped grooves crystallographically etched therein, each said groove being capable of receiving an elongate wire electrode.

4,302,701
DIRECTLY HEATED CATHODE FOR AN ELECTRON TUBE WITH COAXIAL ELECTRODE DESIGN
Ingo Beling, Berlin, Fed. Rep. of Germany, assignor to Siemens Aktiengesellschaft, Berlin & Munich, Fed. Rep. of Germany
Filed Aug. 27, 1979, Ser. No. 69,868
Claims priority, application Fed. Rep. of Germany, Aug. 31, 1978, 2830020
Int. Cl.³ H01J *1/46, 21/10*
U.S. Cl. 313—293 **4 Claims**

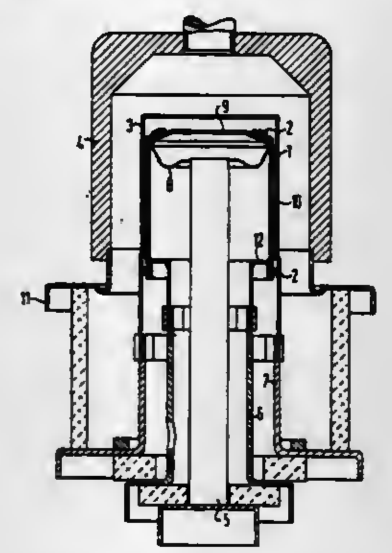

1. A directly heated cathode for electronic transmitting tubes with coaxial design of the electrodes and their lead-ins, said cathode comprising a hollow cylinder (1) arranged axially and having first and second axial ends, an annular cathode lead (6, 12) secured to the first axial end of the hollow cylinder (1), a cathode cap (9) secured to the second axial end of the hollow cylinder (1), a power supply lead (5) extending coaxially in the hollow cylinder (1) and being connected with said cathode cap (9), said cathode cap (9) being mounted at an inner axial end of said power supply lead (5), the hollow cylinder (1) being formed of pyrolytic graphite and being coated with a thin metallic layer (10) as emission layer, characterized in that the thin metallic layer (10) is of tungsten carbide and thorium.

4,302,702
THERMIONIC CATHODE HAVING AN EMBEDDED GRID, PROCESS FOR ITS FABRICATION, AND HIGH FREQUENCY ELECTRON TUBES USING SUCH A CATHODE
Jean Montgaillard, and Arvind Shroff, both of Paris, France, assignors to Thomson-CSF, Paris, France
Filed May 9, 1978, Ser. No. 904,240
Claims priority, application France, May 13, 1977, 77 14773
Int. Cl.³ H01J *1/46, 17/04, 19/38, 21/10*
U.S. Cl. 313—348 **9 Claims**

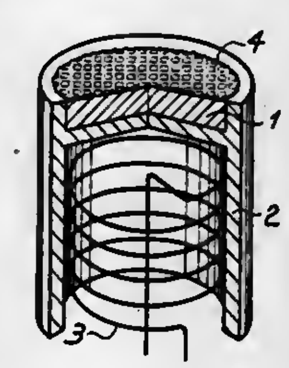

1. A thermionic cathode with an embedded grid comprising a cathode body of porous tungsten with an emissive activator and having at an emissive surface of the cathode non-emissive zones; said zones being of a center cubic crystalline material and having at least one face having a crystal plane of 100 to 110 whose work function is higher than that of the cathode body; said face being parallel to the emissive surface of the cathode.

4,302,703
VIDEO STORAGE SYSTEM
Eugene I. Gordon, Convent Station, N.J., assignor to Bell Telephone Laboratories, Incorporated, Murray Hill, N.J.
Continuation of Ser. No. 875,253, Nov. 10, 1969, abandoned. This application Dec. 20, 1971, Ser. No. 209,990
Int. Cl.³ H01J *29/50*
U.S. Cl. 315—13 ST **18 Claims**

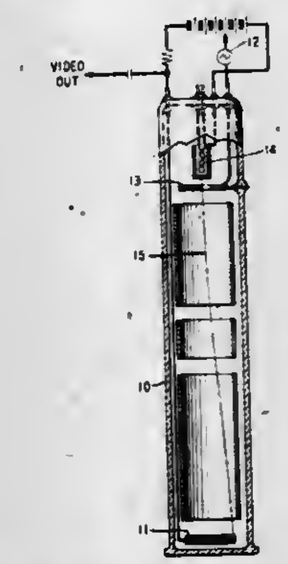

11. An electronic storage tube including a target which is comprised of a pattern of conducting and insulating areas, the tube comprising:
means for applying a signal to the target to establish a desired stored charge distribution on the insulating areas; and
means for detecting the stored charge distribution established on the target; and wherein
the conducting areas are electrically connected to each other and are formed of silicon; and
the insulating areas are formed of silicon dioxide.

4,302,704
POSTACCELERATION CATHODE RAY TUBE WITH A SCAN EXPANSION LENS
Kimiharu Saito, Niiza, Japan, assignor to Iwatsu Electric Co., Ltd., Tokyo, Japan
Filed Oct. 5, 1979, Ser. No. 82,148
Claims priority, application Japan, Oct. 18, 1978, 53-127951
Int. Cl.³ H01J *29/70*
U.S. Cl. 315—17 **12 Claims**

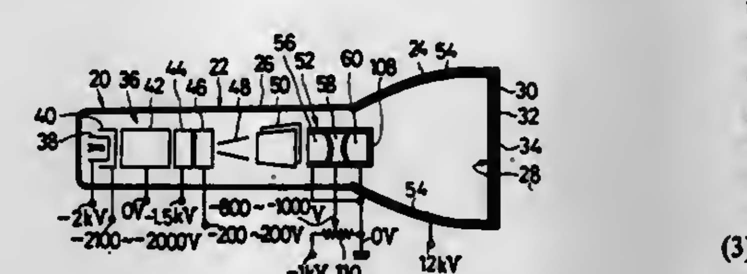

1. A cathode ray tube of the type having a target, an electron gun for producing a beam of electrons directed toward the target, deflection means disposed along the path of the beam for deflecting the beam in two orthogonal directions, and a postaccelerating electrode surrounding the path of the beam on its way from the deflection means to the target, wherein the improvement comprises:
(a) a scan expansion lens system disposed between the deflection means and the target and in such a position that at least the target-side end of the lens system is acted upon by the field of the postaccelerating electrode, the lens system comprising:
(1) first, second, and third tubular electrodes of substantially rectangular cross-sectional shape disposed in axial alignment to permit the passage of the beam therethrough and spaced apart from one another with a gap sufficient to provide electrical insulation therebetween, each electrode having a beam entrance end directed toward the electron gun and a beam exit end directed toward the target;
(2) the first electrode comprising a first pair of opposite sides disposed in one of said two orthogonal directions and a second pair of opposite sides disposed at right angles with the first pair of opposite sides, the beam exit ends of the first pair of opposite sides being each curved in an arc that is convex in a first direction;
(3) the second electrode comprising a third pair of opposite sides disposed in said one of the orthogonal directions and a fourth pair of opposite sides disposed at right angles with the third pair of opposite sides, the beam entrance ends of the third pair of opposite sides being each curved in an arc that is convex in said first direction and which is in conformity with the arcs of the beam exit ends of the first pair of opposite sides of the first electrode, the beam exit ends of the third pair of opposite sides being each curved in an arc that is convex in a second position opposite to said first direction;
(4) the third electrode comprising a fifth pair of opposite sides disposed in said one of the orthogonal directions and a sixth pair of opposite sides disposed at right angles with the fifth pair of opposite sides, the beam entrance ends of the fifth pair of opposite sides being each curved in an arc that is convex in said second direction and which is in conformity with the arcs of the beam exit ends of the third pair of opposite sides of the second electrode;
(5) the third electrode further comprising an end plate closing the beam exit end thereof, the end plate having formed therein an aperture which is elongated in said one of the orthogonal directions and whose geometrical center substantially coincides with the axis of the beam passing the aperture without being deflected by the deflection means;
(b) means for applying such electrical potentials to the first, second, and third electrodes of the lens system and to the postaccelerating electrode that there are created:
(1) a diverging electron lens within the lens system to act on the beam in said one of the orthogonal directions;
(2) a first converging electron lens within the lens system to act on the beam in the other of the orthogonal directions for focusing the beam at a point before the aperture in the end plate of the third electrode, the first converging electron lens converging the beam to a greater extent when the beam is deflected by the deflection means in said other of the orthogonal directions than when the beam is not deflected in said other of the orthogonal directions; and
(3) a second converging electron lens adjacent the aperture in the end plate of the third electrode to act on the beam in said other of the orthogonal directions as the beam enters the second converging electron lens in a diverging state after being converged by the first converging electron lens, the second converging electron lens being created owing to a potential difference between the third electrode of the lens system and the postaccelerating electrode and converging the beam to a greater extent when the beam is not deflected by the deflection means in said other of the orthogonal directions than when the beam is deflected in said other of the orthogonal directions.

4,302,705

CAPACITIVE COUPLING DEVICE FOR AN ELECTRON TUBE

Michel Benoit, and Pierre Gerlach, both of Paris, France, assignors to Thomson-CSF, Paris, France

Filed Sep. 18, 1979, Ser. No. 76,775

Claims priority, application France, Sep. 22, 1978, 78 27254

Int. Cl.³ H01J *7/46, 19/80*

U.S. Cl. 315—39 5 Claims

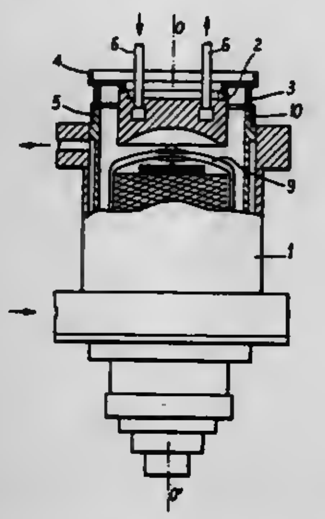

1. An electron tube having a capacitive coupling comprising in a vacuum envelope, an anode, and at least one grid, said grid having a top cap, and which in operation there is an electron bombardment towards the anode; a coupling electrode mounted with a least one face within the vacuum envelope, said face adjacent to the top cap of said grid; said electrode and grid providing said capacitive coupling an insulator for insulating said coupling electrode from the anode, said insulator being located in a zone which is not in a direct line of access to that zone of the tube which is subjected to electron bombardment; a first connector between the insulator and the coupling electrode, and a second connector between the insulator and the anode, said connectors being adapted for providing external connections to the tube.

4,302,706

GLASS-TO-GLASS SEALING METHOD WITH CONDUCTIVE LAYER

Richard DuBois, North Caldwell, N.J., assignor to Wagner Electric Corporation, Parsippany, N.J.

Division of Ser. No. 918,084, Jun. 22, 1978, Pat. No. 4,206,382. This application Jan. 14, 1980, Ser. No. 111,858

Int. Cl.³ H05B *41/30*

U.S. Cl. 315—169.1 3 Claims

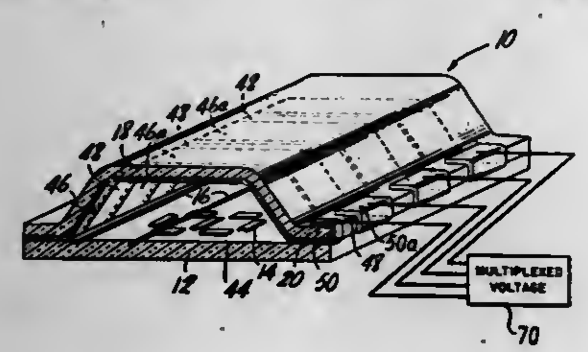

1. A method of sequentially multiplexing the glow of a plurality of characters in a multicharacter vacuum fluorescent display device of the type having anodes on a substrate, a filament and a glass cover plate sealed by a seal to said substrate forming between them a sealed enclosure, comprising the steps of:

(a) placing independently energizeable, transparent, conductive layers on said glass cover plate, at least a portion of each respectively facing each of said characters, said layers being on the opposite side of said filament from said anodes;

(b) extinguishing the glow on all but a first of said characters by placing a positive voltage on the said conductive layers facing all the other characters;

(c) energizing said first character by placing a voltage on the conductive layer facing it that is less positive than said positive voltage;

(d) continuously sequencing through the energization of each of said characters; and

(e) completing one sequence through the energization of said characters in less than 100 milliseconds.

4,302,707

ELECTRIC FLASH DISCHARGE DEVICE

Shinichiro Hattori, Tokyo, Japan, assignor to Olympus Optical Co., Ltd., Tokyo, Japan

Filed Feb. 27, 1980, Ser. No. 124,976

Claims priority, application Japan, Mar. 7, 1979, 54-26579

Int. Cl.³ H05B *41/32*

U.S. Cl. 315—241 P 6 Claims

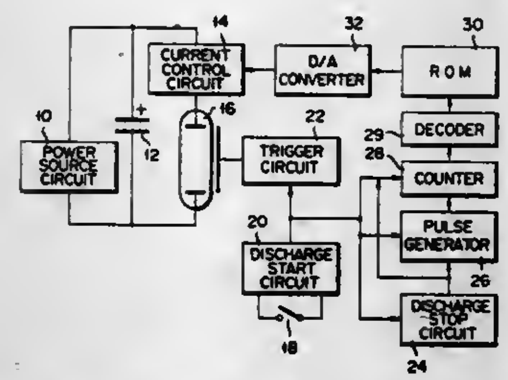

1. An electric flash discharge device comprising:

a source of electric power;

a capacitor coupled to said source of electric power so as to be charged by said power source;

trigger means including an operating member for producing a trigger signal in response to the actuation of the actuating member;

a discharge tube coupled to said capacitor and to said trigger means so as to be triggered in response to the trigger signal to form a discharge circuit for said capacitor;

control signal generating means for generating a control signal responsive to generation of said trigger signal by said trigger means; and

current control means coupled between said capacitor and said discharge tube and also to said control signal generating means, said current control means being responsive to said control signal for controlling the discharge current of said capacitor flowing through said discharge tube as a function of said control signal so that said discharge current gradually increases from a low value to a peak value after initiation of the discharge.

4,302,708

DEFLECTION AMPLIFIER SYSTEM FOR RASTER SCANNED CATHODE RAY TUBE DISPLAYS

Thomas W. Spilsbury, Phoenix, Ariz., assignor to Sperry Corporation, New York, N.Y.

Filed Mar. 31, 1980, Ser. No. 135,372

Int. Cl.³ H01J *29/70*

U.S. Cl. 315—389 6 Claims

6. Cathode ray display horizontal deflection apparatus for generating a raster scanned display field having selectively variable scan parameters, said apparatus being of the transformer coupled, resonant fly back switch type and being self-adaptive to selection of said selected scan parameters comprising:

horizontal deflecting coil means,

resonant fly back switch means coupled with said deflection coil means for controlling the sweep current therethrough,

sweep generator means for generating a substantially linear sweep signal,

transformer means having an input responsive to a pulse wave of a predetermined frequency and an output coupled with both said fly back switch means and said sweep generator means,

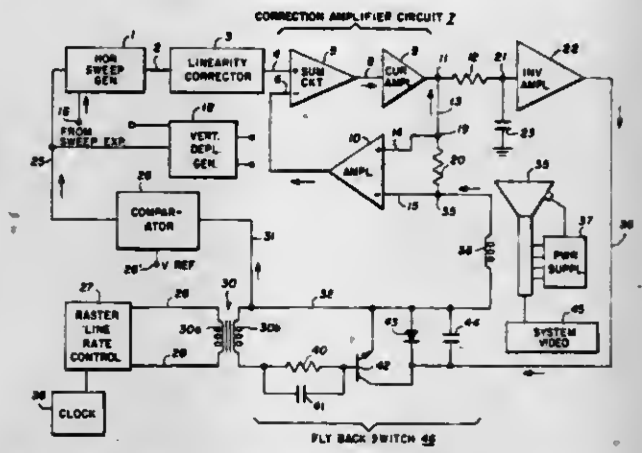

deflection coil current sampling means,

differential means responsive to said sweep signal and said current sample means for providing an error signal, and

means responsive to said error signal for further controlling said resonant fly back switch means for varying said deflection coil current in a manner to reduce said error signal to zero.

4,302,709

VIBRATING DEVICE WITH MOTIONLESS FRAME

Jean-Claude Tichtinsky, Orsay, France, assignor to Office National d'Etudes et de Recherche Aerospatiales, Chatillon, France

Filed Dec. 10, 1979, Ser. No. 101,740

Claims priority, application France, Dec. 14, 1978, 78 35265

Int. Cl.³ H01L *41/10*

U.S. Cl. 318—116 12 Claims

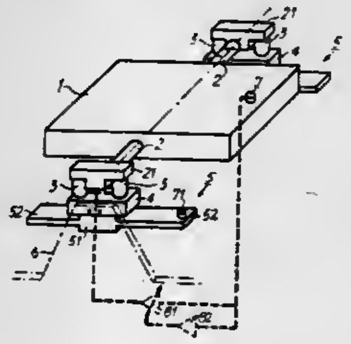

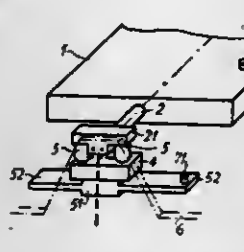

1. A vibrating device for processing an optical beam including:

a main mechanical resonator comprising an optical member receiving said optical beam, resilient means having at least one degree of freedom, and means for connecting said optical member to said resilient means;

a frame;

vibration generator means for impressing upon said optical member relative to said frame a resonant vibratory motion having the said degree of freedom, the frequency of which is that of the main resonator;

an auxiliary mechanical resonator including a set of resilient blades extending on opposite sides of a thick block and dimensioned in order to oscillate at the natural frequency of the main resonator, said auxiliary mechanical resonator having the same degree of freedom as, and vibrating in phase opposition to the main mechanical resonator in order that the periodic mechanical stresses applied respectively by the two resonators to a portion of the frame have at any instant one and the same direction and opposite senses; and

means for connecting one of said main and auxiliary resonators to said portion of the frame.

4,302,710

SUN TRACKING CONTROLLER

Howard K. Menser, and Robert D. Newcomb, both of Plymouth, Ind., assignors to Menser Industries, Plymouth, Ind.

Filed Nov. 1, 1979, Ser. No. 90,412

Int. Cl.³ G01T *1/16*

U.S. Cl. 318—117 9 Claims

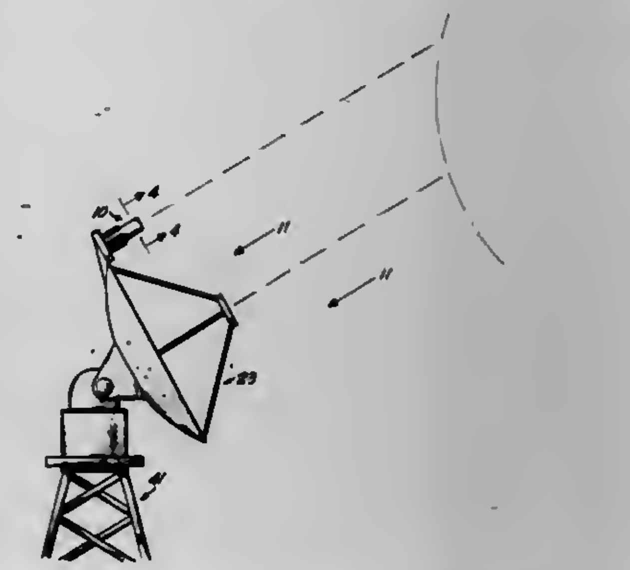

1. A sun tracking controller for use in conjunction with a solar energy collector or other solar device which is adapted to be aimed at the sun by electrically controlled actuators comprising,

a control head exposed to receive sun rays,

electrical means responsive to said control head and controlling said actuators for causing movement of a solar device in response to changes of the orientation of the sun from morning dawn to nightfall,

said control head including a base,

an opaque post supported and projecting from said base,

a plurality of light conductors carried by said base alongside and substantially equally spaced around said post and of shorter length than said post,

and an electromagnetic radiation responsive electrical device associated with each conductor and with said electrically controlled actuators.

4,302,711

DC SERVOMOTOR CIRCUIT HAVING DRIVE CURRENT CONTROLLED AS A FUNCTION OF MOTOR SPEED

Alfred H. Morser, 23 Whitehorn La., Letchworth, England (SG6,2DN), and Paul Szekely, 35 Hare Crescent, Watford, England

Continuation of Ser. No. 834,844, Sep. 20, 1977, abandoned. This application Feb. 26, 1979, Ser. No. 14,980

Int. Cl.³ H02P *5/16*

U.S. Cl. 318—327 6 Claims

1. An apparatus for predetermining the maximum current supplied by a drive circuit to a bidirectional DC motor coupled

to a tachometer providing a tachometer signal having a magnitude representing the actual motor speed and a polarity representing the actual direction of motor rotation, said drive circuit being controlled by the magnitude and polarity of a bipolar speed error signal generated by a comparator in response to the algebraic difference between the tachometer signal and velocity command signal, said command signal having a magnitude representing the desired motor speed and a polarity representing the desired direction of motor rotation, the apparatus comprising a bipolar limiting means having an input responsive to the tachometer signal and an output connected between the comparator and the drive circuit for limiting the magnitude of the speed error signal to positive and negative limiting levels for both polarities of the tachometer signal, said limiting means causing the magnitude of the limiting level to be

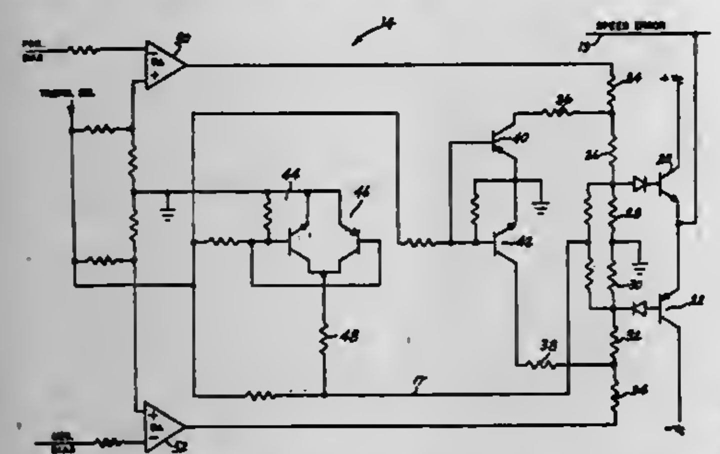

(1) varied continuously in accordance with a plurality of linear functions, and in response to the tachometer and command signals having polarities representing the same direction of motor rotation, each linear function controlling over a portion of the full speed range of the motor to produce a nearly exponential profile of motor current, and
(2) directly proportional to the tachometer signal in response to the polarity of the tachometer signal representing a direction of motor rotation opposite the direction of motor rotation being represented by the polarity of the command signal, whereby the maximum current available to the motor is predetermined exclusively by the speed error signal over the full speed range of the motor.

4,302,712
METHOD OF MINIMIZING RESONANCE IN STEPPING MOTOR AND IMPROVED DRIVER THEREFOR
Eric K. Pritchard, 1702 Plymouth Ct., Bowie, Md. 20716
Filed Feb. 27, 1980, Ser. No. 125,297
Int. Cl.³ H02D *5/40*
U.S. Cl. 318—490 13 Claims

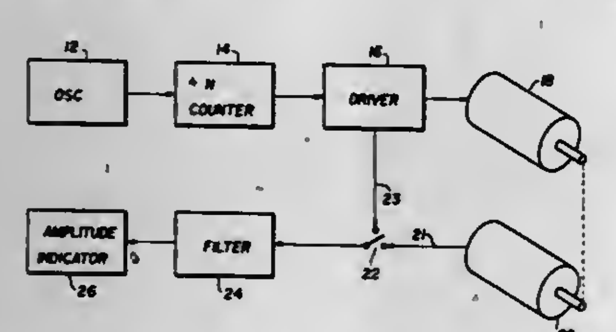

1. Method of adjusting a stepping motor driver for minimizing the effects of resonance comprising:
driving a filter with a variable frequency source via a motor driver;
measuring the frequency response of the filter;
varying the frequency of the source until a maximum measurement is achieved;
driving a stepping motor with said driver and source at the adjusted frequency;
measuring the response of said motor through said filter; and
adjusting the driver of said motor until a minimum measurement is achieved.

4,302,713
FIXED GATING SEQUENCE APPARATUS AND METHOD FOR AN INVERTER
John H. Cutler, Roanoke, and Loren H. Walker, Salem, both of Va., assignors to General Electric Company, Salem, Va.
Filed Apr. 24, 1979, Ser. No. 32,894
Int. Cl.³ H02M *1/18*
U.S. Cl. 318—801 15 Claims

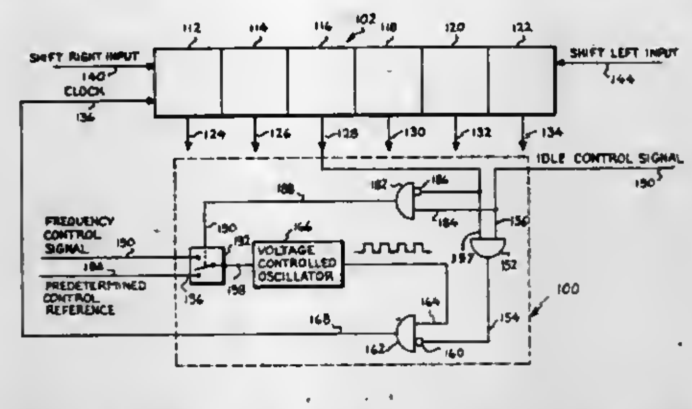

1. In an inverter system of the type that provides gating signals in a prescribed sequence in response to a selectively applied clocking signal to thereby control the application of electrical power to an associated electric motor, the improvement comprising:
(a) means for supplying an externally generated idle control signal when a zero speed, zero torque mode of motor operation is desired;
(b) means for providing gating signals in response to a clocking signal;
(c) generating means for generating said clocking signal at a controllable rate in response to an externally supplied controllable voltage signal; and at a predetermined rate in response to an externally supplied voltage signal of a predetermined magnitude;
(d) means for providing said gating signals to said system in response to a one of said gating signals and said idle control signal including,
(1) first logic means for providing a first control signal except in response to said one of said gating signals and said idle control signal, and
(2) second logic means for providing said clocking signal to said inverter system except in the absence of said first control signal; and,
(e) third logic means for providing said voltage signal of a predetermined magnitude to said generating means in response to said idle control signal and in the absence of said one of said gating signals.

4,302,714
RECHARGEABLE BATTERY CHARGER SYSTEM FOR CHARGING TESTING, REJUVENATION AND PREVENTATIVE MAINTENANCE
Sheldon A. Yefsky, 5033 W. Morse, Skokie, Ill. 60077
Filed Apr. 27, 1979, Ser. No. 33,818
Int. Cl.³ H02J *7/00;* G08B *21/00*
U.S. Cl. 320—5 5 Claims

1. A method for automatically rejuvenating and maintaining rechargeable batteries at maximum capacity, said method comprising the steps of:
detecting the presence of the battery;
initially discharging the battery to a selected value of deep discharge, said selected value being above the level of cell reversal;
initially recharging the battery to its rated capacity;
subsequently discharging the battery at a controlled rate and measuring the battery output voltage, and determining whether the output voltage is above a selected minimum voltage for a selected discharge period;
if the battery fails to meet the selected minimum voltage for the selected discharge period, continuing to recharge and redischarge the battery until the battery meets the selected minimum voltage for the selected discharge period or for a selected number of cycles to rejuvenate the battery by removing any reversible memory effects;

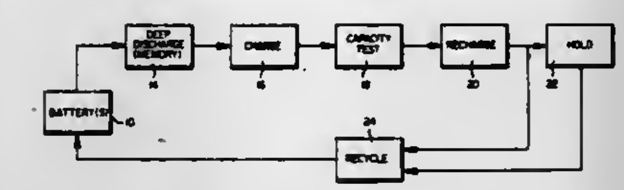

if, after the selected number of recharge and redischarge cycles, the battery voltage continues to fall below the selected minimum voltage for the selected discharge period, discarding the battery as having irreversible memory effects;
if the battery is not discarded, further recharging the battery to its full rated capacity;
maintaining such full rated capacity by trickle charging; and
periodically repeating such steps of discharging to deep discharge and recharging to full rated capacity to avoid onset of battery memory caused by prolonged charging.

4,302,715
DYNAMIC PARALLEL INDUCTIVE STABILIZER FOR SYNCHRONOUS MACHINES HAVING TORSIONAL OSCILLATIONS
Thomas H. Putman, Penn Hills, and Donald G. Ramey, Churchill Borough, both of Pa., assignors to Westinghouse Electric Corp., Pittsburgh, Pa.
Filed Jun. 15, 1979, Ser. No. 48,934
Int. Cl.³ H02J *3/16;* H02P *9/00*
U.S. Cl. 323—210 14 Claims

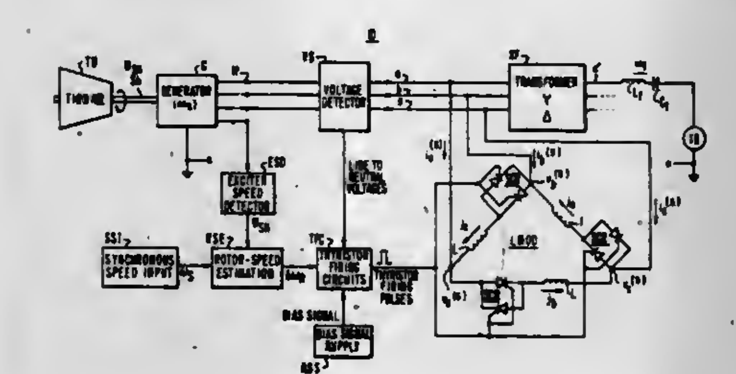

1. A compensator for an electrical generating system of the kind which generates an electrical voltage of a nominal frequency (ω_s) for an electrical circuit which has an electrical resonance at an electrical resonant frequency (ω_r), where the electrical generating system has a mechanical motion resonance at a mechanical resonant frequency (ω_m), where a mechanical motion at said mechanical motion resonant frequency (ω_m) will modulate said electrical voltage of said nominal frequency (ω_s) to produce a difference frequency electrical current in said circuit, the difference frequency (ω_D) being equal to the difference between said nominal frequency (ω_s) and said mechanical motion resonance frequency (ω_m), said difference frequency (ω_D) when equal to said electrical resonant frequency (ω_r) of said circuit being such that interaction between said difference frequency current and said mechanical motion resonance tends to increase the effect of the mechanical motion, comprising:
(a) mechanical motion detecting means interconnected with said generating system for determining a characteristic of said mechanical motion and for an oscillation providing an output signal related thereto; and
(b) modulatable impedance means interconnected in circuit relationship with said electrical circuit in such a manner that a carrier current for said electrical system which is generally at said nominal frequency (ω_s) is produced, said mechanical motion detecting means being interconnected with said impedance means in such a manner that said carrier current is modulated by said output signal to thus provide a side band current which has a frequency (ω_{sB}) generally equal to said difference frequency, said side band current thus causing a component of compensating current to flow in said electrical circuit in opposition to said difference frequency current in said circuit to thus compensate for the effects thereof to reduce said tendency to increase said mechanical motion.

4,302,716
CONTROLLABLE PHASE SHIFTER
Hans Glavitsch, Nussbaumen, and Gerhard Güth, Baden, both of Switzerland, assignors to BBC Brown, Boveri & Company Limited, Baden, Switzerland
Filed Nov. 8, 1979, Ser. No. 92,348
Claims priority, application Switzerland, Nov. 26, 1978, 12049/78
Int. Cl.³ H03K *3/352*
U.S. Cl. 323—217 10 Claims

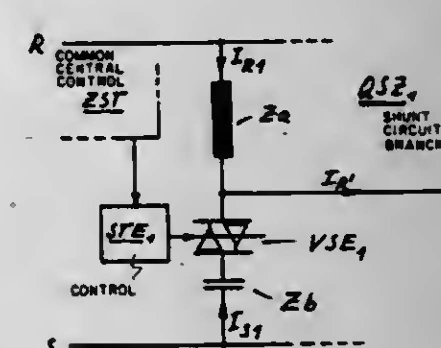

1. A controllable phase shifter for an alternating current-transmission system, especially for a power line network, comprising:
a shunt circuit branch arranged between at least two primary side terminals of the transmission system which carry voltages which are phase shifted with respect to one another;
said shunt circuit branch containing at least two series connected reactive impedances which are complementary to one another and a tap arranged between said impedances and serving as a secondary side terminal and at least one valve switching device;
said valve switching device being arranged in series with respect to one of the reactive impedances at least at one side of the tap of the shunt circuit branch; and
a control device provided for the valve switching device for selectively setting at least any one of different cut-off or cut-on intervals, or both, of the valve switching device.

4,302,717

POWER SUPPLY WITH INCREASED DYNAMIC RANGE

Robert S. Olla, Livermore, Calif., assignor to Fairchild Camera and Instrument Corp., Mountain View, Calif.

Filed Feb. 4, 1980, Ser. No. 118,168

Int. Cl.³ G05F ***1/44***

U.S. Cl. 323—282 **17 Claims**

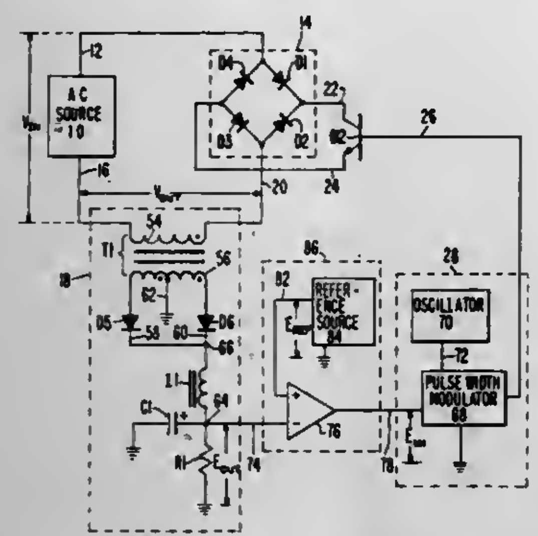

1. A power supply circuit for converting an alternating current at an input frequency into an output signal at an output voltage/current level different from the input voltage/current level of the alternating current, a voltage/current source supplying the alternating current which alternately switches flow between a pair of current-flow directions opposite to each other, the circuit comprising:

means responsive to a feedback signal for generating a first signal at a first frequency at least one order of magnitude greater than the input frequency;

a switching transistor which alternately switches on and off at the first frequency in response to the first signal, the transistor having a pair of current-flow electrodes;

means for directing the alternating current in a single current-flow direction through the current-flow electrodes when the transistor is on and for directing current flowing through the current-flow electrodes back to its original current-flow direction of the pair of current-flow directions, the means for directing substantially not directing current to the current-flow electrodes when the transistor is off, the first signal thereby being impressed on the alternating current to define a second signal;

means, serially coupled between the voltage/current source and the means for directing, for rectifying the second signal and for averaging it with respect to time to produce the output signal therefrom; and

feedback means responsive to the output signal for producing the feedback signal to provide feedback regulation of the output signal.

4,302,718

REFERENCE POTENTIAL GENERATING CIRCUITS

Otto H. Schade, Jr., North Caldwell, N.J., assignor to RCA Corporation, New York, N.Y.

Filed May 27, 1980, Ser. No. 153,628

Int. Cl.³ G05F ***3/16***

U.S. Cl. 323—313 **22 Claims**

1. A potential generating circuit of a type comprising:

first and second transistors of like conductivity type, each having collector, base and emitter electrodes, each having a base-emitter junction, and each having a collector-emitter conduction path, which emitter electrodes respectively connect together at a first node;

a first resistance with a first end to which the base electrode of said first transistor and the collector electrode of said second transistor connect, and with a second end;

a second node to which the base electrode of said second transistor and the second end of said first resistance connects;

a regenerative current feedback connection from the collector electrode of said first transistor to said second node;

a second resistance in predetermined proportion with said first resistance, and having first and second ends;

means arranging said second resistance in series connection with the collector-emitter conduction path of said second transistor, so the current flowing through the collector-emitter conduction path of said second transistor flows

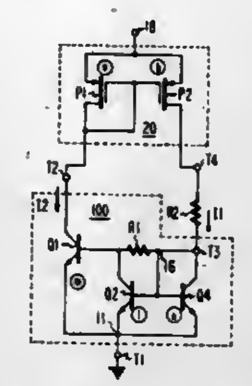

through said second resistance to cause a potential drop thereacross for generating an output potential across said series connection;

improved by further comprising:

means for generating a current proportionally related to the current in the collector-emitter conduction path of said second transistor; and

means applying said proportionally related current to said second resistance for proportionally increasing the potential drop thereacross.

4,302,719

CIRCUIT FOR CONTROLLING A CURRENT SOURCE TRANSISTOR

Johann Mattfeld, Unterheinriet, Fed. Rep. of Germany, assignor to Licentia patent-Verwaltungs-G.m.b.H., Frankfurt am Main, Fed. Rep. of Germany

Filed Mar. 21, 1980, Ser. No. 132,528

Claims priority, application Fed. Rep. of Germany, Mar. 22, 1979, 2911171

Int. Cl.³ G05F ***3/20***

U.S. Cl. 323—316 **8 Claims**

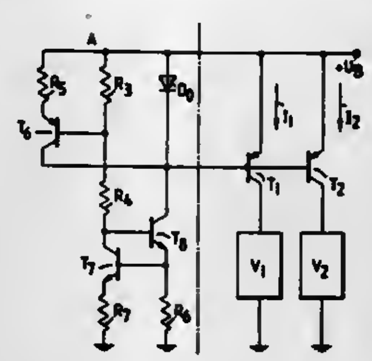

1. A circuit for controlling a current source transistor as a function of a d.c. supply voltage for the transistor, comprising: a further current source connected to receive the d.c. supply voltage; a component connected to said further current source to be supplied with current by said further source, and connected to said current source transistor in a manner such that the voltage across said component constitutes the control voltage for said transistor; and a resistor which is controllable in dependence on the supply voltage connected in parallel with said component for stabilizing the current provided by said current source transistor upon variations in the supply voltage.

4,302,720

GALVANOMETER-TYPE MOTOR

Henry L. Brill, Flushing, N.Y., assignor to Bulova Watch Company, Flushing, N.Y.

Filed Apr. 20, 1979, Ser. No. 31,997

Int. Cl.³ G01R ***1/20***

U.S. Cl. 324—146 **7 Claims**

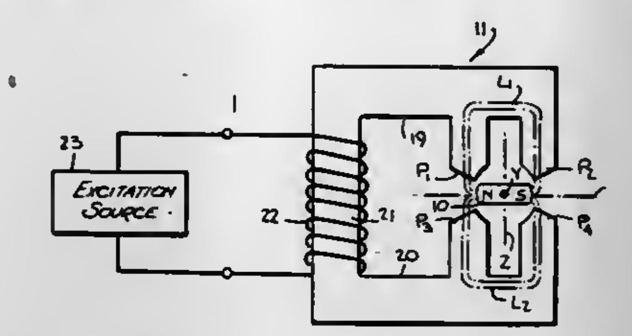

1. A galvanometer-type motor for driving an optical element to deflect or otherwise modulate a radiant energy form, the motor having a favorable mass-to-torque ratio and comprising:

A a permanent magnetic rotor supported for rotation on an axis of rotation, said rotor being a bar magnet having North and South end poles;

B a stator of soft magnetic material having first and second split pole pieces extending respectively from first and second arms joined by a bridge forming the core of a field coil, the first and second split pole pieces being disposed on opposite sides of the bar magnet whose axis of rotation is centered with respect thereto; whereby when current in a given direction is supplied to said field coil, the split pole piece on the first arm is polarized North and the split pole piece on the second arm is polarized South;

C means to return said rotor to a neutral position in which the split poles of each piece straddle the end poles of the rotor on the related side thereof; and

D means supplying current to the field coil to cause the rotor to move accordingly.

4,302,721

NON-CONTACTING RESISTIVITY INSTRUMENT WITH STRUCTURALLY RELATED CONDUCTANCE AND DISTANCE MEASURING TRANSDUCERS

Karel Urbanek, Atherton; George J. Kren, Los Altos, and William R. Wheeler, Saratoga, all of Calif., assignors to Tencor Instruments, Mountain View, Calif.

Continuation-in-part of Ser. No. 903,493, May 8, 1978, Pat. No. 4,175,441, and a continuation-in-part of Ser. No. 941,233, Sep. 11, 1978, abandoned. This application May 15, 1979, Ser. No. 39,303

Int. Cl.³ G01N ***27/72;*** **G01R** ***33/12***

U.S. Cl. 324—226 **29 Claims**

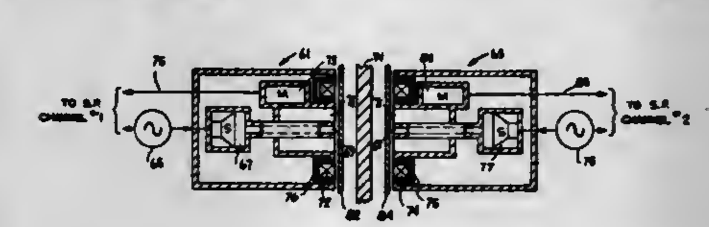

1. A non-contacting resistivity gauge for magnetically susceptible sheet material comprising,

first and second gauge heads mutually spaced a distance relative to the opposite sides of a magnetically susceptible sheet material whose resistivity is to be measured, each gauge head having acoustic pressure means including a speaker and a microphone disposed in the portion of the gauge head facing the sheet material and having an acoustic pressure communication zone therebetween for producing a first electrical signal, the first electrical signals from the first and second gauge heads electrically combined to be representative of the thickness of said sheet material, each gauge head further having solenoid means generating an axial magnetic field zone which is generally perpendicular to said sheet material and in magnetic induction relation therewith for producing a second electrical signal, the second electrical signals from the first and second gauge heads electrically combined to be representative of the conductance of said sheet material, said solenoid means surrounding at least a portion of said acoustic pressure means, with said acoustic pressure communication zone coinciding with the axial magnetic field zone, such that the areas over which said conductivity and thickness measurements are made are the same, and

electrical circuit means for combining said first and second electrical signals yielding a third electrical signal representative of resistivity of said sheet material.

4,302,722

INDUCTION LOGGING UTILIZING RESISTIVE AND REACTIVE INDUCED SIGNAL COMPONENTS TO DETERMINE CONDUCTIVITY AND COEFFICIENT OF ANISOTROPY

Stanley Gianzero, Ridgefield, Conn., assignor to Schlumberger Technology Corporation, New York, N.Y.

Filed Jun. 15, 1979, Ser. No. 48,876

Int. Cl.³ G01V ***3/28***

U.S. Cl. 324—339 **27 Claims**

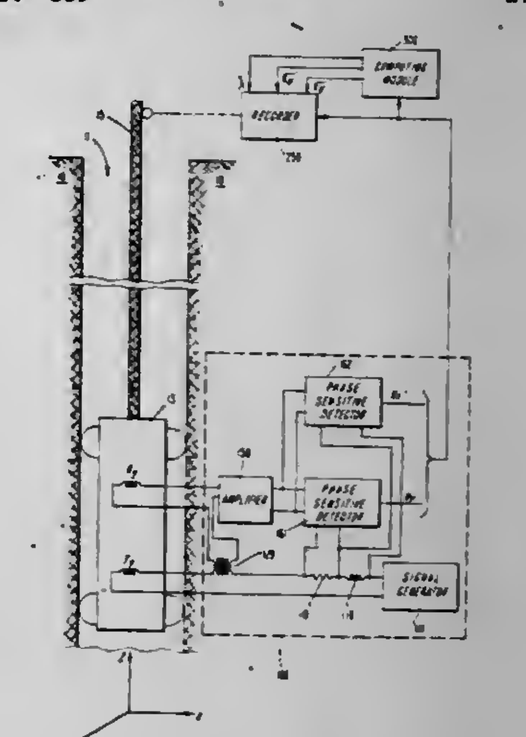

1. Apparatus for determining the vertical conductivity of formations surrounding a borehole, comprising:

a transmitter coil having an axis substantially perpendicular to the borehole axis;

a receiver coil spaced from said transmitter coil and having an axis which is substantially parallel to the axis of said transmitter coil;

means for energizing said transmitter coil;

means for detecting the resistive and reactive components of the signals induced in said receiver coil; and

means responsive to the detected components for obtaining a measure of the vertical conductivity of said formations.

4,302,723

APPARATUS AND METHOD FOR DETERMINING DIP AND/OR ANISOTROPY OF FORMATIONS SURROUNDING A BOREHOLE

James H. Moran, Spicewood, Tex., assignor to Schlumberger Technology Corporation, New York, N.Y.

Filed Jun. 15, 1979, Ser. No. 48,877

Int. Cl.³ G01V *3/28*

U.S. Cl. 324—343 30 Claims

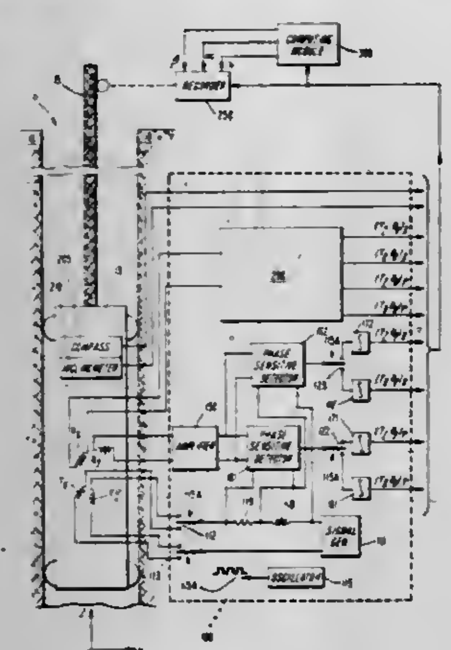

1. Well logging apparatus for determining dip and/or anisotropy parameters of formations surrounding a borehole, comprising:

a support member adapted for movement through the borehole;

a transmitter including a first transmitter coil having an axis which is substantially parallel to the borehole axis and a second transmitter coil having an axis which is substantially perpendicular to the borehole axis;

a receiver including first and second receiver coils having substantially mutually orthogonal axes which are both substantially perpendicular to the borehole axis;

said transmitter and receiver being mounted in a mechanically passive manner on said support member;

means for energizing the first transmitter coil;

means for detecting signals induced in each of said receiver coils as a result of energizing said first transmitter coil;

means for energizing the second transmitter coil;

means for detecting signals induced in at least one of said receiver coils as a result of energizing said second transmitter coil; and

means for combining the detected signals to obtain indications of the formation dip and/or anisotropy parameters.

4,302,724

PICKUP PROBE FOR ENGINE TIMING

Donald D. Grover, and Norbert C. Neumann, both of Kenosha, Wis., assignors to Snap-on Tools Corporation, Kenosha, Wis.

Filed Jul. 30, 1979, Ser. No. 62,111

Int. Cl.³ G01R *1/04;* H01F *7/20*

U.S. Cl. 324—402 9 Claims

1. A pickup probe for engine timing adapted to extend through an access opening in an engine member into proximity with a projecting indicator on a rotating engine part comprising:

a tubular member having a free end, the periphery thereof having an annular chamfer providing a tapered cam surface which may engage without damage the projecting indicator and cooperate in adjusting the probe to establish an effective air gap;

a sensor mounted within said tubular member in recessed relation with the free end thereof, said sensor being responsive to the indicator when spaced therefrom by an effective air gap;

mounting means on said tubular member adapted to be detachably secured to the engine member with said tubular member extending through the access opening;

cooperating first means on said tubular member and said mounting means permitting limited longitudinal adjusting movement of said member with respect to said mounting means which enables said tubular member to be moved to a selected position establishing an effective air gap; and

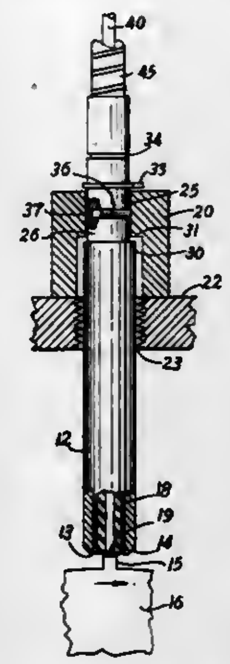

cooperating second means in effective relation with said tubular member and said mounting means enabling said tubular member to maintain said selected position;

whereby said tubular member may be positioned without damage in effective relation with the indicator on the rotating engine part despite dimensional irregularities in the engine and said sensor will be spaced from the indicator by the effective air gap.

4,302,725

METHOD FOR TESTING PANEL-TO-FUNNEL SEALING LAYER OF A CATHODE-RAY TUBE

Jawdat I. Nubani, Clarks Summit, Pa., assignor to RCA Corporation, New York, N.Y.

Filed Mar. 28, 1980, Ser. No. 135,174

Int. Cl.³ G01R *31/22*

U.S. Cl. 324—404 10 Claims

1. In the manufacture of a cathode-ray tube of the type comprising (i) an evacuated envelope including an electrically-insulating glass faceplate panel having an integral peripheral sidewall and an electrically-insulating funnel hermetically sealed to said sidewall with a sealing layer of an electrically-insulating substance, (ii) an electrically-conducting coating on the internal surface of said funnel, and (iii) an electrically-conducting metal structure around the outside of said sidewall, a method for testing said sealing layer comprising, prior to connecting said tube with its ultimate circuitry for functional use, wherein a high operating DC voltage is applied to said internal funnel coating, the step of applying a high testing DC voltage between said metal structure and said internal funnel coating, said testing DC voltage being substantially higher than said operating DC voltage, whereby, if said sealing layer has insufficient resistance to electrical breakdown, said sealing layer is

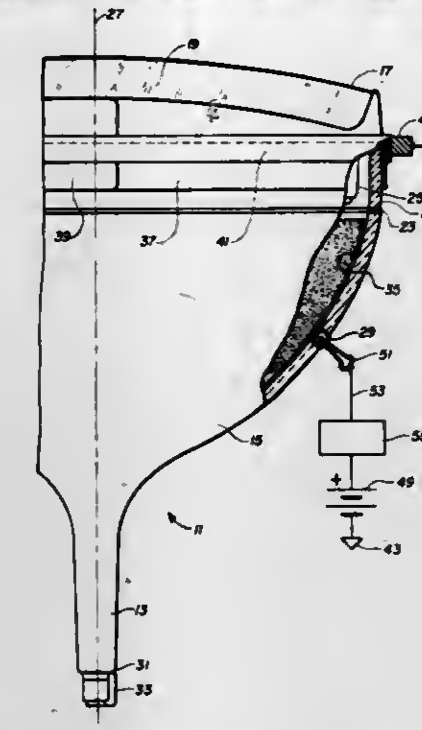

punctured by a leakage current and said envelope is devacuated through said puncture.

4,302,726

CURRENT SOURCES

David E. Shobbrook, Greenford, England, assignor to The General Electric Company Limited, London, England

PCT No. PCT/GB78/00041, § 371 Date Jul. 16, 1979, § 102(e) Date Jul. 10, 1979, PCT Pub. No. WO79/00295, PCT Pub. Date May 31, 1979

PCT Filed Nov. 14, 1978, Ser. No. 117,496

Int. Cl.³ H03F *3/45, 1/34*

U.S. Cl. 330—260 8 Claims

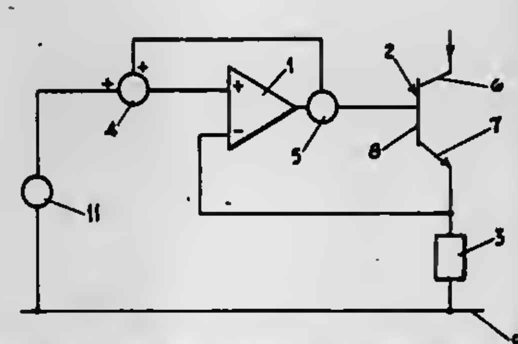

1. A current source arrangement in which the magnitude of current flowing in an output path of a transistor amplifier stage is arranged to be controlled by an input signal applied to an input of the arrangement, said input signal being applied to the transistor amplifier stage by way of a differential amplifier, comprising means to derive a negative feedback signal whose magnitude is dependent upon that of said current in said output path, means to apply said negative feedback signal to an input of said differential amplifier, means to derive a further feedback signal whose magnitude is dependent upon the value of input current to said transistor amplifier stage, and means to apply said further feedback signal as a positive feedback signal to an input of said differential amplifier whereby to reduce the dependence of the current flowing in said output path on the gain of the transistor amplifier stage.

4,302,727

POWER AMPLIFIER HAVING BIAS CIRCUIT WITH TEMPERATURE COMPENSATION

Masayuki Iwamatsu, Shizuoka, Japan, assignor to Nippon Gakki Seizo Kabushiki Kaisha, Hamamatsu, Japan

Filed Nov. 5, 1979, Ser. No. 91,485

Claims priority, application Japan, Nov. 16, 1978, 53-141487

Int. Cl.³ H03F *3/26*

U.S. Cl. 330—266 10 Claims

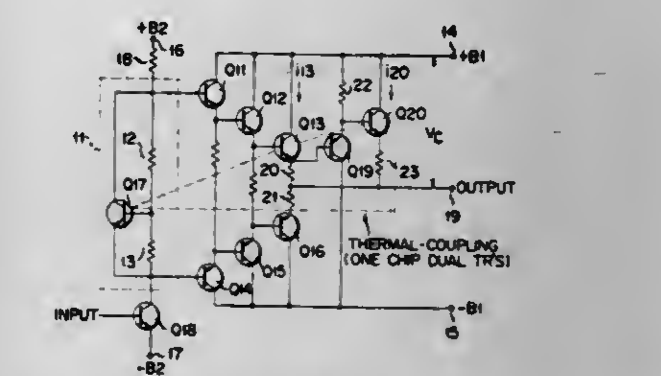

1. A power amplifier comprising:

complementary power transistors connected between power supply terminals;

detection circuit means coupled to said complementary power transistors for detecting a collector power dissipation of one of said complementary power transistors, said detection circuit means including a transistor which is heated by detection of said collector power dissipation of said one of said power transistors; and

bias circuit means coupled to said complementary power transistors for flowing a substantially constant bias current through said complementary power transistors, said bias circuit means including a temperature compensation transistor which is thermally coupled with said transistor of said detection circuit means.

4,302,728

ULTRASONIC WAVE OSCILLATOR CIRCUIT WITH OUTPUT METER

Masahiro Nakamura, Tokyo, Japan, assignor to Ohtake Works Company, Ltd., Tokyo, Japan

Filed Oct. 3, 1979, Ser. No. 81,589

Claims priority, application Japan, Dec. 28, 1978, 53-161067

Int. Cl.³ H03B *5/38;* H03L *7/08*

U.S. Cl. 331—25 6 Claims

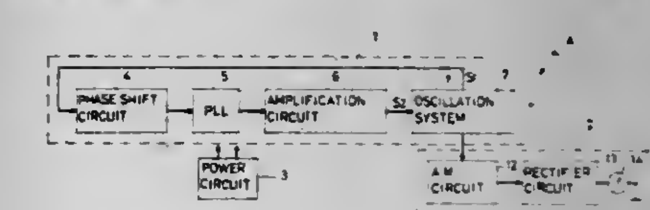

5. An ultrasonic wave oscillator comprising an oscillation system including a vibrator, an input transformer having a secondary winding, a first output resistance means connected in series with said vibrator and said secondary winding, and second resistance means connected in parallel with said vibrator, said oscillator further comprising a phase shift circuit, means applying the voltage across said first resistance means to said phase shift circuit, a phase locked loop for receiving the output of said phase shift circuit and for producing an output oscillation corresponding to the difference between the output of said phase shift circuit and voltage controlled oscillation generated therein, and means for amplifying the output of said phase locked loop for application to the primary winding of said transformer.

4,302,729
CHANNELED SUBSTRATE LASER WITH DISTRIBUTED FEEDBACK
Robert D. Burnham, Los Altos Hills; Donald R. Scifres, Los Altos, and William Streifer, Palo Alto, all of Calif., assignors to Xerox Corporation, Stamford, Conn.
Filed May 15, 1979, Ser. No. 39,424
Int. Cl.³ H01S *3/19*
U.S. Cl. 331—94.5 H **1 Claim**

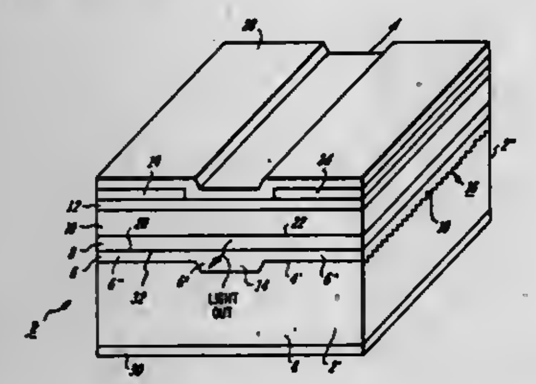

1. A solid state laser with mode control comprising:
a semiconductor material substrate having a surface with a channel formed therein between plateau portions, said channel extending in a first direction;
a periodic structure having sections formed only on said plateau portions, said periodic structure having peaks extending in a direction substantially transverse to said first direction;
a non-uniformly thick cladding layer supported by said substrate and filling said channel and covering the sections of said periodic structure;
a plurality of tandomly disposed semiconductor material layers supported by said cladding layer, one of said plurality of layers being an active region layer of substantially uniform composition;
said plurality of layers being doped to provide a rectifying junction adjacent said active region layer; and
electrode means for the application of forward bias to said rectifying junction to provide pump current to said active region layer for the production, upon sufficient forward bias, of radiant energy; and
said radiant energy interacting with said periodic structure and said cladding layer to provide mode controlled laser emission.

4,302,730
CAVITY DUMPER
James L. Jernigan, Ridgecrest, Calif., assignor to The United States of America as represented by the Secretary of the Navy, Washington, D.C.
Filed Jun. 4, 1979, Ser. No. 45,375
Int. Cl.³ H01S *3/08*
U.S. Cl. 331—94.5 C **10 Claims**

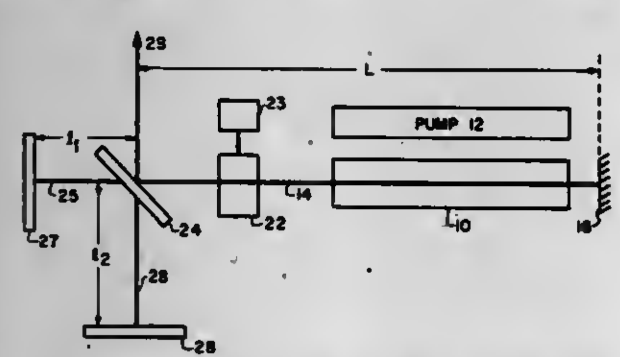

1. A cavity dumper for a laser resonant cavity comprising:
lasing material for emitting a range of light wavelengths or modes along a main optical path of length L with two ends, said lasing material located between said ends;
means in proximity to said lasing material for pumping said lasing material to an excited state where said light emission will occur;
a total reflecting surface placed in said main optical path at one end of said laser resonant cavity for establishing a closed end to said main optical path;
a Fox interferometer placed in said main optical path for operating a selective emission second end to said laser resonant cavity, said interferometer has two interferometric legs of length l_1, and l_2 at the second end of said main optical path such that two resonating paths of length, $L+l_1$, and l_1+l_2, exist, said resonating paths determinative of which wavelengths are emitted by said selective end of the resonant cavity and which wavelengths are contained along said resonating paths;
a variable voltage source electrically connected to said electro-optic cell for changing the path length of at least one of said two resonating paths as the voltage is varied in a predetermined manner; and
an electro-optic cell placed in said paths of length L, l_1, or l_2 in a predetermined manner, said variation changing the wavelengths emitted by said selective emission end of said laser resonant cavity and the wavelengths contained by the new combination of resonating paths.

4,302,731
TEMPERATURE-COMPENSATED CRYSTAL OSCILLATOR
Shigeaki Ashida, Tokyo, Japan, assignor to Nippon Electric Co., Ltd., Tokyo, Japan
Filed Nov. 27, 1979, Ser. No. 97,649
Claims priority, application Japan, Nov. 30, 1978, 53-148324
Int. Cl.³ H03B *5/04;* **B03B** *5/36*
U.S. Cl. 331—116 R **9 Claims**

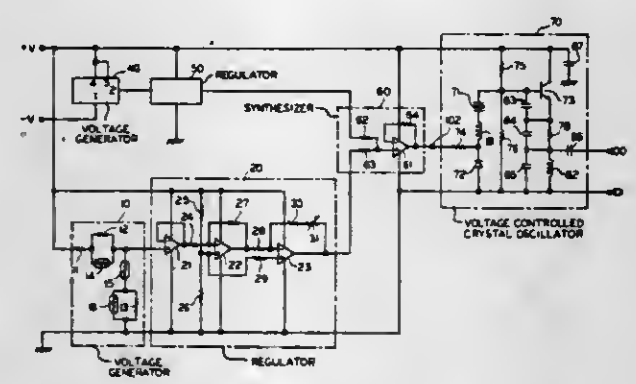

2. A voltage controlled and temperature compensated crystal oscillator comprising means for generating a first voltage having a characteristic which varies in proportion to temperature caused variations in the output of said oscillator, means for generating a second voltage which has a slope corresponding to the temperature-frequency slope of a crystal type which is used in said oscillator, means coupled to said first voltage generating means for converting said first voltage into a third voltage having a variable gain, means coupled to said second voltage generating means for converting said second voltage into a fourth voltage having a variable gain, means for adding said third and fourth voltages to derive a control voltage, and means for applying said derived control voltage to control said oscillator in a manner which compensates for variations in said characteristic responsive to temperature changes.

4,302,732
HARMONIC PHASE LOCKED LOOP WITH UNDESIRED DC COMPONENT SUPPRESSION
Robert K. Moulton, North Wales, and John W. Thompson, Willow Grove, both of Pa., assignors to Sperry Corporation, New York, N.Y.
Filed Jul. 9, 1979, Ser. No. 55,885
Int. Cl.³ H03L *1/00*
U.S. Cl. 331—176 **6 Claims**

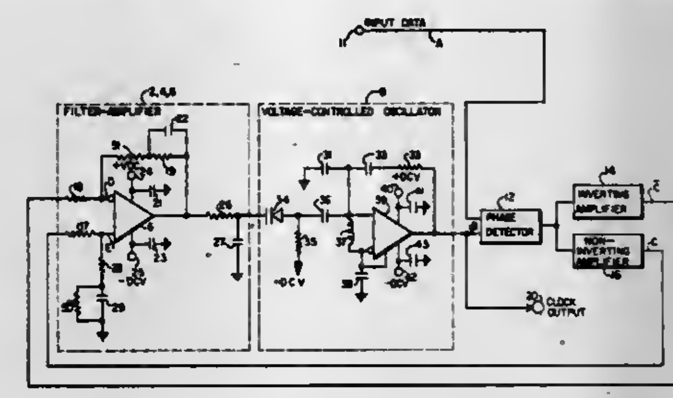

1. A phase-locked loop comprising:
voltage-controlled oscillator means for producing a clock output signal having a frequency in accordance with an applied error control voltage signal,
phase detector means coupled to said oscillator means for comparing said clock output signal with an incoming data signal and producing a first signal having an average voltage amplitude proportional to the phase difference between the clock output signal and the incoming data signal,
first amplifying means coupled to said phase detector means for amplifying without inverting said first signal, second amplifying means also coupled to said phase detector means in parallel with said first amplifying means for amplifying and inverting said first signal,
first filter means coupled to said first amplifying means for producing a first low-frequency signal by extracting the low-frequency components from said non-inverted amplified first signal,
second filter means coupled to said second amplifying means for producing a second low-frequency signal by extracting the low-frequency components from said inverted, amplified first signal, and
combining means coupled to said first and second filter means for differentially combining said low-frequency signals to produce said applied error control voltage signal having an amplitude which is substantially equal to the sum of the voltage amplitudes of said first and second low-frequency signals and any undesired D.C. voltage components present in the low-frequency signals have been mutually cancelled out.

4,302,733
MICROWAVE HYBRID COUPLERS
Edward Salzberg, 19 Black Oak Rd., Wayland, Mass. 01778
Filed Feb. 25, 1980, Ser. No. 124,619
Int. Cl.³ H01P *1/15, 5/20*
U.S. Cl. 333—101 **13 Claims**

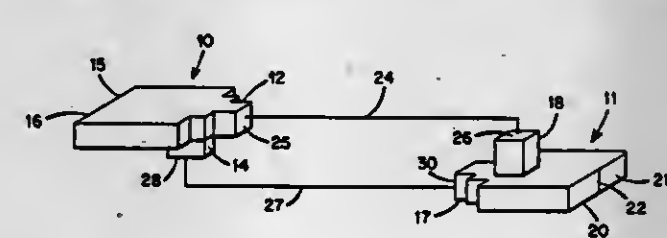

1. A microwave hybrid tee transfer switch using magic tee hybrid couplers comprising:
(a) a first hybrid tee having two symmetrical arms terminating in first and second output ports, an E-plane arm and an H-plane arm;
(b) a second hybrid tee having two symmetrical arms terminating in first and second input ports, an E-plane arm and an H-plane arm;
(c) a variable phase shifter connected between the E-plane arm of one of said first hybrid tee and said second hybrid tee and the H-plane arm of the other; and
(d) a phase shifting device connected between the H-plane arm of said one and the E-plane arm of said other, whereby microwave power fed to one of said input ports can be fed to one of said output ports and switched between said output ports by varying said variable phase shifter.

4,302,734
MICROWAVE SWITCHING POWER DIVIDER
Robert A. Frosch, Administrator of the National Aeronautics and Space Administration, with respect to an invention of; Ronald J. Stockton, Nederland, and Russell W. Johnson, Boulder, both of Colo.
Filed Mar. 12, 1980, Ser. No. 129,793
Int. Cl.³ H01P *1/15*
U.S. Cl. 333—104 **14 Claims**

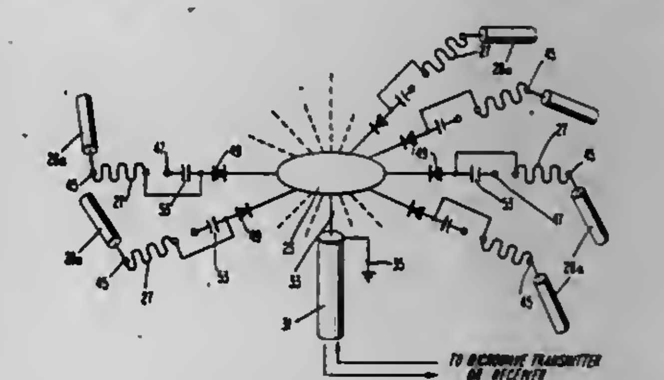

1. A microwave switching, power divider for selectively dividing and switching microwave energy at wavelength λ among a plurality of outputs, comprising:
first and second parallel ground planes joined together by a short circuiting wall along a transverse plane radially interior of the outer perimeter of the ground planes and defining a discoid microwave cavity having an axial height substantially less than λ and an interior radius of less than λ;
a dielectric substrate disposed parallel to and spaced apart between said first and second ground planes within said cavity, said dielectric substrate including microwave power distribution and switching circuits, said circuits comprising:
a central microwave power distribution element disposed about the center of said substrate and connectable to a source of microwave power;
a plurality of power dividing transmission lines lying wholly within said cavity connected to and radially disposed about said distribution element;
an equal plurality of output ports spaced substantially less than λ inward from said short circuiting wall, a different one of said ports disposed radially outward from and adjacent each of said radial transmission lines; and
switching means interposed between the outermost extremity of each said transmission line and each said output port for selectively controlling the coupling between the entireties of one or more of said transmission lines and said output ports.

4,302,735
DELAY LINE COMPENSATION NETWORK
Chester M. Nibby, Jr., Peabody, and Robert B. Johnson, Billerica, both of Mass., assignors to Honeywell Information Systems Inc., Waltham, Mass.
Filed May 7, 1979, Ser. No. 36,632
Int. Cl.³ H03H *7/21, 7/32*
U.S. Cl. 333—138 **20 Claims**

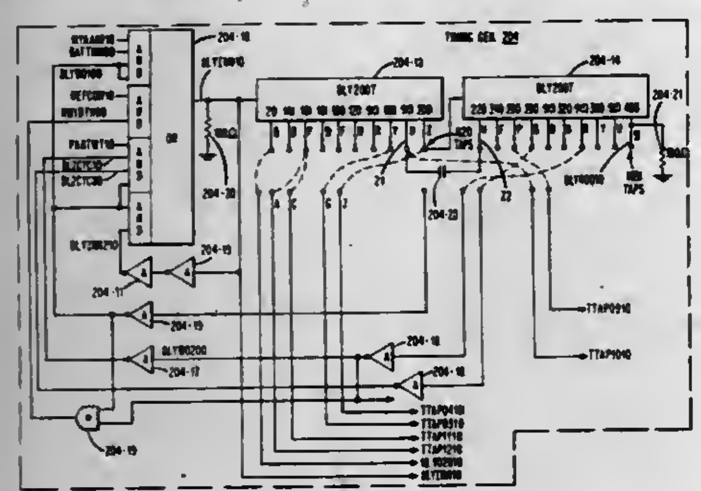

1. A timing generator circuit for generating a sequence of output timing pulses in response to input timing pulses, said circuit comprising:
a first multisection delay line having an input terminal for receiving said input timing pulses, a plurality of taps and an output tap;
a second multisection delay line having an input terminal directly coupled to said output tap of said first delay line and a plurality of taps and an output tap; and,
capacitive means having first and second terminals for connecting said capacitive means between predetermined taps connected to last and first sections of said first and second multisection delay lines forming a compensating network with the corresponding sections of said delay lines for cancelling voltage reflections produced by connecting said first and second delay lines in series.

4,302,736
ELECTRICAL COMPOSITE PART
Tohru Kasanami, Kyoto; Toshiaki Ikeda, Osaka; Tetsuya Murakawa, Fukui, and Toshimi Kaneko, Sabae, all of Japan, assignors to Murata Manufacturing Co., Ltd., Japan
Filed Oct. 12, 1979, Ser. No. 84,304
Claims priority, application Japan, Oct. 18, 1978, 53/143562[U]
Int. Cl.³ H03H *1/02, 7/01*
U.S. Cl. 333—172 **12 Claims**

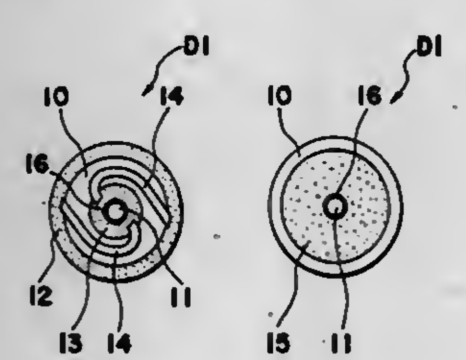

1. An electrical composite part for use in electrical and electronic equipment, comprising:
a generally cylindrical substrate of ceramic dielectric material having first and second opposed major surfaces and a through-opening formed at its central portion, said through-opening extending between said first and second major surfaces;
first and second electrodes provided on said first surface of said substrate and located adjacent to the outer periphery and around said through-opening, respectively;
a third electrode provided on said second surface of said substrate;
means for shortcircuiting said third electrode to one of said first or second electrodes;
resistor means connected between said first and second electrodes so as to extend over said first surface of said substrate in an indirect path between said first and second electrodes; and
an electrically insulating covering layer formed on said first surface of said substrate, the location of said resistor means being such that said electrically insulating covering layer is directly adjacent at least a portion of said first surface along all diameters of said cylindrical substrate.

4,302,737
RC NETWORK
Helmold Kausche, Munich, and Heinz Hebbeker, Steingaden, both of Fed. Rep. of Germany, assignors to Siemens Aktiengesellschaft, Berlin & Munich, Fed. Rep. of Germany
Filed Dec. 20, 1979, Ser. No. 105,946
Claims priority, application Fed. Rep. of Germany, Jan. 26, 1979, 2903025
Int. Cl.³ H03H *1/02, 3/00, 7/01*
U.S. Cl. 333—172 **9 Claims**

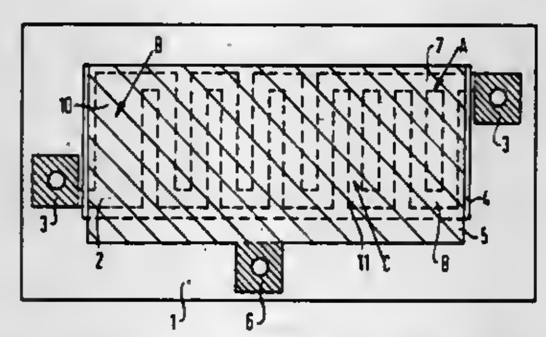

1. A distributed RC network, comprising: two electrically conducting regions and a dielectric between the conducting regions so as to form a capacitor; at least one of the electrically conducting regions comprising a resistance layer which has a meandering path shape and at least one closed loop connecting to the path; a carrier of heat-resistant material and the resistance layer being formed on the carrier; said dielectric comprising a glow discharge polymer over the resistance layer; the other electrical conducting region comprising an opposite electrode of a metal which can be oxidized in occurring regeneration processes being applied over the dielectric; and the dielectric and the opposite electrode completely covering the resistance layer except for contact areas; whereby an RC network is provided having a capacitance which is capable of regeneration.

4,302,738
NOISE REJECTION CIRCUITRY FOR A FREQUENCY DISCRIMINATOR
Richard C. Cabot, and Bruce E. Hofer, both of Beaverton, Oreg., assignors to Tektronix, Inc., Beaverton, Oreg.
Filed Apr. 11, 1980, Ser. No. 139,938
Int. Cl.³ H03H *7/02, 21/00*
U.S. Cl. 333—174 **8 Claims**

1. A frequency discriminating system comprising:
a tunable notch filter having an input terminal, an output terminal, and a control terminal for receiving and filtering an input signal;
subtracting means for receiving the output of said tunable notch filter and said input signal and subtracting one from the other; and
frequency discriminating means connected to receive the output of said subtracting means for producing output

amplitude variations in response to input frequency variations, said output amplitude variations being coupled to

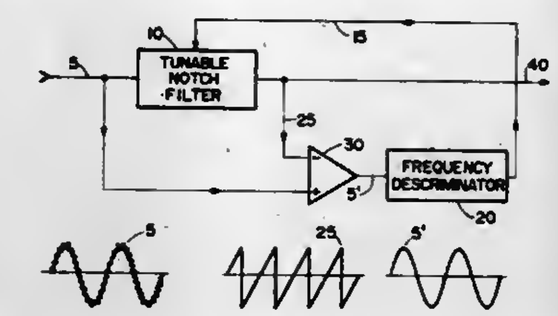

said control terminal of said tunable notch filter for tuning the notch frequency thereof.

4,302,739
BALUN FILTER APPARATUS
Ben R. Hallford, Wylie, Tex., assignor to Rockwell International Corporation, El Segundo, Calif.
Filed Oct. 12, 1979, Ser. No. 84,286
Int. Cl.³ H01P *1/203, 5/10*
U.S. Cl. 333—204 **10 Claims**

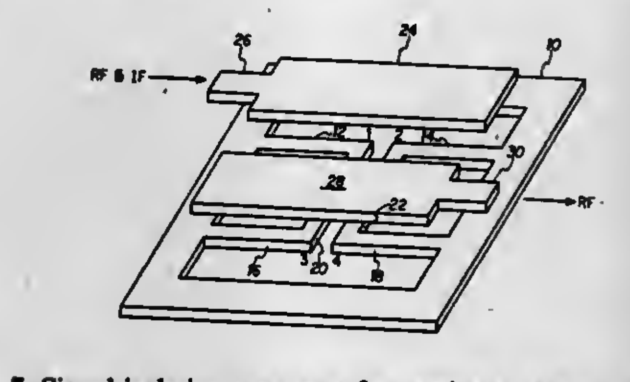

7. Signal isolation apparatus for passing a range of frequencies Δf with minimal attenuation while significantly attenuating signal frequencies outside said range comprising, in combination:
input signal first balun means including first and second signal transmission coupling means;
output signal second balun means, separate from said first balun means, including first and second signal transmission coupling means; and
means connecting said second signal transmission coupling means of said first balun means to said second signal transmission coupling means of said second balun means.

4,302,740
CIRCUIT BREAKER MECHANISM
Alfred E. Maier; Louis N. Ricci, both of Chippewa Township, Allegheny County, and Charles E. Haugh, Daughtry, all of Pa., assignors to Westinghouse Electric Corp., Pittsburgh, Pa.
Filed Dec. 10, 1979, Ser. No. 102,047
Int. Cl.³ H01H *73/02, 75/00, 77/00*
U.S. Cl. 335—21 **5 Claims**

1. A circuit interrupter comprising relatively movable contact structure and contact arm for moving the contacts between open and closed positions, operating means including an overcenter toggle and releasable arm operable to effect movement of the movable contact structure, lever means operatively connected to the overcenter toggle for moving the operating means between open and closed positions, the releasable arm being movable from a latched position to effect opening of the contacts, latch means for releasably holding the releasable arm in the latched position, the overcenter toggle comprising first link pivotally connected to the contact arm and a second link pivotally connected to the releasable arm, a knee pivot pivotally connecting the first and second links, toggle latch means proximate to the knee pivot for latching the overcenter toggle in a partially closed position of the contacts, means connected to the toggle latch means for releasing the toggle latch means to effect closing of the contacts, handle latch means adjacent to the lever means for holding the lever

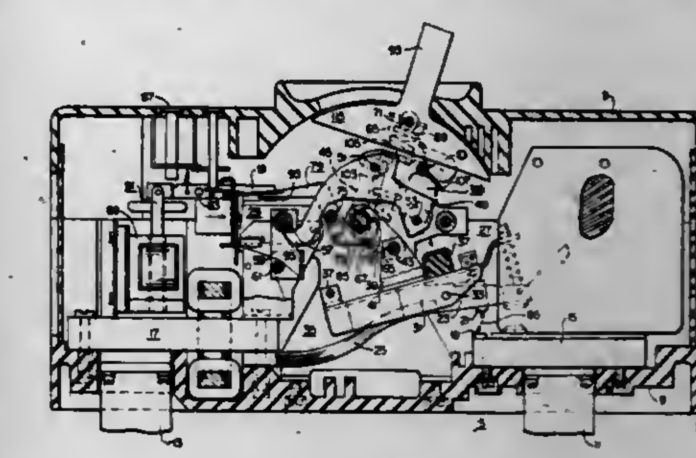

means in the closed position, and means couple with the toggle latch means for releasing the handle latch means.

4,302,741
OIL FILLED SWITCH MECHANISM AND USES THEREFORE
Jack L. Warren, Reno, Nev., assignor to Suzi Light Corporation, Sparks, Nev.
Filed Apr. 4, 1979, Ser. No. 26,597
Int. Cl.³ H01H *67/12*
U.S. Cl. 335—131 **8 Claims**

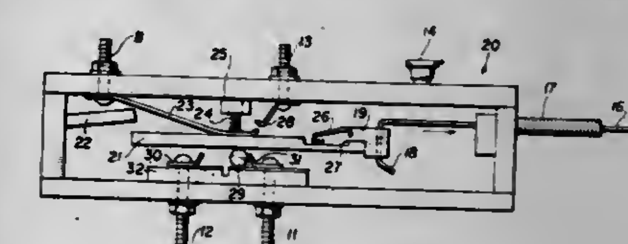

1. A switching mechanism comprising in combination a closed reservoir, oil disposed in said reservoir, a contact bar medially disposed within said reservoir in a horizontal sense, a first pair of contact elements disposed on the top of said contact bar and separated from each other and a second pair of contact elements disposed below said contact bar and similarly separated, a ball having conductive properties disposed between said second pair of contact elements and adapted to connect one of said second pair of contact elements with said contact bar, and a fifth contact element disposed on said contact bar on an upper face thereof whereby when said fifth contact element on said contact bar bridges said first pair of contact elements, said second pair of contact elements are disengaged and when said fifth contact element does not bridge said first pair of contact elements, a connection is made between one of said first pair of contact elements and one of said second pair through a conductive portion of said contact bar and said ball.

4,302,742
ELECTROMAGNETIC RELAY WITH HIGH CONTACT RATING AND IMPROVED INSULATION
Helmut Schedele, Hoegling, Fed. Rep. of Germany, assignor to Siemens Aktiengesellschaft, Berlin & Munich, Fed. Rep. of Germany
Filed Feb. 14, 1980, Ser. No. 121,424
Claims priority, application Fed. Rep. of Germany, Mar. 30, 1979, 2912800
Int. Cl.³ H01H *45/02*
U.S. Cl. 335—202 **4 Claims**

1. In an electromagnetic relay having a coil with a plunger therein, said plunger movable in response to a signal operating

said coil, a yoke-and-armature assembly engaging said plunger for co-movement therewith, a movable contact element movable to make and break electrical contact with at least one fixed contact element, said contact elements each having contacting portions, the improvement of: an insulating member

an insulating member comprising

a base which forms a bottom of said relay,

a vertical wall disposed between said magnetic system and said contact elements which divides the interior of said relay into essentially non-communicating portions to prevent arcing therebetween,

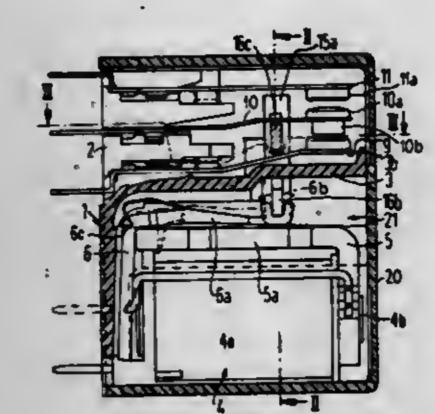

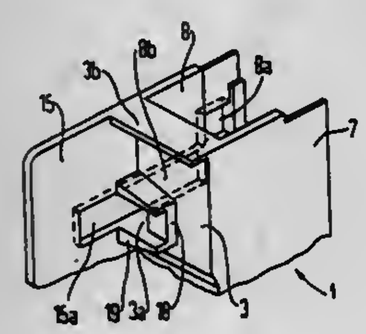

a lateral wall orthogonal to said vertical wall and said base having a lateral groove therein disposed adjacent said contact elements beneath the contacting portions thereof; and

a U-shaped slidable member having a central connecting portion slidably received for lateral movement in said groove and having a first leg perpendicular to said connecting portion engaging said armature and a second leg perpendicular to said central portion engaging said movable contact element,

whereby movement of said plunger is transmitted through said yoke-and-armature assembly and said slidable member to move said movable contact element.

4,302,743
SOLENOID APPARATUS
Kazuo Araki, Tateyama, Japan, assignor to Kabushiki Kaisha Fujikoshi, Toyama, Japan
Filed Oct. 23, 1979, Ser. No. 87,484
Claims priority, application Japan, Oct. 26, 1978, 53-146419
Int. Cl.³ H01F *7/10*
U.S. Cl. 335—251 **6 Claims**

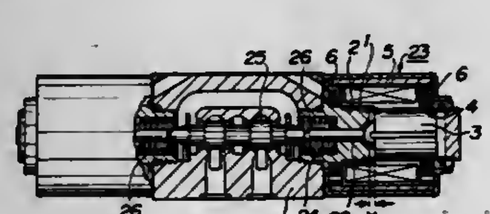

1. A solenoid apparatus adapted for use for hydraulic/air valves or other mechanical devices including a pressure proof tube made from nonmagnetic material, an armature slidably mounted in contact with the inner face of said pressure proof tube, a stationary core secured sealingly to the end portion of said pressure proof tube and having a through opening in the vicinity of the axial center thereof, and a coil assembly including a coil and a yoke surrounding said pressure proof tube and attracting the armature when current flows in said coil, wherein the improvement comprises a cylindrical magnetic ring enclosing a part of said stationary core and a part of said pressure proof tube adjacent the end face at the attracting side of said stationary core, said magnetic ring being fitted fixedly between the stationary core and said coil assembly, an end portion of said magnetic ring adjacent said armature protruding out over the end face at the attracting side of said stationary core toward the armature side thereof.

4,302,744
RESISTOR
David E. Duba, Frazier Park, Calif., assignor to Microplex, Inc., Santa Ana, Calif.
Filed Jun. 30, 1980, Ser. No. 164,313
Int. Cl.³ H01C *1/012*
U.S. Cl. 338—314 **6 Claims**

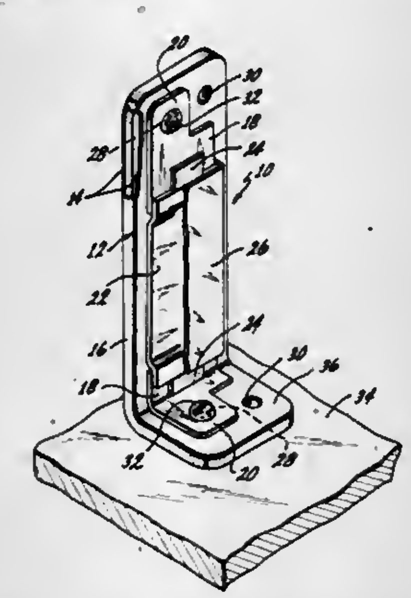

1. In a resistor comprising a substrate having a surface, a resistance element means located on said surface of said substrate, said resistance element means having ends, a resistor terminal means in contact with one of said ends, another resistor terminal means in contact with the other of said ends, both of said resistor terminal means being supported by said substrate, the improvement which comprises:

said substrate comprising an electrically conductive metal sheet having a dielectric coating adhered to one surface thereof, said dielectric coating serving as said surface of said substrate, and

third terminal means for use in connecting said metal sheet to one of said resistor terminal means whereby said resistor may be utilized either as a resistor or as an RC network depending upon whether or not said third terminal means is connected to said metal sheet.

4,302,745
AIRCRAFT LOAD FACTOR OVERLOAD WARNING SYSTEM
John T. Johnston, St. Charles, and George W. Venorsky, Florissant, both of Mo., assignors to The United States of America as represented by the Secretary of the Air Force, Washington, D.C.
Filed Jan. 10, 1980, Ser. No. 110,957
Int. Cl.³ G08B *21/00*
U.S. Cl. 340—27 AT **5 Claims**

1. In an aircraft having a control stick for controlling aircraft roll rate, an air data computer outputting air speed and static

pressure data, fuel quantity measuring means and an exceedance counter system accelerometer the improvement residing in an overload, warning system, said overload warning system comprising,

means for sensing control stick lateral force,

means for continuously monitoring the actual aircraft load factor from the aircraft exceedance counter system accelerometer,

means for continuously computing an allowable aircraft load factor said allowable aircraft load factor being comprised

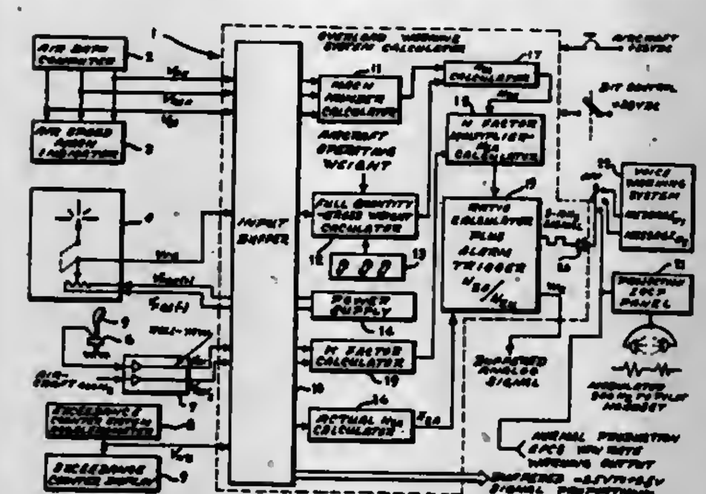

of a symmetrical aircraft load factor derived from aircraft operating weight and stores data, the output of said fuel measuring means, and data from said air data computer, and a predictive unsymmetrical aircraft load factor derived from the output of said means for sensing control stick lateral force,

means for continuously calculating the ratio of current actual load factor to current allowable load factor, and

means for generating a warning signal when said ratio exceeds a given value.

4,302,746
SELF-POWERED VEHICLE DETECTION SYSTEM
John F. Scarzello, Columbia; Daniel S. Lenko, Silver Spring; Albert D. Krall, Rockville; Wayne R. Grine, Crownsville; Robert E. Brown, Silver Spring; George W. Usher, Wheaton, all of Md.; Milton K. Mills, Washington, D.C., and Albert M. Syeles, Silver Spring, Md., assignors to The United States of America as represented by the Secretary of the Navy, Washington, D.C.
Filed Feb. 1, 1980, Ser. No. 117,708
Int. Cl.³ G08G *1/01;* **H01Q** *1/36*
U.S. Cl. 340—38 L **15 Claims**

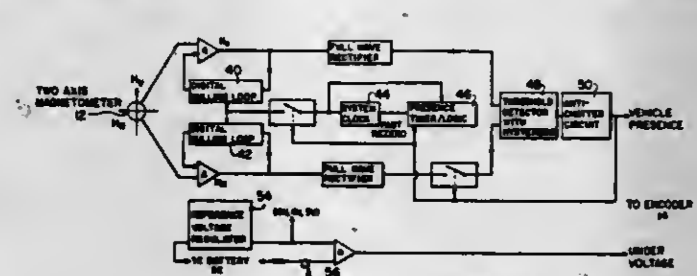

1. A vehicle detection system comprising:

a two-axis magnetometer for generating signals proportional to the vertical and horizontal magnetic field components at a desired monitoring location;

means coupled to said magnetometer for nulling said vertical and horizontal magnetic field signals whenever said signals are below a predetermined threshold level, wherein said nulling means generates a vehicle presence pulse whenever said vertical and horizontal magnetic field signals exceed said threshold level;

encoder means coupled to said nulling means for generating a first multi-tone signal upon the occurence of the leading edge of said vehicle presence pulse and a second multi-tone signal upon the occurence of the trailing edge of said vehicle presence pulse;

transmitter means coupled to said encoder means for generating a radio frequency signal proportional to said multi-tone signals;

first antenna means coupled to said transmitter means for radiating said radio frequency signal as a vertically polarized wave;

second antenna means spaced apart from said first antenna means for receiving said vertically polarized wave;

receiver means coupled to said second antenna means for detecting and demodulating said radio frequency signal; and decoder means coupled to said receiver means for providing a control signal upon receipt of said multitone signals.

4,302,747
ANTI-THEFT DEVICE FOR ENGINE PROPELLED VEHICLES
Neal W. Belmuth, Great Neck, N.Y., assignor to Nationwide Ultraseal Inc., Westbury, N.Y.
Filed Jul. 27, 1979, Ser. No. 61,395
Int. Cl.³ B60R *25/04, 25/10*
U.S. Cl. 340—64 **10 Claims**

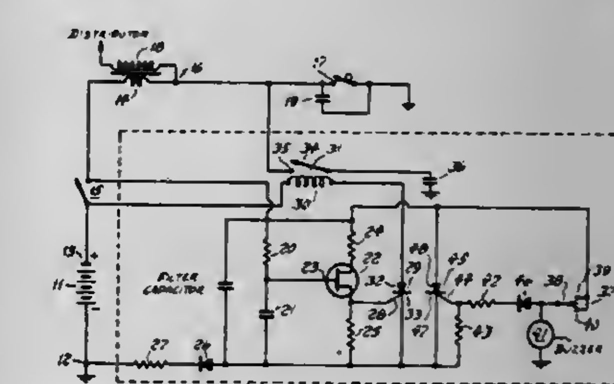

1. An anti-theft device for an engine propelled vehicle wherein said vehicle includes an ignition switch connecting a source of electrical energy to an ignition coil and ignition points for delivering high voltage electrical energy from said ignition coil to a distributor, said device comprising:

a first bistable means having an engine operating position and an engine disabling position, said first bistable means normally assuming said operating position;

a second bistable means capable of assuming a conducting state and a non-conducting state and connected to function said first bistable means to its disabling position when said second means assumes its conducting state;

a timing network in circuit with said ignition switch to commence timing upon the closure of said ignition switch and having its output coupled to said second bistable means for causing said second bistable means to assume its conducting state at the termination of the timing period;

a concealed switch means coupled to activate,

an inhibit means, said inhibit means being connected to said first bistable means to prevent said first bistable means from assuming the disabling position upon operation of said concealed switch means.

4,302,748
TURN SIGNAL AND HAZARD SIGNAL CONTROL CIRCUIT
Leroy A. Gant, 521 Jasmine La., Santa Maria, Calif. 93454
Filed Nov. 19, 1979, Ser. No. 95,549
Int. Cl.³ B60Q *1/00, 1/40, 1/46*
U.S. Cl. 340—67 **14 Claims**

1. An electronic control circuit for controlling left and right turn signal lamps, comprising:

(a) turn signal means for activating the left turn signal lamp or the right turn signal lamp and for then automatically

deactivating the left turn signal lamp or the right turn signal lamp after a predetermined time period;

(b) hazard signal means for actuating the left turn signal lamp and the right turn signal lamp to flash simultaneously;

(c) means, connected to said turn signal means, for overriding said hazard signal means for activating the left turn signal lamp or the right turn signal lamp for the predeter-

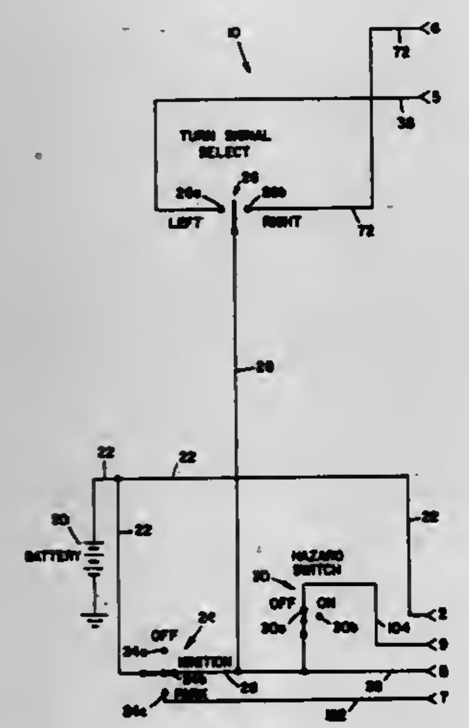

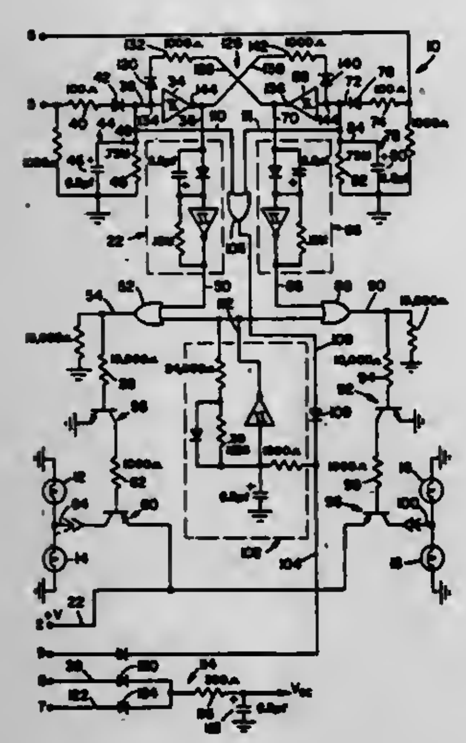

mined time period and for then automatically activating said hazard signal means to flash the left turn signal lamp and the right turn signal lamp simultaneously; and

(d) cross coupling network means, connected to said turn signal means, for deactivating one of the left turn signal lamp or the right turn signal lamp during the predetermined time period in response to activating the other of the left turn signal lamp or the right turn signal lamp for the predetermined time period.

4,302,749

AUTOMATIC FIRING FOR CLAY PIGEON LAUNCHER

Erkki Ylonen, Tutkamiehentie 9,, SF-41160 Tikkakoski, Finland

Filed Jun. 27, 1979, Ser. No. 52,573

Claims priority, application Finland, Jul. 3, 1978, 782129

Int. Cl.[3] G08B *5/22*; F14C *19/12*

U.S. Cl. 367—198 **5 Claims**

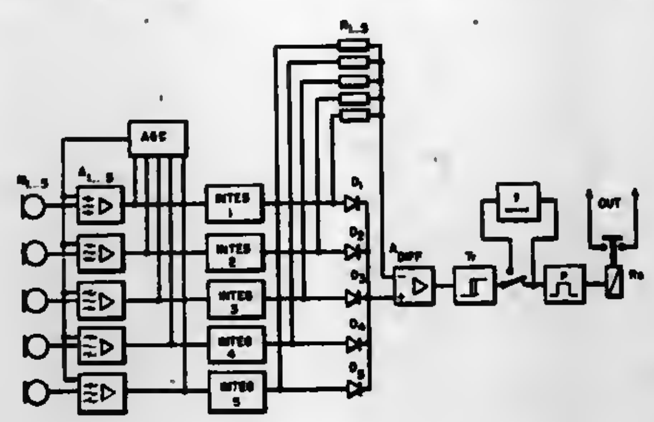

1. A voice actuated system for electrically operating, in response to a command from one of a plurality of users, a clay pigeon launcher or the like, comprising

means associated with each of a plurality of stations for converting sound into respective electric signal outputs,

means for determining the average signal level of said outputs from all of said sound means,

means for comparing the level of the signal outputs of each of said sound converting means and selecting the one having the highest level,

means for comparing the output from the sound converting means having the highest signal level with the average signal level and passing an operating signal when the highest signal level is greater by a predetermined amount than said average signal, and

means responsive to said operating signal for ergizing said launcher.

4,302,750

DISTRIBUTION AUTOMATION SYSTEM

Romesh T. Wadhwani, and Joseph F. Russial, both of Pittsburgh, Pa., assignors to Compuguard Corporation, Pittsburgh, Pa.

Filed Aug. 3, 1979, Ser. No. 63,568

Int. Cl.[3] H04Q *11/00*

U.S. Cl. 340—870.02 **43 Claims**

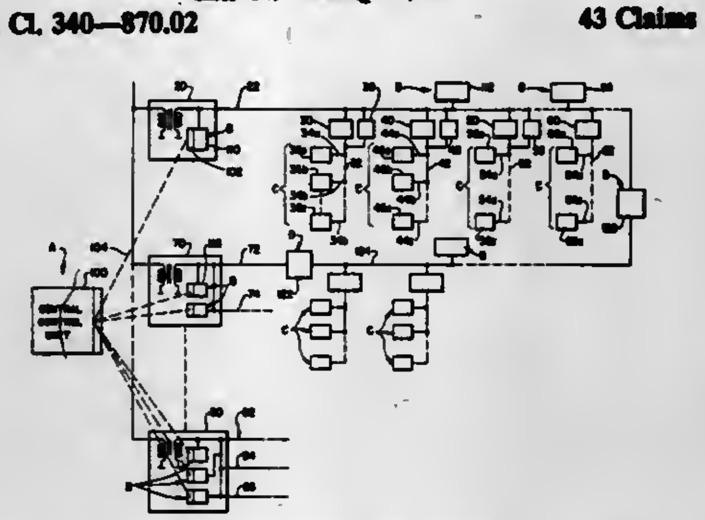

1. A communications terminal comprising:

communication interface means for receiving and transmitting communications of a type including command communications which convey commands, individual power usage communications which convey usage data from each of a plurality of remote usage meters and cumulative usage communications for conveying usage data accumulated from at least part of the plurality of remote power usage meters;

identifying means for identifying a specific one of the remote usage meters associated with each of the individual usage communications, said identifying means being operatively connected with said communication interface means;

storing means for storing the usage data associated with each of the remote meters, said storing means being operatively connected with said communication interface means and said identifying means to obtain individual power usage data and identifications of remote meters;

command responding means for responding to a command conveyed in a command communication, said command responding means being operatively connected with said communication interface means, said comand responding means comprising means for retrieving cumulative usage data from said storing means in response to a cumulative usage retrieval command;

communication forming means for forming communications, said communication forming means being operatively connected with said usage retrieving means to receive cumulative usage data and being operatively connected with said communication interface means to supply formed communications to be transmitted, whereby the communication forming means forms and the communication means transmits cumulative power usage communications; and

cost zone indicating means for indicating time of day cost zones, said cost zone indicating means being operatively connected with said storing means to provide an indication of the cost zone in which individual usage data is received, whereby the cumulative power usage communications indicate the amount of power measured by each remote meter in each cost zone.

4,302,751

DRIVER CIRCUIT FOR ELECTROCHROMIC DISPLAYS

Hiroshi Nakauchi, Nara; Yasuhiko Inami, Tenri; Hisashi Uede, Wakayama, and Tomio Wada, Nara, all of Japan, assignors to Sharp Kabushiki Kaisha, Osaka, Japan

Filed Aug. 19, 1977, Ser. No. 826,114

Claims priority, application Japan, Aug. 20, 1976, 51-99803

Int. Cl.[3] G08B *5/36*

U.S. Cl. 340—763 **10 Claims**

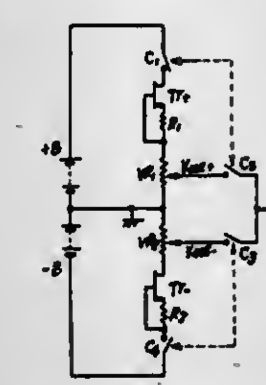

1. A drive system for an electrochromic display comprising:

an electrochromic material held between two substrates, a plurality of display pattern segment electrodes and a counter electrode,

each combination of said display pattern segment electrodes with said counter electrode defining a different desired display pattern;

a power source delivering a variable current and having an output voltage level subject to variation and a driver circuit means for applying coloration and bleaching voltage signals to said display pattern segment electrodes;

a constant voltage circuit means connected between said power source and said driver circuit for compensating for variations in said output voltage level of said power source and applying a constant voltage of a fixed level to said driver circuit to stabilize coloration and bleaching operations in said electrochromic display, said constant voltage circuit means including constant current producing transistor means responsive to the variable current delivered by said power source for producing a constant current and converting means connected to said transistor means and responsive to said constant current for producing a constant voltage; and

switching means interposed between said power source and said constant voltage circuit means for placing said constant voltage circuit means in an operative condition only during coloration and bleaching operations.

4,302,752

ELECTRONIC REMINDER

David A. Weitzler, 25 Fraser Rd., Framingham, Mass. 01701

Continuation of Ser. No. 906,248, May 15, 1978, abandoned.

This application Aug. 8, 1979, Ser. No. 64,828

Int. Cl.[3] G08B *1/00*

U.S. Cl. 340—309.1 **17 Claims**

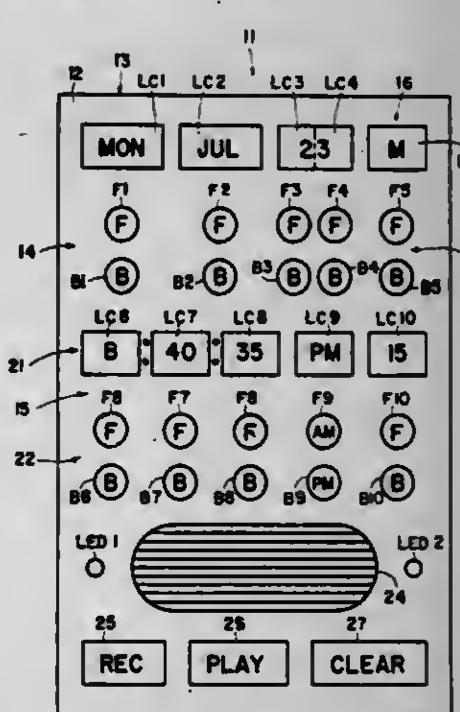

1. A clock apparatus for producing reminders and comprising:

a computer means comprising memory means for receiving and storing information and processor means for processing the stored information;

a clock means providing timing signals to said processor means;

a storage means for receiving a plurality of distinguishable messages, said storage means comprising a plurality of distinct storage elements, one for receiving each of said messages;

reproducer means for reproducing the messages recorded on said elements;

reminder programming means for selectively introducing into said memory means information identifying a plurality of specific future times, each associated with any selected one of said elements; said reminder programming means comprising calendar setting means for selectively introducing into said memory means the dates of said specific future times, periodicity means for introducing into said memory means information identifying a predetermined periodicity of each of said specific times and time setting means for selectively introducing into said memory means the time of day of said specific times;

signal means energized by said processor means in response to the occurrence of any of said times introduced into said memory means; and

selector means for selecting and preparing any of said elements for operative coupling to said reproducer means.

4,302,753
MULTI-FUNCTION COMBUSTION DETECTING DEVICE
Frederick J. Conforti, Aurora, Ill., assignor to Pittway Corporation, Northbrook, Ill.
Filed Jan. 26, 1978, Ser. No. 872,444
Int. Cl.³ G08B *17/10, 29/00*
U.S. Cl. 340—628 20 Claims

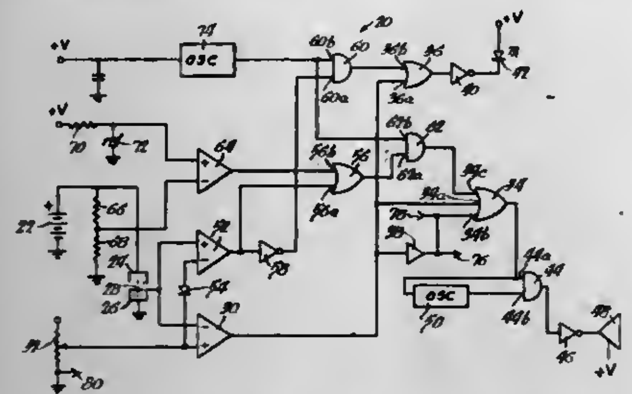

1. An improved warning device, comprising means for detecting the occurrence of predetermined phenomena; means for interconnecting said device with at least one other warning device which generates an interconnect signal when the other warning device detects said predetermined phenomena, and indicator means for generating a first sensibly discernible signal in response to said detecting means detecting said phenomena, a second sensibly discernible signal in response to the occurrence of the interconnect signal, a third sensibly discernible signal whenever neither of said first and second signals is being generated and means for monitoring the sensitivity of said detector means to said phenomena; said indicator means generating a fourth sensibly discernable signal in response to said sensitivity decreasing to at least a selected level, said indicator means generating said third sensibly discernable signal whenever none of said first, second and fourth signals is being generated.

4,302,754
WEAR PARTICLE DISINTEGRATOR MONITOR
James H. Magee, Palmyra, N.J., and Thomas E. Tauber, Lansdowne, Pa., assignors to Technical Development Co., Glenolden, Pa.
Filed Feb. 12, 1979, Ser. No. 11,553
Int. Cl.³ G01R *33/12;* G08B *21/00*
U.S. Cl. 340—631 7 Claims

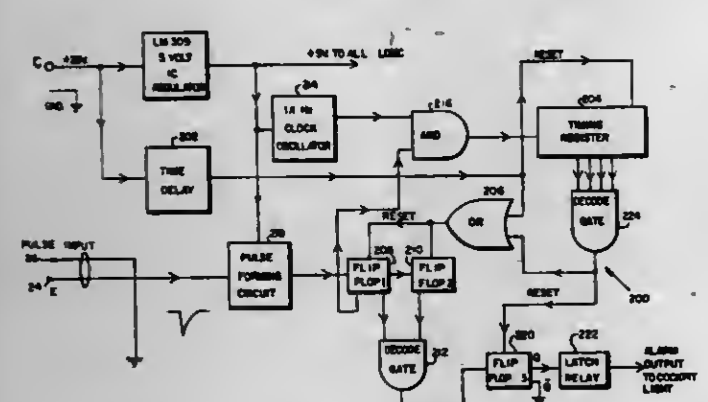

1. An apparatus for the attraction, collection and destruction of wear particles in fluid systems and adapted to provide output information on apparatus performance comprising:

a wear particle detector means for generating wear particle signals representative of critical particle size and non-critical particle size, respectively,

said wear particle detector means including a digital pulse generation means for generating said wear particle signals as digital pulses whenever a wear particle of non-critical size is destroyed; and

a counting means adapted to be connected to said digital pulse generation means to keep a record of the number of said digital pulses.

4,302,755
VISUAL DISPLAY UNIT AND DISPLAY METHOD FOR A PROGRAMMABLE COMPUTER
Federico Pisani, Scarmagno, and Alessandro Graciotti, Ivrea, both of Italy, assignors to Ing. C. Olivetti & C., S.p.A., Italy
Filed Sep. 20, 1979, Ser. No. 77,198
Claims priority, application Italy, Sep. 20, 1978, 69167 A/78
Int. Cl.³ G06F *3/153*
U.S. Cl. 340—734 9 Claims

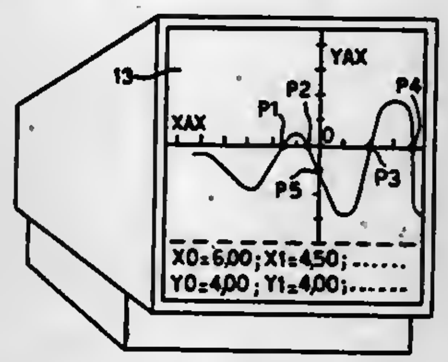

1. A visual display unit for displaying graphical images, comprising a display screen and a control unit for controlling the screen in order to display a marker formed by a pair of orthogonal axes whose point of mutual intersection can be positioned at selected points on the screen, characterized by means for causing the display of the points of intersection of the marker axes with the lines which make up the graphical image, with a luminous intensity which is greater than the luminous intensity of the remaining points displayed, further characterized in that the screen comprises a general region for displaying graphical images and alphanumeric characters and an alphanumeric region, and in that the control unit comprises means for displaying in the general region the graphical image, the marker axes and the said points of intersection, and for displaying in the alphanumeric region the coordinates of the points of intersection of the marker axes with the graphical image and the point of intersection of the marker axes.

4,302,756
MULTIPLEXED DISPLAY SYSTEM
Roger A. Frankland, Scottsdale, Ariz., assignor to Beckman Instruments, Inc., Fullerton, Calif.
Filed Nov. 29, 1979, Ser. No. 98,579
Int. Cl.³ G09F *9/32*
U.S. Cl. 340—802 16 Claims

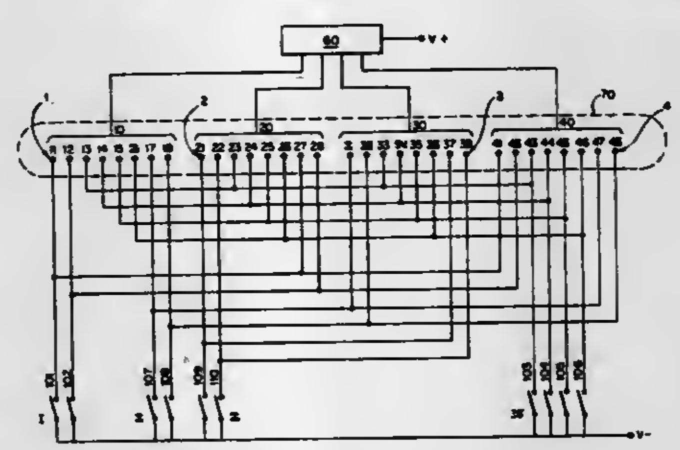

1. A display apparatus for selectively displaying a plurality of symbols, comprising

a plurality of consecutively positioned electrodes, each electrode being associated with a separate symbol, the electrodes being divided into a plurality of electrode groups, and the electrode groups being disposed in a row;

means for selectively enabling each electrode group so that each symbol is displayed if an activating signal is applied to the electrode associated with that symbol while the group containing that electrode is enabled; and

a plurality of switching circuits, the number of switching circuits being less than the number of electrodes, wherein each switching circuit connects to at least one electrode and controllably alternates between an on state wherein it applies the activating signal to all the electrodes to which it connects and an off state wherein it does not apply the activating signal to any of the electrodes to which it connects, wherein in each electrode group, except for the first group in the row, the electrode in that group closest to the preceding group in the row connects to one of the switching circuits other than those connected to the electrodes in the preceding group.

4,302,757
BORE TELEMETRY CHANNEL OF INCREASED CAPACITY
William L. Still, Purcellville, Va., assignor to Aerospace Industrial Associates, Inc., Purcellville, Va.
Filed May 9, 1979, Ser. No. 37,318
Int. Cl.³ G01V *1/40*
U.S. Cl. 340—854 28 Claims

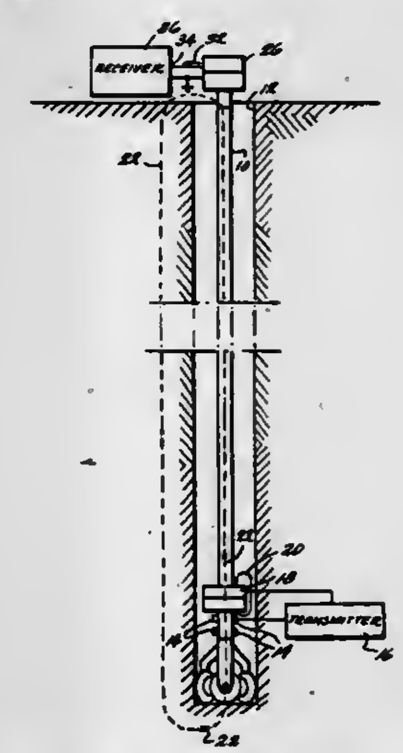

1. A telemetry system for electromagnetic communication of input digital data of a first number base between a first and a second point spaced along the length of a borehole on a conductive member disposed in the borehole of a dispersive medium and making contact with the earth comprising:

transmitter means electrically coupled to said conduction member at said first point, for transmitting low frequency, narrow bandwidth electrical signals of a second number base along said member, said transmitter means including means for generating two or more mutually orthogonal carrier frequencies and multi-level modulation means responsive to data values for modulating said two or more carrier frequencies; said electrical signals second number base being higher than said input data first number base; and

receiver means electrically coupled to said conductive member at said second point, including demodulation means for receiving said electrical signals.

27. A signal receiver for use in communicating electromagnetic signals between spaced-apart first and second locations along the length of an elongated borehole extending into the dispersive medium of the earth and containing an elongated conductive member therein, said receiver comprising:

electromagnetic signal receiving means for receiving said electromagnetic signals and for converting them into two demodulated analog signals derived from two orthogonal carrier frequency signals,

two analog-to-digital conversion means for converting said demodulated analog signals into two corresponding groups of multiple-valued multiple-bit representing digital data signals, and

means to combine said groups into binary-valued bit-representing digital data signals.

4,302,758
RADAR SYSTEM FOR DETERMINING RANGE AND SPEED OF AN OBJECT
Jean-Pierre Tomasi, Velizy, France, assignor to U.S. Philips Corporation, New York, N.Y.
Filed Nov. 13, 1979, Ser. No. 93,334
Claims priority, application France, Jan. 12, 1978, 78 33976
Int. Cl.³ G01S *13/32*
U.S. Cl. 343—9 R 5 Claims

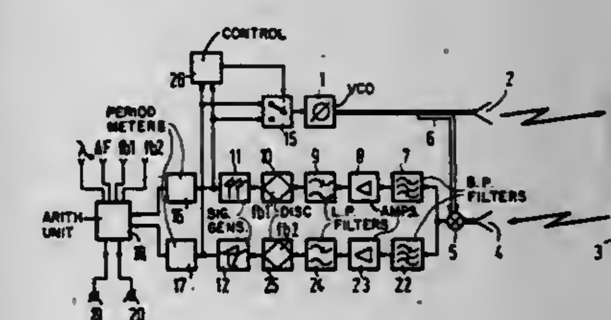

1. In a system for determining the range H to an object and the relative velocity v of the object, the combination comprising means for generating a first and second high-frequency signal, said first high-frequency signal having a time-variable frequency which represents an FM-modulated version of a first high-frequency carrier signal and said second high-frequency signal having a time-variable frequency which represents an FM-modulated version of a second high-frequency carrier signal; means for transmitting said first high-frequency signal towards said object; means for receiving said first high-frequency signal reflected from the object; means for mixing the received first high-frequency signal with the first high-frequency signal to be transmitted for generating a first beat signal having a first mathematical expression wherein α represents the angle at which a point of the object is seen; said means for transmitting also transmitting said second high-frequency signal towards the object; said means for receiving also receiving said second high-frequency signal reflected from the object; said means for mixing also mixing the received second high-frequency signal with the second high-frequency signal to be transmitted for generating a second beat signal of frequency which is defined by a second mathematical expression including said angle α; and an arithmetic unit for iteratively determining the angle α, from the first and the second mathematical expression, at which one of the two beat frequencies has the lowest value, and for computing the value of H and the value of v by substituting this value of α in the first and the second mathematical expression.

4,302,759

RADIO DIRECTION FINDER

Kenzo Mori, and Hyo Yasuda, both of Tokyo, Japan, assignors to Taiyo Musen Co. Ltd., Tokyo, Japan

Filed Aug. 8, 1979, Ser. No. 64,872

Int. Cl.³ G01S *5/04*

U.S. Cl. 343—121 **7 Claims**

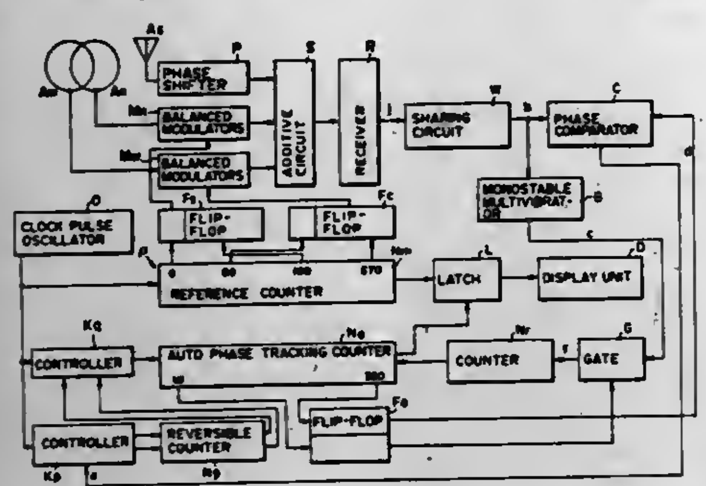

1. A radio direction finder for determining the bearing of received radio wave, comprising:

a nondirectional antenna having an output;

a plurality of directional antennas having a directivity and respective outputs;

an oscillator means for producing AC signals, each having a phase angle corresponding to the configuration of each of said directional antennas and including reference oscillator means for producing output pulses, reference counter means for counting said output pulses from said reference oscillator means to produce count outputs, and flip-flop means for receiving the count outputs of said reference count means, said flip-flop means being responsive to said count outputs of said modulator means for causing said modulator means to modulate the respective outputs of said directional antennas in accordance therewith;

modulator means for modulating the respective outputs of said directional antennas with said respective AC signals to derive respective modulation outputs;

phase-shifting means for phase-shifting the output of said nondirectional antenna to produce a phase-shifted output thereof;

additive means for superimposing the respective modulation outputs of said modulator means on said phase-shifted output of said nondirectional antenna to develop a synthesized output;

receiving circuit means for demodulating said synthesized output of said synthesizing means to recover said AC signals, and producing an output having a phase;

tracking circuit means for automatically tracking the phase of the output of said receiving circuit means so as to derive the bearing of the received radio wave; and

display means for displaying the bearing of the received radio wave numerically.

4,302,760

WIDEBAND VERTICAL DOUBLET ANTENNA

Shlomo Laufer, Kiryat Ono, Israel, assignor to Tadiran Israel Electronics Industries Ltd., Tel Aviv, Israel

Filed May 15, 1980, Ser. No. 150,134

Claims priority, application Israel, May 16, 1979, 57312

Int. Cl.³ H01Q *1/32*

U.S. Cl. 343—715 **10 Claims**

1. A wideband VHF antenna of omnidirectional directivity, comprising a substantially vertical elongated structure including an upper part comprising a plurality of wires of different length, electrically insulated from each other, and of a length of about one-fourth of the longest wave-length to about one-fourth of the shortest wave-length of the waveband, said plurality of wires being arranged with their contiguous parts parallel to each other and close to each other, said vertical elongated structure also including a lower part in the form of a coaxial structure having an inner wire and an outer conducting sheath, the lower ends of the said plurality of wires being connected with the inner wire of the said coaxial structure, said

inner wire comprising an impedance multi-step transformer of at least two stages, said inner wire constituting the winding of at least one ferrite toroid forming an effective ground isolation, the outer conducting sheath of the coaxial structure constituting the lower part of a dipole, the impedance of the antenna being matched to that of at least one of the receiver and transmitter with which it is to be used.

4,302,761

INK JET SYSTEM PRINTER OF THE CHARGE AMPLITUDE CONTROLLING TYPE CAPABLE OF PRINTING DIFFERENT SIZE CHARACTERS

Yoichi Yamamoto, Nara, Japan, assignor to Sharp Kabushiki Kaisha, Osaka, Japan

Continuation of Ser. No. 837,416, Sep. 28, 1977, abandoned. This application Aug. 22, 1979, Ser. No. 68,701

Claims priority, application Japan, Sep. 30, 1976, 51-117963

Int. Cl.³ G01D *15/18*

U.S. Cl. 346—75 **17 Claims**

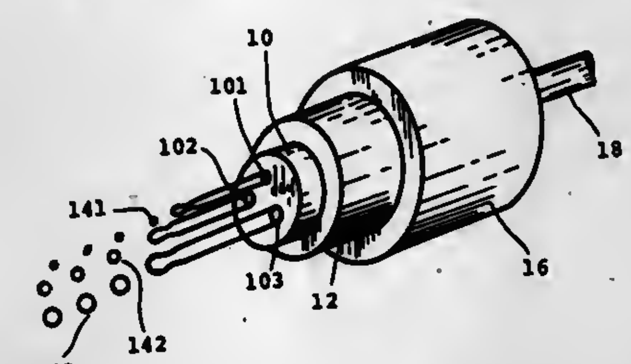

1. An ink jet system printer of the charge amplitude controlling type for emitting charged droplets from an ink droplet issuance unit directed toward a record receiving medium, and selectively deflecting said ink droplets in accordance with said charge carried thereon as said droplets pass through a constant high voltage electric field established by said deflecting means, thereby printing desired symbols of a predetermined size on said record receiving medium in a dot-matrix fashion comprising:

emitting means for emitting a plurality of ink streams from said ink droplet issuance unit which vary in size and electric charge according to said size of said symbols to be printed;

each of said ink streams emitted from said emitting means comprising a plurality of ink droplets and each of said ink droplets associated with a selected one of said ink streams having a size which is different than the size of each of said droplets associated with either of said remaining ink streams;

a plurality of charging electrode means at one end of said ink droplet issuance unit for generating a plurality of charging signals thereby applying an electric charge having a predetermined amplitude to each of said droplets associated with said respective ink streams;

each of said charging electrode means corresponding to a respective one of said ink streams and said amplitude of said charge possessed by each of said ink droplets varying proportionately with said size of said symbols to be printed;

wherein each of said plurality of charging signals generated by said plurality of charging electrode means have different phases relative to one another, the phases of each of said charging signals being separately and independently controllable; and

wherein one of said plurality of ink streams comprising ink droplets of a predetermined size is selected for printing purposes in accordance with said size of said symbols to be printed, one of said charging signals being selected to charge the ink droplets of said one of said plurality of ink streams, the ink droplets of the remaining ink streams emitted from said emitting means being precluded from receiving an electric charge from said charging signals generated by said charging electrode means.

4,302,762

INK JET SYSTEM PRINTER INCLUDING PLURAL INK DROPLET ISSUANCE UNITS FOR ONE COLUMN PRINTING

Masahiko Aiba, Nara, Japan, assignor to Sharp Kabushiki Kaisha, Osaka, Japan

Division of Ser. No. 886,597, Mar. 14, 1978, Pat. No. 4,210,919. This application Nov. 30, 1979, Ser. No. 98,954

Claims priority, application Japan, Mar. 14, 1977, 52-28197; May 20, 1977, 52-59215

Int. Cl.³ G01D *15/18*

U.S. Cl. 346—75 **10 Claims**

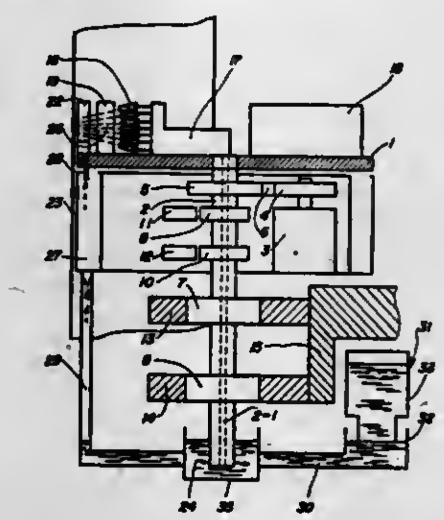

1. In an ink jet system printer which emits charged ink droplets from an ink droplet generating means toward a record receiving medium, deflects said charged ink droplets and deposits said deflected ink droplets on said record receiving medium, wherein as desired pattern is printed on said record receiving medium, said ink droplet generating means comprising:

a rotatable supporting table;

means for rotating said rotatable supporting table at a selected rotational speed about a center of rotation;

at least one ink droplet issuance means mounted on said rotatable supporting table for issuing ink droplets radially outward from said center of rotation; and

centrifugal pressure means mounted in the center of said rotatable supporting table and connected to said ink droplet issuance means for delivering ink liquid to the latter under pressure created by centrifugal force generated in response to rotation of said rotatable supporting table, said centrifugal pressure means including,

pressure chamber means extending substantially radially outward from said center of rotation,

inlet means for said pressure chamber means and positioned at said center of rotation of said rotatable supporting table for introducing ink liquid into said pressure chamber means, and

outlet means formed in said pressure chamber means and connected to said ink droplet issuance means for supplying said ink liquid to said ink droplet issuance means under a predetermined pressure which is proportional to said selected rotational speed of said rotatable supporting table.

4,302,763

SEMICONDUCTOR DEVICE

Norikazu Ohuchi; Hisayoshi Yamoto; Hisao Hayashi, and Takeshi Matsushita, all of Atsugi, Japan, assignors to Sony Corporation, Tokyo, Japan

Filed Aug. 9, 1979, Ser. No. 65,262

Claims priority, application Japan, Aug. 14, 1978, 53-98824; Aug. 14, 1978, 53-98826; Jun. 29, 1979, 54-83211

Int. Cl.³ H01L *29/161*

U.S. Cl. 357—16 **2 Claims**

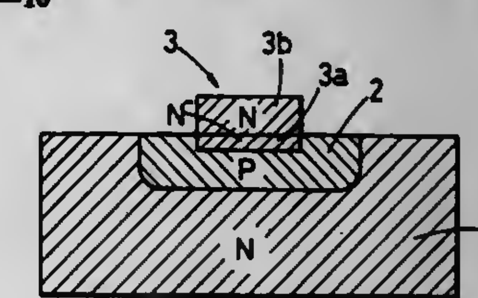

1. A semiconductor device comprising, a monocrystalline silicon substrate having a first region of a first conductivity type, a second region of a second conductivity type in said substrate, a third region of the first conductivity type having a first portion adjacent to said second region, said first portion of said third region forming a junction with said second region, a second portion of said third region comprised of phosphorous and polycrystalline silicon doped with oxygen, the band gap energy of said second portion being larger than that of said substrate, and means for forwardly biasing said junction to transport majority carriers in said third region to said first region.

4,302,764

NONDESTRUCTIVE READ-OUT DYNAMIC MEMORY CELL

Frank F. Fang, and Hwa N. Yu, both of Yorktown Heights, N.Y., assignors to International Business Machines Corporation, Armonk, N.Y.

Continuation of Ser. No. 904,115, May 8, 1978, abandoned, which is a continuation of Ser. No. 755,887, Dec. 30, 1976, abandoned. This application Jun. 29, 1979, Ser. No. 53,471

Int. Cl.³ H01L *29/78*

U.S. Cl. 357—23 **13 Claims**

1. An array of semiconductor storage devices each semiconductor storage device comprising,

a semiconductor substrate of one conductivity type,

a source and drain region of opposite conductivity type disposed in said substrate and a channel region of said opposite conductivity type disposed between and interconnecting said source and drain regions the surface of said channel region being in electrically isolated relationship with the surface of said substrate outside of said channel region,

a gate electrode disposed in insulated spaced relationship with said channel region,

means connected to said device for applying a first voltage of one polarity for forming an inversion layer at the surface of said channel region rendering said device conductive and for applying a second voltage of opposite polarity for forming a depletion region between said source and drain regions rendering said device non-conductive, and,

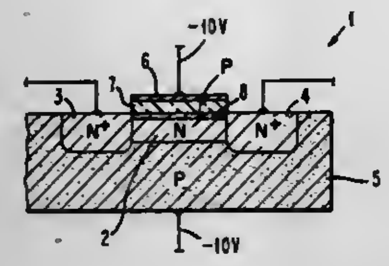

means connected to said gate electrode and said substrate for applying a fixed value of bias voltage to maintain said inversion layer or said depletion region after said first or second voltage is applied.

4,302,765

GEOMETRY FOR FABRICATING ENHANCEMENT AND DEPLETION-TYPE, PULL-UP FIELD EFFECT TRANSISTOR DEVICES

Gary L. Heimbigner, Anaheim, Calif., assignor to Rockwell International Corporation, El Segundo, Calif.

Continuation of Ser. No. 939,768, Sep. 5, 1978, abandoned. This application Feb. 4, 1980, Ser. No. 118,041

Int. Cl.³ H01L *29/78*

U.S. Cl. 357—23 **4 Claims**

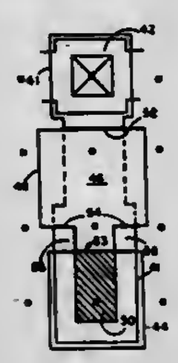

1. An integrated circuit comprising:
a substrate of semiconductor material of a first conductivity type;
a field effect transistor formed in said substrate, including a channel diffusion region, a source diffusion region, and a drain diffusion region; and
a polysilicon layer disposed on said substrate, said layer including a first portion forming the gate electrode of said field effect transistor, a second portion electrically connected to said first portion, said entire second portion overlapping and directly electrically connected to a portion of said source diffusion region, said first portion including a first edge substantially adjacent said drain diffusion region forming one end of said channel region of said field effect transistor, and a second edge substantially adjacent said source diffusion region forming the other end of said channel region, said second edge being spaced from said second portion, and a third portion electrically connecting said first portion and said second portion, said third portion being disposed on said substrate so that the normal projection of said third portion on the plane of said substrate lies entirely within said channel diffusion region.

4,302,766

SELF-LIMITING ERASABLE MEMORY CELL WITH TRIPLE LEVEL POLYSILICON

Daniel C. Guterman, and Te-Long Chiu, both of Houston, Tex., assignors to Texas Instruments Incorporated, Dallas, Tex.

Filed Jan. 5, 1979, Ser. No. 1,097

Int. Cl.³ H01L *27/02;* **B01J** *17/00*

U.S. Cl. 357—41 **15 Claims**

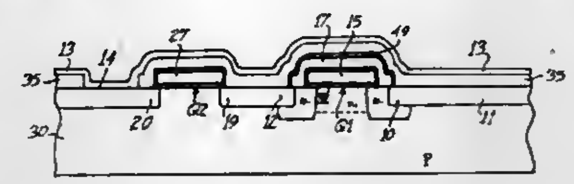

1. An electrically erasable insulated gate field effect transistor memory device comprising source and drain regions defined in a face of a body of semiconductor material, a floating gate on said face between the source and drain regions insulated from the semiconductor material by a gate insulator, a control gate overlying part of the floating gate and insulated therefrom by an interlevel insulator, conductive means overlying said face and insulated therefrom by an insulating layer with a portion of the conductive means overlying a segment of the floating gate, said segment being laterally spaced on said face from said part and from the control gate, the conductive means partially overlying the control gate, an insulating coating on said segment separating the portion of the conductive means from said segment but permitting the floating gate to discharge electrons into the conductive means upon application of high voltage thereto.

4,302,767

CONTROLLED POWER-SEMICONDUCTOR COMPONENT HAVING AN ANNULAR CAGE

Dieter Eisele, Lampertheim, Fed. Rep. of Germany, assignor to Brown, Boveri & Cie Aktiengesellschaft, Mannheim-Käfertal, Fed. Rep. of Germany

Filed Sep. 7, 1979, Ser. No. 73,522

Claims priority, application Fed. Rep. of Germany, Sep. 16, 1978, 2840400

Int. Cl.³ H01L *23/42, 23/44, 23/46*

U.S. Cl. 357—79 **9 Claims**

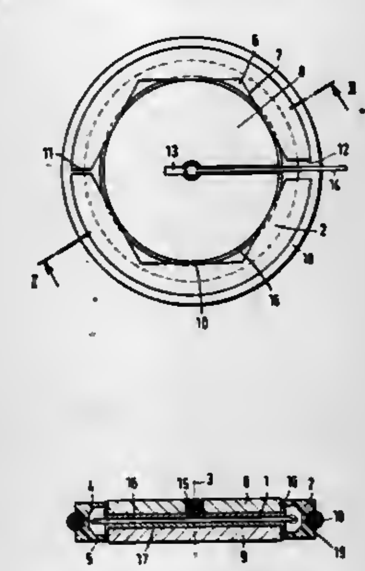

1. Controlled power semiconductor component, comprising a disc-shaped silicon body having a surface on each side thereof, two insulated ductile electrodes each having surfaces on each side thereof, one of said surfaces of each of said ductile electrodes being in pressure contact with one of said surfaces of said silicon body, two pressure-contact discs formed of one of the group consisting of molybdenum and tungsten each having an edge, and a surface on one side thereof in pressure contact with the other of said surfaces of said ductile electrodes, at least one control electrode connection being electrically insulated from and conducted through a respective ductile electrode and contact disc on one of said sides of said silicon body, a flat annular cage formed of insulating material for insertion in a housing centralizing said silicon body and contact discs, said cage having two circular disc-shaped flanges being disposed one above the other in axial direction of said silicon body and a hollow cylindrical middle portion connecting said flanges to each other forming a single piece, each of said flanges having internal polygonal recesses formed therein forming polygonal surfaces being tensionally connected to said edges of said contact discs, said cage being divided into two parts along the diameter thereof.

4,302,768

SYSTEM FOR REDUCING OR SUPPRESSING NOISE COMPONENTS IN TELEVISION SIGNAL

Takashi Kamura, and Hiroshi Taniguchi, both of Hirakata, Japan, assignors to Matsushita Electric Industrial Co., Ltd., Osaka, Japan

Filed Dec. 12, 1979, Ser. No. 102,996

Claims priority, application Japan, Dec. 14, 1978, 53-155629

Int. Cl.³ H04N *9/535*

U.S. Cl. 358—36 **7 Claims**

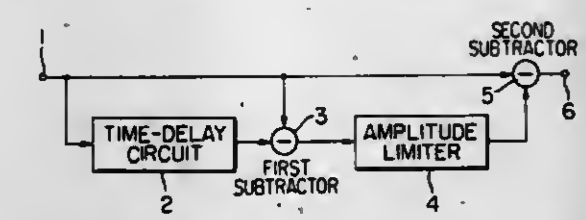

4. In a color television signal recording and reproducing system of the type in which the luminance signal component in the color television signal is angular modulated, the carrier color signal in said color television signal is converted into a signal having a frequency lower than that of said carrier color signal, and said frequency converted carrier color signal and said angular modulated luminance signal are superposed and recorded on and reproduced from a signal recording medium, wherein the carrier frequency of said frequency converted carrier color signal is so selected that the major component of the cross modulated component which results from recording said superposed two signals and which is mixed in the luminance signal obtained by the demodulation of said angular modulated luminance signal has ½ line offset relation with respect to said demodulated luminance signal, whereby the signal recorded on said recording medium is reproduced, said angular modulated luminance signal is separated from the superposed signal by the frequency band separation and is demodulated, a system for reducing the cross modulation noise components in the reproduced television signal wherein said demodulated luminance signal is distributed into three channels, said demodulated luminance signal which is distributed to a first channel is applied to a first means which delays the television signal for one horizontal scanning period, the output from said first means is applied to one of two input terminals of a second means which derives the difference between the signals applied to said two input terminals thereof, said demodulated luminance signal which is distributed into a second channel is applied to the other input terminal of said second means, the output from said second means is applied to a third means which limits the amplitude of the input signal applied thereto, and the demodulated luminance signal distributed into a third channel is combined with the output signal from said third means, whereby said cross modulated component which is produced in the signal recording and reproducing process, and mixed into said reproduced luminance signal having ½ line offset relation with respect thereto is removed.

4,302,769

TRICHROMATIC BEAM SPLITTER

Louis L. Andry, and Michael C. Hoover, both of Houston, Tex., assignors to Geosource Inc., Houston, Tex.

Filed May 30, 1979, Ser. No. 43,672

Int. Cl.³ H04N *9/09*

U.S. Cl. 358—55 **5 Claims**

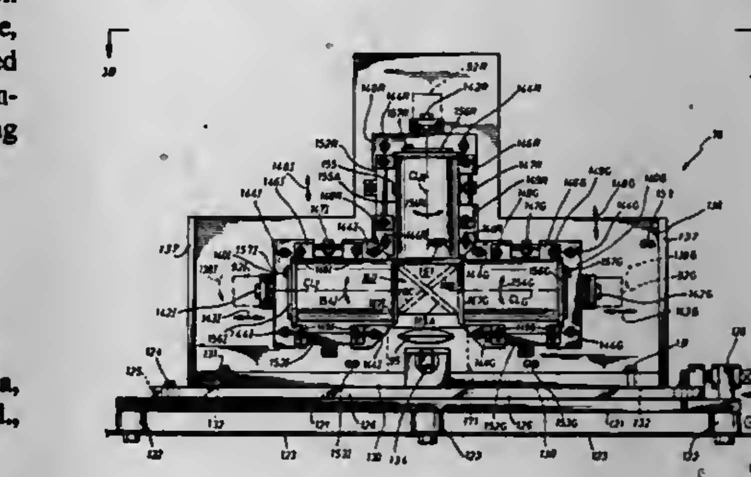

1. An optics module for use with an apparatus for sorting articles by color, the sorting occurring through the analysis of video signals representative of light energy reflected from the articles being sorted as they pass through a viewed area, the video signals being generated by a plurality of vidicon tubes, comprising:
a lens disposed at a predetermined distance form the viewed area, the lens being adapted to focus reflected light energy incident thereon onto a photosensitive target of the vidicon tubes, the vidicon tubes being disposed at a substantially equal focal length from the lens; and
a beam splitter arrangement disposed optically adjacent to the lens along the axis of the incident light energy, the beam splitter arrangement including first, second, and third elements, the first element having first and second opposed surfaces and being disposed at a 45° angle with respect to the axis of the incident light energy, the second and third elements each respectively disposed perpendicularly to one of the opposed surfaces of the first element, the first, second, and third elements cooperating such that a first portion of the incident light energy passes therethrough along a first ray path axis which is coincident with the axis of the incident light energy and second and third portions of the incident light energy are reflected along respective second and third opposed ray path axes which are each perpendicular to the axis of incident light energy;
the optics module further comprising:
a housing;
a support base mounted to the housing, the support base having a longitudinal axis extending parallel to the second and third ray path axes;
first support plate mounted atop the support base and adjustably moveable in a direction parallel to the longitudinal axis of the support base;
second support plate mounted atop the first support plate and adjustably moveable in a direction perpendicular to the longitudinal axis of the support base;
a vidicon mounting plate extending upward from and perpendicular to the second support plate; and
a yoke assembly for receiving each vidicon tube, the yoke assemblies being mounted on the vidicon mounting plate such that each yoke assembly is adjustably moveable in three mutually orthogonal directions with respect to the vidicon mounting plate.

4,302,770
COLOR RASTER SCANNER FOR RECORDING CARTOGRAPHIC DATA
Richard G. Hubbard, Jr., Manchester, and Douglas P. Modeen, Granby, both of Conn., assignors to United Technologies Corporation, Hartford, Conn.
Filed Apr. 30, 1980, Ser. No. 145,101
Int. Cl.³ H04N *1/46, 9/10*
U.S. Cl. 358—75 **3 Claims**

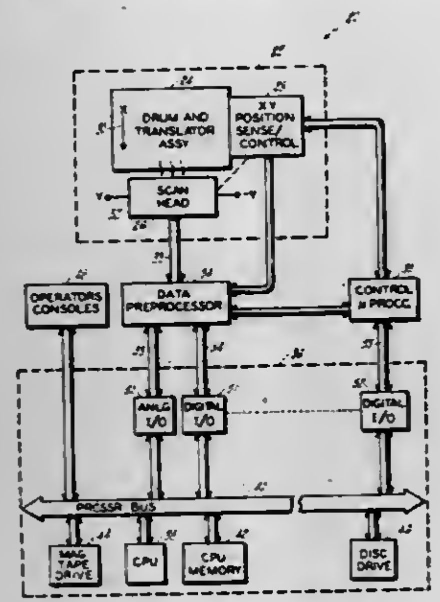

1. A color raster scanner for digitally recording multicolor cartographic data from a cartographic source chart of the type which includes resolute graphic symbology and large area symbology thereon each having multiple different colors with the resolute symbology having solid colors and the large area symbology having alternately solid colors or screen colors, comprising:
mounting means, for receiving a source chart to be scanned and for moving the source chart in each of two orthogonal coordinates with respect to an optical sensing means;
optical sensing means, including therein means for illuminating successive small areas of the source chart and for receiving the reflected image from each successively in each of two coordinate planes, said optical sensing means having two apertures including a resolution aperture having a diameter no larger than the smallest graphic symbology to be sensed from the chart and including a screen aperture having a diameter which is much greater than that of the resolution aperture, said resolution aperture and screen aperture having concentric fields of view whereby said screen aperture field of view encompasses an area of the source chart which is larger than the resolution aperture and smaller than the area illuminated; and
signal conversion means, responsive to the reflected images from each of said resolution aperture and said screen aperture for providing in response thereto signals indicative of the color type and number of samples of a common color type received from each of said apertures, said means providing said signal outputs in a digital word format.

4,302,771
WIRE BROADCASTING SYSTEM WITH SUBSCRIBER CONTROLLED SWITCHED PROGRAM SELECTION
Eric J. Gargini, West Drayton, England, assignor to Communications Patents Limited, London, England
Filed Jul. 23, 1980, Ser. No. 171,315
Claims priority, application United Kingdom, Aug. 22, 1979, 29283/79
Int. Cl.³ H04N *7/10*
U.S. Cl. 358—86 **8 Claims**

1. A wired broadcasting system comprising a central station at which a plurality of television signals are made available, a plurality of exchanges connected to the central station by a plurality of trunk cables on which the television signals are broadcast, and a plurality of subscriber units each connected to an exchange, each subscriber unit being provided with means for controlling a respective selector at the exchange to select a desired one of the programme signals for transmission to that subscriber, characterised in that each trunk cable carries a

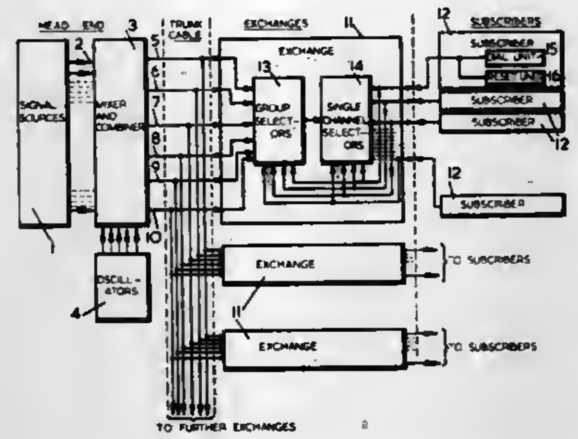

plurality of frequency division multiplexed signals and each selector comprises a first selecting means for selecting the signals on one said trunk cable and a second selecting means for selecting one of the signals on said one trunk cable for transmission to the respective subscriber unit.

4,302,772
DEVICE FOR THE TELEVISUAL INSPECTION OF THE INNER SURFACE OF A CLOSED CYLINDRICAL VESSEL
Georges Gillot, Wasquehal, France, assignor to Framatome, Wasquehal, France
Filed Mar. 28, 1980, Ser. No. 135,853
Claims priority, application France, Mar. 30, 1979, 79 08005
Int. Cl.³ H04N *7/18*
U.S. Cl. 358—100 **6 Claims**

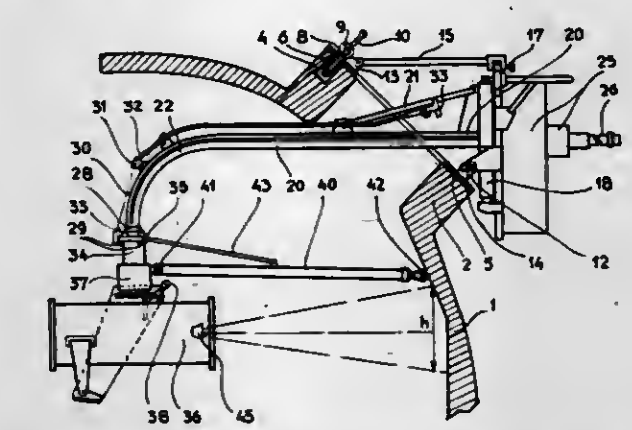

1. A device for the televisual inspection of the inner surface of a closed cylindrical vessel having a vertical axis and having an access hole in its upper part, said device comprising:
television camera;
at least one floodlight for lighting the area to be inspected;
a flexible tube;
means suspending said camera and said floodlight from one of the ends of said flexible tube;
a rigid tubular guide for extending into the vessel through the access hole, and having a terminal portion which is, in use, arranged vertically within the vessel for guiding and orientation of said flexible tube over its path from the outside into the vessel;
drive means for causing rotation of said flexible tube about its axis and situated in use outside the vessel;
means for holding said tube and said camera against axial movement, said means being releasable for permitting vertical displacement of said camera and being located in use outside the vessel;
means for indicating the angular position and vertical position of said camera; and
centering means situated above said camera and free to rotate and for bearing on the wall of the vessel;
wherein said flexible tube is torsionally rigid so that it can accurately transmit to said camera rotary movements from said drive means.

4,302,773
DEFECT INSPECTION SYSTEM
Hajime Yoshida, Tokyo, Japan, assignor to Hajime Industries Ltd., Tokyo, Japan
Filed Feb. 14, 1980, Ser. No. 121,516
Claims priority, application Japan, Feb. 20, 1979, 54-18868
Int. Cl.³ H04N *7/18*
U.S. Cl. 358—106 **6 Claims**

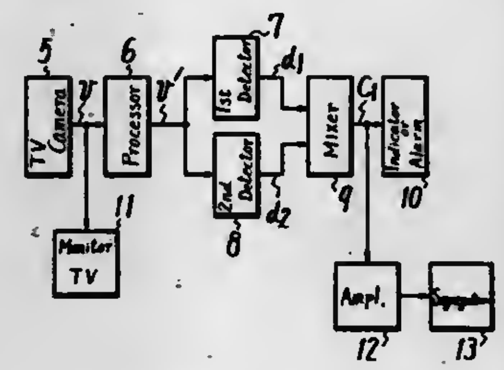

1. A defect inspection system comprising:
(a) pick-up means for sensing an object to be inspected and to produce a video signal thereof;
(b) a plurality of detecting means each having respective predetermined detecting sensitivities connected in parallel to said pick-up means to simultaneously receive the video signals therefrom said, detecting sensitivities of said plurality of detecting means being so selected that all or some of said plurality of detecting means produce signals in response to a the rate of level change of said video signal with respect to time; and
(c) means connected simultaneously to outputs of each of said plurality of detecting means for producing a defect detection signal when at least some of said plurality of detecting means produce a signal.

4,302,774
AMPLITUDE COMPRESSION AND FREQUENCY COMPENSATION SYSTEM
Ake W. Alm, San Pedro, Calif., assignor to Hughes Aircraft Company, Culver City, Calif.
Filed May 3, 1979, Ser. No. 35,769
Int. Cl.³ H04N *5/33*
U.S. Cl. 358—113 **5 Claims**

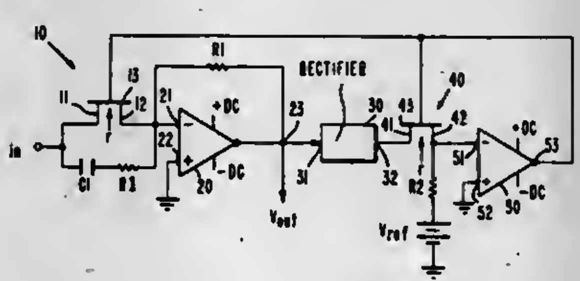

1. A system for frequency compensation and amplitude compression of electrical signals comprising:
at least two operational amplifiers, the output of the second operational amplifier being coupled to an input of the first operational amplifier and a reference source being coupled to an input of said second operational amplifier;
a separate field effect transistor in an input path of each amplifier having a source and drain in said input path of each of said operational amplifiers and a gate coupled to the output of said second operational amplifier;
a rectifier connected between the output of said first amplifier and the source of the field effect transistor in the input path of said second operational amplifier; and
filter means connected to the input of one of said amplifiers for changing the relative levels of predetermined frequency components of said signals.

4,302,775
DIGITAL VIDEO COMPRESSION SYSTEM AND METHODS UTILIZING SCENE ADAPTIVE CODING WITH RATE BUFFER FEEDBACK
Robert D. Widergren, Saratoga; Wen-Hsiung Chen, Sunnyvale; Stanley C. Fralick, Saratoga, and Andrew G. Tescher, Claremont, all of Calif., assignors to Compression Labs, Inc., San Jose, Calif.
Filed Dec. 15, 1978, Ser. No. 969,991
Int. Cl.³ H04N *7/12; 9/32;* **G06F** *15/20;* **G08C** *9/00*
U.S. Cl. 358—136 **7 Claims**

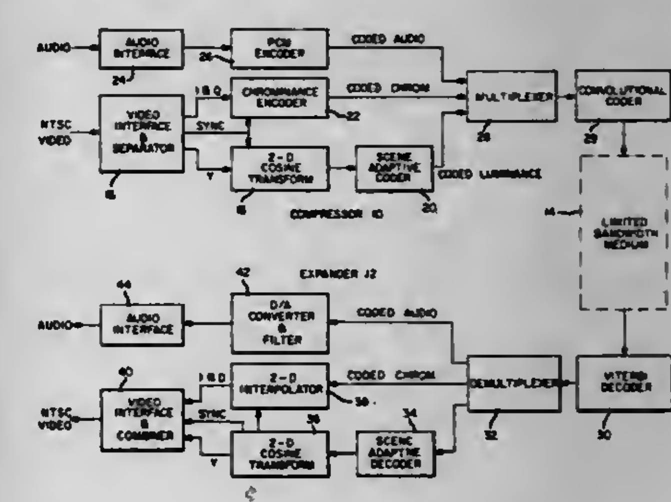

1. A method for one pass compressing, transferring through a medium and expanding, in real time digitalized television video frames, the compression steps comprising:
(a) dividing each digitalized frame into a predetermined matrix of sub-frames;
(b) performing a predetermined spatial domain to transform domain transformation in two dimensions of the picture elements of each sub-frame to provide transform coefficients thereof;
(c) storing said transform coefficients in a memory at a rate related to the video frame rate;
(d) normalizing said transform coefficients by operation of a normalization factor having a predetermined compression ratio component to perform threshold coding of said transform coefficients and an adaptive rate buffer capacity control feedback component, to provide compression and to provide normalized transform coefficients compatible with a predetermined data coding scheme including Huffman coding of amplitude coefficients and run length coding of zero amplitude coefficients following coefficient normalization;
(e) coding said normalized transform coefficients in accordance with said predetermined data coding scheme for further compression and transfer through said limited bandwidth medium;
(f) loading said coded coefficients into an encode rate first in, first out buffer memory asynchronously at a high data transfer rate;
(g) unloading said coded coefficients from said encode rate buffer memory at a slow data transfer rate capable of passing through said limited bandwidth medium; and
(h) adaptively determining said rate buffer capacity control feedback component in relation to the instantaneous data content of said rate buffer memory in relation to its capacity, to control at said normalization step the absolute

quantity of data resulting therefrom so that said rate buffer memory is never completely emptied and never completely filled, and combining said feedback component with said compression ratio component to provide said normalization factor; and,

the expansion steps comprising:

(i) loading said coded coefficients into a decode rate first in, first out buffer memory at said slow synchronous data transfer rate;

(j) unloading said coded coefficients from said decode rate buffer memory asynchronously at a high data transfer rate;

(k) decoding said coded coefficients in accordance with an inverse of said predetermined data coding scheme;

(l) inversely normalizing said decoded transform coefficients by operation of an inverse normalization factor having a predetermined expansion ratio component and an adaptive decode rate buffer capacity control feed forward component, to provide expansion of said transform coefficients;

(m) adaptively determining said rate buffer capacity control feed forward component in relation to said instantaneous data content of said decode rate buffer memory in further relation to its capacity so as to control at said inverse normalization step the absolute quantity of data resulting therefrom and thus the rate at which said coded coefficients are unloaded asynchronously from said decode rate buffer memory so that it is never completely emptied and never completely filled, and combining said feed forward component with said expansion ratio component to provide said inverse normalization factor;

(n) performing the inverse of said predetermined transformation of said expanded transform coefficients to provide reconstituted picture elements of each sub-frame;

(o) assembling said sub-frames into said predetermined matrix and putting them out at said video frame rate so as to reconstruct digitalized picture frames closely approximating the corresponding original video frames.

4,302,776
DIGITAL STILL PICTURE STORAGE SYSTEM WITH SIZE CHANGE FACILITY

Richard J. Taylor, London, England, and Phillip P. Bennett, Foster City, Calif., assignors to Micro Consultants Limited, Berkshire, England

Filed Mar. 10, 1980, Ser. No. 128,789

Claims priority, application United Kingdom, Mar. 22, 1979, 10113/79; Nov. 9, 1979, 38847/79

Int. Cl.^{3} H04N *5/76, 5/92*

U.S. Cl. 358—160 34 Claims

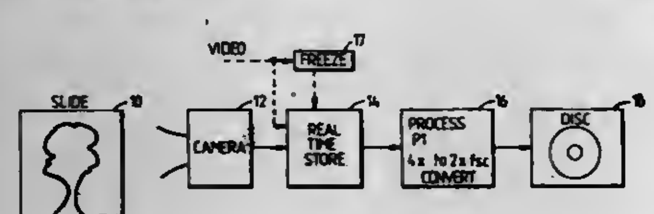

1. A digital still picture storage system for storing a plurality of video frames comprising first digital frame storage means adapted to capture a frame of video information in digital form in real time, non-real time storage means adapted to receive and store digital data captured by said frame storage means at a slower rate than that received by said frame storage means, and picture processor means adapted to process data in the non-real time domain so as to manipulate the size of the still picture when processed thereby relative to normal frame size.

4,302,777
FLARE COMPENSATION CIRCUIT FOR TELEVISION

Rudolf Kemner; Bernardus G. J. Kuilman, and Hilbrand J. Smit, all of Eindhoven, Netherlands, assignors to U.S. Philips Corporation, New York, N.Y.

Filed May 15, 1980, Ser. No. 150,268

Claims priority, application Netherlands, Jun. 7, 1979, 7904471

Int. Cl.^{3} H04N *5/14*

U.S. Cl. 358—160 5 Claims

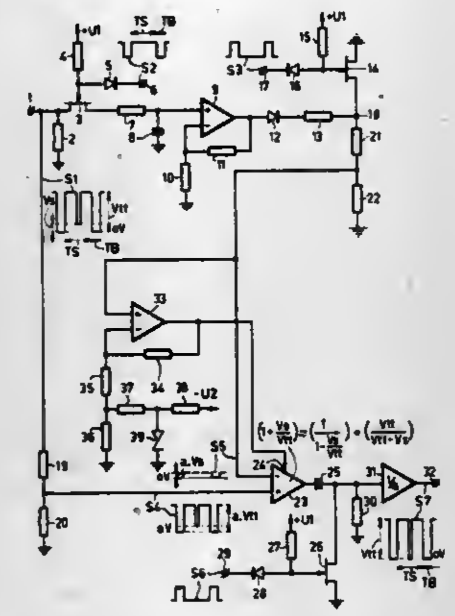

1. A flare compensation circuit for television, the circuit comprising a signal integration circuit having an input for receiving a picture signal affected by flare or scattered light and an output for supplying a compensation signal derived therefrom, also comprising a signal difference amplifier circuit having a first input for receiving the picture signal and a second input for receiving the compensation signal, characterized in that the signal difference amplifier circuit comprises a controllable amplifier a control input of which is connected to the output of a second amplifier circuit having an input for receiving the said compensation signal, the gain factor of the controllable amplifier being substantially proportional to the quotient of the peak-peak value, which has been fixed at a predetermined value, of the picture signal affected by the flare, and of the difference value of this peak-peak value and the value of the compensation signal.

4,302,778
AFT-WIDE AUTOMATIC FREQUENCY CONTROL SYSTEM AND METHOD

Akio Tanaka, San Francisco, Calif., assignor to Zenith Radio Corporation, Glenview, Ill.

Filed Jun. 30, 1980, Ser. No. 164,716

Int. Cl.^{3} H04N *5/50*

U.S. Cl. 358—195.1 16 Claims

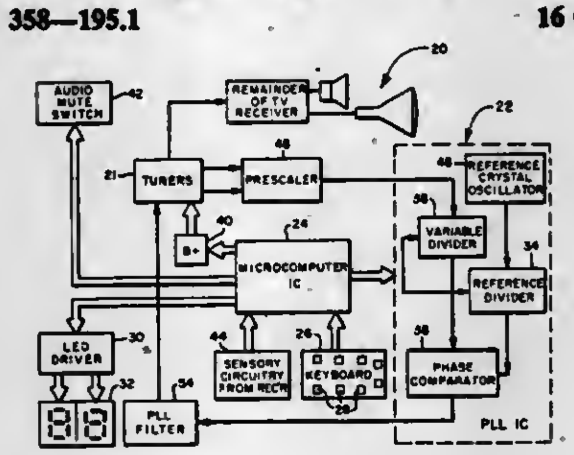

1. A wide-band automatic fine tuning system for tuning a television receiver to the carrier frequency of a received television signal having at least a picture carrier component and a synchronizing signal component, said television receiver including radio frequency receiving means, variable frequency tunable means coupled to said receiving means for receiving said radio frequency signal, said tunable means including a voltage control oscillator for generating an intermediate frequency signal when combined with said received television signal, intermediate frequency signal amplification means coupled to said tunable means for amplifying said intermediate frequency signal, automatic frequency control means including discriminator means connected to an output of said intermediate frequency amplifier means for generating a plurality of first output signals characteristic of said received television signal and synchronizing signal component sensing means for providing a predetermined plurality of second output signals when said synchronizing components are in proper relationship with said picture carrier component of said received television signal, said automatic fine tuning system comprising:

signal processing means for receiving said automatic frequency control first output signals and said predetermined second output signals from said synchronization signal component sensing means and for comparing said signals to predetermined automatic frequency control tuning curve characteristics representing a nominal intermediate frequency of said picture carrier component and a predetermined synchronization condition, respectively, and for generating a plurality of third output signals in response to said comparisons;

phase lock loop means coupled to the voltage controlled oscillator of said tunable means for comparing the frequency of said voltage controlled oscillator with a standard frequency signal source by means of a phase detector and for generating a first control signal for controlling the frequency of said voltage controlled oscillator; and

control means coupled to said signal processing means for generating second control signals in response to said third output signals, said control means being coupled to said tunable means and to said phase lock loop means for providing said second control signals to said tunable means and said phase lock loop means in automatically fine tuning said television receiver to said received television signal.

4,302,779
METHODS OF REDUCING BLOOMING IN THE DRIVE OF CHARGE-COUPLED IMAGE SENSORS

Hidehiko Inoue, Tokyo, Japan, assignor to Nippon Electric Co., Ltd., Tokyo, Japan

Filed Jun. 2, 1980, Ser. No. 155,300

Claims priority, application Japan, Jun. 6, 1979, 54-70984

Int. Cl.^{3} H04N *3/14, 5/30*

U.S. Cl. 358—213 12 Claims

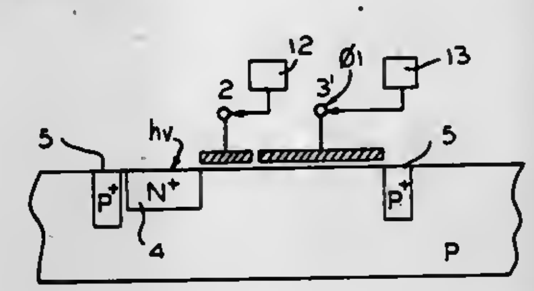

1. A method for driving a charge transfer imaging device comprising a plurality of photosensitive elements arranged in at least a row, said photosensitive elements accumulating charges in response to incident light falling on them, transfer register means disposed in parallel to said row of photosensitive elements, and transfer gate electrode means for supplying said transfer register means with said charges accumulated in said photosensitive elements, means responsive to the end of a predetermined time period which is part of the charge-accumulating period for applying a first signal to said transfer gate electrode to supply said transfer register means with at least a part of the charges accumulated in said photosensitive elements in said predetermined time period, means effective after the end of said first signal for applying a second signal to said transfer register means to transfer along said transfer channel said at least a part of charges supplied to said transfer register means, means effective after said charge-accumulating period has elapsed for applying a third signal to said transfer gate electrode to supply said transfer register means with information charges accumulated in said photosensitive elements and including charges accumulated in the period subsequent to said predetermined time period, and means effective after said third signal disappears for applying a fourth signal to said transfer register means to transfer along said transfer register means said information charges to produce an output electrical signal according to said information charges.

7. An integrated, photoactivated, semiconductor signal charge accumulation and transfer system comprising a plurality of photosensitive elements for accumulating charges divided into at least two parts, a plurality of charge transfer means associated with said photosensitive elements, means responsive to a first part of the divided charge for drawing out said first part of said charges via a charge transfer means, as a non-information signal, means for drawing out a second and following part of the divided charges as an information signal, means for controlling said drawing out of said second charge parts responsive to transfer pulse signals and shift pulse signals, said information signal said part of said charges being stored even in the presence of intense light in the photosensitive elements for only a short period of time between the ending time of the first pulse signal and the beginning time of the transfer pulse signal.

4,302,780
PHOTOMETRIC SYSTEM

Masafumi Yamazaki, Okaya; Shuichi Takayama, Hachioji; Kosaku Tsuboshima, Hachioji; Yoshio Nakajima, Hachioji, and Teruo Iwasawa, Mitaka, all of Japan, assignors to Olympus Optical Company Limited, Tokyo, Japan

Filed Oct. 31, 1979, Ser. No. 90,082

Claims priority, application Japan, Nov. 1, 1978, 53-133760

Int. Cl.^{3} H04N *5/26;* G03B *7/08*

U.S. Cl. 358—228 8 Claims

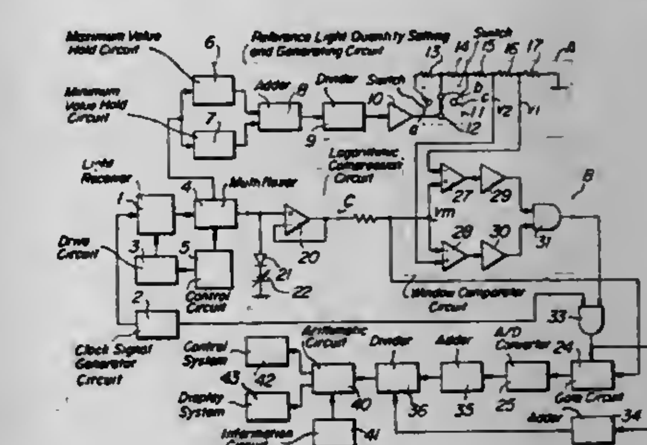

1. A photometric method comprising the steps of: forming an image focussed by a photo-optical system on a light receiver consisting of a plurality of charge transfer elements arranged in a picture element array; selectively deriving luminance signals of amplitude having a value within a range of a predetermined exposure value from luminance signals provided by the light receiver around a reference exposure value corresponding to a mean value between a maximum value and a minimum value of the amplitude of the luminance signals; and seeking a mean value of the selected luminance signals to photometrically measure the light of automatically selected portions on the average.

4,302,781

FACSIMILE SYSTEM

Takatoshi Ikeda; Shuichi Hirano, both of Yokohama, and Yasuyuki Kozima, Hitachi, all of Japan, assignors to Hitachi, Ltd., Tokyo, Japan

Filed Apr. 3, 1979, Ser. No. 26,603

Claims priority, application Japan, Apr. 3, 1978, 53-38136

Int. Cl.³ H04N *7/12*

U.S. Cl. 358—288 **3 Claims**

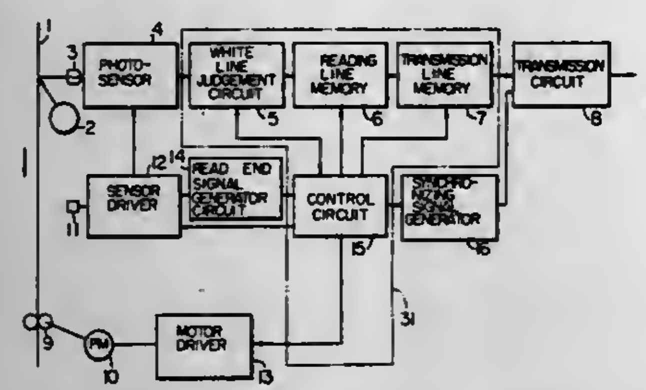

1. A skip type analog facsimile system comprising:

means for feeding an original document having lines of data, a light source illuminating said original document, a photo-sensor scanning said document on a line-by-line basis for converting image information for every one line in the original document fed by said feeding means into an electrical signal;

a white line judgement circuit connected to said photo-sensor for judging whether the image information representing each one line read out by said photo-sensor is a white line containing no data or a black line containing data;

a reading line memory connected to said white line judgement circuit for temporarily storing the image information passing through said white line judgment circuit;

a transmitting circuit for sending modulated image information on a transmission line;

a transmission line memory for reading out the image information stored in said reading line memory as a series of image information transmissions each having a predetermined period corresponding to a line of image information and for transmitting the image information through said transmitting circuit at the speed corresponding to the transmitting speed of the transmission line;

a detection circuit for detecting a change in the brightness of said light source illuminating said original document and for controlling the speed of scanning by said photo-sensor in accordance with the detected result;

a transmitter control circuit responsive to said white line judgment circuit for indicating in selected image information transmissions a skip indication designating the presence of at least one white line and the number of consecutive white lines read out of said reading line memory during said predetermined period in such a way that the white line image information is synchronized with the black line image information in the transmission;

a receiving circuit for receiving and demodulating the image information transmitted on said transmission line;

a receiving line memory for temporarily storing the demodulated image information;

a recording circuit for recording image information on recording paper;

a recording line memory for reading out the image information stored in said receiving line memory to said recording circuit for making a record thereof on said recording paper;

means for feeding said recording paper at a controlled speed; and

a receiver control circuit comprising a controlling circuit for synchronizing said receiving line memory, said recording line memory, said recording circuit and said means for feeding the recording paper in accordance with the received image information including said skip information and the number of the white lines indicated in said skip information.

4,302,782

REPRODUCTION SCANNING SYSTEM HAVING INTERMEDIATE STORAGE BETWEEN INPUT AND OUTPUT SCANNING STATIONS

William F. Gunning, Los Altos, Calif., and Pierre A. Lavalle, Penfield, N.Y., assignors to Xerox Corporation, Stamford, Conn.

Continuation-in-part of Ser. No. 776,321, Mar. 10, 1977, abandoned. This application Apr. 5, 1978, Ser. No. 893,658

Int. Cl.³ H04N *1/22*

U.S. Cl. 358—296 **25 Claims**

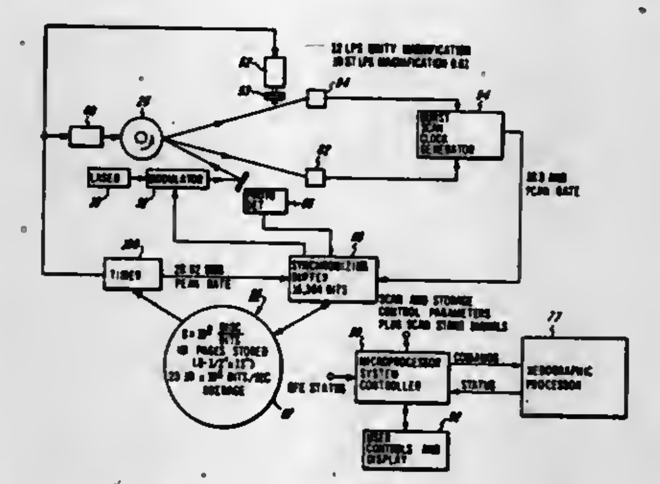

1. A scanning system for scanning information formed on an information containing original supported on a platen at a first location and reproducing the information on a medium at a second location comprising:

means for scanning said original and producing electrical signals corresponding to the information contained on said original, said original being scanned as a plurality of scan lines,

means for loading said electrical signals into a buffer memory in a first mode of operation,

means for unloading said electrical signals from said buffer memory into memory means in said first mode of operation,

means for loading said electrical signals from said memory means into said buffer memory in a second mode of operation, and

means for unloading said electrical signals in said buffer memory in said second mode of operation and coupling said electrical signals to a modulator, said modulator being adapted to modulate a light beam incident thereon in response to the electrical signals coupled thereto, said modulated light beam being scanned across said medium on a line to line basis in spatial correspondence with the scanning of said input original whereby said information is reproduced thereon.

4,302,783

METHOD AND APPARATUS FOR RECORDING AND REPRODUCING A PLURALITY OF BITS ON A MAGNETIC TAPE

Soichiro Mima; Hiroshi Matsushima; Yasuharu Shimeki, and Nobuyoshi Kihara, all of No. 1006, Oaza Kadoma, Kadoma City, Osaka, Japan

Continuation of Ser. No. 911,260, May 31, 1978, abandoned. This application Dec. 5, 1979, Ser. No. 100,344

Claims priority, application Japan, Jun. 1, 1977, 52-65010

Int. Cl.³ G11B *5/02*

U.S. Cl. 360—47 **10 Claims**

1. A method of recording and reproducing a plurality of bits of a digital signal on a plurality of tracks positioned in parallel on a magnetic medium arranged to slide on at least one multi head which includes a plurality of like heads transversely aligned with respect to the direction of the movement of said magnetic medium, each of said heads being spaced from an adjacent head by less than dust speck size, each head having a head gap which defines the width of each track, comprising the steps of:

simultaneously recording with common polarity each of said bits via two heads of said multi head in such a manner that each bit is recorded on two information tracks, said two information tracks for each bit being positioned at opposite sides with respect to the geometrical center of two of said heads, said reference signal being utilized for producing a synchronous signal with which said plurality of bits are reproduced in synchronization, said two information tracks for each bit being so spaced from each other by more than a predetermined distance corresponding to said dust speck size to eliminate drop out due to a possiblity of a dust speck occurring simultaneously on the same information tracks carrying the same bit signal, said two reference tracks also being spaced from each other by more than said predetermined distance to eliminate drop out due to a possibility of a dust speck occurring simultaneously on the reference tracks carrying the same reference signal, said two information tracks for each bit being spaced from said geometric center of said reference tracks by the distances A and B satisfying the relationship $\frac{1}{3}B<A<3B$ to reduce skew, some of said plurality of tracks, which are located in the vicinity of said geometrical center, being arranged such that said two tracks, carrying the same bit signal, either information bit or reference bit, are spaced apart by a constant distance, and having relationship therebetween such that a first bit signal is recorded on n^{th} and $(n+a)^{th}$ tracks, a second bit signal is recorded on $(n-1)^{th}$ and $(n+a-1)^{th}$ tracks, a third bit signal is recorded on $(n-2)^{th}$ and $(n+a-2)^{th}$ tracks, and so on, wherein "n" is the order of a track adjacent to said geometrical center, counted from one end of said magnetic medium, and "a" is a positive integer;

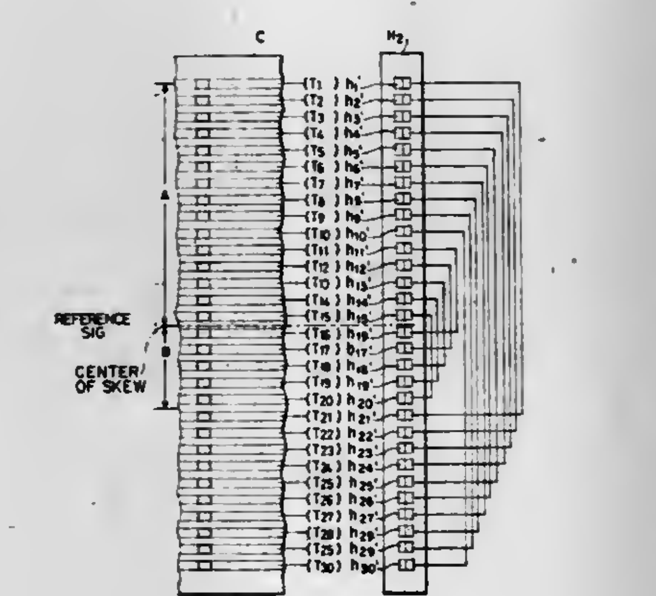

reading each bit recorded on each track via each of said heads so that each of said heads produces an a.c. signal having a variable magnitude and phase characteristic;

adding vectorally said a.c. signals from said two heads which correspond to said two reference tracks; and

adding vectorally said a.c. signals from said two heads which correspond to said two information tracks for each of said plurality of bits.

4,302,784

METHOD AND APPARATUS FOR CONTROLLING TAPE RECORDER

Thomas J. Mussatt, Riverton, Ill., assignor to Sangamo Weston, Inc., Atlanta, Ga.

Division of Ser. No. 897,136, Apr. 17, 1978, Pat. No. 4,214,284. This application Mar. 7, 1980, Ser. No. 127,937

Claims priority, application United Kingdom, Apr. 18, 1977, 16063/77

Int. Cl.³ G11B *15/48*

U.S. Cl. 360—71 **3 Claims**

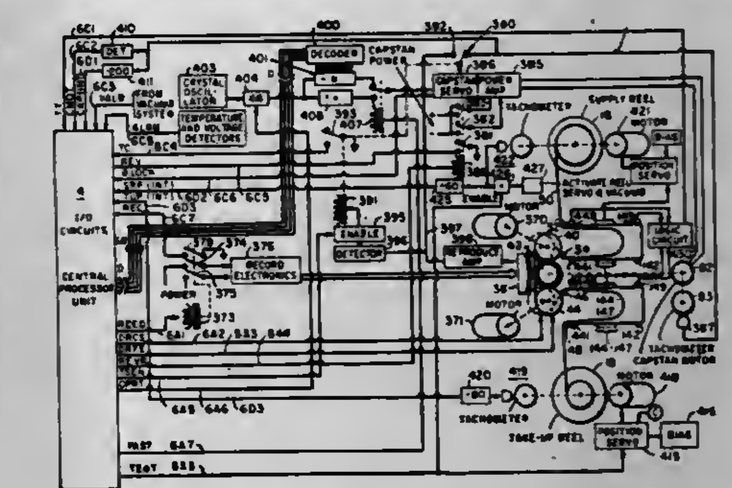

1. In combination with tape recorder means including source and take up reels, transducer means and transport means including a capstan and a motor for driving said capstan for transporting tape from one of said reels in predetermined relation with said transducer means onto the other of said reels, apparatus comprising: first sensor means for generating output signals representative of angular displacement of said capstan motor; first and second reel motors for driving said source and take up reels respectively; second and third sensor means for generating signals representative of the angular displacement of the said first and second reel motors respectively; data processor circuit means responsive to said output signals of said first, second and third sensor means for generating signals representative of the ratio of the output signals of said first sensor means to the output signals of one of said second and third sensor means associated with the reel being emptied, said ratio being independent of the speed of said motors and defining an End of Tape position for said source reel and a Beginning of Tape position for the said take up reel.

4,302,785

METHOD AND APPARATUS FOR CONTROLLING TAPE RECORDER

Thomas J. Mussatt, Riverton, Ill., assignor to Sangamo Weston, Inc., Atlanta, Ga.

Division of Ser. No. 897,136, Apr. 17, 1978, Pat. No. 4,214,284. This application Mar. 21, 1980, Ser. No. 132,380

Claims priority, application United Kingdom, Apr. 18, 1977, 16063/77

Int. Cl.³ G11B *15/48*

U.S. Cl. 360—72.1 **4 Claims**

1. Improvements in apparatus for controlling the operation of a tape recorder having first and second reels for storing tape, transducer means and transport means for transporting tape from one of said reels in predetermined relation with said transducer means onto the other of said reels, said transport means comprising a capstan, capstan drive means for driving said capstan responsive to speed select signals and further responsive to a feedback signal representative of the speed of said capstan motor for generating a phase lock signal when the speed of the capstan corresponds to the speed setting determined by said speed select signals; said improvement comprising: first and second drums, said tape being trained about said drums in major wrapping engagement; positioning means for moving said drums between a read position in which said transducer is in operative relation with the tape span supported

between said drums, an idle position in which said drums are disengaged from said capstan, and a transport position in which said drums are in driving engagement with said capstan and said tape span is not in operative relation with said transducer; first circuit means including signal storage means for storing first speed select signals representative of a desired tape operating speed selected by an operator and programmed speed select signals representative of a desired predetermined, programmed speed for said capstan, said programmed speed being slower than said operating speed; control circuit means

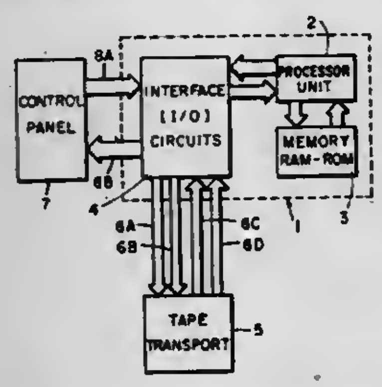

responsive to said first speed select signals when said capstan is stopped for first transmitting said programmed speed select signals to said capstan drive means for driving said capstan; detection circuit means for detecting said phase lock signal when said capstan is operating at said programmed speed while said drums are in said idle position; said control circuit being responsive to said phase lock signal for energizing said positioning means to place said drums in driving engagement with said capstan; said control circuit means then transmitting said second speed select signals to drive said capstan drive means at the operator selected speed.

4,302,786

APPARATUS FOR DETECTING THE STOP OF A MAGNETIC TAPE TRAVELING IN A MAGNETIC RECORDING AND REPRODUCING DEVICE

Eiichi Takeuchi, Iruma, Japan, assignor to Casio Computer Co., Ltd. and Olympus Optical Co., Ltd., both of Tokyo, Japan

Filed Feb. 14, 1979, Ser. No. 12,117

Claims priority, application Japan, Feb. 24, 1978, 53-20620

Int. Cl.³ G11B *15/48*

U.S. Cl. 360—74.2 **7 Claims**

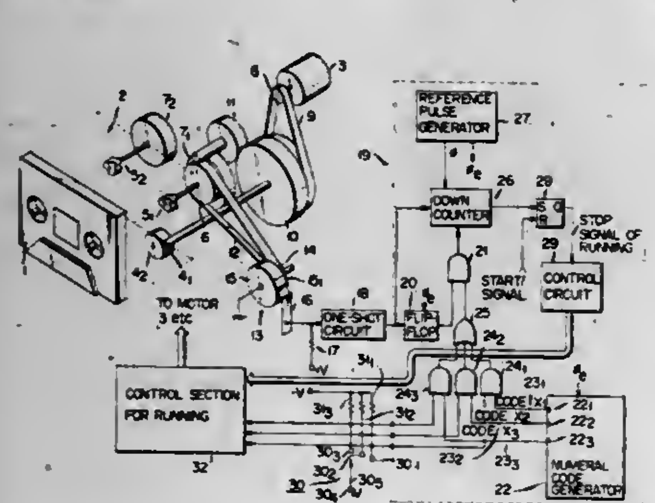

1. An apparatus for detecting the stop of a magnetic tape traveling in a magnetic recording and reproducing device which includes a rotary drive means for causing a magnetic tape to travel in the recording and reproducing device at a given speed selected from a plurality of speeds, each speed corresponding to at least one of a plurality of functional modes of the recording and reproducing device, the tape stop detecting apparatus comprising:

first pulse generating means coupled to said tape drive means for generating a given number of pulses per rotation of the rotary drive means;

reference pulse generating means for producing reference pulses having a reference frequency;

time measuring means coupled to said first pulse generating means and to said reference pulse generating means for measuring a time interval between the respective pulses generated by said first pulse generating means by counting a number of reference pulses which are generated between respective successive pulses of said first pulse generating means in accordance with the traveling speed of the magnetic tape;

functional mode selecting means for selecting one of said plurality of functional modes of the magnetic recording and reproducing device;

means coupled to said functional mode selecting means for presetting a length of time required to detect the stop of the magnetic tape running at a speed corresponding to a selected functional mode; and

detection signal generating means coupled to said time measuring means for detecting that said time interval between respective successive pulses issued from said first pulse generating means, measured by counting of the reference pulses by said time measuring means, exceeds said preset tape stop detection time which corresponds to the selected functional mode, and for then generating a detection signal indicating that the magnetic tape has stopped traveling.

4,302,787

TAPE CASSETTE AND VIDEO RECORDING AND REPRODUCING SYSTEM USING THE SAME

Takashi Itani, Yokohama, Japan, assignor to Canon Kabushiki Kaisha, Tokyo, Japan

Filed Nov. 5, 1979, Ser. No. 91,171

Claims priority, application Japan, Nov. 8, 1978, 53-137722

Int. Cl.³ G11B *5/52, 23/08*

U.S. Cl. 360—85 **8 Claims**

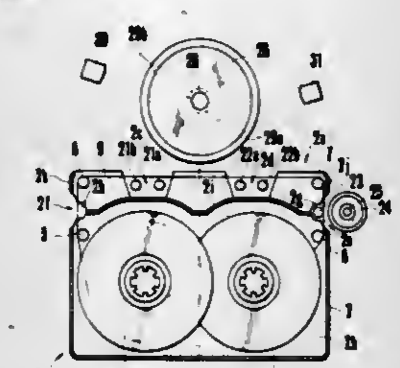

1. A tape cassette containing therein a video recording tape and adapted for use with a video recording apparatus which comprises cylindrical means for guiding a portion of the tape at the outside of said cassette for video recording, rotatable recording means disposed within said cylindrical means for recording video signals on a portion of the tape surrounded on the cylindrical means and movable tape loading means for extracting a portion of the tape from said cassette and for bringing the extracted portion of the tape into contact around said cylindrical means, said tape cassette comprising:

(a) a housing for containing the tape therein, said housing having an upper wall and a bottom wall opposed to each other, and a front wall, wherein said front wall is provided with an aperture for tape extraction to allow for extraction of a portion of the tape from said housing by said tape loading means in said video recording apparatus, and said upper and bottom walls are provided with cutouts contiguous to said aperture for allowing free entrance of said tape loading means into said housing even when said cassette is in upside down condition;

(b) a pair of rotatable reel means disposed in substantially juxtaposed relation with each other within said housing for supporting the tape; and

(c) a plurality of guide means disposed within said housing to guide a portion of the tape so as to assume a position along said tape extraction aperture of the front wall within said housing;

wherein said cutouts of said upper and bottom walls for entrance of said tape loading means are formed to allow for entrance of said tape loading means in said video recording apparatus in the rear of a portion of the tape positioned along said tape extraction aperture of the front wall even when the cassette is in upside down condition; and

said video recording apparatus further comprising:

driving means arranged for driving the tape within the housing of said cassette and movable pressure means for pressing the tape to said driving means for the tape driving;

wherein said housing of the tape cassette further has a pair of side walls opposed to each other, in which said side walls are provided with pressure means entrance apertures for allowing entrance of a portion of said pressure means into the interior of the housing even when the cassette is in upside down condition, and wherein said upper and bottom walls are provided with cutouts for allowing entrance of said driving means arranged so that even when the cassette is in upside down condition, said driving means being allowed to freely enter the interior of the housing at the rear of a portion of the tape which is positioned along said pressure means entrance aperture.

4,302,788

REVERSIBLE CASSETTE-TYPE RECORDING AND/OR REPRODUCING APPARATUS

Yoshinori Yamamoto, Tokyo, Japan, assignor to Sony Corporation, Tokyo, Japan

Filed May 8, 1979, Ser. No. 37,106

Claims priority, application Japan, May 8, 1978, 53-61345[U]

Int. Cl.³ G11B *15/02, 5/55, 5/56, 21/08*

U.S. Cl. 360—96.6 **5 Claims**

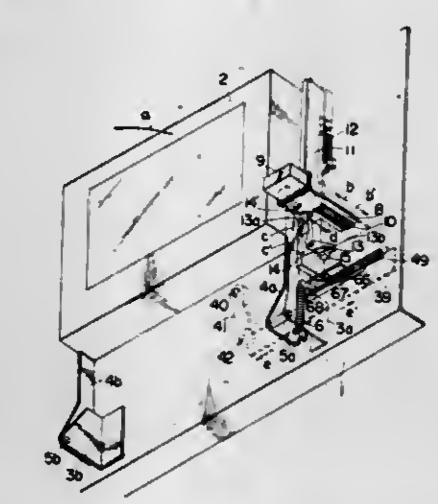

1. A reversible cassette-type recording and/or reproducing apparatus comprising:

cassette covering means movable between an operative position and an ejecting position;

magnetic head means;

inverting means for effecting inverting movement of said head means between a normal condition and a reverse condition;

drive means for driving said inverting means;

a first operation member movable in a first direction from an inoperative position to an operative position for effecting movement of said cassette covering means to said ejecting position;

a second operating member movable by said drive means between a first position, corresponding to the normal condition of said head means, and a second position, corresponding to the reverse condition of said head means, in a second direction substantially at a right angle to said first direction; and

cooperatively engageable stopper means on said first and second operating members, respectively, for permitting movement of said first operating member from said inoperative to said operative position when said second operating member is located at said first position, and for preventing said movement of the first operating member to said operative position by mutual engagement of said stopper means when said second operating member is moved to said second position by said drive means in causing an inverting movement of said head means;

said drive means including a drive link coupled to said second operating member for moving the latter, a rotary cam in contact with said drive link to urge the latter to move said second operating member, a partly-toothed gear having a toothed portion and a toothless position on its circumference and coupled to rotate with said rotary cam, a drive gear selectively engageable with the toothed portion of said partly toothed gear, a rotatable member for rotating said drive gear, and selectively actuable trigger means for contacting said drive gear with the toothed portion of said partly toothed gear so that, in response to actuation of said trigger means, said second operating member is moved between its first and second position.

4,302,789

DISC MEMORY HEAD ARM LIFT MECHANISM

Leroy A. Vos, St. Paul, Minn., assignor to Magnetic Peripherals Inc., Minneapolis, Minn.

Filed Feb. 8, 1980, Ser. No. 119,685

Int. Cl.³ G11B *21/22, 5/54*

U.S. Cl. 360—105 **9 Claims**

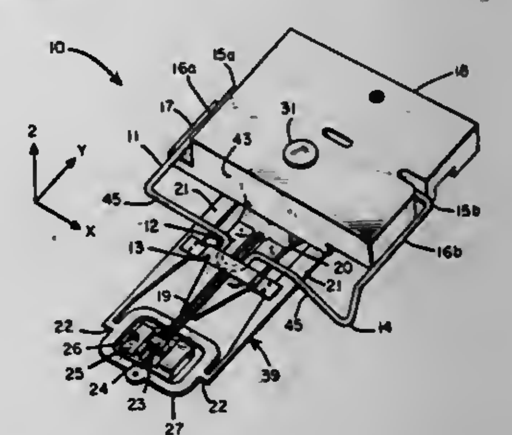

1. A head arm of the type to be attached to the carriage of a disc memory at one end, and supporting a transducing head pad having a flying surface at the other end thereof, comprising in combination

(a) a rigid body adapted to mate with the disc memory carriage, and having an edge;

(b) a pad support having a pair of relatively long dimensions and a relatively thin dimension transverse to the long dimensions, said support resiliently flexible about axes parallel to the long dimensions and relatively resistant to bending about axes parallel to the thin dimension, said support attached in cantilever fashion to, and having one long dimension extending past the body's edge and generally perpendicular thereto, said support carrying the pad at its free end with the plane of the pad's flying surface generally parallel to the support's long dimensions;

(c) a relatively rigid load arm having first and second ends;

(d) means for supporting the load arm at a first end adjacent the body in a position placing the load arm's second end adjacent the side of the pad opposite the flying surface, said load arm supporting means including resilient bias means forcing the load arm's second end toward the pad with predetermined force;

(e) a bracket attached to the pad and encircling the load arm adjacent its second end;

(f) a lifting surface carried on the load arm intermediate its ends; and

(g) lifting means pivotably attached to the body and including an actuation area, for pivoting into engagement with the lifting surface on the load arm and shifting the load arm in opposition to the bias produced thereon by the bias means, when force is applied to the actuation area to rotate the lifting means through at least a preselected angle.

4,302,790
MAGNETIC RECORDING HEAD WITH EFFECTIVE MAGNETIC GAP LENGTH LESS THAN ABOUT 15μ INCHES

James U. Lemke, Del Mar, Calif., assignor to Eastman Kodak Company, Rochester, N.Y.
Filed Apr. 11, 1979, Ser. No. 29,095
Int. Cl.³ G11B *5/25, 5/62*
U.S. Cl. 360—119 12 Claims

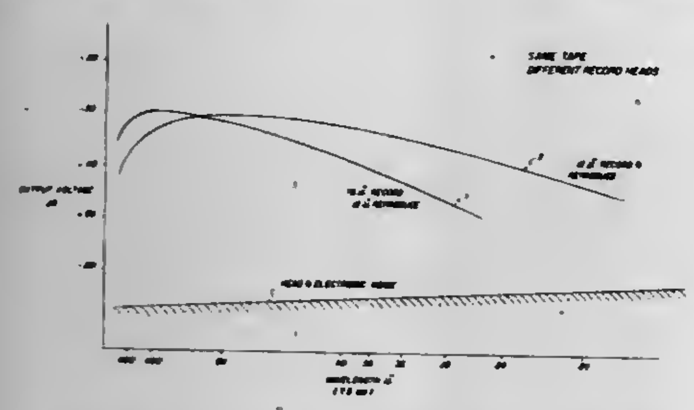

1. In magnetic recording apparatus of the type having
(a) a gapped magnetic head for recording information signals in a magnetic medium,
(b) means for providing relative motion between said head and said medium, and
(c) means for applying information signals to said head for the recording of said signals in said medium,

the improvement wherein said head has an effective magnetic record gap length of less than about 15μ", said gap lying so that its length extends in the direction of relative motion between said head and medium.

4,302,791
POWER SUPPLY SEQUENCING APPARATUS

James E. Buchanan, Bowie, and Daniel G. Damon, Laurel, both of Md., assignors to The United States of America as represented by the Secretary of the Air Force, Washington, D.C.
Filed Sep. 19, 1979, Ser. No. 77,058
Int. Cl.³ H02H *3/24*
U.S. Cl. 361—86 7 Claims

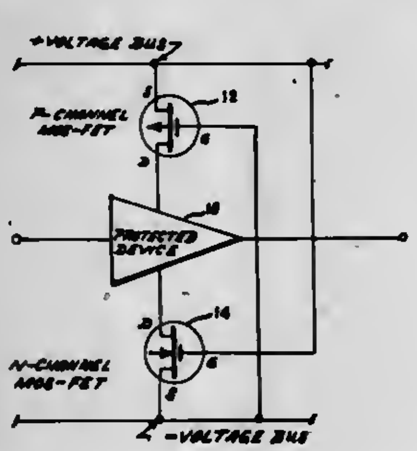

1. A power supply sequencing apparatus to simultaneously control the application or removal of supply voltages of opposite polarity to an electronic device comprising in combination:

a first and second voltage supply means, said first and second voltage supply means being of opposite polarity, and,

a first amplifier and a second amplifier, said first amplifier including a first main conduction path and a first control electrode, said first control electrode controlling the current flowing through said first main conduction path, said second amplifier including a second main conduction path and a second control electrode, said second control electrode controlling the current flowing through said second main conduction path, the current flowing through said first and second main conduction paths being controlled in the same direction by signals of opposite polarities applied to said first and second control electrodes, said first control electrode is directly connected to said second voltage supply means, said second control electrode is directly connected to said first voltage supply means, said first main conduction path being connected from said first voltage supply means to said electronic device, said second main conduction path being connected from said electronic device to said second voltage supply means.

4,302,792
TRANSISTOR PROTECTION CIRCUIT

Leopold A. Harwood, Bridgewater, N.J., assignor to RCA Corporation, New York, N.Y.
Filed Jun. 26, 1980, Ser. No. 163,149
Int. Cl.³ H02H *3/24*
U.S. Cl. 361—92 11 Claims

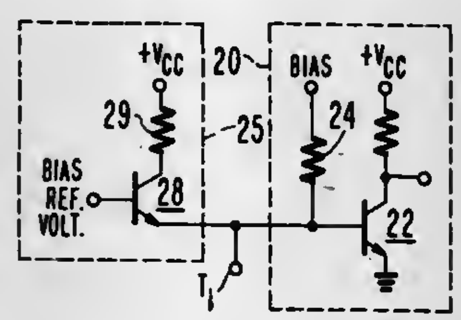

1. An arrangement for protecting a semiconductor device from electrical stress damage due to spurious high voltage transients, said semiconductor device comprising a semiconductor junction coupled to a circuit point at which said transients may appear and susceptible of damage from electrical stress when said transients exceed a given level, said protecting arrangement comprising:

a protection transistor with a collector electrode coupled to an operating potential, a base electrode, and an emitter electrode coupled to said circuit point; and

means for applying a reference bias voltage to said base electrode in such manner that the bias of said base electrode is determinable independent of bias of said semiconductor device and bias at said circuit point, said reference bias voltage being operative to reverse bias the collector-base junction of said protection transistor and to provide reverse biasing of the base-emitter junction of said protection transistor in the absence of said transients so as to render said protection transistor normally nonconductive, the level of said reference bias voltage being such that the base-emitter junction of said protection transistor is forward biased in response to transients exceeding a threshold level below said given level to permit conduction in the emitter-collector path of said protection transistor to divert transient currents away from said semiconductor device.

4,302,793
ELECTRONIC COOLING

Thomas G. Rohner, Midland, Tex., assignor to Submergible Oil Systems, Inc., Midland, Tex.
Filed Nov. 30, 1979, Ser. No. 99,016
Int. Cl.³ H05K *7/20*
U.S. Cl. 361—385 10 Claims

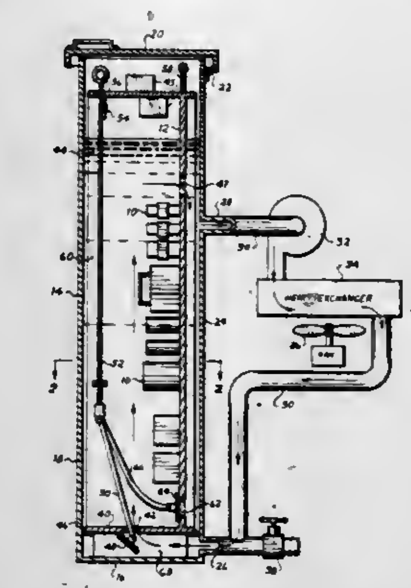

1. The process of cooling an electronic device having
a. a tank having
(i) a bottom,
(ii) sides, and
(iii) a top,
(iv) with a uniform cross section configuration between the bottom and top,
b. said top opening from said tank,
c. a chassis within the tank,
d. electronic components mounted on said chassis,
e. cooling liquid at least partially filling said tank,
f. a circulating pump fluidly attached to the tank, and liquid circulating from the upper portion of the tank through a heat exchanger and returned to the bottom of the tank,

wherein the improved method comprises the following steps:
g. sealing the bottom of the chassis to the sides of the tank, and
h. pumping cooling liquid beneath the bottom of the chassis.

4,302,794
LINEAR MULTILAMP PHOTOFLASH UNIT

Emery G. Audesse, Beverly, Mass., and Donald W. Hartman, Williamsport, Pa., assignors to GTE Products Corporation, Stamford, Conn.
Filed Sep. 4, 1979, Ser. No. 72,251
Int. Cl.³ G03B *15/02*
U.S. Cl. 362—15 34 Claims

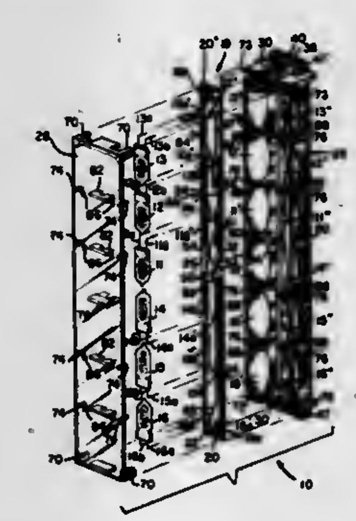

1. A multilamp photoflash unit comprising, in combination, a printed circuit board in the form of an elongated strip and having lamp-firing circuitry thereon, a plurality of electrically ignitable flashlamps disposed in a linear array along said printed circuit strip and having lead-in wires connected to said circuitry, an elongated housing member having a longitudinal channel within which said printed circuit strip is located, said housing member having reflective surfaces adjacent said flashlamps, and a light-transmitting cover panel attached to said housing member and enclosing said flashlamps therein.

4,302,795
TAMPER RESISTANT SNAP-FIT STROBE HOUSING

Bruce K. Johnson, Andover, and David Van Allen, Malden, both of Mass., assignors to Polaroid Corporation, Cambridge, Mass.
Filed Nov. 19, 1979, Ser. No. 81,188
Int. Cl.³ G03B *5/02*
U.S. Cl. 362—16 7 Claims

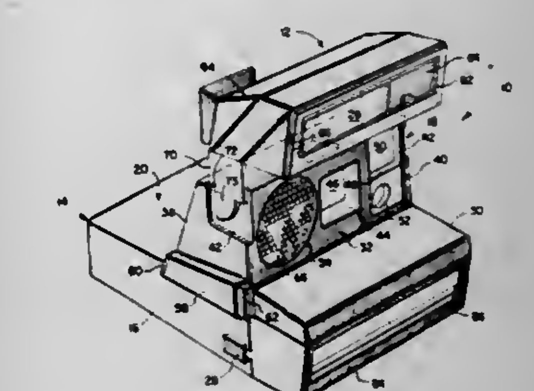

1. In a housing for retaining electric and electronic elements of a photographic flash unit; said housing comprising mating first and second housing components; a first latching arrangement carried on the interior of an exterior wall of the first housing component; a second flexible latching arrangement carried by the second housing component and projecting therefrom in a manner and direction to engage and be flexed by said first latching arrangement into a latched condition with said first latching arrangement when said housing components are mated to thereby prohibit separation of said housing components when said housing components are pulled in opposite directions in a given plane generally parallel to the plane of said wall, the improvement comprising:

retaining means extending from said wall in overlapping relationship to a surface of said second latching arrangement facing away from said wall so as to engage and retain said second latching arrangement in continuous engagement with said first latching arrangement when said wall is pulled in opposite directions relative to said first latching arrangement at an angle to said given plane.

4,302,796
LOW DRAG INTEGRATION OF LASER BEAM POINTING DEVICE INTO AIRCRAFT

Robert G. Gustavson, Los Angeles, and Darold B. Cummings, Inglewood, both of Calif., assignors to The United States of America as represented by the Secretary of the Air Force, Washington, D.C.
Filed May 27, 1976, Ser. No. 688,460
Int. Cl.³ B64D *47/02*
U.S. Cl. 362—62 8 Claims

1. A laser beam pointing system, adapted for use in an aircraft having a fuselage with an upper external surface and a lower external surface, a left side fairing with a leading edge, a left wing with a wing root, a right side fairing with a leading edge, and a right wing with a wing root, wherein said left side fairing blends into said root of said left wing, and said right side fairing blends into said root of said right wing, and wherein said fuselage, said external surfaces of said fuselage, said fair-

ings, and said wings, with roots are all aerodynamically configurated, comprising:

a. a laser beam source, internal of said aircraft, emitting a laser beam of predetermined width;

b. and, a plurality of laser beam pointing devices, wherein each one of said pointing devices of said plurality includes:

(1) a rotatable housing shaped in the form of a right circular cylinder having a first end with an opening therein to permit the passage into said housing of said emitted laser beam, a second end, and a cylindrical surface with an opening therein to permit the passage of the emitted laser beam out of said housing and out of said aircraft, and with said housing also having a horizontal axis, around which said housing is selectively rotatable;

(2) means for rotating said housing operatively associated with said housing;

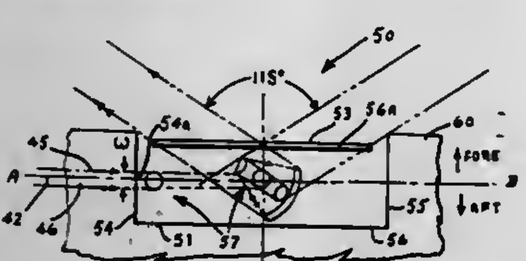

(3) a window positioned in, and attached to, said housing at said opening in the cylindrical surface of the rotatable housing, wherein said window is of dimensions to permit the transmission therethrough of the emitted laser beam of predetermined width;

(4) and, at least one selectively rotatable optical means, in optical alignment with the emitted laser beam, and positioned within and attached to said rotatable housing, for directing said emitted laser beam through said window and out of said aircraft;

wherein each one of said plurality of laser beam pointing devices is mounted on and in said aircraft, and is integrated with the aircraft to conform to the aerodynamic configuration of the aircraft.

4,302,797
HAND TOOLS
Gerald Cooper, London, England, assignor to Arrowlite Tools Limited, London, England
Filed Oct. 15, 1979, Ser. No. 84,856
Claims priority, application United Kingdom, Oct. 16, 1978, 40652/78; Aug. 10, 1979, 27989/79
Int. Cl.³ B25K *23/18*
U.S. Cl. 362—119 **11 Claims**

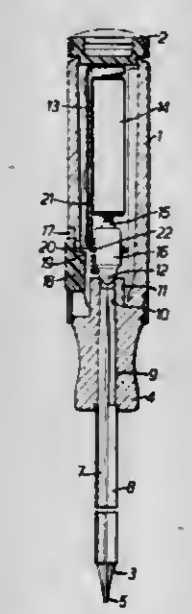

1. A hand tool having a handling portion and an elongate body portion which terminates in a working part of small cross-section or dimensions in relation to the length of the body portion, the working part being shaped to engage or contact an element to be worked on by operation of the hand tool, the handling portion comprising an opaque casing and housing a source of illumination having an electric power source therefor housed within or externally of the housing and the body portion carrying one or more optical fibres extending between the source of illumination and the surface of the tool at or adjacent said working part for transmission of substantially the entire light output of the source of illumination therealong for illumination thereby of the element to which the working part is applied.

4,302,798
PAN FOR CEILING MOUNTED LIGHT FIXTURE
Hoffman Sit, Glenview, Ill., assignor to McGraw-Edison Company, Rolling Meadows, Ill.
Filed Apr. 7, 1980, Ser. No. 137,901
Int. Cl.³ F21S *1/02*
U.S. Cl. 362—147 **9 Claims**

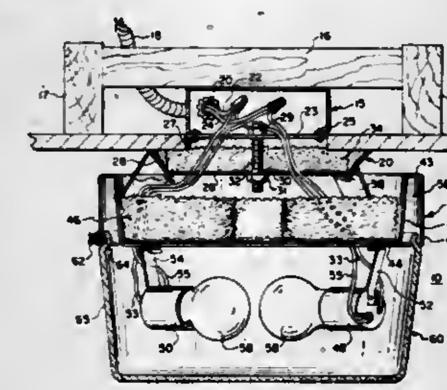

1. A light fixture for mounting on a ceiling or the like support surface including in combination;

a pan comprising a canopy portion mountable in contacting engagement with said support surface, a first layer of insulative material disposed between said canopy portion and said support surface, a housing portion having rim means, a support shelf extending generally horizontally inwardly within said rim means and arm means joining said canopy and housing portions, said housing portion being suspended from said canopy portion by said arm means, a second layer of insulative material supported on said shelf beneath said canopy and lampholder means mounted on said shelf on the surface thereof opposite said second insulative layer.

4,302,799
BREAKAWAY REUSEABLE RUNWAY MARKER LAMP FOR AIRPORTS
Walter R. Behrens, R.R. 6, Country Club Rd., Minot, N. Dak. 58701
Filed Sep. 17, 1979, Ser. No. 76,218
Int. Cl.³ H01R *33/00*
U.S. Cl. 362—226 **7 Claims**

1. A breakaway, reuseable marker lamp for an airport runway, mountable to a fixed ground engaging electrical junction box containing electrical wiring and located adjacent the runway and dislodgeable relative to the box by aircraft impact with minimal harm to aircraft, marker lamp and electrical wiring comprising:

a base rigidly mountable to the electrical junction box for retention by the box, and further including an upright support member extending upwardly relative to the box and having an interior channel communicating with the box for passage of electrical wiring from the box;

an upright post member having upper and lower ends and having a hollow interior extending between said upper and lower ends for passage of the electrical wiring from said support member of said base to the upper end of said post;

a quickly releaseable coupling device on one of said members to permit the other of said members to be inserted within said coupling device and to be frictionally, removably retained within said coupling device, said device being formed of a breakage resistant, elastically deformable, plastic material which is elastically deformable during impact so as to permit dislodgment of the other of said members from said device and separation of said post member relative to said support member when said post member is struck, the structural integrity of said coupling device and members remaining intact after impact; and

a lamp housing fixed to said upper end of said post member and operably connectable to the electrical wiring.

4,302,800
LAMP MEANS WITH ORIENTABLE MODULAR ELEMENTS
Jean F. S. Pelletier, 37 avenue de la Liberte, 95600 Eaubonne, France
Filed Oct. 10, 1979, Ser. No. 83,369
Claims priority, application France, Oct. 10, 1978, 78 28826
Int. Cl.³ F21V *21/14*
U.S. Cl. 362—250 **6 Claims**

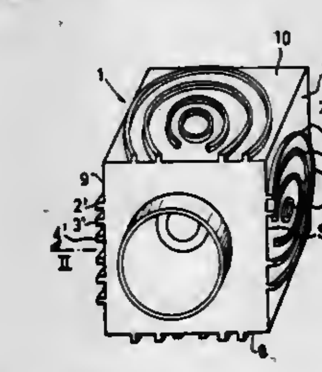

1. Lamp means consisting of assembled polyhedric modules, each module comprising a shaped, hollow polyhedron and light means mounted in said polyhedron, each polyhedron having sides with circular ribs extending therefrom whereby the assembly of two consecutive modules is achieved by nesting said circular complementary ribs provided on the sides to be assembled of these two modules, the complementary ribs being coaxial and thereby permitting each module to rotate independently about said axis.

4,302,801
LOW TEMPERATURE REFLECTOR FOR INDUSTRIAL LAMP
James J. Duddy, 514 N. Metcalf St., Lima, Ohio 45801
Filed Oct. 22, 1979, Ser. No. 87,415
Int. Cl.³ F21V *7/00, 29/00*
U.S. Cl. 362—345 **5 Claims**

1. An electric lamp reflector system comprising in combination, a hollow plastic electric lamp socket holder housing a socket of conventional domestic size and having a substantially cylindrical outer surface adjacent the outer end thereof, a first metallic reflector substantially hemispherical in shape and open at the outer end and having in the other end a central opening terminating in a short cylindrical portion complementary to the diameter of said cylindrical outer surface of said socket holder and fitted on the same for support, a short portion of the outer end of said first reflector being substantially cylindrical, a second metallic reflector of similar shape and surrounding said first reflector and spaced a substantially uniform limited distance from said first reflector throughout the curved area thereof, said second reflector having an open outer end and the other end having a central opening terminating in a cylindrical sleeve closely surrounding and interfitting with said short cylindrical portion of said first reflector and extending a limited distance beyond the outer end thereof, said first reflector also having an annular shoulder of limited diameter

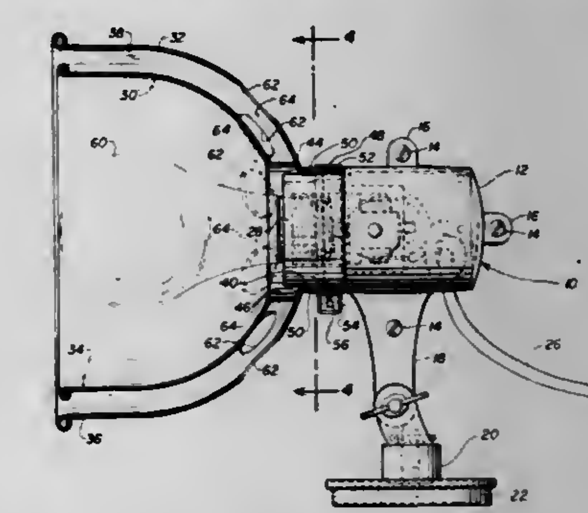

adjacent the inner end of said short cylindrical portion and spaced from the curved portion of said first reflector a distance equal to the spacing between said first and second reflectors and operable to establish said spacing upon assembling said reflectors, and a circumferentially spaced circular row of heat transmitting circular holes in said second reflector and each of uniform diameter substantially half the diameter of said cylindrical outer surface of said socket holder and the edges of said holes nearest said cylindrical sleeve being spaced from said sleeve a distance substantially equal to the diameter of said holes, whereby ambient air passes through certain of said holes and exits through others, thereby maintaining said reflectors at a temperature incapable of producing a burn on human tissue when said reflectors are disposed horizontally.

4,302,802
FLYBACK POWER SUPPLY REGULATOR
John W. Hyde, Parsippany, and Dennis W. Gyma, Netcong, both of N.J., assignors to Hewlett-Packard Company, Palo Alto, Calif.
Filed Aug. 8, 1979, Ser. No. 64,677
Int. Cl.³ H02M *3/335*
U.S. Cl. 363—21 **8 Claims**

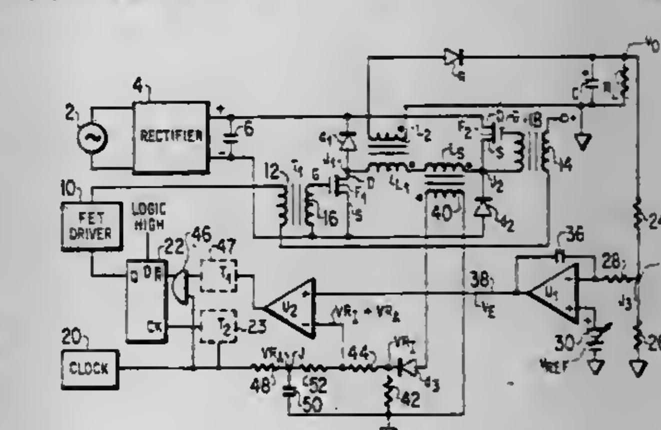

1. A power supply comprising

input terminals to which a direct current voltage may be applied,
a transformer having primary and secondary windings,
switching means connected in series with said input terminals and said primary winding,
a storage capacitor
rectifying means coupled to said secondary winding and said storage capacitor so as to produce a rectified direct current voltage across said capacitor from any alternating current voltage appearing on said secondary winding,
a clock for providing spaced pulses,
means responsive to the pulses from said clock and having a predetermined delay for closing said switching means at the beginning of spaced intervals and for opening them at the end of the intervals or at an earlier time within the intervals if disabled,
means for generating a ramp signal that increases in amplitude from a given value during said predetermined delay,
means for deriving an error signal corresponding to the difference between the actual voltage across said storage capacitor and the voltage that is desired across said capacitor, and
means for disabling said means for closing said switching means at a time that is less than said predetermined delay after said ramp signal attains a value corresponding to the value of said error signal.

4,302,803
RECTIFIER-CONVERTER POWER SUPPLY WITH MULTI-CHANNEL FLYBACK INVERTER

Randolph D. W. Shelly, Rosemere, Canada, assignor to Sperry Corporation, New York, N.Y.
Filed Jan. 16, 1980, Ser. No. 112,573
Int. Cl.³ H02M *3/335*
U.S. Cl. 363—20 3 Claims

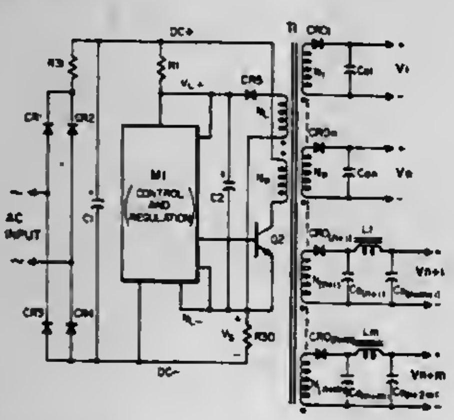

1. A converting power supply, comprising:
means for converting an AC voltage to an unregulated DC voltage;
a flyback inverter coupled to said converter means, comprising;
a transformer having a primary winding coupled to said unregulated DC voltagve, at least one secondary winding and an auxiliary primary winding, and
switch means for causing said transformer to store power in said primary winding during the ON time of said switch means and for causing said transformer to induce an output on said secondary winding during the OFF time of said switch means, and
pulse width modulation control means coupled to said auxiliary primary winding and said switch means and operable in a mode for controlling the duty cycle of said switch means, said pulse width modulation control means comprising;
a fixed frequency timer,
threshold detector means for ensuring that said pulse width modulation control means operates only so long as a disable voltage level is exceeded, and
reference detector means coupled to said switch means for comparing the voltage across said auxiliary primary winding to a reference voltage and producing a pulse width modulated (PWM) signal, the period of said PWM signal being determined by said fixed frequency timer and the duration of the ON time being inversely related to the difference between the reference and auxiliary primary winding voltages,
said pulse width modulation control means thereby regulating the voltage across each of said secondary windings.

4,302,804
DC VOLTAGE MULTIPLIER USING PHASE-SEQUENCED CMOS SWITCHES

Clifford J. Bader, West Chester, Pa., assignor to Burroughs Corporation, Detroit, Mich.
Filed Sep. 4, 1979, Ser. No. 72,145
Int. Cl.³ H02M *3/06*
U.S. Cl. 363—60 12 Claims

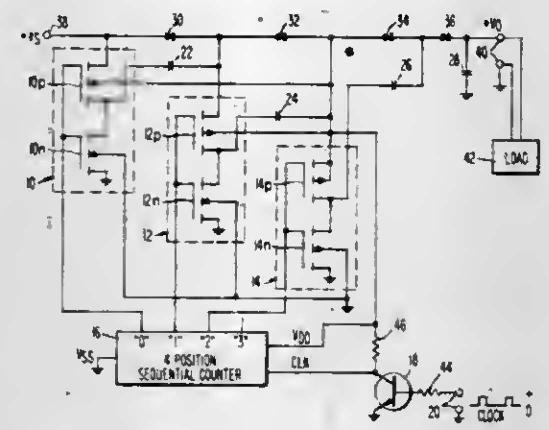

1. A DC voltage multiplier for increasing an input supply voltage to a desired output level comprising:
a plurality of stages required to produce said desired output level, each of said stages having a pair of switching means with complementary electrical characteristics and being coupled to each other at a common junction,
a first stage having its pair of switching means coupled between said input supply voltage and a reference potential,
a capacitor having a first and a second terminal, means coupling said first terminal to said common junction of said pair of switching means,
unidirectional current conducting means coupling said second terminal of said capacitor to said input supply voltage,
means for applying multi-phase sequential control signals having first and second predetermined amplitudes in common to the respective pairs of switching means of said plurality of stages, a signal of said first predetermined amplitude being applied sequentially to said stages such that in any given phase, said last mentioned signal is applied to the switching means of one of said stages while signals of said predetermined amplitude are applied respectively to the switching means of all the remaining stages,
first phase control signals including said signal of said first predetermined amplitude, said last mentioned signal being applied to said switching means of said first stage and causing a first of said pair of the last mentioned switching means connected between said input supply voltage and said common junction to assume a high resistance state and the second of said pair of switching means connected between said common junction and said reference potential to assume a lower resistance state, thereby establishing a charging path for said capacitor and causing the latter to be charged substantially to the level of said input supply voltage,
second phase control signals including a signal of said second predetermined amplitude, said last mentioned signal being applied to said switching means of said first stage and causing said first of said pair of switching means to assume a low resistance state and said second of said pair of switching means to assume a high resistance state, whereby the charge on said capacitor is stacked upon the level of said input supply voltage such that a potential substantially equal to twice that of the last mentioned voltage appears at said second terminal of said capacitor,
at least a second stage having a second pair of switching means coupled between said second terminal of said capacitor and said reference potential,
a second capacitor having a first and a second terminal, means coupling said first terminal of said second capacitor to said common junction of said second pair of switching means,
a second unidirectional current conducting means coupling said second terminal of said capacitor to said second terminal of said second capacitor.

4,302,805
POWER SUPPLY UTILIZING A HIGH FREQUENCY MAGNETIC AMPLIFIER

Alejandro Marez, and Jon J. Spykerman, both of Fort Worth, Tex., assignors to Kyber Engineering, Inc., Fort Worth, Tex. Continuation of Ser. No. 864,771, Dec. 27, 1977, abandoned. This application Feb. 26, 1980, Ser. No. 124,925
Int. Cl.³ H02P *13/24*
U.S. Cl. 363—91 19 Claims

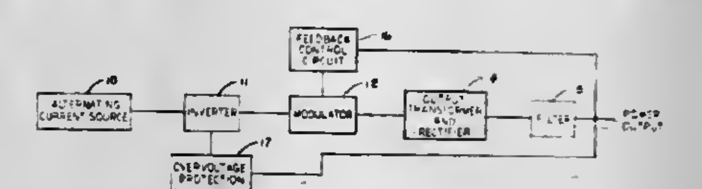

1. Apparatus for regulating the output voltage thereof as applied to a load, comprising:
at least one ferrite toroid comprising a first stack,
at least one ferrite toroid comprising a second stack spaced from said first stack,
a first winding passing through the centers of said first stack and said second stack,
a second winding passing through the center of said first stack,
a third winding passing through the center of said second stack and connected in series with said second winding,
output means connected to one terminal of said second winding and providing an output voltage applied to the load,
a square wave generator providing an output connected to the second terminal of said third winding, and
feedback means connected to the load and responsive to the voltage supplied thereto and generating a regulating voltage applied to said first winding.

4,302,806
FILTER FOR POLYPHASE RECTIFIER

Richard H. Baker, Bedford, Mass., assignor to Exxon Research & Engineering Co., Florham Park, N.J.
Filed Jan. 11, 1980, Ser. No. 111,291
Int. Cl.³ H02M *7/06*
U.S. Cl. 363—126 22 Claims

1. In a system including at least a three-phase polyphase rectifier having a first terminal for providing a positive dc output voltage, a second terminal for providing a negative dc output voltage, and a third terminal for providing a point of reference potential for said positive and negative dc voltages, and a reactive load having a pair of operating voltage terminals connected to said first and second terminals, respectively, and a common terminal connected to said third terminal, said reactive load producing reactive currents that must be permitted to flow bidirectionally between said rectifier and said load, a filter circuit comprising:
first and second capacitors each having one end connected to said third terminal;
current conductive means connected in series with said first and second capacitors between said first and second terminals, for initially providing rapid charging of said first and second capacitors to have a level of voltage thereacross at least equal to the level of said positive and negative dc voltages, plus the peak voltage of any ripple voltages

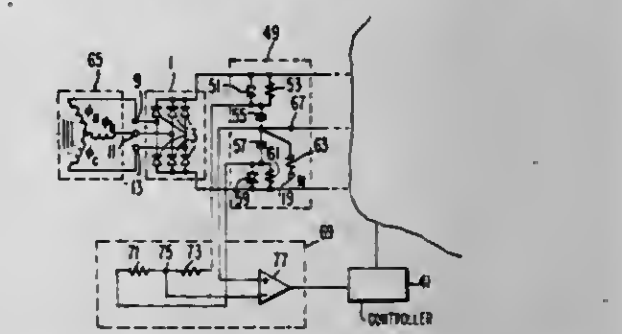

imposed thereupon, respectively, and thereafter substantially preventing discharge of said first and second capacitors into said reactive load, concurrent with permitting reactive load currents to flow between said first and third terminals and through said first capacitor, and between said second and third terminals and through said second capacitor, thereby ensuring that said rectifier provides substantially all of the current requirements of said reactive load exclusive of said filter.

4,302,807
CONTROLLED CURRENT BASE DRIVE CIRCUIT

Sandor Mentler, Downingtown, Pa., assignor to Burroughs Corporation, Detroit, Mich.
Filed Aug. 4, 1980, Ser. No. 174,753
Int. Cl.³ H02M *7/537*
U.S. Cl. 363—134 14 Claims

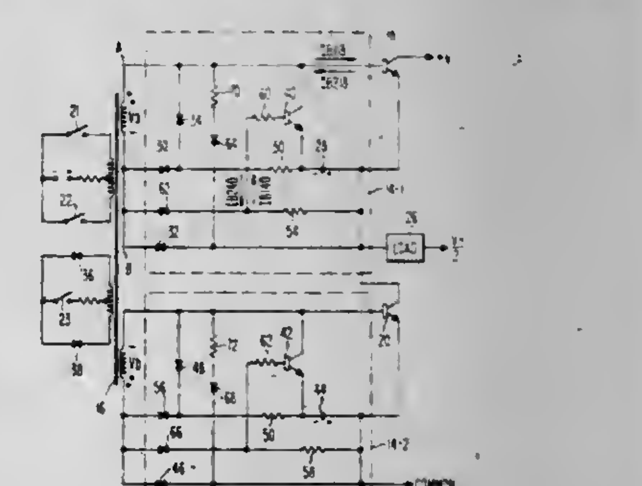

1. A base drive circuit for coupling control signals from a secondary winding of a coupling transformer into the base of a power switching transistor, said base drive circuit comprising:
a first diode connected between the emitter of said power switching transistor and a first end of said secondary winding;
a series combination of a first resistive element and a second diode, said series combination connected between the emitter of said power switching transistor and the first end of said secondary winding; and
a switching transistor, the collector of said switching transistor connected to a second end of said secondary winding and the base of said power switching transistor, the emitter of said switching transistor connected through a first capacitor to the emitter of said power switching transistor, the base of said switching transistor connected between said first resistor and said second diode, the emitter of said switching transistor further connected through a

second resistive element to third and fourth diodes, said third diode connected to the first end of said secondary winding, said fourth diode connected to the second end of said secondary winding.

4,302,808
MULTILEVEL INTERRUPT HANDLING APPARATUS
Vittorio Zanchi, Milan, and Tiziano Macciantl, Pregnana Milanese, both of Italy, assignors to Honeywell Information Systems Italia, Milan, Italy
Filed Nov. 2, 1979, Ser. No. 90,616
Claims priority, application Italy, Nov. 6, 1978, 29453 A/78
Int. Cl.³ G06F *3/04*
U.S. Cl. 364—200 **3 Claims**

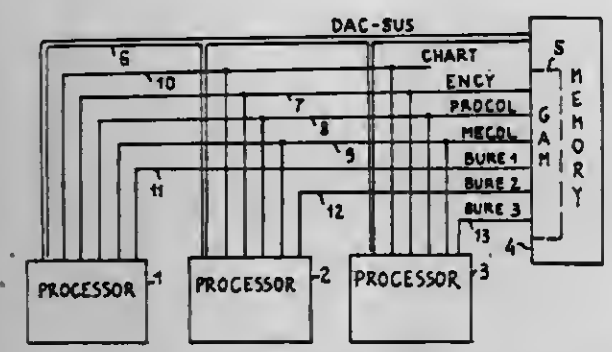

1. In a data processing system including (A) a plurality of units coupled together with one BUS to which each unit may access through an access request and (B) a BUS access control unit coupled to said BUS, apparatus for handling said access requests comprising:

first means in each of said units for generating and placing on said BUS access requests with at least two separate priority levels, high and low, respectively;

a priority network in said BUS access control unit for assigning a fixed relative priority to requests received from said first means, independently of their priority level; and

second means in each of said units for recognizing the presence of high priority level access requests generated by any one of said units and for masking all possible low priority level access requests generated by said first means in the same unit during the time in which at least a high priority level access request is present.

4,302,809
EXTERNAL DATA STORE MEMORY DEVICE
Daniel P. Drogichen, West Chester, Pa., assignor to Burroughs Corporation, Detroit, Mich.
Continuation of Ser. No. 920,557, Jun. 29, 1978, Pat. No. 4,218,757. This application Nov. 16, 1979, Ser. No. 94,700
The portion of the term of this patent subsequent to Nov. 19, 1997, has been disclaimed.
Int. Cl.³ G06F *13/00, 9/36*
U.S. Cl. 364—200 **12 Claims**

1. An external data store memory device for processing data to be transmitted to a digital data processor, said digital data processor providing an a-bit address bus for specifying an address corresponding to a location to be read from said external data store memory device, an n-bit bidirectional data bus for transferring data between said data processor and said external data store memory device, and a control signal for controlling the storing of an n-bit data constant supplied by said data processor in said external data store memory device, said data processor characterized by having an n-bit instruction format, said external data store memory device comprising:

an addressable memory having an address input and a set of output bit positions and containing addressable storage locations, the address input to said addressable memory connected to said address bus;

a base register having an output and an input connected to said bidirectional data bus;

gating means connected to a first subset of the set of output bit positions of said addressable memory and the output of said base register, said gating means responsive to selected data patterns from the first subset of the set of output bit positions of said addressable memory, said gating means for selectively gating the contents of said base register to the output of said gating means; and

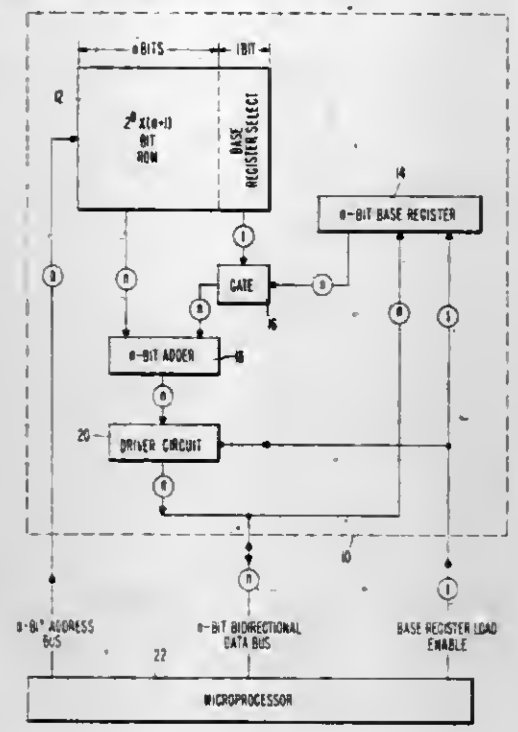

adder means, said adder means including an adder having two inputs and an output, said adder receiving its inputs from the output of said gating means and a second subset of the set of output bit positions of said addressable memory, the output of said adder connected to said bidirectional data bus, said adder means connected between said adder and said bidirectional data bus further including output control means, responsive to the receipt of said control signal from said data processor, said output control means for turning off the output of said adder.

4,302,810
METHOD AND APPARATUS FOR SECURE MESSAGE TRANSMISSION FOR USE IN ELECTRONIC FUNDS TRANSFER SYSTEMS
Willard G. Bouricius, and Paul E. Stuckert, both of Katonah, N.Y., assignors to International Business Machines Corporation, Armonk, N.Y.
Filed Dec. 28, 1979, Ser. No. 108,071
Int. Cl.³ G06F *3/023, 7/04, 15/02, 15/30*
U.S. Cl. 364—200 **12 Claims**

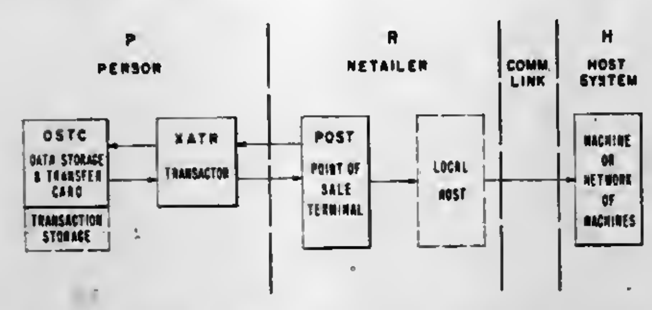

1. A method for effecting the secure transmission to a Host machine or system (H) of a transaction message (TM) which describes a financial transaction between a Person (P) and a Retailer (R) in an Electronic Funds Transfer (EFT) environment, said method comprising the Person (P) and the Retailer (R) agreeing on at least a predetermined portion of the contents of the transaction message (TM) which is to be sent to a Host (H) where the Electronic Funds Transfer is to be effected, separately encrypting the message (TM) under the two respective secret encryption keys K_P and K_R to form messages (TM, K_P) and (TM, K_R), communicating the message (TM, K_P) to R, R further encrypting same under the key K_R to form a doubly encrypted message ((TM, K_P), K_R), transmitting the complete message [((TM, K_P), K_R)+(TM, K_R)] to H, H accessing the two private keys K_P and K_R from its own secret files and decrypting the message received from R to recover the two originally encrypted transaction messages (TM), H then comparing portions of the two separately decrypted transaction messages (TM) for identity and if identical, completing the transaction.

4,302,811
AUTOMATIC TRAIN OPERATION WITH POSITION STOP AND VELOCITY CONTROL
Stuart W. McElhenny, Erie, Pa., assignor to General Electric Company, Erie, Pa.
Filed Sep. 10, 1979, Ser. No. 74,365
Int. Cl.³ G06F *15/50*
U.S. Cl. 364—426 **8 Claims**

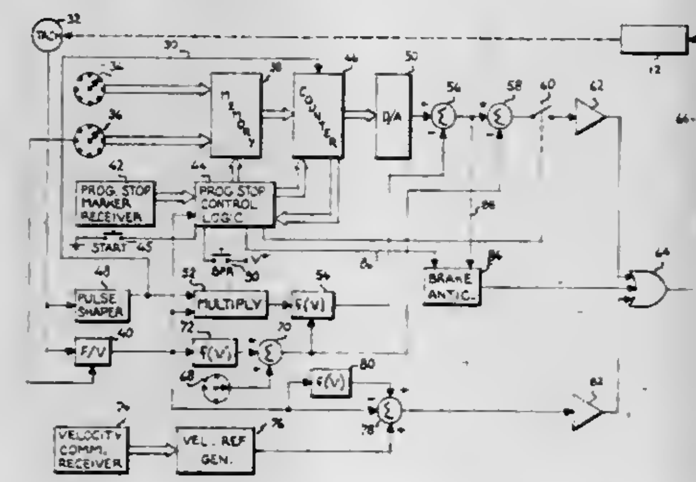

1. In an automatic control system for a train of one or more wheeled vehicles traveling on a fixed guideway along which a plurality of wayside signal devices are located at different predetermined distances from a desired stopping point for providing information to the train indicative of the distance from a signal device to the desired stopping point, an improved arrangement for effecting operation of the train on a predetermined velocity-distance profile comprising:

(a) means for monitoring the rotational velocity of a selected wheel on a predetermined one of the vehicles and for producing a first signal representative of said rotational velocity;

(b) means for producing a second signal representative of the diameter of said selected wheel;

(c) means operative each time the train passes one of the wayside signal devices for generating a third signal that indicates the distance between the train position on the guideway and the desired stopping point;

(d) addressable memory means for storing a plurality of values respectively representative of the number of revolutions that a wheel of various different diameters would turn in order for the train to move the different predetermined distances on the guideway;

(e) logic control means responsive to said second and third signals for generating a memory address that causes said memory means to output the particular value stored at that address;

(f) counter means connected for receiving said memory output, said counter means being set to the value represented by said memory output each time the train passes one of the wayside signal devices;

(g) said counter means being responsive to said first signal for counting down from said set value in proportion to the actual revolutions of said selected wheel whereby the value remaining in said counter means is a continuous reference of the distance remaining to the desired stopping point;

(h) means responsive to said first and second signals for producing a velocity signal representative of the linear velocity of the train of vehicles;

(i) means for computing a value representative of the distance remaining to the desired stopping point as a function of the linear velocity of the train and a desired deceleration rate;

(j) means for comparing said computed distance value with said reference distance value and for producing an error signal representative of the difference therebetween; and

(k) means responsive to said error signal for varying the actual velocity of the train in a manner to minimize said error signal and thereby stop said train at the desired stopping point.

4,302,812
ANALOG SIGNAL LEVEL MONITOR
Theodore A. Fitch, Cliffwood Beach, N.J., assignor to Bell Telephone Laboratories, Incorporated, Murray Hill, N.J.
Filed Mar. 31, 1980, Ser. No. 136,153
Int. Cl.³ G06J *1/00*
U.S. Cl. 364—483 **5 Claims**

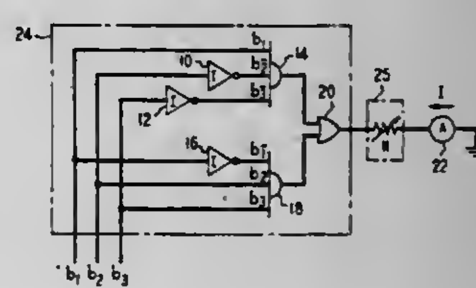

1. A voltage level monitoring device comprising:

logic means (24) including a plurality of M input ports, each input port for receiving a separate one of M bits of an M-bit binary signal, said M-bit binary signal representative of an analog voltage signal comprising an rms value (V_{rms}) and a known distribution function; and

indicating means (22) connected between the output of said logic means and ground for indicating a current level passing therethrough

characterized in that

the logic means comprises means (10,12,14,16,20) which is responsive to the M-bit binary signal for generating an output signal related to a ratio of a predetermined analog voltage level (V_x) and the rms value of the analog voltage signal (V_{rms}) in accordance with the known distribution function of said analog voltage signal.

4,302,813
METHOD OF CONTROLLING OPERATION OF ROTARY MACHINES BY DIAGNOSING ABNORMAL CONDITIONS
Nobuo Kurihara; Mitsuyo Nishikawa, and Shigeyoshi Kawano, all of Ibaraki, Japan, assignors to Hitachi, Ltd., Tokyo, Japan
Filed Feb. 22, 1979, Ser. No. 13,820
Claims priority, application Japan, Feb. 22, 1978, 53-18486
Int. Cl.³ G06F *15/46;* **G01N** *29/00*
U.S. Cl. 364—508 **11 Claims**

1. A method of controlling a build-up speed of a rotary machine with a vibration-monitoring system comprising a vibration-responsive means preferably containing at least one vibration transducer mounted on a bearing, a running speed detector which transduces signals responding to the rotary machine speed, a diagnosing device with a frequency analyzer which analyzes a vibration signal from the vibration transducer, and a speed regulator which controls the speed of the

rotary machine responding to demand signals as a result of the vibration frequency analysis, comprising:

a first step of discriminating in which speed region a running speed of the rotary machine lies among a plurality of predetermined speed regions which are obtained by dividing the speed range, from start up to rated speed of the rotary machine, into critical speeds,

a second step of calculating harmonic components of a frequency spectrum which are predetermined in the respective divided speed regions,

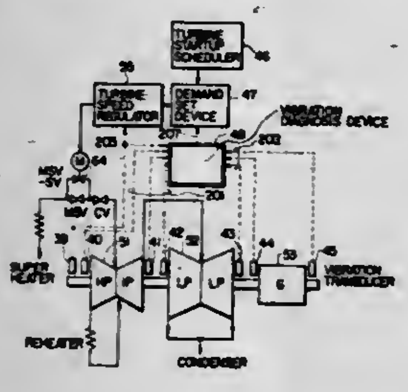

a third step of discriminating as to which one of a plurality of predetermined operating patterns corresponds to said calculated harmonic components of the frequency spectrum, which patterns include a speed raising region and a speed lowering region, which are closely related with components of rotation frequency, and

a fourth step of performing a predetermined speed control operation of the rotary machine depending on the discrimination result in said third step.

4,302,814
RELATIVE EXHAUST BACK-PRESSURE OF AN INTERNAL COMBUSTION ENGINE
Gary G. Full, Ellington, and Rinaldo R. Tedeschi, Newington, both of Conn., assignors to United Technologies Corporation, Hartford, Conn.
Filed Dec. 20, 1979, Ser. No. 105,446
Int. Cl.^{3} G01L *3/26*
U.S. Cl. 364—551 7 Claims

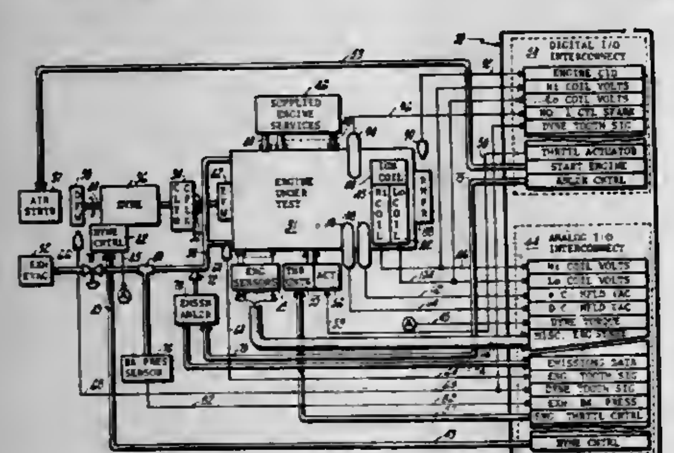

1. Apparatus for measuring the relative exhaust back-pressure contribution between cylinders of an internal combustion (IC) engine connected through its crankshaft to the drive shaft of an engine load and running at a selected speed, comprising:

position sensing means, adapted to be disposed along the drive shaft for providing crankshaft position signals indicative of the instantaneous angular position of the engine crankshaft at successive angle intervals within the engine cycle, each angle interval being less than that associated with a cylinder sub-cycle;

exhaust back-pressure sensing means, adapted to be disposed on the engine for providing signals indicative of the actual engine exhaust back-pressure; and

signal processing means, responsive to said crankshaft position signals and said actual engine exhaust back-pressure signals and having memory means for storing signals including signals definitive of the engine cycle,

for sampling and storing in said memory means, successive values of said actual exhaust back-pressure signals in response to the presence of each of said crankshaft position signals to provide an indication of the subcyclic fluctuations in exhaust back-pressure over at least one engine cycle, and

for comparing the magnitudes of each of said subcyclic fluctuations occurring in a common engine cycle with each other to provide signal indications of the relative exhaust back-pressure between cylinders.

4,302,815
SNAP ACCELERATION TEST FOR AN INTERNAL COMBUSTION ENGINE
Rinaldo R. Tedeschi, Newington, and Gary G. Full, Ellington, both of Conn., assignors to United Technologies Corporation, Hartford, Conn.
Filed Dec. 20, 1979, Ser. No. 105,448
Int. Cl.^{3} G01M *15/00;* F02B *43/02*
U.S. Cl. 364—551 5 Claims

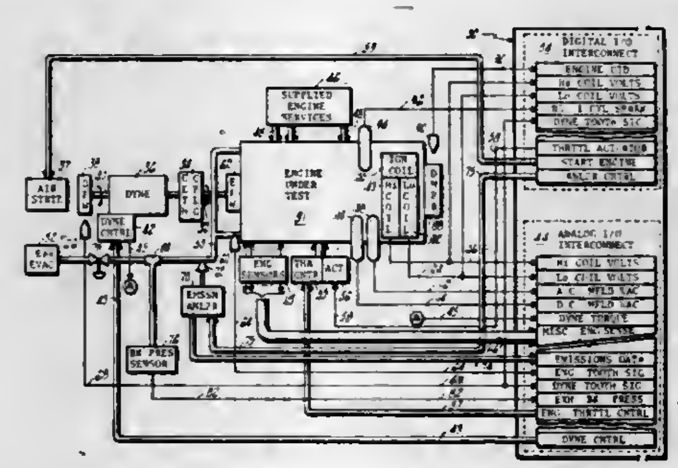

1. Apparatus for sensing the operation of an internal combustion (IC) engine accelerator pump which, in response to the acceleration of the engine by displacement of the engine throttle against its spring force to successive positions between idle and full throttle, provides enrichment of the fuel supplied to the engine cylinders in a first time interval of the acceleration, in advance of that provided by the engine power valve in a succeeding time interval of the acceleration, the apparatus comprising:

throttle control means, connected to the engine throttle for displacing the throttle against its spring force to either a low speed steady state position or a high speed full throttle position, each in response to the magnitude of an associated one of a steady state throttle position signal and a full throttle position signal presented to an input of said throttle control means;

exhaust analyzing means, responsive to the engine exhaust gas emissions for providing sensed emissions signals indicative of the actual concentration of a selected one or more of the engine exhaust gas constituents; and

electronic signal processing means, connected for response to said throttle control means and to said exhaust analyzing means, and having memory means for storing signals including said steady state position signal and said full throttle position signal, said processing means presenting said steady state position signal and said full throttle position signal to said throttle control means, alternately, in a related one of successive steady state and full throttle time periods, said full throttle time period having a value less than that of the first time interval of the acceleration, each of said successive steady state time periods including a quiescent time portion immediately preceding each of said full throttle time periods and including a post snap acceleration time portion immediately following each of said full throttle time periods, said processing means sampling the values of said sensed emissions signals from said analyzing means in each time period, and providing a signal ratio of said actual values sampled in said post snap acceleration time portion to said actual values sampled in said quiescent time portion as an indication of the operation of the accelerator pump.

4,302,816
KEY INPUT CONTROL APPARATUS
Haruo Yamamoto, Sayama, Japan, assignor to Casio Computer Co., Ltd., Tokyo, Japan
Filed Jun. 20, 1979, Ser. No. 50,512
Claims priority, application Japan, Jun. 29, 1978, 53-78905
Int. Cl.^{3} G06F *7/48*
U.S. Cl. 364—709 17 Claims

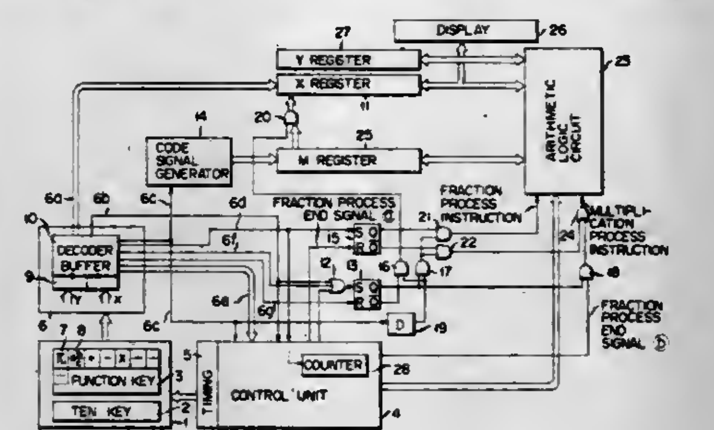

1. A key input control apparatus comprising:

key input means (1) having keys including function keys and a special key, said keys producing electrical signals corresponding respectively to the keys depressed, the special key having a constant number entry function and an arithmetic operation designating function;

memory means (6, 15, 13) coupled to said key input means for storing said signals provided from said key input means, which stored signals correspond to keys of said key input means which are depressed in the order of the key operations;

designating means (21, 22, 17, 16) coupled to said memory means and to said key input means and which is responsive to operation of said special key for selectively designating a constant number data inputting function or an arithmetic operation designating function, in accordance with said signals which have been stored in said memory means, which stored signals correspond to the keys of said key input means which have been depressed;

function execution means (24, 18, 20, 11, 23, 27) coupled to said memory means and to said designating means for executing a function specified by said designating means; and

display means (26) coupled to said key input means and to said function execution means for selectively displaying one of data keyed in from said key input means and the results of the function executed by said function execution means on the basis of the data keyed in from said key input means.

4,302,817
DIGITAL PSEUDO CONTINUOUS TONE DETECTOR
Gerald P. Labedz, Chicago, Ill., assignor to Motorola, Inc., Schaumburg, Ill.
Filed Feb. 14, 1980, Ser. No. 121,563
Int. Cl.^{3} G06F *15/31*
U.S. Cl. 364—724 8 Claims

1. A method of processing an input signal to detect at least one desired tone of a plurality of tones, comprising the steps of:

(a) digitizing the input signal to generate samples of the input signal at a predetermined rate;

(b) assigning each sample to a phase subregion of a reference waveform where the reference waveform has the frequency of the desired tone;

(c) summing the sample values for each phase subregion for sequential time intervals to obtain a phase subregion subtotal for each time interval;

(d) correlating, at the end of each time interval, for a number of the latest time intervals, the phase subregion subtotals against at least one local reference waveform so as to obtain a total correlation value for each local reference

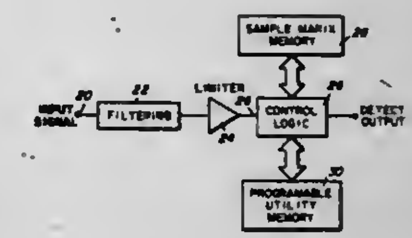

waveform, said total correlation value being a total summation of the products of the sum over a number of the latest time intervals of the subtotals of each phase subregion multiplied by the amplitude of a corresponding phase subregion of the local reference waveform;

(e) processing the total correlation values at the end of each time interval to obtain a sum of the absolute values of the total correlation values;

(f) comparing at the end of each time interval the sum of the absolute values of the total correlation values to a first threshold in generating a detection indication signal in response to said sum exceeding said first threshold.

4,302,818
MICRO-VECTOR PROCESSOR
George W. Niemann, Dallas, Tex., assignor to Texas Instruments Incorporated, Dallas, Tex.
Filed Jul. 10, 1979, Ser. No. 56,361
Int. Cl.^{3} G06F *7/38*
U.S. Cl. 364—736 31 Claims

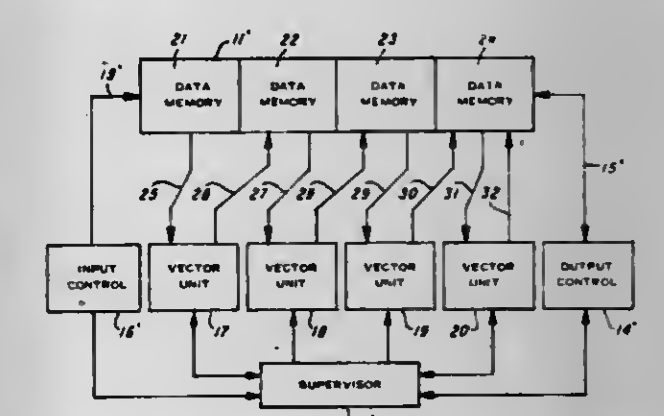

1. A micro-vector multi-processor system comprising:

(a) supervisor means for controlling the operation of the system;

(b) at least one data memory means connected to the supervisor means for storage and retrieval of digital information;

(c) input/output means connected to the supervisor means and the data memory means adapted to receive input signals to be processed and to store the signals in the data memory means, and to retrieve processed signals from the data memory means and to output the processed signals; and

(d) at least one vector computation means connected to the supervisor means and to the data memory means, responsive to the supervisor means for performing vector computations autonomously relative to the supervisor means, adapted to retrieve digital information from the data memory means required for the vector computations.

4,302,819

FAULT TOLERANT MONOLITHIC MULTIPLIER

Frederick A. Ware, Los Altos Hills, Calif., assignor to Hewlett-Packard Company, Palo Alto, Calif.

Filed Oct. 22, 1979, Ser. No. 86,842

Int. Cl.³ G06F *11/20, 7/52*

U.S. Cl. 364—737 3 Claims

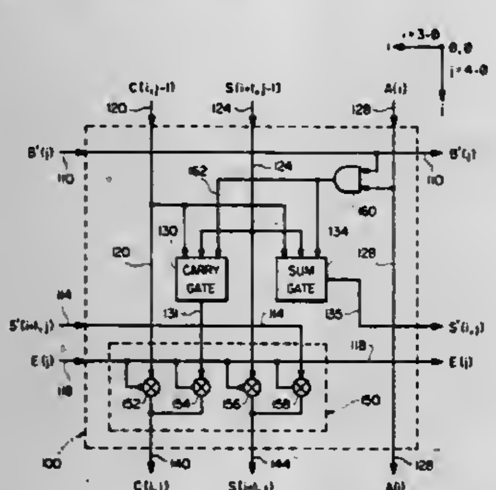

1. Apparatus for multiplying first and second binary operands each having a nominal length of N bits, said first operand represented by first input signals and said second operand represented by second input signals, said apparatus comprising:

an array of adder cells comprising means for providing carry and sum logic signals in response to said first and second binary operands, said array comprising a plurality of said adder cells logically arranged in N columns and at least N+ one rows, said array including product means for providing product output signals at the logical end of each row;

selection logic means coupled to said array of adder cells for selecting N of said N+1 rows by deselecting one of said rows in response to a deselection signal; and

input gating means coupled to said selection logic means for gating in successive order, said ones of said first input signals of said first operand corresponding to said deselected row and the logically succeeding rows to the rows following the deselected one of said N+1 rows.

4,302,820

DUAL LANGUAGE PROGRAMMABLE CONTROLLER

Odo J. Struger, Chagrin Falls; Ronald E. Schultz, Willoughby, both of Ohio, and Barry E. Sammons, Whitefish Bay, Wis., assignors to Allen-Bradley Company, Milwaukee, Wis.

Filed Aug. 20, 1979, Ser. No. 67,798

Int. Cl.³ G05B *19/02*; G06F *9/06*

U.S. Cl. 364—900 11 Claims

1. In a programmable controller having a memory which stores a control program comprised of a plurality of control macroinstructions and a processor which includes a microprocessor, said processor being coupled to said memory and being operable to sequentially read the control macroinstructions from the memory and perform a function indicated by each control macroinstruction by translating it into a set of stored machine instructions which are executed by said microprocessor, the improvement therein comprising:

means coupled to said processor for storing a machine language routine comprised of a unique set of machine instructions, which when executed by said microprocessor carry out a function;

means coupled to said processor for storing an interpreter routine comprised of machine instructions, which when executed by said microprocessor, direct it to:

(a) store the contents of one internal microprocessor register in a selected storage location;

(b) execute said machine language routine;

(c) restore the contents of the internal microprocessor register by transferring said contents from said selected storage location; and

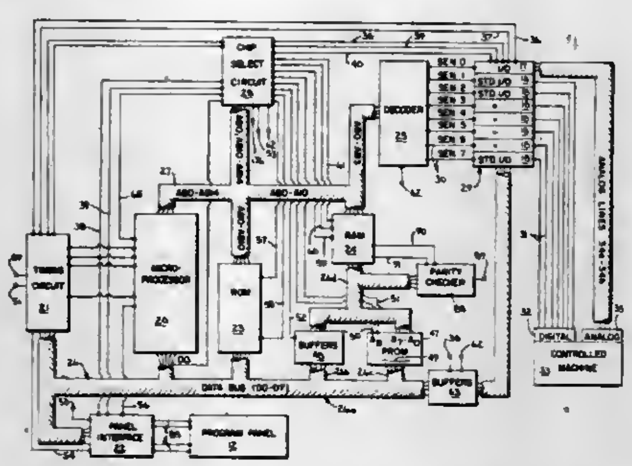

(d) fetch another of said control macroinstructions from said memory; and

translator means coupled to said memory and said processor for sensing a selected one control macroinstruction read from said memory and enabling the microprocessor to execute said stored interpreter routine, whereby the processor executes a control program comprised of both control macroinstructions and said selected one control macroinstruction.

4,302,821

INTERPOSER CONTROL FOR ELECTRONIC POSTAGE METER

Alton B. Eckert, Norwalk; C. Edward Duwel, Trumbull, and Arno Muller, Westport, all of Conn., assignors to Pitney-Bowes, Inc., Stamford, Conn.

Filed Oct. 30, 1979, Ser. No. 89,411

Int. Cl.³ G06F *15/21*

U.S. Cl. 364—900 20 Claims

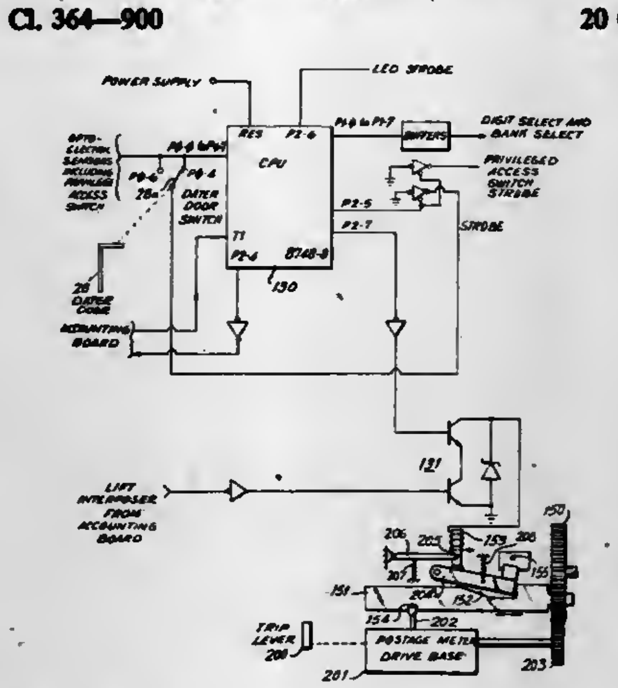

1. In an electronic postal meter having a printing device adapted to be driven by a drive base, a shutter positioned to be movable into and out of block engagement with said printing device by said drive base, interposer means for inhibiting movement of said shutter out of its blocking position, and output circuit means for controlling said interposer means, the improvement wherein said postal meter has first and second control circuit means, a pair of serially connected current controlling devices connected to control said output circuit means, said control circuit means being connected to control separate ones of said current switching devices, said control circuit means being intercoupled to exchange data relating to the operational conditions in said postal meter to provide redundant control of said semiconductor devices.

4,302,822

THIN-FILM MAGNETIC BUBBLE DOMAIN DETECTION DEVICE AND PROCESS FOR MANUFACTURING THE SAME

Sotaro Esho, and Hiroshi Gokan, both of Tokyo, Japan, assignors to Nippon Electric Co., Ltd., Tokyo, Japan

Filed May 8, 1979, Ser. No. 36,983

Claims priority, application Japan, May 12, 1978, 53-56780; Feb. 14, 1979, 54-16667; Feb. 14, 1979, 54-16668

Int. Cl.³ G11C *19/08*

U.S. Cl. 365—8 22 Claims

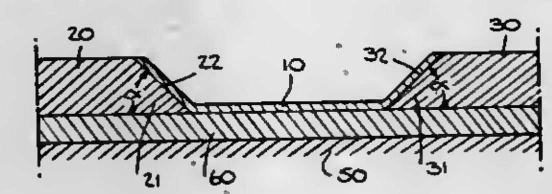

1. A thin-film magnetic bubble domain detection device comprising

a substrate;

a spacer formed on said substrate to cover a surface thereof;

at least two conductor leads each respectively formed on a different surface portion of said spacer, each said conductor lead having an upper surface and a side wall thereon with at least one slope with respect to its respective spacer surface portion; and

a magnetic field sensing element on said spacer having ends each respectively electrically connected to a different one of said conductor leads at said respective slopes thereof without being connected to the upper surface of either conductor lead.

4,302,823

DIFFERENTIAL CHARGE SENSING SYSTEM

John E. Gersbach, Burlington; Ick W. Kim, Essex Junction, and Adolf M. Zeble, North Hero, all of Vt., assignors to International Business Machines Corp., Armonk, N.Y.

Filed Dec. 27, 1979, Ser. No. 108,243

Int. Cl.³ G11C *7/00, 11/40*

U.S. Cl. 365—190 14 Claims

1. A sensing system for memory cell having first and second transistors with first and second diffusion capacitances, respectively, carrying unequal amounts of currents resulting in a charge difference in said diffusion capacitances indicative of stored data comprising:

first and second bit lines connected to said first and second diffusion capacitances, respectively;

means for maintaining said data in said cell;

means for increasing the charge in said first and second diffusion capacitances;

first and second impedances having equal magnitudes connected to said first and second bit lines, respectively;

means including voltage varying means coupled to said first and second impedances for transferring said increased charge in said diffusion capacitance through said first and second impedances; and

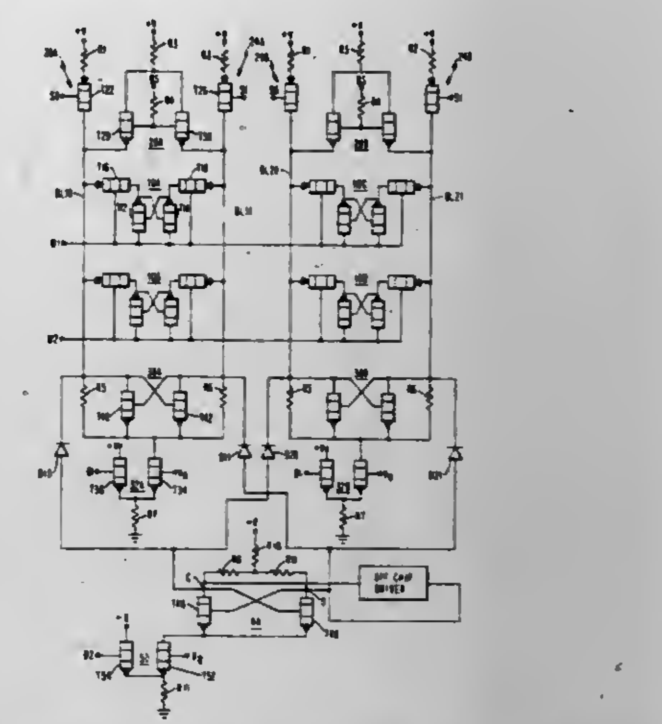

means for sensing a resulting voltage difference across said first and second impedances.

4,302,824

SEISMIC SURVEY APPARATUS

Philip C. Goymour, 1 Gullivers Close, Horley, Banbury, Oxfordshire OX15 6DY, England

Filed Apr. 25, 1980, Ser. No. 143,739

Claims priority, application United Kingdom, Feb. 1, 1980, 455/80

Int. Cl.³ G01V *1/36, 1/38*

U.S. Cl. 367—19 12 Claims

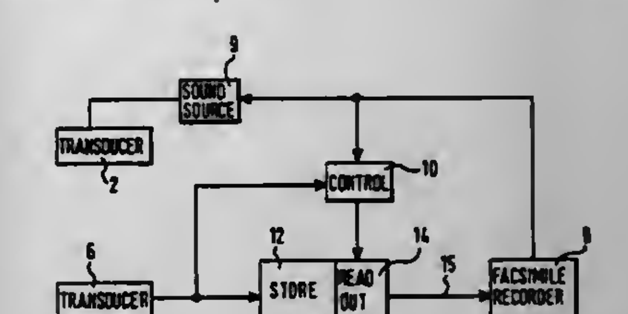

1. Seismic survey apparatus comprising:

(a) means for providing a train of first signals each indicative of the time that a sound wave is transmitted towards the sea bed;

(b) means for providing associated trains of second signals indicative of the time that a sound wave reflected from the sea bed is received;

(c) signal storage means for storing the trains of second signals;

(d) means for deriving from the first and associated second signals a control signal indicative of the apparent vertical movement of the surface of the sea bed due to wave motion or swell; and

(e) means for controlling a read out from the signal storage means in accordance with the control signal to compensate for the apparent vertical movement of the sea bed due to wave motion or swell.

4,302,825
ROTATING ECCENTRIC WEIGHT APPARATUS AND METHOD FOR GENERATING CODED SHEAR WAVE SIGNALS

Otis G. Erich, Jr., La Mirada, Calif., assignor to Union Oil Company of California, Brea, Calif.
Continuation-in-part of Ser. No. 956,613, Nov. 1, 1978, Pat. No. 4,234,053, which is a continuation-in-part of Ser. No. 765,799, Feb. 4, 1977, Pat. No. 4,143,737. This application Feb. 19, 1980, Ser. No. 122,133
Int. Cl.³ G01V *1/36, 1/053, 1/153*
U.S. Cl. 367—41 **12 Claims**

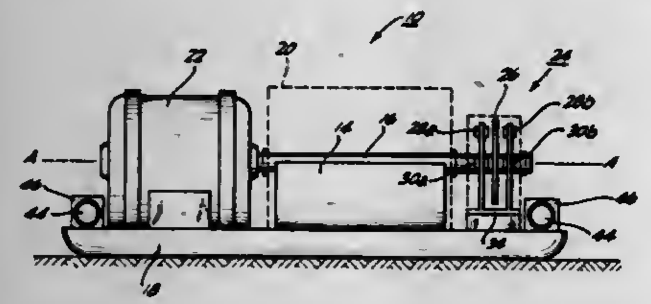

1. A method for the seismic exploration of earth strata underlying an earth surface between a sourcepoint and a receiver location, which comprises:
(a) positioning on said earth surface at said sourcepoint a seismic source having (1) an eccentric element which is rotatable about an axis of rotation and (2) a position sensor comprised of a first sensor element and a second sensor element;
(b) rotating said eccentric element and said first sensor element about said axis of rotation at varying speeds so as to transmit into said earth strata a shear wave signal having a frequency variable code;
(c) positioning said second sensor element at a first selected position about said axis of rotation such that said first sensor element passes in close proximity to said second sensor element at and only at the instant at which the center of mass of said eccentric element passes that angular position about said axis of rotation at which said seismic source develops the peak shear force during each revolution of said eccentric element;
(d) causing one of said first or second sensor elements to generate a shear code signal characterized by a substantially interference-free background and a plurality of discrete pulses, each of said pulses corresponding to one of the instants at which said first sensor element passes in close proximity to said second sensor element;
(e) sensing seismic shear wave energy returning from said earth strata to said receiver location in order to obtain raw shear wave data which is proportional to said seismic energy; and
(f) correlating said raw shear wave data with said shear code signal to thereby form a correlated shear wave trace which is indicative of the structure of said earth strata.

4,302,826
RESONANT ACOUSTIC TRANSDUCER SYSTEM FOR A WELL DRILLING STRING

William H. Kent, Westford, and Peter G. Mitchell, Concord, both of Mass., assignors to Sperry Corporation, New York, N.Y.
Filed Jan. 21, 1980, Ser. No. 114,039
Int. Cl.³ G01V *1/40*
U.S. Cl. 367—82 **5 Claims**

1. A transducer for coupling acoustic signals to a bore-hole drilling string primarily during drilling operations comprising:
piezoelectric means having an electrical capacity C, a first mechanical axis, and adapted for compression and elongation along said first mechanical axis when excited by a variable electric field disposed thereacross,
inductor means having inductance L and coupled in series relation with said piezoelectric means in an electrical circuit having an electrical resonant frequency substantially determined by C and L,
fastener means for affixing said piezoelectric means against a surface of said bore-hole drilling string and for holding said piezoelectric means in substantially fixed compression,

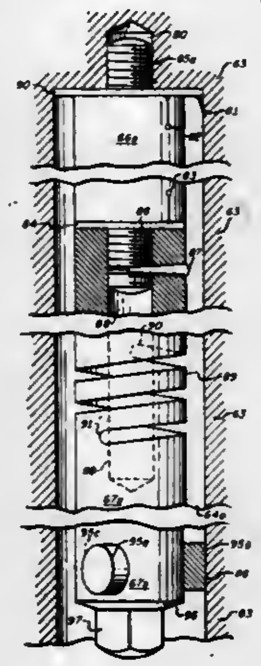

spring means having mass m, spring constant k, and a compression axis collinear with said first axis, extending from and coupled integrally with said fastener means, and
elongate cylindrical mass means having mass M, a cylinder axis collinear with said first axis, and extending from and coupled integrally with said spring means to form a mechanical vibrating circuit having a mechanical resonant frequency that is substantially determined by m, k, and M to be substantially equal to said electrical resonant frequency.

4,302,827
RUNWAY AND OBSTACLE DETECTOR TO IMPROVE AIRPLANE LANDING

Arthur B. Rosenblum, 5620 Morton St., Philadelphia, Pa. 19144
Filed Apr. 8, 1980, Ser. No. 138,645
Int. Cl.³ G01S *15/10*
U.S. Cl. 367—116 **1 Claim**

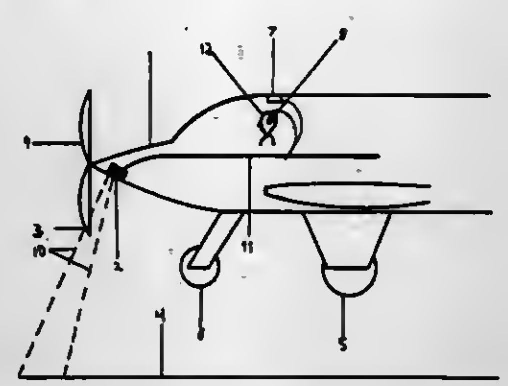

1. An apparatus for a pilot controlled airplane comprising an ultrasonic pulse transmitter; ultrasonic echo detecting means including time measuring means for measuring the interval between a transmitted pulse and its echo; converting means for transforming the measured interval into an altitude signal within a range from one foot to about one hundred feet; means for converting said altitude signal into a variable pitch tone signal in the audible range; a tone generator for producing an intermittent flare tone signal; means providing the pilot with the variable pitch signal and the flare tone signal for indicating the desired flaring altitude; and means for mounting the ultrasonic pulse transmitter and echo detecting means so that the ultrasonic pulses are reflected from the revolving propeller tips, thereby generating an intermittent change in the variable pitch tone signal, thus assuring the pilot that the altitude measuring system is operative.

4,302,828
ELECTRONIC TIMEPIECE

Shigeru Morokawa, Higashiyamato; Fukuo Sekiya, Tokorozawa; Yukio Hashimoto, Ishigami-Niiza; Yasushi Nomura, and Keiichiro Koga, both of Tokorozawa, all of Japan, assignors to Citizen Watch Company Limited, Tokyo, Japan
Division of Ser. No. 626,791, Oct. 29, 1975, Pat. No. 4,150,535. This application Sep. 15, 1978, Ser. No. 943,264
Claims priority, application Japan, Oct. 31, 1974, 49-125801
Int. Cl.³ G04C *17/00, 9/00*
U.S. Cl. 368—69 **2 Claims**

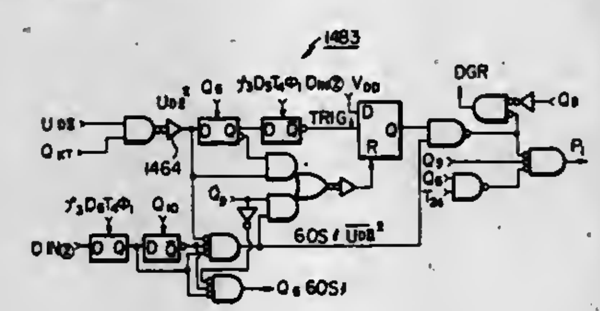

1. An electronic timepiece comprising:
a frequency supply for providing a relatively high frequency timebase signal;
timekeeping circuit means including a frequency converter responsive to said timebase signal for providing a relatively low frequency time unit signal, and timekeeping register means responsive to said time unit signal for providing a plurality of time information signals;
input means including externally actuatable control means for providing an actuation signal when actuated, and circuit means for producing an input signal in response to said actuation signal;
first memory circuit means responsive to an initiation of said input signal for being reset to a condition in which output of a signal therefrom is inhibited;
second memory circuit means responsive to said input signal and to a first one of said time information signals for producing an output signal after a first predetermined time interval following an initiation of said input signal; said first memory circuit being responsive to said output signal from the second memory circuit means for being set to produce an output signal;
circuit means responsive to said input signal and a second one of said time information signals for producing a time delay output signal after a second predetermined time interval following an initiation of said input signal, said second predetermined time interval being of longer duration than said first predetermined time interval;
gate circuit means responsive to said time delay output signal in conjunction with said output signal from the first memory means for producing an enabling signal; and
control circuit means responsive to said enabling signal for controlling said timekeeping circuit means to correct the timing of said time information signals;
whereby an actuation of said externally actuatable control means will result in an enabling signal being produced by said gate circuit means following said second predetermined time interval after initiation of said actuation, but whereby a second actuation of said externally actuatable control means before the termination of said second predetermined time interval will cause said first memory circuit means to be reset, thereby cancelling the generation of said enabling signal.

4,302,829
ELECTRONIC TIMEPIECE

Shigeru Morokawa, Higashiyamato; Fukuo Sekiya, Tokorozawa; Yukio Hashimoto, Ishigami-Niiza; Yasushi Nomura, and Keiichiro Koga, both of Tokorozawa, all of Japan, assignors to Citizen Watch Company Limited, Tokyo, Japan
Division of Ser. No. 626,791, Oct. 29, 1975, Pat. No. 4,150,535. This application Sep. 15, 1978, Ser. No. 943,260
Claims priority, application Japan, Oct. 31, 1974, 49-125801
Int. Cl.³ G04C *19/00;* **G04F** *5/00*
U.S. Cl. 368—82 **8 Claims**

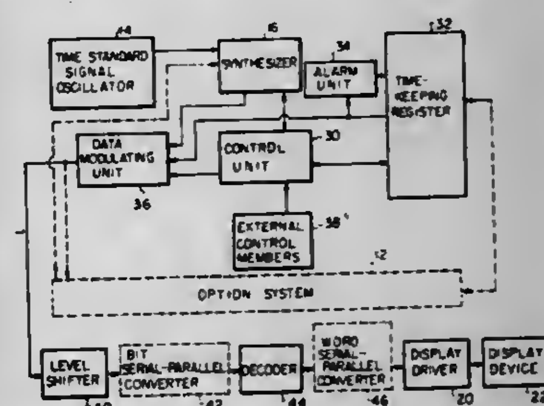

1. An electronic timepiece comprising:
a primary timepiece circuit unit including a frequency supply for providing a relatively high frequency signal, a frequency converter responsive to said relatively high frequency signal for providing a relatively low frequency time unit signal, timing signals, and a plurality of word timing pulses, timekeeping register means including a plurality of shift register stages responsive to said timing signals for dynamic recirculation of data stored in said timekeeping register means, said data comprising current time data and a first set of additional data, said data being stored in a plurality of data storage locations of said timekeeping register such that the contents of each of said data storage locations appear at an output terminal of said timekeeping register means during a time interval corresponding to a predetermined one of said word timing pulses, adder circuit means located in said timekeeping register means and responsive to said time unit signal for periodically updating said current time data, and display means including a plurality of display elements for displaying said time data and said first set of additional data;
a secondary circuit unit including secondary register means comprising a plurality of register stages responsive to said timing signals of said primary timepiece circuit unit for storing data, said data comprising a second set of additional data which is stored in a plurality of data storage locations of said secondary register means such that the contents of each of said data storage locations appear at an output terminal of said secondary register means during a time interval corresponding to a predetermined one of said word timing pulses of said primary timepiece circuit unit; and
control gate means for controlling the transfer of at least a portion of said second set of additional data from said secondary storage register means to said timekeeping register means to thereby replace at least a portion of said first set of additional data.

4,302,830

OPTICAL INFORMATION READING-OUT APPARATUS

Takashi Hamaoka, Hino; Shunpei Tanaka; Toru Musha, both of Hachioji, and Kenichi Oinoue, Tokyo, all of Japan, assignors to Olympus Optical Company Ltd., Tokyo, Japan

Filed May 1, 1979, Ser. No. 35,334

Claims priority, application Japan, May 10, 1978, 53-54366; May 10, 1978, 53-54367; May 30, 1978, 53-63774

Int. Cl.³ G11B *7/00, 21/ 02, 21/16*

U.S. Cl. 369—45 **16 Claims**

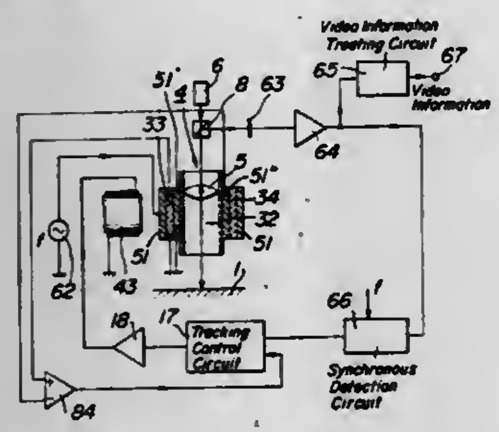

1. An optical information read out apparatus comprising a light source, a record medium including an information track spirally or concentrically recorded thereon, an optical system including an objective lens movably supported by its holding body, said optical system receiving a light from said light source and projecting a read out light spot onto said record medium, and a focusing and tracking mechanism for driving said objective lens so as to correct a relative displacement between said information track and said read out light spot, said mechanism including a first leaf spring having one end connected to said objective lens or its holding body and another end connected to a first supporting member, a second leaf spring having one end connected to said objective lens or its holding body and another end connected to a second supporting member, said first and second leaf springs being symmetrically arranged with respect to an optical axis of said objective lens or a plane inclusive of said optical axis and a track direction, and a pair of opposed electromagnets between which are arranged said first and second leaf springs and said objective lens with or without its holding body, either one or both of said leaf springs and said objective lens holding body being formed of magnetic material.

4,302,831

METHOD AND CIRCUIT ARRANGEMENT FOR CLOCK SYNCHRONIZATION IN THE TRANSMISSION OF DIGITAL INFORMATION SIGNALS

Josef Zemanek, Munich, Fed. Rep. of Germany, assignor to Siemens Aktiengesellschaft, Berlin and Munich, Fed. Rep. of Germany

Filed Jun. 18, 1980, Ser. No. 160,504

Claims priority, application Fed. Rep. of Germany, Jun. 20, 1979, 2924922

Int. Cl.³ H04B *3/36;* H04L *7/08*

U.S. Cl. 375—111 **5 Claims**

1. A method for clock synchronization in the transmission of digital message signals on a two-wire transmission line between a superordinate system, such as a PCM multi-multiplex exchange, and a subordinate system, such as a digital subscriber station, in the form of message signal blocks which comprise at least one message signal word and a prefixed synchronization word, each of said systems having a clock generator for producing a bit clock signal that determines the time relationships within the respective system, the two clock generators of the superordinate and subordinate systems operating plesiochronously to each other, said method comprising the steps at said subordinate system of:

(a) deriving a periodically repeating time group comprising an odd number of directly succeeding time intervals from the bit clock signal of said subordinate system, the time interval occurring at the center of said time group coinciding with a pulse edge of said bit clock signal;

(b) repeatedly deriving a receive pulse from the pulse edge of the first bit of said synchronization words in said message signal blocks received at said subordinate system;

(c) repeatedly determining by phase comparison whether the current receive pulse coincides with one of said time intervals; and

(d) (1) if a prescribed number of successive receive pulses fail to coincide with any of said time intervals, establishing an initial phase equality between said bit clock signal of said subordinate system and said receive pulses;

(d) (2) if a receive pulse coincides with the middle time interval of a time group, leaving the phase of said bit clock signal unchanged;

(d) (3) if a receive pulse coincides with the time interval directly preceding said middle time interval of a time group, shortening the pulse period of said bit clock signal once, and if the next following receive pulse also coincides with the time interval directly preceding said middle time interval of the next following time group, shortening the pulse period of said bit clock signal twice within a transmission period;

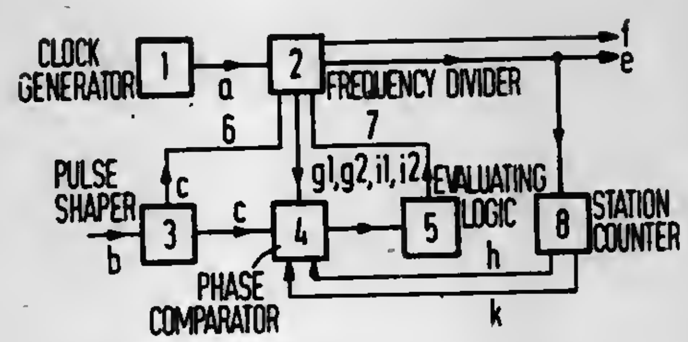

(d) (4) if a receive pulse coincides with the time interval directly following said middle time interval of a time group, lengthening the pulse period of said bit clock signal once, and if the next following receive pulse also coincides with the time interval directly following said middle time interval of the next following time group, lengthening the pnlse period of said bit clock signal twice within a transmission period;

(d) (5) if a receive pulse coincides with one of the time intervals indirectly preceding said middle time interval of a time group, shortening the pulse period of said bit clock signal at least three times within a transmission period upon the first detection of such phase relationship, said number of times depending upon which one of said time intervals said receive pulse coincides with; and

(d) (6) if a receive pulse coincides with one of the time intervals indirectly following said middle time intervals of a time group, lengthening the pulse period of said bit clock signal at least three times within a transmission period upon the first detection of such phase relationship, said number of times depending upon which one of said time intervals said receive pulse coincides with.

4,302,832

RADIAL-TRACKING PROGRAMMABLE RECORD PLAYER WITH RECORD HANDLING DOOR MECHANISM

Robert G. Cheeseboro, 3650 Somerset Dr., Los Angeles, Calif. 90016

Division of Ser. No. 951,563, Oct. 16, 1978, Pat. No. 4,222,574, which is a division of Ser. No. 778,027, Mar. 16, 1977, Pat. No. 4,121,836. This application Jul. 1, 1980, Ser. No. 164,922

Int. Cl.³ G11B *25/04*

U.S. Cl. 369—77 **5 Claims**

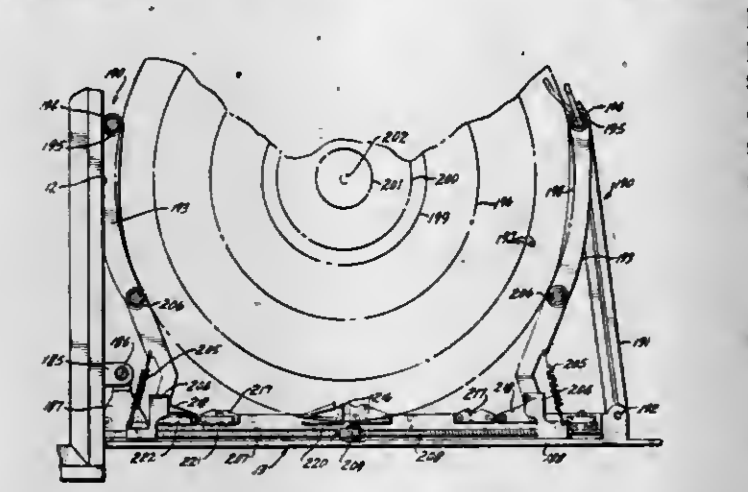

1. A record player in which a phonograph record disc is supported in a playing position on a turntable rotatably drivable at a selected speed about an axis, the disc in its playing position being engageable with a stylus supported by a transducer cartridge held in a carriage which is movable along a line radially of the turntable above the turntable in response to tracking engagement of the stylus in the spiral groove of the disc, the turntable is movable along said axis into and out of a playing position thereof, and the turntable and the carriage are disposed in an enclosing housing, and characterized in that the housing includes a door which is closed when the turntable is in its playing position, the door includes means accessible in an open position of the door for receiving and supporting a record and for disposing a supported record between the turntable and the carriage coaxially above the turntable in the closed position of the door and means interrelating movement of the turntable along said axis and the position of the door.

4,302,833

AUTOMATIC RECORD SIZE DETECTOR

Hiromichi Tanaka; Osamu Imamura, and Akihiro Asada, all of Yokohama, Japan, assignors to Hitachi, Ltd., Tokyo, Japan

Filed Oct. 4, 1979, Ser. No. 82,219

Claims priority, application Japan, Oct. 4, 1978, 53-121514

Int. Cl.³ G11B *3/60*

U.S. Cl. 369—217 **8 Claims**

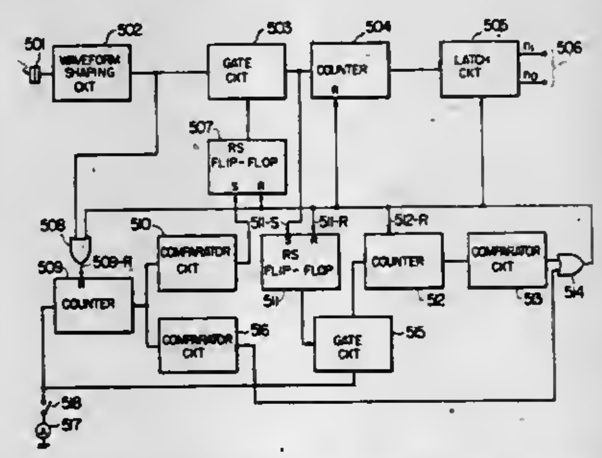

1. An apparatus for automatically detecting one of a plurality of predetermined possible sizes of a disc record, comprising record size detecting means for generating a pulse signal in the form of groups of pulses in which each group has pulses corresponding in number to one of said possible record sizes, first comparator means for producing a control signal when the interpulse time of the pulse signal produced by said record size detecting means exceeds a first set time corresponding to the normal interpulse period between pulses in a pulse group, time measuring means responsive to the output control signal of said first comparator means and said pulse signal for generating an output representing a measuring time period, second comparator means for comparing the measuring time period represented by the output of said time measuring means with a second set time corresponding to the maximum length of a pulse group, counter means for counting said pulses in said pulse signal, said counter being reset by the output of said second comparator means, gate means responsive to the output of said time measuring means for applying said pulse signal to said counter means, and memory means for storing the output signal of said counter means as an indication of said record size.

4,302,834

PHONOGRAPH PICKUP ARM

John Pretto, 624 S. Belmont, Arlington Heights, Ill. 60005

Filed Dec. 26, 1979, Ser. No. 106,685

Int. Cl.³ G11B *3/38*

U.S. Cl. 369—250 **7 Claims**

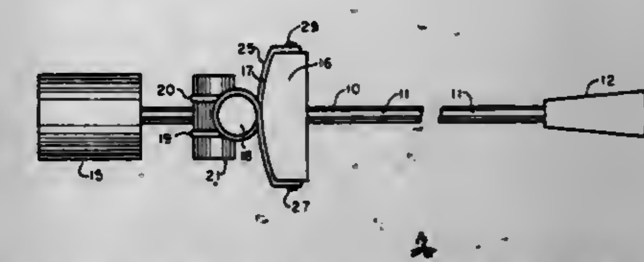

1. A pickup arm assembly for a transducer including stylus means for engaging a spiral trace and detecting prerecorded signals on an associated rotating disc comprising:

a transducer arm positioned for rotational movement parallel to the plane of said rotating disc, including a transducer mounted on one end thereof;

a vertical mounting member mounted adjacent to and perpendicular to the plane of said rotating disc including a curved surface and a cavity centrally located through said vertical mounting member arranged to accept within said cavity said transducer arm;

a vertical support member supporting said transducer arm, including a curved surface mounted against and in communication with said curved surface of said vertical mounting member;

mounting means attached to said vertical mounting member, adapted to retain said vertical support member against and in communication with said curved surface of said vertical mounting member;

said vertical support member arranged to traverse across said curved surface of said vertical mounting member responsive to mechanical force transmitted by said transducer arm as said transducer and stylus means traverse a path in communication with said spiral trace on said rotating disc.

4,302,835

MULTIPLE TERMINAL PASSIVE MULTIPLEXING APPARATUS

Donald H. McMahon, Carlisle, Mass., assignor to Sperry Corporation, New York, N.Y.

Filed Jan. 24, 1980, Ser. No. 114,914

Int. Cl.³ H04J *3/02*

U.S. Cl. 370—4 **8 Claims**

1. A multiple terminal passive multiplexing apparatus comprising:

means for propagating modulated carrier signals in forward and reverse directions;

sensor means sequentially positioned along and coupled to

said propagation means for adding modulation representative of sensed data to said modulated carrier signals, thereby forming modified modulated carrier signals, said sensor means having reflective devices with reflection coefficients that are functions of external sources applied thereto whereby carrier signals propagating along said propagation means incident to said sensor means from said forward direction are reflected therefrom with instantaneous amplitudes representative of instantaneous values of said external sources establishing, for each modulated carrier signal, a sequence of time multiplexed modified modulated carrier signals propagating in said reverse direction;

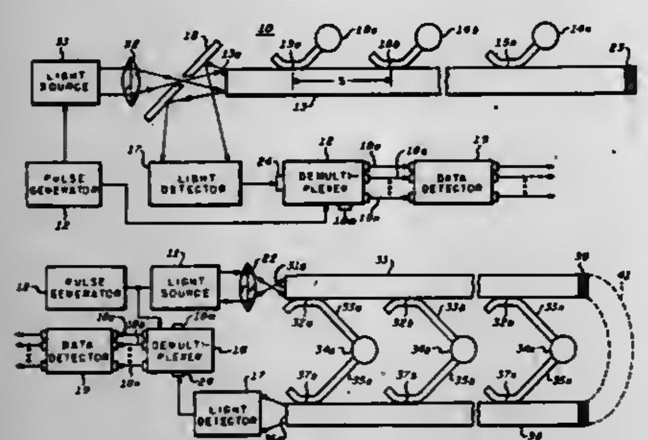

means coupled to receive said sequence of modified modulation carrier signals for detecting said modified modulations, thereby establishing a time division multiplexed sequence of signals having substantially modified modulation waveforms, said sequence of signals being in correspondence with said sequentially positioned sensor means; and

demultiplexing means having a multiplicity of output terminals in correspondence with said sequence of sensor means for receiving said sequence of signals and coupling signals of said sequence of signals to corresponding output terminals.

4,302,836

MONITORING CIRCUIT FOR TIME-DIVISION SWITCHING NETWORK

Jean-Baptiste B. F. Bouvier d'Ivoire, Ville D'Avray; Michel J. B. Canhape, Noisy le Roi, and Jean-Paul Lager, Bougival, all of France, assignors to Le Materiel Telephonique Thomson-CSF, Colombes, France

Filed Nov. 20, 1979, Ser. No. 96,134

Claims priority, application France, Nov. 22, 1978, 78 32905

Int. Cl.³ H04J *3/14*

U.S. Cl. 370—13 **14 Claims**

1. A check device for time-division switching networks establishing communication paths between incoming trunks and outgoing trunks, a processor being provided to produce correspondence data determining the relationship of an incoming trunk channel with an outgoing trunk channel, characterized by the fact that it possesses N check groups, a microprocessor connected to the processor via data queues and under the control of which the N check groups operate simultaneously, a synchronization and multiplexing circuit which connects each check group to all the incoming trunks, and a multiplexing circuit which connects each check group to those outgoing trunks assigned to this group.

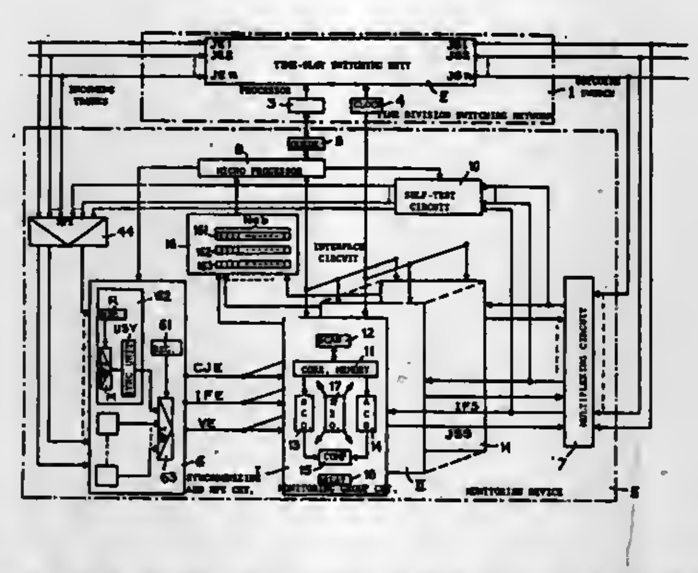

4,302,837

FM MULTIPLEX SYSTEM FOR SELECTIVELY DELAYING ONE OF TWO AUDIO SIGNALS

Shigeo Tanaka, Ichikawa, and Keitaro Yamashita, Tokyo, both of Japan, assignors to Sony Corporation, Tokyo, Japan

Filed Nov. 21, 1979, Ser. No. 96,444

Claims priority, application Japan, Nov. 29, 1978, 53-164741[U]

Int. Cl.³ H04H *5/00;* H04J *1/00*

U.S. Cl. 370—69 **7 Claims**

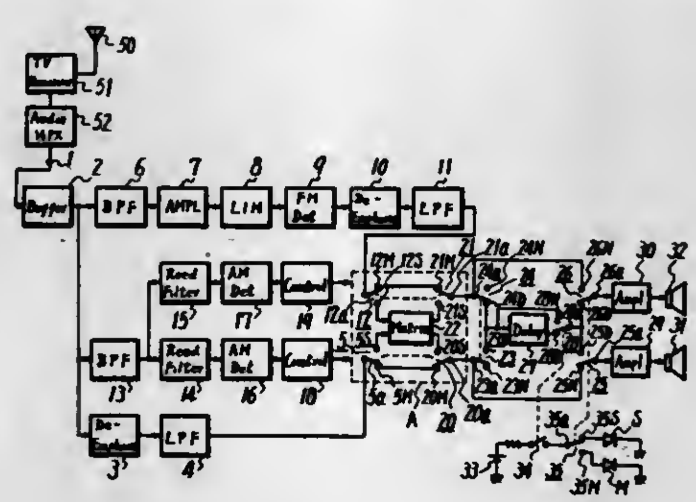

1. A signal delaying apparatus for delaying one of two audio signals reproduced by a multiplex sound demodulating apparatus particularly one of said two audio signals being of one language, another audio signal being of another language corresponding to said one language, comprising a pair of input terminals to which said two audio signals are supplied respectively, means for delaying said one of two audio signals, a pair of output terminals to be connected to a pair of speakers, respectively, and at which said one of two audio signals and another audio signal is obtained.

4,302,838

APPARATUS FOR SYNCHRONIZING AN INPUT SIGNAL WITH A TIME MULTIPLEXED SIGNAL

Kai Y. Eng, Parlin, and Barin G. Haskell, Tinton Falls, both of N.J., assignors to Bell Telephone Laboratories, Incorporated, Murray Hill, N.J.

Filed Mar. 3, 1980, Ser. No. 126,401

Int. Cl.³ H04J *3/06*

U.S. Cl. 370—100 **6 Claims**

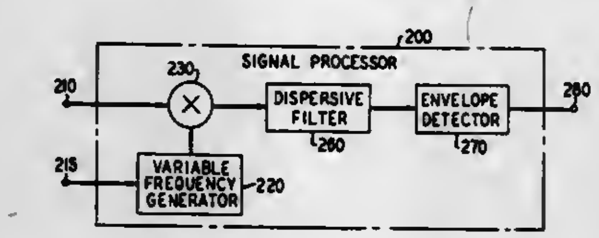

1. A signal processor including an input terminal (210) adapted to receive an input signal, means for synchronizing said input signal with a time multiplexed signal, and means for extending said synchronized input signal to an output terminal (280) and characterized in that said signal processor further comprises:

means (220) responsive to a delay control signal, said control signal extended from a control terminal (215) for identifying a determinable relationship between said input signal and said multiplexed signal, for providing a signal of first frequency;

means (230) for modulating said input signal with said first frequency signal;

means (260) responsive to said modulated signal for introducing a first delay to said modulated signal; and

means (270) responsive to said delay introduced signal for extracting said input signal and for extending said input signal to said output terminal whereby said input signal is synchronized to said multiplexed signal.

4,302,839

MULTIPLEX UNIT WITH MEANS FOR RESPONDING TO SIGNAL LOSS IN ONE OR MORE CHANNELS

Horst Mueller, Hohenschaeftlarn, Fed. Rep. of Germany, assignor to Siemens Aktiengesellschaft, Berlin & Munich, Fed. Rep. of Germany

Filed Oct. 9, 1979, Ser. No. 82,696

Claims priority, application Fed. Rep. of Germany, Oct. 27, 1978, 2846960

Int. Cl.³ H04J *3/07, 3/14*

U.S. Cl. 370—102 **6 Claims**

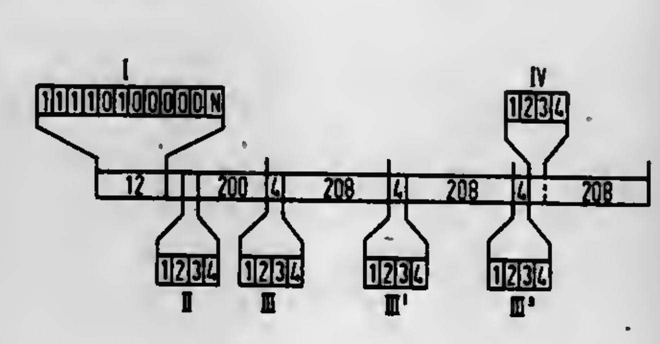

1. In a multiplex unit for interleaving plesiochronous signals in plural channels with justification signals for accommodating variations in the pulse repetition rate of incoming channels, the combination comprising; a monitoring unit for monitoring signals in said channels and for producing a signal in response to the loss of signals in one or more of said channels, means for generating synthetic justification information, means for generating an alarm indication signal, and change-over means responsive to said monitoring unit for inserting said synthetic justification information and said alarm indication signal into the output signal of said multiplex unit in place of signals in said one or more channels.

4,302,840

Patent Not Issued For This Number

4,302,841

MOTOR VEHICLE ELECTRICAL SYSTEM

James M. McCulloch, Birmingham, England, assignor to Lucas Industries Limited, Birmingham, England

Filed Dec. 18, 1979, Ser. No. 105,045

Claims priority, application United Kingdom, Dec. 22, 1978, 49766/78

Int. Cl.³ G06F *11/14*

U.S. Cl. 371—70 **3 Claims**

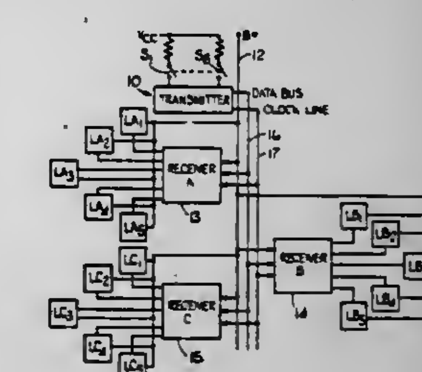

1. An automotive vehicle electrical system including:

a plurality of control switches;

means sensitive to the states of the control switches for producing a sequence of digital words each containing, in order, first, second, third and fourth codes, the first code being an address code, the second code being a code bearing a first predetermined relationship to the address code, the third code being a command code and the fourth code bearing a second predetermined relationship to the command code, one of said first and second predetermined relationships being an inverse relationship and the other of said first and second predetermined relationships being a repetition relationship; and

a plurality of receivers distributed around the vehicle, each having an address code and each including an input register connected to receive data from the producing means, an output register for controlling a plurality of loads, an intermediate register, means for transferring the contents of the input register to the intermediate register, first comparator means for comparing the contents of the input register with the contents of the intermediate register,

second comparator means for comparing the contents of one of the input and intermediate registers with the receiver address code, means operable only when said first comparator means indicates that the contents of the input and intermediate registers are in said first predetermined relationship and said second comparator means indicates that the contents of said one register match the receiver address code for permitting continued clocking of data into the input register, and means for transferring the contents of the intermediate register to the output register when the first comparator means indicates that the contents of the input and intermediate registers are in said second predetermined relationship, whereby the receiver operates to control the associated loads in accordance with the command code included in the same word as its address code.

4,302,842

DIGITAL RADIO REPEATER WITH REGENERATOR

Alain Hurlan, Paris, France, assignor to Thomson-CSF, Paris, France

Filed Oct. 24, 1979, Ser. No. 88,099

Claims priority, application France, Oct. 31, 1978, 78 30850

Int. Cl.[3] H04B 3/36; H04L 27/22

U.S. Cl. 375—3 4 Claims

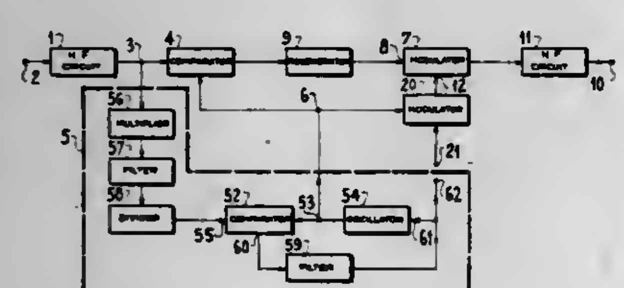

1. A radio repeater transmitting a carrier signal modulated in phase, with n phase states, by a digital signal and in angle by operating signals and comprising in series a phase demodulator, a digital signal regenerating device and a phase modulator with n phase states having a modulation input and a carrier signal input, the phase demodulator being a coherent demodulator comprising a phase comparator having a first input receiving the modulated carrier signal and a second input, a carrier recovery circuit having an input and an output respectively connected to the first and second inputs of the comparator, the pass band of the carrier regenerating circuit being at least equal to the frequency spectrum due to the angle modulation by the operating signals, and the recovery circuit output also being connected to the carrier signal input of the phase modulator.

4,302,843

METHOD AND APPARATUS FOR MEASURING TRANSMISSION CHARACTERISTICS OF A TEST OBJECT DURING COMMUNICATION GAPS

Karl Bauerafeind, Zorneding; Gerhard Blaess, Olching, and Alfred Heindl, Poecking, all of Fed. Rep. of Germany, assignors to Siemens Aktiengesellschaft, Berlin & Munich, Fed. Rep. of Germany

Filed Nov. 23, 1979, Ser. No. 96,665

Claims priority, application Fed. Rep. of Germany, Dec. 6, 1978, 2852805

Int. Cl.[3] H03K 13/32; H04B 17/00; H04Q 1/20

U.S. Cl. 375—10 15 Claims

1. A method of measuring the transmission characteristics of a transmission line by applying a test pulse to an input to the transmission line and evaluating, by Fourier analysis, the deformation of the test pulse as it is produced at an output of the

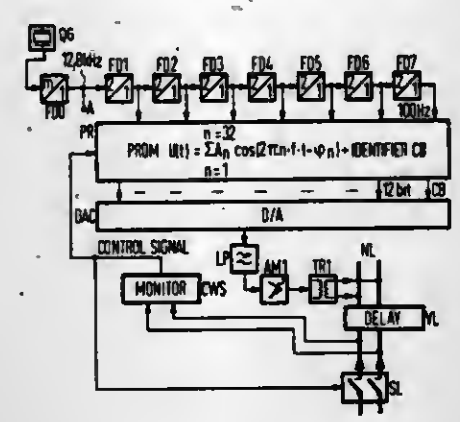

transmission line, said test pulse being formed of a plurality of components having a preselected number of different frequencies and predetermined amplitudes and initial phase angles, and formed according to the equation:

$$V(t) = \sum_{1}^{n} A_n \cos(2\cdot\pi\cdot f\cdot t - \phi_n)$$

where A_n is the amplitude of the nth component and ϕ_n is the initial phase angle of component n, such component having a frequency equal to n.f, including the steps of continuously monitoring the transmission line at its input for a communication gap, signalling the appearance of said gap, transmitting an identifier and a test pulse over said transmission line during said signalled communication gap, continuously monitoring the transmission line at an output for said identifier, and evaluating said test pulse at said output subsequent to the detection of said identifier.

4,302,844

CARRIER TRANSMISSION THROUGH HARMONIC POLLUTED MEDIUM

Warren B. Bruene, Dallas, Tex., assignor to Rockwell International Corporation, El Segundo, Calif.

Filed Mar. 19, 1979, Ser. No. 21,529

Int. Cl.[3] H04J 1/12; H04B 15/00

U.S. Cl. 375—58 12 Claims

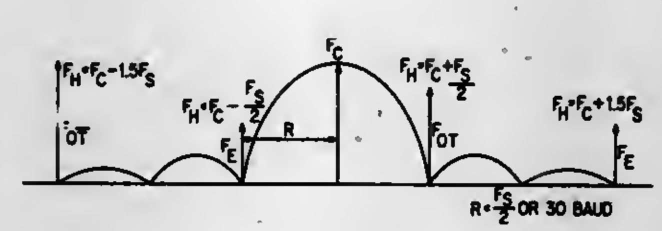

1. Apparatus for transmitting digital data by carrier signal through a medium polluted with harmonic signals, whereby the harmonics may be nulled in the receiver detector, comprising:

means for generating a carrier signal whose frequency is asymmetrically positioned between two of the adjacent harmonics, and

means for modulating the carrier signal with digital data at a baud rate so that the spectral density nulls of the modulated carrier signal in the frequency domain coincide with said two adjacent harmonics.

4,302,845

PHASE-ENCODED DATA SIGNAL DEMODULATOR

Michael J. McClaughry, Cary, and John P. Byrns, Hoffman Estate, both of Ill., assignors to Motorola, Inc., Schaumburg, Ill.

Filed Feb. 7, 1980, Ser. No. 119,350

Int. Cl.[3] H03D 3/18; H04L 27/22

U.S. Cl. 375—82 14 Claims

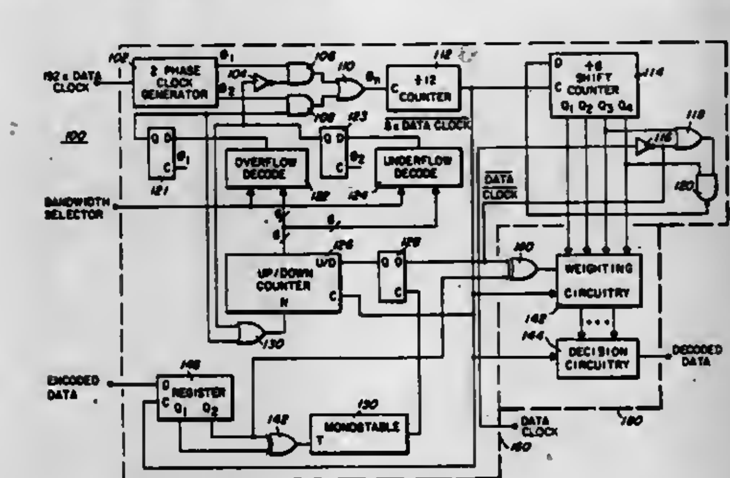

1. A demodulator for a phase-encoded data signal transmitted by a signal source at a predetermined bit frequency, comprising:

means for generating a data clock signal, having successive cycle intervals at the predetermined bit frequency, and phase locking the generated data clock signal to the phase reversals of the phase-encoded data signal;

means for multiplying the phase-encoded data signal and the data clock signal to provide an output signal having first and second states;

means for sampling the state of the multiplying means output signal a predetermined number of times during each clock cycle interval to provide successive samples of the multiplying means output signal;

means for weighting each sample of the multiplying means output signal occurring in the first half of each clock cycle interval according to corresponding predetermined weighting factors, and weighting each sample of the multiplying means output signal occurring in the second half of each clock cycle interval according to corresponding predetermined weighting factors; and

means for totalizing the weighted samples of the multiplying means output signal for each clock cycle interval and providing a decoded data signal having a first state for each clock cycle interval where the magnitude of the totalized samples is at least as great as a predetermined threshold magnitude, and having a second state for each clock cycle interval where the magnitude of the totalized samples is less than the predetermined threshold magnitude.

4,302,846

MARKER TAG FOR A DETECTION SYSTEM

James H. Stephen, 35 Appleford Dr., Abingdon, Oxfordshire, and John D. McCann, 6 Stonebridge Rd., Steventon, Abingdon, Oxfordshire, both of England

Filed Apr. 24, 1978, Ser. No. 899,422

Claims priority, application United Kingdom, Aug. 19, 1977, 34861/77

Int. Cl.[3] G01S 2/18

U.S. Cl. 455—19 10 Claims

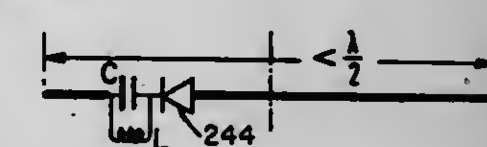

1. A receptor reradiator for use in a system for detecting the position of said receptor reradiator in a surveillance zone, the system transmitting a first frequency signal f_1 and a second frequency signal f_2, so that said first and second signals define a center frequency $f_c=(f_1+f_2)/2$, comprising:

a dipole antenna having two metal conductive arms of a total length slightly less than half the wave length of the center frequency signal f_c, said two arms coming together at a point defining the electrical center of the dipole;

a non-linear semiconductor element disposed in one of said arms and offset from the electrical center of said dipole; and

a parallel combination of a capacitance and inductance inserted in the arm containing the semiconductor element and tuned to receive said first and second frequency signals, so that said non-linear semiconductor element causes said dipole to reradiate an intermodulation signal generated by the first and second RF signals.

DESIGN PATENTS

GRANTED NOV. 24, 1981

ERRATA

For CLASS	See PATENT NO.
D34–033	262,008
D34–033	262,010
D32–023	262,029

DESIGNS

NOVEMBER 24, 1981

261,945
CLEATED BOOT ATTACHMENT
Michael J. Carey, 4045 Third Ave., San Diego, Calif. 92103
Filed Oct. 1, 1979, Ser. No. 80,290
Term of patent 14 years
Int. Cl. D2—*04*
U.S. Cl. D2—317

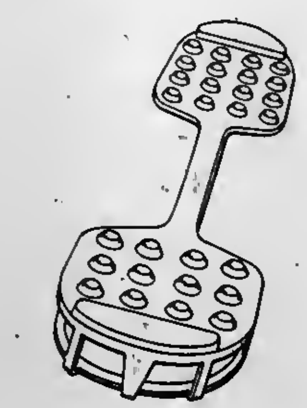

261,946
LADIES' PLATFORM SHOE SOLE
Harrison S. Trask, Nashville, Tenn., assignor to Genesco, Inc., Nashville, Tenn.
Filed Sep. 24, 1979, Ser. No. 78,610
Term of patent 14 years
Int. Cl. D2—*04*
U.S. Cl. D2—322

261,947
PULL TAB FOR A SLIDE FASTENER
Merton E. Moore, Meadville, Pa., assignor to Textron Inc., Providence, R.I.
Filed Jan. 11, 1979, Ser. No. 2,636
Term of patent 14 years
Int. Cl. D2—*07*
U.S. Cl. D2—415

261,948
CONTAINER FOR LIQUIDS
Mark S. McConville, 3625 N. Main St., Soquel, Calif. 95023
Filed Mar. 5, 1979, Ser. No. 17,423
Term of patent 7 years
Int. Cl. D3—*99*
U.S. Cl. D3—30.1

261,949
GOLF CLUB CARRIER
John L. Findeisen, 11026 S. Avenue L, Chicago, Ill. 60617
Division of Ser. No. 667,902, Mar. 17, 1976, Pat. No. Des. 248,979. This application Aug. 14, 1978, Ser. No. 933,733
Term of patent 14 years
Int. Cl. D3—*99*
U.S. Cl. D3—37

261,950
CASE FOR A DRY SHAVER
Michael T. Jankowski, Stiphout, Netherlands, assignor to U.S. Philips Corporation, New York, N.Y.
Continuation-in-part of Ser. No. 751,352, Dec. 16, 1976, abandoned. This application Aug. 24, 1979, Ser. No. 69,460
Claims priority, application Benelux Designs Convent, Jun. 29, 1976, 51142-00
Term of patent 14 years
Int. Cl. D3—*02*
U.S. Cl. D3—39

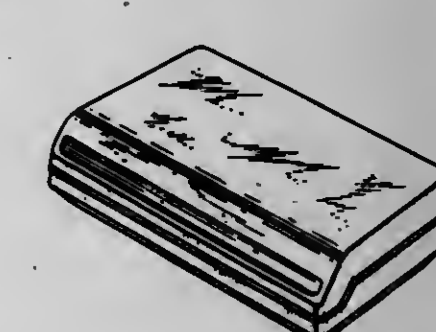

261,951
ADJUSTABLE CHAIR
Bo Ekelund, Stockholm, Sweden, assignor to International Standard Electric Corporation, New York, N.Y.
Filed Dec. 6, 1978, Ser. No. 966,826
Term of patent 14 years
Int. Cl. D6—*01*
U.S. Cl. D6—22

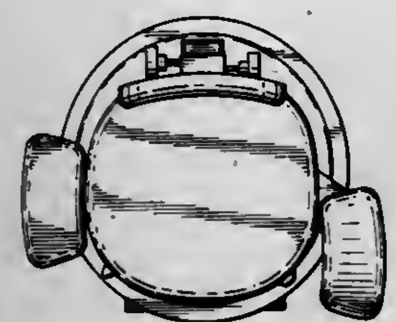

261,952
LOUNGE CHAIR
Pat R. Valdez, 1135 Church St., Apt. 3, San Francisco, Calif. 94114
Filed Apr. 5, 1979, Ser. No. 27,308
Term of patent 14 years
Int. Cl. D6—*01*
U.S. Cl. D6—37

261,953
CHAIR
Robert J. Aronowitz, New York, and Bernard D. Katzanek, Brooklyn, both of N.Y., assignors to Robert Bernard Associates, Brooklyn, N.Y.
Filed Sep. 12, 1979, Ser. No. 74,601
The portion of the term of this patent subsequent to Nov. 24, 1995, has been disclaimed.
Term of patent 14 years
Int. Cl. D6—*01*
U.S. Cl. D6—47

261,954
CHAIR
Robert J. Aronowitz, New York, and Bernard D. Katzanek, Brooklyn, both of N.Y., assignors to Robert Bernard Associates, Brooklyn, N.Y.
Filed Sep. 12, 1979, Ser. No. 74,608
The portion of the term of this patent subsequent to Nov. 24, 1995, has been disclaimed.
Term of patent 14 years
Int. Cl. D6—*01*
U.S. Cl. D6—47

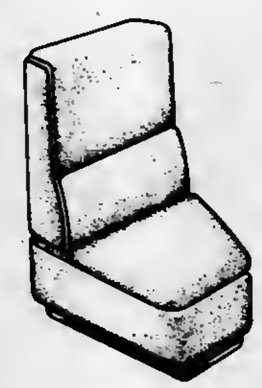

261,955
CHAIR
Robert J. Aronowitz, New York, and Bernard D. Katzanek, Brooklyn, both of N.Y., assignors to Robert Bernard Associates, Brooklyn, N.Y.
Filed Sep. 12, 1979, Ser. No. 74,610
The portion of the term of this patent subsequent to Nov. 24, 1995, has been disclaimed.
Term of patent 14 years
Int. Cl. D6—*01*
U.S. Cl. D6—47

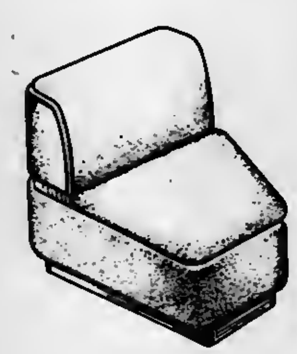

261,956
MOTOR CYCLE SEAT
Winston Flood, 501 N. Venice Blvd., Venice, Calif. 90291
Filed Nov. 8, 1979, Ser. No. 92,564
Term of patent 14 years
Int. Cl. D6—*01*
U.S. Cl. D6—48.1

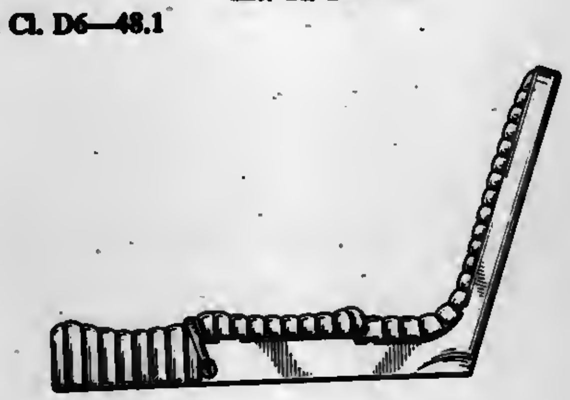

261,957
ARMCHAIR
Karl Lübke, Rheda, Fed. Rep. of Germany, assignor to Lübke GmbH & Co. KG., Rheda, Fed. Rep. of Germany
Filed Jun. 29, 1978, Ser. No. 920,359
Claims priority, application Fed. Rep. of Germany, Jan. 14, 1978, 1061
The portion of the term of this patent subsequent to Mar. 31, 1995, has been disclaimed.
Term of patent 14 years
Int. Cl. D6—*01*
U.S. Cl. D6—73

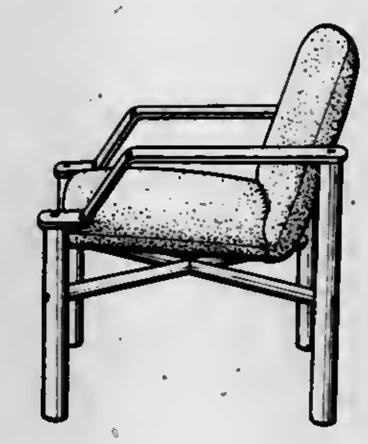

261,958
CHAIR
Bruce Dowse, Rockdale, Australia, assignor to Dowse Designs Pty. Limited, New South Wales, Australia
Filed Dec. 12, 1978, Ser. No. 968,824
Claims priority, application New Zealand, Jun. 13, 1978, 15534
Term of patent 14 years
Int. Cl. D6—*01*
U.S. Cl. D6—73

261,959
WALL MOUNTED HORIZONTAL SUPPORT FRAME
Sidney J. Shames, 57 Holly Pl., Briarcliff Manor, N.Y. 10510, and Harold Shames, 5 Agnes Cir., Ardsley, N.Y. 10502
Filed Apr. 4, 1980, Ser. No. 137,354
Term of patent 14 years
Int. Cl. D23—*02;* D8—*08;* D6—*06*
U.S. Cl. D6—86

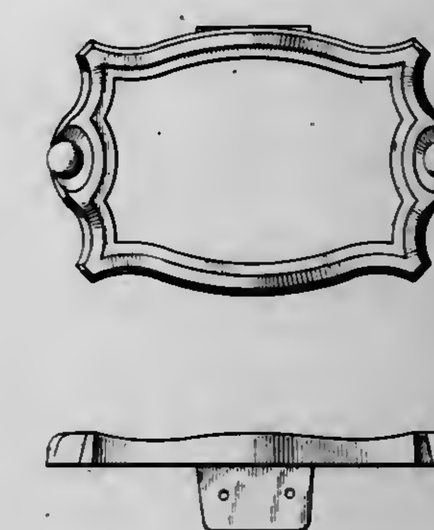

261,960
RACK FOR UTILITY, TELEPHONE AND POWER CABLES OR THE LIKE
Lyle H. Mathews, 2141 Shannon Way, Mesa, Ariz. 85205
Filed Jul. 1, 1980, Ser. No. 165,068
Term of patent 14 years
Int. Cl. D6—*04;* D8—*08*
U.S. Cl. D6—114

261,961
MULTIPLE CASSETTE CARTRIDGE HOLDER
Arthur R. Goldammer, 3439 Peck Ave., San Pedro, Calif. 90731
Filed Nov. 13, 1978, Ser. No. 959,709
Term of patent 14 years
Int. Cl. D6—*06*
U.S. Cl. D6—130

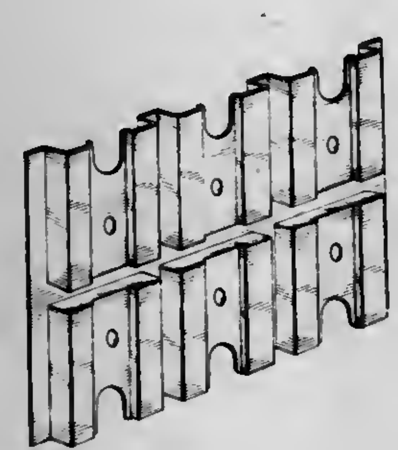

261,962
TRIPLE DRESSER OR SIMILAR ARTICLE
David M. Handel, South Orange, N.J., assignor to The Bennington Company, Union, N.J.
Filed Feb. 13, 1978, Ser. No. 877,449
Term of patent 14 years
Int. Cl. D6—*04*
U.S. Cl. D6—154

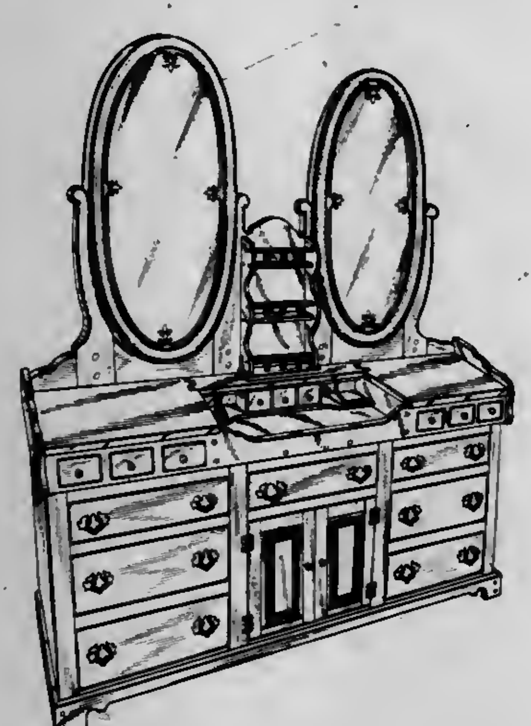

261,963
AUDIO-VISUAL CARREL
Griffith C. Miller, 1024 N. Flood, Norman, Okla. 73069
Filed Sep. 27, 1978, Ser. No. 946,523
Term of patent 14 years
Int. Cl. D06—*05*
U.S. Cl. D6—157

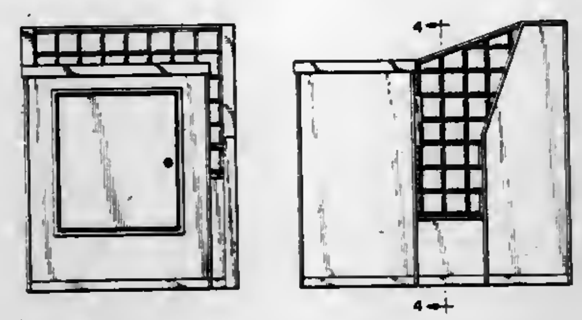

261,964
MODULAR CABINET
Raymond C. Stewart, 1945 E. Merced, West Covina, Calif. 91791
Filed Oct. 11, 1978, Ser. No. 950,476
Term of patent 14 years
Int. Cl. D06—*04*
U.S. Cl. D6—158

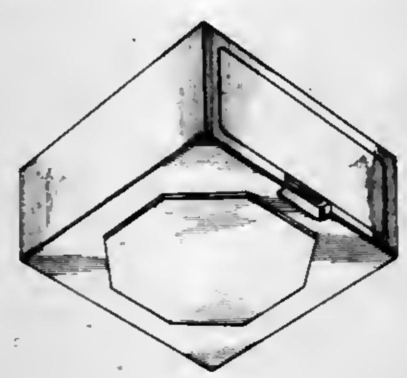

261,965
DESK OR SIMILAR ARTICLE
Eric Naor, 195 Brookfield Ave., Mount Royal, Montreal, Quebec, Canada
Filed Jul. 9, 1979, Ser. No. 55,649
Term of patent 7 years
Int. Cl. D06—*04*
U.S. Cl. D6—161

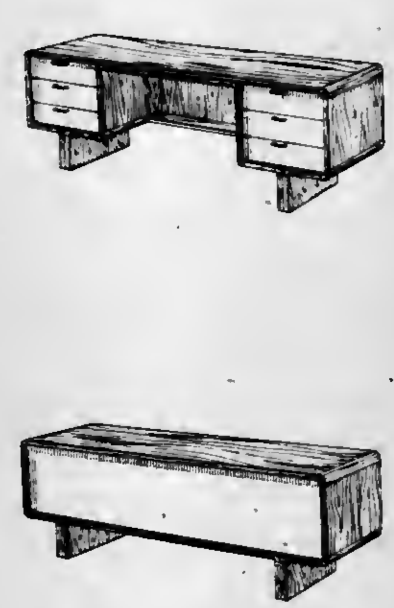

261,966
CABINET FOR A VIDEO SYSTEM
Roger Rex, Hales Corners, Wis., assignor to Display Corporation International, Milwaukee, Wis.
Filed Feb. 26, 1979, Ser. No. 15,483
Term of patent 14 years
Int. Cl. D06—*04*
U.S. Cl. D6—167

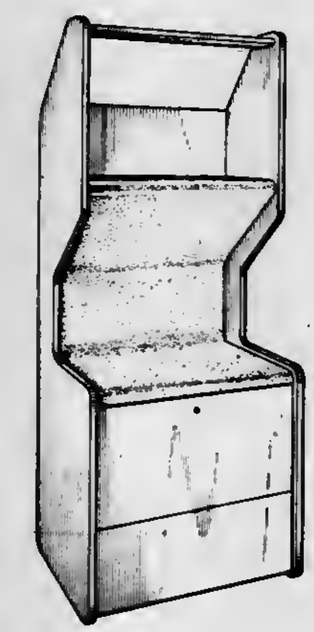

261,967
DISPLAY CABINET
Robert Drapeau, Berwyn, Ill., assignor to Chicago Show Printing Company, Morton Grove, Ill.
Filed Jun. 22, 1978, Ser. No. 918,169
Term of patent 14 years
Int. Cl. D20—*02*; D6—*04*
U.S. Cl. D6—172

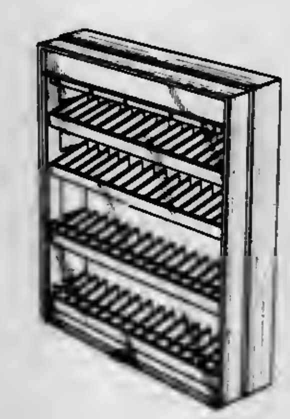

261,968
SIDE FRAME FOR A CHAIR
John W. Caldwell, 1829 Warwick Rd., San Marino, Calif. 91108
Filed Jun. 11, 1979, Ser. No. 47,479
Term of patent 14 years
Int. Cl. D6—*06*
U.S. Cl. D6—192

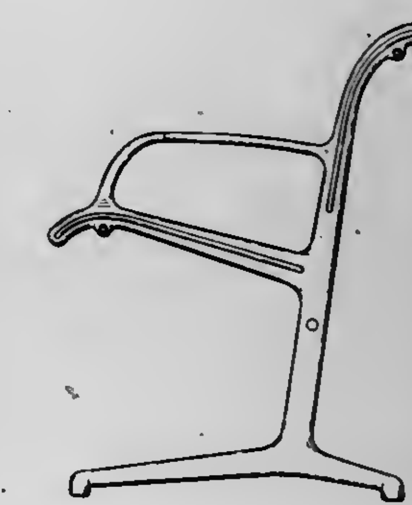

261,969
COMBINED CAFE CURTAIN AND VALANCE
Merrill J. Gitkin, Totowa, N.J., assignor to Jencraft Corporation, Totowa, N.J.
Filed Jan. 31, 1979, Ser. No. 8,843
Term of patent 14 years
Int. Cl. D6—*10*
U.S. Cl. D6—205

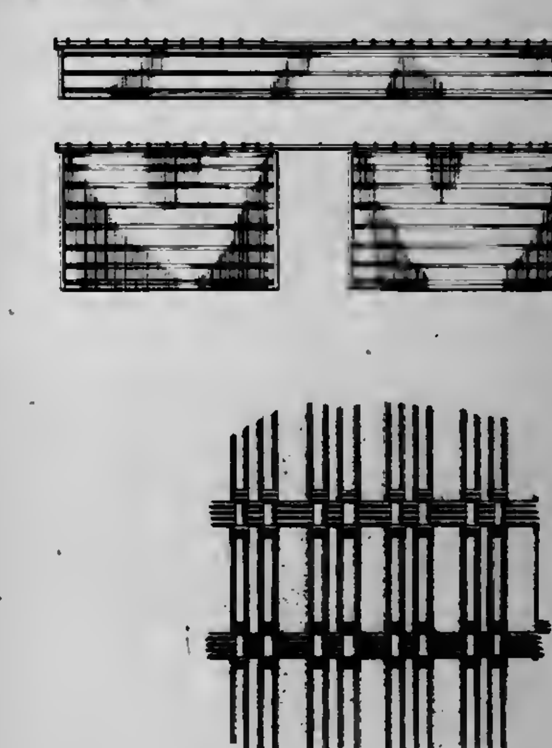

261,970
DISPLAY DEVICE
Thomas J. Alexandris, Cranbury, N.J.; D. Michael Williams, Moris Heights, Canada, and Philip Johnson, Hopewell, N.J., assignors to Johnson & Johnson, New Brunswick, N.J.
Filed Mar. 8, 1978, Ser. No. 884,653
Term of patent 14 years
Int. Cl. D6—*07*
U.S. Cl. D6—235

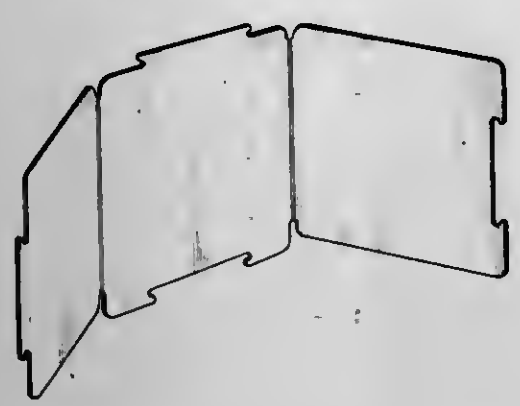

261,971
COOKING DISH
Glenn F. Wokeck, Geneva, Mich., assignor to Bangor Plastics, Inc., Bangor, Mich.
Filed Sep. 4, 1979, Ser. No. 72,379
Term of patent 14 years
Int. Cl. D07—*02*
U.S. Cl. D7—94

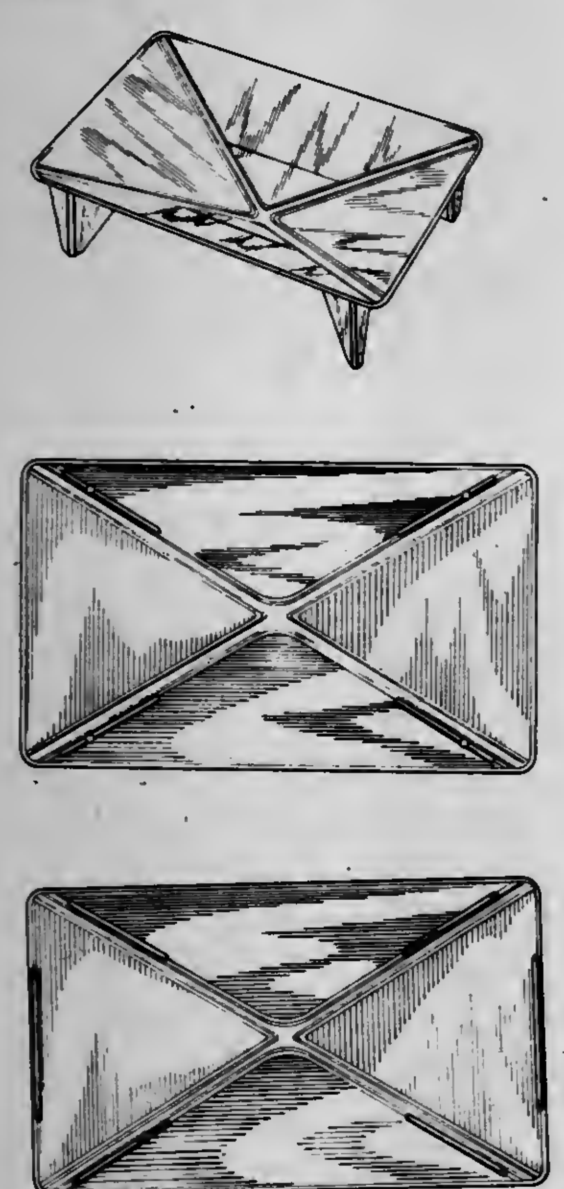

261,972
SCOOP
Albert H. Torongo, Yardley, Pa., and Thomas B. Aldrich, III, Spring Valley, N.Y., assignors to The Procter & Gamble Company, Cincinnati, Ohio
Filed Oct. 17, 1979, Ser. No. 85,559
Term of patent 14 years
Int. Cl. D07—*99*
U.S. Cl. D7—100

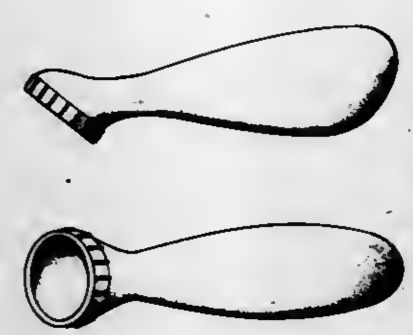

261,973
MAGNETIC HAND TOOL FOR HANDLING METALLIC CANNING LIDS, RINGS AND THE LIKE
Marcia C. Grover, 5666 105th St., Pullman, Mich. 49450
Filed Oct. 22, 1979, Ser. No. 87,173
Term of patent 14 years
Int. Cl. D07—*99*; D13—*99*
U.S. Cl. D7—102

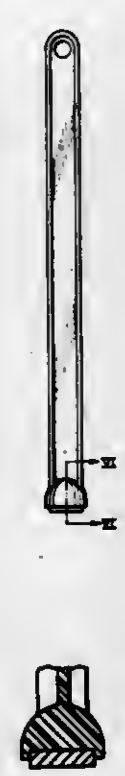

261,974
OYSTER KNIFE OR SIMILAR ARTICLE
E. Steven Pickman, 209 Montowese St., Branford, Conn. 06405
Filed Sep. 12, 1979, Ser. No. 74,900
Term of patent 14 years
Int. Cl. D07—*03*
U.S. Cl. D7—106

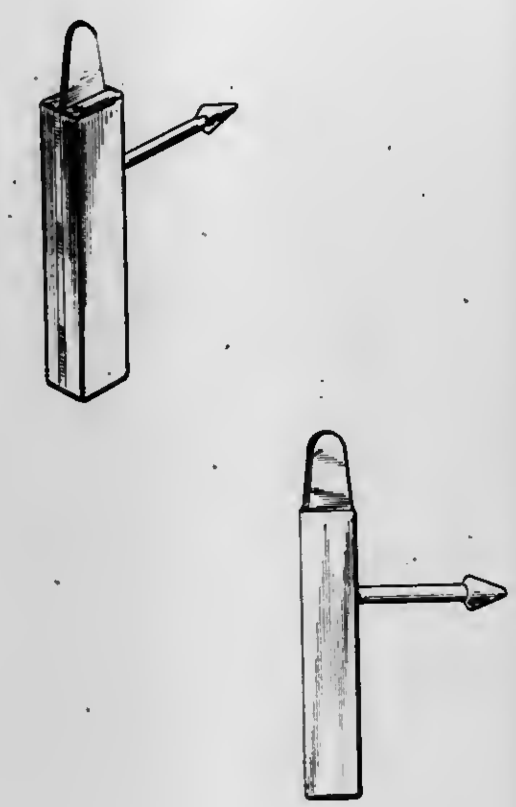

261,975
SMOKER
Thomas P. Sauls, P.O. Box 1138, Dunnellon, Fla. 32630
Filed Feb. 23, 1979, Ser. No. 14,711
Term of patent 14 years
Int. Cl. D7—*02*; D25—*03*
U.S. Cl. D7—107

261,976
HANDLE OR THE LIKE
Rino Conti, Stoughton, Mass., assignor to Dart Industries Inc., Los Angeles, Calif.
Filed Jan. 16, 1980, Ser. No. 112,662
Term of patent 14 years
Int. Cl. D7—*02*
U.S. Cl. D7—132

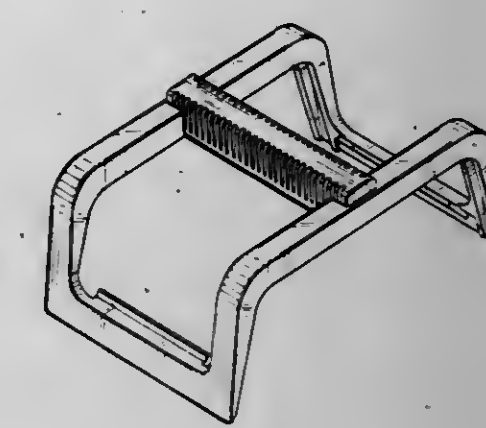

261,977
ORGANIZER RACK FOR STORAGE OF FIREWOOD, KINDLING, NEWSPAPER AND FIREPLACE TOOLS
Hal E. Martin, Box 964, Riverside Dr., and Jimmy H. Erskine, P.O. Box 415, both of, Omak, Wash. 98841
Filed Dec. 14, 1979, Ser. No. 103,599
Term of patent 14 years
Int. Cl. D7—*08*
U.S. Cl. D7—212

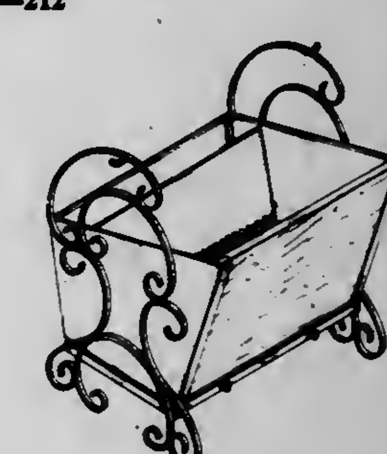

261,978
HAND TOOL
Lloyd T. Smith; Alan E. Bartholomew, both of Newton; Robert W. Fee; Michael L. Meister, both of Wichita; Richard J. Robbins, Derby, and Richard E. Ten Eyck, Wichita, all of Kans., assignors to S/V Tool Company, Inc., Newton, Kans.
Filed Oct. 18, 1979, Ser. No. 86,086
Term of patent 14 years
Int. Cl. D8—*04*
U.S. Cl. D8—82

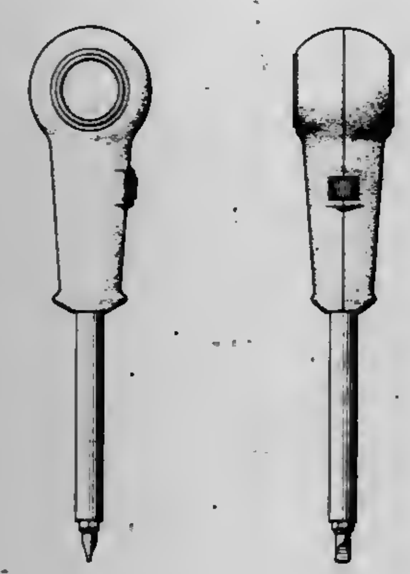

261,979
TOOL FOR TURNING SCREWS AND THE LIKE
Lloyd T. Smith; Alan E. Bartholomew, both of Newton; Robert W. Fee; Michael L. Meister, both of Wichita; Richard J. Robbins, Derby, and Richard E. Ten Eyck, Wichita, all of Kans., assignors to S/V Tool Company, Inc., Newton, Kans.
Filed Oct. 18, 1979, Ser. No. 86,087
Term of patent 14 years
Int. Cl. D8—*04*
U.S. Cl. D8—82

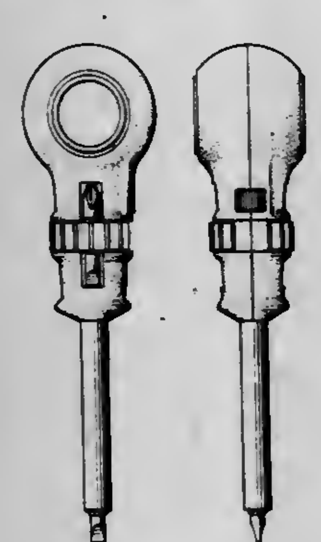

261,980
DRIVER FOR FASTENERS
Robert W. Fee; Richard E. Ten Eyck, both of Wichita, and Lloyd T. Smith, Newton, all of Kans., assignors to S/V Tool Company, Inc., Newton, Kans.
Filed Oct. 18, 1979, Ser. No. 86,089
Term of patent 14 years
Int. Cl. D8—*04*
U.S. Cl. D8—82

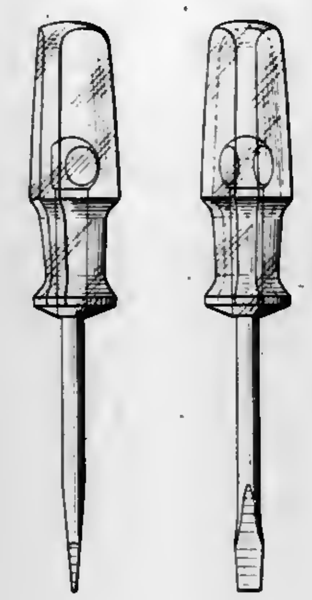

261,981
FASTENER ROTATING TOOL
Robert W. Fee; Richard E. Ten Eyck, both of Wichita, and Lloyd T. Smith, Newton, all of Kans., assignors to S/V Tool Company, Inc., Newton, Kans.
Filed Oct. 18, 1979, Ser. No. 86,090
Term of patent 14 years
Int. Cl. D8—*04*
U.S. Cl. D8—82

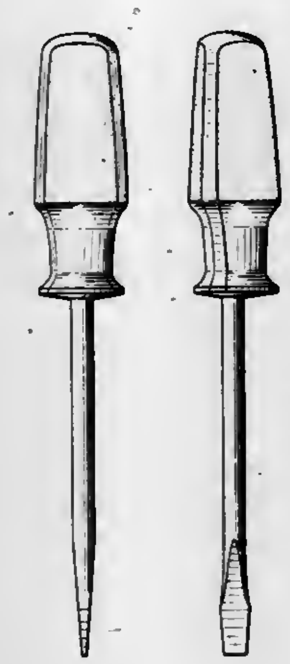

261,982
GLASS CUTTER
Toshimitsu Arai, Osaka, Japan, assignor to Toyo Sangyo Kabushiki Kaisha, Osaka, Japan
Filed Apr. 2, 1979, Ser. No. 26,230
Term of patent 14 years
Int. Cl. D8—*05*
U.S. Cl. D8—98

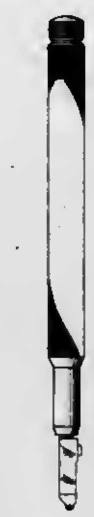

261,983
HANDLE
Joseph P. Tunzi, Galesburg, Ill., assignor to Magic Chef, Inc., Cleveland, Tenn.
Filed Aug. 7, 1978, Ser. No. 931,358
Term of patent 14 years
Int. Cl. D8—*06*
U.S. Cl. D8—314

261,984
PAINT CAN SUPPORT FOR A LADDER
Marcul L. Gunnells, Rt. 1, Box 137, Danville, Va. 24541
Filed Jun. 19, 1978, Ser. No. 916,714
Term of patent 14 years
Int. Cl. D8—*08*
U.S. Cl. D8—367

261,985
BOTTLE
Thomas A. Fowles, McHenry, Ill., and David A. Winchell, Twin Lakes, Wis., assignors to Baxter Travenol Laboratories, Inc., Deerfield, Ill.
Filed Sep. 10, 1979, Ser. No. 73,752
Term of patent 14 years
Int. Cl. D9—*01*
U.S. Cl. D9—390

261,986
BOTTLE
Ralph J. Abramo, Holliston, Mass., assignor to Sunbeam Plastics Corporation, Evansville, Ind.
Filed Sep. 19, 1979, Ser. No. 77,099
Term of patent 14 years
Int. Cl. D9—*01*
U.S. Cl. D9—403

261,987
BOTTLE
John Pardo, Yonkers, N.Y., assignor to The Procter & Gamble Company, Cincinnati, Ohio
Filed Oct. 12, 1979, Ser. No. 84,258
Term of patent 14 years
Int. Cl. D9—*01*
U.S. Cl. D9—413

261,988
PACKAGING CONTAINER
William R. Nichols; L. D. Robison, both of New London, and Samoel C. Swalby, Appleton, all of Wis., assignors to Curwood Inc., New London, Wis.
Filed Apr. 19, 1979, Ser. No. 31,449
Term of patent 14 years
Int. Cl. D9—*03*
U.S. Cl. D9—415

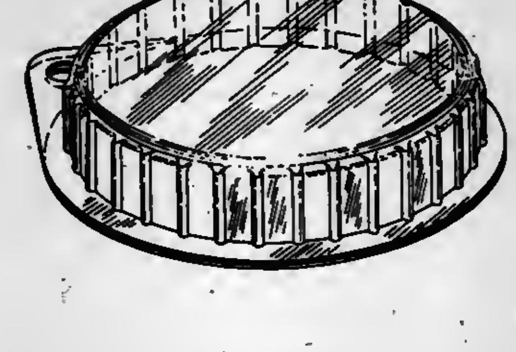

261,989
BLANK FOR A TWO COMPARTMENT BOX
Rudolph A. Faller, Edna, Minn., assignor to Champion International Corporation, Stamford, Conn.
Filed Jun. 4, 1979, Ser. No. 31,329
Term of patent 14 years
Int. Cl. D9—*03*
U.S. Cl. D9—433

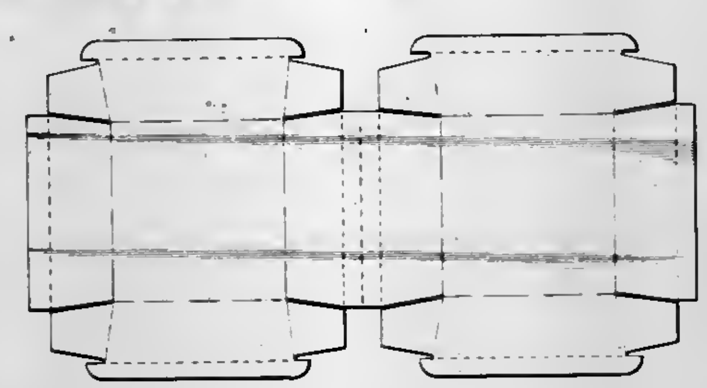

261,990
CARTON BLANK
Harry L. Roccaforte, Western Springs, Ill., assignor to Champion International Corporation, Stamford, Conn.
Filed Feb. 25, 1980, Ser. No. 124,299
Term of patent 14 years
Int. Cl. D9—*03*
U.S. Cl. D9—433

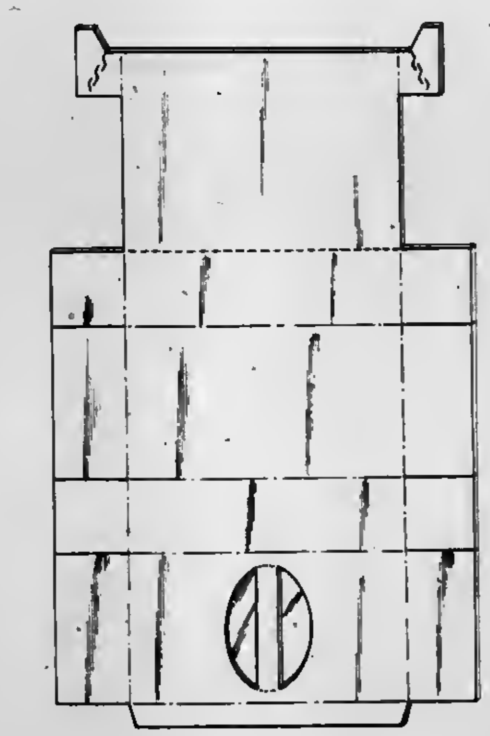

261,991
COMBINED CAP HOLDER AND CAP
William Schroeder, Van Nuys, Calif., assignor to Aelco Corporation, Van Nuys, Calif.
Filed Feb. 26, 1979, Ser. No. 15,739
Term of patent 14 years
Int. Cl. D09—*07*
U.S. Cl. D9—436

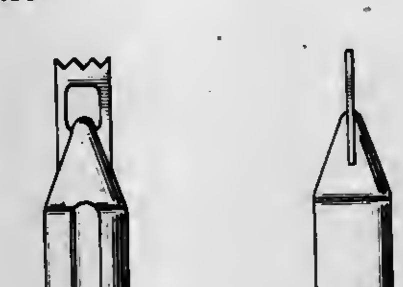

261,992
DISPENSING CLOSURE
Lyle B. Tuthill, and Dutro Blocksom, Jr., both of Cincinnati, Ohio, assignors to The Procter & Gamble Company, Cincinnati, Ohio
Filed Dec. 19, 1979, Ser. No. 105,183
Term of patent 14 years
Int. Cl. D09—*07*
U.S. Cl. D9—449

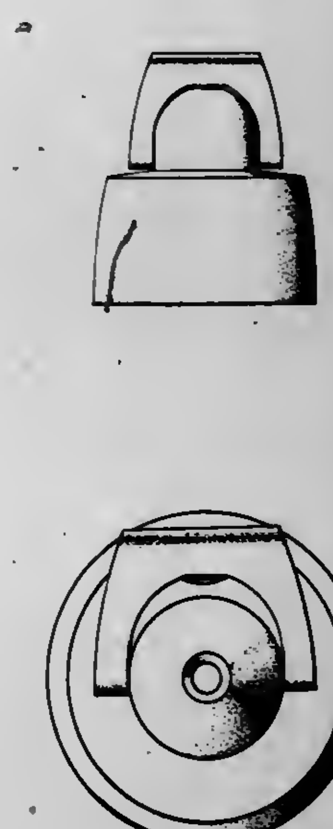

261,993
CLOCK
Dietrich Lubs, Bad Homburg, Fed. Rep. of Germany, assignor to Braun Aktiengesellschaft, Frankfurt am Main, Fed. Rep. of Germany
Filed Sep. 11, 1979, Ser. No. 74,592
Claims priority, application Fed. Rep. of Germany, Mar. 27, 1979, AZ 73 MR 8786
Term of patent 14 years
Int. Cl. D10—*01*
U.S. Cl. D10—23

261,994
DIGITAL WATCH
Masafumi Yamagami; Shigeaki Hayashi, and Harumi Tatsugami, all of Osaka, Japan, assignors to Sharp Corporation, Osaka, Japan
Filed Nov. 8, 1979, Ser. No. 92,629
Claims priority, application Japan, May 9, 1979, 54-18972
Term of patent 14 years
Int. Cl. D10—*02*
U.S. Cl. D10—30

261,995
DRAWING GUIDE
David J. Kolodge, 3446 Jarvis, Warren, Mich. 48091
Filed May 29, 1979, Ser. No. 42,878
Term of patent 14 years
Int. Cl. D10—*04*
U.S. Cl. D10—62

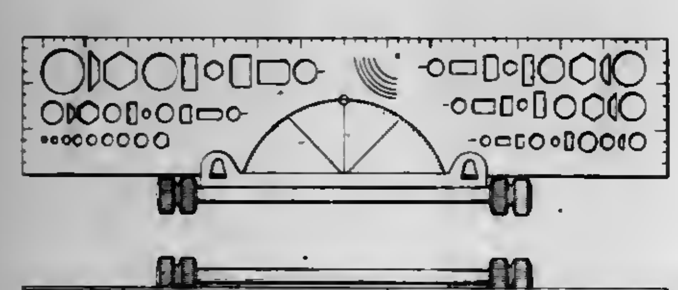

261,996
LEVELLING DEVICE
William F. Barton, Arlington Heights, Ill., assignor to Martronics Corp., Morton Grove, Ill.
Filed Aug. 13, 1979, Ser. No. 65,754
Term of patent 14 years
Int. Cl. D10—*04*
U.S. Cl. D10—69

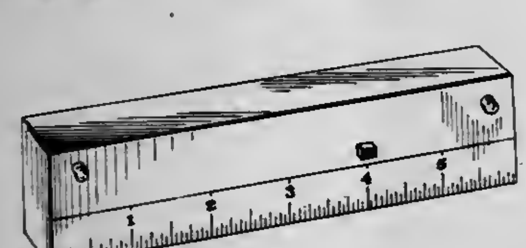

261,997
HOUSING FOR FIRE AND SMOKE DETECTOR
Donald J. Westphal, South Elgin, Ill., assignor to Pittway Corporation, Northbrook, Ill.
Filed Oct. 30, 1978, Ser. No. 956,226
Term of patent 7 years
Int. Cl. D10—*05*
U.S. Cl. D10—106

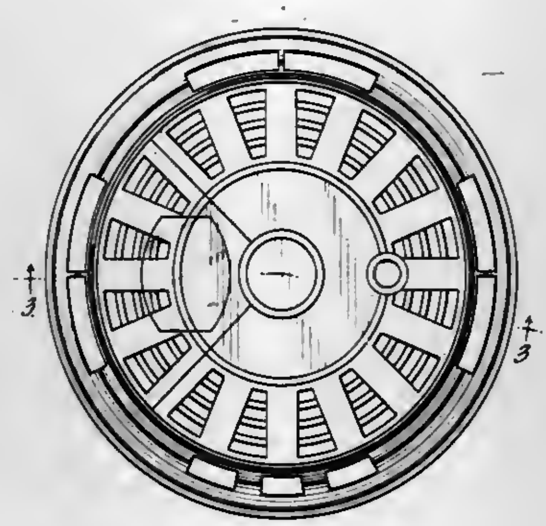

261,998
COMBINED WATER SENSOR AND ALARM APPARATUS
Robert E. Munz, Malverne, Pa., assignor to Sunbeam Corporation, Chicago, Ill.
Filed Jan. 16, 1980, Ser. No. 112,388
Term of patent 14 years
Int. Cl. D10—*05*
U.S. Cl. D10—106

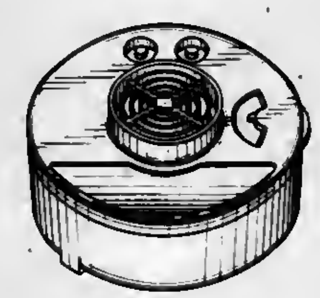

261,999
JEWELRY, CHARM OR SIMILAR ARTICLE
Juanita J. Snider, 19163 Old Vine Rd., Los Gatos, Calif. 95030
Filed Aug. 13, 1979, Ser. No. 66,075
Term of patent 14 years
Int. Cl. D11—*01*
U.S. Cl. D11—61

262,000
MOBILE
Henry M. Gall, 144-22 22nd Rd., Whitestone, N.Y. 11357
Filed Oct. 16, 1978, Ser. No. 951,850
Term of patent 14 years
Int. Cl. D11—*02*
U.S. Cl. D11—141

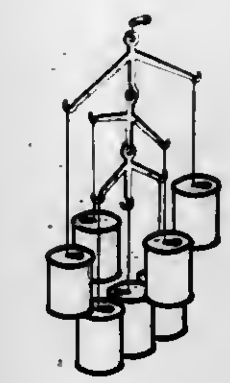

262,001
FIGURINE OF A COUGAR
Jesus A. Carbajales Santa-Eulalia, and Javier B. Carbajales Santa-Eulalia, both of Montevideo, Uruguay, assignors to John J. Madison Co. Inc., Laguna Hills, Calif.
Filed Oct. 4, 1979, Ser. No. 81,832
Term of patent 14 years
Int. Cl. D11—*02*
U.S. Cl. D11—158

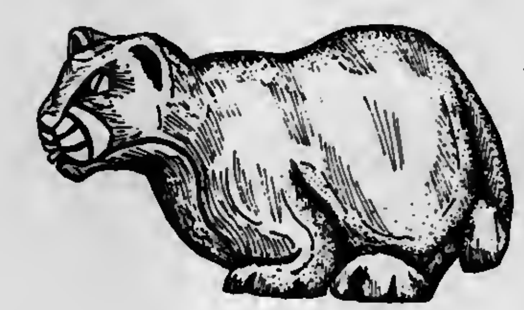

262,002
FIGURINE OF A GERMAN SHEPHERD
Jesus A. Carbajales Santa-Eulalia, and Javier B. Carbajales Santa-Eulalia, both of Montevideo, Uruguay, assignors to John J. Madison Co. Inc., Laguna Hills, Calif.
Filed Oct. 4, 1979, Ser. No. 81,907
Term of patent 14 years
Int. Cl. D11—*02*
U.S. Cl. D11—158

262,003
FIGURINE OF A SCOTTISH PUP
Jesus A. Carbajales Santa-Eulalia, and Javier B. Carbajales Santa-Eulalia, both of Montevideo, Uruguay, assignors to John J. Madison Co. Inc., Laguna Hills, Calif.
Filed Oct. 4, 1979, Ser. No. 81,910
Term of patent 14 years
Int. Cl. D11—*02*
U.S. Cl. D11—158

262,004
FIGURINE OF A DACHSHUND PUP
Jesus A. Carbajales Santa-Eulalia, and Javier B. Carbajales Santa-Eulalia, both of Montevideo, Uruguay, assignors to John J. Madison Co. Inc., Laguna Hills, Calif.
Filed Oct. 4, 1979, Ser. No. 81,911
Term of patent 14 years
Int. Cl. D11—*02*
U.S. Cl. D11—158

262,005
FIGURINE OF A COYOTE
Jesus A. Carbajales Santa-Eulalia, and Javier B. Carbajales Santa-Eulalia, both of Montevideo, Uruguay, assignors to John J. Madison Co. Inc., Laguna Hills, Calif.
Filed Oct. 4, 1979, Ser. No. 82,216
Term of patent 14 years
Int. Cl. D11—*02*
U.S. Cl. D11—158

262,006
FIGURINE OF A BOXER
Jesus A. Carbajales Santa-Eulalia, and Javier B. Carbajales Santa-Eulalia, both of Montevideo, Uruguay, assignors to John J. Madison Co. Inc., Laguna Hills, Calif.
Filed Dec. 17, 1979, Ser. No. 104,696
Term of patent 14 years
Int. Cl. D11—*02*
U.S. Cl. D11—158

262,007
FIGURINE OF A DUCK
Jesus A. Carbajales Santa-Eulalia, and Javier B. Carbajales Santa-Eulalia, both of Montevideo, Uruguay, assignors to John J. Madisoo Co. Inc., Laguna Hills, Calif.
Filed Oct. 4, 1979, Ser. No. 81,833
Term of patent 14 years
Int. Cl. D11—*02*
U.S. Cl. D11—162

262,008
WINCH ASSEMBLY
Richard E. Smith, 500 Fair St., Petaluma, Calif. 94952, and William L. Bryant, 273 Carina Dr., Santa Rosa, Calif. 95401
Filed Nov. 16, 1979, Ser. No. 94,939
Term of patent 14 years
Int. Cl. D12—*16*
U.S. Cl. D34—33

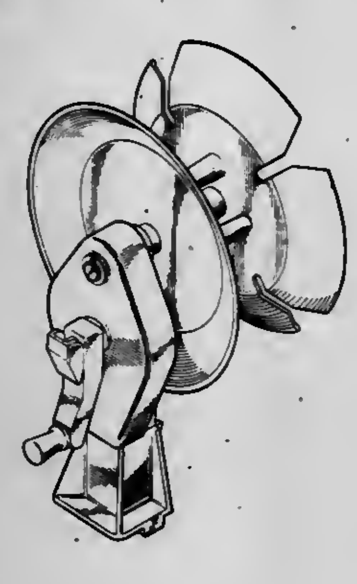

262,009
COMBINED UPPER HULL AND INTERIOR FOR A BOAT
Charles Bednar, Oak Park, Ill., assignor to Viking Boat Company, Inc., Middlebury, Ind.
Filed Dec. 5, 1978, Ser. No. 966,763
Term of patent 14 years
Int. Cl. D12—*06*
U.S. Cl. D12—300

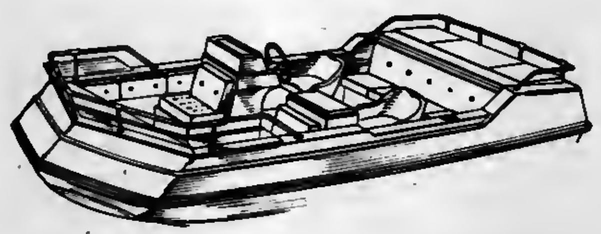

262,010
BELT WINCH AND ATTACHMENT DEVICE
Allan R. Thomas, P.O. Box 191, Maitland, Australia (5355)
Filed Feb. 12, 1979, Ser. No. 11,228
Claims priority, application Australia, Aug. 15, 1978, 75584
Term of patent 14 years
Int. Cl. D12—*05*
U.S. Cl. D34—33

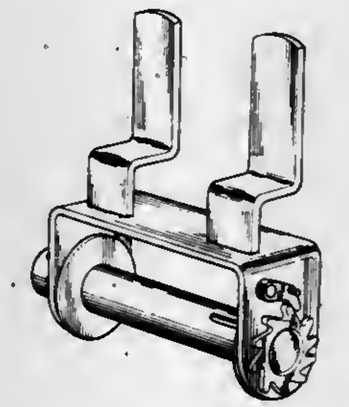

262,011
VEHICLE TIRE
Hiroshi Kojima, Hino; Takao Sakamoto, Kodaira, and Tatsuro Shimada, Fussa, all of Japan, assignors to Bridgestone Tire Co., Ltd., Tokyo, Japan
Filed Oct. 25, 1978, Ser. No. 954,719
Claims priority, application Japan, May 5, 1978, 53-18300
Term of patent 14 years
Int. Cl. D12—*15*
U.S. Cl. D12—146

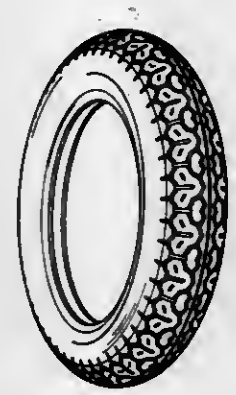

262,012
PNEUMATIC TIRE TREAD AND BUTTRESS
Gerassimos C. Candiliotis, Grosse Pointe Farms, Mich., assignor to Uniroyal, Inc., New York, N.Y.
Filed Dec. 12, 1978, Ser. No. 968,714
Term of patent 14 years
Int. Cl. D12—*15*
U.S. Cl. D12—147

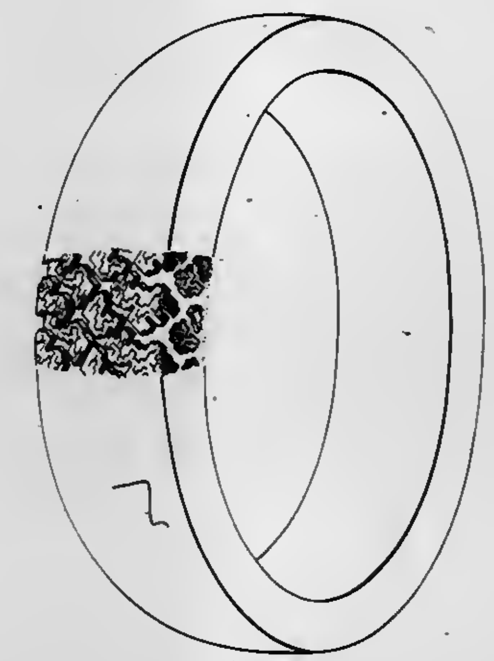

262,013
TIRE
Roy P. Davis, Uniontown, Ohio, assignor to The Goodyear Tire & Rubber Company, Akron, Ohio
Filed Feb. 26, 1979, Ser. No. 15,500
Term of patent 14 years
Int. Cl. D12—*15*
U.S. Cl. D12—147

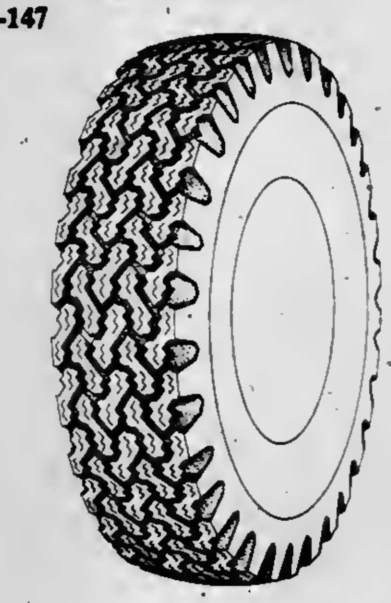

262,014
VEHICLE MOUNTED ACCOMMODATION MODULE
Gary W. Retallick, 20 Harrow St., Dover Gardens, Australia (5048)
Filed Jan. 24, 1979, Ser. No. 6,090
Claims priority, application Australia, Aug. 3, 1978, 75493
Term of patent 14 years
Int. Cl. D12—*16*
U.S. Cl. D12—156

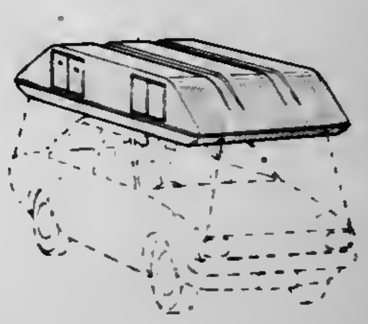

262,015
WHEEL COVERING
Alf Müller, Waiblingen-Bittenfeld; Dieter Renz, Rechberghausen; Bernd Loper, Korb; Andreas Langenbeck, Sindelfingen, and Stefan Heiliger, Offenbach am Main, all of Fed. Rep. of Germany, assignors to Daimler-Benz Aktiengesellschaft, Stuttgart, Fed. Rep. of Germany
Filed Jan. 29, 1979, Ser. No. 7,655
Claims priority, application Fed. Rep. of Germany, Jul. 27, 1978, 4873
Term of patent 14 years
Int. Cl. D12—*16*
U.S. Cl. D12—204

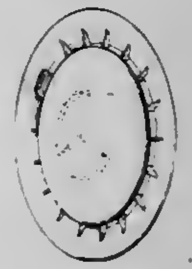

262,016
HANDLE FOR SAILBOAT HIKING STICK
Harrison W. Hine, 585 S. Burlingame Ave., Los Angeles, Calif. 90049
Filed Sep. 4, 1979, Ser. No. 71,858
Term of patent 14 years
Int. Cl. D12—*16*
U.S. Cl. D12—317

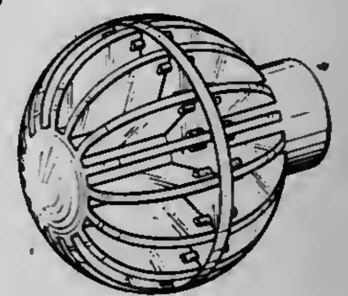

262,017
COMBINED CASSETTE PLAYER AND RECORDER AND RADIO OR SIMILAR ARTICLE
James H. Frakes, Jr., Manlius, N.Y., assignor to General Electric Company, New York, N.Y.
Filed May 12, 1980, Ser. No. 149,266
Term of patent 14 years
Int. Cl. D14—*01, 03*
U.S. Cl. D14—5

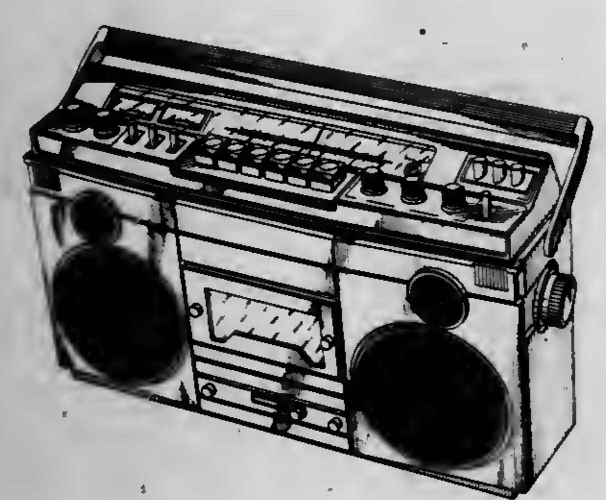

262,018
PHONOGRAPH
Melvin H. Boldt, Glenview, Ill., assignor to Rowe International, Inc., Grand Rapids, Mich.
Filed May 30, 1980, Ser. No. 154,819
Term of patent 14 years
Int. Cl. D14—*01*
U.S. Cl. D14—15

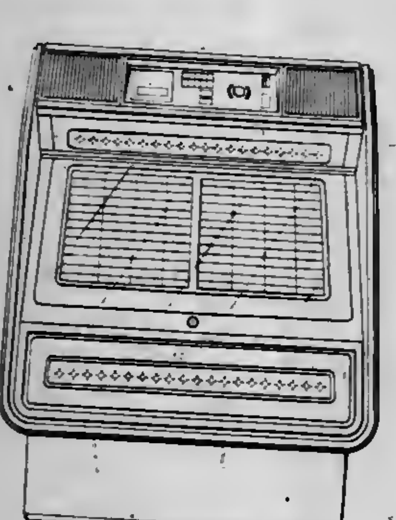

262,019
EARPHONE SET
Jim L. Upshaw, P.O. Box 9713, Austin, Tex. 78766
Filed Aug. 13, 1979, Ser. No. 66,039
Term of patent 14 years
Int. Cl. D14—*03*
U.S. Cl. D14—36

262,020
DESK TELEPHONE
Marilyn E. Brown, 444 Park Ave. South, New York, N.Y. 10016
Filed Sep. 5, 1978, Ser. No. 939,712
Claims priority, application Japan, Mar. 8, 1978, 53/19113
Term of patent 14 years
Int. Cl. D14—*03*
U.S. Cl. D14—53

262,021
VISUAL RECEIVER
Robert C. Sistek, 210 Grant St.; Richard J. Kuhn, 1754 Marion Dr., both of North Huntingdon, and Thomas I. Agnew, 1920 Highland Ave., Irwin, all of Pa. 15642
Filed Jul. 18, 1979, Ser. No. 58,514
Term of patent 14 years
Int. Cl. D14—*03*
U.S. Cl. D14—53

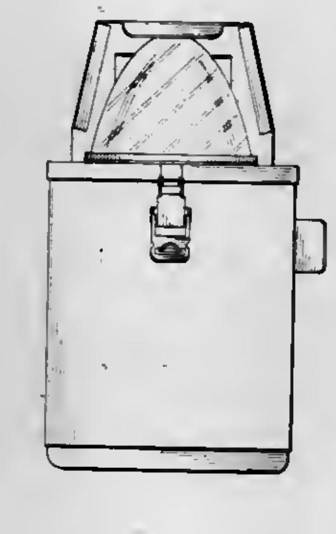

262,022
NOVELTY TELEPHONE
Wesley L. Thomas, 109 S. Catalina St., Los Angeles, Calif. 90004
Filed Aug. 6, 1979, Ser. No. 63,765
Term of patent 14 years
Int. Cl. D14—*53*
U.S. Cl. D14—53

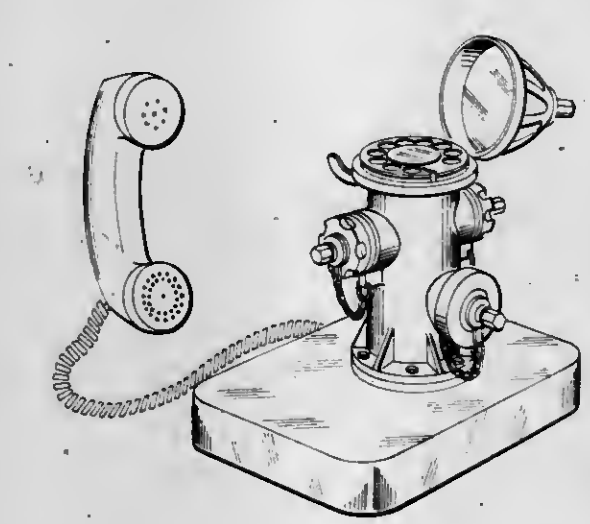

262,023
NOVELTY TELEPHONE
Wesley L. Thomas, 109 S. Catalina St., Los Angeles, Calif. 90004
Filed Aug. 6, 1979, Ser. No. 63,766
Term of patent 14 years
Int. Cl. D14—*03*
U.S. Cl. D14—53

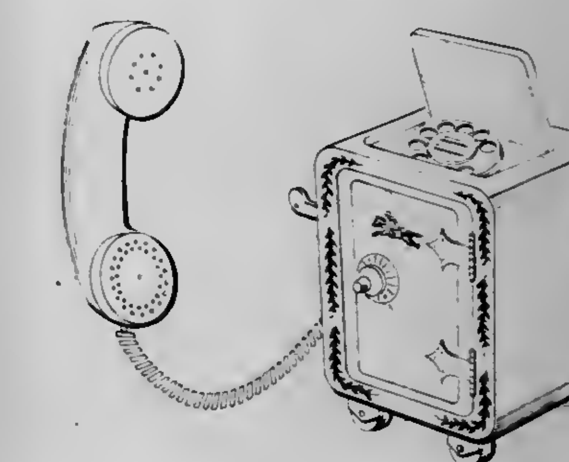

262,024
NOVELTY TELEPHONE
Wesley L. Thomas, 109 S. Catalina St., Los Angeles, Calif. 90004
Filed Aug. 6, 1979, Ser. No. 63,767
Term of patent 14 years
Int. Cl. D14—*03*
U.S. Cl. D14—53

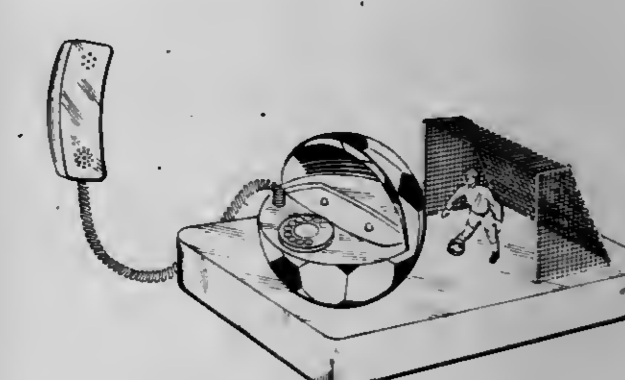

262,025
NOVELTY TELEPHONE
Wesley L. Thomas, 109 S. Catalina St., Los Angeles, Calif. 90004
Filed Aug. 6, 1979, Ser. No. 63,768
Term of patent 14 years
Int. Cl. D14—*03*
U.S. Cl. D14—53

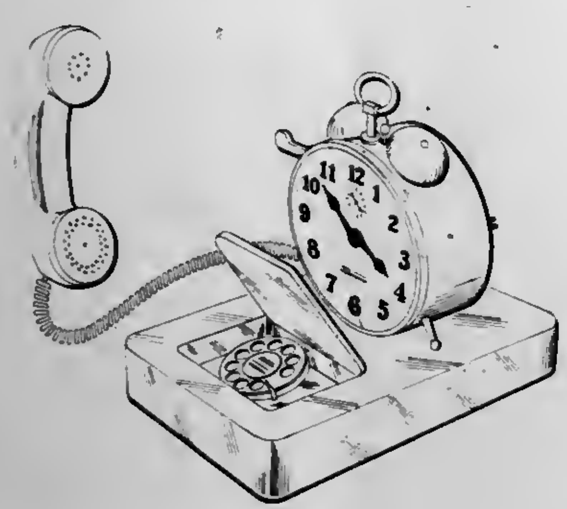

262,026
MIRROR ATTACHMENT FOR TELEPHONE
Michael J. Garan, 5761 Parkhurst Pl., Yorba Linda, Calif. 92686
Filed Aug. 2, 1979, Ser. No. 63,068
Term of patent 14 years
Int. Cl. D14—*99*
U.S. Cl. D14—59

262,027
TELEPHONE-MOUNTABLE HOLDER WITH CLIP TO RETAIN WRITING INSTRUMENT
Frederick Francis, 13800 Terrace Rd. #819, East Cleveland, Ohio 44112
Filed Aug. 23, 1979, Ser. No. 69,225
Term of patent 14 years
Int. Cl. D14—*03*
U.S. Cl. D14—66

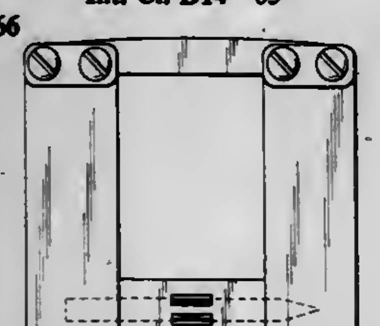

262,028
AGRICULTURAL TINE
William M. Johnson, Melton South, Australia, assignor to Ralph McKay Limited, Victoria, Australia
Filed Mar. 9, 1979, Ser. No. 19,254
Claims priority, application Australia, Sep. 11, 1978, 75882
Term of patent 14 years
Int. Cl. D15—*03*
U.S. Cl. D15—29

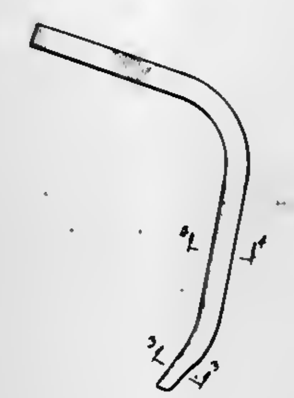

262,029
AUTOMOBILE VACUUM CLEANER
Harold Osrow; Jacques L. Le Baigue, and Armando A. Araujo, Jr., all of Old Bethpage, N.Y., assignors to Osrow Products Corp., Old Bethpage, N.Y.
Filed May 31, 1979, Ser. No. 44,009
Term of patent 14 years
Int. Cl. D15—*05*
U.S. Cl. D32—23

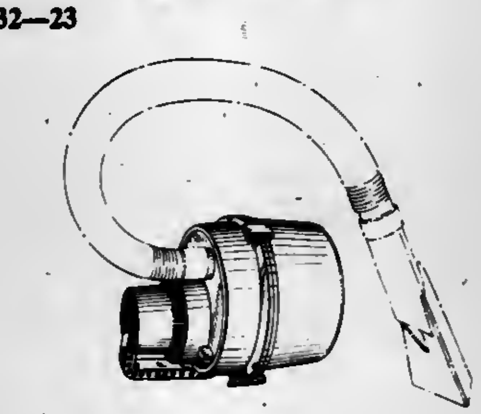

262,030
DISPENSING CABINET
Alton D. Reece, 2115 Scott Rd., Brown Summit, N.C. 27214
Filed Feb. 26, 1980, Ser. No. 124,729
Term of patent 14 years
Int. Cl. D15—*99*
U.S. Cl. D15—111

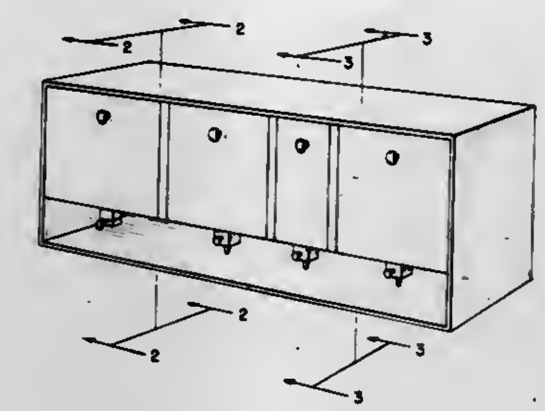

262,031
MULTI-PURPOSE POWER TOOL
Anthony Fox, 8306 Queen Ave. South, Minneapolis, Minn. 55431
Filed Jul. 23, 1979, Ser. No. 59,882
Term of patent 14 years
Int. Cl. D15—*09*
U.S. Cl. D15—122

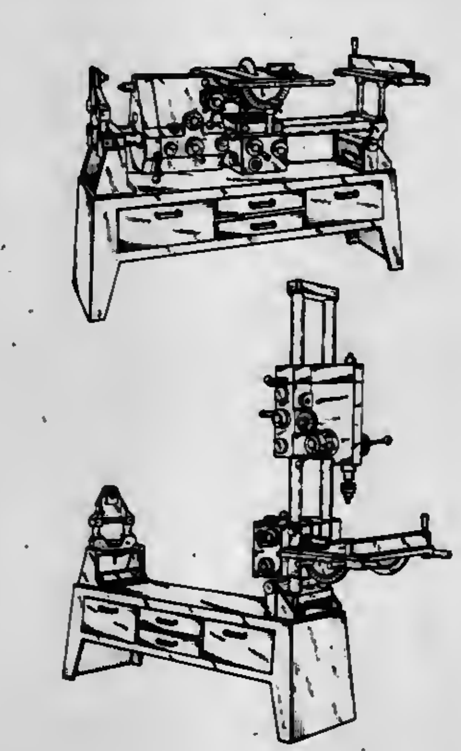

262,032
OUTER CASING FOR PLANETARY GEAR ASSEMBLY
Katsuyuki Totsu, No. 1-17-8, Higashi Mukojima, Sumida-ku, Tokyo, Japan
Filed Aug. 4, 1978, Ser. No. 931,116
Term of patent 14 years
Int. Cl. D15—*99*; D8—*99*
U.S. Cl. D15—138

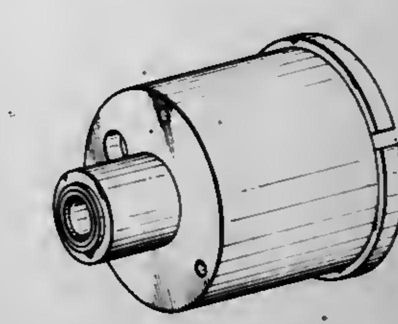

262,033
RING GEAR FOR PLANETARY GEAR ASSEMBLY
Katsuyuki Totsu, No. 1-17-8, Higashi Mukojima, Sumida-ku, Tokyo, Japan
Filed Aug. 4, 1978, Ser. No. 931,117
Term of patent 14 years
Int. Cl. D15—*09,99*
U.S. Cl. D15—138

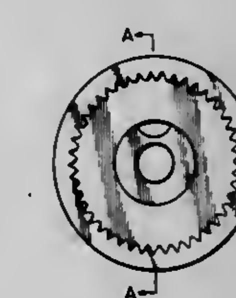

262,034
SPINDLECASE ATTACHMENT FOR TAPPING MACHINES TO CHANGE THE ROTATION OF THE TOOL
Eiji Miyakawa, Tokyo, Japan, assignor to Miyakawa Industry Company, Limited, Seki, Japan
Continuation-in-part of Ser. No. 917,827, Jun. 22, 1978, abandoned. This application Oct. 29, 1979, Ser. No. 89,055
Claims priority, application Japan, Dec. 27, 1977, 52-52203
Term of patent 14 years
Int. Cl. D15—*09*
U.S. Cl. D15—140

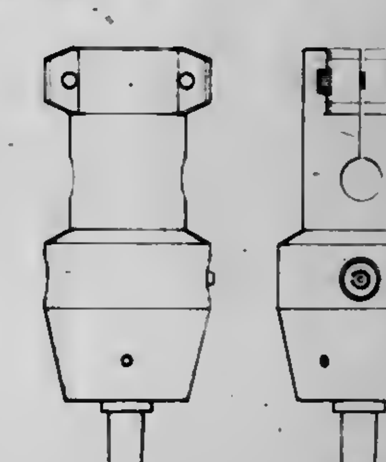

262,035
WIND INSTRUMENT
Brian L. Wittman, Haelo near Paia, Hi.
Filed Jan. 10, 1980, Ser. No. 110,884
Term of patent 14 years
Int. Cl. D17—*02*
U.S. Cl. D17—10

262,036
TYPEWRITER
Angelo M. LaBarbera, Liverpool, N.Y., assignor to SCM Corporation, New York, N.Y.
Filed Dec. 14, 1979, Ser. No. 103,823
Term of patent 14 years
Int. Cl. D18—*01*
U.S. Cl. D18—1

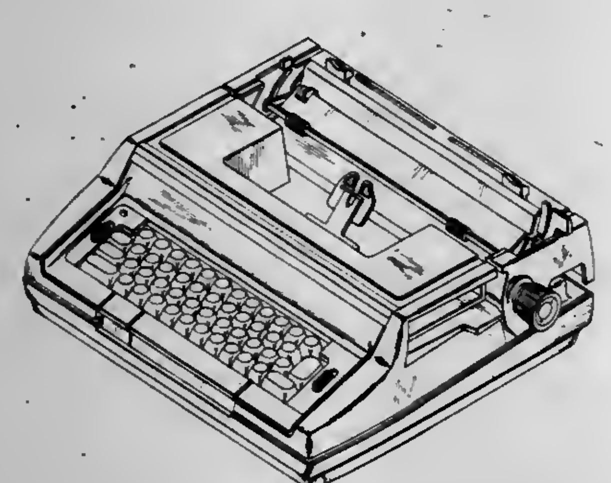

262,037
CALLIGRAPHIC FONT
Richard A. Foy, Boulder, Colo., assignor to Paramount Pictures Corporation, New York, N.Y.
Filed Mar. 3, 1980, Ser. No. 126,487
Term of patent 14 years
Int. Cl. D18—*03*
U.S. Cl. D18—24

ABCDEFGHIJ
KLMNOPQR
STUVWXYZ
1234567890

abcdefghijklmn
opqrstuvwxyz
(&.,:;!?"-"*$¢%())

262,038
TYPEFACE FOR PHOTOCOMPOSITION
Iraida N. Chepil, ulitsa Baikalskaya, 44, korpus 1, kv. 138; Lev B. Levin, ulitsa Gorkogo, 12, kv. 286; Grigory K. Bezprozvanny, ulitsa Profsojuznaya, 109, kv. 150, and Yakov P. Shturman, ulitsa Bochkova, 8, kv. 164, all of Moscow, U.S.S.R.
Filed May 1, 1978, Ser. No. 901,753
Term of patent 14 years
Int. Cl. D18—*03*
U.S. Cl. D18—25

aăæbcçdđefghiıjklłmnoőøœpq rsßtuűvwxyz
AĂÆBCÇDĐEFGHIJKLŁMN OŐØŒPQRSTUŰVWXYZ
..:;-!?„"«»()*[]'§№{}—%_‰&°/#
0123456789 IVXLMCD

262,039
TYPEFACE FOR PHOTOCOMPOSITION
Iraida N. Chepil, ulitsa Baikalskaya, 44, korpus 1, kv. 138; Lev B. Levin, ulitsa Gorkogo, 12, kv. 286; Grigory K. Bezprozvanny, ulitsa Profsojuznaya, 109, kv. 150, and Yakov P. Shturman, ulitsa Bochkova, 8, kv. 164, all of Moscow, U.S.S.R.
Filed May 1, 1978, Ser. No. 901,754
Term of patent 14 years
Int. Cl. D18—*03*
U.S. Cl. D18—25

ΑΒΓΔΕΖΗΘΙΚΛΜΝΞΟΠΡΣΤΥ ΦΧΨΩ
αβγδεζηθθικλμνξοπρσςτυφχψω
.,:;-!?„"«»()*[]'§№
0123456789 IVXLMCD

262,040
LEAF FOR A PHOTOGRAPH ALBUM
Hans L. Wihlke, Stromkarlsvagen 57, S-161 38 Bromma, Sweden
Filed Dec. 29, 1978, Ser. No. 974,618
Claims priority, application Sweden, Jun. 30, 1978, 781648
Term of patent 14 years
Int. Cl. D19—*04*
U.S. Cl. D19—33

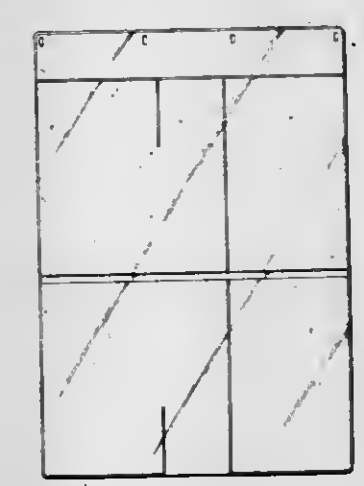

262,041
DESK SET
Günther Schmidt, Eberbachstrasse 68, 7570 Baden-Baden 19, Fed. Rep. of Germany
Continuation-in-part of Ser. No. 900,289, Apr. 26, 1978, abandoned. This application Sep. 18, 1978, Ser. No. 943,465
Claims priority, application Fed. Rep. of Germany, Oct. 26, 1977, 13408
Term of patent 14 years
Int. Cl. D19—*06*
U.S. Cl. D19—75

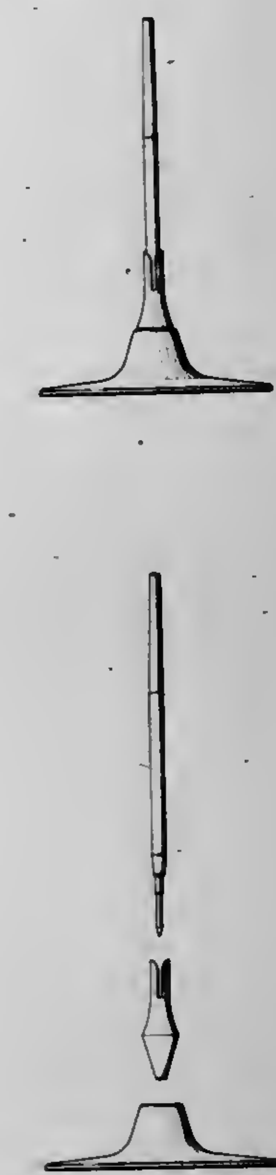

262,042
SLOT MACHINE
Paavo Lahtinen, Kaskenpolttajantie 11, 02340 Espoo 34, Finland
Filed Oct. 19, 1978, Ser. No. 952,860
Term of patent 14 years
Int. Cl. D21—*01*
U.S. Cl. D21—12

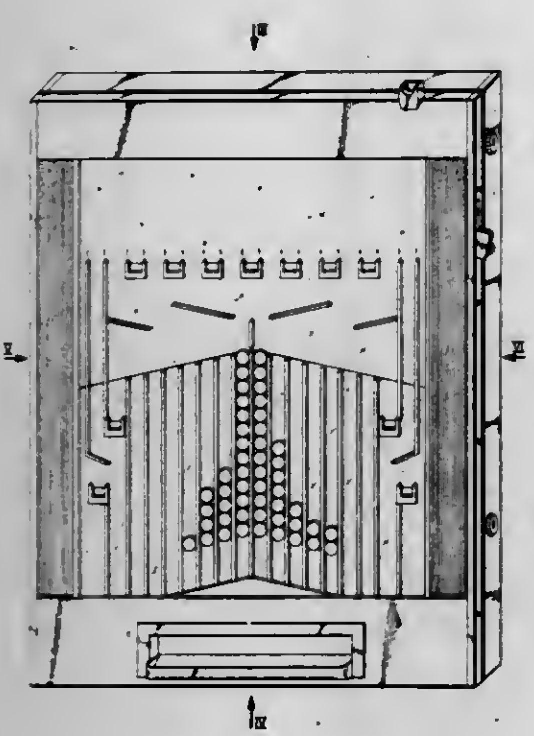

262,043
TARGET GAME WITH SCOREBOARD HOUSING
Akio Fukushima, Tokyo, Japan, assignor to Ohjuma Seisakusho Co., Ltd., Japan
Filed Aug. 8, 1979, Ser. No. 64,792
Claims priority, application Japan, Mar. 7, 1979, 54-8548
Term of patent 14 years
Int. Cl. D21—*01*
U.S. Cl. D21—13

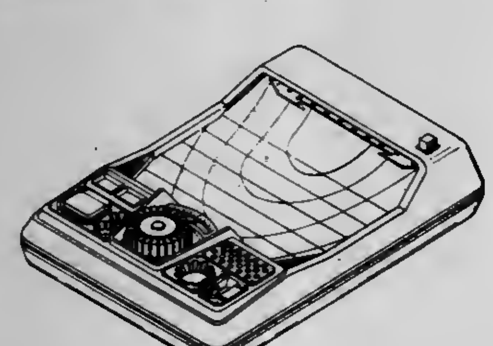

262,044
ELECTRONIC GAME HOUSING
Douglas P. Montague, Chicago, Ill., assignor to Marvin Glass & Associates, Chicago, Ill.
Filed Feb. 8, 1980, Ser. No. 119,982
Term of patent 14 years
Int. Cl. D21—*01*
U.S. Cl. D21—13

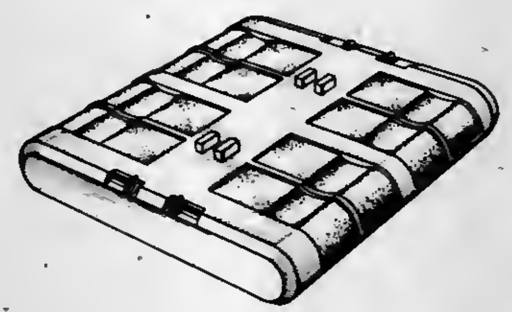

262,045
BLOCK TOY
Shinroku Nakao, Yokohama; Yoshiyasu Ishii, and Kenshun Ishii, both of Tokyo, all of Japan, assignors to Combi Co., Ltd., Tokyo, Japan
Filed Jul. 25, 1979, Ser. No. 60,302
Term of patent 14 years
Int. Cl. D21—*01*
U.S. Cl. D21—108

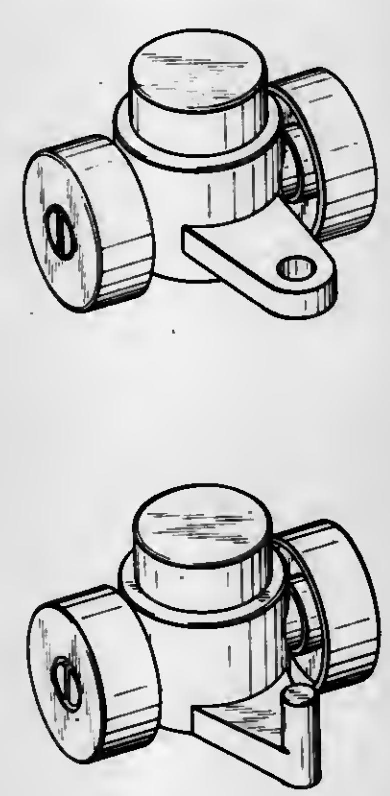

262,046
TOY CAMERA
Masami Shiraishi, Tokyo, Japan, assignor to Tomy Kogyo Co., Inc., Tokyo, Japan
Filed Aug. 17, 1979, Ser. No. 67,701
Claims priority, application Japan, Mar. 7, 1979, 54-8834
Term of patent 14 years
Int. Cl. D21—*01*
U.S. Cl. D21—110

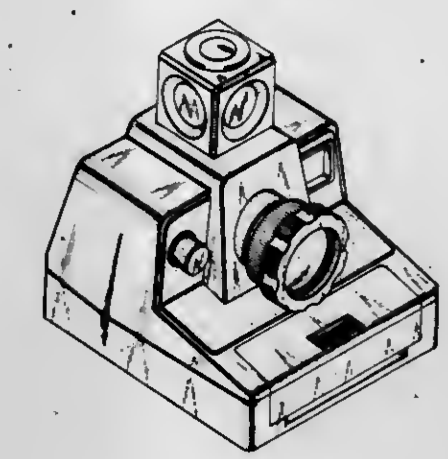

262,047
SIMULATIVE TOY HOUSE
J. Stephen Lewis, Pacific Palisades; Janice E. Rosenthal, Manhattan Beach; Virginia R. Sargent, Hermosa Beach, and Juanito O. Villanueva, Lawndale, all of Calif., assignors to Mattel, Inc., Hawthorne, Calif.
Filed Mar. 5, 1979, Ser. No. 17,224
Term of patent 14 years
Int. Cl. D21—*01*
U.S. Cl. D21—115

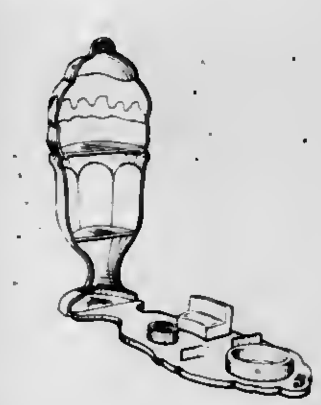

262,048
TOY TRACKWAY HAVING MOVING ANIMATED COMPONENTS
Yuji Kato, Tokyo, Japan, assignor to Tomy Kogyo Co., Inc., Tokyo, Japan
Filed Aug. 20, 1979, Ser. No. 67,824
Term of patent 14 years
Int. Cl. D21—*01*
U.S. Cl. D21—143

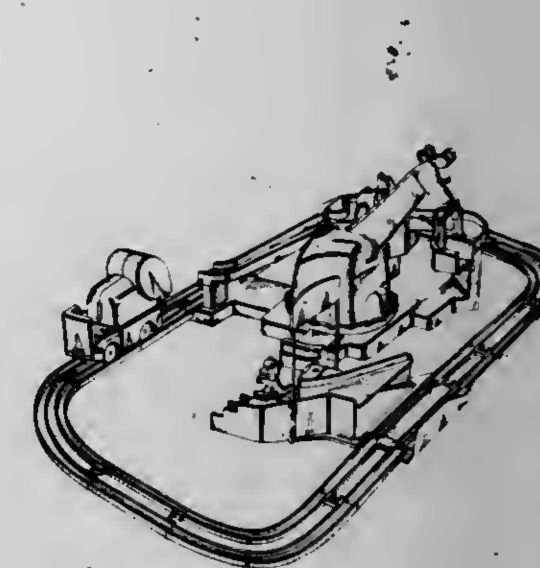

262,049
GOLF CLUB HEAD
Samuel P. Simmons, 1746 Abalone Ave., Torrance, Calif. 90501
Filed Aug. 6, 1979, Ser. No. 63,912
Term of patent 14 years
Int. Cl. D21—*02*
U.S. Cl. D21—214

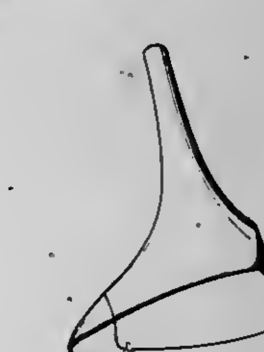

262,050
PORTABLE TOILET
John M. Antos; Arthur W. Henke, and Erin J. Lindsay, all of Ann Arbor, Mich., assignors to Thetford Corporation, Ann Arbor, Mich.
Filed Sep. 10, 1979, Ser. No. 74,391
Term of patent 14 years
Int. Cl. D23—*02*
U.S. Cl. D23—48

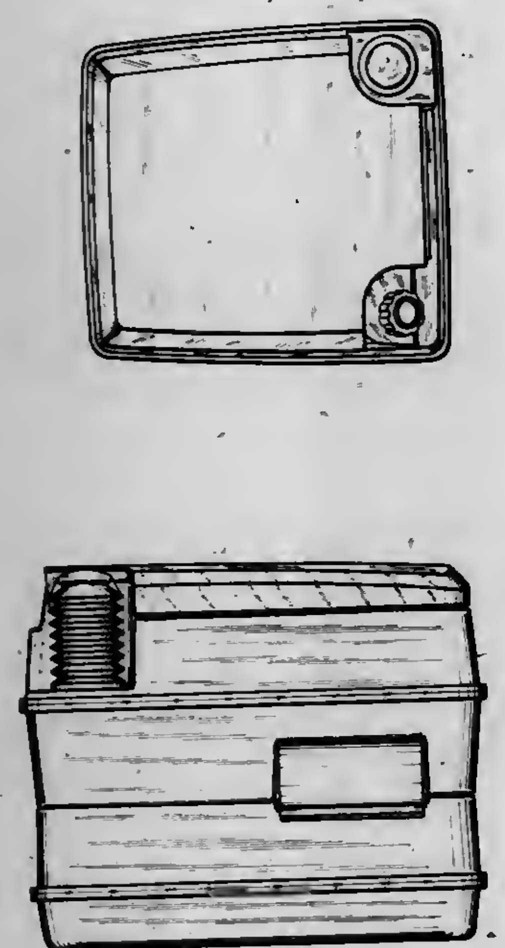

262,051
PORTABLE TOILET
Charles L. Sargent, Ann Arbor; John A. Hoffman, Brighten, and John M. Antos, Ann Arbor, all of Mich., assignors to Thetford Corporation, Ann Arbor, Mich.
Filed Sep. 18, 1979, Ser. No. 76,590
Term of patent 14 years
Int. Cl. D23—*02*
U.S. Cl. D23—48

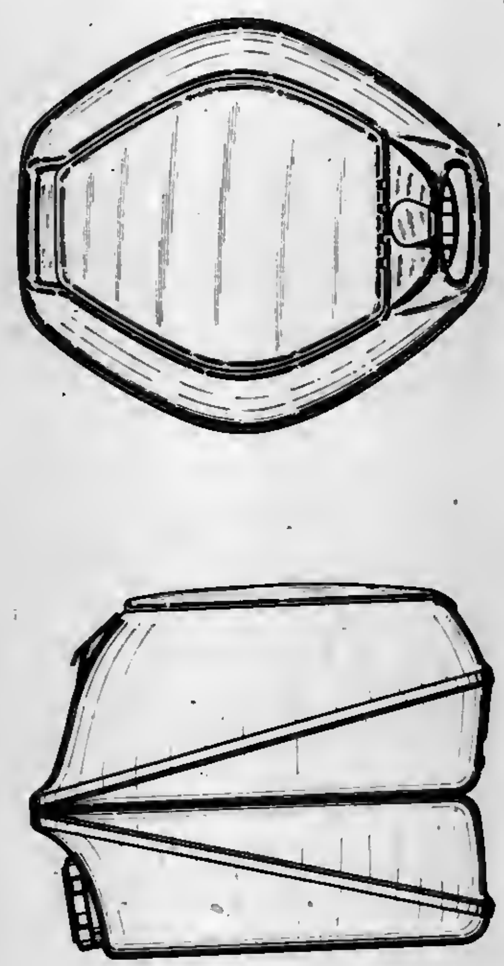

262,052
FACIAL BUBBLE BATH
Tsugio Akita, Osaka, Japan, assignor to Matsushita Electric Industrial Co., Ltd., Kadoma, Japan
Filed Oct. 29, 1979, Ser. No. 88,914
Claims priority, application Japan, May 16, 1979, 54-19805
Term of patent 14 years
Int. Cl. D23—*02*
U.S. Cl. D23—48

262,053
CHARCOAL STARTER
Elmer L. Gavino, 31221 Lily St., Union City, Calif. 94587
Filed Nov. 2, 1978, Ser. No. 957,248
Term of patent 14 years
Int. Cl. D23—*99*
U.S. Cl. D23—90.1

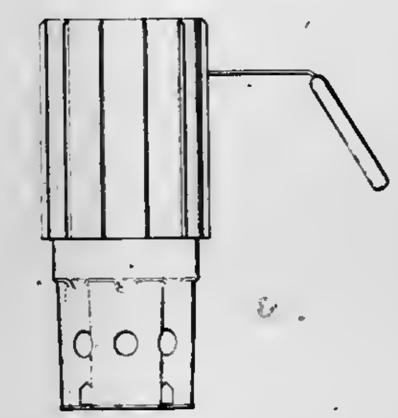

262,055
SURGICAL INSTRUMENT
Ralph Luikart, II, 1532 Anacapa St., Santa Barbara, Calif. 93101
Filed Aug. 7, 1979, Ser. No. 64,635
Term of patent 14 years
Int. Cl. D24—*02*
U.S. Cl. D24—27

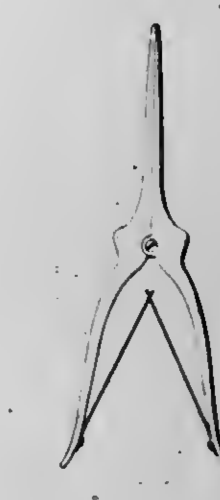

262,054
DISPENSER FOR ROOM DEODORANT
Richard C. J. Palson, Medfield, and John C. Armstrong, Milton, both of Mass., assignors to The Pharmasol Corporation, Randolph, Mass.
Filed Nov. 5, 1979, Ser. No. 91,269
Term of patent 14 years
Int. Cl. D23—*4*
U.S. Cl. D23—150

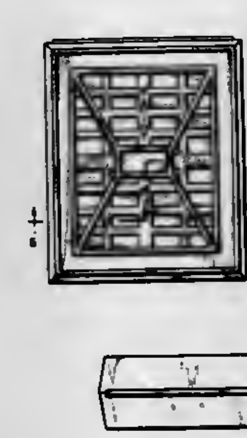

262,056
LIQUID STORAGE DEVICE
Friedrich Rosemeier, Hechingen, and Horst Killmaier, Hechingen-Boll, both of Fed. Rep. of Germany, assignors to Gambro Dialysatoren GmbH & Co. KG, Fed. Rep. of Germany
Filed Mar. 2, 1979, Ser. No. 17,153
Claims priority, application Sweden, Sep. 13, 1978, 782098
Term of patent 14 years
Int. Cl. D24—*04*
U.S. Cl. D24—58

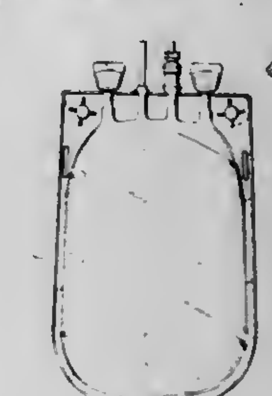

262,057
TRANSPARENT LABORATORY SLIDE
James E. Parker, Long Beach, Calif., assignor to ICL/Scientific, Fountain Valley, Calif.
Filed May 23, 1979, Ser. No. 41,748
Term of patent 14 years
Int. Cl. D24—*02*
U.S. Cl. D24—99

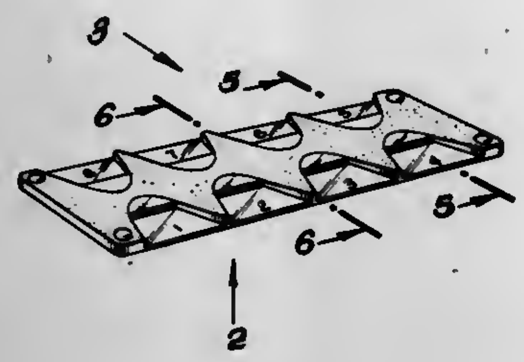

262,058
BUILDING WITH REARWARD FACING SOLAR PANEL
Andrew W. Graybeal, Mountain View; Steve S. Hiller, Menlo Park, and Thomas T. Hisata, Palo Alto, all of Calif., assignors to Hiller Enterprises, Redwood City, Calif.
Filed Jan. 8, 1979, Ser. No. 1,466
Term of patent 14 years
Int. Cl. D25—*03*
U.S. Cl. D25—30

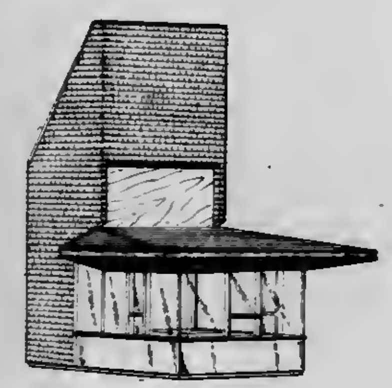

262,059
METAL MOLDING FOR DOOR JAMB OR SIMILAR ARTICLE
Donald L. Bittner, New Castle, Ind., assignor to American Standard Inc., New York, N.Y.
Filed Oct. 2, 1979, Ser. No. 68,292
Term of patent 14 years
Int. Cl. D25—*01*
U.S. Cl. D25—74

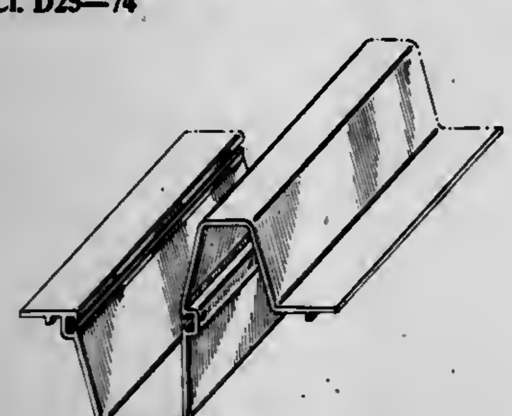

262,060
HAIR DRYER
Petrus J. J. Nagelkerke, Drachten, Netherlands, assignor to U.S. Philips Corporation, New York, N.Y.
Filed Jun. 7, 1979, Ser. No. 46,418
Claims priority, application United Kingdom, Dec. 13, 1978, 987651/78
Term of patent 14 years
Int. Cl. D28—*03*
U.S. Cl. D28—13

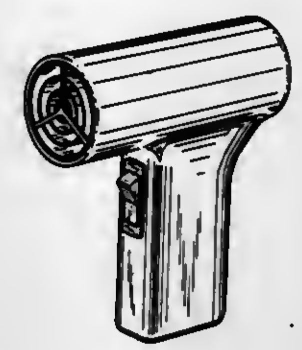

262,061
HAIR DRYER
Wilhelmus G. E. Janssens, Drachten, Netherlands, assignor to U.S. Philips Corporation, New York, N.Y.
Filed Jun. 7, 1979, Ser. No. 46,573
Claims priority, application United Kingdom, Dec. 13, 1978, 987652/78
Term of patent 14 years
Int. Cl. D28—*03*
U.S. Cl. D28—13

262,062
HAIR DRYER
Petrus J. J. Nagelkerke, Drachten, Netherlands, assignor to U.S. Philips Corporation, New York, N.Y.
Filed Jun. 7, 1979, Ser. No. 46,574
Claims priority, application United Kingdom, Dec. 13, 1978, 987650/78
Term of patent 14 years
Int. Cl. D28—*03*
U.S. Cl. D28—13

262,063
HAIR ROLLER CLIP
William E. Springer, Bridgeport, Conn., assignor to Clairol Incorporated, New York, N.Y.
Filed Jan. 28, 1980, Ser. No. 115,652
Term of patent 14 years
Int. Cl. D28—*03*
U.S. Cl. D28—40

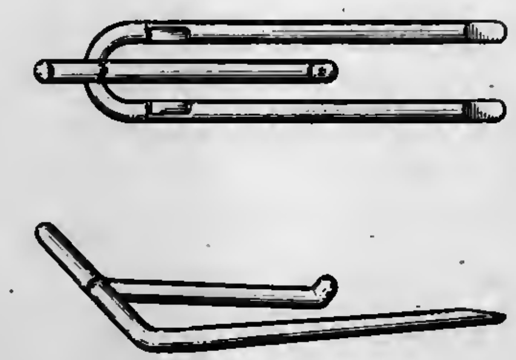

262,064
TWEEZER OR SIMILAR ARTICLE
Edgar A. Rainin, 20 Shawn Ct., Danville, Calif. 94526
Filed Sep. 17, 1979, Ser. No. 77,163
Term of patent 14 years
Int. Cl. D28—*03*
U.S. Cl. D28—55

262,065
HAND PAN
Daniel G. Holman, 12743 Radisson Rd., N.E., Blaine, Minn. 55434; Robert A. Ersek, 2300 Cypress Point West, Austin, Tex. 78746, and Arthur A. Beisang, 2263 Dellwood, Roseville, Minn. 55113
Filed Oct. 9, 1979, Ser. No. 82,429
Term of patent 14 years
Int. Cl. D28—*03*
U.S. Cl. D28—61

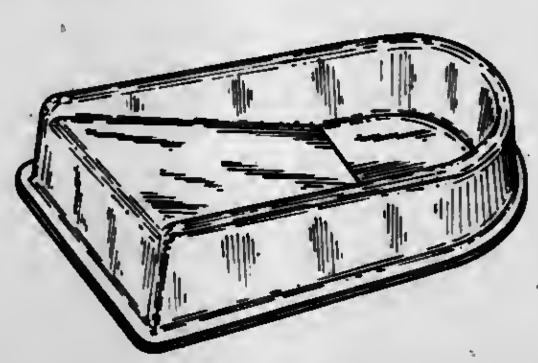

262,066
COMBINED DENTAL PICK, DENTAL FLOSS HOLDER AND DENTAL AID CONTAINER
Orlando A. Battista, 5280 Trail Lake Dr., Fort Worth, Tex. 76133
Filed Dec. 4, 1978, Ser. No. 965,753
Term of patent 14 years
Int. Cl. D28—*01*; D9—*01*
U.S. Cl. D28—64

262,067
BRUSH ORGANIZER WITH BRUSHES AND DETACHABLE HANDLE
Salvator J. Megna, 3721 Fair Oaks Blvd., Sacramento, Calif. 95825
Filed Apr. 25, 1979, Ser. No. 33,039
Term of patent 14 years
Int. Cl. D28—*03*
U.S. Cl. D28—74

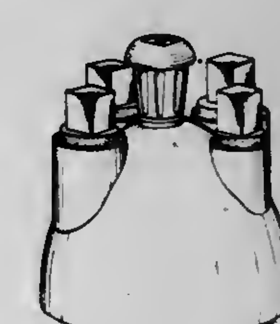

262,068
FIRE STOP
Richard S. Wilson, Oceanside, Calif., assignor to Brand Insulations, Inc., Park Ridge, Ill.
Filed Apr. 18, 1979, Ser. No. 31,061
Term of patent 14 years
Int. Cl. D29—*01*
U.S. Cl. D29—1

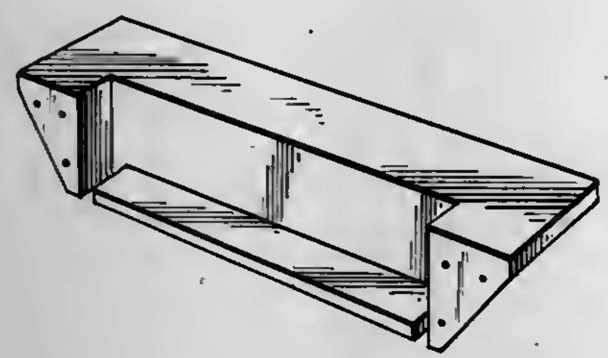

262,069
ANIMAL DISH
George Khider, 129 Porterfield Pl., Freeport, N.Y. 11520
Filed Jan. 25, 1980, Ser. No. 115,265
Term of patent 14 years
Int. Cl. D30—*03*
U.S. Cl. D30—16

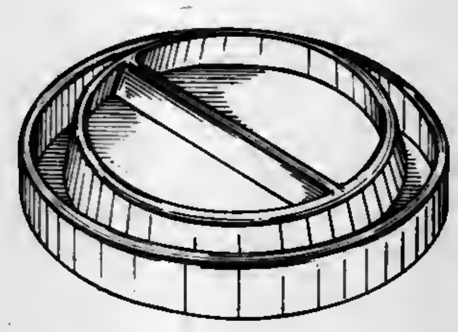

LIST OF PATENTEES

TO WHOM

PATENTS WERE ISSUED ON THE 24TH DAY OF NOVEMBER, 1981

NOTE.—Arranged in accordance with the first significant character or word of the name (in accordance with city and telephone directory practice).

Altorfer, Kenneth J.; and Marantz, Daniel R., to Texasgulf Inc. Metallizing of a corrodible metal with a protective metal. 4,302,483, Cl. 427-37.000.

Aluminum Company of America: *See*—
Deveney, Charles H., Jr., 4,301,563, Cl. 10-10.00R.

Alvarez Berenguer, Antonio; Sanchez Montero, Fernando R.; and Aragon Martinez, Juan J., to Tolsa, S. A. Process for obtaining silane derivatives of sepiolite by reaction with alkoxy-silanes to improve their reinforcing capacity in polymers. 4,302,594, Cl. 556-425.000.

Alving, Carl R.: *See*—
Steck, Edgar A.; and Alving, Carl R., 4,302,459, Cl. 424-258.000.

Alzhanov, Tleubai M.: *See*—
Chernogorenko, Vasily B.; Alzhanov, Tleubai M.; Lynchak, Kima A.; Muchnik, Simon V.; Ishkhanov, Evgeny S.; Sergienko, Vladimir Y.; Sapian, Vladimir G.; Koverya, Vladimir M.; Pobortsev, Mendel E.; Markovsky, Evgeny A.; Dmitrenko, Valentina V.; Bykov, Vladimir I.; Kipchakbaev, Alexandr D.; and Vopilov, Alexandr N., 4,302,249, Cl. 75-143.000.

Ambico Inc.: *See*—
Stravitz, David M., 4,302,078, Cl. 350-318.000.

American Can Company: *See*—
Winters, Frederic T., 4,302,245, Cl. 75-86.000.

American Cyanamid Company: *See*—
Fanshawe, William J.; McKenzie, Thomas C.; and Crawley, Lantz S., 4,302,589, Cl. 546-201.000.

American Grease Stick Company: *See*—
Holmgren, William C.; and Hiddema, Charles E., 4,302,365, Cl. 252-548.000.

American Hoechst Corp.: *See*—
Heberger, John M., 4,302,505, Cl. 428-341.000.
Heberger, John M., 4,302,506, Cl. 428-341.000.

American Home Products Corporation: *See*—
Helfer, Joel N., 4,301,806, Cl. 128-642.000.
Wei, Peter H. L.; and Bell, Stanley C., 4,302,585, Cl. 544-247.000.

American Newspaper Publishers Association: *See*—
Jaffe, Erwin; Matalia, Harshad; Rinehart, William D.; Warner, Frederick L.; Navi, Menashe; and Merker, George, 4,301,728, Cl. 101-220.000.

AMF Incorporated: *See*—
Kaenel, Reginald A., 4,302,010, Cl. 273-54.00C.

AMP Incorporated: *See*—
Petuch, Andrew J., 4,301,921, Cl. 206-330.000.

Amsted Industries Incorporated: *See*—
Altherr, Russell G., 4,301,932, Cl. 213-76.000.

Amtel, Inc.: *See*—
Jansen, Martin B., 4,301,840, Cl. 141-98.000.

Ancell, Herbert G., to BankAmerica Corporation. Means for holding flexible sheets. 4,301,917, Cl. 206-39.500.

Ancona, John A.: *See*—
Hierholzer, Frank J., Jr.; Ancona, John A.; and Shelton, Gerald L., 4,302,508, Cl. 428-367.000.

Anderson Bros. Mfg. Co.: *See*—
Stohlquist, Roger H., 4,301,843, Cl. 141-172.000.

Anderson, John E., to Phillips Petroleum Company. Control of a fractional distillation column. 4,302,229, Cl. 62-21.000.

Anderson, Roy A. Vaginal syringe. 4,301,798, Cl. 128-239.000.

Anderson, Thomas W. Quick stack building block. 4,301,637, Cl. 52-594.000.

Andersson, Par M., to Tetra Pak International AB. Method and an arrangement for the compensation of inertia forces in the indexing movement of a machine element. 4,301,696, Cl. 74-821.000.

Ando, Tetsuya: *See*—
Udagawa, Hideyuki; Ando, Tetsuya; and Kibayashi, Iwao, 4,302,251, Cl. 106-92.000.

Andreev, Anatoly V.: *See*—
Pronman, Izmail M.; Antonov, Evgeny I.; Barit, Izrail Y.; Andreev, Anatoly V.; and Kazantsev, Alexandr M., 4,302,285, Cl. 376-159.000.

Andry, Louis L.; and Hoover, Michael C., to Geosource Inc. Trichromatic beam splitter. 4,302,769, Cl. 358-55.000.

Anic S.p.A.: *See*—
Stein, Richard B., 4,302,433, Cl. 423-498.000.

Antonov, Evgeny I.: *See*—
Pronman, Izmail M.; Antonov, Evgeny I.; Barit, Izrail Y.; Andreev, Anatoly V.; and Kazantsev, Alexandr M., 4,302,285, Cl. 376-159.000.

Apex Chemical Company, Inc.: *See*—
Hermann, Gerson; Patel, Babubhai C.; and Baer, Emil, 4,302,203, Cl. 8-490.000.

Aragon Martinez, Juan J.: *See*—
Alvarez Berenguer, Antonio; Sanchez Montero, Fernando R.; and Aragon Martinez, Juan J., 4,302,594, Cl. 556-425.000.

Arai, Kenzo. Caliper type brake for bicycles. 4,301,894, Cl. 188-24.190.

Arai, Kozo: *See*—
Kotani, Teizo; Nagato, Masaki; and Arai, Kozo, 4,302,361, Cl. 252-503.000.

Arai, Masatoshi; and Futatsumori, Koji, to Shin-Etsu Chemical Co., Ltd. Room temperature-curable polyoxyalkylene polyether compositions. 4,302,571, Cl. 528-32.000.

Arakawa Kagaku Kogyo Kabushiki Kaisha: *See*—
Matsuo, Kohtaro; and Tsuchida, Seiichi, 4,302,371, Cl. 260-28.50R.

Araki, Kazuo, to Kabushiki Kaisha Fujikoshi. Solenoid apparatus. 4,302,743, Cl. 335-251.000.

Arbed Societe Anonyme: *See*—
Elineau, Hubert, 4,301,720, Cl. 100-12.000.

Arce, Carlos L. Device for the ascension and descension of high altitudes. 4,301,892, Cl. 182-233.000.

Arciniega Blanco, Moises. Bullet for smooth bore shotguns. 4,301,733, Cl. 102-513.000.

Arenz, Bruno, to Losenhausen Maschinenbau AG. Vibratory compacting roller. 4,302,129, Cl. 404-117.000.

Argus Chemical Corporation: *See*—
Halle, Reidar; and Peterson, David, 4,302,569, Cl. 526-231.000.

Armco Inc.: *See*—
Grisch, William E., 4,302,499, Cl. 428-236.000.

Armstrong, John C.: *See*—
Palson, Richard C.; and Armstrong, John C., 4,301,949, Cl. 222-548.000.

Arnold, Bernhard: *See*—
Lindner, Christian; Ott, Karl-Heinz; Arnold, Bernhard; Kowitz, Friedrich; and Kuhlmann, Dieter, 4,302,378, Cl. 260-31.600.

Arrowlite Tools Limited: *See*—
Cooper, Gerald, 4,302,797, Cl. 362-119.000.

Artamonov, Alexei V.: *See*—
Lunev, Evgeny I.; Leonov, Alexandr P.; Kosyreva, Nina P.; Kosyrev, Felix K.; Timofeev, Valery A.; Pekh, Anatoly K.; Kononykhin, Alexei S.; and Artamonov, Alexei V., 4,301,680, Cl. 73-190.0EW.

Artweger, Wolfgang. Energy conversion apparatus. 4,301,789, Cl. 126-439.000.

Arvin Industries, Inc.: *See*—
Chesnut, Amos E.; and Pittman, Carl R., 4,302,663, Cl. 219-497.000.

Arvisenet, Jacques, to La Telemecanique Electrique. Contact breaker with magnetic arc blowing. 4,302,644, Cl. 200-147.00R.

Asada, Akihiro: *See*—
Tanaka, Hiromichi; Imamura, Osamu; and Asada, Akihiro, 4,302,833, Cl. 369-217.000.

Asahi-Dow Limited: *See*—
Yoshimura, Isao; Hata, Hideo; and Kaneko, Takashi, 4,302,557, Cl. 525-211.000.

Asahi Glass Company, Ltd.: *See*—
Oda, Yoshio; Otouma, Hiroshi; and Endoh, Eiji, 4,302,322, Cl. 204-293.000.

Asahi Kasei Kogyo Kabushiki Kaisha: *See*—
Miyake, Tetsuya; Ogawa, Norito; Inada, Kohji; and Takeda, Kunihiko, 4,302,424, Cl. 422-159.000.

Asami, Yukio: *See*—
Kojima, Mitsuo; Aida, Takahiro; and Asami, Yukio, 4,302,357, Cl. 252-437.000.

Ash, Charles C.: *See*—
Bohorquez, Luis A.; Cleary, Michael M.; Ash, Charles C.; Van Osten, Don E.; Pounds, Robert B.; and Sallach, John H., 4,301,709, Cl. 89-11.000.

Ashida, Shigeaki, to Nippon Electric Co., Ltd. Temperature-compensated crystal oscillator. 4,302,731, Cl. 331-116.00R.

Ashland Oil, Inc.: *See*—
Frainier, Leo J.; and Fineberg, Herman, 4,302,397, Cl. 260-347.800.

Ashton, George W.; Manning, Peter; and Lee, Horace G., to Paterson Products Limited. Drum processing apparatus. 4,302,092, Cl. 354-307.000.

Asselineau, Lionel: *See*—
Mikitenko, Paul; and Asselineau, Lionel, 4,302,298, Cl. 203-75.000.

Astle, Brian; and Gallagher, P. Christopher J. Community development educational apparatus. 4,302,016, Cl. 273-278.000.

Ateliers des Charmilles S.A.: *See*—
Piguet, Pierre; and Culaud, Andre, 4,302,151, Cl. 415-209.000.

Ateliers et Chantiers de Bretagne - A.C.B.: *See*—
Nobileau, Philippe C.; Dermy, Rene M.; and Fleury, Guy J., 4,302,652, Cl. 219-72.000.

Atsukawa, Masumi; Matsumoto, Kazuhiro; Seto, Toru; Sera, Toshikuni; and Ukawa, Naohiko, to Mitsubishi Jukogyo Kabushiki Kaisha. Process for controlling nitrogen oxides in exhaust gases and apparatus therefor. 4,302,431, Cl. 423-239.000.

Audesse, Emery G.; and Hartman, Donald W., to GTE Products Corporation. Linear multilamp photoflash unit. 4,302,794, Cl. 362-15.000.

Audi NSU Auto Union Aktiengesellschaft: *See*—
Heck, Klaus, 4,302,482, Cl. 427-34.000.

Audran, Roger G. L.; and Huguenard, Albert P., to Eastman Kodak Company. Magnetic recording elements containing transparent recording layer. 4,302,523, Cl. 430-140.000.

Auerbach, Andrew B.: *See*—
Turbak, Albin F.; El-Kafrawy, Adel; Snyder, Fred W., Jr.; and Auerbach, Andrew B., 4,302,252, Cl. 106-163.00R.

August, Patrick L. Growing frame. 4,301,618, Cl. 47-46.000.

Aulich, Hubert: *See*—
Ahne, Hellmut; Aulich, Hubert; Weidinger, Friedrich; and Rubner, Roland, 4,302,233, Cl. 501-3.430.

Austin, John J.: *See*—
Monckton, Lewis P.; and Austin, John J., 4,301,962, Cl. 229-72.000.

Autelca AG: *See*—
Siegenthaler, Fritz, 4,302,119, Cl. 400-621.000.

Autenrieth, Stephen M.; and Zolton, Raymond P., to Ortho Diagnostics Inc. Buffer system in an anti-thrombin III test. 4,302,538, Cl. 435-13.000.

Automation Industries, Inc.: *See*—
Kutnyak, Thomas A., 4,302,266, Cl. 156-149.000.

Automotive Products Limited: *See*—
Carpenter, Ronald D.; and Stone, Philip A., 4,301,907, Cl. 192-106.200.

B. Walter & Company, Inc.: *See*—
Walter, Thomas G., 4,301,744, Cl. 108-77.000.

Babcock & Wilcox Limited: *See*—
Urquhart, William M., 4,301,749, Cl. 110-261.000.

Babichenko, Ljudmila V.: *See*—
Benyaev, Negmat E.; Boskanian, Razmik A.; Yarovenko, Viktor L.; Durbrov, Jury N.; Ustinnikov, Boris A.; Babichenko, Ljudmila V.; Vakulenko, Mikhail D.; Kramarsky, Nikolai A.; Shamrin, Vitaly F.; Karaichev, Sergei I.; Efremov, Boris V.; and Lantsetova, Tatyana N., 4,302,543, Cl. 435-161.000.

Bader, Clifford J., to Burroughs Corporation. DC Voltage multiplier using phase-sequenced CMOS switches. 4,302,804, Cl. 363-60.000.

Bader, Eugen; and Jauch, Kurt, to Bader, Eugen. Method and apparatus for the production of turned workpieces on multi-station machine tools. 4,301,581, Cl. 29-38.00C.

Baer, Emil: *See*—
Hermann, Gerson; Patel, Babubhai C.; and Baer, Emil, 4,302,203, Cl. 8-490.000.

Baert, Victor R.; and Bowe, Gerald R., to Pako Corporation. Paper feed system for photographic printer. 4,302,101, Cl. 355-74.000.

Baertsch, Richard D.; and Engeler, William E., to General Electric Company. Charge transfer serial-to-parallel converter. 4,302,686, Cl. 307-221.00D.

Bahadir, Mufit; and Payer, Wolfgang, to Ruhrchemie Aktiengesellschaft. Process for the homo- and co-polymerization of α-olefins. 4,302,567, Cl. 526-159.000.

Bailey, Alfred J.; Dean, Malcolm; and Bruce, Norman J. A., to Massey-Ferguson Services N.V. Agricultural mowers. 4,301,643, Cl. 56-13.600.

Bair, James E.: *See*—
Demas, Nickolas P.; Bair, James E.; and Grunder, Robert A., 4,302,697, Cl. 313-113.000.

Baird, William C., Jr.: *See*—
Mauldin, Charles H.; and Baird, William C., Jr., 4,302,359, Cl. 252-466.0PT.

Baker, Albert F.; Blaustein, Eric W.; Deurbrouck, Albert W.; Garvin, John P.; and McKeever, Robert E., to United States of America, Energy. Lignite pellets and methods of agglomerating or pelletizing. 4,302,209, Cl. 44-10.00D.

Baker, Richard H., to Exxon Research & Engineering Co. Filter for polyphase rectifier. 4,302,806, Cl. 363-126.000.

Baker, Stephen J., to Pye (Electronic Products) Limited. Method and apparatus for flushing a delivery tube for automatic liquid sample supply apparatus. 4,302,421, Cl. 422-64.000.

Baker, T. Nelson, III; and Zuckerman, Bernard, to Polaroid Corporation. Novel photosensitive elements and method of stabilizing said elements. 4,302,525, Cl. 430-217.000.

Balbo, Constantino J.; Bruhn, Leonard F.; and Bruhn, Clements E. Can crusher. 4,301,722, Cl. 100-218.000.

Ballard, L. David, to Otto Gerdau Co., The. Furniture. 4,301,985, Cl. 248-188.000.

Baltes, Herbert; and Leupold, Ernst I., to Hoechst Aktiengesellschaft. Process for the manufacture of methylglyoxal. 4,302,609, Cl. 568-471.000.

BankAmerica Corporation: *See*—
Ancell, Herbert G., 4,301,917, Cl. 206-39.500.

Barabas, Eugene S.; Mallya, Prakish; and Gromelski, Stanley J., to GAF Corporation. 2-Hydroxy,alkoxy,methylolbenzophenone intermediate compounds for the manufacture of improved copolymerizable ultraviolet light absorber compounds. 4,302,606, Cl. 568-333.000.

Bardin, Karl D. Metal plated plastic base intaglio printing cylinders & plates and method of manufacture. 4,301,727, Cl. 101-170.000.

Barends, Willem J.; and van Mulken, Alexis J. W., to Stamicarbon, B.V. Melamine container and process for unloading same. 4,301,943, Cl. 222-1.000.

Barit, Izrail Y.: *See*—
Pronman, Izmail M.; Antonov, Evgeny I.; Barit, Izrail Y.; Andreev, Anatoly V.; and Kazantsev, Alexandr M., 4,302,285, Cl. 376-159.000.

Barmag Barmer Maschinenfabrik AG: *See*—
Adenheuer, Frank; and Munnekehoff, Gerd, 4,301,648, Cl. 57-280.000.
Dammann, Peter; Berger, Hans-Peter; Mundelein, Wilfried; Bussmann, Manfred; and Beifuss, Horst, 4,301,578, Cl. 28-256.000.

Barry, William L., to Vapor Corporation. Ambient air timing device. 4,302,159, Cl. 417-46.000.

Bartex Industries Corp.: *See*—
deOliveria, Jose F., 4,302,169, Cl. 425-119.000.

BASF Aktiengesellschaft: *See*—
Cordes, Claus; Hirsch, Guenter; and Hartmann, Heinrich, 4,302,367, Cl. 260-17.00R.
Halbritter, Klaus, 4,302,584, Cl. 544-176.000.
Horn, Peter; Hesse, Anton; Weyland, Peter; Straehle, Wolfgang; and Marx, Matthias, 4,302,551, Cl. 521-163.000.
Volkamer, Klaus; Wagner, Ulrich; and Wagner, Eckhart, 4,302,220, Cl. 55-32.000.

Basler, Peter H.: *See*—
Kandler, James J.; Basler, Peter H.; and Schwehr, Gregory D., 4,302,647, Cl. 200-159.00B.

Bass, Dan M.; and Wang, Fun-Den, to United States of America, Interior. Open surface flotation method. 4,302,051, Cl. 299-2.000.

Batchelder, J. Samuel: *See*—
Koslow, Evan E.; and Batchelder, J. Samuel, 4,301,620, Cl. 47-58.000.

Bauernfeind, Karl; Blaess, Gerhard; and Heindl, Alfred, to Siemens Aktiengesellschaft. Method and apparatus for measuring transmission characteristics of a test object during communication gaps. 4,302,843, Cl. 375-10.000.

Baxendale, William, to Akzo N.V. Vaccines for immunizing egg-laying birds against Egg Drop disease, preparation of said vaccines, and method of use of said vaccines. 4,302,444, Cl. 424-89.000.

Baxter, Bobby G., to Binkley Company, The. Agricultural implement having field and transport modes. 4,301,873, Cl. 172-311.000.

Baxter Travenol Laboratories, Inc.: *See*—
Collins, Henry W., 4,301,800, Cl. 128-272.000.
Cullis, Herbert M.; and Klaiber, Frederick, 4,302,418, Cl. 264-341.000.
Gokcen, Cem M.; and Gilbert, Robert W., 4,301,935, Cl. 215-100.00A.
Pope, J. Lee, Jr.; and Scott, James W., 4,301,799, Cl. 128-272.000.
Ward, Gary A., 4,301,590, Cl. 29-450.000.

Bayer Aktiengesellschaft: *See*—
Findeisen, Kurt; and Linker, Karl-Heinz, 4,302,583, Cl. 544-176.000.
Heywang, Gerhard; Hartmann, Alfons; Hammann, Ingeborg; and Homeyer, Bernhard, 4,302,466, Cl. 424-267.000.
Lindner, Christian; Ott, Karl-Heinz; Arnold, Bernhard; Kowitz, Friedrich; and Kuhlmann, Dieter, 4,302,378, Cl. 260-31.600.
Pisaric, Karl H.; Weber, Karl-Arnold; Traubel, Harro; Brauner, Dieter; and Pahl, Manfred H., 4,302,550, Cl. 521-133.000.
Rosenkranz, Hans J., 4,302,484, Cl. 427-44.000.
Walkowiak, Michael; Podszun, Wolfgang; Leusner, Bernhard; Suling, Carlhans; and Schulz, Hans H., 4,302,376, Cl. 260-29.7UA.

Bayliss, John P.: *See*—
Harrison, Anthony W.; and Bayliss, John P., 4,301,895, Cl. 188-59.000.

BBC Brown, Boveri & Company Limited: *See*—
Glavitsch, Hans; and Guth, Gerhard, 4,302,716, Cl. 323-217.000.
Gubser, Hans-Rudolf; and Kehlhofer, Rolf, 4,301,650, Cl. 60-39.18B.

Beach, Shirley, to Phillips Cables Limited. Method producing a color coded, cellular thermoplastic resin coated wire and the materials necessary for the coating. 4,302,410, Cl. 264-45.900.

Beaulieu, Joseph B. S.: *See*—
Wood, John R.; and Beaulieu, Joseph B. S., 4,301,675, Cl. 73-56.000.

Beaven, John P.; and Varcoe, Beaumont B., to English Clays Lovering Pochin & Company, Ltd. Bags for containing bulk material. 4,301,848, Cl. 150-1.000.

Becher, David Z.; Christenson, Roger M.; Coalson, Richard L.; Pierce, Percy E.; and Schimmel, Karl F., to PPG Industries, Inc. Pigment dispersants for coating compositions. 4,302,560, Cl. 525-327.000.

Becher, David Z.; Christenson, Roger M.; Coalson, Richard L.; Pierce, Percy E.; and Schimmel, Karl F., to PPG Industries, Inc. Pigment dispersants for coating compositions. 4,302,561, Cl. 525-327.000.

Becher, David Z.; Christenson, Roger M.; Coalson, Richard L.; Pierce, Percy E.; and Schimmel, Karl F., to PPG Industries, Inc. Pigment dispersants for coating compositions. 4,302,562, Cl. 525-327.000.

Beckerer, Frank S. Combination siphon and positive action pump. 4,301,826, Cl. 137-149.000.

Beckervordersandforth, Christian: *See*—
Munding, German; Hopmann, Helmut; Sowa, Armin; Beckervordersandforth, Christian; and Terschuren, Walter, 4,301,875, Cl. 175-12.000.

Beckman Instruments, Inc.: *See*—
Cowell, Mark J., 4,301,964, Cl. 233-26.000.
Frankland, Roger A., 4,302,756, Cl. 340-802.000.
Nielsen, Steven T., 4,301,963, Cl. 233-26.000.

Becton, Dickinson and Company: *See*—
Dudley, Betty J., deceased; and Williams, Joel L., 4,302,368, Cl. 260-17.40R.
Percarpio, Edward P., 4,301,936, Cl. 215-247.000.
Stetter, Joseph R.; and Cromer, Raymond B., 4,302,315, Cl. 204-195.00R.

Bedell, John R.; Hemmat, Naim; and Polk, Donald E., to Allied Corporation. Chill roll casting of continuous filament. 4,301,854, Cl. 164-479.000.

Behn, Reinhard; Heywang, Hermann; and Pachonik, Horst, to Siemens Aktiengesellschaft. Apparatus for generating layers on a carrier foil. 4,301,765, Cl. 118-718.000.

Behrens, Walter R. Breakaway reuseable runway marker lamp for airports. 4,302,799, Cl. 362-226.000.

Behringwerke Aktiengesellschaft: *See*—
Bohn, Hans; and Kraus, Walter, 4,302,385, Cl. 260-112.00B.

Beifuss, Horst: *See*—
Dammann, Peter; Berger, Hans-Peter; Mundelein, Wilfried; Bussmann, Manfred; and Beifuss, Horst, 4,301,578, Cl. 28-256.000.

Beigay, Jack M., to Allegheny Ludlum Steel Corporation. Welding silicon steel. 4,302,658, Cl. 219-137.00R.

Belanger, Raymond J.: *See*—
John, Phillip M.; Belanger, Raymond J.; and Paikoff, Myron, 4,302,440, Cl. 424-35.000.

Beling, Ingo, to Siemens Aktiengesellschaft. Directly heated cathode for an electron tube with coaxial electrode design. 4,302,701, Cl. 313-293.000.

Belknap, James L.; and Coppin, William P., to Maxon Corporation. Variable pressure valve. 4,302,178, Cl. 431-19.000.

Bell, Stanley C.: *See*—
Wei, Peter H. L.; and Bell, Stanley C., 4,302,585, Cl. 544-247.000.

Bell Telephone Laboratories, Incorporated: *See*—
Eng, Kai Y.; and Haskell, Barin G., 4,302,838, Cl. 370-100.000.

Fitch, Theodore A., 4,302,812, Cl. 364-483.000.
Fleming, James W., Jr.; and Shiever, John W., 4,302,074, Cl. 350-96.340.
Gordon, Eugene I., 4,302,703, Cl. 315-13.0ST.
MacChesney, John B.; Simpson, Jay R.; and Walker, Kenneth L., 4,302,230, Cl. 65-3.120.
White, Alan D., 4,302,079, Cl. 350-371.000.

Bellis, Harold E., to Du Pont de Nemours, E. I., and Company. Recycling catalyst in preparation of dimethylformamide from dimethylamine and carbon monoxide. 4,302,598, Cl. 564-132.000.

Belman, Michael J., to City of Hope National Medical Center. Ventilatory muscle training apparatus. 4,301,810, Cl. 128-720.000.

Belmuth, Neal W., to Nationwide Ultraseal Inc. Anti-theft device for engine propelled vehicles. 4,302,747, Cl. 340-64.000.

Beltz, William L.: *See—*
Denning, Erwin E.; and Beltz, William L., 4,302,653, Cl. 219-110.000.

Bemis Company, Inc.: *See—*
Bogart, William M., 4,301,925, Cl. 206-616.000.

Bendayan, Jacques; and Jocteur, Robert, to Les Cables de Lyon S.A. Optical fibre with a protective covering. 4,302,073, Cl. 350-96.230.

Benedick, Edward H., to Regenerative Environmental Equipment Co., Inc. Thermal regeneration outlet by-pass system. 4,302,426, Cl. 422-173.000.

Bennett, Phillip P.: *See—*
Taylor, Richard J.; and Bennett, Phillip P., 4,302,776, Cl. 358-160.000.

Bennett, Robert A. Nail care carousel. 4,301,821, Cl. 132-75.600.

Bennett, William T.; and Parks, Bennie L. Microperforation of cigarette tipping paper by use of laser beam. 4,302,654, Cl. 219-121.0LL.

Benning, Jack G., Jr.: *See—*
Maltby, Frederick L.; Loewenstern, Kenneth M.; and Benning, Jack G., Jr., 4,301,681, Cl. 73-304.00C.

Benoit, Michel; and Gerlach, Pierre, to Thomson-CSF. Capacitive coupling device for an electron tube. 4,302,705, Cl. 315-39.000.

Benson, Gregory C.: *See—*
Burton, Robert S.; Rundberg, Sten I.; Vaughn, James V.; Williams, Thomas P.; and Benson, Gregory C., 4,301,866, Cl. 166-260.000.

Benteler, Hubertus; Streubel, Wolfgang; and Olszewski, Egon, to Benteler-Werke A.G. Method series production of an outer column of a safety steering column for automotive vehicles. 4,301,959, Cl. 228-102.000.

Benteler-Werke A.G.: *See—*
Benteler, Hubertus; Streubel, Wolfgang; and Olszewski, Egon, 4,301,959, Cl. 228-102.000.

Benyaev, Negmat E.; Boskanian, Razmik A.; Yarovenko, Viktor I.; Durbrov, Jury N.; Ustinnikov, Boris A.; Babichenko, Ljudmila V.; Vakulenko, Mikhail D.; Kramarsky, Nikolai A.; Shamrin, Vitaly F.; Karaichev, Sergei I.; Efremov, Boris V.; and Lantsetova, Tatyana N. Process and apparatus for producing starch-containing feedstock hydrolysates for alcoholic fermentation. 4,302,543, Cl. 435-161.000.

Berg, John L. Wave pump apparatus. 4,302,161, Cl. 417-333.000.

Bergen, Richard F.: *See—*
Gundlach, Robert W.; and Bergen, Richard F., 4,302,094, Cl. 355-3.0DD.

Berger, Hans-Peter: *See—*
Dammann, Peter; Berger, Hans-Peter; Mundelein, Wilfried; Bussmann, Manfred; and Beifuss, Horst, 4,301,578, Cl. 28-256.000.

Berger, Harvey L.; and Brandow, Charles R., to Sono-Tek Corporation. Transducer assembly, ultrasonic atomizer and fuel burner. 4,301,968, Cl. 239-102.000.

Berggren, Torsten L. Machine for producing wood shavings from chips. 4,301,846, Cl. 144-162.00R.

Berlin, Herbert: *See—*
Wahle, Gunter; Greve, Heinz; and Berlin, Herbert, 4,301,816, Cl. 131-88.000.

Berry, Milton E.; and Pariani, Ronald L., to Southwire Company. Continuous copper melting furnace. 4,301,997, Cl. 266-236.000.

Berry, William W.; and Henrickson, Angus V., to International Minerals & Chemical Corporation. Recovery of uranium from wet-process phosphoric acid. 4,302,427, Cl. 423-10.000.

Bertolacini, Ralph J.: *See—*
Pellet, Regis J.; and Bertolacini, Ralph J., 4,302,358, Cl. 252-441.000.

Bertram, James L.: *See—*
Doorakian, George A.; and Bertram, James L., 4,302,574, Cl. 528-89.000.

Best Lock Corporation: *See—*
Best, Walter E.; and Foshee, William R., 4,301,667, Cl. 70-380.000.

Best, Walter E.; and Foshee, William R., to Best Lock Corporation. Tubular latch bolt retracting mechanism. 4,301,667, Cl. 70-380.000.

Bhowmik, Santi R.: *See—*
Lewinger, Nathan; and Bhowmik, Santi R., 4,301,718, Cl. 99-359.000.

Bialek, Rene F., to Texaco Canada Inc. Tar sands emulsion-breaking process. 4,302,326, Cl. 208-188.000.

Bianchi, Giuseppe: *See—*
deNora, Vittorio; Bianchi, Giuseppe; and Nidola, Antonio, 4,302,321, Cl. 204-291.000.

Bickel, Martin; Geiger, Rolf; Leeb, Richard; and Petri, Walter, to Hoechst Aktiengesellschaft. Secretin preparations with intensified and protracted action, process for their manufacture, their use as well as dihydroxybenzoyl-L-tyrosine. 4,302,448, Cl. 424-177.000.

Bigelow-Sanford, Inc.: *See—*
Mueller, Helmut C.; and Gallagher, Harry G., 4,301,577, Cl. 26-2.00R.

Bignell, Evan S. W., to Domtar Inc. Modular conduit unit. 4,301,838, Cl. 138-112.000.

Bingham, Robert E.; Durst, Richard R.; Fabris, Hubert J.; Hargis, Ivan G.; Livigni, Russell A.; and Aggarwal, Sundar L., to General Tire & Rubber Co., The. Solution polymerization. 4,302,568, Cl. 526-187.000.

Binkley Company, The: *See—*
Baxter, Bobby G., 4,301,873, Cl. 172-311.000.

Bio-Dynamics, Inc.: *See—*
Driskell, Thomas D., 4,302,188, Cl. 433-173.000.

Biomed Research Inc.: *See—*
Rucker, Perry G., 4,302,577, Cl. 536-118.000.

Bizzarro, Peter, to United Technologies Corporation. Heat exchanger closure bar construction. 4,301,863, Cl. 165-166.000.

Bjork, Bjorn V. B.: *See—*
Albertsson, Nils L.; Albertsson, Tor A.; Nordell, Lennart R.; Bjork, Bjorn V. B.; and El-Sayed, Refaat M., 4,302,677, Cl. 250-429.000.

Black Clawson Company, The: *See—*
Martin, Andrew C., 4,302,327, Cl. 209-240.000.

Blaess, Gerhard: *See—*
Bauernfeind, Karl; Blaess, Gerhard; and Heindl, Alfred, 4,302,843, Cl. 375-10.000.

Blain, Sylvain: *See—*
Mendy, Francois; Blain, Sylvain; and Domer, Roland, 4,302,477, Cl. 426-250.000.

Blake, Scottie L. Ascot-like garment. 4,301,548, Cl. 2-91.000.

Blakeslee, Gerald A. Apparatus and method for extracting bellies from clam meat. 4,301,571, Cl. 17-51.000.

Blanchard, Clarence E., to Outboard Marine Corporation. Marine propulsion unit including propeller shaft thrust transmitting means. 4,302,196, Cl. 440-75.000.

Blaustein, Eric W.: *See—*
Baker, Albert F.; Blaustein, Eric W.; Deurbrouck, Albert W.; Garvin, John P.; and McKeever, Robert E., 4,302,209, Cl. 44-10.00D.

Bleeks, Thomas W.: *See—*
Brindisi, Frank A., Jr.; Bleeks, Thomas W.; and Sullivan, Thomas E., 4,302,246, Cl. 75-101.00R.

Blevins, Theodore J., to General Electric Company. Lubrication system for transmission of automatic clothes washing machine. 4,301,666, Cl. 68-23.700.

Blitzer, Sidney M.; and Wilder, Harry D., to Ethyl Corporation. Sizing process and composition. 4,302,283, Cl. 162-158.000.

Bloise, Sherry. Rain cape foldable into an enclosed handbag. 4,301,547, Cl. 2-88.000.

Bly, Vincent T., to United States of America, Army. Technique for optical non-uniformity correction of an imaging system. 4,302,673, Cl. 250-332.000.

Boehringer Mannheim GmbH: *See—*
Gundermann, Karl-Dietrich; Wulff, Karl; Staehler, Fritz; and Linke, Hans-Ralf, 4,302,537, Cl. 435-7.000.

Boeing Company, The: *See—*
Hawkins, Patrick J., 4,302,666, Cl. 235-404.000.
Injerd, William G., 4,302,271, Cl. 156-293.000.
Mack, John C., 4,302,154, Cl. 416-114.000.
Olason, Ray, 4,301,984, Cl. 244-137.00R.

Bogart, William M., to Bemis Company, Inc. Bag with opening and reclosing feature. 4,301,925, Cl. 206-616.000.

Boggs, John N. Game-fish preserving device. 4,301,920, Cl. 206-315.00R.

Bohg, Armin; and Hartmann, Kurt, to International Business Machines Corporation. Electrode guide for metal paper printers. 4,302,700, Cl. 313-292.000.

Bohn, Hans; and Kraus, Walter, to Behringwerke Aktiengesellschaft. Placenta-specific tissue protein PP_{10}. 4,302,385, Cl. 260-112.00B.

Bohorquez, Luis A.; Cleary, Michael M.; Ash, Charles C.; Van Osten, Don E.; Pounds, Robert B.; and Sallach, John H., to Hughes Helicopters, Inc. Mechanical anti-hangfire system. 4,301,709, Cl. 89-11.000.

Bohsei Enterprise, Ltd.: *See—*
Shigehiro, Motoichi, 4,302,475, Cl. 426-53.000.

Bol, Johannes; Classen, Meinhard; Gunther, Rainer; Hugemann, Bernhard; and Scheiding, Uwe, to Siemens Aktiengesellschaft. Endoscope with electric image transmission. 4,301,790, Cl. 128-6.000.

Bolt Associates, Inc.: *See—*
Fiske, Augustus H., Jr., 4,301,887, Cl. 181-107.000.

Bom, Cornelis J. G.: *See—*
van der Lely, Ary; and Bom, Cornelis J. G., 4,301,871, Cl. 172-49.500.

Bombardier-Rotex Gesellschaft m.b.H.: *See—*
Kostron, Gerhard, 4,301,885, Cl. 180-205.000.

Bononi, Walter H. Eye glasses. 4,302,080, Cl. 351-139.000.

Boomer, Daryl R.: *See—*
Gibson, James B.; Boomer, Daryl R.; and Schoellhorn, Henry, III, 4,301,888, Cl. 181-114.000.

Booth, Franklin W.; and Bruce, Robert A., to United States of America, National Aeronautics and Space Administration. Air removal device. 4,302,223, Cl. 55-158.000.

Boots Company Limited, The: *See—*
Davies, Roy V.; Fraser, James; Nichol, Kenneth J.; Parkinson, Raymond; Sim, Malcolm F.; and Yates, David B., 4,302,460, Cl. 424-258.000.

Borg-Warner Chemicals, Inc.: *See—*
Falk, John C., 4,302,555, Cl. 525-96.000.
Valdiserri, Leo L.; and Bullock, Elyse M., 4,302,383, Cl. 260-45.80N.

Borzym, John J. Cylinder operated swinging ram cutoff press. 4,301,723, Cl. 100-271.000.

Bosch & Pierburg System oHG: *See—*
Hartel, Guunter; and Schurfeld, Armin, 4,302,407, Cl. 261-130.000.

Boskanian, Razmik A.: *See—*
Benyaev, Negmat E.; Boskanian, Razmik A.; Yarovenko, Viktor I.; Durbrov, Jury N.; Ustinnikov, Boris A.; Babichenko, Ljudmila V.; Vakulenko, Mikhail D.; Kramarsky, Nikolai A.; Shamrin, Vitaly F.; Karaichev, Sergei I.; Efremov, Boris V.; and Lantsetova, Tatyana N., 4,302,543, Cl. 435-161.000.

Bouricius, Willard G.; and Stuckert, Paul E., to International Business Machines Corporation. Method and apparatus for secure message transmission for use in electronic funds transfer systems. 4,302,810, Cl. 364-200.000.

Bourns Medical Systems, Inc.: *See—*
Vicenzi, Reno L.; and Smargiassi, Paul R., 4,302,640, Cl. 200-81.00R.

Bouvier d'Ivoire, Jean-Baptiste B. F.; Cauhape, Michel J. B.; and Lager, Jean-Paul, to Le Materiel Telephonique Thomson-CSF. Monitoring circuit for time-division switching network. 4,302,836, Cl. 370-13.000.

Bowe, Gerald R.: *See—*
Baert, Victor R.; and Bowe, Gerald R., 4,302,101, Cl. 355-74.000.

Bowser, Dale A.; and Howard, Gordon L. Card controlled alignment game. 4,302,015, Cl. 273-271.000.

Boyd, Thomas J. Machine for closing standing seams of sheet metal roofing. 4,301,587, Cl. 29-243.500.

Boyle, George J.; and Coleclough, Norman, to Shell Oil Company. Well flow sampling system. 4,301,679, Cl. 73-155.000.

Boyles, Robert L.; and Polonsky, Samuel, to General Electric Company. Support arrangement for a flexible sound generating diaphragm. 4,302,695, Cl. 310-324.000.

Bradfield, Ganey W.; and Cragin, Glynn P., Jr., to General Dynamics Corporation. Propulsion system for a V/STOL airplane. 4,301,980, Cl. 244-12.500.

Brandow, Charles R.: *See—*
Berger, Harvey L.; and Brandow, Charles R., 4,301,968, Cl. 239-102.000.

Brasseries Kronenbourg: *See—*
Hamelin, Benoit; and Constant, Brigitte, 4,301,922, Cl. 206-428.000.

Braun, Dieter: *See—*
Mehren, Herbert; and Braun, Dieter, 4,301,739, Cl. 104-247.000.

Braun, Ernst; and Braun, Gert, to Halbach & Braun. Chain scraper conveyor chute. 4,301,913, Cl. 198-735.000.

Braun, Gert: *See—*
Braun, Ernst; and Braun, Gert, 4,301,913, Cl. 198-735.000.

Brauner, Dieter: *See—*
Pisaric, Karl H.; Weber, Karl-Arnold; Traubel, Harro; Brauner, Dieter; and Pahl, Manfred H., 4,302,550, Cl. 521-133.000.

Bridgestone Tire Company Limited: *See—*
Narumiya, Tsuneaki, 4,302,502, Cl. 428-311.000.

Briggs, Stanley E. Spare tire carrier. 4,301,954, Cl. 224-42.230.

Briley, George C.: *See—*
Martin, Walter H.; Briley, George C.; and Pao, Peter Y. M., 4,301,659, Cl. 62-57.000.

Brill, Henry L., to Bulova Watch Company. Galvanometer-type motor. 4,302,720, Cl. 324-146.000.

Brindisi, Frank A., Jr.; Bleeks, Thomas W.; and Sullivan, Thomas E., to Enthone, Incorporated. Solution and method for selectively stripping alloys containing nickel with gold, phosphorous or chromium from stainless steel and related nickel base alloys. 4,302,246, Cl. 75-101.00R.

Bristol-Myers Company: *See—*
Kaplan, Murray A.; and Granatek, Alphonse P., 4,302,446, Cl. 424-131.000.

Britax (Wingard) Limited: *See—*
Cunningham, Douglas J., 4,301,576, Cl. 24-230.0AL.

Broadhurst, Michael J.: *See—*
Hassall, Cedric H.; Broadhurst, Michael J.; and Thomas, Gareth J., 4,302,398, Cl. 260-365.000.

Brock, Josef; and Surkamp, Paul, to Maschinenfabrik Carl Zangs Aktiengesellschaft. Rotation shaft machine. 4,301,905, Cl. 192-71.000.

Brock, Steven B.: *See—*
Lockwood, Hanford N., Jr.; Siegert, Louis D.; and Brock, Steven B., 4,301,747, Cl. 110-171.000.

Brodie, Benjamin T., to John Fluke Mfg. Co., Inc. Sample and hold circuit. 4,302,689, Cl. 307-353.000.

Brois, Stanley J.; and Gutierrez, Antonio, to Exxon Research & Engineering Co. Lactone oxazolines as oleaginous additives. 4,302,395, Cl. 260-343.600.

Brooks, William I., Jr.: *See—*
Goldin, Gerald; and Brooks, William I., Jr., 4,301,946, Cl. 222-113.000.

Brother Kogyo Kabushiki Kaisha: *See—*
Kato, Masataka; and Shirai, Hiroo, 4,301,755, Cl. 112-158.00E.

Brown, Boveri & Cie Aktiengesellschaft: *See—*
Eisele, Dieter, 4,302,767, Cl. 357-79.000.

Brown Company: *See—*
Haas, Richard G., 4,301,640, Cl. 53-478.000.

Brown, J. W. Fishing lure retriever. 4,301,610, Cl. 43-17.200.

Brown, John V., to Fosroc International Limited. Anchor elements. 4,302,131, Cl. 405-260.000.

Brown, Kenard D. Automatic pump for deep wells. 4,302,158, Cl. 417-20.000.

Brown, Robert E.: *See—*
Scarzello, John F.; Lenko, Daniel S.; Krall, Albert D.; Grine, Wayne R.; Brown, Robert E.; Usher, George W.; Mills, Milton K.; and Syeles, Albert M., 4,302,746, Cl. 340-38.00L.

Brown & Williamson Tobacco Corporation: *See—*
Davies, Ken W.; and Disch, Don J., 4,301,819, Cl. 131-302.000.

Bruce, Norman J. A.: *See—*
Bailey, Alfred J.; Dean, Malcolm; and Bruce, Norman J. A., 4,301,643, Cl. 56-13.600.

Bruce, Robert A.: *See—*
Booth, Franklin W.; and Bruce, Robert A., 4,302,223, Cl. 55-158.000.

Bruene, Warren B., to Rockwell International Corporation. Carrier transmission through harmonic polluted medium. 4,302,844, Cl. 375-58.000.

Bruhn, Clements E.: *See—*
Balbo, Constantino J.; Bruhn, Leonard F.; and Bruhn, Clements E., 4,301,722, Cl. 100-218.000.

Bruhn, Leonard F.: *See—*
Balbo, Constantino J.; Bruhn, Leonard F.; and Bruhn, Clements E., 4,301,722, Cl. 100-218.000.

Brunet, Maurice, to Societe Europeenne de Propulsion. Removable magnetic suspension system. 4,302,061, Cl. 308-10.000.

Bruni, Frank J., to Texas Instruments Incorporated. Growing gadolinium gallium garnet with calcium ions. 4,302,280, Cl. 156-617.0SP.

Brunner, Rudolf, to Heilmeier & Weinlein Fabrik fur Oel-Hydraulik GmbH & Co., KG. Control valve. 4,301,837, Cl. 137-625.680.

Bruns, Klaus; and Weber, Ursula, to Henkel Kommanditgesellschaft auf Aktien. Perfume compositions containing 4(5)-acetyl-7,7,9(7,9,9)-trimethylbicyclo[4.3.0]non-1-ene. 4,302,363, Cl. 252-522.00R.

Bryant, Gerald F. Powered tilting transom for outboard boats. 4,302,195, Cl. 440-61.000.

BS&B Safety Systems, Inc.: *See—*
Wood, Loren E.; Allen, Jerome D.; Clift, Miner E.; Kays, Jerry W.; and Forsythe, Calvin C., 4,301,938, Cl. 220-89.00A.

Buchanan, James E.; and Damon, Daniel G., to United States of America, Air Force. Power supply sequencing apparatus. 4,302,791, Cl. 361-86.000.

Buchholz, Bernard; and Dzierza, Edward J., to Pennwalt Corporation. Process for the manufacture of dimethyl sulfide. 4,302,605, Cl. 568-60.000.

Buchi, George H.; and Wuest, Hans, to Firmenich SA. Process for the preparation of novel unsaturated macrocyclic ketones. 4,302,607, Cl. 568-352.000.

Buckner, Carrol E.; Cook, C. Glenn; and Kane, Thomas J., to Cebu Corporation. Three wall forced air heating unit. 4,301,783, Cl. 126-63.000.

Bullock, Elyse M.: *See—*
Valdiserri, Leo L.; and Bullock, Elyse M., 4,302,383, Cl. 260-45.80N.

Bulova Watch Company: *See—*
Brill, Henry L., 4,302,720, Cl. 324-146.000.

Bunting, Pamela M.: *See—*
Schulz, J. Gustav; and Bunting, Pamela M., 4,302,539, Cl. 435-68.000.

Burge, Donald G., to Parker-Hannifin Corporation. Tube coupling. 4,302,036, Cl. 285-323.000.

Burgmeier, Lyman R.; McCarty, Frederick B.; and Silver, Alexander, to Garrett Corporation, The. Wedge shaped permanent magnet rotor assembly with magnet cushions. 4,302,693, Cl. 310-156.000.

Burkland, Raymond A. Method and apparatus for lift-slab building construction. 4,301,630, Cl. 52-126.000.

Burmeister, Robert J.; Heckman, Russell W.; Miller, Robert C.; and Nickey, George A., to Owens-Illinois, Inc. Apparatus for forming tubular plastic sleeves for application to bottles. 4,302,275, Cl. 156-446.000.

Burnett, Archibald L.: *See—*
Miller, John C.; Burnett, Archibald L.; and Scarola, Leonard S., 4,302,409, Cl. 264-45.900.

Burnett, Jackson S., Jr. Corn buttering device. 4,301,762, Cl. 118-16.000.

Burnham, Robert D.; Scifres, Donald R.; and Streifer, William, to Xerox Corporation. Channeled substrate laser with distributed feedback. 4,302,729, Cl. 331-94.50H.

Burroughs Corporation: *See—*
Bader, Clifford J., 4,302,804, Cl. 363-60.000.
Drogichen, Daniel P., 4,302,809, Cl. 364-200.000.
Harbs, Warren F., 4,302,486, Cl. 427-128.000.
Mentler, Sandor, 4,302,807, Cl. 363-134.000.

Burroughs Wellcome Co.: *See—*
Morrison, Robert W., Jr.; Mallory, William R.; and Styles, Virgil L., 4,302,587, Cl. 544-320.000.

Burton, Michael J. Apron assembly. 4,301,544, Cl. 2-49.00A.

Burton, Robert S.; Rundberg, Sten I.; Vaughn, James V.; Williams, Thomas P.; and Benson, Gregory C., to Occidental Oil Shale, Inc. Method and apparatus for igniting an in situ oil shale retort. 4,301,866, Cl. 166-260.000.

Burton, Von L. Reaction engine driven electrical generating system with power load variation control capability. 4,302,683, Cl. 290-4.00R.

Buschor, Karl: *See—*
Ribnitz, Peter; Giesinger, Hans; and Buschor, Karl, 4,302,481, Cl. 427-27.000.

Compuguard Corporation: *See—*
Wadhwani, Romesh T.; and Russial, Joseph F., 4,302,750, Cl. 340-870.020.
Computer Peripherals, Inc.: *See—*
Jewitt, James W.; Johnston, Ross W.; and Platter, Sanford, 4,301,687, Cl. 73-862.450.
Condit, Paul A., Jr. Filter bucket for a flight conveyor. 4,302,331, Cl. 210-160.000.
Conforti, Frederick J., to Pittway Corporation. Multi-function combustion detecting device. 4,302,753, Cl. 340-628.000.
Conner, William C., Jr.; Soled, Stuart L.; Signorelli, Anthony J.; and DeRites, Bruce A., to Allied Corporation. Vanadium containing niobates and tantalates. 4,302,610, Cl. 568-475.000.
Conoco Inc.: *See—*
Washecheck, Paul H., 4,302,618, Cl. 585-1.000.
Yang, Kang; Nield, Gerald L.; and Washecheck, Paul H., 4,302,613, Cl. 568-618.000.
Consolidated Controls Corporation: *See—*
Waller, Henry A., 4,301,993, Cl. 251-167.000.
Consolidated Engravers Corporation: *See—*
Poole, Johnnie L., 4,301,583, Cl. 29-121.200.
Constant, Brigitte: *See—*
Hamelin, Benoit; and Constant, Brigitte, 4,301,922, Cl. 206-428.000.
Conway, Gerald A. Shelf display clip. 4,301,987, Cl. 248-221.400.
Cook, C. Glenn: *See—*
Buckner, Carrol E.; Cook, C. Glenn; and Kane, Thomas J., 4,301,783, Cl. 126-63.000.
Cooksey, James: *See—*
Farr, Steve M., 4,301,629, Cl. 52-99.000.
Cooley, Jack S.; and Ziecker, Roger A., to Mead Corporation, The. Divider screws. 4,301,912, Cl. 198-436.000.
Cooper, Gerald, to Arrowlite Tools Limited. Hand tools. 4,302,797, Cl. 362-119.000.
Cooper, Leon C.: *See—*
Haines, William H.; and Cooper, Leon C., 4,301,674, Cl. 73-1.00G.
Copal Company Limited: *See—*
Harase, Toshikatsu; Saito, Toshihisa; and Inoue, Nobuyoshi, 4,302,091, Cl. 354-246.000.
Coplan, Myron J.; and Lopatin, George, to Albany International Corp. Sorbent-cored textile yarns. 4,302,509, Cl. 428-398.000.
Coppin, William P.: *See—*
Belknap, James L.; and Coppin, William P., 4,302,178, Cl. 431-19.000.
Cordes, Claus; Hirsch, Guenter; and Hartmann, Heinrich, to BASF Aktiengesellschaft. Paper-coating compositions. 4,302,367, Cl. 260-17.00R.
Cordis Corporation: *See—*
Peers-Trevarton, Charles A.; Tarjan, Peter P.; Vadas, Stephen F.; and Dorman, Frederick S., 4,301,805, Cl. 128-419.00P.
Cornelius Engineering Center, Inc.: *See—*
Cornelius, Richard T., deceased; and Lareau, Richard G., executor, 4,301,971, Cl. 239-351.000.
Cornelius, Richard T., deceased; and by Lareau, Richard G., executor, to Cornelius Engineering Center, Inc. Electrically-driven spray gun. 4,301,971, Cl. 239-351.000.
Corning Glass Works: *See—*
Luers, George A., 4,302,235, Cl. 65-30.110.
Corning Glasss Works: *See—*
Danielson, Paul S., 4,302,250, Cl. 501-70.000.
Corson, Claude E.: *See—*
Zaderej, Andrew, 4,302,670, Cl. 250-324.000.
Cosack, Klaus; Hein, Wolfgang; and Neumann, Manfred, to Carl Schleicher & Schull GmbH & Co. KG. Backpressure grid plate for pressure filtration system. 4,302,333, Cl. 210-456.000.
Costa, Larry J. Hand-operated lever linkage control. 4,301,694, Cl. 74-518.000.
Costruzioni Meccaniche Leopoldo Pozzi S.p.A.: *See—*
Pozzi, Leopoldo, 4,301,860, Cl. 165-90.000.
Cotereau, Hubert Y.: *See—*
Chazerain, Jacques A.; Cotereau, Hubert Y.; Lallouette, Pierre H.; Legger, Hugues A.; and Lepape, Pierre A. C., 4,302,458, Cl. 424-258.000.
Coulter Electronics, Inc.: *See—*
Fulwyler, Mack J.; and Hatcher, C. William, 4,302,166, Cl. 425-6.000.
Counsilman, James E.: *See—*
Oprean, George; and Counsilman, James E., 4,302,007, Cl. 272-116.000.
Covelli, Frederick M.: *See—*
Reabe, Kenneth G.; Dressler, Hans; and Covelli, Frederick M., 4,302,403, Cl. 260-505.00E.
Cowell, Mark J., to Beckman Instruments, Inc. Swinging tube holder. 4,301,964, Cl. 233-26.000.
Cowie, Christopher G.: *See—*
Curnow, Richard D.; and Cowie, Christopher G., 4,302,414, Cl. 264-137.000.
Cox, Frank T., Jr. Slack adjuster. 4,301,897, Cl. 188-196.0BA.
Cox, John T.; Garber, Michael B.; Jasper, Marilyn A.; and Longshore, Randolph E., to United States of America, Army. Method of manufacture of photodiode. 4,302,531, Cl. 430-317.000.
Cox, Russell; Drilling, Joseph C.; and Reed, Ronald H., to Square D Company. Fusible switch. 4,302,643, Cl. 200-144.00R.
Cozzi, Paolo; Menchetti, Piero; de Carneri, Ivo; and Trane, Franca, to Farmitalia Carlo Erba S.p.A. Substituted N-(β-alkoxy-ethyl)-N-(4-phenoxy-benzyl)-dichloro-acetamides and process for their preparation. 4,302,472, Cl. 424-324.000.
Cragin, Glynn P., Jr.: *See—*
Bradfield, Ganey W.; and Cragin, Glynn P., Jr., 4,301,980, Cl. 244-12.500.
Craighero, Margherita. Powered aerosol spray device. 4,301,970, Cl. 239-338.000.
Crawley, Lantz S.: *See—*
Fanshawe, William J.; McKenzie, Thomas C.; and Crawley, Lantz S., 4,302,589, Cl. 546-201.000.
Creative Industries, Inc.: *See—*
Lake, Connie, 4,302,415, Cl. 264-138.000.
Cristina, Salvatore J. Device for controlling the degree of blowback delay in automatic weapons. 4,301,712, Cl. 89-153.000.
Critchley, Kenneth: *See—*
Shore, John W.; Eyres, James H.; and Critchley, Kenneth, 4,301,634, Cl. 52-389.000.
Cromer, Raymond B.: *See—*
Stetter, Joseph R.; and Cromer, Raymond B., 4,302,315, Cl. 204-195.00R.
Cropper, Edwin: *See—*
Straw, Alan; Cropper, Edwin; and Dillarstone, Alan, 4,302,347, Cl. 252-116.000.
Crosby, Guy A.: *See—*
Dawson, Daniel J.; Wingard, Robert E.; and Crosby, Guy A., 4,302,399, Cl. 260-377.000.
Crowley, Richard P. Method of preparing expandable polystyrene. 4,302,549, Cl. 521-57.000.
Crucible Inc.: *See—*
Hyams, William M., 4,301,991, Cl. 249-174.000.
Culaud, Andre: *See—*
Piguet, Pierre; and Culaud, Andre, 4,302,151, Cl. 415-209.000.
Cullen, Brown, Jr. Ground area marker, especially for a golf course. 4,302,125, Cl. 404-9.000.
Cullis, Herbert M.; and Klaiber, Frederick, to Baxter Travenol Laboratories, Inc. Process for surface finishing insoluble plastics. 4,302,418, Cl. 264-341.000.
Cummings, Darold B.: *See—*
Gustavson, Robert G.; and Cummings, Darold B., 4,302,796, Cl. 362-62.000.
Cunningham, Douglas J., to Britax (Wingard) Limited. Tongue and buckle fastener for a safety belt harness. 4,301,576, Cl. 24-230.0AL.
Curley, Joseph M.: *See—*
Schonfeld, Arnold; and Curley, Joseph M., 4,302,096, Cl. 355-43.000.
Curnow, Richard D.; and Cowie, Christopher G., to Union Carbide Corporation. Method of incorporating multifilament strands of carbon fibers into cement to produce reinforced structures having improved flexural strengths. 4,302,414, Cl. 264-137.000.
Cusato, John, Jr. Filter apparatus with cleaning function. 4,302,330, Cl. 210-107.000.
Cutler, John H.; and Walker, Loren H., to General Electric Company. Fixed gating sequence apparatus and method for an inverter. 4,302,713, Cl. 318-801.000.
Cvacho, Daniel S. Easy open can end construction. 4,301,940, Cl. 220-269.000.
Czech, Joachim; and Sieghart, Hans D., to Czech, Joachim. Dispenser for paste-like products with a manually actuatable piston. 4,301,948, Cl. 222-341.000.
Dabinski, Horst, to Jopp, Rudolf. Device for the insertion of microfiche cards into reading instruments. 4,302,082, Cl. 353-27.00R.
Daimler-Benz Aktiengesellschaft: *See—*
Mehren, Herbert; and Braun, Dieter, 4,301,739, Cl. 104-247.000.
Dale, John G., to Hazel Grove Music Company Ltd. Height adjustable table tops. 4,301,745, Cl. 108-144.000.
Dalebout, Melvin W., to Engineered Sports Products, Inc. Pliable inner boot and injectable fit packs for ski boots. 4,301,564, Cl. 12-146.00R.
Daly, Robert C.; Thompson, Danny R.; and Farid, Samir Y., to Eastman Kodak Company. Photoreactive compositions comprising a light sensitive compound and another compound with reactive site. 4,302,527, Cl. 430-270.000.
Dammann, Peter; Berger, Hans-Peter; Mundelein, Wilfried; Bussmann, Manfred; and Beifuss, Horst, to Barmag Barmer Maschinenfabrik AG. Process and apparatus for texturing thread. 4,301,578, Cl. 28-256.000.
Damon, Daniel G.: *See—*
Buchanan, James E.; and Damon, Daniel G., 4,302,791, Cl. 361-86.000.
Danielson, Paul S., to Corning Glasss Works. Glass envelopes for tungsten-halogen lamps. 4,302,250, Cl. 501-70.000.
Dannenberg, Wolfgang; Heyer, Walter; Doldissen, Theo; and Zimmermann, Manfred, to Riedel-de Haen Aktiengesellschaft. 2,2-Bis[4-(2,3-dibromopropoxy)-3,5-dibromophenyl]-propane process. 4,302,614, Cl. 568-641.000.
Date, Nobuaki: *See—*
Kiuchi, Masayoshi; Date, Nobuaki; and Saito, Syuichiro, 4,302,090, Cl. 354-234.000.
Davies, George G., to Marconi Company Limited, The. Position encoders. 4,302,109, Cl. 356-375.000.
Davies, Ken W.; and Disch, Don J., to Brown & Williamson Tobacco Corporation. Apparatus for prevention of material build-up such as tobacco in a conduit. 4,301,819, Cl. 131-302.000.
Davies, Roy V.; Fraser, James; Nichol, Kenneth J.; Parkinson, Raymond; Sim, Malcolm F.; and Yates, David B., to Boots Company Limited, The. 4-Quinolinones having antihypertensive activity. 4,302,460, Cl. 424-258.000.
Davis, Donald L.; and Strohlein, Adolph J., Jr., to Effective Conservation Systems, Inc. Inflatable heat barrier. 4,301,626, Cl. 52-2.000.

Davy International Aktiengesellschaft: *See—*
Hellmer, Lars; Keunecke, Gerhard; Lell, Rainer; Al-Muddarris, Ghazi R.; Pachaly, Reinhard; Stauffer, Adolf; and Vangala, V. Rao, 4,302,434, Cl. 423-573.00G.
Davy McKee (Oil & Chemicals) Limited: *See—*
Dennis, Alan J., 4,302,394, Cl. 260-343.600.
Dawson, Daniel J.; Wingard, Robert E.; and Crosby, Guy A., to Dynapol. Acetylation of crude reaction products containing polymeric colorants. 4,302,399, Cl. 260-377.000.
Dayco Corporation: *See—*
Goldstone, Edward G.; and Peal, Clayton E., 4,301,763, Cl. 118-308.000.
Dean, Malcolm: *See—*
Bailey, Alfred J.; Dean, Malcolm; and Bruce, Norman J. A., 4,301,643, Cl. 56-13.600.
de Carneri, Ivo: *See—*
Cozzi, Paolo; Menchetti, Piero; de Carneri, Ivo; and Trane, Franca, 4,302,472, Cl. 424-324.000.
Decaux, Jean C. Sanitary unit. 4,301,558, Cl. 4-420.000.
DeCristofaro, Nicholas J.; and Sexton, Peter, to Allied Corporation. Nickel brazed articles. 4,302,515, Cl. 428-680.000.
Deem, William C.; Esposito, Robert; Littler, Laurence L.; and Sullivan, Robert S., to Eli Bridge Co Inc. Mobile amusement ride. 4,302,004, Cl. 272-29.000.
DeFever, Gene C. Modular platform and camera support mounting for racing vehicle. 4,301,955, Cl. 224-273.000.
Dellacoletta, Brent A.: *See—*
Williams, Frank J., III; and Dellacoletta, Brent A., 4,302,616, Cl. 568-722.000.
Delta Central Refining, Inc.: *See—*
Fletcher, Laird C.; and O'Blasny, Richard H., 4,302,325, Cl. 208-180.000.
De Macedo, Pedro Manoel Buarque: *See—*
Macedo, Pedro B.; Simmons, Joseph H.; and Murai, Shigeo, 4,302,231, Cl. 65-3.150.
Demarne, Henri, to C M Industries. Aromatic ketones having cardiovascular activity. 4,302,601, Cl. 564-351.000.
Demas, Nickolas P.; Bair, James E.; and Grunder, Robert A., to Wagner Electric Corporation. Pressure relief hole seal for a sealed-beam headlamp. 4,302,697, Cl. 313-113.000.
Demoures, Bernard; and Le Coent, Jean-Louis, to Orogil. Process for the preparation of detergent dispersants of high alkalinity for lubricating oils and the product obtained therefrom. 4,302,342, Cl. 252-33.200.
Demukai, Enzo, to Nippon Door Check Mfg. Co., Ltd. Semiautomatic sliding door device with tension spring. 4,301,623, Cl. 49-404.000.
deNavarre, Maison G.; and Meadows, Timothy, to Terry Corporation. Non-irritating antiperspirant. 4,302,443, Cl. 424-68.000.
Dengler, Wolfgang; and Vetter, Hans, to Dengler, Wolfgang. Clasp element. 4,302,123, Cl. 402-80.00R.
Denki Kagaku Kogyo Kabushiki Kaisha: *See—*
Nabeta, Takeshi; Masui, Takeshi; and Hasegawa, Tsuguo, 4,302,554, Cl. 525-71.000.
Udagawa, Hideyuki; Ando, Tetsuya; and Kibayashi, Iwao, 4,302,251, Cl. 106-92.000.
Denning, Erwin E.; and Beltz, William L., to Weltronic Company. Method and apparatus for monitoring and controlling a resistance welding operation. 4,302,653, Cl. 219-110.000.
Dennis, Alan J., to Davy McKee (Oil & Chemicals) Limited. Production of butyrolactone. 4,302,394, Cl. 260-343.600.
Dennison, William T.: *See—*
Hunter, Alexander D., Jr.; and Dennison, William T., 4,302,062, Cl. 308-22.000.
deNora, Vittorio; Bianchi, Giuseppe; and Nidola, Antonio, to Diamond Shamrock Technologies S.A. Novel sintered electrodes. 4,302,321, Cl. 204-291.000.
deOliveria, Jose F., to Bartex Industries Corp. Method and mold for making plastic shoes. 4,302,169, Cl. 425-119.000.
de Polo, Harry R. Pants-type garments and method of making same. 4,301,546, Cl. 2-227.000.
Dera, Alain; and Itey-Bernard, Georges, to Regie Nationale des Usines Renault. Power-assisted steering system. 4,301,882, Cl. 180-153.000.
DeRites, Bruce A.: *See—*
Conner, William C., Jr.; Soled, Stuart L.; Signorelli, Anthony J.; and DeRites, Bruce A., 4,302,610, Cl. 568-475.000.
Dermy, Rene M.: *See—*
Nobileau, Philippe C.; Dermy, Rene M.; and Fleury, Guy J., 4,302,652, Cl. 219-72.000.
DeSantis, Raymond P., to PTX-Pentronix, Inc. Method for compacting an article of powder material and for ejecting the article from a compacting die. 4,302,412, Cl. 264-109.000.
Desprez, Alfred: *See—*
Teetz, Wolfgang; and Desprez, Alfred, 4,301,756, Cl. 112-221.000.
Dessaint, Andre L.: *See—*
Perronin, Jean; and Dessaint, Andre L., 4,302,366, Cl. 252-8.570.
Detroit Edison Company, The: *See—*
Habermas, Robert E., 4,302,335, Cl. 210-651.000.
Deurbrouck, Albert W.: *See—*
Baker, Albert F.; Blaustein, Eric W.; Deurbrouck, Albert W.; Garvin, John P.; and McKeever, Robert E., 4,302,209, Cl. 44-10.00D.
Deutsche Babcock Aktiengesellschaft: *See—*
Pech, Hans-Jurgen; and Schafer, Herbert, 4,301,746, Cl. 110-165.00R.
Deutsche Gold- und Silber-Scheideanstalt: *See—*
Giede, Wolfgang; Koch, Karlheinz; Kolaczinski, Gerhard; Rupilius, Wolfgang; and Stein, Werner, 4,302,354, Cl. 252-392.000.
DeVault, Birch L.: *See—*
Grunert, Kurt A.; Henwood, John J.; and DeVault, Birch L., 4,302,650, Cl. 200-308.000.
Deveney, Charles H., Jr., to Aluminum Company of America. Method for roll pointing a threaded screw. 4,301,563, Cl. 10-10.00R.
Devitt, James J., to General Tire & Rubber Company, The. Method for pretreating glass cords which minimizes cord blows. 4,302,264, Cl. 156-110.00A.
de Vries, Dirk, to Stork Kwant B.V. Control system, particularly for use on ships. 4,301,759, Cl. 114-144.00E.
deVries, Egbert: *See—*
Rafson, Harold J.; and deVries, Egbert, 4,302,226, Cl. 55-238.000.
Diamond Shamrock Technologies S.A.: *See—*
deNora, Vittorio; Bianchi, Giuseppe; and Nidola, Antonio, 4,302,321, Cl. 204-291.000.
Dickmanns, Heinz: *See—*
Nagl, Gert; Ribka, Joachim; Gotsmann, Ulrich; and Dickmanns, Heinz, 4,302,582, Cl. 544-37.000.
Di Giovanni, Augustine; and Di Giovanni, Gloria. Rotary gameboard with removable compartments. 4,302,012, Cl. 273-148.00R.
Di Giovanni, Gloria: *See—*
Di Giovanni, Augustine; and Di Giovanni, Gloria, 4,302,012, Cl. 273-148.00R.
Dillarstone, Alan: *See—*
Straw, Alan; Cropper, Edwin; and Dillarstone, Alan, 4,302,347, Cl. 252-116.000.
Dillner, James R.; and Stone, Hilton F., Jr., to United Technologies Corporation. Method of forming fiber and metal matrix composite. 4,301,584, Cl. 29-156.80B.
Dimmer, Jerry R.; Ponto, Gene D.; Shorma, Edward F.; Shorma, Richard E.; Shorma, William J.; and Miranowski, Duaine L., to Wahpeton Canvas Company, Inc. Roll-up tarp for trailers. 4,302,043, Cl. 296-98.000.
Dingler, Geoffrey L., to Whirlpool Corporation. Water centered cone upper spray arm for dishwashers. 4,301,822, Cl. 134-176.000.
Dinwiddie, C. Ray. Fireplace insert. 4,301,784, Cl. 126-131.000.
DiRosa, Gaetano. Permanent mold for gravity casting of light alloy cylinder heads. 4,301,856, Cl. 164-340.000.
Disch, Don J.: *See—*
Davies, Ken W.; and Disch, Don J., 4,301,819, Cl. 131-302.000.
Ditzig, Albert F., to Molex Incorporated. Hermetically sealed switch assembly. 4,302,637, Cl. 200-6.00R.
Diversified Products Corporation: *See—*
Silberman, Ira J., 4,302,005, Cl. 272-94.000.
Dixon, Dale D.; and Herman, Frederick L., to Air Products and Chemicals, Inc. Paint compositions having wet adhesion characteristics. 4,302,375, Cl. 260-29.6RB.
Dmitrenko, Valentina V.: *See—*
Chernogorenko, Vasily B.; Alzhanov, Tleubai M.; Lynchak, Kima A.; Muchnik, Simon V.; Ishkhanov, Evgeny S.; Sergienko, Vladimir Y.; Sapian, Vladimir G.; Koverya, Vladimir M.; Pobortsev, Mendel E.; Markovsky, Evgeny A.; Dmitrenko, Valentina V.; Bykov, Vladimir I.; Kipchakbaev, Alexandr D.; and Vopilov, Alexandr N., 4,302,249, Cl. 75-143.000.
Dr. Ing. h.c.F. Porsche AG: *See—*
Renz, Heinz, 4,301,668, Cl. 70-422.000.
Dr. Johannes Heidenhain GmbH: *See—*
Schmitt, Walter, 4,302,668, Cl. 250-209.000.
Doldissen, Theo: *See—*
Dannenberg, Wolfgang; Heyer, Walter; Doldissen, Theo; and Zimmermann, Manfred, 4,302,614, Cl. 568-641.000.
Dolfini, Joseph E.: *See—*
Harrison, Boyd L.; and Dolfini, Joseph E., 4,302,581, Cl. 544-27.000.
Doltron AG: *See—*
Manella, Paul, 4,302,164, Cl. 417-474.000.
Domer, Roland: *See—*
Mendy, Francois; Blain, Sylvain; and Domer, Roland, 4,302,477, Cl. 426-250.000.
Domtar Inc.: *See—*
Bignell, Evan S. W., 4,301,838, Cl. 138-112.000.
Wood, John R.; and Beaulieu, Joseph B. S., 4,301,675, Cl. 73-56.000.
Donald, Robert A., III. Flow responsive safety valve. 4,301,833, Cl. 137-521.000.
Donnelly, Bernard P.; and VanSlooten, Roland W., to Lithibar Company, The. Palletizer. 4,302,140, Cl. 414-46.000.
Donovan, James G., to Albany International Corp. Composite waterproof and flame resistant fabrics. 4,302,496, Cl. 428-196.000.
Doorakian, George A.; and Bertram, James L., to Dow Chemical Company, The. Phosphonium phenoxide catalysts for promoting reacting of epoxides with phenols and/or carboxylic acids. 4,302,574, Cl. 528-89.000.
Dore, Roland; and Drouin, Gilbert, to Ecole Polythechnique. Deformable high energy storage tension spring. 4,301,551, Cl. 3-1.000.

Dorina Nahmaschinen GmbH, Firma: *See*—
Meier, Gunter, 4,301,753, Cl. 112-121.110.
Doring, Carl, to Telectronics Pty. Limited. Trailing tine electrode lead. 4,301,815, Cl. 128-785.000.
Dorman, Frederick S.: *See*—
Peers-Trevarton, Charles A.; Tarjan, Peter P.; Vadas, Stephen F.; and Dorman, Frederick S., 4,301,805, Cl. 128-419.00P.
Dorr-Oliver Incorporated: *See*—
Jukkola, Walfred W.; Leon, Albert M.; Van Dyk, Garritt C., Jr.; McCoy, Daniel E.; Fisher, Barry L.; Saiers, Timothy L.; and Karstetter, Marlin E., 4,301,771, Cl. 122-4.00D.
Nicolet, Robert D., 4,302,270, Cl. 156-290.000.
Doto, Shigeaki: *See*—
Nagase, Minoru; and Doto, Shigeaki, 4,302,058, Cl. 303-22.00A.
Dow Chemical Company, The: *See*—
Carswell, Robert; and McGraw, Philip W., 4,302,343, Cl. 252-33.400.
Doorakian, George A.; and Bertram, James L., 4,302,574, Cl. 528-89.000.
Larson, Edwin G.; Haigh, Daniel H.; and Hall, Richard H., 4,302,337, Cl. 210-662.000.
Pero, Richard E., 4,302,183, Cl. 432-225.000.
Vaughn, Walter L., 4,302,563, Cl. 525-330.000.
Drackett Company, The: *See*—
Requejo, Luz P., 4,302,348, Cl. 252-135.000.
Dragerwerk Aktiengesellschaft: *See*—
Pasternack, Adalbert, 4,301,792, Cl. 128-202.260.
Dressler, Hans: *See*—
Reabe, Kenneth G.; Dressler, Hans; and Covelli, Frederick M., 4,302,403, Cl. 260-505.00E.
Drexelbrook Controls, Inc.: *See*—
Maltby, Frederick L.; Loewenstern, Kenneth M.; and Benning, Jack G., Jr., 4,301,681, Cl. 73-304.00C.
Drilling, Joseph C.: *See*—
Cox, Russell; Drilling, Joseph C.; and Reed, Ronald H., 4,302,643, Cl. 200-144.00R.
Driskell, Thomas D., to Bio-Dynamics, Inc. Prosthetic dental implants. 4,302,188, Cl. 433-173.000.
Drogichen, Daniel P., to Burroughs Corporation. External data store memory device. 4,302,809, Cl. 364-200.000.
Drouet, Rene: *See*—
Pancholy, Ranjeet K.; and Drouet, Rene, 4,302,278, Cl. 156-610.000.
Drouin, Gilbert: *See*—
Dore, Roland; and Drouin, Gilbert, 4,301,551, Cl. 3-1.000.
Duba, David E., to Microplex, Inc. Resistor. 4,302,744, Cl. 338-314.000.
Dubois, Gerald. Stone picking machine. 4,301,869, Cl. 171-63.000.
DuBois, Richard, to Wagner Electric Corporation. Glass-to-glass sealing method with conductive layer. 4,302,706, Cl. 315-169.100.
Dubow, Arnold A. Body weight scale with historical record display. 4,301,879, Cl. 177-5.000.
Duddy, James J. Low temperature reflector for industrial lamp. 4,302,801, Cl. 362-345.000.
Dudley, Betty J., deceased (by Dudley, Kenneth H., executor); and Williams, Joel L., to Becton, Dickinson and Company. Nonthrombogenic articles and method of preparation. 4,302,368, Cl. 260-17.40R.
Dudley, Kenneth H., executor: *See*—
Dudley, Betty J., deceased; and Williams, Joel L., 4,302,368, Cl. 260-17.40R.
Duggan, Stephen R.: *See*—
Thompson, David L.; Duggan, Stephen R.; and Roline, Glenn M., 4,301,804, Cl. 128-419.0PG.
Dukel, Cornelis; Hoogerheide, Pieter; and Niehaus, Jan G. C., to Staat der Nederlanden (Staatsbedrijf der Posterijen, Telegrafie en Telefonie). Striking box for retaining the bolt of a door lock. 4,302,039, Cl. 292-341.160.
Dumont, Alian; Piolat, Christian; and Oeillet, Guy, to Jeumont-Schneider. Subscriber's electronic line equipment comprising a two-wire-four-wire conversion circuit for a telephone exchange. 4,302,636, Cl. 179-170.0NC.
Duncan, Norman B. Fireplace log. 4,302,210, Cl. 44-24.000.
Dunlop Limited: *See*—
Simkins, Roy; and Yardley, James F., 4,302,261, Cl. 156-64.000.
Dunn, William J.: *See*—
Merry, Jack D.; and Dunn, William J., 4,301,813, Cl. 128-762.000.
Dunsmoor, Forrest L., to Peachtree Doors, Inc. Casement window operating mechanism. 4,301,622, Cl. 49-342.000.
Du Pont de Nemours, E. I., and Company: *See*—
Bellis, Harold E., 4,302,598, Cl. 564-132.000.
Cherkofsky, Saul C., 4,302,461, Cl. 424-263.000.
Gosser, Lawrence W., 4,302,435, Cl. 423-591.000.
Hoffman, Lewis C.; and Horowitz, Samuel J., 4,302,362, Cl. 252-520.000.
Holyoke, Caleb W., Jr., 4,302,451, Cl. 424-211.000.
Lawes, Bernard C.; and Watts, John C., 4,302,429, Cl. 423-17.000.
Levitt, George, 4,302,241, Cl. 71-92.000.
Squire, Edward N., 4,302,608, Cl. 568-384.000.
Steinmetz, William H., 4,302,373, Cl. 260-29.300.
Van den Hoven, Gerardus, 4,301,579, Cl. 28-282.000.
Durbrov, Jury N.: *See*—
Benyaev, Negmat E.; Boskanian, Razmik A.; Yarovenko, Viktor I.; Durbrov, Jury N.; Ustinnikov, Boris A.; Babichenko, Ljudmila V.; Vakulenko, Mikhail D.; Kramarsky, Nikolai A.; Shamrin, Vitaly F.; Karaichev, Sergei I.; Efremov, Boris V.; and Lantsetova, Tatyana N., 4,302,543, Cl. 435-161.000.
Durling, Harold, to Midland-Ross Corporation. Pneumatic control valve. 4,302,057, Cl. 303-7.000.
Durr, Max. Device for water-sports. 4,301,562, Cl. 9-310.00D.
Durst, Richard R.: *See*—
Bingham, Robert E.; Durst, Richard R.; Fabris, Hubert J.; Hargis, Ivan G.; Livigni, Russell A.; and Aggarwal, Sundar L., 4,302,568, Cl. 526-187.000.
Duwel, C. Edward: *See*—
Eckert, Alton B.; Duwel, C. Edward; and Muller, Arno, 4,302,821, Cl. 364-900.000.
Dworkin, Eugene. Toothpaste dispenser. 4,301,945, Cl. 222-100.000.
Dwyer, Arthur S.: *See*—
Kasevich, Raymond S.; Kolker, Myer; and Dwyer, Arthur S., 4,301,865, Cl. 166-248.000.
Dyachkov, Vasily M.: *See*—
Zhestkov, Vitaly I.; Shlykov, Gennady N.; Dyachkov, Vasily M.; Tikhonov, Valentin N.; and Abduganiev, Abdurakhim, 4,301,574, Cl. 19-288.000.
Dynamit Nobel Aktiengesellschaft: *See*—
Menne, Rolf; and Petters, Willi, 4,301,735, Cl. 102-427.000.
Schoengen, Anton; Schreiber, Georg; and Schroeder, Heinz, 4,302,595, Cl. 562-483.000.
Dynapol: *See*—
Dawson, Daniel J.; Wingard, Robert E.; and Crosby, Guy A., 4,302,399, Cl. 260-377.000.
Dyroff, David R.; Lynch, Gary J.; and Papanu, Victor D., to Monsanto Company. Selectively controlling the hydrolytic stability of acetal carboxylate polymers. 4,302,564, Cl. 525-398.000.
Dziak, Theodore P., to Union Carbide Corporation. Unitary seal and cover support gasket for miniature button cells. 4,302,517, Cl. 429-66.000.
Dzierza, Edward J.: *See*—
Buchholz, Bernard; and Dzierza, Edward J., 4,302,605, Cl. 568-60.000.
E.G.O. Regeltechnik GmbH: *See*—
Kicherer, Robert; and Schilling, Wilfried, 4,302,662, Cl. 219-491.000.
E. R. Squibb & Sons, Inc.: *See*—
Hauck, Frederic P.; and Fox, Rita T., 4,302,453, Cl. 424-244.000.
Eakin, Gerald R.: *See*—
Payne, George T.; and Eakin, Gerald R., 4,301,671, Cl. 72-344.000.
Eastman Kodak Company: *See*—
Audran, Roger G. L.; and Huguenard, Albert P., 4,302,523, Cl. 430-140.000.
Columbus, Richard L., 4,302,313, Cl. 204-195.00R.
Daly, Robert C.; Thompson, Danny R.; and Farid, Samir Y., 4,302,527, Cl. 430-270.000.
Giles, Ralph R.; and Weaver, Max A., 4,302,387, Cl. 260-155.000.
Giles, Ralph R.; and Weaver, Max A., 4,302,390, Cl. 260-158.000.
Greenwald, Rogers J.; and Matteson, Lawrence J., 4,302,084, Cl. 354-25.000.
Jakubowicz, Raymond F.; and Schnipelsky, Paul N., 4,302,420, Cl. 422-63.000.
Lemke, James U., 4,302,790, Cl. 360-119.000.
Polichnowski, Stanley W., 4,302,432, Cl. 423-487.000.
Rumfola, Ross E., 4,302,113, Cl. 366-150.000.
Eberhard, Nobert: *See*—
Krambrock, Wolfgang; and Eberhard, Nobert, 4,301,880, Cl. 177-189.000.
Eberle, Ralph F.: *See*—
Finlayson, James W.; Reyes, Renato D.; Eberle, Ralph F.; Wojcik, Thaddeus A.; Gumbert, James L.; McKeever, Robert B.; Nagy, Emery E.; and Houserman, Howard E., Jr., 4,302,146, Cl. 414-744.00R.
Eckart, Manfred; and Wulf, Peter, to Vorwerk & Co. Interholding GmbH. Hand vacuum cleaner. 4,302,225, Cl. 55-234.000.
Eckert, Alton B.; Duwel, C. Edward; and Muller, Arno, to Pitney-Bowes, Inc. Interposer control for electronic postage meter. 4,302,821, Cl. 364-900.000.
Ecole Polythechnique: *See*—
Dore, Roland; and Drouin, Gilbert, 4,301,551, Cl. 3-1.000.
Edling, Lars G., to Institutet for Verkstadsteknisk Forskning IVF. Method and device for adaptive control of the weld parameters in automatic arc welding processes. 4,302,655, Cl. 219-130.320.
Edwards, David, Jr.; and Lanni, Christopher P., to United States of America, Energy. Method of determining the x-ray limit of an ion gauge. 4,302,679, Cl. 250-489.000.
Efamol Limited: *See*—
Horrobin, David F., 4,302,447, Cl. 424-145.000.
Effective Conservation Systems, Inc.: *See*—
Davis, Donald L.; and Strohlein, Adolph J., Jr., 4,301,626, Cl. 52-2.000.
Efremov, Boris V.: *See*—
Benyaev, Negmat E.; Boskanian, Razmik A.; Yarovenko, Viktor I.; Durbrov, Jury N.; Ustinnikov, Boris A.; Babichenko, Ljudmila V.; Vakulenko, Mikhail D.; Kramarsky, Nikolai A.; Shamrin, Vitaly F.; Karaichev, Sergei I.; Efremov, Boris V.; and Lantsetova, Tatyana N., 4,302,543, Cl. 435-161.000.
Ehrgott, Frederick J.: *See*—
Klioze, Solomon S.; and Ehrgott, Frederick J., 4,302,590, Cl. 546-216.000.
Eickhoff Maschinenfabrik und Eisengiesserei m.b.H: *See*—
Hotger, Karl, 4,302,019, Cl. 277-56.000.
Eidenschink, Rudolf; and Pohl, Ludwig, to Merck Patent Gesellschaft mit Beschrankter Haftung. Fluorophenylcyclohexanes, the preparation thereof and their use as components of liquid crystal dielectrics. 4,302,352, Cl. 252-299.630.

Eisele, Dieter, to Brown, Boveri & Cie Aktiengesellschaft. Controlled power-semiconductor component having an annular cage. 4,302,767, Cl. 357-79.000.
Eising, John P., to A. O. Smith Corporation. Water heating apparatus. 4,301,772, Cl. 122-17.000.
Ejchler, Henry: *See*—
Comer, Glen S., Jr.; and Ejchler, Henry, 4,301,834, Cl. 137-556.000.
Eldin, Sameer H.: *See*—
Stockinger, Friedrich; Eldin, Sameer H.; and Lohse, Friedrich, 4,302,573, Cl. 528-89.000.
Electric Power Research Institute: *See*—
Fisher, Frederick M., 4,301,677, Cl. 73-105.000.
Electric Power Research Institute, Inc.: *See*—
Sharbaugh, John E.; and Howarth, Wesley L., 4,302,296, Cl. 376-290.000.
Eli Bridge Co Inc: *See*—
Deem, William C.; Esposito, Robert; Littler, Laurence L.; and Sullivan, Robert S., 4,302,004, Cl. 272-29.000.
Eli Lilly and Company: *See*—
Kukolja, Stjepan; and Pfeil, Janice L., 4,302,391, Cl. 260-239.00A.
Elineau, Hubert, to Arbed Societe Anonyme. Machine for tying coils of metal wire. 4,301,720, Cl. 100-12.000.
El-Kafrawy, Adel: *See*—
Turbak, Albin F.; El-Kafrawy, Adel; Snyder, Fred W., Jr.; and Auerbach, Andrew B., 4,302,252, Cl. 106-163.00R.
El Khadem, Hassan S.; and Swartz, David L., to Michigan Technological University, Board of Control of. Carminomycin analogue. 4,302,449, Cl. 424-180.000.
Elkins, Christopher W.: *See*—
Cammack, Michael A.; and Elkins, Christopher W., 4,302,186, Cl. 433-80.000.
Elmquist, Lyle F., to Henkel Corporation. Aluminum modified water absorbent composition. 4,302,369, Cl. 260-17.4GC.
El-Sayed, Refaat M.: *See*—
Albertsson, Nils L.; Albertsson, Tor A.; Nordell, Lennart R.; Bjork, Bjorn V. B.; and El-Sayed, Refaat M., 4,302,677, Cl. 250-429.000.
Elson, Ronald D.: *See*—
Michalik, Anthony J.; Thiel, Peter L.; Elson, Ronald D.; and Palmer, James A., 4,301,915, Cl. 198-851.000.
Elter, Claus; Stracke, Wilfried; Stach, Heinrich; Schoening, Josef; and Schwiers, Hans G., to Hochtemperatur-Reaktorbau GmbH. Gas-cooled high temperature reactor with supporting structure having gas conduits therein. 4,302,293, Cl. 376-381.000.
Emerson Electric Co.: *See*—
Hierholzer, Frank J., Jr.; Ancona, John A.; and Shelton, Gerald L., 4,302,308, Cl. 428-367.000.
Ottersbach, Thomas V., 4,302,649, Cl. 200-284.000.
Empire Products, Inc.: *See*—
Newman, Albert P.; and Hertzer, Ronald A., 4,302,066, Cl. 339-82.000.
End Devices, Inc.: *See*—
Welton, Barry S.; and Westerman, G. Wayne, 4,302,157, Cl. 417-12.000.
Enders, George E., to NRM Corporation. Tire building machine. 4,302,274, Cl. 156-401.000.
Endo, Hiroyuki; Ohhira, Hirosi; and Sasaki, Tohru, to Kureha Kagaku Kogyo Kabushiki Kaisha. Polyvinylidene fluoride filaments. 4,302,556, Cl. 525-199.000.
Endoh, Eiji: *See*—
Oda, Yoshio; Otouma, Hiroshi; and Endoh, Eiji, 4,302,322, Cl. 204-293.000.
Eng, Kai Y.; and Haskell, Barin G., to Bell Telephone Laboratories, Incorporated. Apparatus for synchronizing an input signal with a time multiplexed signal. 4,302,838, Cl. 370-100.000.
Engel, Georg; and Spaude, Alfons, to Schloemann-Siemag Aktiengesellschaft. Rolling mill train. 4,301,670, Cl. 72-226.000.
Engeler, William E.: *See*—
Baertsch, Richard D.; and Engeler, William E., 4,302,686, Cl. 307-221.00D.
Engineered Sports Products, Inc.: *See*—
Dalebout, Melvin W., 4,301,564, Cl. 12-146.00R.
English Clays Lovering Pochin & Company, Ltd.: *See*—
Beaven, John P.; and Varcoe, Beaumont B., 4,301,848, Cl. 150-1.000.
Engman, Larry O.: *See*—
Fitzgerald, Timothy P.; Novak, Lubomir; and Engman, Larry O., 4,301,929, Cl. 209-608.000.
Ennio, Corona: *See*—
Imgegnoli, Alessandro; and Ennio, Corona, 4,302,630, Cl. 179-6.070.
Enthone, Incorporated: *See*—
Brindisi, Frank A., Jr.; Bleeks, Thomas W.; and Sullivan, Thomas E., 4,302,246, Cl. 75-101.00R.
Environ Electronic Laboratories, Inc.: *See*—
Whitnah, Gordon R., 4,301,662, Cl. 62-238.400.
Envirotech Corporation: *See*—
Takahashi, Yoshihiro, 4,302,422, Cl. 422-88.000.
Van Note, Robert H., 4,302,328, Cl. 210-714.000.
Equipements Automobiles Marchal: *See*—
Latapie, Jean-Francois, 4,301,778, Cl. 123-426.000.
Erich, Otis G., Jr., to Union Oil Company of California. Rotating eccentric weight apparatus and method for generating coded shear wave signals. 4,302,825, Cl. 367-41.000.
Ernst Leitz Wetzlar GmbH: *See*—
Reinheimer, Guter; and Leiter, Herbert, 4,302,087, Cl. 354-79.000.
Ervine, William J. Locking assembly. 4,302,038, Cl. 292-263.000.
Erwin Sick GmbH, Optik-Elektronik: *See*—
Sick, Erwin, 4,302,105, Cl. 356-237.000.
Eschem Inc.: *See*—
Werber, Gerhardt P., 4,302,570, Cl. 526-320.000.
Escher, Gerd; Harjung, Johann; and Wenning, H. Peter, to Veba Oel AG. Method for the production of synthesis gas. 4,302,353, Cl. 252-373.000.
Esho, Sotaro; and Gokan, Hiroshi, to Nippon Electric Co., Ltd. Thin-film magnetic bubble domain detection device and process for manufacturing the same. 4,302,822, Cl. 365-8.000.
Esposito, Robert: *See*—
Deem, William C.; Esposito, Robert; Littler, Laurence L.; and Sullivan, Robert S., 4,302,004, Cl. 272-29.000.
Esser, Hermann, to Keiper Automobiltechnik GmbH & Co. K.G. Hinge mount for seats having adjustable backrest. 4,302,047, Cl. 297-362.000.
Etablissement Publre Telediffusion de France: *See*—
Akrich, Charles; Lemaire, Jean C.; Maillard, Michel J.; and Ruiz, Michel, 4,302,628, Cl. 179-1.50S.
Ethyl Corporation: *See*—
Blitzer, Sidney M.; and Wilder, Harry D., 4,302,283, Cl. 162-158.000.
Etnestad, Herman: *See*—
Laugerud, Sverre; Etnestad, Herman; and Pedersen, Frode, 4,301,748, Cl. 110-245.000.
Etudes Petrolieres Marines: *See*—
Nobileau, Philippe C.; Dermy, Rene M.; and Fleury, Guy J., 4,302,652, Cl. 219-72.000.
Evans, David H.; and Greenwald, Richard B., to Polaroid Corporation. Synthesis of perfluorodialdehydes. 4,302,612, Cl. 568-604.000.
Evans, Graham, to Ciba-Geigy AG. Optical brightening agents and photographic materials which contain these brightening agents. 4,302,579, Cl. 542-461.000.
Evans, Richard A.; and Rasmussen, Robert F., to Honeywell, Inc. Dual-seal rotary fluid coupling. 4,302,033, Cl. 285-14.000.
Evans, William P.; and Leger, Violeta Z., to Union Carbide Corporation. Cathode comprising the reaction product of bismuth, sulfur and lead or iron. 4,302,520, Cl. 429-194.000.
Everest, Charles E. Infrared thermometer in making stress-degree measurements for irrigation purposes. 4,301,682, Cl. 73-355.00R.
Ewen-Smith, Beverley M.: *See*—
Woodsford, Peter A.; and Ewen-Smith, Beverley M., 4,302,681, Cl. 250-556.000.
Exxon Research & Engineering Co.: *See*—
Baker, Richard H., 4,302,806, Cl. 363-126.000.
Brois, Stanley J.; and Gutierrez, Antonio, 4,302,395, Cl. 260-343.600.
Cocchiara, Franco; Camarsa, Mario; and Garcea, Gian P., 4,301,651, Cl. 60-282.000.
Kaldor, Andrew; and Rabinowitz, Paul, 4,302,305, Cl. 204-157.10H.
Mauldin, Charles H.; and Baird, William C., Jr., 4,302,359, Cl. 252-466.0PT.
McVicker, Gary B., 4,302,400, Cl. 260-429.00R.
Oswald, Alexis A., 4,302,401, Cl. 260-448.00C.
Eyres, James H.: *See*—
Shore, John W.; Eyres, James H.; and Critchley, Kenneth, 4,301,634, Cl. 52-389.000.
Fabris, Hubert J.: *See*—
Bingham, Robert E.; Durst, Richard R.; Fabris, Hubert J.; Hargis, Ivan G.; Livigni, Russell A.; and Aggarwal, Sundar L., 4,302,568, Cl. 526-187.000.
Fairchild Camera and Instrument Corp.: *See*—
Olla, Robert S., 4,302,717, Cl. 323-282.000.
Faith, Thomas J., Jr., to RCA Corporation. Laminated conducting film on an integrated circuit substrate and method of forming the laminate. 4,302,498, Cl. 428-209.000.
Falk, John C., to Borg-Warner Chemicals, Inc. Compatibilization of polystyrene and PVC. 4,302,555, Cl. 525-96.000.
Fang, Frank F.; and Yu, Hwa N., to International Business Machines Corporation. Nondestructive read-out dynamic memory cell. 4,302,764, Cl. 357-23.000.
Fankhanel, Martin O.; and Roosov, Alfred K., to M. W. Kellogg Company, The. Fuel conversion apparatus and method. 4,302,177, Cl. 431-11.000.
Fanshawe, William J.; McKenzie, Thomas C.; and Crawley, Lantz S., to American Cyanamid Company. Cis-mono and disubstituted-2-methyl-3-[(piperazinyl) and (piperidino)ethyl]indolines, intermediates for their preparation and methods of preparation. 4,302,589, Cl. 546-201.000.
Farid, Samir Y.: *See*—
Daly, Robert C.; Thompson, Danny R.; and Farid, Samir Y., 4,302,527, Cl. 430-270.000.
Farmitalia Carlo Erba S.p.A.: *See*—
Cozzi, Paolo; Menchetti, Piero; de Carneri, Ivo; and Trane, Franca, 4,302,472, Cl. 424-324.000.
Farr, Steve M., to Cooksey, James. Hole sealing water-tight plug. 4,301,629, Cl. 52-99.000.
Fattore, Vittorio: *See*—
Manara, Giovanni; Fattore, Vittorio; and Notari, Bruno, 4,302,597, Cl. 564-127.000.

Ferrari, Giorgio: *See—*
Casagrande, Cesare; and Ferrari, Giorgio, 4,302,471, Cl. 424-311.000.
Fetterman, Harold R.: *See—*
Chiao, Raymond Y.; Fetterman, Harold R.; and Schlossberg, Howard R., 4,302,667, Cl. 250-205.000.
Fier, Raymond L. Manhole cover support ring. 4,302,126, Cl. 404-26.000.
Findeisen, Kurt; and Linker, Karl-Heinz, to Bayer Aktiengesellschaft. Process for the preparation of acyl cyanides. 4,302,583, Cl. 544-176.000.
Fineberg, Herman: *See—*
Frainier, Leo J.; and Fineberg, Herman, 4,302,397, Cl. 260-347.800.
Finlayson, James W.; Reyes, Renato D.; Eberle, Ralph F.; Wojcik, Thaddeus A.; Gumbert, James L.; McKeever, Robert B.; Nagy, Emery E.; and Houserman, Howard E., Jr., to Westinghouse Electric Corp. Probe positioner. 4,302,146, Cl. 414-744.00R.
Fintex, Inc.: *See—*
Grondin, Edward A.; Tulloch, Lawrence R.; Perkins, Martin P., Jr.; Krstovic, Alexander P.; McCoy, Bryon W.; and Morey, Kevin P., 4,301,602, Cl. 34-43.000.
Fio Rito, William M.; and Kidd, Ralph E., to Pan American Resources, Inc. Method for pyrolyzing waste materials. 4,301,750, Cl. 110-346.000.
Firestone, Allen R.: *See—*
Muhlemann, Hans R.; Firestone, Allen R.; and Imfeld, Thomas, 4,302,441, Cl. 424-48.000.
Firmenich SA: *See—*
Buchi, George H.; and Wuest, Hans, 4,302,607, Cl. 568-352.000.
Fischer, William, to Chem-Struct Corporation. Modular hydraulic mining tool with slurry inlet metering. 4,302,052, Cl. 299-67.000.
Fischer, Wolfgang; and Wissel, Brigitte, to Merck Patent Gesellschaft mit Beschrankter Haftung. Thin cover sheet for use in microscopic staining and a process for its production. 4,302,480, Cl. 427-2.000.
Fisher, Barry L.: *See—*
Jukkola, Walfred W.; Leon, Albert M.; Van Dyk, Garritt C., Jr.; McCoy, Daniel E.; Fisher, Barry L.; Saiers, Timothy L.; and Karstetter, Marlin E., 4,301,771, Cl. 122-4.00D.
Fisher, Frederick M., to Electric Power Research Institute. Measuring device for use with tubular products. 4,301,677, Cl. 73-105.000.
Fisher, Wayland I.: *See—*
Hamann, Michael L.; Guidinger, Nicholas C.; and Fisher, Wayland I., 4,302,478, Cl. 426-517.000.
Fiske, Augustus H., Jr., to Bolt Associates, Inc. Acceleration-responsive apparatus for sensing firing instant of an air gun. 4,301,887, Cl. 181-107.000.
Fitch, Theodore A., to Bell Telephone Laboratories, Incorporated. Analog signal level monitor. 4,302,812, Cl. 364-483.000.
Fitzgerald, John E., to Zeto Industries, Inc. Air shooting system for the mining of coal or the like. 4,301,731, Cl. 102-330.000.
Fitzgerald, Timothy P.; Novak, Lubomir; and Engman, Larry O., to Image Systems, Inc. Multiple-carousel microfiche storage and retrieval system. 4,301,929, Cl. 209-608.000.
Flatau, Abraham; and Huerta, Joseph, to United States of America, Army. Supersonic, low drag tubular projectile. 4,301,736, Cl. 102-503.000.
Fleming, James W., Jr.; and Shiever, John W., to Bell Telephone Laboratories, Incorporated. Aluminum metaphosphate optical fibers. 4,302,074, Cl. 350-96.340.
Fleming, Joseph W. Crankshaft apparatus. 4,301,776, Cl. 123-197.0AC.
Fletcher, Ian J., to Ciba-Geigy Corporation. V-Triazolyl-[4,5-d]-pyrimidines. 4,302,586, Cl. 544-254.000.
Fletcher, Laird C.; and O'Blasny, Richard H., to Delta Central Refining, Inc. Solvent extraction process for rerefining used lubricating oil. 4,302,325, Cl. 208-180.000.
Fleury, Guy J.: *See—*
Nobileau, Philippe C.; Dermy, Rene M.; and Fleury, Guy J., 4,302,652, Cl. 219-72.000.
Flora, Richard D., to Shur Medical Corporation. Breathable surgical adhesive tape. 4,302,500, Cl. 428-284.000.
Flowcon Oy: *See—*
Niemi, Ossi, 4,302,110, Cl. 366-41.000.
Floyd, Herbert R. Two anti-theft locks. 4,301,669, Cl. 70-428.000.
FMC Corporation: *See—*
Friedman, Louis D., 4,302,218, Cl. 48-197.00R.
Gerow, Gordon P., 4,301,719, Cl. 99-510.000.
Konz, Marvin J., 4,302,238, Cl. 71-88.000.
Ford Motor Company: *See—*
Fox, David H.; and Kostan, Charles C., 4,302,638, Cl. 200-19.00R.
Frazee, William T., 4,301,692, Cl. 74-476.000.
Simko, Aladar O., 4,301,825, Cl. 137-111.000.
Smart, Charles A.; and Shackleton, Robert A., 4,301,775, Cl. 123-52.00M.
Forestal, Robert J. Nursing bottle device for nursing an infant. 4,301,934, Cl. 215-11.00D.
Forsythe, Calvin C.: *See—*
Wood, Loren E.; Allen, Jerome D.; Clift, Miner E.; Kays, Jerry W.; and Forsythe, Calvin C., 4,301,938, Cl. 220-89.00A.
Foshee, William R.: *See—*
Best, Walter E.; and Foshee, William R., 4,301,667, Cl. 70-380.000.
Fosroc International Limited: *See—*
Brown, John V., 4,302,131, Cl. 405-260.000.
Foster-Miller Associates, Inc.: *See—*
Harvey, Andrew C.; and McFadden, David H., 4,302,018, Cl. 277-27.000.
Fotiu, Eustace: *See—*
Socci, Robert; Gunderman, Anthony; Fotiu, Eustace; and Kabacoff, Bernard, 4,302,442, Cl. 424-61.000.
Foulkes, John D.; Worthington, David K.; and Trombly, John E., to Teltone Corporation. Digital data transmission system. 4,302,629, Cl. 179-2.0DP.
Fox, David H.; and Kostan, Charles C., to Ford Motor Company. Venting system for an internal combustion engine ignition distributor. 4,302,638, Cl. 200-19.00R.
Fox, Rita T.: *See—*
Hauck, Frederic P.; and Fox, Rita T., 4,302,453, Cl. 424-244.000.
Fraige, Richard. Waterbed mattress. 4,301,560, Cl. 5-450.000.
Frainier, Leo J.; and Fineberg, Herman, to Ashland Oil, Inc. Preparation of furfuryl alcohol from furfural. 4,302,397, Cl. 260-347.800.
Fralick, Stanley C.: *See—*
Widergren, Robert D.; Chen, Wen-Hsiung; Fralick, Stanley C.; and Tescher, Andrew G., 4,302,775, Cl. 358-136.000.
Framatome: *See—*
Gillot, Georges, 4,302,772, Cl. 358-100.000.
Leclercq, Joseph, 4,302,294, Cl. 376-446.000.
Franchino, Fulvio: *See—*
Maffeis, Flavio; and Franchino, Fulvio, 4,302,167, Cl. 425-28.00B.
Franco, Adolph S., III. Body transfer unit. 4,301,791, Cl. 128-89.00R.
Franek, Jozef T., to Metal Box Limited. Can opener. 4,301,595, Cl. 30-427.000.
Frank, Werner, to Licentia Patent-Verwaltungs-G.m.b.H. Apparatus for separating a letter stack. 4,302,000, Cl. 271-150.000.
Frankland, Roger A., to Beckman Instruments, Inc. Multiplexed display system. 4,302,756, Cl. 340-802.000.
Franse, Albert D.: *See—*
Watson, Frederick D.; Mayse, Weldon D.; and Franse, Albert D., 4,302,310, Cl. 204-186.000.
Franz Plasser Bahnbaumaschinen-Industriegesellschaft m.b.H.: *See—*
Theurer, Josef, 4,301,738, Cl. 104-2.000.
Fraser, James: *See—*
Davies, Roy V.; Fraser, James; Nichol, Kenneth J.; Parkinson, Raymond; Sim, Malcolm F.; and Yates, David B., 4,302,460, Cl. 424-258.000.
Fraser, William A.: *See—*
Karol, Frederick J.; Goeke, George L.; Wagner, Burkhard E.; Fraser, William A.; Jorgensen, Robert J.; and Friis, Nils, 4,302,566, Cl. 526-125.000.
Frau, Giuliano: *See—*
Rudolf, Guy; and Frau, Giuliano, 4,302,416, Cl. 264-244.000.
Frazee, William T., to Ford Motor Company. Gear selector having reverse inhibitor and backup light switch. 4,301,692, Cl. 74-476.000.
Fred Rice Productions, Inc.: *See—*
Rice, Frederick H., 4,301,787, Cl. 126-429.000.
Fredriksson, Lars O. A., to K A Bergs Smide AB. Chain sling tool. 4,301,589, Cl. 29-283.000.
Friedman, Henry L.: *See—*
Miller, Bernard; Friedman, Henry L.; and Meiser, Charles H., Jr., 4,302,222, Cl. 55-67.000.
Friedman, Louis D., to FMC Corporation. Process for controlling sulfur oxides in coal gasification. 4,302,218, Cl. 48-197.00R.
Friis, Nils: *See—*
Karol, Frederick J.; Goeke, George L.; Wagner, Burkhard E.; Fraser, William A.; Jorgensen, Robert J.; and Friis, Nils, 4,302,566, Cl. 526-125.000.
Frisch, Harry L.; Frisch, Kurt C.; and Klempner, Daniel, to Frisch, Harry L.; Frisch, Kurt C.; and Klempner, Daniel. Interpenetrating polymeric networks. 4,302,553, Cl. 525-28.000.
Frisch, Kurt C.: *See—*
Frisch, Harry L.; Frisch, Kurt C.; and Klempner, Daniel, 4,302,553, Cl. 525-28.000.
Fry, Harold E.; and Peters, Arnold L., to United States of America, Navy. Depth and hover control system for unmanned underwater vehicle. 4,301,761, Cl. 114-331.000.
Fuchs, Siegfried, to Winkler & Dunnebier Maschinenfabrik und Eisengiesserei GmbH & Co. KG. Rotary punch having a helically clamped abutment. 4,301,701, Cl. 83-349.000.
Fuji Electrochemical Co., Ltd.: *See—*
Torii, Michihiro; Goto, Hirohito; and Kihara, Utsuo, 4,302,279, Cl. 156-616.00R.
Fuji Photo Film Co., Ltd.: *See—*
Kato, Hisatoyo; Matsumoto, Seiji; and Miyahara, Junji, 4,302,671, Cl. 250-327.100.
Kato, Hisatoyo; Ishida, Masamitsu; and Matsumoto, Seiji, 4,302,672, Cl. 250-327.100.
Fujii, Kenzo: *See—*
Saitoh, Jun; Fujii, Kenzo; Nakagawa, Toshimi; Honda, Tadatoshi; Mitsuishi, Takatoshi; and Itoh, Hiroshi, 4,302,600, Cl. 564-206.000.
Fujishima, Satoru; and Nakamura, Takeshi, to Murata Manufacturing Co., Ltd. Composite piezoelectric tuning fork with eccentricly located electrodes. 4,302,694, Cl. 310-321.000.
Fujita, Mituo, to Kabushiki Kaisha Shinsei Industries. Manually-operated labeler. 4,301,729, Cl. 101-291.000.
Fujitsu Limited: *See—*
Hatakenaka, Tatsuo; Tamaki, Kiyouhei; and Nanbu, Tetsuo, 4,301,958, Cl. 228-4.500.
Nakayama, Takayuki; Inagaki, Nobuhiro; Ishihara, Michio; and Namazu, Ryosuke, 4,302,070, Cl. 350-96.190.

Tomita, Osamu, 4,302,117, Cl. 400-166.000.
Fujiwara, Shigeru; Nagahara, Masayosi; Nagai, Satoshi; and Isobe, Toshihiro, to Nippon Steel Corporation; and Harima Refractory Co. Ltd. Non-fired silicon carbide refractories. 4,302,372, Cl. 260-29.300.
Fujiwara, Tooru: *See—*
Kimura, Kazuo; Fujiwara, Tooru; and Harada, Norio, 4,302,197, Cl. 474-267.000.
Fukakusa, Shinji: *See—*
Wakayama, Naoaki; Tomoda, Toshimasa; and Fukakusa, Shinji, 4,302,696, Cl. 313-93.000.
Fukuda, Syozi; Munakata, Teruo; and Matsuki, Masashi, to Nissan Motor Co., Ltd. Antivibratioo device for a clutch pedal. 4,301,908, Cl. 192-109.00F.
Fukuhara, Toru, to Nippon Kogaku K.K. Reflecting mirror device in a single lens reflex camera. 4,302,089, Cl. 354-152.000.
Fukuma, Daizo; Okamoto, Hisao; Okamoto, Sumio; and Koreki, Takemasa, to Nissan Motor Company, Limited. Composite propellant with 0.2μ or smaller metal fuel. 4,302,258, Cl. 149-19.100.
Full, Gary G.; and Tedeschi, Rinaldo R., to United Technologies Corporation. Relative power contribution of an internal combustion engine. 4,301,678, Cl. 73-116.000.
Full, Gary G.; and Tedeschi, Rinaldo R., to United Technologies Corporation. Relative exhaust back-pressure of an internal combustion engine. 4,302,814, Cl. 364-551.000.
Full, Gary G.: *See—*
Tedeschi, Rinaldo R.; and Full, Gary G., 4,302,815, Cl. 364-551.000.
Fulwyler, Mack J.; and Hatcher, C. William, to Coulter Electronics, Inc. Droplet forming apparatus for use in producing uniform particles. 4,302,166, Cl. 425-6.000.
Funatsu, Akinobu; Oyama, Shuzoh; Akimoto, Yoshinori; and Ohashi, Komei, to Juridical Foundation, The Chemo-Sero-Therapeutic Research Institute. Purification of gammaglobulin derivative. 4,302,384, Cl. 260-112.00B.
Funfstuck, Horst. Rotatable closure for collapsible tubes. 4,301,930, Cl. 222-548.000.
Furusato, Akaru: *See—*
Hayakawa, Noboru; Furusato, Akaru; Saito, Toshio; and Iwai, Tastuyuki, 4,302,332, Cl. 210-369.000.
Furuta, Akihiro: *See—*
Sano, Takezo; Inoue, Haruo; and Furuta, Akthiro, 4,302,528, Cl. 430-273.000.
Futatsumori, Koji: *See—*
Arai, Masatoshi; and Futatsumori, Koji, 4,302,571, Cl. 528-32.000.
G.M.G. System S.p.A.: *See—*
Mola, Giuseppe, 4,301,769, Cl. 119-82.000.
GAF Corporation: *See—*
Barabas, Eugene S.; Mallya, Prakish; and Gromelski, Stanley J., 4,302,606, Cl. 568-333.000.
Mandella, William L.; and Kuszewski, James R., 4,302,524, Cl. 430-155.000.
Gallagher, Harry G.: *See—*
Mueller, Helmut C.; and Gallagher, Harry G., 4,301,577, Cl. 26-2.00R.
Gallagher, P. Christopher J.: *See—*
Astle, Brian; and Gallagher, P. Christopher J., 4,302,016, Cl. 273-278.000.
Gamel, Ronald R. Apparatus and process for flue gas desulphurization. 4,302,425, Cl. 422-161.000.
Gant, Leroy A. Turn signal and hazard signal control circuit. 4,302,748, Cl. 340-67.000.
Garber, Michael B.: *See—*
Cox, John T.; Garber, Michael B.; Jasper, Marilyn A.; and Longshore, Randolph E., 4,302,531, Cl. 430-317.000.
Garcea, Gian P.: *See—*
Cocchiara, Franco; Camarsa, Mario; and Garcea, Gian P., 4,301,651, Cl. 60-282.000.
Gardner, Jerry A.: *See—*
Gatsos, Stephen L.; and Gardner, Jerry A., 4,301,902, Cl. 192-11.000.
Gargini, Eric J., to Communications Patents Limited. Wire broadcasting system with subscriber controlled switched program selection. 4,302,771, Cl. 358-86.000.
Garner, Robert; and Petitpierre, Jean C., to Ciba-Geigy Corporation. Fluoran compounds. 4,302,393, Cl. 260-335.000.
Garnett, John L.; and Rock, John D. Method of making polymeric photoconductive material involves partial polymerization step. 4,302,522, Cl. 430-133.000.
Garrett Corporation, The: *See—*
Burgmeier, Lyman R.; McCarty, Frederick B.; and Silver, Alexander, 4,302,693, Cl. 310-156.000.
Wieland, Kurt H., 4,302,130, Cl. 415-207.000.
Garvin, John P.: *See—*
Baker, Albert F.; Blaustein, Eric W.; Deurbrouck, Albert W.; Garvin, John P.; and McKeever, Robert E., 4,302,209, Cl. 44-10.00D.
Gates, Donald C.; and Tonsfeldt, Wayne S. Defoliator. 4,301,646, Cl. 56-121.430.
Gatsos, Stephen L.; and Gardner, Jerry A., to Indus Wheel Company Div. of Carlisle Corporation. Combination vehicle speed and direction control. 4,301,902, Cl. 192-11.000.
Gaugel, Manfred: *See—*
Kiesel, Rolf; and Gaugel, Manfred, 4,302,698, Cl. 313-222.000.
Gebr. Bode & Co.: *See—*
Houweling, Hans-Hermann, 4,301,621, Cl. 49-27.000.
Gebruder Pletscher: *See—*
Pletscher, Oskar, 4,301,951, Cl. 224-32.00R.
Geenberghe, J. Van. Sofa bed mechanism. 4,301,559, Cl. 5-13.000.
Geiger, Rolf: *See—*
Bickel, Martin; Geiger, Rolf; Leeb, Richard; and Petri, Walter, 4,302,448, Cl. 424-177.000.
Gema AG: *See—*
Ribnitz, Peter; Giesinger, Hans; and Buschor, Karl, 4,302,481, Cl. 427-27.000.
General Atomic Company: *See—*
Ohkawa, Tihiro, 4,302,284, Cl. 376-133.000.
General Corporation, The: *See—*
Hoshino, Akitika, 4,301,663, Cl. 62-453.000.
General Dynamics Corporation: *See—*
Bradfield, Ganey W.; and Cragin, Glynn P., Jr., 4,301,980, Cl. 244-12.500.
General Dynamics, Pomona Division: *See—*
Palmer, John P.; and Ward, Phillip B., Jr., 4,302,267, Cl. 156-158.000.
General Electric: *See—*
Kirkpatrick, Robert G., 4,301,710, Cl. 89-12.000.
General Electric Company: *See—*
Allen, Malcolm H., Jr., 4,301,686, Cl. 73-861.350.
Baertsch, Richard D.; and Engeler, William E., 4,302,686, Cl. 307-221.00D.
Blevins, Theodore J., 4,301,666, Cl. 68-23.700.
Boyles, Robert L.; and Polonsky, Samuel, 4,302,695, Cl. 310-324.000.
Cutler, John H.; and Walker, Loren H., 4,302,713, Cl. 318-801.000.
Kandler, James J.; Basler, Peter H.; and Schwehr, Gregory D., 4,302,647, Cl. 200-159.00B.
Latos, Edward L.; and Moneymaker, Elton G., 4,301,924, Cl. 206-520.000.
Lewis, Merle J.; and Marruffo, Benito F., 4,302,639, Cl. 200-38.00R.
McElhenny, Stuart W., 4,302,811, Cl. 364-426.000.
McSparran, Lloyd W.; Ryan, Paul T.; and Smith, Russell M., 4,301,899, Cl. 191-3.000.
Miller, Edward H., 4,302,227, Cl. 55-269.000.
Powers, Robert W.; and Mitoff, Stephan P., 4,302,519, Cl. 429-193.000.
Rowe, Richard A., 4,301,829, Cl. 137-387.000.
Takekoshi, Tohru, 4,302,575, Cl. 528-185.000.
Williams, Frank J., III; and Dellacoletta, Brent A., 4,302,616, Cl. 568-722.000.
Youngborg, Lamont H., 4,302,288, Cl. 376-210.000.
General Electric Company Limited, The: *See—*
Shobbrook, David E., 4,302,726, Cl. 330-260.000.
General Hardware Manufacturing Company: *See—*
Charnley, Peter W., 4,301,600, Cl. 33-464.000.
General Motors Corporation: *See—*
Cherubim, Justin L., 4,302,147, Cl. 415-92.000.
Grundman, Richard G.; and Knape, Richard S., 4,301,777, Cl. 123-379.000.
LaFlame, Frank E., 4,302,156, Cl. 416-169.00A.
Payne, James R., 4,301,824, Cl. 137-110.000.
Smale, Charles H., 4,302,149, Cl. 415-134.000.
Stettler, Richard J., 4,301,656, Cl. 60-737.000.
Walker, Frank H., 4,301,649, Cl. 60-39.070.
General Tire & Rubber Co., The: *See—*
Bingham, Robert E.; Durst, Richard R.; Fabris, Hubert J.; Hargis, Ivan G.; Livigni, Russell A.; and Aggarwal, Sundar L., 4,302,568, Cl. 526-187.000.
Devitt, James J., 4,302,264, Cl. 156-110.00A.
Georg Spiess GmbH: *See—*
Liepert, Rudolf, 4,302,001, Cl. 271-183.000.
Geosource Inc.: *See—*
Andry, Louis L.; and Hoover, Michael C., 4,302,769, Cl. 358-55.000.
Gerlach, Pierre: *See—*
Benoit, Michel; and Gerlach, Pierre, 4,302,705, Cl. 315-39.000.
Gernez, Alain: *See—*
Campion, Michel; and Gernez, Alain, 4,301,764, Cl. 118-634.000.
Gerow, Gordon P., to FMC Corporation. Separating citrus peel into albedo and flavedo components. 4,301,719, Cl. 99-510.000.
Gersbach, John E.; Kim, Ick W.; and Zehle, Adolf M., to International Business Machines Corp. Differential charge sensing system. 4,302,823, Cl. 365-190.000.
Gewerkschaft Eisenhutte Westfalia: *See—*
Weirich, Walter; and Hennlich, Gunther, 4,302,034, Cl. 285-26.000.
Gewirtz, Stanley J. Programmable computing enlarging exposure meter. 4,302,099, Cl. 355-68.000.
GHT, Gesellschaft fur Hochtemperatur-Technik mbH: *See—*
von Waclawiczek, Herbert; and Jager, Walter, 4,302,292, Cl. 376-325.000.
Gianzero, Stanley, to Schlumberger Technology Corporation. Induction logging otilizing resistive and reactive induced signal components to determine conductivity and coefficient of anisotropy. 4,302,722, Cl. 324-339.000.
Gibson, James B.; Boomer, Daryl R.; and Schoellhorn, Henry, III, to Chevron Research Company. Bi-directional impulse shear wave generator and method of use. 4,301,888, Cl. 181-114.000.
Giede, Wolfgang; Koch, Karlheinz; Kolaczinski, Gerhard; Rupilius, Wolfgang; and Stein, Werner, to Henkel Kommanditgesellachaft auf Aktien; and Deutsche Gold- und Silber-Scheideanstalt. Mixtures of

vicinal aminoalkanols, process of preparation, and their applicatioo as corrosion inhibitors. 4,302,354, Cl. 252-392.000.
Giesinger, Hans: *See—*
Ribnitz, Peter; Giesinger, Hans; and Buschor, Karl, 4,302,481, Cl. 427-27.000.
Gilbert, Earl F.: *See—*
Alexander, Richard G.; Gilbert, Earl F.; and Kelly, Frederic J.; 4,301,960, Cl. 229-30.000.
Gilbert, Robert W.: *See—*
Gokcen, Cem M.; and Gilbert, Robert W., 4,301,935, Cl. 215-100.00A.
Giles, Ralph R.; and Weaver, Max A., to Eastman Kodak Company. Azo dyes from 1,3,4-thiadiazol-2-yl and 1,2,4-thiadiazol-5-yl moieties bearing sulfated hydroxyalkoxycarbonyl or N-(hydroxyalkyl)carbamoyl groups on their rings. 4,302,387, Cl. 260-155.000.
Giles, Ralph R.; and Weaver, Max A., to Eastman Kodak Company. Azo dyes with sulfate groups on the diazotized 2-amino thiazol and 5-amino isothiazol moiety and with aniline, tetrahydroquinoline and benzomorpholine couplers. 4,302,390, Cl. 260-158.000.
Gillings, Barrie R. D., to University of Sydney. Denture retention. 4,302,189, Cl. 433-189.000.
Gillot, Georges, to Framatome. Device for the televisual inspection of the inner surface of a closed cylindrical vessel. 4,302,772, Cl. 358-100.000.
Ginsburgh, Irwin: *See—*
Sirovich, Bruce E.; and Ginsburgh, Irwin, 4,302,436, Cl. 423-644.000.
Girling Limited: *See—*
Harrison, Anthony W.; and Bayliss, John P., 4,301,895, Cl. 188-59.000.
Gitkin International: *See—*
Gitkin, Merrill J., 4,301,851, Cl. 160-46.000.
Gitkin, Merrill J., to Gitkin International. Combined movable shutter and awning. 4,301,851, Cl. 160-46.000.
Glavitsch, Hans; and Guth, Gerhard, to BBC Brown, Boveri & Company Limited. Controllable phase shifter. 4,302,716, Cl. 323-217.000.
Goeke, George L.; Wagner, Burkhard E.; and Karol, Frederick J., to Union Carbide Corporation. Impregnated polymerization catalyst, process for preparing, and use for ethylene copolymerization. 4,302,565, Cl. 526-88.000.
Goeke, George L.: *See—*
Karol, Frederick J.; Goeke, George L.; Wagner, Burkhard E.; Fraser, William A.; Jorgensen, Robert J.; and Friis, Nils, 4,302,566, Cl. 526-125.000.
Gogins, Laird B. Free wing turbine. 4,302,684, Cl. 290-55.000.
Gokan, Hiroshi: *See—*
Esho, Sotaro; and Gokan, Hiroshi, 4,302,822, Cl. 365-8.000.
Gokcen, Cem M.; and Gilbert, Robert W., to Baxter Travenol Laboratories, Inc. Container with hanger. 4,301,935, Cl. 215-100.00A.
Gokcen, Nev A., to United States of America, Interior. Method for measuring the ionic activities in water with a differential pressure transducers. 4,301,676, Cl. 73-64.200.
Goldberg, Ronald A. Packaging clip. 4,301,575, Cl. 24-1.000.
Goldin, Gerald; and Brooks, William I., Jr., to Goldin, Gerald. Apparatus for placing a device to be energized in a circuit including a battery without need for wiring. 4,301,946, Cl. 222-113.000.
Goldstone, Edward G.; and Peal, Clayton E., to Dayco Corporation. Powder dispensing apparatus. 4,301,763, Cl. 118-308.000.
Goletto, Jean: *See—*
Cerutti, Claude; Goletto, Jean; Habault, Robert; and Vaginay, Yves, 4,302,507, Cl. 428-373.000.
Golimowski, Jerzy; Sipos, Laszlo; and Valenta, Paul, to Kernforschungsanlage Julich Gesellschaft mit beschrankter Haftung. Voltammetric cell, measuring electrode and method. 4,302,314, Cl. 204-195.00R.
Gollinger, Wolfgang; Grosse, Joachim; and Uhlenhoff, Arnold, to ITT Industries, Inc. CMOS Circuit for converting a ternary signal into two binary signals, and use of this CMOS circuit. 4,302,690, Cl. 307-451.000.
Goodenongh, John B.; and Mizuchima, Koichi. Electrochemical cell with new fast ion conductors. 4,302,518, Cl. 429-104.000.
Gopichand, Yalamanchili: *See—*
Schmitz, Francis J.; van der Helm, Dick; Hossain, M. Bilayet; Gopichand, Yalamanchili; and Prasad, Ravi S., 4,302,470, Cl. 424-283.000.
Gordon, Eugene I., to Bell Telephone Laboratories, Incorporated. Video storage system. 4,302,703, Cl. 315-13.0ST.
Gordon, William F. Tube expander. 4,302,176, Cl. 425-392.000.
Goron, John, to Midland-Ross Corporation. Accumulator head having a piston with a self-wiping face. 4,302,170, Cl. 425-133.100.
Gosser, Lawrence W., to Du Pont de Nemours, E. I., and Company. Hydrogenation of a diarylketone to a diarylmethanol. 4,302,435, Cl. 423-591.000.
Gosset, Pierrette; and Lodewick, Rainer, to Procter & Gamble Company, The. Liquid detergent compositions comprising anionic, nonionic and cationic surfactants. 4,302,364, Cl. 252-545.000.
Goto, Hirohito: *See—*
Torii, Michihiro; Goto, Hirohito; and Kihara, Utsuo, 4,302,279, Cl. 156-616.00R.
Gotsmann, Ulrich: *See—*
Nagl, Gert; Ribka, Joachim; Gotsmann, Ulrich; and Dickmanns, Heinz, 4,302,582, Cl. 544-37.000.
Gottschalk, Stephen C.: *See—*
Wake, Robert H.; Gottschalk, Stephen C.; and Smith, Kendall A., 4,302,675, Cl. 250-363.00S.
Gould, Terence. Capodastros. 4,301,705, Cl. 84-318.000.
Gouttebessis, Jacques: *See—*
Schneider, Andre; Cesar, Jean-Pierre; and Gouttebessis, Jacques, 4,301,850, Cl. 152-361.00R.
Gowdy, Hugh W.: *See—*
Simpson, Howard D.; Gowdy, Hugh W.; and Light, Steven D., 4,302,219, Cl. 48-213.000.
Goymour, Philip C. Seismic survey apparatus. 4,302,824, Cl. 367-19.000.
Graciotti, Alessandro: *See—*
Pisani, Federico; and Graciotti, Alessandro, 4,302,755, Cl. 340-734.000.
Granatek, Alphonse P.: *See—*
Kaplan, Murray A.; and Granatek, Alphonse P., 4,302,446, Cl. 424-131.000.
Graphic Scanning, Inc.: *See—*
Vicari, Ronald P.; and Yampol, Barry, 4,302,632, Cl. 179-27.0FH.
Gras, Rainer; and Wolf, Elmar, to Chemische Werke Huls Aktiengesellschaft. Compounds containing isocyanuric groups and terminally blocked isocyanate groups. 4,302,351, Cl. 252-182.000.
Greene & Kellogg, Inc.: *See—*
McCombs, Norman R.; and Schlaechter, John, 4,302,224, Cl. 55-160.000.
Greenwald, Richard B.: *See—*
Evans, David H.; and Greenwald, Richard B., 4,302,612, Cl. 568-604.000.
Greenwald, Rogers J.; and Matteson, Lawrence J., to Eastman Kodak Company. Automatic rangefinding device for use in a camera. 4,302,084, Cl. 354-25.000.
Grefco, Inc.: *See—*
Ruff, David L.; and Nath, N. Gokul, 4,302,344, Cl. 252-62.000.
Greve, Heinz: *See—*
Wahle, Gunter; Greve, Heinz; and Berlin, Herbert, 4,301,816, Cl. 131-88.000.
Greven, Richard, to Unicel Corporation. Cutting apparatus. 4,301,700, Cl. 83-91.000.
Griffin, Hugh A. Vehicle drive system. 4,301,881, Cl. 180-6.480.
Grimes, Richard V.; Harlamert, W. Benjamin; and Thompson, David F., to Hartzell Propeller, Inc. Air craft propeller assembly with composite blades. 4,302,155, Cl. 416-144.000.
Grimminger, Albert; and Wiedmann, Werner, to Werner & Pfleiderer. Device for filling a container which is under pressure. 4,302,143, Cl. 414-173.000.
Grine, Wayne R.: *See—*
Scarzello, John F.; Lenko, Daniel S.; Krall, Albert D.; Grine, Wayne R.; Brown, Robert E.; Usher, George W.; Mills, Milton K.; and Syeles, Albert M., 4,302,746, Cl. 340-38.00L.
Grisch, William E., to Armco Inc. Moldable composite. 4,302,499, Cl. 428-236.000.
Gromelski, Stanley J.: *See—*
Barabas, Eugene S.; Mallya, Prakish; and Gromelski, Stanley J., 4,302,606, Cl. 568-333.000.
Grondin, Edward A.; Tulloch, Lawrence R.; Perkins, Martin P., Jr.; Krstovic, Alexander P.; McCoy, Bryon W.; and Morey, Kevin P., to Fintex, Inc. Apparatus for treating a moving web. 4,301,602, Cl. 34-43.000.
Groot, Robert C.: *See—*
Helle, Kees; and Groot, Robert C., 4,302,374, Cl. 260-29.60F.
Gross, Benjamin; and Voltz, Sterling E., to Mobil Oil Corporation. Control of CO emissions in a process for producing gasoline from methanol. 4,302,619, Cl. 585-408.000.
Grosse, Joachim: *See—*
Gollinger, Wolfgang; Grosse, Joachim; and Uhlenhoff, Arnold, 4,302,690, Cl. 307-451.000.
Grossmann, Gunter: *See—*
Wilks, Gerhard; Grossmann, Gunter; and Sanz, Franz, 4,302,124, Cl. 403-391.000.
Grover, Donald D.; and Neumann, Norbert C., to Snap-on Tools Corporation. Pickup probe for engine timing. 4,302,724, Cl. 324-402.000.
Grtischke, Martin: *See—*
Pfohl, Rainer; Grtischke, Martin; and Schubert, Jurgen, 4,302,338, Cl. 210-752.000.
Grunder, Robert A.: *See—*
Demas, Nickolas P.; Bair, James E.; and Grunder, Robert A., 4,302,697, Cl. 313-113.000.
Grundman, Richard G.; and Knape, Richard S., to General Motors Corporation. Fuel injection pump. 4,301,777, Cl. 123-379.000.
Grunert, Kurt A.; Henwood, John J.; and DeVault, Birch L., to Westinghouse Electric Corp. Circuit interrupter with optical indicator. 4,302,650, Cl. 200-308.000.
GTE Products Corporation: *See—*
Audesse, Emery G.; and Hartman, Donald W., 4,302,794, Cl. 362-15.000.
Keeffe, William M.; and Rothwell, Harold L., Jr., 4,302,699, Cl. 313-229.000.
Shaffer, John W., 4,302,182, Cl. 431-362.000.
Gubser, Hans-Rudolf; and Kehlhofer, Rolf, to BBC Brown, Boveri & Co. Ltd. Pressure regulating apparatus for a closed water circuit. 4,301,650, Cl. 60-39.18B.
Gucwa, Paul R.: *See—*
Sydansk, Robert D.; Gucwa, Paul R.; and Stonecipher, Sharon A., 4,301,867, Cl. 166-292.000.
Gudgel, Terry J. Illuminated frisbee toy. 4,301,616, Cl. 46-228.000.
Guffey, Larry J.; and Schultz, William W., to Owens-Corning Fiberglass Corporation. Method and apparatus for forming mineral fibers. 4,302,234, Cl. 65-14.000.

Guidinger, Nicholas C.: *See—*
Hamann, Michael L.; Guidinger, Nicholas C.; and Fisher, Wayland I., 4,302,478, Cl. 426-517.000.
Guillaume, Robert; Pleska, Jean-Pierre; and Indeherbergh, Jean, to Solvay and Cie. Permeable diaphragm for an electrochemical cell. 4,302,303, Cl. 204-128.000.
Guillemot, Philippe, to Mecilec. Digital pressure-measuring device. 4,301,685, Cl. 73-723.000.
Guinn, Ronald K.: *See—*
Voth, Harold W.; King, John T.; and Guinn, Ronald K., 4,301,647, Cl. 56-504.000.
Gulf Research & Development Company: *See—*
Schulz, J. Gustav; and Bunting, Pamela M., 4,302,539, Cl. 435-68.000.
Gumbert, James L.: *See—*
Finlayson, James W.; Reyes, Renato D.; Eberle, Ralph F.; Wojcik, Thaddeus A.; Gumbert, James L.; McKeever, Robert B.; Nagy, Emery E.; and Houserman, Howard E., Jr., 4,302,146, Cl. 414-744.00R.
Gunderman, Anthony: *See—*
Socci, Robert; Gunderman, Anthony; Fotiu, Eustace; and Kabacoff, Bernard, 4,302,442, Cl. 424-61.000.
Gundermann, Karl-Dietrich; Wulff, Karl; Staehler, Fritz; and Linke, Hans-Ralf, to Boehringer Mannheim GmbH. Reagent and method for the determination of peroxidase. 4,302,537, Cl. 435-7.000.
Gundlach, Robert W.; and Bergen, Richard F., to Xerox Corporation. Development method and apparatus. 4,302,094, Cl. 355-3.0DD.
Gunning, William F.; and Lavalle, Pierre A., to Xerox Corporation. Reproduction scanning system having intermediate storage between input and output scanning stations. 4,302,782, Cl. 358-296.000.
Gunter & Cooke, Inc.: *See—*
Gunter, Josef K.; O'Neal, James E.; and Jones, Thomas R., 4,301,573, Cl. 19-200.000.
Gunter, Josef K.; O'Neal, James E.; and Jones, Thomas R., to Gunter & Cooke, Inc. Fiber processing apparatus and method. 4,301,573, Cl. 19-200.000.
Gunther, Rainer: *See—*
Bol, Johannes; Classen, Meinhard; Gunther, Rainer; Hugemann, Bernhard; and Scheiding, Uwe, 4,301,790, Cl. 128-6.000.
Gurak, Nur; and Tebbens, Klaas, to Polysar Limited. Latex coagulation. 4,302,377, Cl. 260-29.7PT.
Gustavson, Robert G.; and Cummings, Darold B., to United States of America, Air Force. Low drag integration of laser beam pointing device into aircraft. 4,302,796, Cl. 362-62.000.
Guterman, Daniel C.; and Chiu, Te-Long, to Texas Instruments Incorporated. Self-limiting erasable memory cell with triple level polysilicon. 4,302,766, Cl. 357-41.000.
Guth, Gerhard: *See—*
Glavitsch, Hans; and Guth, Gerhard, 4,302,716, Cl. 323-217.000.
Gutierrez, Antonio: *See—*
Brois, Stanley J.; and Gutierrez, Antonio, 4,302,395, Cl. 260-343.600.
Gyma, Dennis W.: *See—*
Hyde, John W.; and Gyma, Dennis W., 4,302,802, Cl. 363-21.000.
H. W. Hart Mfg. Co.: *See—*
Osborn, Denis L., 4,301,768, Cl. 119-51.00R.
Haas, Richard G., to Brown Company. Container closing means and process. 4,301,640, Cl. 53-478.000.
Habault, Robert: *See—*
Cerutti, Claude; Goletto, Jean; Habault, Robert; and Vaginay, Yves, 4,302,507, Cl. 428-373.000.
Habermas, Robert E., to Detroit Edison Company, The. Reconditioning of phosphate ester hydraulic control fluids. 4,302,335, Cl. 210-651.000.
Habiger, Cyril W., to Caterpillar Tractor Co. Speed control and transmission vent valve. 4,301,835, Cl. 137-596.000.
Hagarty, John D., to S. C. Johnson & Son, Inc. Synthesis of 2-alkoxyphenols. 4,302,615, Cl. 568-652.000.
Haigh, Daniel H.: *See—*
Larson, Edwin G.; Haigh, Daniel H.; and Hall, Richard H., 4,302,337, Cl. 210-662.000.
Haines, William H.; and Cooper, Leon C. Smoke detector tester. 4,301,674, Cl. 73-1.00G.
Hajime Industries Ltd.: *See—*
Yoshida, Hajime, 4,302,773, Cl. 358-106.000.
Halbach & Braun: *See—*
Braun, Ernst; and Braun, Gert, 4,301,913, Cl. 198-735.000.
Halbritter, Klaus, to BASF Aktiengesellschaft. Preparation of 3,3-dimethyl-pent-4-enoic acid amides. 4,302,584, Cl. 544-176.000.
Halcon Research & Development Corp.: *See—*
Porcelli, Richard V., 4,302,611, Cl. 568-484.000.
Hall, Arthur L. Liquid control system. 4,302,185, Cl. 433-27.000.
Hall, Richard H.: *See—*
Larson, Edwin G.; Haigh, Daniel H.; and Hall, Richard H., 4,302,337, Cl. 210-662.000.
Halle, Reidar; and Peterson, David, to Argus Chemical Corporation. 2-Chloro-2-alkyl substituted peroxyesters. 4,302,569, Cl. 526-231.000.
Hallford, Ben R., to Rockwell International Corporation. Balun filter apparatus. 4,302,739, Cl. 333-204.000.
Halliburton Company: *See—*
Watson, Jimmie L., 4,302,341, Cl. 252-8.55R.
Hallqvist, Ellert, to MT Machine Company AB. Work changing mechanism for machine tools. 4,302,144, Cl. 414-590.000.
Halmann, Mirjam; Velan, Baruch; and Seri, Tamar, to Israel Institute for Biological Research. Chemiluminescent enzyme immunoassay. 4,302,534, Cl. 435-6.000.
Hamann, Michael L.; Guidinger, Nicholas C.; and Fisher, Wayland I., to J. R. Simplot Company. Method of shaping potato dough. 4,302,478, Cl. 426-517.000.
Hamaoka, Takashi; Tanaka, Shunpei; Musha, Toru; and Oinoue, Kenichi, to Olympus Optical Company Ltd. Optical information reading-out apparatus. 4,302,830, Cl. 369-45.000.
Hamburger, Manny C. Combined pattern bolder and pattern position indicator. 4,302,192, Cl. 434-95.000.
Hamelin, Benoit; and Constant, Brigitte, to Brasseries Kronenbourg. Package with surrounding binder. 4,301,922, Cl. 206-428.000.
Hamilton, Herbert M. Bowling overshoe. 4,301,604, Cl. 36-130.000.
Hamilton, Joel A. Apparatus and method for producing a container for food and the like. 4,301,639, Cl. 53-456.000.
Hammann, Ingeborg: *See—*
Heywang, Gerhard; Hartmann, Alfons; Hammann, Ingeborg; and Homeyer, Bernhard, 4,302,466, Cl. 424-267.000.
Handa, Hajime; Yonekawa, Yasuhiro; Yamagata, Sen; Taki, Waro; Ikada, Yoshito; and Iwata, Hiroo, to Kuraray Co., Ltd. Balloon catheter. 4,301,803, Cl. 128-349.00B.
Handelman, Susan. Carrying case for contraceptive devices. 4,301,916, Cl. 206-38.000.
Hanke, Kenneth E.: *See—*
Osborne, Anthony; and Hanke, Kenneth E., 4,302,646, Cl. 200-153.0SC.
Hara, Shigeyoshi: *See—*
Kawaguchi, Takeyuki; Taketani, Yutaka; Sasaki, Noriaki; Minematsu, Hiroyoshi; Hayashi, Yuzuru; and Hara, Shigeyoshi, 4,302,336, Cl. 210-654.000.
Harada, Norio: *See—*
Kimura, Kazuo; Fujiwara, Tooru; and Harada, Norio, 4,302,197, Cl. 474-267.000.
Harase, Jirou: *See—*
Matsumoto, Fumio; Harase, Jiron; Takashima, Kunihide; and Nakayama, Hisanobu, 4,302,257, Cl. 148-111.000.
Harase, Toshikatsu; Saito, Toshihisa; and Inoue, Nobuyoshi, to Copal Company Limited. Bound preventing device for focal plane shutters. 4,302,091, Cl. 354-246.000.
Harbian, Jivan. Climbing apparatus. 4,301,891, Cl. 182-135.000.
Harbs, Warren F., to Burroughs Corporation. Method of solvent coating with gravure roll in combination with sheathed elastomeric roll and apparatus. 4,302,486, Cl. 427-128.000.
Hargis, Ivan G.: *See—*
Bingham, Robert E.; Durst, Richard R.; Fabris, Hubert J.; Hargis, Ivan G.; Livigni, Russell A.; and Aggarwal, Sundar L., 4,302,568, Cl. 526-187.000.
Harima Refractory Co. Ltd.: *See—*
Fujiwara, Shigeru; Nagahara, Masayosi; Nagai, Satoshi; and Isobe, Toshihiro, 4,302,372, Cl. 260-29.300.
Harjung, Johann: *See—*
Escher, Gerd; Harjung, Johann; and Wenning, H. Peter, 4,302,353, Cl. 252-373.000.
Harlamert, W. Benjamin: *See—*
Grimes, Richard V.; Harlamert, W. Benjamin; and Thompson, David F., 4,302,155, Cl. 416-144.000.
Harley, David N.: *See—*
Clinch, Colin W. F.; and Harley, David N., 4,301,706, Cl. 411-57.000.
Harris, Hubert, to Peanut Research and Testing Laboratories, Inc. Method and apparatus for the continuous production of thermally processed food slurries. 4,302,111, Cl. 366-107.000.
Harrison, Anthony W.; and Bayliss, John P., to Girling Limited. Disc brakes for railway vehicles. 4,301,895, Cl. 188-59.000.
Harrison, Boyd L.; and Dolfini, Joseph E., to Richardson-Merrell Inc. 7-(1,3-Dithiolan-2-imino)cephalosporanic acid derivatives. 4,302,581, Cl. 544-27.000.
Harrison, Simon J.; and Pividor, Enea R., to Smith International, Inc. Non-rotating stabilizer for raise boring. 4,301,876, Cl. 175-53.000.
Hart, Henry. Anti-tamper fastening means. 4,302,137, Cl. 411-432.000.
Hart, Paul W., to Union Carbide Corporation. Novel solvents for the catalytic process for producing polyhydric alcohols. 4,302,547, Cl. 518-701.000.
Hartel, Guunter; and Schurfeld, Armin, to Bosch & Pierburg System oHG. Heating of combustible mixture generators for internal combustion engines. 4,302,407, Cl. 261-130.000.
Hartemann, Pierre; and Castera, Jean-Paul, to Thomson-CSF. Elastic surface wave accelerometer. 4,301,683, Cl. 73-517.00R.
Hartman, Donald W.: *See—*
Audesse, Emery G.; and Hartman, Donald W., 4,302,794, Cl. 362-15.000.
Hartmann, Alfons: *See—*
Heywang, Gerhard; Hartmann, Alfons; Hammann, Ingeborg; and Homeyer, Bernhard, 4,302,466, Cl. 424-267.000.
Hartmann, Heinrich: *See—*
Cordes, Claus; Hirsch, Guenter; and Hartmann, Heinrich, 4,302,367, Cl. 260-17.00R.
Hartmann, Kurt: *See—*
Bohg, Armin; and Hartmann, Kurt, 4,302,700, Cl. 313-292.000.
Hartt, Joseph. Aircraft with rotary wing. 4,301,981, Cl. 244-12.200.
Hartzell Propeller, Inc.: *See—*
Grimes, Richard V.; Harlamert, W. Benjamin; and Thompson, David F., 4,302,155, Cl. 416-144.000.
Haruta, Masatake; Sano, Hirosi; and Nakamura, Tomizo, to Agency of Industrial Science & Technology; and Ministry of International Trade & Industry. Catalyst for catalytic combustion of hydrogen. 4,302,360, Cl. 252-471.000.

Harvey, Andrew C.; and McFadden, David H., to Foster-Miller Associates, Inc. Packer arrangements for oil wells and the like. 4,302,018, Cl. 277-27.000.
Harwood, Leopold A., to RCA Corporation. Transistor protection circuit. 4,302,792, Cl. 361-92.000.
Hasegawa, Kiyoharu: *See*—
  Tsujimoto, Michihiro; Nishizawa, Tsutomu; Hasegawa, Kiyoharu; and Abe, Nobuyoshi, 4,302,396, Cl. 260-346.300.
Hasegawa, Masayasu; Nishikawa, Hideo; and Kotani, Yasuo, to Nippon Gohsei Kagaku Kogyo Kabushiki Kaisha. Antibacterial and antifungal composition. 4,302,467, Cl. 424-270.000.
Hasegawa, Tetsuo; Nagamatsu, Katsumi; and Nishikawa, Yoshihiro, to Canon Kabushiki Kaisha. Method for developing electrical latent images. 4,302,201, Cl. 8-444.000.
Hasegawa, Tsuguo: *See*—
  Nabeta, Takeshi; Masui, Takeshi; and Hasegawa, Tsuguo, 4,302,554, Cl. 525-71.000.
Hashimoto, Hideo, to Ricoh Company, Ltd. Sheet transportation belt apparatus. 4,302,002, Cl. 271-272.000.
Hashimoto, Shigeru, to Canon Kabushiki Kaisha. Optical element mounting device. 4,302,076, Cl. 350-252.000.
Hashimoto, Yukio: *See*—
  Hirata, Tadashi; Hashimoto, Yukio; Ogasa, Takehiro; Kobayashi, Shigeru; Sato, Akira; Sato, Kiyoshi; and Takasawa, Seigo, 4,302,540, Cl. 435-119.000.
  Hirata, Tadashi; Hashimoto, Yukio; Matsukuma, Ikuo; Yoshiie, Shigeo; and Takasawa, Seigo, 4,302,541, Cl. 435-119.000.
  Morokawa, Shigeru; Sekiya, Fukuo; Hashimoto, Yukio; Nomura, Yasushi; and Koga, Keiichiro, 4,302,828, Cl. 368-69.000.
  Morokawa, Shigeru; Sekiya, Fukuo; Hashimoto, Yukio; Nomura, Yasushi; and Koga, Keiichiro, 4,302,829, Cl. 368-82.000.
Haskell, Barin G.: *See*—
  Eng, Kai Y.; and Haskell, Barin G., 4,302,838, Cl. 370-100.000.
Haskew, Francis A.; Jones, Leslie A.; Morris, Alan R.; Tothfalusi, Miklos; and Plummer, Derek, to Coal Industry (Patents) Limited. Cutter unit assemblies for excavating machines and to excavating machines including cutter unit assemblies. 4,302,054, Cl. 299-31.000.
Hassall, Cedric H.; Broadhurst, Michael J.; and Thomas, Gareth J., to Hoffmann-La Roche Inc. Cyclic compounds. 4,302,398, Cl. 260-365.000.
Hastings, Dawson W.; and Wagner, Robert L., to Allis-Chalmers Corporation. Plow with correlated pull bar adjustment and support wheel steering. 4,301,872, Cl. 172-290.000.
Hata, Hideo: *See*—
  Yoshimura, Isao; Hata, Hideo; and Kaneko, Takashi, 4,302,557, Cl. 525-211.000.
Hatakenaka, Tatsuo; Tamaki, Kiyouhei; and Nanbu, Tetsuo, to Fujitsu Limited. Arrangement for automatically fabricating and bonding semiconductor devices. 4,301,958, Cl. 228-4.500.
Hatcher, C. William: *See*—
  Fulwyler, Mack J.; and Hatcher, C. William, 4,302,166, Cl. 425-6.000.
Hattori, Kenro; Ogawa, Takeshi; Ochiai, Minoru; Tomikawa, Takeshi; and Ikeda, Takeji, to Kohkoku Chemical Industry Co. Ltd. Process for producing a foam sheet having an embossed pattern. 4,302,489, Cl. 427-244.000.
Hattori, Shinichiro, to Olympus Optical Co., Ltd. Electric flash discharge device. 4,302,707, Cl. 315-241.00P.
Hauck, Frederic P.; and Fox, Rita T., to E. R. Squibb & Sons, Inc. Antiarrhythmic tetrahydronaphthalene derivatives. 4,302,453, Cl. 424-244.000.
Haugh, Charles E.: *See*—
  Maier, Alfred E.; Ricci, Louis N.; and Haugh, Charles E., 4,302,740, Cl. 335-21.000.
Hauni-Richmond, Inc.: *See*—
  Hinzmann, Alfred, 4,302,174, Cl. 425-341.000.
Hauni-Werke Korber & Co. KG: *See*—
  Wahle, Gunter; Greve, Heinz; and Berlin, Herbert, 4,301,816, Cl. 131-88.000.
Havel, Jiri; Schicketanz, Dieter; and Stut, Hans, to Siemens Aktiengesellschaft. Solid-state relay. 4,302,688, Cl. 307-252.00J.
Hawkeye of Iowa, Ltd.: *See*—
  Schmidgall, Hartzell H., 4,301,638, Cl. 52-687.000.
Hawkins, Geoffrey R.: *See*—
  Cannell, David W.; and Hawkins, Geoffrey R., 4,301,820, Cl. 132-7.000.
Hawkins, Patrick J., to Boeing Company, The. Position control system of the discontinuous feedback type. 4,302,666, Cl. 235-404.000.
Hayakawa, Noboru; Furusato, Akaru; Saito, Toshio; and Iwai, Tastuyuki, to Nishihara Environmental Sanitation Research Corp., Ltd. Centrifugal thickener. 4,302,332, Cl. 210-369.000.
Hayashi, Hiroshi, to Hitachi, Ltd. Nuclear reactor operation control process. 4,302,287, Cl. 376-217.000.
Hayashi, Hisao: *See*—
  Ohuchi, Norikazu; Yamoto, Hisayoshi; Hayashi, Hisao; and Matsushita, Takeshi, 4,302,763, Cl. 357-16.000.
Hayashi, Nobuyuki: *See*—
  Tachiki, Shigeo; Ishimaru, Toshiaki; and Hayashi, Nobuyuki, 4,302,268, Cl. 156-238.000.
Hayashi, Yuzuru: *See*—
  Kawaguchi, Takeyuki; Taketani, Yutaka; Sasaki, Noriaki; Minematsu, Hiroyoshi; Hayashi, Yuzuru; and Hara, Shigeyoshi, 4,302,336, Cl. 210-654.000.
Hayden, David W. Pressurized fluid motor. 4,301,654, Cl. 60-649.000.
Haynes, Leonard S. Reading tutor timer. 4,302,193, Cl. 434-178.000.
Hazel Grove Music Company Ltd.: *See*—
  Dale, John G., 4,301,745, Cl. 108-144.000.
Hebbeker, Heinz: *See*—
  Kausche, Helmold; and Hebbeker, Heinz, 4,302,737, Cl. 333-172.000.
Hebenstreit, Ernst, to Siemens Aktiengesellschaft. Linear output stage for charge-coupled circuits. 4,302,685, Cl. 307-221.00D.
Heberger, John M., to American Hoechst Corp. Dual layered antistatic coated polyester film. 4,302,505, Cl. 428-341.000.
Heberger, John M., to American Hoechst Corporation. Slip coated polyester film. 4,302,506, Cl. 428-341.000.
Heck, Klaus, to Audi NSU Auto Union Aktiengesellschaft. Process for applying metallic sprayed coats to the inner surface of a hollow body. 4,302,482, Cl. 427-34.000.
Heckman, Russell W.: *See*—
  Burmeister, Robert J.; Heckman, Russell W.; Miller, Robert C.; and Nickey, George A., 4,302,275, Cl. 156-446.000.
Hector, Roy W.: *See*—
  Swanson, Charles E.; and Hector, Roy W., 4,302,660, Cl. 219-391.000.
Heggs, Thomas G.: *See*—
  Lansbury, Robert C.; and Heggs, Thomas G., 4,302,504, Cl. 428-332.000.
Heilmeier & Weinlein Fabrik fur Oel-Hydraulik GmbH & Co., KG: *See*—
  Brunner, Rudolf, 4,301,837, Cl. 137-625.680.
Heimbigner, Gary L., to Rockwell International Corporation. Geometry for fabricating enhancement and depletion-type, pull-up field effect transistor devices. 4,302,765, Cl. 357-23.000.
Hein, Wolfgang: *See*—
  Cosack, Klaus; Hein, Wolfgang; and Neumann, Manfred, 4,302,333, Cl. 210-456.000.
Heindl, Alfred: *See*—
  Bauernfeind, Karl; Blaess, Gerhard; and Heindl, Alfred, 4,302,843, Cl. 375-10.000.
Heisler, William C., to Peelle Company, The. Automatic drawbridge for elevator. 4,302,145, Cl. 414-608.000.
Helfer, Joel N., to American Home Products Corporation. Rotating mechanism for introducing a fetal electrode. 4,301,806, Cl. 128-642.000.
Helix Technology Corporation: *See*—
  Abrams, Richard F.; Motew, Stuart; Wojnarowski, Robert; and Wachta, Zygmunt, 4,302,419, Cl. 422-62.000.
Helle, Kees; and Groot, Robert C., to AKZO N.V. Stable dispersion of positively charged polyfluorocarbon resin particles. 4,302,374, Cl. 260-29.60F.
Hellmer, Lars; Keunecke, Gerhard; Lell, Rainer; Al-Muddarris, Ghazi R.; Pachaly, Reinhard; Stauffer, Adolf; and Vangala, V. Rao, to Davy International Aktiengesellschaft. Process for producing hydrogen and sulphur from hydrogen sulphide. 4,302,434, Cl. 423-573.00G.
Helmersson, Sture: *See*—
  Lindgren, Per; and Helmersson, Sture, 4,302,289, Cl. 376-267.000.
Hemmat, Naim: *See*—
  Bedell, John R.; Hemmat, Naim; and Polk, Donald E., 4,301,854, Cl. 164-479.000.
Henderson, Grant I. Attachment for combine harvester. 4,301,644, Cl. 56-14.300.
Henkel Corporation: *See*—
  Elmquist, Lyle F., 4,302,369, Cl. 260-17.4GC.
Henkel Kommanditgesellschaft auf Aktien: *See*—
  Giede, Wolfgang; Koch, Karlheinz; Kolaczinski, Gerhard; Rupilius, Wolfgang; and Stein, Werner, 4,302,354, Cl. 252-392.000.
Henkel Kommanditgesellschaft auf Aktien: *See*—
  Bruns, Klaus; and Weber, Ursula, 4,302,363, Cl. 252-522.00R.
Hennlich, Gunther: *See*—
  Weirich, Walter; and Hennlich, Gunther, 4,302,034, Cl. 285-26.000.
Henrickson, Angus V.: *See*—
  Berry, William W.; and Henrickson, Angus V., 4,302,427, Cl. 423-10.000.
Henwood, John J.: *See*—
  Grunert, Kurt A.; Henwood, John J.; and DeVault, Birch L., 4,302,650, Cl. 200-308.000.
Herbert, Victor. Mitogen stimulated lymphocyte transformation. 4,302,437, Cl. 424-1.000.
Hercules Incorporated: *See*—
  Marra, Joseph V., 4,302,495, Cl. 428-110.000.
Herman, Frederick L.: *See*—
  Dixon, Dale D.; and Herman, Frederick L., 4,302,375, Cl. 260-29.6RB.
Herman, Melvin J. Cable for towing vehicles. 4,302,026, Cl. 280-491.00F.
Hermann, Gerson; Patel, Babubhai C.; and Baer, Emil, to Apex Chemical Company, Inc. Process for modifying wool to render it flame resistant. 4,302,203, Cl. 8-490.000.
Herr, John A.; and Jaffe, Wolfgang, to Singer Company, The. Electromagnetic thread tension control for sewing machines. 4,301,978, Cl. 242-150.00R.
Hertzer, Ronald A.: *See*—
  Newman, Albert P.; and Hertzer, Ronald A., 4,302,066, Cl. 339-82.000.
Hesse, Anton: *See*—
  Horn, Peter; Hesse, Anton; Weyland, Peter; Straehle, Wolfgang; and Marx, Matthias, 4,302,551, Cl. 521-163.000.
Hesse, Wolfgang; Lorentz, Guido; and Rauhut, Klaus, to Hoechst Aktiengesellschaft. Low-shrinkage, acid-hardening mixtures of furan

cements and process for the preparation thereof. 4,302,380, Cl. 260-38.000.
Hesston Corporation: *See*—
  Voth, Harold W.; King, John T.; and Guinn, Ronald K., 4,301,647, Cl. 56-504.000.
Hetherington, Richard J.; Melvin, George E.; Milkovich, Stephen A.; and Urfer, Ernest N., to International Business Machines Corp. Multi-layer ceramic substrate. 4,302,625, Cl. 174-68.500.
Heurich, Charles R.; and Runck, Walter A., to Pamarco Incorporated. Anilox roll and method of making the same. 4,301,730, Cl. 101-348.000.
Hewlett-Packard Company: *See*—
  Hyde, John W.; and Gyma, Dennis W., 4,302,802, Cl. 363-21.000.
  Ware, Frederick A., 4,302,819, Cl. 364-737.000.
Heyer, Walter: *See*—
  Dannenberg, Wolfgang; Heyer, Walter; Doldissen, Theo; and Zimmermann, Manfred, 4,302,614, Cl. 568-641.000.
Heywang, Gerhard; Hartmann, Alfons; Hammann, Ingeborg; and Homeyer, Bernhard, to Bayer Aktiengesellschaft. Combating pests with 2,3-dihydro-2,2-dimethyl-7-benzofuranyl-N-carboxylated-N-methyl-carbamates. 4,302,466, Cl. 424-267.000.
Heywang, Hermann: *See*—
  Behn, Reinhard; Heywang, Hermann; and Pachonik, Horst, 4,301,765, Cl. 118-718.000.
Hiddema, Charles E.: *See*—
  Holmgren, William C.; and Hiddema, Charles E., 4,302,365, Cl. 252-548.000.
Hierholzer, Frank J., Jr.; Ancona, John A.; and Shelton, Gerald L., to Emerson Electric Co. Silicon carbide elements. 4,302,308, Cl. 428-367.000.
Higgins, Bobby L.; and Mann, James A., Jr., to Camsco, Inc. Vacuum hold-down table for an automatically controlled system for working on sheet material. 4,301,999, Cl. 269-21.000.
Hiki, Toshio; and Saga, Koichi, to Hitachi Koki Company, Limited. Printing apparatus with abrasion restrainer. 4,301,725, Cl. 101-93.140.
Hikita, Shigeyuki: *See*—
  Horiba, Tamotsu; and Hikita, Shigeyuki, 4,302,659, Cl. 219-270.000.
Hildebrandt, Peter: *See*—
  Poth, Leonhard; Hildebrandt, Peter; Pawlik, Rudolf; and Klett, Horst, 4,302,656, Cl. 219-137.0PS.
Himmetsberger, Alois; and Wittmann, Heinz, to TMC Corporation. Safety ski binding. 4,302,027, Cl. 280-618.000.
Hinzmann, Alfred, to Hauni-Richmond, Inc. Arrangement for closing the barrels of tampon inserters. 4,302,174, Cl. 425-341.000.
Hirano, Hiromichi: *See*—
  Kasamatsu, Yutaka; Ishioka, Senri; Yamaga, Makoto; Hirano, Hiromichi; and Ihara, Hitoshi, 4,302,248, Cl. 75-128.00A.
Hirano, Shuichi: *See*—
  Ikeda, Takatoshi; Hirano, Shuichi; and Kozima, Yasuyuki, 4,302,781, Cl. 358-288.000.
Hirata, Tadashi; Hashimoto, Yukio; Ogasa, Takehiro; Kobayashi, Shigeru; Sato, Akira; Sato, Kiyoshi; and Takasawa, Seigo, to Kyowa Hakko Kogyo Co., Ltd. Process of producing optically active cephalosporin analogs by enzyme selective deacylation. 4,302,540, Cl. 435-119.000.
Hirata, Tadashi; Hashimoto, Yukio; Matsukuma, Ikuo; Yoshiie, Shigeo; and Takasawa, Seigo, to Kyowa Hakko Kogyo Co., Ltd. Process of producing optically active cephalosporin analogs by enzyme selective deacylation. 4,302,541, Cl. 435-119.000.
Hirsch, Guenter: *See*—
  Cordes, Claus; Hirsch, Guenter; and Hartmann, Heinrich, 4,302,367, Cl. 260-17.00R.
Hitachi Chemical Company, Ltd.: *See*—
  Tachiki, Shigeo; Ishimaru, Toshiaki; and Hayashi, Nobuyuki, 4,302,268, Cl. 156-238.000.
Hitachi Koki Company, Limited: *See*—
  Hiki, Toshio; and Saga, Koichi, 4,301,725, Cl. 101-93.140.
Hitachi, Ltd.: *See*—
  Hayashi, Hiroshi, 4,302,287, Cl. 376-217.000.
  Hoshi, Yoshikazu, 4,301,780, Cl. 123-486.000.
  Ikeda, Takatoshi; Hirano, Shuichi; and Kozima, Yasuyuki, 4,302,781, Cl. 358-288.000.
  Kurihara, Nobuo; Nishikawa, Mitsuyo; and Kawano, Shigeyoshi, 4,302,813, Cl. 364-508.000.
  Tanaka, Hiromichi; Imamura, Osamu; and Asada, Akihiro, 4,302,833, Cl. 369-217.000.
Hitachi, Ltd., Research Development Corporation of Japan: *See*—
  Suzuki, Hideo; Ikuta, Isao; Tomita, Sadami; and Ishihara, Joo, 4,301,855, Cl. 164-254.000.
Hitachi Metals, Ltd.: *See*—
  Suzuki, Hideo; Ikuta, Isao; Tomita, Sadami; and Ishihara, Joo, 4,301,855, Cl. 164-254.000.
HITCO: *See*—
  Shaffer, Robert C., 4,302,392, Cl. 260-326.220.
Hitzman, Donald O., to Phillips Petroleum Co. Fermentation with thermophilic mixed cultures. 4,302,542, Cl. 435-247.000.
Hoberman, Barry W.: *See*—
  Litwack, Zita; Hoberman, Barry W.; and Najman, Emil R., 4,301,849, Cl. 150-33.000.
Hochtemperatur-Reaktorbau GmbH: *See*—
  Elter, Claus; Stracke, Wilfried; Stach, Heinrich; Schoening, Josef; and Schwiers, Hans G., 4,302,293, Cl. 376-381.000.
Hodson, Harry. Applicator and distributor assembly. 4,302,127, Cl. 404-102.000.
Hoechst Aktiengesellschaft: *See*—
  Baltes, Herbert; and Leupold, Ernst I., 4,302,609, Cl. 568-471.000.
  Bickel, Martin; Geiger, Rolf; Leeb, Richard; and Petri, Walter, 4,302,448, Cl. 424-177.000.
  Hesse, Wolfgang; Lorentz, Guido; and Rauhut, Klaus, 4,302,380, Cl. 260-38.000.
  Hunger, Klaus; and Pesenacker, Manfred, 4,302,388, Cl. 260-157.000.
  Hunger, Klaus; and Pesenacker, Manfred, 4,302,389, Cl. 260-157.000.
  Landler, Josef, 4,302,254, Cl. 106-272.000.
  Rackur, Gerhard; and Hoffmann, Irmgard, 4,302,468, Cl. 424-273.00B.
  Zimmermann, Josef, 4,301,795, Cl. 128-207.250.
Hoechst-Roussel Pharmaceuticals, Inc.: *See*—
  Klioze, Solomon S.; and Ehrgott, Frederick J., 4,302,590, Cl. 546-216.000.
Hoenig, Wolfgang, to ITT Industries, Inc. Circuit for measuring the duration of a pulse train, its use and circuit for its use. 4,302,665, Cl. 235-92.0TF.
Hoerner, Griffith L. Retractable bicycle carrier for vehicles. 4,301,956, Cl. 224-311.000.
Hofer, Bruce E.: *See*—
  Cabot, Richard C.; and Hofer, Bruce E., 4,302,738, Cl. 333-174.000.
Hoffman, Lewis C.; and Horowitz, Samuel J., to Du Pont de Nemours, E. I., and Company. Stable pyrochlore resistor compositions. 4,302,362, Cl. 252-520.000.
Hoffmann, Irmgard: *See*—
  Rackur, Gerhard; and Hoffmann, Irmgard, 4,302,468, Cl. 424-273.00B.
Hoffmann-La Roche Inc.: *See*—
  Comai, Karen; Sullivan, Ann; and Westley, John, 4,302,450, Cl. 424-181.000.
  Hassall, Cedric H.; Broadhurst, Michael J.; and Thomas, Gareth J., 4,302,398, Cl. 260-365.000.
Hofmann, Rudolf, Jr. Silently operating fluid pump unit. 4,302,160, Cl. 417-313.000.
Hofmeester, Paul M., to Netherlands Offshore Co. Apparatus for excavating a trench underneath a pipeline installed on the sea bottom. 4,301,606, Cl. 37-66.000.
Hogseth, Steven W.; Loff, Carl W.; and White, Dean J., to Leesona Corporation. Extrusion die assembly. 4,302,172, Cl. 425-154.000.
Hokkaido Sugar Co., Ltd.: *See*—
  Ito, Masaaki, 4,302,602, Cl. 564-428.000.
Holcomb, Dysart E.: *See*—
  Kidwell, Louis E., Jr.; and Holcomb, Dysart E., 4,302,255, Cl. 106-275.000.
Holland Company: *See*—
  Chierici, Osvaldo F., 4,301,741, Cl. 105-282.00P.
Hollemann, Karl. Hot water surface heating device. 4,301,859, Cl. 165-49.000.
Holmgren, William C.; and Hiddema, Charles E., to American Grease Stick Company. Engine degreaser composition. 4,302,365, Cl. 252-548.000.
Holyoak, Hugh K. Snake guard. 4,301,996, Cl. 256-1.000.
Holyoke, Caleb W., Jr., to Du Pont de Nemours, E. I., and Company. Pesticidal phosphorus sulfenamides. 4,302,451, Cl. 424-211.000.
Homeyer, Bernhard: *See*—
  Heywang, Gerbard; Hartmann, Alfons; Hammann, Ingeborg; and Homeyer, Bernhard, 4,302,466, Cl. 424-267.000.
Honda, Tadatoshi: *See*—
  Saitoh, Jun; Fujü, Kenzo; Nakagawa, Toshimi; Honda, Tadatoshi; Mitsuishi, Takatoshi; and Itoh, Hiroshi, 4,302,600, Cl. 564-206.000.
Honeywell, Inc.: *See*—
  Evans, Richard A.; and Rasmussen, Robert F., 4,302,033, Cl. 285-14.000.
  Lai, Juey H., 4,302,529, Cl. 430-296.000.
  Mueller, Dale A.; and Serber, Stephen L., 4,301,660, Cl. 62-126.000.
Honeywell Information Systems Inc.: *See*—
  Nibby, Chester M., Jr.; and Johnson, Robert B., 4,302,735, Cl. 333-138.000.
Honeywell Information Systems Italia: *See*—
  Zanchi, Vittorio; and Maccianti, Tiziano, 4,302,808, Cl. 364-200.000.
Hongu, Tatsuya; Suzuki, Toshio; and Ogawa, Yoshihiko, to Nisshin Spinning Co., Ltd. Microcellular polyurethane vibration isolator. 4,302,552, Cl. 521-176.000.
Hoogerheide, Pieter: *See*—
  Dukel, Cornelis; Hoogerheide, Pieter; and Niehaus, Jan G. C., 4,302,039, Cl. 292-341.160.
Hoover, Michael C.: *See*—
  Andry, Louis L.; and Hoover, Michael C., 4,302,769, Cl. 358-55.000.
Hope, Henry F.; and Hope, Stephen F. Adjustable output pump for liquids. 4,302,163, Cl. 417-473.000.
Hope, Stephen F.: *See*—
  Hope, Henry F.; and Hope, Stephen F., 4,302,163, Cl. 417-473.000.
Hopmann, Helmut: *See*—
  Munding, German; Hopmann, Helmut; Sowa, Armin; Beckervordersandforth, Christian; and Terschuren, Walter, 4,301,875, Cl. 175-12.000.
Hoppe, Henry, IV: *See*—
  Skopek, Thomas R.; Liber, Howard L.; Penman, Bruce W.; Thilly, William G.; and Hoppe, Henry, IV, 4,302,535, Cl. 435-6.000.
Horan, John J., to United States of America, Navy. High acceleration protective seat. 4,301,983, Cl. 244-122.00R.

Horiba, Tamotsu; and Hikita, Shigeyuki, to Kabushiki Kaisha Tokai Rika Denki Seisakusho. Ceramic heater-element to be used for cigarette-lighters. 4,302,659, Cl. 219-270.000.
Horiuchi, Toshiaki: *See—*
Kato, Masaru; Takeuchi, Hitoshi; and Horiuchi, Toshiaki, 4,302,514, Cl. 428-569.000.
Horn, Peter; Hesse, Aoton; Weyland, Peter; Straehle, Wolfgang; and Marx, Matthias, to BASF Aktiengesellschaft. Process for the preparation of cellular polymers having urethane groups, isocyanurate groups, or both. 4,302,551, Cl. 521-163.000.
Horng, Cheng T.; and Michel, Alwin E., to International Business Machines Corporation. Consumable amorphous or polysilicon emitter process. 4,301,588, Cl. 29-276.000.
Horowitz, Samuel J.: *See—*
Hoffman, Lewis C.; and Horowitz, Samuel J., 4,302,362, Cl. 252-520.000.
Horrobin, David F., to Efamol Limited. Pharmaceutical and dietary composition. 4,302,447, Cl. 424-145.000.
Horton, Robert C. Pile weatherstripping. 4,302,494, Cl. 428-95.000.
Hosford, Charles D.: *See—*
Lowe, Arthur T.; and Hosford, Charles D., 4,302,311, Cl. 204-192.00R.
Hoshi, Yoshikazu, to Hitachi, Ltd. Fuel injection control apparatus for internal combustion engine. 4,301,780, Cl. 123-486.000.
Hoshino, Akitika, to General Corporation, The. Refrigerating cabinet. 4,301,663, Cl. 62-453.000.
Hosiden Electronics Co., Ltd.: *See—*
Tamamura, Junichi; Murakami, Yoshiyuki; and Terada, Akira, 4,302,633, Cl. 179-111.00E.
Hossain, M. Bilayet: *See—*
Schmitz, Francis J.; van der Helm, Dick; Hossain, M. Bilayet; Gopichand, Yalamanchili; and Prasad, Ravi S., 4,302,470, Cl. 424-283.000.
Hotger, Karl, to Eickhoff Maschinenfabrik und Eisengiesserei m.b.H. Labyrinthine mechanical seal. 4,302,019, Cl. 277-56.000.
Houserman, Howard E., Jr.: *See—*
Finlayson, James W.; Reyes, Renato D.; Eberle, Ralph F.; Wojcik, Thaddeus A.; Gumbert, James L.; McKeever, Robert B.; Nagy, Emery E.; and Houserman, Howard E., Jr., 4,302,146, Cl. 414-744.00R.
Houston, Roger B.: *See—*
Thompson, Robert B.; Vasile, Carmine F.; and Houston, Roger B., 4,301,684, Cl. 73-602.000.
Houweling, Hans-Hermann, to Gebr. Bode & Co. Anti-closing device for doors which automatically open and close. 4,301,621, Cl. 49-27.000.
Howard, Gordon L.: *See—*
Bowser, Dale A.; and Howard, Gordon L., 4,302,015, Cl. 273-271.000.
Howard, Thomas B., Jr., to RCA Corporation. Etching tank in which the solution circulates by convection. 4,302,273, Cl. 156-345.000.
Howarth, Wesley L.: *See—*
Sharbaugh, John E.; and Howarth, Wesley L., 4,302,296, Cl. 376-290.000.
Howe, David M.; Otto, Jeffrey B.; and Traskos, Richard T., to Rogers Corporation. Process for preparing extrudable polyimide granules. 4,302,413, Cl. 264-126.000.
Howell, Stephen L., to Kimball International, Inc. High note data generator. 4,301,703, Cl. 84-1.010.
Hruda, Robert M.; and Wayland, Paul O., to Westinghouse Electric Corp. Vacuum switch assembly. 4,302,642, Cl. 200-144.00B.
Hubbard, Richard G., Jr.; and Modeen, Douglas P., to United Technologies Corporation. Color raster scanner for recording cartographic data. 4,302,770, Cl. 358-75.000.
Hudson Products Corporation: *See—*
Larinoff, Michael W., 4,301,861, Cl. 165-110.000.
Huerta, Joseph: *See—*
Flatau, Abraham; and Huerta, Joseph, 4,301,736, Cl. 102-503.000.
Huff, Joel R.; King, Stella W.; and Saari, Walfred S., to Merck & Co., Inc. 2-(4-Aminopiperidino)pyrazines. 4,302,455, Cl. 424-250.000.
Hufton, Arthur G., to Teledyne Industries, Inc. Engine fuel mixture control system. 4,301,779, Cl. 123-478.000.
Hugemann, Bernhard: *See—*
Bol, Johannes; Classen, Meinhard; Gunther, Rainer; Hugemann, Bernhard; and Scheiding, Uwe, 4,301,790, Cl. 128-6.000.
Hughes Aircraft Company: *See—*
Alm, Ake W., 4,302,774, Cl. 358-113.000.
Hughes Helicopters, Inc.: *See—*
Bohorquez, Luis A.; Cleary, Michael M.; Ash, Charles C.; Van Osten, Don E.; Pounds, Robert B.; and Sallach, John H., 4,301,709, Cl. 89-11.000.
Hughes, Thomas V. Water toy. 4,302,003, Cl. 272-1.00B.
Hughes Tool Company: *See—*
Cloud, John D., 4,301,877, Cl. 175-340.000.
Huguenard, Albert P.: *See—*
Audran, Roger G. L.; and Huguenard, Albert P., 4,302,523, Cl. 430-140.000.
Humiston, Gerald F. Desalination apparatus with power generation. 4,302,297, Cl. 202-185.00R.
Hummel, Steven L. Solar water reclamation system. 4,301,788, Cl. 126-435.000.
Humphrey, Anthony M.; and Lewis, Anthony, to Albright & Wilson Ltd. Preparation of iso-alpha-acid-containing hop extracts. 4,302,479, Cl. 426-600.000.
Hunger, Klaus; and Pesenacker, Manfred, to Hoechst Aktiengesellschaft. Monoazo compounds deriving from meta-ammo-benzoic acid anilides and acetoacetyl amino-benzimidazolone. 4,302,388, Cl. 260-157.000.
Hunger, Klaus; and Pesenacker, Manfred, to Hoechst Aktiengesellschaft. Azo compounds deriving from amino benzoic acid anilides and acetoacetylamino-benzimidazolone. 4,302,389, Cl. 260-157.000.
Hunter, Alexander D., Jr.; and Dennison, William T., to United Technologies Corporation. Turbine blade support. 4,302,062, Cl. 308-22.000.
Hunter, Edwin J., to Toro Company, The. Intermittent sprinkler. 4,301,967, Cl. 239-99.000.
Hunter, Lee. Vehicle wheel alignment apparatus. 4,302,104, Cl. 356-152.000.
Hunziker, Werner, to Aktiengesellschaft Karrer, Weber & Cie. Hot and cold water sanitary mixing set. 4,301,836, Cl. 137-625.400.
Huqueriza, Cesar S. Ball throwing and catching device. 4,302,017, Cl. 273-323.000.
Huriau, Alain, to Thomson-CSF. Digital radio repeater with regenerator. 4,302,842, Cl. 375-3.000.
Hutter, Charles G., III, to Physical Systems. Adhesive attachment. 4,302,492, Cl. 428-40.000.
Hyams, William M., to Crucible Inc. Ingot mold assembly. 4,301,991, Cl. 249-174.000.
Hyde, John W.; and Gyma, Dennis W., to Hewlett-Packard Company. Flyback power supply regulator. 4,302,802, Cl. 363-21.000.
Hydro-Rain Inc.: *See—*
Karbo, Richard S., 4,301,992, Cl. 251-46.000.
Ichihara, Shoji; and Seo, Iwan, to Mitsubishi Petrochemical Co., Ltd. Method of producing pyro-electric and piezo-electric elements. 4,302,408, Cl. 264-22.000.
Icoma Packtecbnik GmbH: *See—*
Kuckhermann, Gustav, 4,301,842, Cl. 141-114.000.
Ihara, Hitoshi: *See—*
Kasamatsu, Yutaka; Ishioka, Senri; Yamaga, Makoto; Hirano, Hiromichi; and Ihara, Hitoshi, 4,302,248, Cl. 75-128.00A.
Iino, Akira: *See—*
Yamaguchi, Yoshimasa; and Iino, Akira, 4,301,839, Cl. 139-29.000.
Ikada, Yoshito: *See—*
Handa, Hajime; Yonekawa, Yasuhiro; Yamagata, Sen; Taki, Waro; Ikada, Yoshito; and Iwata, Hiroo, 4,301,803, Cl. 128-349.00B.
Ikeda, Kunio, to Ricoh Co., Ltd. Method of forming plate having fine bores. 4,301,585, Cl. 29-157.00C.
Ikeda, Masaki, to Tomy Kogyo Co., Inc. Toy having member capable of going from a first position to a second position and automatically returning to the first position. 4,301,615, Cl. 46-105.000.
Ikeda, Takatoshi; Hirano, Shuichi; and Kozima, Yasuyuki, to Hitachi, Ltd. Facsimile system. 4,302,781, Cl. 358-288.000.
Ikeda, Takeji: *See—*
Hattori, Kenro; Ogawa, Takeshi; Ochiai, Minoru; Tomikawa, Takeshi; and Ikeda, Takeji, 4,302,489, Cl. 427-244.000.
Ikeda, Toshiaki: *See—*
Kasanami, Tohru; Ikeda, Toshiaki; Murakawa, Tetsuya; and Kaneko, Toshimi, 4,302,736, Cl. 333-172.000.
Ikuta, Isao: *See—*
Suzuki, Hideo; Ikuta, Isao; Tomita, Sadami; and Ishihara, Joo, 4,301,855, Cl. 164-254.000.
Illinois Tool Works Inc.: *See—*
Olsen, Robert C., 4,301,918, Cl. 206-150.000.
Ilsemann, Heino. Labeling device, preferably for cassettes or the like. 4,302,277, Cl. 156-567.000.
Imada, Kiyoshi; Ueno, Susumu; and Abe, Tokuji, to Shin-Etsu Chemical Co. Ltd. Method for the improvement of gramophone records. 4,302,307, Cl. 204-169.000.
Image Systems, Inc.: *See—*
Fitzgerald, Timothy P.; Novak, Lubomir; and Engman, Larry O., 4,301,929, Cl. 209-608.000.
Imamura, Osamu: *See—*
Tanaka, Hiromichi; Imamura, Osamu; and Asada, Akihiro, 4,302,833, Cl. 369-217.000.
Imero Fiorentino Associates, Inc.: *See—*
Leay, John, 4,301,599, Cl. 33-277.000.
Imfeld, Thomas: *See—*
Muhlemann, Hans R.; Firestone, Allen R.; and Imfeld, Thomas, 4,302,441, Cl. 424-48.000.
Imgegnoli, Alessandro; and Ennio, Corona, to International Standard Electric Corporation. Telephonic answering device. 4,302,630, Cl. 179-6.070.
Imo-Industri AB: *See—*
Lonnebring, Arne, 4,302,165, Cl. 418-197.000.
Imperial Chemical Industries Limited: *See—*
Cartwright, David, 4,302,242, Cl. 71-94.000.
Lansbury, Robert C.; and Heggs, Thomas G., 4,302,504, Cl. 428-332.000.
Inada, Kohji: *See—*
Miyake, Tetsuya; Ogawa, Norito; Inada, Kohji; and Takeda, Kunihiko, 4,302,424, Cl. 422-159.000.
Inagaki, Nobuhiro: *See—*
Nakayama, Takayuki; Inagaki, Nobuhiro; Ishihara, Michio; and Namazu, Ryosuke, 4,302,070, Cl. 350-96.190.
Inami, Yasuhiko: *See—*
Nakauchi, Hiroshi; Inami, Yasuhiko; Uede, Hisashi; and Wada, Tomio, 4,302,751, Cl. 340-763.000.
Indeherbergh, Jean: *See—*
Guillaume, Robert; Pleska, Jean-Pierre; and Indeherbergh, Jean, 4,302,303, Cl. 204-128.000.

Indus Wheel Company Div. of Carlisle Corporation: *See—*
Gatsos, Stephen L.; and Gardner, Jerry A., 4,301,902, Cl. 192-11.000.
Industrie Pirelli S.p.A.: *See—*
Maffeis, Flavio; and Franchino, Fulvio, 4,302,167, Cl. 425-28.00B.
Ing. C. Olivetti & C., S.p.A.: *See—*
Pisani, Federico; and Graciotti, Alessandro, 4,302,755, Cl. 340-734.000.
Ingram, Arlen E. Tennis ball pocket. 4,301,549, Cl. 2-250.000.
Ingram, Gary L.; and Jolley, Paul E., to Spencer Wright Industries, Inc. Tufting apparatus for forming loop pile. 4,301,752, Cl. 112-79.00R.
Injerd, William G., to Boeing Company, The. Countersink nozzle for sealant application. 4,302,271, Cl. 156-293.000.
Inoue, Haruo: *See—*
Sano, Takezo; Inoue, Haruo; and Furuta, Akihiro, 4,302,528, Cl. 430-273.000.
Inoue, Hidehiko, to Nippon Electric Co., Ltd. Methods of reducing blooming in the drive of charge-coupled image sensors. 4,302,779, Cl. 358-213.000.
Inoue, Noboru, to Kabushiki Kaisha Dental Electronics Kenkyujo. Dental stethoscope. 4,302,627, Cl. 179-1.0ST.
Inoue, Nobuyoshi: *See—*
Harase, Toshikatsu; Saito, Toshihisa; and Inoue, Nobuyoshi, 4,302,091, Cl. 354-246.000.
Inoue, Tokuta; Nakamura, Norihiko; and Itoh, Takaaki, to Toyota Jidosha Kogyo Kabushiki Kaisha. Variable venturi type carburetor. 4,302,405, Cl. 261-44.00C.
Inouye, Shigeharu: *See—*
Iwamatsu, Katsuyoshi; Itoh, Jiro; Omoto, Shoji; Tsuruoka, Takashi; and Inouye, Shigeharu, 4,302,580, Cl. 544-21.000.
Institut Francais du Petrole: *See—*
Mikitenko, Paul; and Asselineau, Lionel, 4,302,298, Cl. 203-75.000.
Institut Merieux: *See—*
Pla, Jean F.; and Liautaud, Jacques C., 4,302,445, Cl. 424-101.000.
Institutet for Verkstadsteknisk Forskning IVF: *See—*
Edling, Lars G., 4,302,655, Cl. 219-130.320.
International Automated Machinery, Inc.: *See—*
Chung, Yun H., 4,301,926, Cl. 206-620.000.
International Business Machines Corporation: *See—*
Bohg, Armin; and Hartmann, Kurt, 4,302,700, Cl. 313-292.000.
Bouricius, Willard G.; and Stuckert, Paul E., 4,302,810, Cl. 364-200.000.
Fang, Frank F.; and Yu, Hwa N., 4,302,764, Cl. 357-23.000.
Gersbach, John E.; Kim, Ick W.; and Zehle, Adolf M., 4,302,823, Cl. 365-190.000.
Hetherington, Richard J.; Melvin, George E.; Milkovich, Stephen A.; and Urfer, Ernest N., 4,302,625, Cl. 174-68.500.
Horng, Cheng T.; and Michel, Alwin E., 4,301,588, Cl. 29-276.000.
May, Dean S.; and Rigotti, James M., 4,302,116, Cl. 400-124.000.
Schaefer, John O., 4,302,118, Cl. 400-208.000.
International Harvester Company: *See—*
Thomas, David H., 4,301,570, Cl. 16-85.000.
International Minerals & Chemical Corporation: *See—*
Berry, William W.; and Henrickson, Angus V., 4,302,427, Cl. 423-10.000.
International Standard Electric Corporation: *See—*
Imgegnoli, Alessandro; and Ennio, Corona, 4,302,630, Cl. 179-6.070.
International Telephone and Telegraph Corporation: *See—*
Acar, Ali, 4,301,715, Cl. 91-457.000.
Shenoi, Kishan; Agrawal, Bhagwati P.; and Chu, Larry K. I., 4,302,631, Cl. 179-15.55R.
Turbak, Albin F.; El-Kafrawy, Adel; Snyder, Fred W., Jr.; and Auerbach, Andrew B., 4,302,252, Cl. 106-163.00R.
Intrama S.A.: *See—*
Saint Georges Chaumet, Bertrand, 4,301,698, Cl. 81-468.000.
Inui, Takayasu, to Kabushiki Kaisha Komatsu Seisakusho. Hydraulic excavator. 4,301,607, Cl. 37-118.00R.
IPCO Hospital Supply Corporation (Whaledent International Division): *See—*
Schneiderman, Max, 4,301,801, Cl. 128-303.140.
Ishida, Masamitsu: *See—*
Kato, Hisatoyo; Ishida, Masamitsu; and Matsumoto, Seiji, 4,302,672, Cl. 250-327.100.
Ishida, Masato: *See—*
Kan, Yasuhito; Kimura, Yoshimasa; Ishida, Masato; Miyamoto, Koichi; and Tohyama, Yoshikuni, 4,302,098, Cl. 355-55.000.
Ishiguro, Toshihiro; Ukawa, Kiyoshi; and Nohara, Akira, to Takeda Chemical Industries, Ltd. 1-Azaxanthone-3-carboxylic acids and their production. 4,302,463, Cl. 424-263.000.
Ishihara, Joo: *See—*
Suzuki, Hideo; Ikuta, Isao; Tomita, Sadami; and Ishihara, Joo, 4,301,855, Cl. 164-254.000.
Ishihara, Michio: *See—*
Nakayama, Takayuki; Inagaki, Nobuhiro; Ishihara, Michio; and Namazu, Ryosuke, 4,302,070, Cl. 350-96.190.
Ishikawa, Seiji, to Mitsubishi Kasei Kogyo Kabushiki Kaisha. Titration control method. 4,302,299, Cl. 204-1.00T.
Ishimaru, Toshiaki: *See—*
Tachiki, Shigeo; Ishimaru, Toshiaki; and Hayashi, Nobuyuki, 4,302,268, Cl. 156-238.000.
Ishioka, Senri: *See—*
Kasamatsu, Yutaka; Ishioka, Senri; Yamaga, Makoto; Hirano, Hiromichi; and Ihara, Hitoshi, 4,302,248, Cl. 75-128.00A.
Ishitani, Shigeo; Kimura, Shinji; Takao, Hiroshi; and Uchida, Masaaki, to Nissan Motor Co., Ltd. Device for producing control signal for feedback control of air/fuel mixing ratio. 4,302,312, Cl. 204-195.00S.
Ishizaka, Otoharu. Process for generating electric power using air and water, and apparatus for carrying out the process. 4,302,516, Cl. 429-9.000.
Ishizuka Glass Co., Ltd.: *See—*
Okura, Tsunehiko, 4,301,724, Cl. 101-35.000.
Ishkhanov, Evgeny S.: *See—*
Chernogorenko, Vasily B.; Alzhanov, Tleubai M.; Lynchak, Kima A.; Muchnik, Simon V.; Ishkhanov, Evgeny S.; Sergienko, Vladimir Y.; Sapian, Vladimir G.; Koverya, Vladimir M.; Pobortsev, Mendel E.; Markovsky, Evgeny A.; Dmitrenko, Valentina V.; Bykov, Vladimir I.; Kipchakbaev, Alexandr D.; and Vopilov, Alexandr N., 4,302,249, Cl. 75-143.000.
Isobe, Takashi: *See—*
Sato, Akira; and Isobe, Takashi, 4,302,077, Cl. 350-257.000.
Isobe, Toshihiro: *See—*
Fujiwara, Shigeru; Nagahara, Masayosi; Nagai, Satoshi; and Isobe, Toshihiro, 4,302,372, Cl. 260-29.300.
Isopag AG: *See—*
Neumann, Peter, 4,301,633, Cl. 52-309.400.
Israel Institute for Biological Research: *See—*
Halmann, Mirjam; Velan, Baruch; and Seri, Tamar, 4,302,534, Cl. 435-6.000.
Itakura, Tsuyoshi: *See—*
Willinger, Allan H.; and Itakura, Tsuyoshi, 4,301,767, Cl. 119-5.000.
Itani, Takashi, to Canon Kabushiki Kaisha. Tape cassette and video recording and reproducing system using the same. 4,302,787, Cl. 360-85.000.
Itey-Bernard, Georges: *See—*
Dera, Alain; and Itey-Bernard, Georges, 4,301,882, Cl. 180-153.000.
Ito, Masaaki, to Hokkaido Sugar Co., Ltd. 2-(N,N-Dimethylamino) indan-1,3-dione and method for manufacture thereof. 4,302,602, Cl. 564-428.000.
Itoh, Hiroshi: *See—*
Saitoh, Jun; Fujii, Kenzo; Nakagawa, Toshimi; Honda, Tadatoshi; Mitsuishi, Takatoshi; and Itoh, Hiroshi, 4,302,600, Cl. 564-206.000.
Itoh, Jiro: *See—*
Iwamatsu, Katsuyoshi; Itoh, Jiro; Omoto, Shoji; Tsuruoka, Takashi; and Inouye, Shigeharu, 4,302,580, Cl. 544-21.000.
Itoh, Takaaki: *See—*
Inoue, Tokuta; Nakamura, Norihiko; and Itoh, Takaaki, 4,302,405, Cl. 261-44.00C.
ITT Industries, Inc.: *See—*
Gollinger, Wolfgang; Grosse, Joachim; and Uhlenhoff, Arnold, 4,302,690, Cl. 307-451.000.
Hoenig, Wolfgang, 4,302,665, Cl. 235-92.0TF.
ITW de France: *See—*
Morel, Henri, 4,301,986, Cl. 248-221.300.
ITW Limited of Darville House: *See—*
Clinch, Colin W. F.; and Harley, David N., 4,301,706, Cl. 411-57.000.
Iwai, Tastuyuki: *See—*
Hayakawa, Noboru; Furusato, Akaru; Saito, Toshio; and Iwai, Tastuyuki, 4,302,332, Cl. 210-369.000.
Iwamatsu, Katsuyoshi; Itoh, Jiro; Omoto, Shoji; Tsuruoka, Takashi; and Inouye, Shigeharu, to Meiji Seika Kaisha, Ltd. Process for the production of a cephamycin derivative. 4,302,580, Cl. 544-21.000.
Iwamatsu, Masayuki, to Nippon Gakki Seizo Kabushiki Kaisha. Power amplifier having bias circuit with temperature compensation. 4,302,727, Cl. 330-266.000.
Iwanaga, Kazuyoshi; Sugano, Kazuhiko; and Ohtsuka, Kunio, to Nissan Motor Company, Limited. Hydraulic control system for automatic power transmission having transmission throttle valve with failsafe means. 4,301,697, Cl. 74-869.000.
Iwasawa, Teruo: *See—*
Yamazaki, Masafumi; Takayama, Shuichi; Tsuboshima, Kosaku; Nakajima, Yoshio; and Iwasawa, Teruo, 4,302,780, Cl. 358-228.000.
Iwata, Hiroo: *See—*
Handa, Hajime; Yonekawa, Yasuhiro; Yamagata, Sen; Taki, Waro; Ikada, Yoshito; and Iwata, Hiroo, 4,301,803, Cl. 128-349.00B.
Iwata, Tamotsu: *See—*
Kohmura, Isao; Iwata, Tamotsu; and Oka, Shozi, 4,302,526, Cl. 430-227.000.
Iwatsu Electric Co., Ltd.: *See—*
Saito, Kimiharu, 4,302,704, Cl. 315-17.000.
J.I. Case Company: *See—*
Jensen, Louis T., 4,301,901, Cl. 192-4.00C.
J. R. Simplot Company: *See—*
Hamann, Michael L.; Guidinger, Nicholas C.; and Fisher, Wayland I., 4,302,478, Cl. 426-517.000.
Jacobsen, Wayno A.; and Thomsen, James P., to Koss Corporation. Headphone construction. 4,302,635, Cl. 179-156.00R.
Jaffe, Erwin; Matalia, Harshad; Rinehart, William D.; Warner, Frederick L.; Navi, Menashe; and Merker, George, to American Newspaper Publishers Association. Rotary printing press with a bumping mechanism. 4,301,728, Cl. 101-220.000.
Jaffe, Wolfgang: *See—*
Herr, John A.; and Jaffe, Wolfgang, 4,301,978, Cl. 242-150.00R.
Jager, Walter: *See—*
von Waclawiczek, Herbert; and Jager, Walter, 4,302,292, Cl. 376-325.000.

Jakabhazy, Stephen Z.; and Zeman, Leoš J., to Abcor, Inc. Microporous polymeric membrane. 4,302,334, Cl. 210-500.200.
Jakubowicz, Raymond F.; and Schnipelsky, Paul N., to Eastman Kodak Company. Analyzer featuring a contacting reflectometer. 4,302,420, Cl. 422-63.000.
Janick, Jules; and Pence, Valerie C., to Purdue Research Foundation. Plant tissue produced by non-agricultural proliferation of cacao embryos. 4,301,619, Cl. 47-58.000.
Janome Sewing Machine Co. Ltd.: *See—*
Tonomura, Yoshiaki, 4,301,757, Cl. 112-254.000.
Jansen, Martin B., to Amtel, Inc. Fixed turret subsea hydrocarbon production terminal. 4,301,840, Cl. 141-98.000.
Janssen, Erwin: *See—*
Liessen, Karl-Heinz; and Janssen, Erwin, 4,301,721, Cl. 100-170.000.
Japan Atomic Energy Research Institute: *See—*
Wakayama, Naoaki; Tomoda, Toshimasa; and Fukakusa, Shinji, 4,302,696, Cl. 313-93.000.
Japan Synthetic Rubber Co., Ltd.: *See—*
Kotani, Teizo; Nagato, Masaki; and Arai, Kozo, 4,302,361, Cl. 252-503.000.
Jasper, Marilyn A.: *See—*
Cox, John T.; Garber, Michael B.; Jasper, Marilyn A.; and Longshore, Randolph E., 4,302,531, Cl. 430-317.000.
Jauch, Kurt: *See—*
Bader, Eugen; and Jauch, Kurt, 4,301,581, Cl. 29-38.00C.
Jennie, Fred: *See—*
Peterson, Ronald W.; and Jennie, Fred, 4,301,609, Cl. 42-69.00A.
Jensen, Louis T., to J.I. Case Company. Combined foot brake and parking brake. 4,301,901, Cl. 192-4.00C.
Jensen, Ronald N. Anti-moment gyro for windmill. 4,302,152, Cl. 416-18.000.
Jernigan, James L., to United States of America, Navy. Cavity dumper. 4,302,730, Cl. 331-94.50C.
Jeumont-Schneider: *See—*
Dumont, Alian; Piolat, Christian; and Oeillet, Guy, 4,302,636, Cl. 179-170.0NC.
Jewitt, James W.; Johnston, Ross W.; and Platter, Sanford, to Computer Peripherals, Inc. Pneumatic tension sensor. 4,301,687, Cl. 73-862.450.
Jocteur, Robert: *See—*
Bendayan, Jacques; and Jocteur, Robert, 4,302,073, Cl. 350-96.230.
John Fluke Mfg. Co., Inc.: *See—*
Brodie, Benjamin T., 4,302,689, Cl. 307-353.000.
John, Phillip M.; Belanger, Raymond J.; and Paikoff, Myron, to Sterling Drug Inc. Easily-swallowed, powder-free and gastric-disintegrable aspirin tablet thinly-coated with hydroxypropyl methylcellulose and aqueous spray-coating preparation thereof. 4,302,440, Cl. 424-35.000.
Johnson, Anderson F., Jr.; and Reinhard, Fred J., to Western Electric Co., Inc. Capturing articles ejected from a carrier and redirecting such articles. 4,302,134, Cl. 406-51.000.
Johnson, Arthur W. Hydrodynamic induced draft and water cooled flue gas hot water heater. 4,301,773, Cl. 122-31.00A.
Johnson, Bruce K.; and Van Allen, David, to Polaroid Corporation. Tamper resistant snap-fit strobe housing. 4,302,795, Cl. 362-16.000.
Johnson, James B.: *See—*
Peregrim, Frank; Johnson, James B.; and Winkler, Gerhard B., 4,301,734, Cl. 102-413.000.
Johnson, Robert B.: *See—*
Nibby, Chester M., Jr.; and Johnson, Robert B., 4,302,735, Cl. 333-138.000.
Johnson, Robert N. Recreational device. 4,302,006, Cl. 272-115.000.
Johnson, Russell W.: *See—*
United States of America, National Aeronautics and Space Administration; Stockton, Ronald J.; and Johnson, Russell W., 4,302,734, Cl. 333-104.000.
Johnson, Samuel O. Automatic lift off weight rack for barbells. 4,302,009, Cl. 272-123.000.
Johnston, John T.; and Venorsky, George W., to United States of America, Air Force. Aircraft load factor overload warning system. 4,302,745, Cl. 340-27.0AT.
Johnston, Ross W.: *See—*
Jewitt, James W.; Johnston, Ross W.; and Platter, Sanford, 4,301,687, Cl. 73-862.450.
Johnston, Stephen P., to S. J. Electro Systems, Inc. Float switches with wide differential. 4,302,641, Cl. 200-84.00R.
Jolley, Paul E.: *See—*
Ingram, Gary L.; and Jolley, Paul E., 4,301,752, Cl. 112-79.00R.
Jones, Eldon D. Truck hoist. 4,302,050, Cl. 298-22.00J.
Jones, Leslie A.: *See—*
Haskew, Francis A.; Jones, Leslie A.; Morris, Alan R.; Tothfalusi, Miklos; and Plummer, Derek, 4,302,054, Cl. 299-31.000.
Jones, Thomas R.: *See—*
Gunter, Josef K.; O'Neal, James E.; and Jones, Thomas R., 4,301,573, Cl. 19-200.000.
Jopp, Rudolf: *See—*
Dabinski, Horst, 4,302,082, Cl. 353-27.00R.
Jorgensen, Robert J.: *See—*
Karol, Frederick J.; Goeke, George L.; Wagner, Burkhard E.; Fraser, William A.; Jorgensen, Robert J.; and Friis, Nils, 4,302,566, Cl. 526-125.000.
Jukkola, Walfred W.; Leon, Albert M.; Van Dyk, Garritt C., Jr.; McCoy, Daniel E.; Fisher, Barry L.; Saiers, Timothy L.; and Karstetter, Marlin E., to Dorr-Oliver Incorporated. Fluidized bed heat exchanger with water cooled air distributor and dust hopper. 4,301,771, Cl. 122-4.00D.
Juneja, Prem S., to Procter & Gamble Company, The. Hair dyeing method. 4,302,199, Cl. 8-405.000.
Juridical Foundation, The Chemo-Sero-Therapeutic Research Institute: *See—*
Funatsu, Akinobu; Oyama, Shuzoh; Akimoto, Yoshinori; and Ohashi, Komei, 4,302,384, Cl. 260-112.00B.
K A Bergs Smide AB: *See—*
Fredriksson, Lars O. A., 4,301,589, Cl. 29-283.000.
K. K. Tokai Rika Denki Seisakusho: *See—*
Nishimura, Yuji; and Kubota, Tatsushi, 4,302,031, Cl. 280-804.000.
Kabacoff, Bernard: *See—*
Socci, Robert; Gunderman, Anthony; Fotiu, Eustace; and Kabacoff, Bernard, 4,302,442, Cl. 424-61.000.
Kabushiki Kaisha Dental Electronics Keokyujo: *See—*
Inoue, Noboru, 4,302,627, Cl. 179-1.0ST.
Kabushiki Kaisha Fujikoshi: *See—*
Araki, Kazuo, 4,302,743, Cl. 335-251.000.
Kabushiki Kaisha Komatsu Seisakusho: *See—*
Inui, Takayasu, 4,301,607, Cl. 37-118.00R.
Kabushiki Kaisha Shinsei Industries: *See—*
Fujita, Mituo, 4,301,729, Cl. 101-291.000.
Kabushiki Kaisha Tokai Rika Denki Seisakusho: *See—*
Horiba, Tamotsu; and Hikita, Shigeyuki, 4,302,659, Cl. 219-270.000.
Kabushiki Kaisha Tokyo Kikai Seisakusho: *See—*
Kawada, Tomoshi, 4,302,198, Cl. 493-14.000.
Kabushiki Kaisha Toyoda Jidoshokki Seisakusho: *See—*
Miyamoto, Noriaki, 4,301,572, Cl. 19-97.000.
Kaenel, Reginald A., to AMF Incorporated. Electronic bowling scoring system with video communication interface between manager console and lane score consoles. 4,302,010, Cl. 273-54.00C.
Kaifuchi, Toshiaki, to Mitsubishi Light Metal Ind., Ltd. Method of feeding alumina to an aluminium electrolytic cell and apparatus therefor. 4,302,302, Cl. 204-67.000.
Kaldor, Andrew; and Rabinowitz, Paul, to Exxon Research & Engineering Co. Isotope separation process. 4,302,305, Cl. 204-157.10H.
Kallenbach, Ralph M. Pipe whip restraint system and energy absorbing device therefor. 4,301,989, Cl. 248-548.000.
Kamura, Takashi; and Taniguchi, Hiroshi, to Matsushita Electric Industrial Co., Ltd. System for reducing or suppressing noise components in television signal. 4,302,768, Cl. 358-36.000.
Kan, Yasuhito; Kimura, Yoshimasa; Ishida, Masato; Miyamoto, Koichi; and Tohyama, Yoshikuni, to Canon Kabushiki Kaisha. Printing apparatus. 4,302,098, Cl. 355-55.000.
Kanda, Hiroshi: *See—*
Mikami, Yasuo; Kanda, Hiroshi; and Uno, Akio, 4,302,473, Cl. 426-46.000.
Mikami, Yasuo; Kanda, Hiroshi; and Uno, Akio, 4,302,474, Cl. 426-52.000.
Kandler, James J.; Basler, Peter H.; and Schwehr, Gregory D., to General Electric Company. Membrane touch switches. 4,302,647, Cl. 200-159.00B.
Kane, Thomas J.: *See—*
Buckner, Carrol E.; Cook, C. Glenn; and Kane, Thomas J., 4,301,783, Cl. 126-63.000.
Kaneko, Takashi: *See—*
Yoshimura, Isao; Hata, Hideo; and Kaneko, Takashi, 4,302,557, Cl. 525-211.000.
Kaneko, Toshimi: *See—*
Kasanami, Tohru; Ikeda, Toshiaki; Murakawa, Tetsuya; and Kaneko, Toshimi, 4,302,736, Cl. 333-172.000.
Kangol Magnet Limited: *See—*
Clay, William S. G., 4,302,030, Cl. 280-802.000.
Kansa Corporation: *See—*
Waddell, Gerald E.; Windler, Clayton W.; and Swint, Ronnie K., 4,302,025, Cl. 280-79.10A.
Kao Soap Company, Limited: *See—*
Yamamura, Masaaki; Moriyama, Noboru; and Watanabe, Shinichi, 4,302,212, Cl. 44-51.000.
Kaplan, Murray A.; and Granatek, Alphonse P., to Bristol-Myers Company. Pharmaceutical compositions. 4,302,446, Cl. 424-131.000.
Karaichev, Sergei I.: *See—*
Benyaev, Negmat E.; Boskanian, Razmik A.; Yarovenko, Viktor I.; Durbrov, Jury N.; Ustinnikov, Boris A.; Babichenko, Ljudmila V.; Vakulenko, Mikhail D.; Kramarsky, Nikolai A.; Shamrin, Vitaly F.; Karaichev, Sergei I.; Efremov, Boris V.; and Lantsetova, Tatyana N., 4,302,543, Cl. 435-161.000.
Karbo, Richard S., to Hydro-Rain Inc. Diaphragm valve. 4,301,992, Cl. 251-46.000.
Karol, Frederick J.; Goeke, George L.; Wagner, Burkhard E.; Fraser, William A.; Jorgensen, Robert J.; and Friis, Nils, to Union Carbide Corporation. Preparation of ethylene copolymers in fluid bed reactor. 4,302,566, Cl. 526-125.000.
Karol, Frederick J.: *See—*
Goeke, George L.; Wagner, Burkhard E.; and Karol, Frederick J., 4,302,565, Cl. 526-88.000.
Karstetter, Marlin E.: *See—*
Jukkola, Walfred W.; Leon, Albert M.; Van Dyk, Garritt C., Jr.; McCoy, Daniel E.; Fisher, Barry L.; Saiers, Timothy L.; and Karstetter, Marlin E., 4,301,771, Cl. 122-4.00D.
Kasamatsu, Yutaka; Ishioka, Senri; Yamaga, Makoto; Hirano, Hiromichi; and Ihara, Hitoshi, to Kobe Steel, Limited. High manganese non-magnetic steel with excellent weldability and machinability. 4,302,248, Cl. 75-128.00A.
Kasanami, Tohru; Ikeda, Toshiaki; Murakawa, Tetsuya; and Kaneko, Toshimi, to Murata Manufacturing Co., Ltd. Electrical composite part. 4,302,736, Cl. 333-172.000.

Kasevich, Raymond S.; Kolker, Myer; and Dwyer, Arthur S., to Raytheon Company. In situ radio frequency selective heating process and system. 4,301,865, Cl. 166-248.000.
Kato, Hisatoyo; Matsumoto, Seiji; and Miyahara, Junji, to Fuji Photo Film Co., Ltd. Radiation image read-out device. 4,302,671, Cl. 250-327.100.
Kato, Hisatoyo; Ishida, Masamitsu; and Matsumoto, Seiji, to Fuji Photo Film Co., Ltd. Image gradation processing method and apparatus for radiation image recording system. 4,302,672, Cl. 250-327.100.
Kato, Masaru; Takeuchi, Hitoshi; and Horiuchi, Toshiaki, to Mitsubishi Denki Kabushiki Kaisha. Contact for vacuum interrupter. 4,302,514, Cl. 428-569.000.
Kato, Masataka; and Shirai, Hiroo, to Brother Kogyo Kabushiki Kaisha. Multiple pattern sewing machine. 4,301,755, Cl. 112-158.00E.
Kato, Takashi: *See—*
Nakamura, Norihiko; and Kato, Takashi, 4,302,404, Cl. 261-44.00C.
Katsuragawa, Kanzi; Sakka, Hideo; and Kihara, Keiichi, to Toyo Soda Manufacturing Co., Ltd. Bromination of side chain of m-phenoxytoluene. 4,302,306, Cl. 204-158.0HA.
Katsyguri IJYBI: *See—*
Ueno, Atsuyuki, 4,302,319, Cl. 204-238.000.
Kausche, Helmold; and Hebbeker, Heinz, to Siemens Aktiengesellschaft. RC Network. 4,302,737, Cl. 333-172.000.
Kavis, George. Puzzle assembly and display apparatus. 4,302,013, Cl. 273-157.00R.
Kawada, Tomoshi, to Kabushiki Kaisha Tokyo Kikai Seisakusho. Odd copies bundling system in connection with fixed copies auto-bundling process. 4,302,198, Cl. 493-14.000.
Kawaguchi, Hiroshi, to Toyota Jidosha Kogyo Kabushiki Kaisha. Dual type hydraulic braking system for a vehicle. 4,302,056, Cl. 303-6.00C.
Kawaguchi, Takeyuki; Taketani, Yutaka; Sasaki, Noriaki; Minematsu, Hiroyoshi; Hayashi, Yuzuru; and Hara, Shigeyoshi, to Teijin Limited. Semipermeable composite membrane. 4,302,336, Cl. 210-654.000.
Kawamura, Masaharu; and Uchidni, Masanori, to Canon Kabushiki Kaisha. Automatic exposure control camera with means to lock continuously renewed exposure control data in a memory. 4,302,083, Cl. 354-23.00D.
Kawamura, Masaharu: *See—*
Suzuki, Ryoichi; Uchiyama, Takashi; Murakami, Hiroyasu; Kawamura, Masaharu; Sakai, Shinji; and Momiyama, Kikuo, 4,302,086, Cl. 354-53.000.
Kawano, Shigeyoshi: *See—*
Kurihara, Nobuo; Nishikawa, Mitsuyo; and Kawano, Shigeyoshi, 4,302,813, Cl. 364-508.000.
Kawasaki Steel Corporation: *See—*
Sato, Akimune; and Tsuchida, Tsuyoshi, 4,301,726, Cl. 101-129.000.
Kawasaki, Takaaki: *See—*
Muraki, Ryoji; Takemura, Shinichiro; Ai, Tetsuo; and Kawasaki, Takaaki, 4,302,205, Cl. 23-232.00R.
Kay, Francis X. Weather sealing strips for doors and windows. 4,302,262, Cl. 156-71.000.
Kays, Jerry W.: *See—*
Wood, Loren E.; Allen, Jerome D.; Clift, Miner E.; Kays, Jerry W.; and Forsythe, Calvin C., 4,301,938, Cl. 220-89.00A.
Kazami, Kazuyuki; Ohtsubo, Yoshiaki; and Kitamura, Yasunori, to Nippon Kogaku K.K. Shutter time adjustment for a flash mode and/or film-leader location. 4,302,085, Cl. 354-32.000.
Kazantsev, Alexandr M.: *See—*
Prouman, Izmail M.; Antonov, Evgeny I.; Barit, Izrail Y.; Andreev, Anatoly V.; and Kazantsev, Alexandr M., 4,302,285, Cl. 376-159.000.
Kearney-National Inc.: *See—*
Osborne, Anthony; and Hanke, Kenneth E., 4,302,646, Cl. 200-153.0SC.
Keckler, Gary D.: *See—*
McElwain, Merle G.; and Keckler, Gary D., 4,301,641, Cl. 53-493.000.
Keeffe, William M.; and Rothwell, Harold L., Jr., to GTE Products Corporation. Low wattage metal halide arc discharge lamp having optimum efficacy. 4,302,699, Cl. 313-229.000.
Keegan, Richard E.: *See—*
Phillips, Barry A.; Spitler, Keith G.; and Keegan, Richard E., 4,302,272, Cl. 156-309.900.
Kehlhofer, Rolf: *See—*
Gubser, Hans-Rudolf; and Kehlhofer, Rolf, 4,301,650, Cl. 60-39.18B.
Keiper Automobiltechnik GmbH & Co. K.G.: *See—*
Esser, Hermann, 4,302,047, Cl. 297-362.000.
KEL-WIN Manufacturing Company, Inc.: *See—*
Keller, Robert J., III, 4,301,830, Cl. 137-454.600.
Keller, Lewis C., to Service Warehouse Company. Pallet. 4,301,743, Cl. 108-53.100.
Keller, Robert J., III, to KEL-WIN Manufacturing Company, Inc. Frictional control of a single lever faucet construction. 4,301,830, Cl. 137-454.600.
Kelley, Mark E., to Sprague Electric Company. Integrated delay circuit with PN-junction capacitor. 4,302,691, Cl. 307-592.000.
Kelly, Frederic J.: *See—*
Alexander, Richard G.; Gilbert, Earl F.; and Kelly, Frederic J., 4,301,960, Cl. 229-30.000.
Kemner, Rudolf; Kuilman, Bernardus G. J.; and Smit, Hilbrand J., to U.S. Philips Corporation. Flare compensation circuit for television. 4,302,777, Cl. 358-160.000.
Kendall Company, The: *See—*
Layton, Terry N., 4,301,811, Cl. 128-748.000.
Layton, Terry N.; and Steigerwald, Carl J., 4,301,812, Cl. 128-761.000.
Merry, Jack D.; and Dunn, William J., 4,301,813, Cl. 128-762.000.
Taylor, Glenn N., 4,302,106, Cl. 356-240.000.
Kennecott Corporation: *See—*
Lai, Ralph W. M., 4,301,973, Cl. 241-20.000.
Rushforth, Calvin, 4,301,857, Cl. 164-416.000.
Kenney Manufacturing Company: *See—*
Comeau, Paul E., 4,301,852, Cl. 160-345.000.
Kenoff, Michael B.: *See—*
Turner, James E., Jr.; and Kenoff, Michael B., 4,302,355, Cl. 252-408.000.
Kent, William H.; and Mitchell, Peter G., to Sperry Corporation. Resonant acoustic transducer system for a well drilling string. 4,302,826, Cl. 367-82.000.
Kenton, Donald J., to Chromalloy American Corporation. Method of improving mechanical properties of alloy parts. 4,302,256, Cl. 148-4.000.
Keritsis, Gus D., to Philip Morris Incorporated. Method for selective denitration of tobacco. 4,301,817, Cl. 131-297.000.
Keritsis, Gus D., to Philip Morris, Inc. Method for electrolytic denitration of tobacco. 4,302,308, Cl. 204-180.00P.
Kernforschungsanlage Julich Gesellschaft mit beschrankter Haftung: *See—*
Golimowski, Jerzy; Sipos, Laszlo; and Valenta, Paul, 4,302,314, Cl. 204-195.00R.
Kerr, Thomas P.; and Kreitler, John K., to PPG Industries, Inc. Sheet transporter. 4,302,042, Cl. 294-67.0AB.
Keunecke, Gerhard: *See—*
Hellmer, Lars; Keunecke, Gerhard; Lell, Rainer; Al-Muddarris, Ghazi R.; Pachaly, Reinhard; Stauffer, Adolf; and Vangala, V. Rao, 4,302,434, Cl. 423-573.00G.
Khvostantsev, Lev G. High pressure producing apparatus. 4,302,168, Cl. 425-77.000.
Kibayashi, Iwao: *See—*
Udagawa, Hideyuki; Ando, Tetsuya; and Kibayashi, Iwao, 4,302,251, Cl. 106-92.000.
Kicherer, Robert; and Schilling, Wilfried, to E.G.O. Regeltechnik GmbH. Control instrument for electric hot plates. 4,302,662, Cl. 219-491.000.
Kidd, Ralph E.: *See—*
Fio Rito, William M.; and Kidd, Ralph E., 4,301,750, Cl. 110-346.000.
Kidwell, Louis E., Jr.; and Holcomb, Dysart E., to Pennzoil Company. Sulfur-based adduct and compositions containing the adduct. 4,302,255, Cl. 106-275.000.
Kiesel, Rolf; and Gaugel, Manfred, to Patent-Treuhand-Gesellschaft fur elektrische Gluhlampen m.b.H. Dual-filament halogen incandescent lamp, particularly sealed-beam, automotive headlight. 4,302,698, Cl. 313-222.000.
Kiesz, Lloyd W. Dolly with vertically adjustable shelf. 4,302,023, Cl. 280-43.240.
Kihara, Keiichi: *See—*
Katsuragawa, Kanzi; Sakka, Hideo; and Kihara, Keiichi, 4,302,306, Cl. 204-158.0HA.
Kihara, Nobuyoshi: *See—*
Mima, Soichiro; Matsushima, Hiroshi; Shimeki, Yasuharu; and Kihara, Nobuyoshi, 4,302,783, Cl. 360-47.000.
Kihara, Utsuo: *See—*
Torii, Michihiro; Goto, Hirohito; and Kihara, Utsuo, 4,302,279, Cl. 156-616.00R.
Kikuma, Seiji: *See—*
Abe, Ryouichi; Sato, Masao; and Kikuma, Seiji, 4,302,247, Cl. 75-122.000.
Kim, Ick W.: *See—*
Gersbach, John E.; Kim, Ick W.; and Zeble, Adolf M., 4,302,823, Cl. 365-190.000.
Kim, Jung S. Ball-point pen having three sides and complementary cap. 4,302,121, Cl. 401-209.000.
Kimball International, Inc.: *See—*
Howell, Stephen L., 4,301,703, Cl. 84-1.010.
Kimchi, Adi: *See—*
Revel, Michel; Kimchi, Adi; Shulman, Lester; and Wallach, David, 4,302,533, Cl. 435-4.000.
Kimura, Kazuo; Fujiwara, Tooru; and Harada, Norio, to Tsubakimoto Chain Co. Toothed belt. 4,302,197, Cl. 474-267.000.
Kimura, Shinji: *See—*
Ishitani, Shigeo; Kimura, Shinji; Takao, Hiroshi; and Uchida, Masaaki, 4,302,312, Cl. 204-195.00S.
Kimura, Yoneko: *See—*
Takei, Yoshiaki; Kimura, Yoneko; and Nomori, Hiroyuki, 4,302,521, Cl. 430-59.000.
Kimura, Yoshimasa: *See—*
Kan, Yasuhito; Kimura, Yoshimasa; Ishida, Masato; Miyamoto, Koichi; and Tohyama, Yoshikuni, 4,302,098, Cl. 355-55.000.
King, John T.: *See—*
Voth, Harold W.; King, John T.; and Guinn, Ronald K., 4,301,647, Cl. 56-504.000.
King, Stella W.: *See—*
Huff, Joel R.; King, Stella W.; and Saari, Walfred S., 4,302,455, Cl. 424-250.000.
Kinoshita, Mikio; and Kutomi, Mitsuhiro, to Kubota, Ltd. Front wheel drive. 4,301,886, Cl. 180-261.000.
Kipchakbaev, Alexandr D.: *See—*
Chernogorenko, Vasily B.; Alzhanov, Tleubai M.; Lynchak, Kima A.; Muchnik, Simon V.; Ishkhanov, Evgeny S.; Sergienko,

Vladimir Y.; Sapian, Vladimir G.; Koverya, Vladimir M.; Pobortsev, Mendel E.; Markovsky, Evgeny A.; Dmitrenko, Valentina V.; Bykov, Vladimir I.; Kipchakbaev, Alexandr D.; and Vopilov, Alexandr N., 4,302,249, Cl. 75-143.000.
Kirchmayer, Hermann. Solar collector. 4,301,786, Cl. 126-417.000.
Kirk, Robley G.: *See*—
Nicholas, John C.; and Kirk, Robley G., 4,302,060, Cl. 308-9.000.
Kirkpatrick, Robert G., to General Electric. Control for gun bolts in a high rate of fire revolving battery gun. 4,301,710, Cl. 89-12.000.
Kitamura, Yasunori: *See*—
Kazami, Kazuyuki; Ohtsubo, Yoshiaki; and Kitamura, Yasunori, 4,302,085, Cl. 354-32.000.
Kitsunai, Minoru: *See*—
Tamaru, Akio; and Kitsunai, Minoru, 4,302,243, Cl. 75-1.00T.
Kiuchi, Masayoshi; Date, Nobuaki; and Saito, Syuichiro, to Canon Kabushiki Kaisha. Antibounce device for electromagnetically driven shutter. 4,302,090, Cl. 354-234.000.
Kivikas, Toivelemb; Rissler, Kaj; Rynell, Dag; and Skoog, Malte, to Alfa-Laval AB. Plate heat exchanger. 4,301,864, Cl. 165-167.000.
Klaiber, Frederick: *See*—
Collis, Herbert M.; and Klaiber, Frederick, 4,302,418, Cl. 264-341.000.
Kleinewefers GmbH: *See*—
Lopata, Karl P., 4,301,665, Cl. 68-5.00E.
Kleinwachter, Jurgen: *See*—
Ritter, Alfred; and Kleinwachter, Jurgen, 4,301,965, Cl. 237-2.00B.
Klempner, Daniel: *See*—
Frisch, Harry L.; Frisch, Kurt C.; and Klempner, Daniel, 4,302,553, Cl. 525-28.000.
Klett, Horst: *See*—
Poth, Leonhard; Hildebrandt, Peter; Pawlik, Rudolf; and Klett, Horst, 4,302,656, Cl. 219-137.0PS.
Klioze, Solomon S.; and Ehrgott, Frederick J., to Hoechst-Roussel Pharmaceuticals, Inc. Intermediates for the preparation of 4-aryloxy-3-phenylpiperidines. 4,302,590, Cl. 546-216.000.
Kluge, Arthur F.; Strosberg, Arthur M.; Whiting, Roger; and Christie, George, to Syntex (U.S.A.) Inc. 2-(1,4-Benzodioxan-2-ylalkyl-)imidazoles useful as antidepressants. 4,302,469, Cl. 424-273.00R.
Knackstedt, Hans-Gunther: *See*—
Ahner, Stefan; Knackstedt, Hans-Gunther; and Strostlik, Peter, 4,302,680, Cl. 250-506.000.
Knape, Richard S.: *See*—
Grundman, Richard G.; and Knape, Richard S., 4,301,777, Cl. 123-379.000.
Knees, Hans. Cooking utensils. 4,301,717, Cl. 99-348.000.
Kobayashi, Akio: *See*—
Ohya, Masaki; Kobayashi, Akio; Ogiwara, Takeo; and Satake, Yoshikatsu, 4,302,558, Cl. 525-218.000.
Kobayashi, Shigeru: *See*—
Hirata, Tadashi; Hashimoto, Yukio; Ogasa, Takehiro; Kobayashi, Shigeru; Sato, Akira; Sato, Kiyoshi; and Takasawa, Seigo, 4,302,540, Cl. 435-119.000.
Kobe Steel, Ltd.: *See*—
Abe, Ryouichi; Sato, Masao; and Kikuma, Seiji, 4,302,247, Cl. 75-122.000.
Kasamatsu, Yutaka; Ishioka, Senri; Yamaga, Makoto; Hirano, Hiromichi; and Ibara, Hitoshi, 4,302,248, Cl. 75-128.00A.
Koch, Karlheinz: *See*—
Giede, Wolfgang; Koch, Karlheinz; Kolaczinski, Gerhard; Rupilius, Wolfgang; and Stein, Werner, 4,302,354, Cl. 252-392.000.
Koda, Hirokazu: *See*—
Suzaki, Kazuo; Koda, Hirokazu; Nakamura, Kenichi; Yoshikawa, Syuieh; and Ohara, Naoki, 4,301,754, Cl. 112-158.00E.
Koga, Keiichiro: *See*—
Morokawa, Shigeru; Sekiya, Fukuo; Hashimoto, Yukio; Nomura, Yasushi; and Koga, Keiichiro, 4,302,828, Cl. 368-69.000.
Morokawa, Shigeru; Sekiya, Fukuo; Hashimoto, Yukio; Nomura, Yasushi; and Koga, Keiichiro, 4,302,829, Cl. 368-82.000.
Kohkoku Chemical Industry Co. Ltd.: *See*—
Hattori, Kenro; Ogawa, Takeshi; Ochiai, Minoru; Tomikawa, Takeshi; and Ikeda, Takeji, 4,302,489, Cl. 427-244.000.
Kohmura, Isao; Iwata, Tamotsu; and Oka, Shozi, to Mitsubishi Paper Mills, Ltd. Materials for silver complex diffusion transfer process. 4,302,526, Cl. 430-227.000.
Kojima, Mitsuo; Aida, Takahiro; and Asami, Yukio, to Nikki Chemical Co., Ltd. Catalyst for production of ethylene from ethanol. 4,302,357, Cl. 252-437.000.
Kolaczinski, Gerhard: *See*—
Giede, Wolfgang; Koch, Karlheinz; Kolaczinski, Gerhard; Rupilius, Wolfgang; and Stein, Werner, 4,302,354, Cl. 252-392.000.
Kolker, Myer: *See*—
Kasevich, Raymond S.; Kolker, Myer; and Dwyer, Arthur S., 4,301,865, Cl. 166-248.000.
Komatsu, Toshiaki: *See*—
Yamada, Hirotada; Nakagome, Takenari; and Komatsu, Toshiaki, 4,302,454, Cl. 424-246.000.
Kombinat Przemyslu Narzedziowego "VIS": *See*—
Chamska, Ludwika; Maciak, Mieczyslaw; Majewski, Stanislaw; Omielczenko, Miroslaw; and Panczyk, Jerzy, 4,302,300, Cl. 204-16.000.
Konishiroku Photo Industry Co., Ltd.: *See*—
Takei, Yoshiaki; Kimura, Yoneko; and Nomori, Hiroyuki, 4,302,521, Cl. 430-59.000.
Kononykhin, Alexei S.: *See*—
Lunev, Evgeny I.; Leonov, Alexandr P.; Kosyreva, Nina P.; Kosyrev, Felix K.; Timofeev, Valery A.; Pekh, Anatoly K.; Kononykhin, Alexei S.; and Artamonov, Alexei V., 4,301,680, Cl. 73-190.0EW.
Konz, Marvin J., to FMC Corporation. Herbicidal isoxazolidine-3,5-diones. 4,302,238, Cl. 71-88.000.
Kooistra, William J., Sr. Marble actuated toy. 4,301,613, Cl. 46-42.000.
Koolatron Industries, Ltd.: *See*—
Reed, Michael A., 4,301,658, Cl. 62-3.000.
Koomey, Inc.: *See*—
Murthy, Rajam R.; and Rice, Billy J., 4,301,827, Cl. 137-207.000.
Koppers Company, Inc.: *See*—
Reabe, Kenneth G.; Dressler, Hans; and Covelli, Frederick M., 4,302,403, Cl. 260-505.00E.
Koreki, Takemasa: *See*—
Fukuma, Daizo; Okamoto, Hisao; Okamoto, Sumio; and Koreki, Takemasa, 4,302,258, Cl. 149-19.100.
Koslow, Evan E.; and Batchelder, J. Samuel, to Koslow Technologies Corporation. Method of promoting water transport through soil. 4,301,620, Cl. 47-58.000.
Koslow Technologies Corporation: *See*—
Koslow, Evan E.; and Batchelder, J. Samuel, 4,301,620, Cl. 47-58.000.
Koss Corporation: *See*—
Jacobsen, Wayno A.; and Thomsen, James P., 4,302,635, Cl. 179-156.00R.
Kosswig, Kurt; and Wienhoefer, Ekkehard, to Chemische Werke Huls, A.G. Adducts of alcohols and olefin oxides, suitable for reducing the interfacial surface tension of oily phases with respect to water. 4,302,349, Cl. 252-174.210.
Kostan, Charles C.: *See*—
Foz, David H.; and Kostan, Charles C., 4,302,638, Cl. 200-19.00R.
Kostron, Gerhard, to Bombardier-Rotex Gesellschaft m.b.H. Motor-assisted bicycle. 4,301,885, Cl. 180-205.000.
Kosyrev, Felix K.: *See*—
Lunev, Evgeny I.; Leonov, Alexandr P.; Kosyreva, Nina P.; Kosyrev, Felix K.; Timofeev, Valery A.; Pekh, Anatoly K.; Kononykhin, Alexei S.; and Artamonov, Alexei V., 4,301,680, Cl. 73-190.0EW.
Kosyreva, Nina P.: *See*—
Lunev, Evgeny I.; Leonov, Alexandr P.; Kosyreva, Nina P.; Kosyrev, Felix K.; Timofeev, Valery A.; Pekh, Anatoly K.; Kononykhin, Alexei S.; and Artamonov, Alexei V., 4,301,680, Cl. 73-190.0EW.
Kotani, Teizo; Nagato, Masaki; and Arai, Kozo, to Japan Synthetic Rubber Co., Ltd. Pressure sensitive conductor. 4,302,361, Cl. 252-503.000.
Kotani, Yasuo: *See*—
Hasegawa, Masayasu; Nishikawa, Hideo; and Kotani, Yasuo, 4,302,467, Cl. 424-270.000.
Koverya, Vladimir M.: *See*—
Chernogorenko, Vasily B.; Alzhanov, Tleubai M.; Lynchak, Kima A.; Muchnik, Simon V.; Ishkhanov, Evgeny S.; Sergienko, Vladimir Y.; Sapian, Vladimir G.; Koverya, Vladimir M.; Pobortsev, Mendel E.; Markovsky, Evgeny A.; Dmitrenko, Valentina V.; Bykov, Vladimir I.; Kipchakbaev, Alexandr D.; and Vopilov, Alexandr N., 4,302,249, Cl. 75-143.000.
Kowitz, Friedrich: *See*—
Lindner, Christian; Ott, Karl-Heinz; Arnold, Bernhard; Kowitz, Friedrich; and Kuhlmann, Dieter, 4,302,378, Cl. 260-31.600.
Kozima, Yasuyuki: *See*—
Ikeda, Takatoshi; Hirano, Shuichi; and Kozima, Yasuyuki, 4,302,781, Cl. 358-288.000.
Kraft, Donald L., to Phillips Petroleum Company. Container closure. 4,301,941, Cl. 220-306.000.
Krall, Albert D.: *See*—
Scarzello, John F.; Lenko, Daniel S.; Krall, Albert D.; Grine, Wayne R.; Brown, Robert E.; Usher, George W.; Mills, Milton K.; and Syeles, Albert M., 4,302,746, Cl. 340-38.00L.
Kramarsky, Nikolai A.: *See*—
Benyaev, Negmat E.; Boskanian, Razmik A.; Yarovenko, Viktor I.; Durbrov, Jury N.; Ustinnikov, Boris A.; Babichenko, Ljudmila V.; Vakulenko, Mikhail D.; Kramarsky, Nikolai A.; Shamrin, Vitaly F.; Karaichev, Sergei I.; Efremov, Boris V.; and Lantsetova, Tatyana N., 4,302,543, Cl. 435-161.000.
Krambrock, Wolfgang; and Eberhard, Nobert, to Waeschle Maschinenfabrik GmbH. Device for pneumatic charging container-type balance. 4,301,880, Cl. 177-189.000.
Krammer, Robert, deceased (by Krammer, Ruth, legal representative), to Sandard Conveyor Company. Accumulating conveyor. 4,301,914, Cl. 198-781.000.
Krammer, Ruth, legal representative: *See*—
Krammer, Robert, deceased, 4,301,914, Cl. 198-781.000.
Kraus, Walter: *See*—
Bohn, Hans; and Kraus, Walter, 4,302,385, Cl. 260-112.00B.
Kreitler, John K., to PPG Industries, Inc. Sheet retainer for a sheet transporter. 4,302,041, Cl. 294-67.0AB.
Kreitler, John K.: *See*—
Kerr, Thomas P.; and Kreitler, John K., 4,302,042, Cl. 294-67.0AB.
Kren, George J.: *See*—
Urbanek, Karel; Kren, George J.; and Wheeler, William R., 4,302,721, Cl. 324-226.000.
Krewson, Walter I., Jr. Thermal signal device with timer. 4,301,661, Cl. 62-130.000.

Kropac, Vaclav: *See*—
Weitemeyer, Christian; Kropac, Vaclav; and Priesch, Manfred, 4,302,512, Cl. 428-447.000.
Kros Konveyors, Inc.: *See*—
Price, Robert, 4,301,910, Cl. 198-304.000.
Krstovic, Alexander P.: *See*—
Grondin, Edward A.; Tulloch, Lawrence R.; Perkins, Martin P., Jr.; Krstovic, Alexander P.; McCoy, Bryon W.; and Morey, Kevin P., 4,301,602, Cl. 34-43.000.
Krueger, William H.: *See*—
Lefebvre, Bernard J.; and Krueger, William H., 4,302,286, Cl. 376-249.000.
Kubota, Ltd.: *See*—
Kinoshita, Mikio; and Kutomi, Mitsuhiro, 4,301,886, Cl. 180-261.000.
Soe, Masao, 4,301,878, Cl. 177-5.000.
Kubota, Seizo: *See*—
Ogawa, Taihei; Kubota, Seizo; Murata, Mineo; and Sekita, Shigeru, 4,302,132, Cl. 405-269.000.
Kubota, Tatsushi: *See*—
Nishimura, Yuji; and Kubota, Tatsushi, 4,302,031, Cl. 280-804.000.
Kuckhermann, Gustav, to Icoma Packtechnik GmbH. Filling station for pleat-sided bags. 4,301,842, Cl. 141-114.000.
Kuhl Corporation: *See*—
Kuhl, Henry Y.; and Kuhl, Paul R., 4,302,142, Cl. 414-120.000.
Kuhl, Henry Y.; and Kuhl, Paul R., to Kuhl Corporation. Apparatus for automatically loading eggs directly from stacks of egg-filled flats. 4,302,142, Cl. 414-120.000.
Kuhl, Paul R.: *See*—
Kuhl, Henry Y.; and Kuhl, Paul R., 4,302,142, Cl. 414-120.000.
Kuhlmann, Dieter: *See*—
Lindner, Christian; Ott, Karl-Heinz; Arnold, Bernhard; Kowitz, Friedrich; and Kuhlmann, Dieter, 4,302,378, Cl. 260-31.600.
Kuilman, Bernardus G. J.: *See*—
Kemner, Rudolf; Kuilman, Bernardus G. J.; and Smit, Hilbrand J., 4,302,777, Cl. 358-160.000.
Kukolja, Stjepan; and Pfeil, Janice L., to Eli Lilly and Company. Unsymmetrical azetidinone aldehyde disulfides and process. 4,302,391, Cl. 260-239.00A.
Kupperman, Dennis: *See*—
Kupperman, Sam; and Kupperman, Dennis, 4,301,942, Cl. 220-444.000.
Kupperman, Sam; and Kupperman, Dennis, to RB Products Corporation. Insulated container. 4,301,942, Cl. 220-444.000.
Kuraray Co., Ltd.: *See*—
Handa, Hajime; Yonekawa, Yasuhiro; Yamagata, Sen; Taki, Waro; Ikada, Yoshito; and Iwata, Hiroo, 4,301,803, Cl. 128-349.00B.
Omura, Ikuo; Yamauchi, Junichi; Nagase, Yoshinori; and Shibatani, Kyoichiro, 4,302,381, Cl. 260-42.150.
Kurashiki Boseki Kabushiki Kaisha: *See*—
Muraki, Ryoji; Takemura, Shinichiro; Ai, Tetsuo; and Kawasaki, Takaaki, 4,302,205, Cl. 23-232.00R.
Kureha Kagaku Kogyo Kabushiki Kaisha: *See*—
Endo, Hiroyuki; Ohhira, Hirosi; and Sasaki, Tohru, 4,302,556, Cl. 525-199.000.
Ohya, Masaki; Kobayashi, Akio; Ogiwara, Takeo; and Satake, Yoshikatsu, 4,302,558, Cl. 525-218.000.
Kurihara, Nobuo; Nishikawa, Mitsuyo; and Kawano, Shigeyoshi, to Hitachi, Ltd. Method of controlling operation of rotary machines by diagnosing abnormal conditions. 4,302,813, Cl. 364-508.000.
Kurihara, Toshio: *See*—
Yasunaga, Makoto; and Kurihara, Toshio, 4,302,115, Cl. 400-124.000.
Kusters, Eduard: *See*—
Liessen, Karl-Heinz; and Janssen, Erwin, 4,301,721, Cl. 100-170.000.
Kuszewski, James R.: *See*—
Mandella, William L.; and Kuszewski, James R., 4,302,524, Cl. 430-155.000.
Kutnyak, Thomas A., to Automation Industries, Inc. Method for making high pressure hose. 4,302,266, Cl. 156-149.000.
Kutomi, Mitsuhiro: *See*—
Kinoshita, Mikio; and Kutomi, Mitsuhiro, 4,301,886, Cl. 180-261.000.
Kuwazuru, Yasumitsu: *See*—
Ueda, Hiroshi; Shimazaki, Masao; and Kuwazuru, Yasumitsu, 4,302,379, Cl. 260-38.000.
Kyber Engineering, Inc.: *See*—
Marez, Alejandro; and Spykerman, Jon J., 4,302,805, Cl. 363-91.000.
Kyowa Hakko Kogyo Co., Ltd.: *See*—
Hirata, Tadashi; Hashimoto, Yukio; Ogasa, Takehiro; Kobayashi, Shigeru; Sato, Akira; Sato, Kiyoshi; and Takasawa, Seigo, 4,302,540, Cl. 435-119.000.
Hirata, Tadashi; Hashimoto, Yukio; Matsukuma, Ikuo; Yoshiie, Shigeo; and Takasawa, Seigo, 4,302,541, Cl. 435-119.000.
L.C.R.D. Corp.: *See*—
Ligouri, Thomas A., 4,302,120, Cl. 401-198.000.
La Telemecanique Electrique: *See*—
Arvisenet, Jacques, 4,302,644, Cl. 200-147.00R.
Labedz, Gerald P., to Motorola, Inc. Digital Pseudo continuous tone detector. 4,302,817, Cl. 364-724.000.
Laborec Laboratoire de Recherches Biologiques: *See*—
Chazerain, Jacques A.; Cotereau, Hubert Y.; Lallouette, Pierre H.; Legger, Hugues A.; and Lepape, Pierre A. C., 4,302,458, Cl. 424-258.000.
Labovitz, Jeffrey N., to Zoecon Corporation. Process for the preparation of oximinonitriles. 4,302,402, Cl. 260-465.00E.
LaCoste, Bernard L., to Westinghouse Electric Corp. Ocean thermal energy conversion system. 4,302,682, Cl. 290-1.00R.
LaFlame, Frank E., to General Motors Corporation. Electro-viscous fan clutch assembly. 4,302,156, Cl. 416-169.00A.
Lager, Jean-Paul: *See*—
Bouvier d'Ivoire, Jean-Baptiste B. F.; Cauhape, Michel J. B.; and Lager, Jean-Paul, 4,302,836, Cl. 370-13.000.
Lai, Juey H., to Honeywell Inc. Process for developing a positive electron resist. 4,302,529, Cl. 430-296.000.
Lai, Ralph W. M., to Kennecott Corporation. Beneficiation of iron ore. 4,301,973, Cl. 241-20.000.
Laidlaw, Drew & Co. Ltd.: *See*—
Pont, Richard S., 4,302,179, Cl. 431-189.000.
Lake, Connie, to Creative Industries, Inc. Method of forming foam articles from a foam thermoplastic web. 4,302,415, Cl. 264-138.000.
Lallouette, Pierre H.: *See*—
Chazerain, Jacques A.; Cotereau, Hubert Y.; Lallouette, Pierre H.; Legger, Hugues A.; and Lepape, Pierre A. C., 4,302,458, Cl. 424-258.000.
LaMattina, John L.; and Lipinski, Christopher A., to Pfizer Inc. Imidazolylpyridine therapeutic agents. 4,302,464, Cl. 424-263.000.
Landa, Benzion, to Savin Corporation. Combined transfer and registration system for electrophotographic copier. 4,302,093, Cl. 355-3.0TR.
Landler, Josef, to Hoechst Aktiengesellschaft. Process for the manufacture of pigment preparations. 4,302,254, Cl. 106-272.000.
Lanizzani, Charles E.: *See*—
Yuhash, Ladd; and Lanizzani, Charles E., 4,301,737, Cl. 102-518.000.
Lanni, Christopher P.: *See*—
Edwards, David, Jr.; and Lanni, Christopher P., 4,302,679, Cl. 250-489.000.
Lansbury, Robert C.; and Heggs, Thomas G., to Imperial Chemical Industries Limited. Film-forming composition. 4,302,504, Cl. 428-332.000.
Lantsetova, Tatyana N.: *See*—
Benyaev, Negmat E.; Boskanian, Razmik A.; Yarovenko, Viktor I.; Durbrov, Jury N.; Ustinnikov, Boris A.; Babichenko, Ljudmila V.; Vakulenko, Mikhail D.; Kramarsky, Nikolai A.; Shamrin, Vitaly F.; Karaichev, Sergei I.; Efremov, Boris V.; and Lantsetova, Tatyana N., 4,302,543, Cl. 435-161.000.
Lapinski, Richard, to Catuma Pty, Limited. Fishing line caster. 4,301,611, Cl. 43-18.00R.
Lard, Charles W. Device for improving physical fitness. 4,302,008, Cl. 272-117.000.
Lareau, Richard G., executor: *See*—
Cornelius, Richard T., deceased; and Lareau, Richard G., executor, 4,301,971, Cl. 239-351.000.
Largeteau, Pierre A., to S.A. Automobiles Citroen; and Societe Automobiles Peugeot. Grinding heads. 4,301,624, Cl. 51-34.00J.
Larinoff, Michael W., to Hudson Products Corporation. Steam condensing apparatus. 4,301,861, Cl. 165-110.000.
Larson, Edwin G.; Haigh, Daniel H.; and Hall, Richard H., to Dow Chemical Company, The. Separation of oil from water. 4,302,337, Cl. 210-662.000.
Laser-Scan Laboratories Limited: *See*—
Woodsford, Peter A.; and Ewen-Smith, Beverley M., 4,302,681, Cl. 250-556.000.
Last, Anthony J.; and McAndless, John M., to Canada, Her Majesty the Queen in right of, as represented by the Minister of National Defence. Fabric treatment with ultrasound. 4,302,485, Cl. 427-57.000.
Latapie, Jean-Francois, to Equipements Automobiles Marchal. Electronic ignition device. 4,301,778, Cl. 123-426.000.
Latos, Edward L.; and Moneymaker, Elton G., to General Electric Company. Reflector unit for photoflash array. 4,301,924, Cl. 206-520.000.
Laufer, Shlomo, to Tadiran Israel Electronics Industries Ltd. Wideband vertical doublet antenna. 4,302,760, Cl. 343-715.000.
Laufhutte, Dieter: *See*—
Weber, Heinrich; and Laufhutte, Dieter, 4,302,430, Cl. 423-234.000.
Laugerud, Sverre; Etnestad, Herman; and Pedersen, Frode, to O. Mustad & Don A/S. Arrangement in fluidized bed incinerator. 4,301,748, Cl. 110-245.000.
Lavalle, Pierre A.: *See*—
Gunning, William F.; and Lavalle, Pierre A., 4,302,782, Cl. 358-296.000.
Lavanish, Jerome M., to PPG Industries, Inc. 3-(5- or 3-Substituted-5- or 3-isoxazolyl)-1-allyl or alkyl-4-substituted-5-substituted or unsubstituted-2-imidazolidinones for controlling weeds. 4,302,239, Cl. 71-88.000.
Lawes, Bernard C.; and Watts, John C., to Du Pont de Nemours, E. I., and Company. Process for solution mining of uranium ores. 4,302,429, Cl. 423-17.000.
Layton, Terry N., to Kendall Company, The. Cystometry system. 4,301,811, Cl. 128-748.000.
Layton, Terry N.; and Steigerwald, Carl J., to Kendall Company, The. Midstream sampling device. 4,301,812, Cl. 128-761.000.
Lazar, Raymond J. Water jet cleaning device. 4,302,040, Cl. 294-19.00R.
Lazazzero, Esther. Purse holder. 4,302,046, Cl. 297-191.000.
Le Materiel Telephonique Thomson-CSF: *See*—
Bouvier d'Ivoire, Jean-Baptiste B. F.; Cauhape, Michel J. B.; and Lager, Jean-Paul, 4,302,836, Cl. 370-13.000.
Leay, John, to Imero Fiorentino Associates, Inc. Lens previewer. 4,301,599, Cl. 33-277.000.

Leclercq, Joseph, to Framatome. Nuclear reactor fuel assemblies. 4,302,294, Cl. 376-446.000.
Le Coent, Jean-Louis: *See—*
Demoures, Bernard; and Le Coent, Jean-Louis, 4,302,342, Cl. 252-33.200.
Lee, Horace G.: *See—*
Ashton, George W.; Manning, Peter; and Lee, Horace G., 4,302,092, Cl. 354-307.000.
Leeb, Richard: *See—*
Bickel, Martin; Geiger, Rolf; Leeb, Richard; and Petri, Walter, 4,302,448, Cl. 424-177.000.
Leesona Corporation: *See—*
Hogseth, Steven W.; Loff, Carl W.; and White, Dean J., 4,302,172, Cl. 425-154.000.
Lefebvre, Bernard J.; and Krueger, William H., to Westinghouse Electric Corp. Reactor vessel in-service inspection assembly and ultrasonic centering device. 4,302,286, Cl. 376-249.000.
Leger, Violeta Z.: *See—*
Evans, William P.; and Leger, Violeta Z., 4,302,520, Cl. 429-194.000.
Legger, Hugues A.: *See—*
Chazerain, Jacques A.; Cotereau, Hubert Y.; Lallouette, Pierre H.; Legger, Hugues A.; and Lepape, Pierre A. C., 4,302,458, Cl. 424-258.000.
Leiter, Herbert: *See—*
Reinheimer, Guter; and Leiter, Herbert, 4,302,087, Cl. 354-79.000.
Leland Stanford Junior University, The Board of Trustees of: *See—*
Wahl, Geoffrey M.; and Stark, George R., 4,302,204, Cl. 23-230.300.
Lell, Rainer: *See—*
Hellmer, Lars; Keunecke, Gerhard; Lell, Rainer; Al-Muddarris, Ghazi R.; Pachaly, Reinhard; Stauffer, Adolf; and Vangala, V. Rao, 4,302,434, Cl. 423-573.00G.
Lemaire, Jean C.: *See—*
Akrich, Charles; Lemaire, Jean C.; Maillard, Michel J.; and Ruiz, Michel, 4,302,628, Cl. 179-1.50S.
Le Mer, Joseph. Fuel burner. 4,302,180, Cl. 431-218.000.
Lemke, James U., to Eastman Kodak Company. Magnetic recording head with effective magnetic gap length less than about 15μ inches. 4,302,790, Cl. 360-119.000.
Lenko, Daniel S.: *See—*
Scarzello, John F.; Lenko, Daniel S.; Krall, Albert D.; Grine, Wayne R.; Brown, Robert E.; Usher, George W.; Mills, Milton K.; and Syeles, Albert M., 4,302,746, Cl. 340-38.00L.
Leon, Albert M.: *See—*
Jukkola, Walfred W.; Leon, Albert M.; Van Dyk, Garritt C., Jr.; McCoy, Daniel E.; Fisher, Barry L.; Saiers, Timothy L.; and Karstetter, Marlin E., 4,301,771, Cl. 122-4.00D.
Leonov, Alexandr P.: *See—*
Lunev, Evgeny I.; Leonov, Alexandr P.; Kosyreva, Nina P.; Kosyrev, Felix K.; Timofeev, Valery A.; Pekh, Anatoly K.; Kononykbin, Alexei S.; and Artamonov, Alexei V., 4,301,680, Cl. 73-190.0EW.
Lepape, Pierre A. C.: *See—*
Chazerain, Jacques A.; Cotereau, Hubert Y.; Lallouette, Pierre H.; Legger, Hugues A.; and Lepape, Pierre A. C., 4,302,458, Cl. 424-258.000.
Les Cables de Lyon S.A.: *See—*
Bendayan, Jacques; and Jocteur, Robert, 4,302,073, Cl. 350-96.230.
Lesher, George Y.: *See—*
Collins, Joseph C.; Lesher, George Y.; and Singh, Baldev, 4,302,462, Cl. 424-263.000.
Lestradet, Maurice C. J. Spreader devices having a controlled output. 4,301,944, Cl. 222-55.000.
Leupold, Ernst I.: *See—*
Baltes, Herbert; and Leupold, Ernst I., 4,302,609, Cl. 568-471.000.
Leusner, Bernhard: *See—*
Walkowiak, Michael; Podszun, Wolfgang; Leusner, Bernhard; Suling, Carlhans; and Schulz, Hans H., 4,302,376, Cl. 260-29.7UA.
Levenberg, Nat. Adjustable flue control for furnaces. 4,301,785, Cl. 126-292.000.
Levin, Menahm; and Nebenzahl, Isaiah. Isotope separation. 4,302,676, Cl. 250-423.00P.
Levitt, George, to Du Pont de Nemours, E. I., and Company. Agricultural sulfonamides. 4,302,241, Cl. 71-92.000.
Lewinger, Nathan; and Bhowmik, Santi R., to Pennant Products, Inc. Rotary retort. 4,301,718, Cl. 99-359.000.
Lewis, Anthony: *See—*
Humphrey, Anthony M.; and Lewis, Anthony, 4,302,479, Cl. 426-600.000.
Lewis, Arlin C. Water gas electrolyzer apparatus. 4,302,320, Cl. 204-278.000.
Lewis, Merle J.; and Marruffo, Benito F., to General Electric Company. Timer device, assembly, and method of operating. 4,302,639, Cl. 200-38.00R.
Lewis, Robert A., to Chevron Research Company. Deposit control additives and their fuel compositions. 4,302,215, Cl. 44-71.000.
Lezcano, Miguel R. Fuel compositions containing alcohol and saponified fatty material and method of preparing same. 4,302,213, Cl. 44-56.000.
Li, Tao P., to Monsanto Co. Conversion of ethyl chloride to vinyl chloride. 4,302,617, Cl. 570-230.000.
Liautaud, Jacques C.: *See—*
Pla, Jean F.; and Liautaud, Jacques C., 4,302,445, Cl. 424-101.000.
Libbey-Owens-Ford Company: *See—*
Mattimoe, Paul T., 4,302,503, Cl. 428-323.000.
Liber, Howard L.: *See—*
Skopek, Thomas R.; Liber, Howard L.; Penman, Bruce W.; Thilly, William G.; and Hoppe, Henry, IV, 4,302,535, Cl. 435-6.000.
Licentia Patent-Verwaltungs-G.m.b.H.: *See—*
Frank, Werner, 4,302,000, Cl. 271-150.000.
Mattfeld, Johann, 4,302,719, Cl. 323-316.000.
Lienhard, Heinz: *See—*
Vonlanthen, Alfred; and Lienhard, Heinz, 4,301,711, Cl. 89-33.0BB.
Liepert, Rudolf, to Georg Spiess GmbH. Device for forming a sequence of underlapping sheets. 4,302,001, Cl. 271-183.000.
Liessen, Karl-Heinz; and Janssen, Erwin, to Kusters, Eduard. Roll-journal bearing mounting. 4,301,721, Cl. 100-170.000.
Light, Steven D.: *See—*
Simpson, Howard D.; Gowdy, Hugh W.; and Light, Steven D., 4,302,219, Cl. 48-213.000.
Ligouri, Thomas A., to L.C.R.D. Corp. Nib assembly. 4,302,120, Cl. 401-198.000.
Lillie, Charles R., to TRW Inc. Rotary cutting tool. 4,302,135, Cl. 408-59.000.
Lin, Hung Chang. Method of fabricating semiconductor junction device employing separate metallization. 4,301,592, Cl. 29-590.000.
Lindberg, John E. Method and apparatus for improving engine operation and reducing hydrocarbons emissions therefrom by cooling the fuel supplied to or in the carburetor. 4,301,781, Cl. 123-541.000.
Linde Aktiengesellschaft: *See—*
Poth, Leonhard; Hildebrandt, Peter; Pawlik, Rudolf; and Klett, Horst, 4,302,656, Cl. 219-137.0PS.
Lindgren, Per; and Helmersson, Sture, to AB ASEA-Atom. Method of exchanging fuel in a nuclear reactor. 4,302,289, Cl. 376-267.000.
Lindner, Christian; Ott, Karl-Heinz; Arnold, Bernhard; Kowitz, Friedrich; and Kuhlmann, Dieter, to Bayer Aktiengesellschaft. ABS-Moulding compositions having high notched impact strength. 4,302,378, Cl. 260-31.600.
Lindsey, L. E., to Lindsey Manufacturing Co. Bundle conductor stringing block. 4,301,994, Cl. 254-134.3PA.
Lindsey Manufacturing Co.: *See—*
Lindsey, L. E., 4,301,994, Cl. 254-134.3PA.
Linke, Hans-Ralf: *See—*
Gundermann, Karl-Dietrich; Wulff, Karl; Staehler, Fritz; and Linke, Hans-Ralf, 4,302,537, Cl. 435-7.000.
Linker, Karl-Heinz: *See—*
Findeisen, Kurt; and Linker, Karl-Heinz, 4,302,583, Cl. 544-176.000.
Lipinski, Christopher A.: *See—*
LaMattina, John L.; and Lipinski, Christopher A., 4,302,464, Cl. 424-263.000.
Lipman Electric Company, Inc.: *See—*
Springston, Jefferson J., 4,302,162, Cl. 417-424.000.
Lister, Jerry D., to Adver-Togs, Inc. Method of producing glow printing. 4,302,487, Cl. 427-157.000.
Lithibar Company, The: *See—*
Donnelly, Bernard P.; and VanSlooten, Roland W., 4,302,140, Cl. 414-46.000.
Litovitz, Theodore Aaron: *See—*
Macedo, Pedro B.; Simmons, Joseph H.; and Murai, Shigeo, 4,302,231, Cl. 65-3.150.
Littler, Laurence L.: *See—*
Deem, William C.; Esposito, Robert; Littler, Laurence L.; and Sullivan, Robert S., 4,302,004, Cl. 272-29.000.
Litvinenko, Leonid A.: *See—*
Redikultsev, Jury V.; Litvinenko, Leonid A.; and Sedov, Valery A., 4,302,545, Cl. 435-289.000.
Litwack, Zita; Hoberman, Barry W.; and Najman, Emil R., to Novogrodsky, Joseph. Reversible bag. 4,301,849, Cl. 150-33.000.
Livigni, Russell A.: *See—*
Bingham, Robert E.; Durst, Richard R.; Fabris, Hubert J.; Hargis, Ivan G.; Livigni, Russell A.; and Aggarwal, Sundar L., 4,302,568, Cl. 526-187.000.
Locatelli, Jean-Louis; and Robin, Jean, to Rhone-Poulenc Industries. Polyisocyanatoimido compositions and imide group containing polymers prepared therefrom. 4,302,572, Cl. 528-73.000.
Lockwood, Hanford N., Jr.; Siegert, Louis D.; and Brock, Steven B., to Coen Company, Inc. High temperature furnace with improved slag tap. 4,301,747, Cl. 110-171.000.
Lodewick, Rainer: *See—*
Gosset, Pierrette; and Lodewick, Rainer, 4,302,364, Cl. 252-545.000.
Loev, Bernard: *See—*
Shroff, James R.; and Loev, Bernard, 4,302,591, Cl. 546-257.000.
Loewenstern, Kenneth M.: *See—*
Maltby, Frederick L.; Loewenstern, Kenneth M.; and Benning, Jack G., Jr., 4,301,681, Cl. 73-304.00C.
Loff, Carl W.: *See—*
Hogseth, Steven W.; Loff, Carl W.; and White, Dean J., 4,302,172, Cl. 425-154.000.
Lohse, Friedrich: *See—*
Stockinger, Friedrich; Eldin, Sameer H.; and Lohse, Friedrich, 4,302,573, Cl. 528-89.000.
London, James T., to Wright Manufacturing Company. Endoprosthetic joint device. 4,301,552, Cl. 3-1.910.
Longenecker, Robert W. Colorimetric immunoassay process. 4,302,536, Cl. 435-7.000.

Longshore, Randolph E.: *See—*
Cox, John T.; Garber, Michael B.; Jasper, Marilyn A.; and Longshore, Randolph E., 4,302,531, Cl. 430-317.000.
Lonnebring, Arne, to Imo-Industri AB. Interengaging screw machine with radial inlet and/or outlet bore. 4,302,165, Cl. 418-197.000.
Lopata, Karl P., to Kleinewefers GmbH. Sealing arrangement. 4,301,665, Cl. 68-5.00E.
Lopatin, George: *See—*
Coplan, Myron J.; and Lopatin, George, 4,302,509, Cl. 428-398.000.
Lord Corporation: *See—*
Zalas, John M., 4,301,890, Cl. 181-286.000.
Lord, Thomas J., to United Aircraft Products, Inc. Pressure regulating valve with differential pressure response. 4,301,831, Cl. 137-489.500.
Lorentz, Guido: *See—*
Hesse, Wolfgang; Lorentz, Guido; and Rauhut, Klaus, 4,302,380, Cl. 260-38.000.
Losenhausen Maschinenbau AG: *See—*
Arenz, Bruno, 4,302,129, Cl. 404-117.000.
Lowe, Arthur T.; and Hosford, Charles D., to United States of America, Energy. Sputter coating of microspherical substrates by levitation. 4,302,311, Cl. 204-192.00R.
Lowe, Colin F. Frameless metal building and building components. 4,301,628, Cl. 52-90.000.
Lowe, Orville G. Intermolecular compounds of amino acids and sulfoxides and method of preparing same. 4,302,593, Cl. 549-29.000.
Lowi, Alvin, Jr. Cellulose fiber insulation plant and process. 4,302,488, Cl. 427-212.000.
Lucas Industries Limited: *See—*
McCulloch, James M., 4,302,841, Cl. 371-70.000.
Luers, George A., to Corning Glass Works. Producing a multi-color image in polychromatic glass. 4,302,235, Cl. 65-30.110.
Lunev, Evgeny I.; Leonov, Alexandr P.; Kosyreva, Nina P.; Kosyrev, Felix K.; Timofeev, Valery A.; Pekh, Anatoly K.; Kononykhin, Alexei S.; and Artamonov, Alexei V. Apparatus and system for measuring power of heat radiation. 4,301,680, Cl. 73-190.0EW.
Lunt, James W., to Paul Masson, Inc. Sulfur dioxide addition to must. 4,302,476, Cl. 426-231.000.
Luria, Steven R. Rigid shelf connector. 4,301,636, Cl. 52-584.000.
Lynch, Gary J.: *See—*
Dyroff, David R.; Lynch, Gary J.; and Papanu, Victor D., 4,302,564, Cl. 525-398.000.
Lynchak, Kima A.: *See—*
Chernogorenko, Vasily B.; Alzhanov, Tleubai M.; Lynchak, Kima A.; Muchnik, Simon V.; Ishkhanov, Evgeny S.; Sergienko, Vladimir Y.; Sapian, Vladimir G.; Koverya, Vladimir M.; Pobortsev, Mendel E.; Markovsky, Evgeny A.; Dmitrenko, Valentina V.; Bykov, Vladimir I.; Kipchakbaev, Alexandr D.; and Vopilov, Alexandr N., 4,302,249, Cl. 75-143.000.
M. W. Kellogg Company, The: *See—*
Fankhanel, Martin O.; and Roosov, Alfred K., 4,302,177, Cl. 431-11.000.
MacChesney, John B.; Simpson, Jay R.; and Walker, Kenneth L., to Bell Telephone Laboratories, Incorporated. High rate optical fiber fabrication process using thermophoretically enhanced particle deposition. 4,302,230, Cl. 65-3.120.
Maccianti, Tiziano: *See—*
Zanchi, Vittorio; and Maccianti, Tiziano, 4,302,808, Cl. 364-200.000.
Macedo, Pedro B.; Simmons, Joseph H.; and Murai, Shigeo, to De Macedo, Pedro Manoel Buarque; and Litovitz, Theodore Aaron. Method of producing a glass article having a graded refractive index profile of a parabolic nature. 4,302,231, Cl. 65-3.150.
Maciak, Mieczyslaw: *See—*
Chamska, Ludwika; Maciak, Mieczyslaw; Majewski, Stanislaw; Omielczenko, Miroslaw; and Panczyk, Jerzy, 4,302,300, Cl. 204-16.000.
Mack, John C., to Boeing Company, The. Integrated transmission and rotor head. 4,302,154, Cl. 416-114.000.
MacKinnon, Hugh S., to Chevron Research Company. Erosion-inhibited functional fluid. 4,302,346, Cl. 252-75.000.
Maffeis, Flavio; and Franchino, Fulvio, to Industrie Pirelli S.p.A. Apparatus for curing power transmission belts. 4,302,167, Cl. 425-28.00B.
Magee, James H.; and Tauber, Thomas E., to Technical Development Co. Wear particle disintegrator monitor. 4,302,754, Cl. 340-631.000.
Magnaflux Corporation: *See—*
Schiffert, Phillip W., 4,302,678, Cl. 250-461.00R.
Magnavox Consumer Electronics Company: *See—*
Streeter, Robert D., 4,302,626, Cl. 179-1.5GS.
Magnetic Peripherals Inc.: *See—*
Vos, Leroy A., 4,302,789, Cl. 360-105.000.
Maier, Alfred E.; Ricci, Louis N.; and Haugh, Charles E., to Westinghouse Electric Corp. Circuit breaker mechanism. 4,302,740, Cl. 335-21.000.
Maillard, Michel J.: *See—*
Akrich, Charles; Lemaire, Jean C.; Maillard, Michel J.; and Ruiz, Michel, 4,302,628, Cl. 179-1.50S.
Maistrelli, Roger: *See—*
Carre, Jean C.; and Maistrelli, Roger, 4,301,870, Cl. 172-7.000.
Majewski, Stanislaw: *See—*
Chamska, Ludwika; Maciak, Mieczyslaw; Majewski, Stanislaw; Omielczenko, Miroslaw; and Panczyk, Jerzy, 4,302,300, Cl. 204-16.000.
Majima, Keichiro. Pile or sheet-pile driver. 4,301,874, Cl. 173-152.000.
Malish, Elton K. Material handling implement particularly suited for transporting round hay bales. 4,302,139, Cl. 414-24.500.
Mallory, William R.: *See—*
Morrison, Robert W., Jr.; Mallory, William R.; and Styles, Virgil L., 4,302,587, Cl. 544-320.000.
Mallya, Prakish: *See—*
Barabas, Eugene S.; Mallya, Prakish; and Gromelski, Stanley J., 4,302,606, Cl. 568-333.000.
Maltby, Frederick L.; Loewenstern, Kenneth M.; and Benning, Jack G., Jr., to Drexelbrook Controls, Inc. Method of using capacitor probe with a semiconductive electrode. 4,301,681, Cl. 73-304.00C.
Manara, Giovanni; Fattore, Vittorio; and Notari, Bruno, to Snamprogetti, S.p.A. Method for the hydration of acrylonitrile to acrylamide. 4,302,597, Cl. 564-127.000.
Mandella, William L.; and Kuszewski, James R., to GAF Corporation. Vesicular film elements. 4,302,524, Cl. 430-155.000.
Manella, Paul, to Doltron AG. Peristaltic pump with means compressing its tube in two directions. 4,302,164, Cl. 417-474.000.
Mann, James A., Jr.: *See—*
Higgins, Bobby L.; and Mann, James A., Jr., 4,301,999, Cl. 269-21.000.
Manning, Peter: *See—*
Ashton, George W.; Manning, Peter; and Lee, Horace G., 4,302,092, Cl. 354-307.000.
Marantz, Daniel R.: *See—*
Altorfer, Kenneth J.; and Marantz, Daniel R., 4,302,483, Cl. 427-37.000.
Marathon Oil Company: *See—*
Sydansk, Robert D.; Gucwa, Paul R.; and Stonecipher, Sharon A., 4,301,867, Cl. 166-292.000.
Marconi Company Limited, The: *See—*
Davies, George G., 4,302,109, Cl. 356-375.000.
Marez, Alejandro; and Spykerman, Jon J., to Kyber Engineering, Inc. Power supply utilizing a high frequency magnetic amplifier. 4,302,805, Cl. 363-91.000.
Markovsky, Evgeny A.: *See—*
Chernogorenko, Vasily B.; Alzhanov, Tleubai M.; Lynchak, Kima A.; Muchnik, Simon V.; Ishkhanov, Evgeny S.; Sergienko, Vladimir Y.; Sapian, Vladimir G.; Koverya, Vladimir M.; Pobortsev, Mendel E.; Markovsky, Evgeny A.; Dmitrenko, Valentina V.; Bykov, Vladimir I.; Kipchakbaev, Alexandr D.; and Vopilov, Alexandr N., 4,302,249, Cl. 75-143.000.
Marra, Joseph V., to Hercules Incorporated. Nonwoven fabric of netting and thermoplastic polymeric microfibers. 4,302,495, Cl. 428-110.000.
Marruffo, Benito F.: *See—*
Lewis, Merle J.; and Marruffo, Benito F., 4,302,639, Cl. 200-38.00R.
Marshall, Albert H.: *See—*
Shaw, Bon F.; and Marshall, Albert H., 4,302,190, Cl. 434-18.000.
Martin, Andrew C., to Black Clawson Company, The. Center flow screening apparatus. 4,302,327, Cl. 209-240.000.
Martin, Timothy J., Jr. Protective cover device. 4,301,828, Cl. 137-381.000.
Martin, Walter H.; Briley, George C.; and Pao, Peter Y. M., to Refrigeration Engineering Corporation. Fluidized freezing. 4,301,659, Cl. 62-57.000.
Maruta, Fumio: *See—*
Umeki, Shinji; Onuki, Kazuaki; and Maruta, Fumio, 4,302,510, Cl. 428-403.000.
Marwil, Stanley J., to Phillips Petroleum Company. Increasing the life of a supported ruthenium catalyst in the hydrogenation of an olefinically unsaturated dinitrile. 4,302,604, Cl. 564-491.000.
Marx, Matthias: *See—*
Horn, Peter; Hesse, Anton; Weyland, Peter; Straehle, Wolfgang; and Marx, Matthias, 4,302,551, Cl. 521-163.000.
Maschinenfabrik Carl Zangs Aktiengesellschaft: *See—*
Brock, Josef; and Surkamp, Paul, 4,301,905, Cl. 192-71.000.
Teetz, Wolfgang; and Desprez, Alfred, 4,301,756, Cl. 112-221.000.
Mason, Charles D.: *See—*
Tuller, Harold W.; Schulze, Stephen R.; and Mason, Charles D., 4,302,511, Cl. 428-412.000.
Massachusetts Institute of Technology: *See—*
Skopek, Thomas R.; Liber, Howard L.; Penman, Bruce W.; Thilly, William G.; and Hoppe, Henry, IV, 4,302,535, Cl. 435-6.000.
Massey-Ferguson Services N.V.: *See—*
Bailey, Alfred J.; Dean, Malcolm; and Bruce, Norman J. A., 4,301,643, Cl. 56-13.600.
Másui, Takeshi: *See—*
Nabeta, Takeshi; Masui, Takeshi; and Hasegawa, Tsuguo, 4,302,554, Cl. 525-71.000.
Mata, Justo M.: *See—*
Stapley, Edward O.; and Mata, Justo M., 4,302,578, Cl. 542-427.000.
Matalia, Harshad: *See—*
Jaffe, Erwin; Matalia, Harshad; Rinehart, William D.; Warner, Frederick L.; Navi, Menashe; and Merker, George, 4,301,728, Cl. 101-220.000.
Matsuki, Masashi: *See—*
Fukuda, Syozi; Munakata, Teruo; and Matsuki, Masashi, 4,301,908, Cl. 192-109.00F.
Matsukuma, Ikuo: *See—*
Hirata, Tadashi; Hashimoto, Yukio; Matsukuma, Ikuo; Yoshiie, Shigeo; and Takasawa, Seigo, 4,302,541, Cl. 435-119.000.
Matsumoto, Fumio; Harase, Jirou; Takashima, Kunihide; and Nakayama, Hisanobu, to Nippon Steel Corporation. Process for producing a grain-oriented silicon steel sheet. 4,302,257, Cl. 148-111.000.

Matsumoto, Hisayuki; Niimi, Uneho; and Obata, Shuichi, to Matsushita Electric Industrial Co., Ltd. Rotational speed signal sensor. 4,302,692, Cl. 310-113.000.
Matsumoto, Kazuhiro: See—
 Atsukawa, Masumi; Matsumoto, Kazuhiro; Seto, Toru; Sera, Toshikuni; and Ukawa, Naohiko, 4,302,431, Cl. 423-239.000.
Matsumoto, Kazuya; and Matsumura, Susumu, to Canon Kabushiki Kaisha. Device for splitting the light beam incident. 4,302,075, Cl. 350-171.000.
Matsumoto, Seiji: See—
 Kato, Hisatoyo; Matsumoto, Seiji; and Miyahara, Junji, 4,302,671, Cl. 250-327.100.
 Kato, Hisatoyo; Ishida, Masamitsu; and Matsumoto, Seiji, 4,302,672, Cl. 250-327.100.
Matsumura, Susumu: See—
 Matsumoto, Kazuya; and Matsumura, Susumu, 4,302,075, Cl. 350-171.000.
Matsuo, Kohtaro; and Tsuchida, Seiichi, to Arakawa Kagaku Kogyo Kabushiki Kaisha. Stabilized rosin ester and pressure-sensitive adhesive and hot-melt composition based thereon. 4,302,371, Cl. 260-28.50R.
Matsushima, Hiroshi: See—
 Mima, Soichiro; Matsushima, Hiroshi; Shimeki, Yasuharu; and Kihara, Nobuyoshi, 4,302,783, Cl. 360-47.000.
Matsushita Electric Industrial Co., Ltd.: See—
 Kamura, Takashi; and Taniguchi, Hiroshi, 4,302,768, Cl. 358-36.000.
 Matsumoto, Hisayuki; Niimi, Uneho; and Obata, Shuichi, 4,302,692, Cl. 310-113.000.
 Nakagawa, Tokihalu; and Ohmiya, Shoji, 4,302,411, Cl. 264-107.000.
Matsushita, Takeshi: See—
 Ohuchi, Norikazu; Yamoto, Hisayoshi; Hayashi, Hisao; and Matsushita, Takeshi, 4,302,763, Cl. 357-16.000.
Matteini, Maurizio: See—
 Turelli, Federico; and Matteini, Maurizio, 4,302,657, Cl. 219-137.00R.
Matteson, Donn M.: See—
 Mazur, Joseph M.; and Matteson, Donn M., 4,302,290, Cl. 376-287.000.
Matteson, Lawrence J.: See—
 Greenwald, Rogers J.; and Matteson, Lawrence J., 4,302,084, Cl. 354-25.000.
Mattfeld, Johann, to Licentia patent-Verwaltungs-G.m.b.H. Circuit for controlling a current source transistor. 4,302,719, Cl. 323-316.000.
Mattimoe, Paul T., to Libbey-Owens-Ford Company. Architectural spandrel. 4,302,503, Cl. 428-323.000.
Mattson, Glenn A., to RCA Corporation. Tape cartridge. 4,301,976, Cl. 242-55.19A.
Matumoto, Shigeru: See—
 Sado, Ryoichi; Okamoto, Takekuni; and Matumoto, Shigeru, 4,302,648, Cl. 200-159.00B.
Mauldin, Charles H.; and Baird, William C., Jr., to Exxon Research & Engineering Co. Process for preparing multimetallic reforming catalysts. 4,302,359, Cl. 252-466.0PT.
Max-Planck-Gesellschaft zur Forderung der Wissenschaften e.V.: See—
 Ritter, Alfred; and Kleinwachter, Jurgen, 4,301,965, Cl. 237-2.00B.
Maxcap, Inc.: See—
 Von Hagel, Leo, 4,301,937, Cl. 215-252.000.
Maxon Corporation: See—
 Belknap, James L.; and Coppin, William P., 4,302,178, Cl. 431-19.000.
May, Dean S.; and Rigotti, James M., to International Business Machines Corporation. Printing machine with throat for front loading of sheets. 4,302,116, Cl. 400-124.000.
May, Russell P. Anti-spin coupling for orbiting disc razor. 4,301,593, Cl. 30-42.000.
Mayer, Joseph: See—
 Peer, Lydia; and Mayer, Joseph, 4,302,599, Cl. 564-146.000.
Mayse, Weldon D.: See—
 Watson, Frederick D.; Mayse, Weldon D.; and Franse, Albert D., 4,302,310, Cl. 204-186.000.
Mazur, Joseph M.; and Matteson, Donn M., to Combustion Engineering, Inc. Nuclear reactor vessel head equipment support structure. 4,302,290, Cl. 376-287.000.
McAdams, Luther J., Sr. Anti-theft mechanism for removable automobile roof panels. 4,302,045, Cl. 296-224.000.
McAlister, Roy E. Multiple fluid medium system and improved heat exchanger utilized therein. 4,301,862, Cl. 165-165.000.
McAndless, John M.: See—
 Last, Anthony J.; and McAndless, John M., 4,302,485, Cl. 427-57.000.
McCabe, Francis J. Quadrant operator. 4,301,569, Cl. 16-48.500.
McCann, John D.: See—
 Stephen, James H.; and McCann, John D., 4,302,846, Cl. 455-19.000.
McCarter, Robert J., to United States of America, Commerce. Flame retarding cellulosic materials with sodium or potassium thiocyanate. 4,302,345, Cl. 252-62.000.
McCarty, Frederick B.: See—
 Burgmeier, Lyman R.; McCarty, Frederick B.; and Silver, Alexander, 4,302,693, Cl. 310-156.000.
McClaughry, Michael J.; and Byrns, John P., to Motorola, Inc. Phase-encoded data signal demodulator. 4,302,845, Cl. 375-82.000.
McCombs, Norman R.; and Schlaechter, John, to Greene & Kellogg, Inc. Compact oxygen concentrator. 4,302,224, Cl. 55-160.000.
McCoy, Bryon W.: See—
 Grondin, Edward A.; Tulloch, Lawrence R.; Perkins, Martin P., Jr.; Krstovic, Alexander P.; McCoy, Bryon W.; and Morey, Kevin P., 4,301,602, Cl. 34-43.000.
McCoy, Daniel E.: See—
 Jukkola, Walfred W.; Leon, Albert M.; Van Dyk, Garritt C., Jr.; McCoy, Daniel E.; Fisher, Barry L.; Saiers, Timothy L.; and Karstetter, Marlin E., 4,301,771, Cl. 122-4.00D.
McCulloch, James M., to Lucas Industries Limited. Motor vehicle electrical system. 4,302,841, Cl. 371-70.000.
McDonnell Douglas Corporation: See—
 Byrd, Norman R., 4,302,490, Cl. 427-301.000.
 Schimmel, Morry L.; and Young, Don L., Jr., 4,301,707, Cl. 89-1.00B.
McElhenny, Stuart W., to General Electric Company. Automatic train operation with position stop and velocity control. 4,302,811, Cl. 364-426.000.
McElwain, Merle G.; and Keckler, Gary D., to Caterpillar Tractor Co. Article transfer apparatus. 4,301,641, Cl. 53-493.000.
McFadden, David H.: See—
 Harvey, Andrew C.; and McFadden, David H., 4,302,018, Cl. 277-27.000.
McGinness, Houston D.: See—
 United States of America, National Aeronautics and Space Administration; and McGinness, Houston D., 4,301,740, Cl. 105-1.00A.
McGraw-Edison Company: See—
 Sit, Hoffman, 4,302,798, Cl. 362-147.000.
McGraw, Philip W.: See—
 Carswell, Robert; and McGraw, Philip W., 4,302,343, Cl. 252-33.400.
McKeever, Robert B.: See—
 Finlayson, James W.; Reyes, Renato D.; Eberle, Ralph F.; Wojcik, Thaddeus A.; Gumbert, James L.; McKeever, Robert B.; Nagy, Emery E.; and Houserman, Howard E., Jr., 4,302,146, Cl. 414-744.00R.
McKeever, Robert E.: See—
 Baker, Albert F.; Blaustein, Eric W.; Deurbrouck, Albert W.; Garvin, John P.; and McKeever, Robert E., 4,302,209, Cl. 44-10.00D.
McKenzie, Thomas C.: See—
 Fanshawe, William J.; McKenzie, Thomas C.; and Crawley, Lantz S., 4,302,589, Cl. 546-201.000.
McLeod, Margaret. Separable, fitted liner and bed sheet for waterbeds. 4,301,561, Cl. 5-496.000.
McMahon, Donald H., to Sperry Corporation. Multiple terminal passive multiplexing apparatus. 4,302,835, Cl. 370-4.000.
McNeely, Michael L., to RCA Corporation. Apparatus for molding recorded discs. 4,302,175, Cl. 425-385.000.
McNeill-Favia Company: See—
 McNeill, Robert M., 4,301,952, Cl. 224-32.00A.
McNeill, Robert M., to McNeill-Favia Company. Article carrying bag for bicycles and the like. 4,301,952, Cl. 224-32.00A.
McSparran, Lloyd W.; Ryan, Paul T.; and Smith, Russell M., to General Electric Company. System for automatically controlling an electrically propelled traction vehicle traversing a gap in wayside source of power. 4,301,899, Cl. 191-3.000.
McVicker, Gary B., to Exxon Research & Engineering Co. Heteronuclear noble metal cluster catalysts. 4,302,400, Cl. 260-429.00R.
Mead Corporation, The: See—
 Cooley, Jack S.; and Ziecker, Roger A., 4,301,912, Cl. 198-436.000.
Meadows, Timothy: See—
 deNavarre, Maison G.; and Meadows, Timothy, 4,302,443, Cl. 424-68.000.
Mecilec: See—
 Guillemot, Philippe, 4,301,685, Cl. 73-723.000.
Medtronic, Inc.: See—
 Thompson, David L.; Duggan, Stephen R.; and Roline, Glenn M., 4,301,804, Cl. 128-419.0PG.
Mehren, Herbert; and Braun, Dieter, to Daimler-Benz Aktiengesellschaft. Vehicle adapted to be externally mechanically guided, especially for the public local passenger traffic. 4,301,739, Cl. 104-247.000.
Meier, Gunter, to Dorina Nahmaschinen GmbH, Firma. Sewing machine with tape recorder for user instruction and memory programming. 4,301,753, Cl. 112-121.110.
Meiji Seika Kaisha, Ltd.: See—
 Iwamatsu, Katsuyoshi; Itoh, Jiro; Omoto, Shoji; Tsuruoka, Takashi; and Inouye, Shigeharu, 4,302,580, Cl. 544-21.000.
Meisenheimer, Daniel T., Jr. Self-closing breakaway valve assembly including improved valve mounting with rotation limiting stop. 4,301,823, Cl. 137-68.00R.
Meiser, Charles H., Jr.: See—
 Miller, Bernard; Friedman, Henry L.; and Meiser, Charles H., Jr., 4,302,222, Cl. 55-67.000.
Meltzer, Joel. Simulated stained glass article and method of making same. 4,302,260, Cl. 156-63.000.
Melvin, George E.: See—
 Hetherington, Richard J.; Melvin, George E.; Milkovich, Stephen A.; and Urfer, Ernest N., 4,302,625, Cl. 174-68.500.
Menchetti, Piero: See—
 Cozzi, Paolo; Menchetti, Piero; de Carneri, Ivo; and Trane, Franca, 4,302,472, Cl. 424-324.000.
Mendy, Francois; Blain, Sylvain; and Domer, Roland, to Roussel Uclaf. Food or dietetic substances having an alveolar structure and process of preparing same. 4,302,477, Cl. 426-250.000.

Menne, Rolf; and Petters, Willi, to Dynamit Nobel Aktiengesellschaft. Vibration transmission system for ignition devices. 4,301,735, Cl. 102-427.000.
Menser, Howard K.; and Newcomb, Robert D., to Menser Industries. Sun tracking controller. 4,302,710, Cl. 318-117.000.
Menser Industries: See—
 Menser, Howard K.; and Newcomb, Robert D., 4,302,710, Cl. 318-117.000.
Mentelos, Richard A., to Novametrix Medical Systems, Inc. Apparatus and method for temperature compensated transcutaneous carbon dioxide measurement. 4,301,807, Cl. 128-635.000.
Mentler, Sandor, to Burroughs Corporation. Controlled current base drive circuit. 4,302,807, Cl. 363-134.000.
Merck & Co., Inc.: See—
 Huff, Joel R.; King, Stella W.; and Saari, Walfred S., 4,302,455, Cl. 424-250.000.
 Stapley, Edward O.; and Mata, Justo M., 4,302,578, Cl. 542-427.000.
Merck Patent Gesellschaft mit Beschrankter Haftung: See—
 Eidenschink, Rudolf; and Pohl, Ludwig, 4,302,352, Cl. 252-299.630.
 Fischer, Wolfgang; and Wissel, Brigitte, 4,302,480, Cl. 427-2.000.
Merker, George: See—
 Jaffe, Erwin; Matalia, Harshad; Rinehart, William D.; Warner, Frederick L.; Navi, Menashe; and Merker, George, 4,301,728, Cl. 101-220.000.
Merry, Jack D.; and Dunn, William J., to Kendall Company, The. Urine meter. 4,301,813, Cl. 128-762.000.
Messerschmitt-Bolkow-Blohm GmbH: See—
 Munding, German; Hopmann, Helmut; Sowa, Armin; Beckervordersandforth, Christian; and Terschuren, Walter, 4,301,875, Cl. 175-12.000.
Metal Box Limited: See—
 Franek, Jozef T., 4,301,595, Cl. 30-427.000.
Metallgesellschaft Aktiengesellschaft: See—
 Pfohl, Rainer; Gritschke, Martin; and Schubert, Jurgen, 4,302,338, Cl. 210-752.000.
Metalurgica Rodynet Ltda.: See—
 Nunez, Dario, 4,302,037, Cl. 292-128.000.
Michalik, Anthony J.; Thiel, Peter L.; Elson, Ronald D.; and Palmer, James A., to Rexnord Inc. Snap-on attachment for roller chain conveyors. 4,301,915, Cl. 198-851.000.
Michel, Alwin E.: See—
 Horng, Cheng T.; and Michel, Alwin E., 4,301,588, Cl. 29-276.000.
Michelotti, Donald P., to PPG Industries, Inc. Shaping sheets of heat-softenable material. 4,302,417, Cl. 264-322.000.
Michigan Technological University, Board of Control of: See—
 El Khadem, Hassan S.; and Swartz, David L., 4,302,449, Cl. 424-180.000.
Micro Consultants Limited: See—
 Taylor, Richard J.; and Bennett, Phillip P., 4,302,776, Cl. 358-160.000.
Microplex, Inc.: See—
 Duba, David E., 4,302,744, Cl. 338-314.000.
Midland-Ross Corporation: See—
 Durling, Harold, 4,302,057, Cl. 303-7.000.
 Goron, John, 4,302,170, Cl. 425-133.100.
Midorikawa, Minoru, to Nissan Motor Company, Limited. Dipstick. 4,301,597, Cl. 33-126.70R.
Mielke, Klaus H. Electromagnetic wire printer. 4,302,114, Cl. 400-124.000.
Miguel, Marvin E. Bale destacker. 4,302,141, Cl. 414-119.000.
Mikami, Yasuo; Kanda, Hiroshi; and Uno, Akio, to Nisshin Oil Mills, Ltd., The. Process for manufacturing soybean proteins. 4,302,473, Cl. 426-46.000.
Mikami, Yasuo; Kanda, Hiroshi; and Uno, Akio, to Nisshin Oil Mills, Ltd. Process for preparing mayonnaise-like foods. 4,302,474, Cl. 426-52.000.
Mikitenko, Paul; and Asselineau, Lionel, to Institut Francais du Petrole. Process for isolating methyl tert-butyl ether from the reaction products of methanol with a C_4 hydrocarbon cut containing isobutene. 4,302,298, Cl. 203-75.000.
Milkovich, Stephen A.: See—
 Hetherington, Richard J.; Melvin, George E.; Milkovich, Stephen A.; and Urfer, Ernest N., 4,302,625, Cl. 174-68.500.
Miller, Bernard; Friedman, Henry L.; and Meiser, Charles H., Jr., to Textile Research Institute. Methods and apparatus for continuous preparative chromatographic separation of fluid mixtures. 4,302,222, Cl. 55-67.000.
Miller, Edward H., to General Electric Company. Baffled moisture separator. 4,302,227, Cl. 55-269.000.
Miller, George A.; and Weiler, Ernest D., to Rohm and Haas Company. Alkyl (mono-, di, tri- and tetra-thio)phosphorylated isothiazolidin-3-one 1-oxides and 1,1-dioxides. 4,302,240, Cl. 71-090.000.
Miller, John C.; Burnett, Archibald L.; and Scarola, Leonard S., to Union Carbide Corporation. Method for the extrusion of thermoplastic material composites. 4,302,409, Cl. 264-45.900.
Miller, [redacted] C.: See—
 Burmeister, Robert J.; Heckman, Russell W.; Miller, Robert C.; and Nickey, George A., 4,302,275, Cl. 156-448.000.
Miller, Robert E., to Universal Fluid Heads (Aust.) Pty. Ltd. Controllable pivot incorporating independent drag and locking brakes. 4,301,896, Cl. 188-70.00R.
Mills, King L.: See—
 Cheng, Paul J.; and Mills, King L., 4,302,423, Cl. 422-111.000.
Mills, Milton K.: See—
 Scarzello, John F.; Lenko, Daniel S.; Krall, Albert D.; Grine, Wayne R.; Brown, Robert E.; Usher, George W.; Mills, Milton K.; and Syeles, Albert M., 4,302,746, Cl. 340-38.00L.
Mills, William R., Jr.: See—
 Allen, Linus S.; and Mills, William R., Jr., 4,302,669, Cl. 250-264.000.
Milwaukee Faucets, Inc.: See—
 Rudelick, John, 4,301,972, Cl. 239-443.000.
Mima, Soichiro; Matsushima, Hiroshi; Shimeki, Yasuharu; and Kihara, Nobuyoshi. Method and apparatus for recording and reproducing a plurality of bits on a magnetic tape. 4,302,783, Cl. 360-47.000.
Minai, Kiichi: See—
 Adachi, Hideo; and Minai, Kiichi, 4,302,674, Cl. 250-338.000.
Minematsu, Hiroyoshi: See—
 Kawaguchi, Takeyuki; Taketani, Yutaka; Sasaki, Noriaki; Minematsu, Hiroyoshi; Hayashi, Yuzuru; and Hara, Shigeyoshi, 4,302,336, Cl. 210-654.000.
Ministry of International Trade & Industry: See—
 Haruta, Masatake; Sano, Hirosi; and Nakamura, Tomizo, 4,302,360, Cl. 252-471.000.
Miranowski, Duaine L.: See—
 Dimmer, Jerry R.; Ponto, Gene D.; Shorma, Edward F.; Shorma, Richard E.; Shorma, William J.; and Miranowski, Duaine L., 4,302,043, Cl. 296-98.000.
Mitchell, Peter G.: See—
 Kent, William H.; and Mitchell, Peter G., 4,302,826, Cl. 367-82.000.
Mitoff, Stephan P.: See—
 Powers, Robert W.; and Mitoff, Stephan P., 4,302,519, Cl. 429-193.000.
Mitsubishi Chemical Industries, Ltd.: See—
 Tamaru, Akio; and Kitsunai, Minoru, 4,302,243, Cl. 75-1.00T.
Mitsubishi Denki Kabushiki Kaisha: See—
 Kato, Masaru; Takeuchi, Hitoshi; and Horiuchi, Toshiaki, 4,302,514, Cl. 428-569.000.
 Wakayama, Naoaki; Tomoda, Toshimasa; and Fukakusa, Shinji, 4,302,696, Cl. 313-93.000.
Mitsubishi Jukogyo Kabushiki Kaisha: See—
 Atsukawa, Masumi; Matsumoto, Kazuhiro; Seto, Toru; Sera, Toshikuni; and Ukawa, Naohiko, 4,302,431, Cl. 423-239.000.
 Ueda, Kenji; and Sakanishi, Akihiro, 4,302,304, Cl. 204-130.000.
Mitsubishi Kasei Kogyo Kabushiki Kaisha: See—
 Ishikawa, Seiji, 4,302,299, Cl. 204-1.00T.
Mitsubishi Light Metal Ind., Ltd.: See—
 Kaifuchi, Toshiaki, 4,302,302, Cl. 204-67.000.
Mitsubishi Paper Mills, Ltd.: See—
 Kohmura, Isao; Iwata, Tamotsu; and Oka, Shozi, 4,302,526, Cl. 430-227.000.
Mitsubishi Petrochemical Co., Ltd.: See—
 Ichihara, Shoji; and Seo, Iwao, 4,302,408, Cl. 264-22.000.
Mitsubishi Rayon Co., Ltd.: See—
 Toyooka, Yasuo; Ohnishi, Kunio; Murase, Haruo; and Ueno, Tadaomi, 4,302,497, Cl. 428-203.000.
Mitsui Toatsu Chemicals Incorporated: See—
 Saitoh, Jun; Fujii, Kenzo; Nakagawa, Toshimi; Honda, Tadatoshi; Mitsuishi, Takatoshi; and Itoh, Hiroshi, 4,302,600, Cl. 564-206.000.
 Tsujimoto, Michihiro; Nishizawa, Tsutomu; Hasegawa, Kiyoharu; and Abe, Nobuyoshi, 4,302,396, Cl. 260-346.300.
Mitsuishi, Takatoshi: See—
 Saitoh, Jun; Fujii, Kenzo; Nakagawa, Toshimi; Honda, Tadatoshi; Mitsuishi, Takatoshi; and Itoh, Hiroshi, 4,302,600, Cl. 564-206.000.
Miyahara, Junji: See—
 Kato, Hisatoyo; Matsumoto, Seiji; and Miyahara, Junji, 4,302,671, Cl. 250-327.100.
Miyake, Tetsuya; Ogawa, Norito; Inada, Kohji; and Takeda, Kunihiko, to Asahi Kasei Kogyo Kabushiki Kaisha. Isotope separation. 4,302,424, Cl. 422-159.000.
Miyamoto, Koichi: See—
 Kan, Yasuhito; Kimura, Yoshimasa; Ishida, Masato; Miyamoto, Koichi; and Tohyama, Yoshikuni, 4,302,098, Cl. 355-55.000.
Miyamoto, Noriaki, to Kabushiki Kaisha Toyoda Jidoshokki Seisakusho. Combing roller. 4,301,572, Cl. 19-97.000.
Mizuchima, Koichi: See—
 Goodenough, John B.; and Mizuchima, Koichi, 4,302,518, Cl. 429-104.000.
Mo, Olav. Gas platform. 4,302,130, Cl. 405-210.000.
Mobay Chemical Corporation: See—
 Phillips, Barry A.; Spitler, Keith G.; and Keegan, Richard E., 4,302,272, Cl. 156-309.900.
Mobil Oil Corporation: See—
 Allen, Linus S.; and Mills, William R., Jr., 4,302,669, Cl. 250-264.000.
 Chen, Nai Y., 4,302,323, Cl. 208-89.000.
 Chu, Chin-Chiun, 4,302,620, Cl. 585-467.000.
 Chu, Chin-Chiun, 4,302,622, Cl. 585-467.000.
 Chu, Chin-Chiun C., 4,302,621, Cl. 585-467.000.
 Gross, Benjamin; and Voltz, Sterling E., 4,302,619, Cl. 585-408.000.
 Paul, James M., 4,302,428, Cl. 423-16.000.
Mock, Karl H., to Svenska Rotor Maskiner AB. Adjusting means of rotary regenerative sector plate heat exchangers. 4,301,858, Cl. 165-9.000.
Mock, Karl J. Means for recovering a precious metal from an electrolyte solution containing ions of said metal. 4,302,317, Cl. 204-228.000.

Mock, Karl J. Means for recovering silver from photo chemicals. 4,302,318, Cl. 204-229.000.
Modeen, Douglas P.: *See*—
Hubbard, Richard G., Jr.; and Modeen, Douglas P., 4,302,770, Cl. 358-75.000.
Mola, Giuseppe, to G.M.G. System S.p.A. Poultry loading apparatus. 4,301,769, Cl. 119-82.000.
Molex Incorporated: *See*—
Ditzig, Albert F., 4,302,637, Cl. 200-6.00R.
Molins Machine Company, Inc.: *See*—
Scardapane, Anthony N., 4,301,598, Cl. 33-147.00L.
Momiyama, Kikuo: *See*—
Suzuki, Ryoichi; Uchiyama, Takashi; Murakami, Hiroyasu; Kawamura, Masaharu; Sakai, Shinji; and Momiyama, Kikuo, 4,302,086, Cl. 354-53.000.
Monckton, Lewis P.; and Austin, John J., to Champion International Corporation. Straight line glued folder. 4,301,962, Cl. 229-72.000.
Moneymaker, Elton G.: *See*—
Latos, Edward L.; and Moneymaker, Elton G., 4,301,924, Cl. 206-520.000.
Monsanto Company: *See*—
Dyroff, David R.; Lynch, Gary J.; and Papanu, Victor D., 4,302,564, Cl. 525-398.000.
Li, Tao P., 4,302,617, Cl. 570-230.000.
Monsoo, Randy R.; and O'Neal, Robert L., to Western Electric Company, Incorporated. Edge connectors for circuit cards and methods of assembly. 4,302,067, Cl. 339-275.00R.
Montgaillard, Jean; and Shroff, Arvind, to Thomson-CSF. Thermionic cathode having an embedded grid, process for its fabrication, and high frequency electron tubes using such a cathode. 4,302,702, Cl. 313-348.000.
Morales, Kenneth A., to United Aircraft Products, Inc. Actuating sealing joint. 4,302,020, Cl. 277-205.000.
Moran, James H., to Schlumberger Technology Corporation. Apparatus and method for determining dip and/or anisotropy of formations surrounding a borehole. 4,302,723, Cl. 324-343.000.
Morel, Henri, to ITW de France. Non-removable fastening devices. 4,301,986, Cl. 248-221.300.
Morey, Kevin P.: *See*—
Grondin, Edward A.; Tulloch, Lawrence R.; Perkins, Martin P., Jr.; Krstovic, Alexander P.; McCoy, Bryon W.; and Morey, Kevin P., 4,301,602, Cl. 34-43.000.
Morgan, Webster. Mail return kit. 4,301,919, Cl. 206-223.000.
Mori, Kenzo; and Yasuda, Hyo, to Taiyo Musen Co. Ltd. Radio direction finder. 4,302,759, Cl. 343-121.000.
Moriyama, Noboru: *See*—
Yamamura, Masaaki; Moriyama, Noboru; and Watanabe, Shinichi, 4,302,212, Cl. 44-51.000.
Morokawa, Shigeru; Sekiya, Fukuo; Hashimoto, Yukio; Nomura, Yasushi; and Koga, Keiichiro, to Citizen Watch Company Limited. Electronic timepiece. 4,302,828, Cl. 368-69.000.
Morokawa, Shigeru; Sekiya, Fukuo; Hashimoto, Yukio; Nomura, Yasushi; and Koga, Keiichiro, to Citizen Watch Company Limited. Electronic timepiece. 4,302,829, Cl. 368-82.000.
Morris, Alan R.: *See*—
Haskew, Francis A.; Jones, Leslie A.; Morris, Alan R.; Tothfalusi, Miklos; and Plummer, Derek, 4,302,054, Cl. 299-31.000.
Morrison, Robert W., Jr.; Mallory, William R.; and Styles, Virgil L., to Burroughs Wellcome Co. 6-(1-Methylhydrazino)isocytosine. 4,302,587, Cl. 544-320.000.
Morser, Alfred H.; and Szekely, Paul. DC Servomotor circuit having drive current controlled as a function of motor speed. 4,302,711, Cl. 318-327.000.
Moss, Alan: *See*—
Paul, Lowell A.; and Moss, Alan, 4,301,845, Cl. 144-34.00E.
Motew, Stuart: *See*—
Abrams, Richard F.; Motew, Stuart; Wojnarowski, Robert; and Wachta, Zygmunt, 4,302,419, Cl. 422-62.000.
Motorola, Inc.: *See*—
Labedz, Gerald P., 4,302,817, Cl. 364-724.000.
McClaughry, Michael J.; and Byrns, John P., 4,302,845, Cl. 375-82.000.
Mottice, Susan L.: *See*—
Young, Frank E.; Wilson, Gary A.; and Mottice, Susan L., 4,302,544, Cl. 435-253.000.
Moulton, Robert K.; and Thompson, John W., to Sperry Corporation. Harmonic phase locked loop with undesired DC component suppression. 4,302,732, Cl. 331-176.000.
Moya, Liborio A. Rotary brush including stationary guide means with slidable bearing means. 4,302,122, Cl. 401-268.000.
MT Machine Company AB: *See*—
Hallqvist, Ellert, 4,302,144, Cl. 414-590.000.
Muchnik, Simon V.: *See*—
Chernogorenko, Vasily B.; Alzhanov, Tleubai M.; Lynchak, Kima A.; Muchnik, Simon V.; Ishkhanov, Evgeny S.; Sergienko, Vladimir Y.; Sapian, Vladimir G.; Koverya, Vladimir M.; Pobortsev, Mendel E.; Markovsky, Evgeny A.; Dmitrenko, Valentina V.; Bykov, Vladimir I.; Kipchakbaev, Alexandr D.; and Vopilov, Alexandr N., 4,302,249, Cl. 75-143.000.
Mueller, Dale A.; and Serber, Stephen L., to Honeywell Inc. Heat pump system compressor fault detector. 4,301,660, Cl. 62-126.000.
Mueller, Helmut C.; and Gallagher, Harry G., to Bigelow-Sanford, Inc. Process for treating tufted pile fabric. 4,301,577, Cl. 26-2.00R.
Mueller, Horst, to Siemens Aktiengesellschaft. Multiplex unit with means for responding to signal loss in one or more channels. 4,302,839, Cl. 370-102.000.
Muhlemann, Hans R.; Firestone, Allen R.; and Imfeld, Thomas, to Muhlemann, Hans R. Solid oral preparations of urea hydrogen peroxide without glycerol. 4,302,441, Cl. 424-48.000.
Muller, Arno: *See*—
Eckert, Alton B.; Duwel, C. Edward; and Muller, Arno, 4,302,821, Cl. 364-900.000.
Munakata, Teruo: *See*—
Fukuda, Syozi; Munakata, Teruo; and Matsuki, Masashi, 4,301,908, Cl. 192-109.00F.
Mundelein, Wilfried: *See*—
Dammann, Peter; Berger, Hans-Peter; Mundelein, Wilfried; Bussmann, Manfred; and Beifuss, Horst, 4,301,578, Cl. 28-256.000.
Munding, German; Hopmann, Helmut; Sowa, Armin; Beckervordersandforth, Christian; and Terschuren, Walter, to Messerschmitt-Bolkow-Blohm GmbH. Method for making holes and producing gas in coal seams. 4,301,875, Cl. 175-12.000.
Munnekehoff, Gerd: *See*—
Adenheuer, Frank; and Munnekehoff, Gerd, 4,301,648, Cl. 57-280.000.
Murai, Shigeo: *See*—
Macedo, Pedro B.; Simmons, Joseph H.; and Murai, Shigeo, 4,302,231, Cl. 65-3.150.
Murakami, Hiroyasu: *See*—
Suzuki, Ryoichi; Uchiyama, Takashi; Murakami, Hiroyasu; Kawamura, Masaharu; Sakai, Shinji; and Momiyama, Kikuo, 4,302,086, Cl. 354-53.000.
Murakami, Yoshiyuki: *See*—
Tamamura, Junichi; Murakami, Yoshiyuki; and Terada, Akira, 4,302,633, Cl. 179-111.00E.
Murakawa, Tetsuya: *See*—
Kasanami, Tohru; Ikeda, Toshiaki; Murakawa, Tetsuya; and Kaneko, Toshimi, 4,302,736, Cl. 333-172.000.
Muraki, Ryoji; Takemura, Shinichiro; Ai, Tetsuo; and Kawasaki, Takaaki, to Kurashiki Boseki Kabushiki Kaisha; and Tokyo Shibaura Electric Co., Ltd. Input control method and means for nitrogen oxide removal. 4,302,205, Cl. 23-232.00R.
Murase, Haruo: *See*—
Toyooka, Yasuo; Ohnishi, Kunio; Murase, Haruo; and Ueno, Tadaomi, 4,302,497, Cl. 428-203.000.
Murata Manufacturing Co., Ltd.: *See*—
Adachi, Hideo; and Minai, Kiichi, 4,302,674, Cl. 250-338.000.
Fujishima, Satoru; and Nakamura, Takeshi, 4,302,694, Cl. 310-321.000.
Kasanami, Tohru; Ikeda, Toshiaki; Murakawa, Tetsuya; and Kaneko, Toshimi, 4,302,736, Cl. 333-172.000.
Murata, Mineo: *See*—
Ogawa, Taihei; Kubota, Seizo; Murata, Mineo; and Sekita, Shigeru, 4,302,132, Cl. 405-269.000.
Murthy, Rajam R.; and Rice, Billy J., to Koomey, Inc. Accumulator with preclosing preventer. 4,301,827, Cl. 137-207.000.
Musha, Toru: *See*—
Hamaoka, Takashi; Tanaka, Shunpei; Musha, Toru; and Oinoue, Kenichi, 4,302,830, Cl. 369-45.000.
Mussatt, Thomas J., to Sangamo Weston, Inc. Method and apparatus for controlling tape recorder. 4,302,784, Cl. 360-71.000.
Mussatt, Thomas J., to Sangamo Weston, Inc. Method and apparatus for controlling tape recorder. 4,302,785, Cl. 360-72.100.
Mussey, Richard A., to United States of America, Navy. Launch tube closure. 4,301,708, Cl. 89-1.810.
Nabeta, Takeshi; Masui, Takeshi; and Hasegawa, Tsuguo, to Denki Kagaku Kogyo Kabushiki Kaisha. Film for heat sealing and process of heat sealing. 4,302,554, Cl. 525-71.000.
Nagahara, Masayosi: *See*—
Fujiwara, Shigeru; Nagahara, Masayosi; Nagai, Satoshi; and Isobe, Toshihiro, 4,302,372, Cl. 260-29.300.
Nagai, Satoshi: *See*—
Fujiwara, Shigeru; Nagahara, Masayosi; Nagai, Satoshi; and Isobe, Toshihiro, 4,302,372, Cl. 260-29.300.
Nagai, Yohei; Nishimoto, Tetsuo; and Okamoto, Shimaji, to Nippon Gakki Seizo Kabushiki Kaisha. Electronic musical instrument. 4,301,704, Cl. 84-1.220.
Nagamatsu, Katsumi: *See*—
Hasegawa, Tetsuo; Nagamatsu, Katsumi; and Nishikawa, Yoshihiro, 4,302,201, Cl. 8-444.000.
Nagase, Minoru; and Doto, Shigeaki, to Nippon Air Brake Co., Ltd. Variable load valve device. 4,302,058, Cl. 303-22.00A.
Nagase, Yoshinori: *See*—
Omura, Ikuo; Yamauchi, Junichi; Nagase, Yoshinori; and Shibatani, Kyoichiro, 4,302,381, Cl. 260-42.150.
Nagashima, Koreyuki. Porous, heat resistant insulating substrates for use in printed circuit boards, printed circuit boards utilizing the same and method of manufacturing insulating substrates and printed circuit boards. 4,302,301, Cl. 428-304.000.
Nagato, Masaki: *See*—
Kotani, Teizo; Nagato, Masaki; and Arai, Kozo, 4,302,361, Cl. 252-503.000.
Nagl, Gert; Ribka, Joachim; Gotsmann, Ulrich; and Dickmanns, Heinz, to Cassella Aktiengesellschaft. Process for the preparation of a condensation product from phenothiazine and p-nitrosophenol. 4,302,582, Cl. 544-37.000.
Nagy, Emery E.: *See*—
Finlayson, James W.; Reyes, Renato D.; Eberle, Ralph F.; Wojcik, Thaddeus A.; Gumbert, James L.; McKeever, Robert B.; Nagy, Emery E.; and Houserman, Howard E., Jr., 4,302,146, Cl. 414-744.00R.

Najman, Emil R.: *See*—
Litwack, Zita; Hoberman, Barry W.; and Najman, Emil R., 4,301,849, Cl. 150-33.000.
Nakagawa, Kazuyuki: *See*—
Tominaga, Michiaki; Tone, Hitoshi; and Nakagawa, Kazuyuki, 4,302,588, Cl. 546-158.000.
Nakagawa, Tokihalu; and Ohmiya, Shoji, to Matsushita Electric Industrial Co., Ltd. Method of producing plate-shaped body. 4,302,411, Cl. 264-107.000.
Nakagawa, Toshimi: *See*—
Saitoh, Jun; Fujii, Kenzo; Nakagawa, Toshimi; Honda, Tadatoshi; Mitsuishi, Takatoshi; and Itoh, Hiroshi, 4,302,600, Cl. 564-206.000.
Nakagome, Takenari: *See*—
Yamada, Hirotada; Nakagome, Takenari; and Komatsu, Toshiaki, 4,302,454, Cl. 424-246.000.
Nakajima, Yoshio: *See*—
Yamazaki, Masafumi; Takayama, Shuichi; Tsuboshima, Kosaku; Nakajima, Yoshio; and Iwasawa, Teruo, 4,302,780, Cl. 358-228.000.
Nakamura, Kenichi: *See*—
Suzaki, Kazuo; Koda, Hirokazu; Nakamura, Kenichi; Yoshikawa, Syuich; and Ohara, Naoki, 4,301,754, Cl. 112-158.00E.
Nakamura, Masahiro, to Ohtake Works Company, Ltd. Ultrasonic wave oscillator circuit with output meter. 4,302,728, Cl. 331-25.000.
Nakamura, Norihiko; and Kato, Takashi, to Toyota Jidosha Kogyo Kabushiki Kaisha. Variable Venturi carburetor. 4,302,404, Cl. 261-44.00C.
Nakamura, Norihiko: *See*—
Inoue, Tokuta; Nakamura, Norihiko; and Itoh, Takaaki, 4,302,405, Cl. 261-44.00C.
Nakamura, Takeshi: *See*—
Fujishima, Satoru; and Nakamura, Takeshi, 4,302,694, Cl. 310-321.000.
Nakamura, Tomizo: *See*—
Haruta, Masatake; Sano, Hirosi; and Nakamura, Tomizo, 4,302,360, Cl. 252-471.000.
Nakano, Takazi. Wheel hub with a freewheel. 4,301,903, Cl. 192-64.000.
Nakauchi, Hiroshi; Inami, Yasuhiko; Uede, Hisashi; and Wada, Tomio, to Sharp Kabushiki Kaisha. Driver circuit for electrochromic displays. 4,302,751, Cl. 340-763.000.
Nakayama, Hisanobu: *See*—
Matsumoto, Fumio; Harase, Jirou; Takashima, Kunihide; and Nakayama, Hisanobu, 4,302,257, Cl. 148-111.000.
Nakayama, Takayuki; Inagaki, Nobuhiro; Ishihara, Michio; and Namazu, Ryosuke, to Fujitsu Limited. Optoelectronic semiconductor device having an optical fiber connector. 4,302,070, Cl. 350-96.190.
Namazu, Ryosuke: *See*—
Nakayama, Takayuki; Inagaki, Nobuhiro; Ishibara, Michio; and Namazu, Ryosuke, 4,302,070, Cl. 350-96.190.
Nanbu, Tetsuo: *See*—
Hatakenaka, Tatsuo; Tamaki, Kiyouhei; and Nanbu, Tetsuo, 4,301,958, Cl. 228-4.500.
Narumiya, Tsuneaki, to Bridgestone Tire Company Limited. Ceramic porous bodies. 4,302,502, Cl. 428-311.000.
Nash, Larry L., to Phillips Petroleum Company. Lactone copolymers as stripping aids in recovery of polymer from solution. 4,302,576, Cl. 528-500.000.
Nath, N. Gokul: *See*—
Ruff, David L.; and Nath, N. Gokul, 4,302,344, Cl. 252-62.000.
National Machinery Company, The: *See*—
Payne, George T.; and Eakin, Gerald R., 4,301,671, Cl. 72-344.000.
Nationwide Ultraseal Inc.: *See*—
Belmuth, Neal W., 4,302,747, Cl. 340-64.000.
Navi, Menashe: *See*—
Jaffe, Erwin; Matalia, Harshad; Rinehart, William D.; Warner, Frederick L.; Navi, Menashe; and Merker, George, 4,301,728, Cl. 101-220.000.
Naylor, Floyd E., to Phillips Petroleum Co. Conversion of alpha-methylstyrene-type monomers in the formation of copolymers with conjugated diene monomers. 4,302,559, Cl. 525-271.000.
Nebenzahl, Isaiah: *See*—
Levin, Menahm; and Nebenzahl, Isaiah, 4,302,676, Cl. 250-423.00P.
Nester, James F., to Perkin-Elmer Corporation, The. Non-contacting technique for electroplating X-ray lithography. 4,302,316, Cl. 204-224.00R.
Netherlands Offshore Co.: *See*—
Hofmeester, Paul M., 4,301,606, Cl. 37-66.000.
Neufeld, Garry J., to Nu Floor Co. Ltd. Composite joists, joist assemblies and building panels including such joist assemblies. 4,301,635, Cl. 52-483.000.
Neumann, Manfred: *See*—
Cosack, Klaus; Hein, Wolfgang; and Neumann, Manfred, 4,302,333, Cl. 210-456.000.
Neumann, Norbert C.: *See*—
Grover, Donald D.; and Neumann, Norbert C., 4,302,724, Cl. 324-402.000.
Neumann, Peter, to Isopag AG. Shingle-type building element. 4,301,633, Cl. 52-309.400.
Newcomb, Robert D.: *See*—
Menser, Howard K.; and Newcomb, Robert D., 4,302,710, Cl. 318-117.000.
Newman, Albert P.; and Hertzer, Ronald A., to Empire Products, Inc. Safety locking means for industrial grade electrical connectors. 4,302,066, Cl. 339-82.000.
Newman, Christopher J. Excavation and transplanting of plants with a ball of soil. 4,301,605, Cl. 37-2.00R.
Newman, Fredric M. Electric wall outlet protector. 4,302,624, Cl. 174-67.000.
Newton, Wood A. Toy airplane and method for making same. 4,301,614, Cl. 46-79.000.
Nibby, Chester M., Jr.; and Johnson, Robert B., to Honeywell Information Systems Inc. Delay line compensation network. 4,302,735, Cl. 333-138.000.
Nichol, Kenneth J.: *See*—
Davies, Roy V.; Fraser, James; Nichol, Kenneth J.; Parkinson, Raymond; Sim, Malcolm F.; and Yates, David B., 4,302,460, Cl. 424-258.000.
Nicholas, John C.; and Kirk, Robley G. Fluid film pocket bearing. 4,302,060, Cl. 308-9.000.
Nickey, George A.: *See*—
Burmeister, Robert J.; Heckman, Russell W.; Miller, Robert C.; and Nickey, George A., 4,302,275, Cl. 156-446.000.
Nicolet, Robert D., to Dorr-Oliver Incorporated. Method of bonding an ultrafiltration membrane assembly. 4,302,270, Cl. 156-290.000.
Nidola, Antonio: *See*—
deNora, Vittorio; Bianchi, Giuseppe; and Nidola, Antonio, 4,302,321, Cl. 204-291.000.
Niehaus, Jan G. C.: *See*—
Dukel, Cornelis; Hoogerheide, Pieter; and Niehaus, Jan G. C., 4,302,039, Cl. 292-341.160.
Nield, Gerald L.: *See*—
Yang, Kang; Nield, Gerald L.; and Washecheck, Paul H., 4,302,613, Cl. 568-618.000.
Nielsen, Steven T., to Beckman Instruments, Inc. Integral one piece centrifuge tube. 4,301,963, Cl. 233-26.000.
Niemann, George W., to Texas Instruments Incorporated. Micro-vector processor. 4,302,818, Cl. 364-736.000.
Niemi, Gary A. Illumination system and apparatus therefor. 4,302,069, Cl. 350-96.150.
Niemi, Ossi, to Flowcon Oy. Mixing apparatus. 4,302,110, Cl. 366-41.000.
Niida, Kenji. Automatic cigarette butt extinguishing device. 4,301,818, Cl. 131-237.000.
Niimi, Uneho: *See*—
Matsumoto, Hisayuki; Niimi, Uneho; and Obata, Shuichi, 4,302,692, Cl. 310-113.000.
Nikki Chemical Co., Ltd.: *See*—
Kojima, Mitsuo; Aida, Takahiro; and Asami, Yukio, 4,302,357, Cl. 252-437.000.
Nippon Air Brake Co., Ltd.: *See*—
Nagase, Minoru; and Doto, Shigeaki, 4,302,058, Cl. 303-22.00A.
Nippon Door Check Mfg. Co., Ltd.: *See*—
Demukai, Enzo, 4,301,623, Cl. 49-404.000.
Nippon Electric Co., Ltd.: *See*—
Ashida, Shigeaki, 4,302,731, Cl. 331-116.00R.
Esho, Sotaro; and Gokan, Hiroshi, 4,302,822, Cl. 365-8.000.
Inoue, Hidehiko, 4,302,779, Cl. 358-213.000.
Yoshino, Tetsuo; Sawano, Tsuyotake; and Takeuchi, Tokuo, 4,302,687, Cl. 307-252.00G.
Nippon Gakki Seizo Kabushiki Kaisha: *See*—
Iwamatsu, Masayuki, 4,302,727, Cl. 330-266.000.
Nagai, Yohei; Nishimoto, Tetsuo; and Okamoto, Shimaji, 4,301,704, Cl. 84-1.220.
Nippon Gohsei Kagaku Kogyo Kabushiki Kaisha: *See*—
Hasegawa, Masayasu; Nishikawa, Hideo; and Kotani, Yasuo, 4,302,467, Cl. 424-270.000.
Nippon Kogaku K.K.: *See*—
Fukuhara, Toru, 4,302,089, Cl. 354-152.000.
Kazami, Kazuyuki; Ohtsubo, Yoshiaki; and Kitamura, Yasunori, 4,302,085, Cl. 354-32.000.
Nippon Steel Corporation: *See*—
Fujiwara, Shigeru; Nagahara, Masayosi; Nagai, Satoshi; and Isobe, Toshihiro, 4,302,372, Cl. 260-29.300.
Matsomoto, Fumio; Harase, Jirou; Takashima, Kunihide; and Nakayama, Hisanobu, 4,302,257, Cl. 148-111.000.
Nishihara Environmental Sanitation Research Corp., Ltd.: *See*—
Hayakawa, Noboru; Furusato, Akaru; Saito, Toshio; and Iwai, Tastuyuki, 4,302,332, Cl. 210-369.000.
Nishikawa, Hideo: *See*—
Hasegawa, Masayasu; Nishikawa, Hideo; and Kotani, Yasuo, 4,302,467, Cl. 424-270.000.
Nishikawa, Mitsuyo: *See*—
Kurihara, Noboo; Nishikawa, Mitsuyo; and Kawano, Shigeyoshi, 4,302,813, Cl. 364-508.000.
Nishikawa, Yoshihiro: *See*—
Hasegawa, Tetsuo; Nagamatsu, Katsumi; and Nishikawa, Yoshihiro, 4,302,201, Cl. 8-444.000.
Nishimoto, Tetsuo: *See*—
Nagai, Yohei; Nishimoto, Tetsuo; and Okamoto, Shimaji, 4,301,704, Cl. 84-1.220.
Nishimura, Yuji; and Kubota, Tatsushi, to K. K. Tokai Rika Denki Seisakusho. Webbing anchor lock mechanism. 4,302,031, Cl. 280-804.000.
Nishizawa, Tsutomu: *See*—
Tsujimoto, Michihiro; Nishizawa, Tsutomu; Hasegawa, Kiyoharu; and Abe, Nobuyoshi, 4,302,396, Cl. 260-346.300.
Niskin, Shale J. Counter-balanced sheave. 4,301,995, Cl. 254-411.000.
Nissan Motor Co., Ltd.: *See*—
Fukuda, Syozi; Munakata, Teruo; and Matsuki, Masashi, 4,301,908, Cl. 192-109.00F.

Fukuma, Daizo; Okamoto, Hisao; Okamoto, Sumio; and Koreki, Takemasa, 4,302,258, Cl. 149-19.100.
Ishitani, Shigeo; Kimura, Shinji; Takao, Hiroshi; and Uchida, Masaaki, 4,302,312, Cl. 204-195.00S.
Iwanaga, Kazuyoshi; Sugano, Kazuhiko; and Ohtsuka, Kunio, 4,301,697, Cl. 74-869.000.
Midorikawa, Minoru, 4,301,597, Cl. 33-126.70R.
Sunohara, Yoshio; and Ohtsuka, Kunio, 4,301,900, Cl. 192-3.300.
Nisshin Oil Mills, Ltd., The: *See—*
Mikami, Yasuo; Kanda, Hiroshi; and Uno, Akio, 4,302,473, Cl. 426-46.000.
Mikami, Yasuo; Kanda, Hiroshi; and Uno, Akio, 4,302,474, Cl. 426-52.000.
Nisshin Spinning Co., Ltd.: *See—*
Hongu, Tatsuya; Suzuki, Toshio; and Ogawa, Yoshihiko, 4,302,552, Cl. 521-176.000.
Nobileau, Philippe C.; Dermy, Rene M.; and Fleury, Guy J., to Compagnie Francaise des Petroles; Etudes Petrolieres Marines; Ateliers et Chantiers de Bretagne - A.C.B.; Compagnie Maritime d'Expertises; Compagnie Generale pour les Developpements Operationnels des Richesses Sous-Marines (Doris); and Societe Nationale Elf Aquitaine (Production). Method of welding the ends of submerged pipes by sleeve abutment. 4,302,652, Cl. 219-72.000.
Nohara, Akira: *See—*
Ishiguro, Toshihiro; Ukawa, Kiyoshi; and Nohara, Akira, 4,302,463, Cl. 424-263.000.
Noiles, Douglas G., to United States Surgical Corporation. Prosthetic knee joint. 4,301,553, Cl. 3-1.911.
Nomori, Hiroyuki: *See—*
Takei, Yoshiaki; Kimura, Yoneko; and Nomori, Hiroyuki, 4,302,521, Cl. 430-59.000.
Nomura, Yasushi: *See—*
Morokawa, Shigeru; Sekiya, Fukuo; Hashimoto, Yukio; Nomura, Yasushi; and Koga, Keiichiro, 4,302,828, Cl. 368-69.000.
Morokawa, Shigeru; Sekiya, Fukuo; Hashimoto, Yukio; Nomura, Yasushi; and Koga, Keiichiro, 4,302,829, Cl. 368-82.000.
Nordell, Lennart R.: *See—*
Albertsson, Nils L.; Albertsson, Tor A.; Nordell, Lennart R.; Bjork, Bjorn V. B.; and El-Sayed, Refaat M., 4,302,677, Cl. 250-429.000.
Nordgren, Lars: *See—*
Stenlund, Stig; and Nordgren, Lars, 4,301,714, Cl. 91-394.000.
Northwestern Laboratories, Inc.: *See—*
Sumner, Jeffery L.; and Tinsley, Arthur L., 4,302,202, Cl. 8-455.000.
Notari, Bruno: *See—*
Manara, Giovanni; Fattore, Vittorio; and Notari, Bruno, 4,302,597, Cl. 564-127.000.
Novak, Lubomir: *See—*
Fitzgerald, Timothy P.; Novak, Lubomir; and Engman, Larry O., 4,301,929, Cl. 209-608.000.
Novametrix Medical Systems, Inc.: *See—*
Mentelos, Richard A., 4,301,807, Cl. 128-635.000.
Novogrodsky, Joseph: *See—*
Litwack, Zita; Hoberman, Barry W.; and Najman, Emil R., 4,301,849, Cl. 150-33.000.
NRM Corporation: *See—*
Enders, George E., 4,302,274, Cl. 156-401.000.
Nu Floor Co. Ltd.: *See—*
Neufeld, Garry J., 4,301,635, Cl. 52-483.000.
Nubani, Jawdat I., to RCA Corporation. Method for testing panel-to-funnel sealing layer of a cathode-ray tube. 4,302,725, Cl. 324-404.000.
Nunez, Dario, to Metalurgica Rodynet Ltda. Latch fastener for windows, doors or the like. 4,302,037, Cl. 292-128.000.
Nuovo Pignone, S.p.A.: *See—*
Turelli, Federico; and Matteini, Maurizio, 4,302,657, Cl. 219-137.00R.
O. Mustad & Don A/S: *See—*
Laugerud, Sverre; Etnestad, Herman; and Pedersen, Frode, 4,301,748, Cl. 110-245.000.
Obata, Shuichi: *See—*
Matsumoto, Hisayuki; Niimi, Uneho; and Obata, Shuichi, 4,302,692, Cl. 310-113.000.
O'Blasny, Richard H.: *See—*
Fletcher, Laird C.; and O'Blasny, Richard H., 4,302,325, Cl. 208-180.000.
Occidental Oil Shale, Inc.: *See—*
Burton, Robert S.; Rundberg, Sten I.; Vaughn, James V.; Williams, Thomas P.; and Benson, Gregory C., 4,301,866, Cl. 166-260.000.
Ochiai, Minoru: *See—*
Hattori, Kenro; Ogawa, Takeshi; Ochiai, Minoru; Tomikawa, Takeshi; and Ikeda, Takeji, 4,302,489, Cl. 427-244.000.
Ochwat, Richard S. One piece electrical connector. 4,302,035, Cl. 285-158.000.
Oda, Yoshio; Otouma, Hiroshi; and Endoh, Eiji, to Asahi Glass Company, Ltd. Low hydrogen overvoltage electrode. 4,302,322, Cl. 204-293.000.
Oeillet, Guy: *See—*
Dumont, Alian; Piolat, Christian; and Oeillet, Guy, 4,302,636, Cl. 179-170.0NC.
Office National d'Etudes et de Recherche Aerospatiales: *See—*
Tichtinsky, Jean-Claude, 4,302,709, Cl. 318-116.000.
Ogasa, Takehiro: *See—*
Hirata, Tadashi; Hashimoto, Yukio; Ogasa, Takehiro; Kobayashi, Shigeru; Sato, Akira; Sato, Kiyoshi; and Takasawa, Seigo, 4,302,540, Cl. 435-119.000.
Ogawa, Norito: *See—*
Miyake, Tetsuya; Ogawa, Norito; Inada, Kohji; and Takeda, Kunihiko, 4,302,424, Cl. 422-159.000.
Ogawa, Taihei; Kubota, Seizo; Murata, Mineo; and Sekita, Shigeru, to Sato Kogyo Kabushiki Kaisha; and Yamaguchi Kikai Kogyo Kabushiki Kaisha. Method of injecting grout into soil. 4,302,132, Cl. 405-269.000.
Ogawa, Takeshi: *See—*
Hattori, Kenro; Ogawa, Takeshi; Ochiai, Minoru; Tomikawa, Takeshi; and Ikeda, Takeji, 4,302,489, Cl. 427-244.000.
Ogawa, Yoshihiko: *See—*
Hongu, Tatsuya; Suzuki, Toshio; and Ogawa, Yoshihiko, 4,302,552, Cl. 521-176.000.
Ogiwara, Takeo: *See—*
Ohya, Masaki; Kobayashi, Akio; Ogiwara, Takeo; and Satake, Yoshikatsu, 4,302,558, Cl. 525-218.000.
Ohara, Naoki: *See—*
Suzaki, Kazuo; Koda, Hirokazu; Nakamura, Kenichi; Yoshikawa, Syuich; and Ohara, Naoki, 4,301,754, Cl. 112-158.00E.
Ohashi, Komei: *See—*
Funatsu, Akinobu; Oyama, Shuzoh; Akimoto, Yoshinori; and Ohashi, Komei, 4,302,384, Cl. 260-112.00B.
Ohhira, Hirosi: *See—*
Endo, Hiroyuki; Ohhira, Hirosi; and Sasaki, Tohru, 4,302,556, Cl. 525-199.000.
Ohio State University, The: *See—*
Stevens, Vernon C., 4,302,386, Cl. 260-112.50R.
Ohkawa, Tihiro, to General Atomic Company. Helical field stabilization of plasma devices. 4,302,284, Cl. 376-133.000.
Ohmiya, Shoji: *See—*
Nakagawa, Tokiharu; and Ohmiya, Shoji, 4,302,411, Cl. 264-107.000.
Ohnishi, Kunio: *See—*
Toyooka, Yasuo; Ohnishi, Kunio; Murase, Haruo; and Ueno, Tadaomi, 4,302,497, Cl. 428-203.000.
Ohtake Works Company, Ltd.: *See—*
Nakamura, Masahiro, 4,302,728, Cl. 331-25.000.
Ohtsubo, Yoshiaki: *See—*
Kazami, Kazuyuki; Ohtsubo, Yoshiaki; and Kitamura, Yasunori, 4,302,085, Cl. 354-32.000.
Ohtsuka, Kunio: *See—*
Iwanaga, Kazuyoshi; Sugano, Kazuhiko; and Ohtsuka, Kunio, 4,301,697, Cl. 74-869.000.
Sunohara, Yoshio; and Ohtsuka, Kunio, 4,301,900, Cl. 192-3.300.
Ohuchi, Norikazu; Yamoto, Hisayoshi; Hayashi, Hisao; and Matsushita, Takeshi, to Sony Corporation. Semiconductor device. 4,302,763, Cl. 357-16.000.
Ohya, Masaki; Kobayashi, Akio; Ogiwara, Takeo; and Satake, Yoshikatsu, to Kureha Kagaku Kogyo Kabushiki Kaisha. Antistatic resin composition. 4,302,558, Cl. 525-218.000.
Oinoue, Kenichi: *See—*
Hamaoka, Takashi; Tanaka, Shunpei; Musha, Toru; and Oinoue, Kenichi, 4,302,830, Cl. 369-45.000.
Oka, Shozi: *See—*
Kohmura, Isao; Iwata, Tamotsu; and Oka, Shozi, 4,302,526, Cl. 430-227.000.
Okada Kogyo Kabushiki Kaisha: *See—*
Okada, Yoshio, 4,301,594, Cl. 30-164.950.
Okada, Yoshio, to Okada Kogyo Kabushiki Kaisha. Handy rotary cutter. 4,301,594, Cl. 30-164.950.
Okamoto, Hisao: *See—*
Fukuma, Daizo; Okamoto, Hisao; Okamoto, Sumio; and Koreki, Takemasa, 4,302,258, Cl. 149-19.100.
Okamoto, Shimaji: *See—*
Nagai, Yohei; Nishimoto, Tetsuo; and Okamoto, Shimaji, 4,301,704, Cl. 84-1.220.
Okamoto, Sumio: *See—*
Fukuma, Daizo; Okamoto, Hisao; Okamoto, Sumio; and Koreki, Takemasa, 4,302,258, Cl. 149-19.100.
Okamoto, Takekuni: *See—*
Sado, Ryoichi; Okamoto, Takekuni; and Matumoto, Shigeru, 4,302,648, Cl. 200-159.00B.
Okura, Tsunehiko, to Ishizuka Glass Co., Ltd. Plane printing machine. 4,301,724, Cl. 101-35.000.
Olason, Ray, to Boeing Company, The. Vehicle loading apparatus for aircraft. 4,301,984, Cl. 244-137.00R.
Olin Corporation: *See—*
Profeta, Barry P.; and Shaw, David A., 4,302,206, Cl. 23-232.00R.
Olla, Robert S., to Fairchild Camera and Instrument Corp. Power supply with increased dynamic range. 4,302,717, Cl. 323-282.000.
Olsen, Robert C., to Illinois Tool Works Inc. Container carrier preform. 4,301,918, Cl. 206-150.000.
Olszewski, Egon: *See—*
Benteler, Hubertus; Streubel, Wolfgang; and Olszewski, Egon, 4,301,959, Cl. 228-102.000.
Olympus Optical Company Ltd.: *See—*
Hamaoka, Takashi; Tanaka, Shunpei; Musha, Toru; and Oinoue, Kenichi, 4,302,830, Cl. 369-45.000.
Hattori, Shinichiro, 4,302,707, Cl. 315-241.00P.
Takeuchi, Eiichi, 4,302,786, Cl. 360-74.200.
Yamazaki, Masafumi; Takayama, Shuichi; Tsuboshima, Kosaku; Nakajima, Yoshio; and Iwasawa, Teruo, 4,302,780, Cl. 358-228.000.

Omielczenko, Miroslaw: *See—*
Chamska, Ludwika; Maciak, Mieczyslaw; Majewski, Stanislaw; Omielczenko, Miroslaw; and Panczyk, Jerzy, 4,302,300, Cl. 204-16.000.
Omoto, Shoji: *See—*
Iwamatsu, Katsuyoshi; Itoh, Jiro; Omoto, Shoji; Tsuruoka, Takashi; and Inouye, Shigeharu, 4,302,580, Cl. 544-21.000.
Omura, Ikuo; Yamauchi, Junichi; Nagase, Yoshinori; and Shibatani, Kyoichiro, to Kuraray Co., Ltd. Dental material. 4,302,381, Cl. 260-42.150.
O'Neal, James E.: *See—*
Gunter, Josef K.; O'Neal, James E.; and Jones, Thomas R., 4,301,573, Cl. 19-200.000.
O'Neal, Robert L.: *See—*
Monson, Randy R.; and O'Neal, Robert L., 4,302,067, Cl. 339-275.00R.
Ono, Takeshi: *See—*
Yokoyama, Isao; and Ono, Takeshi, 4,302,200, Cl. 8-438.000.
Onuki, Kazuaki: *See—*
Umeki, Shinji; Onuki, Kazuaki; and Maruta, Fumio, 4,302,510, Cl. 428-403.000.
Oprean, George; and Counsilman, James E. Swimmer's drag producing belt. 4,302,007, Cl. 272-116.000.
Orogil: *See—*
Demoures, Bernard; and Le Coent, Jean-Louis, 4,302,342, Cl. 252-33.200.
Ortho Diagnostics Inc.: *See—*
Auteorieth, Stephen M.; and Zolton, Raymond P., 4,302,538, Cl. 435-13.000.
Osborn, Denis L., to H. W. Hart Mfg. Co. System for and method of feeding fowl. 4,301,768, Cl. 119-51.00R.
Osborne, Anthony; and Hanke, Kenneth E., to Kearney-National Inc. Electric switch and operating mechanism therefor. 4,302,646, Cl. 200-153.0SC.
Oswald, Alexis A., to Exxon Research & Engineering Co. Tetraalkyl phosphonium substituted phosphine and amine transition metal complexes. 4,302,401, Cl. 260-448.00C.
Otouma, Hiroshi: *See—*
Oda, Yoshio; Otouma, Hiroshi; and Endoh, Eiji, 4,302,322, Cl. 204-293.000.
Otsuka Pharmaceutical Co., Ltd.: *See—*
Tominaga, Michiaki; Tone, Hitoshi; and Nakagawa, Kazuyuki, 4,302,588, Cl. 546-158.000.
Ott, Karl-Heinz: *See—*
Lindner, Christian; Ott, Karl-Heinz; Arnold, Bernhard; Kowitz, Friedrich; and Kuhlmann, Dieter, 4,302,378, Cl. 260-31.600.
Ottersbach, Thomas V., to Emerson Electric Co. Self-retaining electrical terminal. 4,302,649, Cl. 200-284.000.
Otto Gerdau Co., The: *See—*
Ballard, L. David, 4,301,985, Cl. 248-188.000.
Otto, Jeffrey B.: *See—*
Howe, David M.; Otto, Jeffrey B.; and Traskos, Richard T., 4,302,413, Cl. 264-126.000.
Outboard Marine Corporation: *See—*
Blanchard, Clarence E., 4,302,196, Cl. 440-75.000.
Owens-Corning Fiberglass Corporation: *See—*
Canfield, Sheldon A., 4,302,623, Cl. 13-6.000.
Guffey, Larry J.; and Schultz, William W., 4,302,234, Cl. 65-14.000.
Owens-Illinois, Inc.: *See—*
Burmeister, Robert J.; Heckman, Russell W.; Miller, Robert C.; and Nickey, George A., 4,302,275, Cl. 156-446.000.
Oyama, Shuzoh: *See—*
Funatsu, Akinohu; Oyama, Shuzoh; Akimoto, Yoshinori; and Ohashi, Komei, 4,302,384, Cl. 260-112.00B.
Pachaly, Reinhard: *See—*
Hellmer, Lars; Keunecke, Gerhard; Lell, Rainer; Al-Muddarris, Ghazi R.; Pachaly, Reinhard; Stauffer, Adolf; and Vangala, V. Rao, 4,302,434, Cl. 423-573.00G.
Pachonik, Horst: *See—*
Behn, Reinhard; Heywang, Hermann; and Pachonik, Horst, 4,301,765, Cl. 118-718.000.
Pacific Scientific Company: *See—*
Yang, Elmer C., 4,301,977, Cl. 242-107.000.
Paglia, Richard, to Polaroid Corporation. Spring force biasing means for a capacitance-type electrostatic transducer. 4,302,634, Cl. 179-111.00R.
Pahl, Manfred H.: *See—*
Pisaric, Karl H.; Weber, Karl-Arnold; Traubel, Harro; Brauner, Dieter; and Pahl, Manfred H., 4,302,550, Cl. 521-133.000.
Paikoff, Myron: *See—*
John, Phillip M.; Belanger, Raymond J.; and Paikoff, Myron, 4,302,440, Cl. 424-35.000.
Pako Corporation: *See—*
Baert, Victor R.; and Bowe, Gerald R., 4,302,101, Cl. 355-74.000.
Palmer, James A.: *See—*
Michalik, Anthony J.; Thiel, Peter L.; Elson, Ronald D.; and Palmer, James A., 4,301,915, Cl. 198-851.000.
Palmer, John P.; and Ward, Phillip B., Jr., to General Dynamics, Pomona Division. Optical fiber mating apparatus and method. 4,302,267, Cl. 156-158.000.
Palson, Richard C.; and Armstrong, John C., to Pharmasol Corporation, The. Deodorant dispensing device. 4,301,949, Cl. 222-548.000.
Pamarco Incorporated: *See—*
Heurich, Charles R.; and Runck, Walter A., 4,301,730, Cl. 101-348.000.
Pan American Resources, Inc.: *See—*
Fio Rito, William M.; and Kidd, Ralph E., 4,301,750, Cl. 110-346.000.
Pancholy, Ranjeet K.; and Drouet, Rene, to Rockwell International Corporation. GaAs Crystal surface passivation method. 4,302,278, Cl. 156-610.000.
Panczyk, Jerzy: *See—*
Chamska, Ludwika; Maciak, Mieczyslaw; Majewski, Stanislaw; Omielczenko, Miroslaw; and Panczyk, Jerzy, 4,302,300, Cl. 204-16.000.
Pao, Peter Y. M.: *See—*
Martin, Walter H.; Briley, George C.; and Pao, Peter Y. M., 4,301,659, Cl. 62-57.000.
Papageorgiou, Dimitri G., to Papageorgiou, George; and Papageorgiou, Paul, part interest to each. Hair simulating fiber. 4,302,491, Cl. 428-15.000.
Papageorgiou, George: *See—*
Papageorgiou, Dimitri G., 4,302,491, Cl. 428-15.000.
Papageorgiou, Paul: *See—*
Papageorgiou, Dimitri G., 4,302,491, Cl. 428-15.000.
Papanu, Victor D.: *See—*
Dyroff, David R.; Lynch, Gary J.; and Papanu, Victor D., 4,302,564, Cl. 525-398.000.
Papp, Alfred: *See—*
Schneider, Hartmut; and Papp, Alfred, 4,302,232, Cl. 65-3.120.
Pariani, Ronald L.: *See—*
Berry, Milton E.; and Pariani, Ronald L., 4,301,997, Cl. 266-236.000.
Parizet, Roger, to Campagnie Industrielle de Mecanismes en Abrege CII.M. Slide structure for a vehicle seat and corresponding seat mount. 4,301,988, Cl. 248-430.000.
Parker, Alonzo E., Jr. Method for shackling live poultry. 4,301,770, Cl. 119-97.00R.
Parker-Hannifin Corporation: *See—*
Burge, Donald G., 4,302,036, Cl. 285-323.000.
Parkinson, Raymond: *See—*
Davies, Roy V.; Fraser, James; Nichol, Kenneth J.; Parkinson, Raymond; Sim, Malcolm F.; and Yates, David B., 4,302,460, Cl. 424-258.000.
Parks, Bennie L.: *See—*
Bennett, William T.; and Parks, Bennie L., 4,302,654, Cl. 219-121.0LL.
Paspek, Stephen C., to Standard Oil Company. Sulfur getter efficiency. 4,302,207, Cl. 44-1.00R.
Pasternack, Adalbert, to Dragerwerk Aktiengesellschaft. Respirator with cooling device. 4,301,792, Cl. 128-202.260.
Patel, Babubhai C.: *See—*
Hermann, Gerson; Patel, Babubhai C.; and Baer, Emil, 4,302,203, Cl. 8-490.000.
Patent-Treuhand-Gesellschaft fur elektrische Gluhlampen m.b.H.: *See—*
Kiesel, Rolf; and Gaugel, Manfred, 4,302,698, Cl. 313-222.000.
Paterson Products Limited: *See—*
Ashton, George W.; Manning, Peter; and Lee, Horace G., 4,302,092, Cl. 354-307.000.
Patil, Bahgaunda; Przyhylinski, Phillip G.; and Sims, Roger D., to Pullman Incorporated. Partition sheet to side sheet connection for covered hopper cars. 4,301,742, Cl. 105-406.00R.
Paul, James M., to Mobil Oil Corporation. Yellowcake processing in uranium recovery. 4,302,428, Cl. 423-16.000.
Paul, Lowell A.; and Moss, Alan. Tree shear. 4,301,845, Cl. 144-34.00E.
Paul Masson, Inc.: *See—*
Lunt, James W., 4,302,476, Cl. 426-231.000.
Pawlik, Rudolf: *See—*
Poth, Leonhard; Hildebrandt, Peter; Pawlik, Rudolf; and Klett, Horst, 4,302,656, Cl. 219-137.0PS.
Payer, Wolfgang: *See—*
Bahadir, Mufit; and Payer, Wolfgang, 4,302,567, Cl. 526-159.000.
Payne, George T.; and Eakin, Gerald R., to National Machinery Company, The. Supported knockout pin assembly for forging machines or the like. 4,301,671, Cl. 72-344.000.
Payne, James R., to General Motors Corporation. Sump level maintenance system. 4,301,824, Cl. 137-110.000.
Peachtree Doors, Inc.: *See—*
Dunsmoor, Forrest L., 4,301,622, Cl. 49-342.000.
Peal, Clayton E.: *See—*
Goldstone, Edward G.; and Peal, Clayton E., 4,301,763, Cl. 118-308.000.
Peanut Research and Testing Laboratories, Inc.: *See—*
Harris, Hubert, 4,302,111, Cl. 366-107.000.
Pearce, Jai K.: *See—*
Sieckman, Walter; Pearce, Jai K.; and Schempp, Eberhard G., 4,302,244, Cl. 75-60.000.
Pech, Hans-Jurgen; and Schafer, Herbert, to Deutsche Babcock Aktiengesellschaft. Deasher. 4,301,746, Cl. 110-165.00R.
Pedersen, Frode: *See—*
Laugerud, Sverre; Etnestad, Herman; and Pedersen, Frode, 4,301,748, Cl. 110-245.000.
Peelle Company, The: *See—*
Heisler, William C., 4,302,145, Cl. 414-608.000.
Peer, Lydia; and Mayer, Joseph, to Schering Corporation. Process for nitrating anilides. 4,302,599, Cl. 564-146.000.
Peers-Trevarton, Charles A.; Tarjan, Peter P.; Vadas, Stephen F.; and Dorman, Frederick S., to Cordis Corporation. Cardiac pacer connector system. 4,301,805, Cl. 128-419.00P.

Pekh, Anatoly K.: *See—*
- Lunev, Evgeny I.; Leonov, Alexandr P.; Kosyreva, Nina P.; Kosyrev, Felix K.; Timofeev, Valery A.; Pekh, Anatoly K.; Kononykhin, Alexei S.; and Artamonov, Alexei V., 4,301,680, Cl. 73-190.0EW.

Pellet, Regis J.; and Bertolacini, Ralph J., to Standard Oil Company (Indiana). Reforming with an improved platinum-containing catalyst. 4,302,358, Cl. 252-441.000.

Pelletier, Jean F. S. Lamp means with orientable modular elements. 4,302,800, Cl. 362-250.000.

Peltsman, Israel D.: *See—*
- Peltsman, Michael I.; and Peltsman, Israel D., 4,302,171, Cl. 425-140.000.

Peltsman, Michael I.; and Peltsman, Israel D. Level control for ceramic slurry working tank in ceramic hot molding machine. 4,302,171, Cl. 425-140.000.

Pence, Valerie C.: *See—*
- Janick, Jules; and Pence, Valerie C., 4,301,619, Cl. 47-58.000.

Penman, Bruce W.: *See—*
- Skopek, Thomas R.; Liber, Howard L.; Penman, Bruce W.; Thilly, William G.; and Hoppe, Henry, IV, 4,302,535, Cl. 435-6.000.

Pennant Products, Inc.: *See—*
- Lewinger, Nathan; and Bhowmik, Santi R., 4,301,718, Cl. 99-359.000.

Pennsylvania Engineering Corporation: *See—*
- Sieckman, Walter; Pearce, Jai K.; and Schempp, Eberhard G., 4,302,244, Cl. 75-60.000.

Pennwalt Corporation: *See—*
- Buchholz, Bernard; and Dzierza, Edward J., 4,302,605, Cl. 568-60.000.
- Sandler, Stanley R.; and Chen, Mabel M., 4,302,340, Cl. 252-609.000.

Penny, Robert N., to Caterpillar Tractor Co. Gas turbine combustion chamber. 4,301,657, Cl. 60-748.000.

Pennzoil Company: *See—*
- Kidwell, Louis E., Jr.; and Holcomb, Dysart E., 4,302,255, Cl. 106-275.000.

Peppel, Jon H., to Clark Equipment Company. Transmission control system. 4,301,689, Cl. 74-336.00R.

Pepper, William, Jr., to Peptek, Incorporated. Video game apparatus and method. 4,302,011, Cl. 273-85.00G.

Peptek, Incorporated: *See—*
- Pepper, William, Jr., 4,302,011, Cl. 273-85.00G.

Perales, Gavino R. Combined aquatic support and propulsion device. 4,302,194, Cl. 440-13.000.

Percarpio, Edward P., to Becton, Dickinson and Company. Cannula pierceable self-sealing closure. 4,301,936, Cl. 215-247.000.

Peregrim, Frank; Johnson, James B.; and Winkler, Gerhard B., to United States of America, Navy. Case mounted mooring system. 4,301,734, Cl. 102-413.000.

Peri-Werk Artur Schworer KG: *See—*
- Schworer, Artur, 4,301,990, Cl. 249-44.000.

Perkin-Elmer Corporation, The: *See—*
- Nester, James F., 4,302,316, Cl. 204-224.00R.

Perkins, Martin P., Jr.: *See—*
- Grondin, Edward A.; Tulloch, Lawrence R.; Perkins, Martin P., Jr.; Krstovic, Alexander P.; McCoy, Bryon W.; and Morey, Kevin P., 4,301,602, Cl. 34-43.000.

Pero, Richard E., to Dow Chemical Company, The. Method and apparatus for use with plastic lined pipe. 4,302,183, Cl. 432-225.000.

Perronin, Jean; and Dessaint, Andre L., to Produits Chimiques Ugine Kuhlmann. Fluorinated products intended for oilproofing and waterproofing treatments of various materials and more particularly of fibrous materials. 4,302,366, Cl. 252-8.570.

Perry, Edward H., Jr. Self-cleaning oven control system. 4,302,661, Cl. 219-398.000.

Persson, Anders E., to Sandvik Aktiebolag. Wedgingly mounted tool holder or adapter for a cutting head. 4,302,055, Cl. 299-93.000.

Persson, Bertil. Moulding machine. 4,302,173, Cl. 425-192.00R.

Pesenacker, Manfred: *See—*
- Hunger, Klaus; and Pesenacker, Manfred, 4,302,388, Cl. 260-157.000.
- Hunger, Klaus; and Pesenacker, Manfred, 4,302,389, Cl. 260-157.000.

Peters, Arnold L.: *See—*
- Fry, Harold E.; and Peters, Arnold L., 4,301,761, Cl. 114-331.000.

Peterson, David: *See—*
- Halle, Reidar; and Peterson, David, 4,302,569, Cl. 526-231.000.

Peterson, Ronald W.; and Jennie, Fred, to Weatherby, Inc. Trigger assembly for bolt action pistols. 4,301,609, Cl. 42-69.00A.

Petitpierre, Jean C.: *See—*
- Garner, Robert; and Petitpierre, Jean C., 4,302,393, Cl. 260-335.000.

Petri, Walter: *See—*
- Bickel, Martin; Geiger, Rolf; Leeb, Richard; and Petri, Walter, 4,302,448, Cl. 424-177.000.

Petrolite Corporation: *See—*
- Scherubel, Gary A.; and Thorne, Michael A., 4,301,868, Cl. 166-308.000.
- Watson, Frederick D.; Mayse, Weldon D.; and Franse, Albert D., 4,302,310, Cl. 204-186.000.

Petters, Willi: *See—*
- Menne, Rolf; and Petters, Willi, 4,301,735, Cl. 102-427.000.

Petuch, Andrew J., to AMP Incorporated. Separating reeled coils. 4,301,921, Cl. 206-330.000.

Pez, Guido P., to Allied Chemical Corporation. Producing alkylamines from olefins with alkali metal amide catalyst. 4,302,603, Cl. 564-485.000.

Pfefferkorn, Herbert. Installation for the recovery of methane gas from organic waste. 4,302,329, Cl. 210-97.000.

Pfeil, Janice L.: *See—*
- Kukolja, Stjepan; and Pfeil, Janice L., 4,302,391, Cl. 260-239.00A.

Pfizer Inc.: *See—*
- LaMattina, John L.; and Lipinski, Christopher A., 4,302,464, Cl. 424-263.000.
- Rodway, Jack L., 4,301,998, Cl. 266-281.000.

Pfohl, Rainer; Grtischke, Martin; and Schubert, Jurgen, to Metallgesellschaft Aktiengesellschaft. Apparatus for metering and/or distributing liquid media. 4,302,338, Cl. 210-752.000.

Pharmasol Corporation, The: *See—*
- Palson, Richard C.; and Armstrong, John C., 4,301,949, Cl. 222-548.000.

Philip Morris Incorporated: *See—*
- Keritsis, Gus D., 4,301,817, Cl. 131-297.000.
- Keritsis, Gus D., 4,302,308, Cl. 204-180.00P.

Phillips, Barry A.; Spitler, Keith G.; and Keegan, Richard E., to Mobay Chemical Corporation. Process for heat sealing polyurethane foam. 4,302,272, Cl. 156-309.900.

Phillips Cables Limited: *See—*
- Beach, Shirley, 4,302,410, Cl. 264-45.900.

Phillips Petroleum Company: *See—*
- Anderson, John E., 4,302,229, Cl. 62-21.000.
- Cheng, Paul J.; and Mills, King L., 4,302,423, Cl. 422-111.000.
- Hitzman, Donald O., 4,302,542, Cl. 435-247.000.
- Kraft, Donald L., 4,301,941, Cl. 220-306.000.
- Marwil, Stanley J., 4,302,604, Cl. 564-491.000.
- Nash, Larry L., 4,302,576, Cl. 528-500.000.
- Naylor, Floyd E., 4,302,559, Cl. 525-271.000.

Physical Systems: *See—*
- Hutter, Charles G., III, 4,302,492, Cl. 428-40.000.

Piccone, James. Furniture device for cats. 4,301,766, Cl. 119-1.000.

Pierce, Percy E.: *See—*
- Becher, David Z.; Christenson, Roger M.; Coalson, Richard L.; Pierce, Percy E.; and Schimmel, Karl F., 4,302,560, Cl. 525-327.000.
- Becher, David Z.; Christenson, Roger M.; Coalson, Richard L.; Pierce, Percy E.; and Schimmel, Karl F., 4,302,561, Cl. 525-327.000.
- Becher, David Z.; Christenson, Roger M.; Coalson, Richard L.; Pierce, Percy E.; and Schimmel, Karl F., 4,302,562, Cl. 525-327.000.

Piguet, Pierre; and Culaud, Andre, to Ateliers des Chamilles S.A. Draft tube for a reaction turbine. 4,302,151, Cl. 415-209.000.

Pilkington's Tiles Limited: *See—*
- Shore, John W.; Eyres, James H.; and Critchley, Kenneth, 4,301,634, Cl. 52-389.000.

Pinchak, Alfred C. Esophageal monitoring apparatus. 4,301,809, Cl. 128-695.000.

Piolat, Christian: *See—*
- Dumont, Alian; Piolat, Christian; and Oeillet, Guy, 4,302,636, Cl. 179-170.0NC.

Pisani, Federico; and Graciotti, Alessandro, to Ing. C. Olivetti & C., S.p.A. Visual display unit and display method for a programmable computer. 4,302,755, Cl. 340-734.000.

Pisaric, Karl H.; Weber, Karl-Arnold; Traubel, Harro; Brauner, Dieter; and Pahl, Manfred H., to Bayer Aktiengesellschaft. Process and apparatus for the mixing and application of reactive materials. 4,302,550, Cl. 521-133.000.

Pitney-Bowes, Inc.: *See—*
- Calabrese, Richard A., 4,302,095, Cl. 355-8.000.
- Eckert, Alton B.; Duwel, C. Edward; and Muller, Arno, 4,302,821, Cl. 364-900.000.

Pittman, Carl R.: *See—*
- Chesnut, Amos E.; and Pittman, Carl R., 4,302,663, Cl. 219-497.000.

Pittman, Johnny M., Jr., to Upjohn Company, The. Use of derivatives of 6α-methylprednisolone as an antiemetic. 4,302,452, Cl. 424-243.000.

Pittway Corporation: *See—*
- Conforti, Frederick J., 4,302,753, Cl. 340-628.000.

Pividor, Enea R.: *See—*
- Harrison, Simon J.; and Pividor, Enea R., 4,301,876, Cl. 175-53.000.

Pla, Jean F.; and Liautaud, Jacques C., to Institut Merieux. Method for concentrating and purifying antihemophilic factor or factor VIII. 4,302,445, Cl. 424-101.000.

Platter, Sanford: *See—*
- Jewitt, James W.; Johnston, Ross W.; and Platter, Sanford, 4,301,687, Cl. 73-862.430.

Pleska, Jean-Pierre: *See—*
- Guillaume, Robert; Pleska, Jean-Pierre; and Indeherbergh, Jean, 4,302,303, Cl. 204-128.000.

Pletscher, Oskar, to Gebruder Pletscher. Luggage carrier for attachment over the front wheel of a bicycle or the like. 4,301,951, Cl. 224-32.00R.

Plough, Stephan E.; and Swartzendruber, David L. Peace officer's equipment bag. 4,301,898, Cl. 190-52.000.

Plummer, Derek: *See—*
- Haskew, Francis A.; Jones, Leslie A.; Morris, Alan R.; Tothfalusi, Miklos; and Plummer, Derek, 4,302,054, Cl. 299-31.000.

Pneumatic Scale Corporation: *See—*
- Albo, Ronald T., 4,301,911, Cl. 198-412.000.

Pobortsev, Mendel E.: *See—*
- Chernogorenko, Vasily B.; Alzhanov, Tleubai M.; Lynchak, Kima A.; Muchnik, Simon V.; Ishkhanov, Evgeny S.; Sergienko, Vladimir Y.; Sapian, Vladimir G.; Koverya, Vladimir M.; Pobortsev, Mendel E.; Markovsky, Evgeny A.; Dmitrenko, Valentina V.; Bykov, Vladimir I.; Kipchakbaev, Alexandr D.; and Vopilov, Alexandr N., 4,302,249, Cl. 75-143.000.

Podszun, Wolfgang: *See—*
- Walkowiak, Michael; Podszun, Wolfgang; Leusner, Bernhard; Suling, Carlhans; and Schulz, Hans H., 4,302,376, Cl. 260-29.7UA.

Pohl, Ludwig: *See—*
- Eidenschink, Rudolf; and Pohl, Ludwig, 4,302,352, Cl. 252-299.630.

Poister, Clarence E. Replaceable filter for deodorizing the air from a toilet bowl. 4,301,555, Cl. 4-217.000.

Polaroid Corporation: *See—*
- Baker, T. Nelson, III; and Zuckerman, Bernard, 4,302,525, Cl. 430-217.000.
- Evans, David H.; and Greenwald, Richard B., 4,302,612, Cl. 568-604.000.
- Johnson, Bruce K.; and Van Allen, David, 4,302,795, Cl. 362-16.000.
- Paglia, Richard, 4,302,634, Cl. 179-111.00R.
- Timson, William J., 4,302,108, Cl. 356-359.000.

Poler, Stanley. Cauterizing tool for ophthalmological surgery. 4,301,802, Cl. 128-303.140.

Polichnowski, Stanley W., to Eastman Kodak Company. Preparation of hydrogen iodide, lithium iodide and methyl iodide. 4,302,432, Cl. 423-487.000.

Polk, Donald E.: *See—*
- Bedell, John R.; Hemmat, Naim; and Polk, Donald E., 4,301,854, Cl. 164-479.000.

Pollack, Charles N. Balloon-tipped extracorporeal cannula apparatus and method for insertion of same. 4,301,797, Cl. 128-214.00R.

Polonsky, Samuel: *See—*
- Boyles, Robert L.; and Polonsky, Samuel, 4,302,695, Cl. 310-324.000.

Polynovus Industries, Inc.: *See—*
- Rodish, John, 4,301,961, Cl. 229-55.000.

Polysar Limited: *See—*
- Gurak, Nur; and Tebbens, Klaas, 4,302,377, Cl. 260-29.7PT.

Pont, Richard S., to Laidlaw, Drew & Co. Ltd. Burner holder with quick release and lockup mechanism. 4,302,179, Cl. 431-189.000.

Ponto, Gene D.: *See—*
- Dimmer, Jerry R.; Ponto, Gene D.; Shorma, Edward F.; Shorma, Richard E.; Shorma, William J.; and Miranowski, Duaine L., 4,302,043, Cl. 296-98.000.

Poole, Johnnie L., to Consolidated Engravers Corporation. Fluid metering roller. 4,301,583, Cl. 29-121.200.

Pope, J. Lee, Jr.; and Scott, James W., to Baxter Travenol Laboratories, Inc. Non-collapsible medical fluid container with air vent filter. 4,301,799, Cl. 128-272.000.

Porcelli, Richard V., to Halcon Research & Development Corp. Preparation of acetaldehyde. 4,302,611, Cl. 568-484.000.

Portage Newspaper Supply Company: *See—*
- Williams, Eric B., 4,302,100, Cl. 355-68.000.

Poschlod, Fridolin, to Schorling GmbH & Co. Waggonbau. Refuse collection devices. 4,301,568, Cl. 15-340.000.

Postupack, Dennis S., to PPG Industries, Inc. Method of treating interlayer material. 4,302,263, Cl. 156-100.000.

Poth, Leonhard; Hildebrandt, Peter; Pawlik, Rudolf; and Klett, Horst, to Linde Aktiengesellschaft. Controlling the operations of an electric arc welder. 4,302,656, Cl. 219-137.0PS.

Potter, Glenn J. Quick and accurate aiming device for aerosol dispenser. 4,301,947, Cl. 222-182.000.

Pounds, Robert B.: *See—*
- Bohorquez, Luis A.; Cleary, Michael M.; Ash, Charles C.; Van Osten, Don E.; Pounds, Robert B.; and Sallach, John H., 4,301,709, Cl. 89-11.000.

Powers, Robert W.; and Mitoff, Stephan P., to General Electric Company. Production of β-alumina ceramic tubes. 4,302,519, Cl. 429-193.000.

Pozzi, Leopoldo, to Costruzioni Meccaniche Leopoldo Pozzi S.p.A. Rotary drum heat exchanger. 4,301,860, Cl. 165-90.000.

PPG Industries, Inc.: *See—*
- Becher, David Z.; Christenson, Roger M.; Coalson, Richard L.; Pierce, Percy E.; and Schimmel, Karl F., 4,302,560, Cl. 525-327.000.
- Becher, David Z.; Christenson, Roger M.; Coalson, Richard L.; Pierce, Percy E.; and Schimmel, Karl F., 4,302,561, Cl. 525-327.000.
- Becher, David Z.; Christenson, Roger M.; Coalson, Richard L.; Pierce, Percy E.; and Schimmel, Karl F., 4,302,562, Cl. 525-327.000.
- Kerr, Thomas P.; and Kreitler, John K., 4,302,042, Cl. 294-67.0AB.
- Kreitler, John K., 4,302,041, Cl. 294-67.0AB.
- Lavanish, Jerome M., 4,302,239, Cl. 71-88.000.
- Michelotti, Donald P., 4,302,417, Cl. 264-322.000.
- Postupack, Dennis S., 4,302,263, Cl. 156-100.000.

Prasad, Ravi S.: *See—*
- Schmitz, Francis J.; van der Helm, Dick; Hossain, M. Bilayet; Gopichand, Yalamanchili; and Prasad, Ravi S., 4,302,470, Cl. 424-283.000.

Pretto, John. Phonograph pickup arm. 4,302,834, Cl. 369-250.000.

Price, Robert, to Kros Konveyors, Inc. Self-propelled receptacle-conveyor backfilling apparatus. 4,301,910, Cl. 198-304.000.

Priesch, Manfred: *See—*
- Weitemeyer, Christian; Kropac, Vaclav; and Priesch, Manfred, 4,302,512, Cl. 428-447.000.

Pritchard, Eric K. Method of minimizing resonance in stepping motor and improved driver therefor. 4,302,712, Cl. 318-490.000.

Procter & Gamble Company, The: *See—*
- Callicott, Robert H., 4,302,350, Cl. 252-174.230.
- Gosset, Pierrette; and Lodewick, Rainer, 4,302,364, Cl. 252-545.000.
- Juneja, Prem S., 4,302,199, Cl. 8-405.000.
- Young, Terrill A., 4,302,282, Cl. 162-111.000.

Produits Chimiques Ugine Kuhlmann: *See—*
- Perronin, Jean; and Dessaint, Andre L., 4,302,366, Cl. 252-8.570.

Profeta, Barry P.; and Shaw, David A., to Olin Corporation. Apparatus and process for analysis of gaseous nitrogen trichloride. 4,302,206, Cl. 23-232.00R.

Pronman, Izmail M.; Antonov, Evgeny I.; Barit, Izrail Y.; Andreev, Anatoly V.; and Kazantsev, Alexandr M. Neutron activation analysis installation. 4,302,285, Cl. 376-159.000.

Przybylinski, Phillip G.: *See—*
- Patil, Babgaunda; Przybylinski, Phillip G.; and Sims, Roger D., 4,301,742, Cl. 105-406.00R.

PTX-Pentronix, Inc.: *See—*
- DeSantis, Raymond P., 4,302,412, Cl. 264-109.000.

Pullman Incorporated: *See—*
- Coccia, Larry, 4,301,928, Cl. 209-587.000.
- Patil, Babgaunda; Przybylinski, Phillip G.; and Sims, Roger D., 4,301,742, Cl. 105-406.00R.

Pupp, Herwig, to Tetra Pak International AB. Reclosable packing container. 4,301,939, Cl. 220-267.000.

Purdue Research Foundation: *See—*
- Janick, Jules; and Pence, Valerie C., 4,301,619, Cl. 47-58.000.

Putman, Thomas H.; and Ramey, Donald G., to Westinghouse Electric Corp. Dynamic parallel inductive stabilizer for synchronous machines having torsional oscillations. 4,302,715, Cl. 323-210.000.

Pye (Electronic Products) Limited: *See—*
- Baker, Stephen J., 4,302,421, Cl. 422-64.000.

Quad Environmental Technologies Corp.: *See—*
- Rafson, Harold J.; and deVries, Egbert, 4,302,226, Cl. 55-238.000.

R. T. Vanderbilt Company, Inc.: *See—*
- Ciullo, Peter A., 4,302,253, Cl. 106-208.000.

Rabinowitz, Paul: *See—*
- Kaldor, Andrew; and Rabinowitz, Paul, 4,302,305, Cl. 204-157.10H.

Rackur, Gerhard; and Hoffmann, Irmgard, to Hoechst Aktiengesellschaft. 4-Aryl-5,6,7,8-tetrahydropyrazolo(3,4-B)-(1,5)diazepine-1H,4H-5,7-diones and medicaments containing same. 4,302,468, Cl. 424-273.00B.

Radar Companies, Inc.: *See—*
- Smith, William C., 4,301,930, Cl. 209-671.000.

Rafson, Harold J.; and deVries, Egbert, to Quad Environmental Technologies Corp. Apparatus for neutralizing odors. 4,302,226, Cl. 55-238.000.

Ramey, Donald G.: *See—*
- Putman, Thomas H.; and Ramey, Donald G., 4,302,715, Cl. 323-210.000.

Rampe, John F., to Rampe Research. Bowl-type vibratory finishing machine. 4,301,625, Cl. 51-163.200.

Rampe Research: *See—*
- Rampe, John F., 4,301,625, Cl. 51-163.200.

Randall, Richard A.; and Close, George M. Clip-on ledger book identifier. 4,302,032, Cl. 281-29.000.

Rasmussen, Robert F.: *See—*
- Evans, Richard A.; and Rasmussen, Robert F., 4,302,033, Cl. 285-14.000.

Rauhut, Klaus: *See—*
- Hesse, Wolfgang; Lorentz, Guido; and Rauhut, Klaus, 4,302,380, Cl. 260-38.000.

Raytheon Company: *See—*
- Kasevich, Raymond S.; Kolker, Myer; and Dwyer, Arthur S., 4,301,865, Cl. 166-248.000.

RB Products Corporation: *See—*
- Kupperman, Sam; and Kupperman, Dennis, 4,301,942, Cl. 220-444.000.

RCA Corporation: *See—*
- Faith, Thomas J., Jr., 4,302,498, Cl. 428-209.000.
- Harwood, Leopold A., 4,302,792, Cl. 361-92.000.
- Howard, Thomas B., Jr., 4,302,273, Cl. 156-345.000.
- Mattson, Glenn A., 4,301,976, Cl. 242-55.19A.
- McNeely, Michael L., 4,302,175, Cl. 425-385.000.
- Nubani, Jawdat I., 4,302,725, Cl. 324-404.000.
- Rudy, William G., 4,302,063, Cl. 316-25.000.
- Schade, Otto H., Jr., 4,302,718, Cl. 323-313.000.

Reabe, Kenneth G.; Dressler, Hans; and Covelli, Frederick M., to Koppers Company, Inc. Process for reacting sulfuric acid and an aromatic hydrocarbon to purify a disulfonic acid product of an aromatic hydrocarbon. 4,302,403, Cl. 260-505.00E.

Redikultsev, Jury V.; Litvinenko, Leonid A.; and Sedov, Valery A. Apparatus for chemical froth suppression in a fermenter. 4,302,545, Cl. 435-289.000.

Redken Laboratories, Inc.: *See—*
- Cannell, David W.; and Hawkins, Geoffrey R., 4,301,820, Cl. 132-7.000.

Reed, Michael A., to Koolatron Industries, Ltd. Control circuitry for thermoelectric cooler. 4,301,658, Cl. 62-3.000.

Reed, Ronald H.: *See—*
Cox, Russell; Drilling, Joseph C.; and Reed, Ronald H., 4,302,643, Cl. 200-144.00R.
Refrigeration Engineering Corporation: *See—*
Martin, Walter H.; Briley, George C.; and Pao, Peter Y. M., 4,301,659, Cl. 62-57.000.
Regenerative Environmental Equipment Co., Inc.: *See—*
Benedick, Edward H., 4,302,426, Cl. 422-173.000.
Regie Nationale des Usines Renault: *See—*
Carre, Jean C.; and Maistrelli, Roger, 4,301,870, Cl. 172-7.000.
Dera, Alain; and Itey-Bernard, Georges, 4,301,882, Cl. 180-153.000.
Reiher, John H. Reciprocating piston machine. 4,301,695, Cl. 74-602.000.
Reinhard, Fred J.: *See—*
Johnson, Anderson F., Jr.; and Reinhard, Fred J., 4,302,134, Cl. 406-51.000.
Reinheimer, Guter; and Leiter, Herbert, to Ernst Leitz Wetzlar GmbH. Microscope attachment camera. 4,302,087, Cl. 354-79.000.
Renz, Heinz, to Dr. Ing. h.c.F. Porsche AG. Vehicle lock arrangement. 4,301,668, Cl. 70-422.000.
Requejo, Luz P., to Drackett Company, The. Hard surface cleaning compositions. 4,302,348, Cl. 252-135.000.
Research Corporation: *See—*
Schmitz, Francis J.; van der Helm, Dick; Hossain, M. Bilayet; Gopichand, Yalamanchili; and Prasad, Ravi S., 4,302,470, Cl. 424-283.000.
Reson System ApS: *See—*
Steenstrup, Per R., 4,302,112, Cl. 366-114.000.
Revel, Michel; Kimchi, Adi; Shulman, Lester; and Wallach, David, to Yeda Research & Development Co. Ltd. Novel assays for interferon. 4,302,533, Cl. 435-4.000.
Rexnord Inc.: *See—*
Michalik, Anthony J.; Thiel, Peter L.; Elson, Ronald D.; and Palmer, James A., 4,301,915, Cl. 198-851.000.
Reyes, Renato D.: *See—*
Finlayson, James W.; Reyes, Renato D.; Eberle, Ralph F.; Wojcik, Thaddeus A.; Gumbert, James L.; McKeever, Robert B.; Nagy, Emery E.; and Houserman, Howard E., Jr., 4,302,146, Cl. 414-744.00R.
Rhone-Poulenc Industries: *See—*
Locatelli, Jean-Louis; and Robin, Jean, 4,302,572, Cl. 528-73.000.
Rhone-Poulenc Textile: *See—*
Cerutti, Claude; Goletto, Jean; Habault, Robert; and Vaginay, Yves, 4,302,507, Cl. 428-373.000.
Ribka, Joachim: *See—*
Nagl, Gert; Ribka, Joachim; Gotsmann, Ulrich; and Dickmanns, Heinz, 4,302,582, Cl. 544-37.000.
Ribnitz, Peter; Giesinger, Hans; and Buschor, Karl, to Gema AG. Spray method and spray device, particularly for the spray-coating of articles with powder. 4,302,481, Cl. 427-27.000.
Ricci, Louis N.: *See—*
Maier, Alfred E.; Ricci, Louis N.; and Haugh, Charles E., 4,302,740, Cl. 335-21.000.
Rice, Billy J.: *See—*
Murthy, Rajam R.; and Rice, Billy J., 4,301,827, Cl. 137-207.000.
Rice, Frederick H., to Fred Rice Productions, Inc. Solar heat collector. 4,301,787, Cl. 126-429.000.
Richardson-Merrell Inc.: *See—*
Harrison, Boyd L.; and Dolfini, Joseph E., 4,302,581, Cl. 544-27.000.
Ricoh Company, Ltd.: *See—*
Hashimoto, Hideo, 4,302,002, Cl. 271-272.000.
Ikeda, Kunio, 4,301,585, Cl. 29-157.00C.
Riedel-de Haen Aktiengesellschaft: *See—*
Dannenberg, Wolfgang; Heyer, Walter; Doldissen, Theo; and Zimmermann, Manfred, 4,302,614, Cl. 568-641.000.
Rigotti, James M.: *See—*
May, Dean S.; and Rigotti, James M., 4,302,116, Cl. 400-124.000.
Riihinen, Jaakko, to Valmet Oy. Roller magnetically compensated and adjusted for deflection. 4,301,582, Cl. 29-116.0AD.
Rinehart, William D.: *See—*
Jaffe, Erwin; Matalia, Harshad; Rinehart, William D.; Warner, Frederick L.; Navi, Menashe; and Merker, George, 4,301,728, Cl. 101-220.000.
Rissler, Kaj: *See—*
Kivikas, Toivelemb; Rissler, Kaj; Rynell, Dag; and Skoog, Malte, 4,301,864, Cl. 165-167.000.
Ritter, Alfred; and Kleinwachter, Jurgen, to Max-Planck-Gesellschaft zur Forderung der Wissenschaften e.V. Heat collector system. 4,301,965, Cl. 237-2.00B.
Ritter, Kent E., to Air Preheater Company, Inc., The. Header pipe attachment. 4,302,228, Cl. 55-302.000.
Riviere, Charles E. F., to Comex Industries. Craft with at least two hulls. 4,301,758, Cl. 114-61.000.
Robertshaw Controls Company: *See—*
Weaver, Marvin P., 4,301,586, Cl. 29-157.10R.
Robin, Jean: *See—*
Locatelli, Jean-Louis; and Robin, Jean, 4,302,572, Cl. 528-73.000.
Rock, John D.: *See—*
Garnett, John L.; and Rock, John D., 4,302,522, Cl. 430-133.000.
Rockwell International Corporation: *See—*
Bruene, Warren B., 4,302,844, Cl. 375-58.000.
Hallford, Ben R., 4,302,739, Cl. 333-204.000.
Heimbigner, Gary L., 4,302,765, Cl. 357-23.000.
Pancholy, Ranjeet K.; and Drouet, Rene, 4,302,278, Cl. 156-610.000.
Thompson, Robert B.; Vasile, Carmine F.; and Houston, Roger B., 4,301,684, Cl. 73-602.000.
Rodish, John, to Polynovus Industries, Inc. Plastic reinforced paper and bag made thereof. 4,301,961, Cl. 229-55.000.
Rodway, Jack L., to Pfizer Inc. Vertical gunning apparatus with television monitor. 4,301,998, Cl. 266-281.000.
Roepke, Wallace W.; and Wilson, Richard J., to United States of America, Interior. Mounting block to rotate coal cutter bits. 4,302,053, Cl. 299-86.000.
Rogers Corporation: *See—*
Howe, David M.; Otto, Jeffrey B.; and Traskos, Richard T., 4,302,413, Cl. 264-126.000.
Rohm, Gunter H. Nonloosening chuck. 4,302,021, Cl. 279-60.000.
Rohm and Haas Company: *See—*
Clovis, James S., 4,302,548, Cl. 521-28.000.
Miller, George A.; and Weiler, Ernest D., 4,302,240, Cl. 71-090.000.
Rohner, Thomas G., to Submergible Oil Systems, Inc. Electronic cooling. 4,302,793, Cl. 361-385.000.
Roline, Glenn M.: *See—*
Thompson, David L.; Duggan, Stephen R.; and Roline, Glenn M., 4,301,804, Cl. 128-419.0PG.
Rolls-Royce Limited: *See—*
Tubbs, Henry, 4,302,148, Cl. 415-115.000.
Tubbs, Henry, 4,302,153, Cl. 416-96.00R.
Roman, Walter C., to Ultimate Resources, Inc. Composting system used in scrubbing gas effluvia. 4,302,236, Cl. 71-9.000.
Roosov, Alfred K.: *See—*
Fankhanel, Martin O.; and Roosov, Alfred K., 4,302,177, Cl. 431-11.000.
Rosenberger, Dieter: *See—*
Schiffner, Gerhard; and Rosenberger, Dieter, 4,302,107, Cl. 356-350.000.
Rosenblum, Arthur B. Runway and obstacle detector to improve airplane landing. 4,302,827, Cl. 367-116.000.
Rosenkranz, Hans J., to Bayer Aktiengesellschaft. Polymers crosslinkable by electron beams. 4,302,484, Cl. 427-44.000.
Rothwell, Harold L., Jr.: *See—*
Keeffe, William M.; and Rothwell, Harold L., Jr., 4,302,699, Cl. 313-229.000.
Roussel Uclaf: *See—*
Mendy, Francois; Blain, Sylvain; and Domer, Roland, 4,302,477, Cl. 426-250.000.
Rowe, Richard A., to General Electric Company. Flood control for a dishwasher. 4,301,829, Cl. 137-387.000.
Rubner, Roland: *See—*
Ahne, Hellmut; Aulich, Hubert; Weidinger, Friedrich; and Rubner, Roland, 4,302,233, Cl. 501-3.430.
Rucker, Perry G., to Biomed Research Inc. Process for preparing CSA or CSC. 4,302,577, Cl. 536-118.000.
Rudelick, John, to Milwaukee Faucets, Inc. Mixing faucet valve with diverter and anti-syphoning means. 4,301,972, Cl. 239-443.000.
Rudolf, Guy; and Frau, Giuliano. Method and apparatus for molding polyurethane soles for footwear. 4,302,416, Cl. 264-244.000.
Rudy, William G., to RCA Corporation. Method for vaporizing getter material in a vacuum electron tube. 4,302,063, Cl. 316-25.000.
Ruff, David L.; and Nath, N. Gokul, to Grefco, Inc. Loose-fill, thermal insulation. 4,302,344, Cl. 252-62.000.
Ruhrchemie Aktiengesellschaft: *See—*
Bahadir, Mufit; and Payer, Wolfgang, 4,302,567, Cl. 526-159.000.
Ruiz, Michel: *See—*
Akrich, Charles; Lemaire, Jean C.; Maillard, Michel J.; and Ruiz, Michel, 4,302,628, Cl. 179-1.50S.
Rumfola, Ross E., to Eastman Kodak Company. Method and apparatus for admixing photographic processing compositions. 4,302,113, Cl. 366-150.000.
Runck, Walter A.: *See—*
Heurich, Charles R.; and Runck, Walter A., 4,301,730, Cl. 101-348.000.
Rundberg, Sten I.: *See—*
Burton, Robert S.; Rundberg, Sten I.; Vaughn, James V.; Williams, Thomas P.; and Benson, Gregory C., 4,301,866, Cl. 166-260.000.
Rupilius, Wolfgang: *See—*
Giede, Wolfgang; Koch, Karlheinz; Kolaczinski, Gerhard; Rupilius, Wolfgang; and Stein, Werner, 4,302,354, Cl. 252-392.000.
Rushforth, Calvin, to Kennecott Corporation. Oscillating mold casting apparatus. 4,301,857, Cl. 164-416.000.
Russell, David E. Elastic typing medium for reduction of message size. 4,302,513, Cl. 428-492.000.
Russial, Joseph F.: *See—*
Wadhwani, Romesh T.; and Russial, Joseph F., 4,302,750, Cl. 340-870.020.
Ryan, Paul T.: *See—*
McSparran, Lloyd W.; Ryan, Paul T.; and Smith, Russell M., 4,301,899, Cl. 191-3.000.
Ryder, Francis E.; and Thomas, Michael D., to Ryder International Corporation. Contact lens aseptor. 4,302,664, Cl. 219-504.000.
Ryder International Corporation: *See—*
Ryder, Francis E.; and Thomas, Michael D., 4,302,664, Cl. 219-504.000.
Ryham, Rolf, to AB Rosenblads Patenter. Method for producing pulp. 4,302,281, Cl. 162-30.00K.
Rynell, Dag: *See—*
Kivikas, Toivelemb; Rissler, Kaj; Rynell, Dag; and Skoog, Malte, 4,301,864, Cl. 165-167.000.

S. C. Johnson & Son, Inc.: *See—*
Hagarty, John D., 4,302,615, Cl. 568-652.000.
S. J. Electro Systems, Inc.: *See—*
Johnston, Stephen P., 4,302,641, Cl. 200-84 00R.
S.R.M. Hydromekanik Aktiebolag: *See—*
Ahlen, Karl G., 4,301,904, Cl. 192-70.120.
Saari, Walfred S.: *See—*
Huff, Joel R.; King, Stella W.; and Saari, Walfred S., 4,302,455, Cl. 424-250.000.
Sado, Ryoichi; Okamoto, Takekuni; and Matumoto, Shigeru, to Shin-Etsu Polymer Co., Ltd. Key-board switch unit. 4,302,648, Cl. 200-159.00B.
Saegusa, Nobuaki; and Terauchi, Kiyoshi, to Sankyo Electric Company Limited. Refrigerant compressor units. 4,301,716, Cl. 92-71.000.
Saga, Koichi: *See—*
Hiki, Toshio; and Saga, Koichi, 4,301,725, Cl. 101-93.140.
Saiers, Timothy L.: *See—*
Jukkola, Walfred W.; Leon, Albert M.; Van Dyk, Garritt C., Jr.; McCoy, Daniel E.; Fisher, Barry L.; Saiers, Timothy L.; and Karstetter, Marlin E., 4,301,771, Cl. 122-4.00D.
Saint Georges Chaumet, Bertrand, to Intrama S.A. Device for depositing a pasty substance on a surface automatically and automatic machine therefor. 4,301,698, Cl. 81-468.000.
St. Jean, Patricia M.: *See—*
St. Jean, Richard P.; and St. Jean, Patricia M., 4,301,893, Cl. 184-24.000.
St. Jean, Richard P.; and St. Jean, Patricia M. Lantern rings. 4,301,893, Cl. 184-24.000.
Saipem S.p.A.: *See—*
Cassone, Giorgio; and Scolari, Franco, 4,301,760, Cl. 114-144.00B.
Saito, Kimiharu, to Iwatsu Electric Co., Ltd. Postacceleration cathode ray tube with a scan expansion lens. 4,302,704, Cl. 315-17.000.
Saito, Syuichiro: *See—*
Kiuchi, Masayoshi; Date, Nobuaki; and Saito, Syuichiro, 4,302,090, Cl. 354-234.000.
Saito, Toshihisa: *See—*
Harase, Toshikatsu; Saito, Toshihisa; and Inoue, Nobuyoshi, 4,302,091, Cl. 354-246.000.
Saito, Toshio: *See—*
Hayakawa, Noboru; Furusato, Akaru; Saito, Toshio; and Iwai, Tastuyuki, 4,302,332, Cl. 210-369.000.
Saitoh, Jun; Fujii, Kenzo; Nakagawa, Toshimi; Honda, Tadatoshi; Mitsuishi, Takatoshi; and Itoh, Hiroshi, to Mitsui Toatsu Chemicals Incorporated. Process for the purification of an aqueous acrylamide solution. 4,302,600, Cl. 564-206.000.
Sakai, Shinji: *See—*
Suzuki, Ryoichi; Uchiyama, Takashi; Murakami, Hiroyasu; Kawamura, Masaharu; Sakai, Shinji; and Momiyama, Kikuo, 4,302,086, Cl. 354-53.000.
Sakanishi, Akihiro: *See—*
Ueda, Kenji; and Sakanishi, Akihiro, 4,302,304, Cl. 204-130.000.
Sakka, Hideo: *See—*
Katsuragawa, Kanzi; Sakka, Hideo; and Kihara, Keiichi, 4,302,306, Cl. 204-158.0HA.
Sallach, John H.: *See—*
Bohorquez, Luis A.; Cleary, Michael M.; Ash, Charles C.; Van Osten, Don E.; Pounds, Robert B.; and Sallach, John H., 4,301,709, Cl. 89-11.000.
Salvati, Renato. Pump operating mechanisms. 4,301,688, Cl. 74-37.000.
Salzberg, Edward. Microwave hybrid couplers. 4,302,733, Cl. 333-101.000.
Sammons, Barry E.: *See—*
Struger, Odo J.; Schultz, Ronald E.; and Sammons, Barry E., 4,302,820, Cl. 364-900.000.
Sanchez Montero, Fernando R.: *See—*
Alvarez Berenguer, Antonio; Sanchez Montero, Fernando R.; and Aragon Martinez, Juan J., 4,302,594, Cl. 556-425.000.
Sandard Conveyor Company: *See—*
Krammer, Robert, deceased, 4,301,914, Cl. 198-781.000.
Sandler, Stanley R.; and Chen, Mabel M., to Pennwalt Corporation. Flame retardant polyol compositions and their preparation. 4,302,340, Cl. 252-609.000.
Sandow, Kiyoshi. Multipurpose container. 4,301,841, Cl. 141-98.000.
Sandvik Aktiebolag: *See—*
Persson, Anders E., 4,302,055, Cl. 299-93.000.
Sangamo Weston, Inc.: *See—*
Mussatt, Thomas J., 4,302,784, Cl. 360-71.000.
Mussatt, Thomas J., 4,302,785, Cl. 360-72.100.
Sankyo Electric Company Limited: *See—*
Saegusa, Nobuaki; and Terauchi, Kiyoshi, 4,301,716, Cl. 92-71.000.
Shirai, Isamu, 4,301,906, Cl. 192-84.00C.
Sano, Hirosi: *See—*
Haruta, Masatake; Sano, Hirosi; and Nakamura, Tomizo, 4,302,360, Cl. 252-471.000.
Sano, Takezo; Inoue, Haruo; and Furuta, Akihiro, to Sumitomo Chemical Company, Limited. Process for producing photo-curable composite materials useful for preparing stencils. 4,302,528, Cl. 430-273.000.
Sanz, Franz: *See—*
Wilks, Gerhard; Grossmann, Gunter; and Sanz, Franz, 4,302,124, Cl. 403-391.000.
Sapian, Vladimir G.: *See—*
Chernogorenko, Vasily B.; Alzhanov, Tleubai M.; Lynchak, Kima A.; Muchnik, Simon V.; Ishkhanov, Evgeny S.; Sergienko, Vladimir Y.; Sapian, Vladimir G.; Koverya, Vladimir M.; Pobortsev, Mendel E.; Markovsky, Evgeny A.; Dmitrenko, Valentina V.; Bykov, Vladimir I.; Kipchakbaev, Alexandr D.; and Vopilov, Alexandr N., 4,302,249, Cl. 75-143.000.
Sasaki, Noriaki: *See—*
Kawaguchi, Takeyuki; Taketani, Yutaka; Sasaki, Noriaki; Minematsu, Hiroyoshi; Hayashi, Yuzuru; and Hara, Shigeyoshi, 4,302,336, Cl. 210-654.000.
Sasaki, Tohru: *See—*
Endo, Hiroyuki; Ohhira, Hirosi; and Sasaki, Tohru, 4,302,556, Cl. 525-199.000.
Satake Engineering Co., Ltd.: *See—*
Satake, Toshihiko, 4,301,931, Cl. 209-691.000.
Satake, Toshihiko, to Satake Engineering Co., Ltd. Grain sorter. 4,301,931, Cl. 209-691.000.
Satake, Yoshikatsu: *See—*
Ohya, Masaki; Kobayashi, Akio; Ogiwara, Takeo; and Satake, Yoshikatsu, 4,302,558, Cl. 525-218.000.
Sato, Akimune; and Tsuchida, Tsuyoshi, to Kawasaki Steel Corporation. Method of marking hot material. 4,301,726, Cl. 101-129.000.
Sato, Akira; and Isobe, Takashi, to Canon Kabushiki Kaisha. Bayonet device for lens barrel. 4,302,077, Cl. 350-257.000.
Sato, Akira: *See—*
Hirata, Tadashi; Hashimoto, Yukio; Ogasa, Takehiro; Kobayashi, Shigeru; Sato, Akira; Sato, Kiyoshi; and Takasawa, Seigo, 4,302,540, Cl. 435-119.000.
Sato, Kiyoshi: *See—*
Hirata, Tadashi; Hashimoto, Yukio; Ogasa, Takehiro; Kobayashi, Shigeru; Sato, Akira; Sato, Kiyoshi; and Takasawa, Seigo, 4,302,540, Cl. 435-119.000.
Sato Kogyo Kabushiki Kaisha: *See—*
Ogawa, Taihei; Kubota, Seizo; Murata, Mineo; and Sekita, Shigeru, 4,302,132, Cl. 405-269.000.
Sato, Masao: *See—*
Abe, Ryouichi; Sato, Masao; and Kikuma, Seiji, 4,302,247, Cl. 75-122.000.
Savin Corporation: *See—*
Landa, Benzion, 4,302,093, Cl. 355-3.0TR.
Sawano, Tsuyotake: *See—*
Yoshino, Tetsuo; Sawano, Tsuyotake; and Takeuchi, Tokuo, 4,302,687, Cl. 307-252.00G.
Scardapane, Anthony N., to Molins Machine Company, Inc. Single faced corrugated web thickness sensing apparatus. 4,301,598, Cl. 33-147.00L.
Scarola, Leonard S.: *See—*
Miller, John C.; Burnett, Archibald L.; and Scarola, Leonard S., 4,302,409, Cl. 264-45.900.
Scarzello, John F.; Lenko, Daniel S.; Krall, Albert D.; Grine, Wayne R.; Brown, Robert E.; Usher, George W.; Mills, Milton K.; and Syeles, Albert M., to United States of America, Navy. Self-powered vehicle detection system. 4,302,746, Cl. 340-38.00L.
Schade, Otto H., Jr., to RCA Corporation. Reference potential generating circuits. 4,302,718, Cl. 323-313.000.
Schaefer, John O., to International Business Machines Corporation. Typewriter cartridge and feed mechanism therefor. 4,302,118, Cl. 400-208.000.
Schafer, Herbert: *See—*
Pech, Hans-Jurgen; and Schafer, Herbert, 4,301,746, Cl. 110-165.00R.
Schedele, Helmut, to Siemens Aktiengesellschaft. Electromagnetic relay with high contact rating and improved insulation. 4,302,742, Cl. 335-202.000.
Scheiding, Uwe: *See—*
Bol, Johannes; Classen, Meinhard; Gunther, Rainer; Hugemann, Bernhard; and Scheiding, Uwe, 4,301,790, Cl. 128-6.000.
Schempp, Eberhard G.: *See—*
Sieckman, Walter; Pearce, Jai K.; and Schempp, Eberhard G., 4,302,244, Cl. 75-60.000.
Schering Corporation: *See—*
Peer, Lydia; and Mayer, Joseph, 4,302,599, Cl. 564-146.000.
Scherubel, Gary A.; and Thorne, Michael A., to Petrolite Corporation. Method using hydrocarbon foams as well stimulants. 4,301,868, Cl. 166-308.000.
Schicketanz, Dieter: *See—*
Havel, Jiri; Schicketanz, Dieter; and Stut, Hans, 4,302,688, Cl. 307-252.00J.
Schiffert, Phillip W., to Magnaflux Corporation. Fluorescent standard for scanning devices. 4,302,678, Cl. 250-461.00R.
Schiffner, Gerhard; and Rosenberger, Dieter, to Siemens Aktiengesellschaft. Interferometer with a coil composed of a single mode waveguide. 4,302,107, Cl. 356-350.000.
Schilling, Wilfried: *See—*
Kicherer, Robert; and Schilling, Wilfried, 4,302,662, Cl. 219-491.000.
Schimanski, Georg. Holder for toilet deodorants. 4,301,556, Cl. 4-231.000.
Schimmel, Karl F.: *See—*
Becher, David Z.; Christenson, Roger M.; Coalson, Richard L.; Pierce, Percy E.; and Schimmel, Karl F., 4,302,560, Cl. 525-327.000.
Becher, David Z.; Christenson, Roger M.; Coalson, Richard L.; Pierce, Percy E.; and Schimmel, Karl F., 4,302,561, Cl. 525-327.000.
Becher, David Z.; Christenson, Roger M.; Coalson, Richard L.; Pierce, Percy E.; and Schimmel, Karl F., 4,302,562, Cl. 525-327.000.

Schimmel, Morry L.; and Young, Don L., Jr., to McDonnell Douglas Corporation. Embedded explosive severance of non-metallic materials. 4,301,707, Cl. 89-1.00B.

Schlaechter, John: *See—*
McCombs, Norman R.; and Schlaechter, John, 4,302,224, Cl. 55-160.000.

Schlichting, Harold E., Jr. Organic waste converter. 4,302,546, Cl. 435-315.000.

Schloemann-Siemag Aktiengesellschaft: *See—*
Engel, Georg; and Spaude, Alfons, 4,301,670, Cl. 72-226.000.

Schlossberg, Howard R.: *See—*
Chiao, Raymond Y.; Fetterman, Harold R.; and Schlossberg, Howard R., 4,302,667, Cl. 250-205.000.

Schlosser, Eric J., to Weber-Stephen Products Co. Piezoelectric igniter apparatus for gas grill. 4,302,181, Cl. 431-264.000.

Schlumberger Technology Corporation: *See—*
Gianzero, Stanley, 4,302,722, Cl. 324-339.000.
Moran, James H., 4,302,723, Cl. 324-343.000.

Schmidgall, Hartzell H., to Hawkeye of Iowa, Ltd. Spacer for reinforced concrete structures. 4,301,638, Cl. 52-687.000.

Schmitt, Walter, to Dr. Johannes Heidenhain GmbH. Variably biased photoelectric circuit. 4,302,668, Cl. 250-209.000.

Schmitz, Francis J.; van der Helm, Dick; Hossain, M. Bilayet; Gopichand, Yalamanchili; and Prasad, Ravi S., to Research Corporation. Acanthifolic acid—new anti-tumor and antibiotic agent. 4,302,470, Cl. 424-283.000.

Schneider, Andre; Cesar, Jean-Pierre; and Gouttebessis, Jacques, to Compagnie Generale des Etablissements Michelin. Process for the manufacture of tires by molding and tires obtained by this process. 4,301,850, Cl. 152-361.00R.

Schneider, Andre: *See—*
Cesar, Jean-Pierre; and Schneider, Andre, 4,302,265, Cl. 156-117.000.

Schneider, Hartmut; and Papp, Alfred, to Siemens Aktiengesellschaft. Process for the production of a glass fiber light waveguide. 4,302,232, Cl. 65-3.120.

Schneider, Marvin L.: *See—*
Cobb, R. Paul; and Schneider, Marvin L., 4,301,713, Cl. 91-46.000.

Schneiderman, Max, to IPCO Hospital Supply Corporation (Whaledent International Division). Electrosurge failsafe system. 4,301,801, Cl. 128-303.140.

Schnipelsky, Paul N.: *See—*
Jakubowicz, Raymond F.; and Schnipelsky, Paul N., 4,302,420, Cl. 422-63.000.

Schoeffler, Romona B.: *See—*
Schoeffler, William N.; and Schoeffler, Romona B., 4,302,022, Cl. 280-43.190.

Schoeffler, William N.; and Schoeffler, Romona B. High-low trailer. 4,302,022, Cl. 280-43.190.

Schoellhorn, Henry, III: *See—*
Gibson, James B.; Boomer, Daryl R.; and Schoellhorn, Henry, III, 4,301,888, Cl. 181-114.000.

Schoengen, Anton; Schreiber, Georg; and Schroeder, Heinz, to Dynamit Nobel Aktiengesellschaft. Process for the preparation of terephthalic acid by the hydrolysis of intermediate stage crude dimethyl terephthalate. 4,302,595, Cl. 562-483.000.

Schoening, Josef: *See—*
Elter, Claus; Stracke, Wilfried; Stach, Heinrich; Schoening, Josef; and Schwiers, Hans G., 4,302,293, Cl. 376-381.000.

Schonfeld, Arnold, and Curley, Joseph M., to Sperry Corporation. Graphic forms overlay apparatus. 4,302,096, Cl. 355-43.000.

Schorling GmbH & Co. Waggonbau: *See—*
Poschlod, Fridolin, 4,301,568, Cl. 15-340.000.

Schreiber, Georg: *See—*
Schoengen, Anton; Schreiber, Georg; and Schroeder, Heinz, 4,302,595, Cl. 562-483.000.

Schroeder, Heinz: *See—*
Schoengen, Anton; Schreiber, Georg; and Schroeder, Heinz, 4,302,595, Cl. 562-483.000.

Schubert, Jurgen: *See—*
Pfohl, Rainer; Grtischke, Martin; and Schubert, Jurgen, 4,302,338, Cl. 210-752.000.

Schultz, Ronald E.: *See—*
Struger, Odo J.; Schultz, Ronald E.; and Sammons, Barry E., 4,302,820, Cl. 364-900.000.

Schultz, William W.: *See—*
Guffey, Larry J.; and Schultz, William W., 4,302,234, Cl. 65-14.000.

Schulz, Hans H.: *See—*
Walkowiak, Michael; Podszun, Wolfgang; Leusner, Bernhard; Suling, Carlhans; and Schulz, Hans H., 4,302,376, Cl. 260-29.7UA.

Schulz, J. Gustav; and Bunting, Pamela M., to Gulf Research & Development Company. Novel single cell protein substrate. 4,302,539, Cl. 435-68.000.

Schulze, Ehrhart, to Steigler, Karl Heinz. Machine for welding a moving web of material by means of a movable welding tool. 4,302,276, Cl. 156-553.000.

Schulze, Stephen R.: *See—*
Tuller, Harold W.; Schulze, Stephen R.; and Mason, Charles D., 4,302,511, Cl. 428-412.000.

Schurfeld, Armin: *See—*
Hartel, Guunter; and Schurfeld, Armin, 4,302,407, Cl. 261-130.000.

Schwarz, Anton. Oil burner. 4,301,966, Cl. 239-75.000.

Schwehr, Gregory D.: *See—*
Kandler, James J.; Basler, Peter H.; and Schwehr, Gregory D., 4,302,647, Cl. 200-159.00B.

Schwiers, Hans G.: *See—*
Elter, Claus; Stracke, Wilfried; Stach, Heinrich; Schoening, Josef; and Schwiers, Hans G., 4,302,293, Cl. 376-381.000.

Schworer, Artur, to Peri-Werk Artur Schworer KG. Formwork panel for concrete walls with wedge-type connections. 4,301,990, Cl. 249-44.000.

Scifres, Donald R.: *See—*
Burnham, Robert D.; Scifres, Donald R.; and Streifer, William, 4,302,729, Cl. 331-94.50H.

Scolari, Franco: *See—*
Cassone, Giorgio; and Scolari, Franco, 4,301,760, Cl. 114-144.00B.

Scott, Dalbert B. Water impervious boot for protecting a surgical cast. 4,301,603, Cl. 36-110.000.

Scott, James W.: *See—*
Pope, J. Lee, Jr.; and Scott, James W., 4,301,799, Cl. 128-272.000.

Sedlock, Thomas. Stud tape measure. 4,301,596, Cl. 33-494.000.

Sedov, Valery A.: *See—*
Redikultsev, Jury V.; Litvinenko, Leonid A.; and Sedov, Valery A., 4,302,545, Cl. 435-289.000.

Sekita, Shigeru: *See—*
Ogawa, Taihei; Kubota, Seizo; Murata, Mineo; and Sekita, Shigeru, 4,302,132, Cl. 405-269.000.

Sekiya, Fukuo: *See—*
Morokawa, Shigeru; Sekiya, Fukuo; Hashimoto, Yukio; Nomura, Yasushi; and Koga, Keiichiro, 4,302,828, Cl. 368-69.000.
Morokawa, Shigeru; Sekiya, Fukuo; Hashimoto, Yukio; Nomura, Yasushi; and Koga, Keiichiro, 4,302,829, Cl. 368-82.000.

Selberg, Johan H. H.: *See—*
Carlsson, Lars C.; and Selberg, Johan H. H., 4,301,927, Cl. 206-622.000.

Selwyn, Stephen L. Method of disclosing dental plaque with D and C Red 33. 4,302,439, Cl. 424-7.000.

Seo, Iwao: *See—*
Ichihara, Shoji; and Seo, Iwao, 4,302,408, Cl. 264-22.000.

Sera, Toshikuni: *See—*
Atsukawa, Masumi; Matsumoto, Kazuhiro; Seto, Toru; Sera, Toshikuni; and Ukawa, Naohiko, 4,302,431, Cl. 423-239.000.

Serber, Stephen L.: *See—*
Mueller, Dale A.; and Serber, Stephen L., 4,301,660, Cl. 62-126.000.

Sergienko, Vladimir Y.: *See—*
Chernogorenko, Vasily B.; Alzhanov, Tleubai M.; Lynchak, Kima A.; Muchnik, Simon V.; Ishkhanov, Evgeny S.; Sergienko, Vladimir Y.; Sapian, Vladimir G.; Koverya, Vladimir M.; Pobortsev, Mendel E.; Markovsky, Evgeny A.; Dmitrenko, Valentina V.; Bykov, Vladimir I.; Kipchakbaev, Alexandr D.; and Vopilov, Alexandr N., 4,302,249, Cl. 75-143.000.

Seri, Tamar: *See—*
Halmann, Mirjam; Velan, Baruch; and Seri, Tamar, 4,302,534, Cl. 435-6.000.

Service Warehouse Company: *See—*
Keller, Lewis C., 4,301,743, Cl. 108-53.100.

Seto, Toru: *See—*
Atsukawa, Masumi; Matsumoto, Kazuhiro; Seto, Toru; Sera, Toshikuni; and Ukawa, Naohiko, 4,302,431, Cl. 423-239.000.

Severs, Stephen B.; and Toll, Harry V. Underwater nuclear power plant structure. 4,302,291, Cl. 376-293.000.

Sexton, Peter: *See—*
DeCristofaro, Nicholas J.; and Sexton, Peter, 4,302,515, Cl. 428-680.000.

Shackleton, Robert A.: *See—*
Smart, Charles A.; and Shackleton, Robert A., 4,301,775, Cl. 123-52.00M.

Shaffer, John W., to GTE Products Corporation. Photoflash lamp. 4,302,182, Cl. 431-362.000.

Shaffer, Robert C., to HITCO. Polymers containing chemically bonded metal atoms. 4,302,392, Cl. 260-326.220.

Shamrin, Vitaly F.: *See—*
Benyaev, Negmat E.; Boskanian, Razmik A.; Yarovenko, Viktor I.; Durbrov, Jury N.; Ustinnikov, Boris A.; Babichenko, Ljudmila V.; Vakulenko, Mikhail D.; Kramarsky, Nikolai A.; Shamrin, Vitaly F.; Karaichev, Sergei I.; Efremov, Boris V.; and Lantsetova, Tatyana N., 4,302,543, Cl. 435-161.000.

Sharbaugh, John E.; and Howarth, Wesley L., to Electric Power Research Institute, Inc. Apparatus for insulating hot sodium in pool-type nuclear reactors. 4,302,296, Cl. 376-290.000.

Sharp Kabushiki Kaisha: *See—*
Aiba, Masahiko, 4,302,762, Cl. 346-75.000.
Nakauchi, Hiroshi; Inami, Yasuhiko; Uede, Hisashi; and Wada, Tomio, 4,302,751, Cl. 340-763.000.
Suzaki, Kazuo; Koda, Hirokazu; Nakamura, Kenichi; Yoshikawa, Syuich; and Ohara, Naoki, 4,301,754, Cl. 112-158.00E.
Yamamoto, Yoichi, 4,302,761, Cl. 346-75.000.

Sharp, Kenneth C. Oxygen lance nozzle. 4,301,969, Cl. 239-132.300.

Shaw, Bon F.; and Marshall, Albert H., to United States of America, Navy. Rifle recoil simulator. 4,302,190, Cl. 434-18.000.

Shaw, Christopher W. Model steam locomotives. 4,301,617, Cl. 46-257.000.

Shaw, David A.: *See—*
Profeta, Barry P.; and Shaw, David A., 4,302,206, Cl. 23-232.00R.

Shell Oil Company: *See—*
Boyle, George J.; and Coleclough, Norman, 4,301,679, Cl. 73-155.000.
Tieman, Charles H., 4,302,592, Cl. 548-144.000.
Verschuur, Eke, 4,302,211, Cl. 44-24.000.

Shelly, Randolph D. W., to Sperry Corporation. Rectifier-converter power supply with multi-channel flyback inverter. 4,302,803, Cl. 363-20.000.

Shelton, Gerald L.: *See—*
Hierholzer, Frank J., Jr.; Ancona, John A.; and Shelton, Gerald L., 4,302,508, Cl. 428-367.000.

Shenoi, Kishan; Agrawal, Bhagwati P.; and Chu, Larry K. I., to International Telephone and Telegraph Corporation. Decimator apparatus for decreasing the word rate of a digital signal of the type employed in digital telephone systems. 4,302,631, Cl. 179-15.55R.

Shibatani, Kyoichiro: *See—*
Omura, Ikuo; Yamauchi, Junichi; Nagase, Yoshinori; and Shibatani, Kyoichiro, 4,302,381, Cl. 260-42.150.

Shiever, John W.: *See—*
Fleming, James W., Jr.; and Shiever, John W., 4,302,074, Cl. 350-96.340.

Shigehiro, Motoichi, to Bohsei Enterprise, Ltd. Method of producing milo starch. 4,302,475, Cl. 426-53.000.

Shimada, Masayuki, to Tokyo Shibaura Denki Kabushiki Kaisha. Nuclear fuel element. 4,302,295, Cl. 376-430.000.

Shimazaki, Masao: *See—*
Ueda, Hiroshi; Shimazaki, Masao; and Kuwaruru, Yasumitsu, 4,302,379, Cl. 260-38.000.

Shimeki, Yasuharu: *See—*
Mima, Soichiro; Matsushima, Hiroshi; Shimeki, Yasuharu; and Kihara, Nobuyoshi, 4,302,783, Cl. 360-47.000.

Shin-Etsu Chemical Co., Ltd.: *See—*
Arai, Masatoshi; and Futatsumori, Koji, 4,302,571, Cl. 528-32.000.
Imada, Kiyoshi; Ueno, Susumu; and Abe, Tokuji, 4,302,307, Cl. 204-169.000.

Shin-Etsu Polymer Co., Ltd.: *See—*
Sado, Ryoichi; Okamoto, Takekuni; and Matumoto, Shigeru, 4,302,648, Cl. 200-159.00B.

Shirai, Hiroo: *See—*
Kato, Masataka; and Shirai, Hiroo, 4,301,755, Cl. 112-158.00E.

Shirai, Isamu, to Sankyo Electric Company Limited. Electromagnetic clutches. 4,301,906, Cl. 192-84.00C.

Shlykov, Gennady N.: *See—*
Zhestkov, Vitaly I.; Shlykov, Gennady N.; Dyachkov, Vasily M.; Tikhonov, Valentin N.; and Abduganiev, Abdurakhim, 4,301,574, Cl. 19-288.000.

Shobbrook, David E., to General Electric Company Limited, The. Current sources. 4,302,726, Cl. 330-260.000.

Shore, John W.; Eyres, James H.; and Critchley, Kenneth, to Pilkington's Tiles Limited. Manufacture of tiles. 4,301,634, Cl. 52-389.000.

Shore, Sydney. Ribbon cartridge. 4,301,957, Cl. 226-118.000.

Shorma, Edward F.: *See—*
Dimmer, Jerry R.; Ponto, Gene D.; Shorma, Edward F.; Shorma, Richard E.; Shorma, William J.; and Miranowski, Duaine L., 4,302,043, Cl. 296-98.000.

Shorma, Richard E.: *See—*
Dimmer, Jerry R.; Ponto, Gene D.; Shorma, Edward F.; Shorma, Richard E.; Shorma, William J.; and Miranowski, Duaine L., 4,302,043, Cl. 296-98.000.

Shorma, William J.: *See—*
Dimmer, Jerry R.; Ponto, Gene D.; Shorma, Edward F.; Shorma, Richard E.; Shorma, William J.; and Miranowski, Duaine L., 4,302,043, Cl. 296-98.000.

Shroff, Arvind: *See—*
Montgaillard, Jean; and Shroff, Arvind, 4,302,702, Cl. 313-348.000.

Shroff, James R.; and Loev, Bernard, to USV Pharmaceutical Corporation. Antihypertensive amines. 4,302,591, Cl. 546-257.000.

Shull, Michael S. Golf training device. 4,302,014, Cl. 273-183.00B.

Shulman, Lester: *See—*
Revel, Michel; Kimchi, Adi; Shulman, Lester; and Wallach, David, 4,302,533, Cl. 435-4.000.

Shur Medical Corporation: *See—*
Flora, Richard D., 4,302,500, Cl. 428-284.000.

Sick, Erwin, to Erwin Sick GmbH, Optik-Elektronik. Detection apparatus for finding holes in webs. 4,302,105, Cl. 356-237.000.

Sico Incorporated: *See—*
Wilson, Kermit H., 4,301,627, Cl. 52-6.000.

Sieckman, Walter; Pearce, Jai K.; and Schempp, Eberhard G., to Pennsylvania Engineering Corporation. Steel conversion method. 4,302,244, Cl. 75-60.000.

Siegenthaler, Fritz, to Autelca AG. Matrix printer with cutting device. 4,302,119, Cl. 400-621.000.

Siegert, Louis D.: *See—*
Lockwood, Hanford N., Jr.; Siegert, Louis D.; and Brock, Steven B., 4,301,747, Cl. 110-171.000.

Sieghart, Hans D.: *See—*
Czech, Joachim; and Sieghart, Hans D., 4,301,948, Cl. 222-341.000.

Siemens Aktiengesellschaft: *See—*
Ahne, Hellmut; Aulich, Hubert; Weidinger, Friedrich; and Rubner, Roland, 4,302,233, Cl. 501-3.430.
Bauernfeind, Karl; Blaess, Gerhard; and Heindl, Alfred, 4,302,843, Cl. 375-10.000.
Behn, Reinhard; Heywang, Hermann; and Pachonik, Horst, 4,301,765, Cl. 118-718.000.
Beling, Ingo, 4,302,701, Cl. 313-293.000.
Bol, Johannes; Classen, Meinhard; Gunther, Rainer; Hugemann, Bernhard; and Scheiding, Uwe, 4,301,790, Cl. 128-6.000.
Havel, Jiri; Schicketanz, Dieter; and Stut, Hans, 4,302,688, Cl. 307-252.00J.
Hebenstreit, Ernst, 4,302,685, Cl. 307-221.00D.
Kausche, Helmold; and Hebbeker, Heinz, 4,302,737, Cl. 333-172.000.
Mueller, Horst, 4,302,839, Cl. 370-102.000.
Schedele, Helmut, 4,302,742, Cl. 335-202.000.
Schiffner, Gerhard; and Rosenberger, Dieter, 4,302,107, Cl. 356-350.000.
Schneider, Hartmut; and Papp, Alfred, 4,302,232, Cl. 65-3.120.
Winzer, Gerhard, 4,302,071, Cl. 350-96.200.
Zemanek, Josef, 4,302,831, Cl. 375-111.000.

Signorelli, Anthony J.: *See—*
Conner, William C., Jr.; Soled, Stuart L.; Signorelli, Anthony J.; and DeRites, Bruce A., 4,302,610, Cl. 568-475.000.

Sih, John C., to Upjohn Company, The. 13,14-Didehydro-11-deoxy-9-deoxy-9-methylene-19-oxo-PGF_2 compounds. 4,302,596, Cl. 562-503.000.

Silberman, Ira J., to Diversified Products Corporation. Laterally pivoted weight training device. 4,302,005, Cl. 272-94.000.

Silver, Alexander: *See—*
Burgmeier, Lyman R.; McCarty, Frederick B.; and Silver, Alexander, 4,302,693, Cl. 310-156.000.

Silver Seiko, Ltd.: *See—*
Yamaguchi, Yoshimasa; and Iino, Akira, 4,301,839, Cl. 139-29.000.

Sim, Malcolm F.: *See—*
Davies, Roy V.; Fraser, James; Nichol, Kenneth J.; Parkinson, Raymond; Sim, Malcolm F.; and Yates, David B., 4,302,460, Cl. 424-258.000.

Simes Societa Italian Medicinali e Sintetici S.p.A.: *See—*
Casagrande, Cesare; and Ferrari, Giorgio, 4,302,471, Cl. 424-311.000.

Simkins, Roy; and Yardley, James F., to Dunlop Limited. Reinforced tubular articles. 4,302,261, Cl. 156-64.000.

Simko, Aladar O., to Ford Motor Company. Fuel flow control valve assembly. 4,301,825, Cl. 137-111.000.

Simmons, Joseph H.: *See—*
Macedo, Pedro B.; Simmons, Joseph H.; and Murai, Shigeo, 4,302,231, Cl. 65-3.130.

Simon, Joseph A. Process for forming semi-float axle tubes and the like. 4,301,672, Cl. 72-370.000.

Simpson, Elwood J. B. Harness release assembly. 4,302,049, Cl. 297-484.000.

Simpson, Howard D.; Gowdy, Hugh W.; and Light, Steven D., to Union Oil Company of California. Process for producing synthetic fuel gas by reacting liquid hydrocarbons with hydrogen. 4,302,219, Cl. 48-213.000.

Simpson, Jay R.: *See—*
MacChesney, John B.; Simpson, Jay R.; and Walker, Kenneth L., 4,302,230, Cl. 65-3.120.

Sims, Elmer W. Transport truck with multiple access cargo carrying body. 4,302,044, Cl. 296-183.000.

Sims, Roger D.: *See—*
Patil, Babgaunda; Przybylinski, Phillip G.; and Sims, Roger D., 4,301,742, Cl. 105-406.00R.

Singer Company, The: *See—*
Herr, John A.; and Jaffe, Wolfgang, 4,301,978, Cl. 242-150.00R.

Singh, Baldev: *See—*
Collins, Joseph C.; Lesher, George Y.; and Singh, Baldev, 4,302,462, Cl. 424-263.000.

Sipos, Laszlo: *See—*
Golimowski, Jerzy; Sipos, Laszlo; and Valenta, Paul, 4,302,314, Cl. 204-195.00R.

Sirovich, Bruce E.; and Ginsburgh, Irwin, to Standard Oil Company (Indiana). Method of regenerating disproportionated hydrides. 4,302,436, Cl. 423-644.000.

Sit, Hoffman, to McGraw-Edison Company. Pan for ceiling mounted light fixture. 4,302,798, Cl. 362-147.000.

Sjobom, Axel H., to Sunds Defibrator Aktiebolag. Refining apparatus. 4,301,974, Cl. 241-244.000.

Skoog, Malte: *See—*
Kivikas, Toivelemb; Rissler, Kaj; Rynell, Dag; and Skoog, Malte, 4,301,864, Cl. 165-167.000.

Skopek, Thomas R.; Liber, Howard L.; Penman, Bruce W.; Thilly, William G.; and Hoppe, Henry, IV, to Massachusetts Institute of Technology. Assay for mutagenesis in heterozygous diploid human lymphoblasts. 4,302,535, Cl. 435-6.000.

Smale, Charles H., to General Motors Corporation. Ceramic vane drive joint. 4,302,149, Cl. 415-134.000.

Smargiassi, Paul R.: *See—*
Vicenzi, Reno L.; and Smargiassi, Paul R., 4,302,640, Cl. 200-81.00R.

Smart, Charles A.; and Shackleton, Robert A., to Ford Motor Company. Manifolds for internal combustion engines. 4,301,775, Cl. 123-52.00M.

Smit, Hilbrand J.: *See—*
Kemner, Rudolf; Kuilman, Bernardus G. J.; and Smit, Hilbrand J., 4,302,777, Cl. 358-160.000.

Smith, Dale R. Pressure converter valve. 4,301,832, Cl. 137-512.000.

Smith International, Inc.: *See—*
Harrison, Simon J.; and Pividor, Enea R., 4,301,876, Cl. 175-53.000.

Smith, Kendall A.: *See—*
Wake, Robert H.; Gottschalk, Stephen C.; and Smith, Kendall A., 4,302,675, Cl. 250-363.00S.

Smith, Lawrence A., Jr., to Chemical Research & Licensing Co. Process for separating isobutene from C_4 streams. 4,302,356, Cl. 252-426.000.

Smith, Russell M.: *See—*
McSparran, Lloyd W.; Ryan, Paul T.; and Smith, Russell M., 4,301,899, Cl. 191-3.000.
Smith, William C., to Radar Companies, Inc. Disk screen, modular disk assembly and method. 4,301,930, Cl. 209-671.000.
Snamprogetti, S.p.A.: *See—*
Manara, Giovanni; Fattore, Vittorio; and Notari, Bruno, 4,302,597, Cl. 564-127.000.
Snap-on Tools Corporation: *See—*
Grover, Donald D.; and Neumann, Norbert C., 4,302,724, Cl. 324-402.000.
Snavely, John D. Vending apparatus. 4,301,909, Cl. 194-2.000.
Sneer, Meer. Cassette implant. 4,301,814, Cl. 128-769.000.
Snyder, Fred W., Jr.: *See—*
Turbak, Albin F.; El-Kafrawy, Adel; Snyder, Fred W., Jr.; and Auerbach, Andrew B., 4,302,252, Cl. 106-163.00R.
Socci, Robert; Gunderman, Anthony; Fotiu, Eustace; and Kabacoff, Bernard, to USV Pharmaceutical Corporation. Nail enamels. 4,302,442, Cl. 424-61.000.
S.A. Automobiles Citroen: *See—*
Largeteau, Pierre A., 4,301,624, Cl. 51-34.00J.
Societe Anonyme D.B.A.: *See—*
Carre, Jean-Jacques; and Cheron, Jean-Marc, 4,301,653, Cl. 60-535.000.
Societe Automobiles Peugeot: *See—*
Largeteau, Pierre A., 4,301,624, Cl. 51-34.00J.
Societe Europeenne de Propulsion: *See—*
Brunet, Maurice, 4,302,061, Cl. 308-10.000.
Societe Nationale Elf Aquitaine (Production): *See—*
Nobileau, Philippe C.; Dermy, Rene M.; and Fleury, Guy J., 4,302,652, Cl. 219-72.000.
Soe, Masao, to Kubota, Ltd. Computing scale with label issuing scheme. 4,301,878, Cl. 177-5.000.
Sohda, Kathuharu; Sohda, Shojiro; and Sohda, Keiko. Exhaust gas purification apparatus for motor vehicles. 4,301,652, Cl. 60-310.000.
Sohda, Keiko: *See—*
Sohda, Kathuharu; Sohda, Shojiro; and Sohda, Keiko, 4,301,652, Cl. 60-310.000.
Sohda, Shojiro: *See—*
Sohda, Kathuharu; Sohda, Shojiro; and Sohda, Keiko, 4,301,652, Cl. 60-310.000.
Soled, Stuart L.: *See—*
Conner, William C., Jr.; Soled, Stuart L.; Signorelli, Anthony J.; and DeRites, Bruce A., 4,302,610, Cl. 568-475.000.
Solvay and Cie: *See—*
Guillaume, Robert; Pleska, Jean-Pierre; and Indeherbergh, Jean, 4,302,303, Cl. 204-128.000.
Sono-Tek Corporation: *See—*
Berger, Harvey L.; and Brandow, Charles R., 4,301,968, Cl. 239-102.000.
Sony Corporation: *See—*
Ohuchi, Norikazu; Yamoto, Hisayoshi; Hayashi, Hisao; and Matsushita, Takeshi, 4,302,763, Cl. 357-16.000.
Tanaka, Shigeo; and Yamashita, Keitaro, 4,302,837, Cl. 370-69.000.
Yamamoto, Yoshinori, 4,302,788, Cl. 360-96.600.
Southwire Company: *See—*
Berry, Milton E.; and Pariani, Ronald L., 4,301,997, Cl. 266-236.000.
Sowa, Armin: *See—*
Munding, German; Hopmann, Helmut; Sowa, Armin; Beckervordersandforth, Christian; and Terschuren, Walter, 4,301,875, Cl. 175-12.000.
Spanswick, James, to Standard Oil Company (Indiana). Color stable aromatic polyesters. 4,302,382, Cl. 260-45.80A.
Spaude, Alfons: *See—*
Engel, Georg; and Spaude, Alfons, 4,301,670, Cl. 72-226.000.
Spence, James R., to Standard Oil Company (Indiana). Anti-static additives. 4,302,216, Cl. 44-71.000.
Spencer Wright Industries, Inc.: *See—*
Ingram, Gary L.; and Jolley, Paul E., 4,301,752, Cl. 112-79.00R.
Sperry Corporation: *See—*
Kent, William H.; and Mitchell, Peter G., 4,302,826, Cl. 367-82.000.
McMahon, Donald H., 4,302,835, Cl. 370-4.000.
Moulton, Robert K.; and Thompson, John W., 4,302,732, Cl. 331-176.000.
Schonfeld, Arnold; and Curley, Joseph M., 4,302,096, Cl. 355-43.000.
Shelly, Randolph D. W., 4,302,803, Cl. 363-20.000.
Spilsbury, Thomas W., 4,302,708, Cl. 315-389.000.
Spilsbury, Thomas W., to Sperry Corporation. Deflection amplifier system for raster scanned cathode ray tube displays. 4,302,708, Cl. 315-389.000.
Spinner, Georg. Detachable coupling for pressure-medium-filled HF lines. 4,302,064, Cl. 339-16.00C.
Spitler, Keith G.: *See—*
Phillips, Barry A.; Spitler, Keith G.; and Keegan, Richard E., 4,302,272, Cl. 156-309.900.
Sprague Electric Company: *See—*
Kelley, Mark E., 4,302,691, Cl. 307-592.000.
Tierman, Melvin, 4,302,301, Cl. 204-38.00A.
Spratt, Donald E.; and Spratt, Franklin D., to Spratt, Donald E. Tobacco harvesting method and apparatus. 4,301,645, Cl. 56-27.500.
Spratt, Franklin D.: *See—*
Spratt, Donald E.; and Spratt, Franklin D., 4,301,645, Cl. 56-27.500.
Sprecher & Schuh AG: *See—*
Thaler, Richard, 4,302,645, Cl. 200-148.00A.
Springston, Jefferson J., to Lipman Electric Company, Inc. Water pumping device. 4,302,162, Cl. 417-424.000.
Spykerman, Jon J.: *See—*
Marez, Alejandro; and Spykerman, Jon J., 4,302,805, Cl. 363-91.000.
Square D Company: *See—*
Cox, Russell; Drilling, Joseph C.; and Reed, Ronald H., 4,302,643, Cl. 200-144.00R.
Squire, Edward N., to Du Pont de Nemours, E. I., and Company. Process for the isomerization of hexafluoropropylene oxide to hexafluoroacetone. 4,302,608, Cl. 568-384.000.
Staat der Nederlanden (Staatsbedrijf der Posterijen, Telegrafie en Telefonie): *See—*
Dukel, Cornelis; Hongerheide, Pieter; and Niehaus, Jan G. C., 4,302,039, Cl. 292-341.160.
Stach, Heinrich: *See—*
Elter, Claus; Stracke, Wilfried; Stach, Heinrich; Schoening, Josef; and Schwiers, Hans G., 4,302,293, Cl. 376-381.000.
Staehler, Fritz: *See—*
Gundermann, Karl-Dietrich; Wulff, Karl; Staehler, Fritz; and Linke, Hans-Ralf, 4,302,537, Cl. 435-7.000.
Stamicarbon, B.V.: *See—*
Barends, Willem J.; and van Mulken, Alexis J. W., 4,301,943, Cl. 222-1.000.
Standard Oil Company: *See—*
Paspek, Stephen C., 4,302,207, Cl. 44-1.00R.
Standard Oil Company (Indiana): *See—*
Pellet, Regis J.; and Bertolacini, Ralph J., 4,302,358, Cl. 252-441.000.
Sirovich, Bruce E.; and Ginsburgh, Irwin, 4,302,436, Cl. 423-644.000.
Spanswick, James, 4,302,382, Cl. 260-45.80A.
Spence, James R., 4,302,216, Cl. 44-71.000.
Stanley, Richard B. Hand brake for railroad cars. 4,301,693, Cl. 74-505.000.
Stapley, Edward O.; and Mata, Justo M., to Merck & Co., Inc. Cephalosporin antibiotics. 4,302,578, Cl. 542-427.000.
Stark, Gary M.; and Wagner, Alan D. Apparatus and method for using rolls of light sensitive paper in a reproduction machine. 4,302,102, Cl. 355-72.000.
Stark, George R.: *See—*
Wahl, Geoffrey M.; and Stark, George R., 4,302,204, Cl. 23-230.300.
Stauffer, Adolf: *See—*
Hellmer, Lars; Keunecke, Gerhard; Lell, Rainer; Al-Muddarris, Ghazi R.; Pachaly, Reinhard; Stauffer, Adolf; and Vangala, V. Rao, 4,302,434, Cl. 423-573.00G.
Steck, Edgar A.; and Alving, Carl R., to United States of America, Army. Liposome carriers in leishmaniasis chemotherapy with 8-aminoquinoline derivatives. 4,302,459, Cl. 424-258.000.
Steenstrup, Per R., to Reson System ApS. Process for continuous homogenization or emulsification of liquid and an ultrasonic apparatus for carrying out the process. 4,302,112, Cl. 366-114.000.
Steigerwald, Carl J.: *See—*
Layton, Terry N.; and Steigerwald, Carl J., 4,301,812, Cl. 128-761.000.
Steigler, Karl Heinz: *See—*
Schulze, Ehrhart, 4,302,276, Cl. 156-553.000.
Stein, Richard B., to Anic S.p.A. Process for producing anhydrous magnesium chloride and suitable apparatus. 4,302,433, Cl. 423-498.000.
Stein, Werner: *See—*
Giede, Wolfgang; Koch, Karlheinz; Kolaczinski, Gerhard; Rupilius, Wolfgang; and Stein, Werner, 4,302,354, Cl. 252-392.000.
Steinberg, Albert H.; and Ward, Lowell G., to Allied Corporation. Process of forming a fiber reinforced, stampable thermoplastic laminate. 4,302,269, Cl. 156-243.000.
Steinmetz, William H., to Du Pont de Nemours, E. I., and Company. Water-borne coating composition made from modified epoxy resin, polymeric acid and tertiary amine. 4,302,373, Cl. 260-29.300.
Stenlund, Stig; and Nordgren, Lars, to AB Mecman. Damping device in pressurized fluid cylinders. 4,301,714, Cl. 91-394.000.
Stephen, James H.; and McCann, John D. Marker tag for a detection system. 4,302,846, Cl. 455-19.000.
Sterling Drug Inc.: *See—*
Collins, Joseph C.; Lesher, George Y.; and Singh, Baldev, 4,302,462, Cl. 424-263.000.
John, Phillip M.; Belanger, Raymond J.; and Paikoff, Myron, 4,302,440, Cl. 424-35.000.
Stetter, Joseph R.; and Cromer, Raymond B., to Becton, Dickinson and Company. Gas sensing unit. 4,302,315, Cl. 204-195.00R.
Stettler, Richard J., to General Motors Corporation. Lean prechamber outflow combustor with continuous pilot flow. 4,301,656, Cl. 60-737.000.
Stevens, Vernon C., to Ohio State University, The. Antigenic modification of polypeptides. 4,302,386, Cl. 260-112.50R.
Stichting Bouwcentrum: *See—*
van Heel, Joannes M., 4,302,406, Cl. 261-124.000.
Stickler, Arthur C. Attachment for conical woodsplitter. 4,301,847, Cl. 144-194.000.
Still, William L., to Aerospace Industrial Associates, Inc. Bore telemetry channel of increased capacity. 4,302,757, Cl. 340-854.000.
Stockinger, Friedrich; Eldin, Sameer H.; and Lohse, Friedrich, to Ciba-Geigy Corporation. Metal salt/amine complexes as epoxy resin catalytic curing agents. 4,302,573, Cl. 528-89.000.

Stockton, Ronald J.: *See—*
United States of America, National Aeronautics and Space Administration; Stockton, Ronald J.; and Johnson, Russell W., 4,302,734, Cl. 333-104.000.
Stohlquist, Roger H., to Anderson Bros. Mfg. Co. Packaging apparatus. 4,301,843, Cl. 141-172.000.
Stone, Hilton F., Jr.: *See—*
Dillner, James R.; and Stone, Hilton F., Jr., 4,301,584, Cl. 29-156.80B.
Stone, Philip A.: *See—*
Carpenter, Ronald D.; and Stone, Philip A., 4,301,907, Cl. 192-106.200.
Stonecipher, Sharon A.: *See—*
Sydansk, Robert D.; Gucwa, Paul R.; and Stonecipher, Sharon A., 4,301,867, Cl. 166-292.000.
Stork Kwant B.V.: *See—*
de Vries, Dirk, 4,301,759, Cl. 114-144.00E.
Stracke, Wilfried: *See—*
Elter, Claus; Stracke, Wilfried; Stach, Heinrich; Schoening, Josef; and Schwiers, Hans G., 4,302,293, Cl. 376-381.000.
Straehle, Wolfgang: *See—*
Horn, Peter; Hesse, Anton; Weyland, Peter; Straehle, Wolfgang; and Marx, Matthias, 4,302,551, Cl. 521-163.000.
Stravitz, David M., to Ambico Inc. Photographic filter holder with threaded adapter. 4,302,078, Cl. 350-318.000.
Straw, Alan; Cropper, Edwin; and Dillarstone, Alan, to Colgate-Palmolive Company. All-purpose liquid abrasive cleaner. 4,302,347, Cl. 252-116.000.
Streeter, Robert D., to Magnavox Consumer Electronics Company. Low frequency AM stereophonic broadcast and receiving apparatus. 4,302,626, Cl. 179-1.5GS.
Streifer, William: *See—*
Burnham, Robert D.; Scifres, Donald R.; and Streifer, William, 4,302,729, Cl. 331-94.50H.
Streubel, Wolfgang: *See—*
Benteler, Hubertus; Streubel, Wolfgang; and Olszewski, Egon, 4,301,959, Cl. 228-102.000.
Strohlein, Adolph J., Jr.: *See—*
Davis, Donald L.; and Strohlein, Adolph J., Jr., 4,301,626, Cl. 52-2.000.
Strosberg, Arthur M.: *See—*
Kluge, Arthur F.; Strosberg, Arthur M.; Whiting, Roger; and Christie, George, 4,302,469, Cl. 424-273.00R.
Strostlik, Peter: *See—*
Ahner, Stefan; Knackstedt, Hans-Gunther; and Strostlik, Peter, 4,302,680, Cl. 250-506.000.
Struger, Odo J.; Schultz, Ronald E.; and Sammons, Barry E., to Allen-Bradley Company. Dual language programmable controller. 4,302,820, Cl. 364-900.000.
Stuckert, Paul E.: *See—*
Bouricius, Willard O.; and Stuckert, Paul E., 4,302,810, Cl. 364-200.000.
Stull, Bertram O.: *See—*
Wood, Stanley E.; and Stull, Bertram O., 4,302,208, Cl. 44-7.00D.
Stut, Hans: *See—*
Havel, Jiri; Schicketanz, Dieter; and Stut, Hans, 4,302,688, Cl. 307-252.00J.
Styles, Virgil L.: *See—*
Morrison, Robert W., Jr.; Mallory, William R.; and Styles, Virgil L., 4,302,587, Cl. 544-320.000.
Submergible Oil Systems, Inc.: *See—*
Rohner, Thomas G., 4,302,793, Cl. 361-385.000.
Sugano, Kazuhiko: *See—*
Iwanaga, Kazuyoshi; Sugano, Kazuhiko; and Ohtsuka, Kunio, 4,301,697, Cl. 74-869.000.
Suling, Carlhans: *See—*
Walkowiak, Michael; Podszun, Wolfgang; Leusner, Bernhard; Suling, Carlhans; and Schulz, Hans H., 4,302,376, Cl. 260-29.7UA.
Sullivan, Ann: *See—*
Comai, Karen; Sullivan, Ann; and Westley, John, 4,302,450, Cl. 424-181.000.
Sullivan, Robert S.: *See—*
Deem, William C.; Esposito, Robert; Littler, Laurence L.; and Sullivan, Robert S., 4,302,004, Cl. 272-29.000.
Sullivan, Thomas E.: *See—*
Brindisi, Frank A., Jr.; Bleeks, Thomas W.; and Sullivan, Thomas E., 4,302,246, Cl. 75-101.00R.
Sumitomo Chemical Company, Limited: *See—*
Sano, Takezo; Inoue, Haruo; and Furuta, Akihiro, 4,302,528, Cl. 430-273.000.
Yamada, Hirotada; Nakagome, Takenari; and Komatsu, Toshiaki, 4,302,454, Cl. 424-246.000.
Sumitomo Heavy Industries, Ltd.: *See—*
Tanaka, Hiromi, 4,302,221, Cl. 55-60.000.
Sumner, Jeffery L.; and Tinsley, Arthur L., to Northwestern Laboratories, Inc. Textile treating composition and method of use thereof. 4,302,202, Cl. 8-455.000.
Sunbeam Corporation: *See—*
Swanson, Charles E.; and Hector, Roy W., 4,302,660, Cl. 219-391.000.
Sunds Defibrator Aktiebolag: *See—*
Sjobom, Axel H., 4,301,974, Cl. 241-244.000.
Sunohara, Yoshio; and Ohtsuka, Kunio, to Nissan Motor Company, Limited. Lock-up torque converter with clutch piston engageable with converter cover. 4,301,900, Cl. 192-3.300.
Surkamp, Paul: *See—*
Brock, Josef; and Surkamp, Paul, 4,301,905, Cl. 192-71.000.
Suzaki, Kazuo; Koda, Hirokazu; Nakamura, Kenichi; Yoshikawa, Syuich; and Ohara, Neoki, to Sharp Kabushiki Kaisha; and Aishin Seiki Kabushiki Kaisha. Electric sewing machine. 4,301,754, Cl. 112-158.00E.
Suzi Light Corporation: *See—*
Warren, Jack L., 4,302,741, Cl. 335-131.000.
Suzuki, Hideo; Ikuta, Isao; Tomita, Sadami; and Ishihara, Joo, to Hitachi, Ltd., Research Development Corporation of Japan; and Hitachi Metals, Ltd. Apparatus for producing metal ribbon. 4,301,855, Cl. 164-254.000.
Suzuki, Ryoichi; Uchiyama, Takashi; Murakami, Hiroyasu; Kawamura, Masaharu; Sakai, Shinji; and Momiyama, Kikuo, to Canon Kabushiki Kaisha. Liquid crystal indicator in camera finder. 4,302,086, Cl. 354-53.000.
Suzuki, Toshio: *See—*
Hongu, Tatsuya; Suzuki, Toshio; and Ogawa, Yoshihiko, 4,302,552, Cl. 521-176.000.
Svenska Rotor Maskiner AB: *See—*
Mock, Karl H., 4,301,858, Cl. 165-9.000.
Svoboda, Josef, to TMC Corporation. Safety ski binding. 4,302,028, Cl. 280-631.000.
Swanson, Charles E.; and Hector, Roy W., to Sunbeam Corporation. Door opening mechanism for partially opening a toaster oven door. 4,302,660, Cl. 219-391.000.
Swartz, David L.: *See—*
El Khadem, Hassan S.; and Swartz, David L., 4,302,449, Cl. 424-180.000.
Swartzendruber, David L.: *See—*
Plough, Stephan E.; and Swartzendruber, David L., 4,301,898, Cl. 190-52.000.
Sweeney, W. Alan, to Chevron Research Company. Motor fuel composition. 4,302,214, Cl. 44-56.000.
Swint, Ronnie K.: *See—*
Waddell, Gerald E.; Windler, Clayton W.; and Swint, Ronnie K., 4,302,025, Cl. 280-79.10A.
Sydansk, Robert D.; Gucwa, Paul R.; and Stonecipher, Sharon A., to Marathon Oil Company. Process for selectively reducing the permeability of a subterranean sandstone formation. 4,301,867, Cl. 166-292.000.
Syeles, Albert M.: *See—*
Scarzello, John F.; Lenko, Daniel S.; Krall, Albert D.; Grine, Wayne R.; Brown, Robert E.; Usher, George W.; Mills, Milton K.; and Syeles, Albert M., 4,302,746, Cl. 340-38.00L.
Syntex (U.S.A.) Inc.: *See—*
Kluge, Arthur F.; Strosberg, Arthur M.; Whiting, Roger; and Christie, George, 4,302,469, Cl. 424-273.00R.
Szekely, Paul: *See—*
Morser, Alfred H.; and Szekely, Paul, 4,302,711, Cl. 318-327.000.
Tachiki, Shigeo; Ishimaru, Toshiaki; and Hayashi, Nobuyuki, to Hitachi Chemical Company, Ltd. Process for preparing flexible printed-circuit board. 4,302,268, Cl. 156-238.000.
Tadiran Israel Electronics Industries Ltd.: *See—*
Laufer, Shlomo, 4,302,760, Cl. 343-715.000.
Taiho Kogyo Co., Ltd.: *See—*
Ueda, Hiroshi; Shimazaki, Masao; and Kuwazuru, Yasumitsu, 4,302,379, Cl. 260-38.000.
Taiyo Musen Co. Ltd.: *See—*
Mori, Kenzo; and Yasuda, Hyo, 4,302,759, Cl. 343-121.000.
Takahashi, Yoshihiro, to Envirotech Corporation. System and process for total gaseous nonmethane organic analysis. 4,302,422, Cl. 422-88.000.
Takao, Hiroshi: *See—*
Ishitani, Shigeo; Kimura, Shinji; Takao, Hiroshi; and Uchida, Masaaki, 4,302,312, Cl. 204-195.00S.
Takasawa, Seigo: *See—*
Hirata, Tadashi; Hashimoto, Yukio; Ogasa, Takehiro; Kobayashi, Shigeru; Sato, Akira; Sato, Kiyoshi; and Takasawa, Seigo, 4,302,540, Cl. 435-119.000.
Hirata, Tadashi; Hashimoto, Yukio; Matsukuma, Ikuo; Yoshiie, Shigeo; and Takasawa, Seigo, 4,302,541, Cl. 435-119.000.
Takashima, Kunihide: *See—*
Matsumoto, Fumio; Harase, Jirou; Takashima, Kunihide; and Nakayama, Hisanobu, 4,302,257, Cl. 148-111.000.
Takayama, Shuichi: *See—*
Yamazaki, Masafumi; Takayama, Shuichi; Tsuboshima, Kosaku; Nakajima, Yoshio; and Iwasawa, Teruo, 4,302,780, Cl. 358-228.000.
Takeda Chemical Industries, Ltd.: *See—*
Ishiguro, Toshihiro; Ukawa, Kiyoshi; and Nohara, Akira, 4,302,463, Cl. 424-263.000.
Takeda, Kunihiko: *See—*
Miyake, Tetsuya; Ogawa, Norito; Inada, Kohji; and Takeda, Kunihiko, 4,302,424, Cl. 422-159.000.
Takei, Yoshiaki; Kimura, Yoneko; and Nomori, Hiroyuki, to Konishiroku Photo Industry Co., Ltd. Photosensitive element for electrophotography. 4,302,521, Cl. 430-59.000.
Takekoshi, Tohru, to General Electric Company. Heat curable polyimides. 4,302,575, Cl. 528-185.000.
Takemura, Shinichiro: *See—*
Muraki, Ryoji; Takemura, Shinichiro; Ai, Tetsuo; and Kawasaki, Takaaki, 4,302,205, Cl. 23-232.00R.

Taketani, Yutaka: *See—*
Kawaguchi, Takeyuki; Taketani, Yutaka; Sasaki, Noriaki; Minematsu, Hiroyoshi; Hayashi, Yuzuru; and Hara, Shigeyoshi, 4,302,336, Cl. 210-654.000.
Takeuchi, Eiichi, to Casio Computer Co., Ltd.; and Olympus Optical Co., Ltd. Apparatus for detecting the stop of a magnetic tape traveling in a magnetic recording and reproducing device. 4,302,786, Cl. 360-74.200.
Takeuchi, Hitoshi: *See—*
Kato, Masaru; Takeuchi, Hitoshi; and Horiuchi, Toshiaki, 4,302,514, Cl. 428-569.000.
Takeuchi, Tokuo: *See—*
Yoshino, Tetsuo; Sawano, Tsuyotake; and Takeuchi, Tokuo, 4,302,687, Cl. 307-252.00G.
Taki, Waro: *See—*
Handa, Hajime; Yonekawa, Yasuhiro; Yamagata, Sen; Taki, Waro; Ikada, Yoshito; and Iwata, Hiroo, 4,301,803, Cl. 128-349.00B.
Tamaki, Kiyouhei: *See—*
Hatakenaka, Tatsuo; Tamaki, Kiyouhei; and Nanbu, Tetsuo, 4,301,958, Cl. 228-4.500.
Tamamura, Junichi; Murakami, Yoshiyuki; and Terada, Akira, to Hosiden Electronics Co., Ltd. Electrode plate electret of electro-acoustic transducer and its manufacturing method. 4,302,633, Cl. 179-111.00E.
Tamaru, Akio; and Kitsunai, Minoru, to Mitsubishi Chemical Industries, Ltd. Process for producing tantalum concentrates. 4,302,243, Cl. 75-1.00T.
Tanaka, Akio, to Zenith Radio Corporation. AFT-wide automatic frequency control system and method. 4,302,778, Cl. 358-195.100.
Tanaka, Hiromi, to Sumitomo Heavy Industries, Ltd. Process for regeneration of carbonaceous adsorbent for use in desulfurization of exhaust gas. 4,302,221, Cl. 55-60.000.
Tanaka, Hiromichi; Imamura, Osamu; and Asada, Akihiro, to Hitachi, Ltd. Automatic record size detector. 4,302,833, Cl. 369-217.000.
Tanaka, Minoru; and Yagi, Kenkichi, to Toray Industries, Incorporated. Dense, elegant and pliable sheet material comprising fibrous base impregnated with a diol-hindered amine polyurethane system. 4,302,493, Cl. 428-91.000.
Tanaka, Shigeo; and Yamashita, Keitaro, to Sony Corporation. FM Multiplex system for selectively delaying one of two audio signals. 4,302,837, Cl. 370-69.000.
Tanaka, Shunpei: *See—*
Hamaoka, Takashi; Tanaka, Shunpei; Musha, Toru; and Oinoue, Kenichi, 4,302,830, Cl. 369-45.000.
Taniguchi, Hiroshi: *See—*
Kamura, Takashi; and Taniguchi, Hiroshi, 4,302,768, Cl. 358-36.000.
Tannerstal, Harding, to AB A. K. Eriksson. Method and chip-manufacturing edging-mill for edging board. 4,301,844, Cl. 144-3.00R.
Tapper, Robert. Method for iontophoretic treatment. 4,301,794, Cl. 128-207.210.
Tarjan, Peter P.: *See—*
Peers-Trevarton, Charles A.; Tarjan, Peter P.; Vadas, Stephen F.; and Dorman, Frederick S., 4,301,805, Cl. 128-419.00P.
Tauber, Thomas E.: *See—*
Magee, James H.; and Tauber, Thomas E., 4,302,754, Cl. 340-631.000.
Taus, Herbert G. Pulse rate monitor. 4,301,808, Cl. 128-687.000.
Taylor, Glenn N., to Kendall Company, The. Ballnon testing device. 4,302,106, Cl. 356-240.000.
Taylor, Herbert N., Jr. Photographic instruction card holder. 4,301,608, Cl. 40-16.400.
Taylor, Jerry L. Track suspension and drive for snowmobile. 4,301,884, Cl. 180-190.000.
Taylor, Richard J.; and Bennett, Phillip P., to Micro Consultants Limited. Digital still picture storage system with size change facility. 4,302,776, Cl. 358-160.000.
Taylor, Thomas J., to Western Electric Company, Incorporated. Flat cable assembly and methods of terminating and connectorizing the cable of same. 4,302,065, Cl. 339-17.00F.
Tazaki, Michiji. Water cooling jacket for protection from fire. 4,301,631, Cl. 52-168.000.
TDK Electronics Co., Ltd.: *See—*
Umeki, Shinji; Onuki, Kazuaki; and Maruta, Fumio, 4,302,510, Cl. 428-403.000.
Tebbens, Klaas: *See—*
Gurak, Nur; and Tebbens, Klaas, 4,302,377, Cl. 260-29.7PT.
Technical Development Co.: *See—*
Magee, James H.; and Tauber, Thomas E., 4,302,754, Cl. 340-631.000.
Technicare Corporation: *See—*
Wake, Robert H.; Gottschalk, Stepben C.; and Smith, Kendall A., 4,302,675, Cl. 250-363.00S.
Tedeschi, Rinaldo R.; and Full, Gary G., to United Technologies Corporation. Snap acceleration test for an internal combustion engine. 4,302,815, Cl. 364-551.000.
Tedeschi, Rinaldo R.: *See—*
Full, Gary G.; and Tedeschi, Rinaldo R., 4,301,678, Cl. 73-116.000.
Full, Gary G.; and Tedeschi, Rinaldo R., 4,302,814, Cl. 364-551.000.
Teetz, Wolfgang; and Desprez, Alfred, to Maschinenfabrik Carl Zangs Aktiengesellschaft. Device for the interruption of the embroidery needle movement on embroidery- or sewing machines. 4,301,756, Cl. 112-221.000.
Teijin Limited: *See—*
Kawaguchi, Takeyuki; Taketani, Yutaka; Sasaki, Noriaki; Minematsu, Hiroyoshi; Hayashi, Yuzuru; and Hara, Shigeyoshi, 4,302,336, Cl. 210-654.000.
Teitel, Robert J. Hydrogen supply system. 4,302,217, Cl. 48-180.00C.
Tekma Kinomat S.p.A: *See—*
Camardella, Giuseppe, 4,301,975, Cl. 242-25.00R.
Tektronix, Inc.: *See—*
Cabot, Richard C.; and Hofer, Bruce E., 4,302,738, Cl. 333-174.000.
Telectronics Pty. Limited: *See—*
Doring, Carl, 4,301,815, Cl. 128-785.000.
Teledyne Industries, Inc.: *See—*
Cammack, Michael A.; and Elkins, Christopher W., 4,302,186, Cl. 433-80.000.
Hufton, Arthur G., 4,301,779, Cl. 123-478.000.
Telefonaktiebolaget L M Ericsson: *See—*
Vucins, Viesturs J., 4,302,072, Cl. 350-96.210.
Teltone Corporation: *See—*
Foulkes, John D.; Worthington, David K.; and Trombly, John E., 4,302,629, Cl. 179-2.0DP.
Tencor Instruments: *See—*
Urbanek, Karel; Kren, George J.; and Wheeler, William R., 4,302,721, Cl. 324-226.000.
Terada, Akira: *See—*
Tamamura, Junichi; Murakami, Yoshiyuki; and Terada, Akira, 4,302,633, Cl. 179-111.00E.
Teramachi, Hiroshi. Linear guide slide bearing unit. 4,302,059, Cl. 308-6.00C.
Terauchi, Kiyoshi: *See—*
Saegusa, Nobuaki; and Terauchi, Kiyoshi, 4,301,716, Cl. 92-71.000.
Terry Corporation: *See—*
deNavarre, Maison G.; and Meadows, Timothy, 4,302,443, Cl. 424-68.000.
Terschuren, Walter: *See—*
Munding, German; Hopmann, Helmut; Sowa, Armin; Beckervordersandforth, Christian; and Terschuren, Walter, 4,301,875, Cl. 175-12.000.
Tescher, Andrew G.: *See—*
Widergren, Robert D.; Chen, Wen-Hsiung; Fralick, Stanley C.; and Tescher, Andrew G., 4,302,775, Cl. 358-136.000.
Tetra Pak International AB: *See—*
Andersson, Par M., 4,301,696, Cl. 74-821.000.
Carlsson, Lars C.; and Selberg, Johan H. H., 4,301,927, Cl. 206-622.000.
Pupp, Herwig, 4,301,939, Cl. 220-267.000.
Texaco Canada Inc.: *See—*
Bialek, Rene F., 4,302,326, Cl. 208-188.000.
Texas Instruments Incorporated: *See—*
Bruni, Frank J., 4,302,280, Cl. 156-617.0SP.
Guterman, Daniel C.; and Chiu, Te-Long, 4,302,766, Cl. 357-41.000.
Niemann, George W., 4,302,818, Cl. 364-736.000.
Texas Refinery Corporation: *See—*
Buse, Mark W., 4,302,370, Cl. 260-28.5AS.
Texasgulf Inc.: *See—*
Altorfer, Kenneth J.; and Marantz, Daniel R., 4,302,483, Cl. 427-37.000.
Textile Research Institute: *See—*
Miller, Bernard; Friedman, Henry L.; and Meiser, Charles H., Jr., 4,302,222, Cl. 55-67.000.
Th. Goldschmidt AG: *See—*
Weitemeyer, Christian; Kropac, Vaclav; and Priesch, Manfred, 4,302,512, Cl. 428-447.000.
Thaler, Richard, to Sprecher & Schuh AG. Gas-blast switch. 4,302,645, Cl. 200-148.00A.
Thatcher, Gary G. Asphalt sealing machine. 4,302,128, Cl. 404-111.000.
Theurer, Josef, to Franz Plasser Bahnbaumaschinen-Industriegesellschaft m.b.H. Apparatus for the replacement of rails of a track. 4,301,738, Cl. 104-2.000.
Thiel, Peter L.: *See—*
Michalik, Anthony J.; Thiel, Peter L.; Elson, Ronald D.; and Palmer, James A., 4,301,915, Cl. 198-851.000.
Thilly, William G.: *See—*
Skopek, Thomas R.; Liber, Howard L.; Penman, Bruce W.; Thilly, William G.; and Hoppe, Henry, IV, 4,302,535, Cl. 435-6.000.
Thomas, David H., to International Harvester Company. Door check and holding device for a motor vehicle. 4,301,570, Cl. 16-85.000.
Thomas, Gareth J.: *See—*
Hassall, Cedric H.; Broadhurst, Michael J.; and Thomas, Gareth J., 4,302,398, Cl. 260-365.000.
Thomas, Luther B. Combination internal combustion and steam engine. 4,301,655, Cl. 60-712.000.
Thomas, Michael D.: *See—*
Ryder, Francis E.; and Thomas, Michael D., 4,302,664, Cl. 219-504.000.
Thompson, Danny R.: *See—*
Daly, Robert C.; Thompson, Danny R.; and Farid, Samir Y., 4,302,527, Cl. 430-270.000.
Thompson, David F.: *See—*
Grimes, Richard V.; Harlamert, W. Benjamin; and Thompson, David F., 4,302,155, Cl. 416-144.000.
Thompson, David L.; Duggan, Stephen R.; and Roline, Glenn M., to Medtronic, Inc. Pacemaker with Hall effect externally controlled switch. 4,301,804, Cl. 128-419.0PG.
Thompson, Harris S. Sigh producing mechanism for positive pressure respirator. 4,301,793, Cl. 128-204.210.

Thompson, John W.: *See—*
Moulton, Robert K.; and Thompson, John W., 4,302,732, Cl. 331-176.000.
Thompson, Robert B.; Vasile, Carmine F.; and Houston, Roger B., to Rockwell International Corporation. Ultrasonic non-destructive evaluation technique for structures of complex geometry. 4,301,684, Cl. 73-602.000.
Thomsen, James P.: *See—*
Jacobsen, Wayoo A.; and Thomsen, James P., 4,302,635, Cl. 179-156.00R.
Thomson-CSF: *See—*
Benoit, Michel; and Gerlach, Pierre, 4,302,705, Cl. 315-39.000.
Hartemann, Pierre; and Castera, Jean-Paul, 4,301,683, Cl. 73-517.00R.
Huriau, Alain, 4,302,842, Cl. 375-3.000.
Montgaillard, Jean; and Shroff, Arvind, 4,302,702, Cl. 313-348.000.
Thorne, Michael A.: *See—*
Scherubel, Gary A.; and Thorne, Michael A., 4,301,868, Cl. 166-308.000.
Thurber, Stephen H. Safety rotor for mower. 4,301,642, Cl. 56-12.700.
Tichtinsky, Jean-Claude, to Office National d'Etudes et de Recherche Aerospatiales. Vibrating device with motionless frame. 4,302,709, Cl. 318-116.000.
Tieman, Charles H., to Shell Oil Company. Pesticidal 3-(2,3-dihydrobenzofuran-7-yl)-5-methoxy-1,3,4-oxadiazol-2(3H)-one. 4,302,592, Cl. 548-144.000.
Tiemann, James P. Aircraft blade clamp. 4,301,982, Cl. 244-17.110.
Tierman, Melvin, to Sprague Electric Company. Solid electrolyte deposition on anodized pellets. 4,302,301, Cl. 204-38.00A.
Tikhonov, Valentin N.: *See—*
Zhestkov, Vitaly I.; Shlykov, Gennady N.; Dyachkov, Vasily M.; Tikhonov, Valentin N.; and Abduganiev, Abdurakhim, 4,301,574, Cl. 19-288.000.
Timofeev, Valery A.: *See—*
Lunev, Evgeny I.; Leonov, Alexandr P.; Kosyreva, Nina P.; Kosyrev, Felix K.; Timofeev, Valery A.; Pekh, Anatoly K.; Kononykhin, Alexei S.; and Artamonov, Alexei V., 4,301,680, Cl. 73-190.0EW.
Timson, William J., to Polaroid Corporation. Detection of subsurface defects by reflection interference. 4,302,108, Cl. 356-359.000.
Tinsley, Arthur L.: *See—*
Sumner, Jeffery L.; and Tinsley, Arthur L., 4,302,202, Cl. 8-455.000.
TMC Corporation: *See—*
Himmetsberger, Alois; and Wittmann, Heinz, 4,302,027, Cl. 280-618.000.
Svoboda, Josef, 4,302,028, Cl. 280-631.000.
Tohyama, Yoshikuni: *See—*
Kan, Yasuhito; Kimura, Yoshimasa; Ishida, Masato; Miyamoto, Koichi; and Tohyama, Yoshikuni, 4,302,098, Cl. 355-55.000.
Tokyo Shibaura Denki Kabushiki Kaisha: *See—*
Shimada, Masayuki, 4,302,295, Cl. 376-450.000.
Tokyo Shibaura Electric Co., Ltd.: *See—*
Muraki, Ryoji; Takemura, Shinichiro; Ai, Tetsuo; and Kawasaki, Takaaki, 4,302,205, Cl. 23-232.00R.
Toll, Harry V.: *See—*
Severs, Stephen B.; and Toll, Harry V., 4,302,291, Cl. 376-293.000.
Tolsa, S. A.: *See—*
Alvarez Berenguer, Antonio; Sanchez Montero, Fernando R.; and Aragon Martinez, Juan J., 4,302,594, Cl. 556-425.000.
Tomasi, Jean-Pierre, to U.S. Philips Corporation. Radar system for determining range and speed of an object. 4,302,758, Cl. 343-9.00R.
Tomikawa, Takeshi: *See—*
Hattori, Kenro; Ogawa, Takeshi; Ochiai, Minoru; Tomikawa, Takeshi; and Ikeda, Takeji, 4,302,489, Cl. 427-244.000.
Tominaga, Michiaki; Tone, Hitoshi; and Nakagawa, Kazuyuki, to Otsuka Pharmaceutical Co., Ltd. Carbostyril compounds. 4,302,588, Cl. 546-158.000.
Tomita, Osamu, to Fujitsu Limited. High speed variable intensity printing system. 4,302,117, Cl. 400-166.000.
Tomita, Sadami: *See—*
Suzuki, Hideo; Ikuta, Isao; Tomita, Sadami; and Ishihara, Joo, 4,301,855, Cl. 164-254.000.
Tomoda, Toshimasa: *See—*
Wakayama, Naoaki; Tomoda, Toshimasa; and Fukakusa, Shinji, 4,302,696, Cl. 313-93.000.
Tomy Kogyo Co., Inc.: *See—*
Ikeda, Masaki, 4,301,615, Cl. 46-105.000.
Tone, Hitoshi: *See—*
Tominaga, Michiaki; Tone, Hitoshi; and Nakagawa, Kazuyuki, 4,302,588, Cl. 546-158.000.
Tonomura, Yoshiaki, to Janome Sewing Machine Co. Ltd. Automatic thread tension control device of sewing machine. 4,301,757, Cl. 112-254.000.
Tonsfeldt, Wayne S.: *See—*
Gates, Donald C.; and Tonsfeldt, Wayne S., 4,301,646, Cl. 56-121.430.
Toray Industries, Incorporated: *See—*
Tanaka, Minoru; and Yagi, Kenkichi, 4,302,493, Cl. 428-91.000.
Torii, Michihiro; Goto, Hirohito; and Kihara, Utsuo, to Fuji Electrochemical Co., Ltd. Process for producing ferrite single crystal for high frequency. 4,302,279, Cl. 156-616.00R.
Toro Company, The: *See—*
Hunter, Edwin J., 4,301,967, Cl. 239-99.000.
Tothfalusi, Miklos: *See—*
Haskew, Francis A.; Jones, Leslie A.; Morris, Alan R.; Tothfalusi, Miklos; and Plummer, Derek, 4,302,054, Cl. 299-31.000.
Toyo Soda Manufacturing Co., Ltd.: *See—*
Katsuragawa, Kanzi; Sakka, Hideo; and Kihara, Keiichi, 4,302,306, Cl. 204-158.0HA.
Toyooka, Yasuo; Ohnishi, Kunio; Murase, Haruo; and Ueno, Tadaomi, to Mitsubishi Rayon Co., Ltd. Decorated synthetic resin sheet. 4,302,497, Cl. 428-203.000.
Toyota Jidosha Kogyo Kabushiki Kaisha: *See—*
Inoue, Tokuta; Nakamura, Norihiko; and Itoh, Takaaki, 4,302,405, Cl. 261-44.00C.
Kawaguchi, Hiroshi, 4,302,056, Cl. 303-6.00C.
Nakamura, Norihiko; and Kato, Takashi, 4,302,404, Cl. 261-44.00C.
Tralonga, David V. Speaker enclosure. 4,301,889, Cl. 181-145.000.
Trane, Franca: *See—*
Cozzi, Paolo; Menchetti, Piero; de Carneri, Ivo; and Trane, Franca, 4,302,472, Cl. 424-324.000.
Transnuklear GmbH: *See—*
Ahner, Stefan; Knackstedt, Hans-Gunther; and Strostlik, Peter, 4,302,680, Cl. 250-506.000.
Traskos, Richard T.: *See—*
Howe, David M.; Otto, Jeffrey B.; and Traskos, Richard T., 4,302,413, Cl. 264-126.000.
Traubel, Harro: *See—*
Pisaric, Karl H.; Weber, Karl-Arnold; Traubel, Harro; Brauner, Dieter; and Pahl, Manfred H., 4,302,550, Cl. 521-133.000.
Trombly, John E.: *See—*
Foulkes, John D.; Worthington, David K.; and Trombly, John E., 4,302,629, Cl. 179-2.0DP.
TRW Inc.: *See—*
Lillie, Charles R., 4,302,135, Cl. 408-59.000.
Tsubakimoto Chain Co.: *See—*
Kimura, Kazuo; Fujiwara, Tooru; and Harada, Norio, 4,302,197, Cl. 474-267.000.
Tsuboshima, Kosaku: *See—*
Yamazaki, Masafumi; Takayama, Shuichi; Tsuboshima, Kosaku; Nakajima, Yoshio; and Iwasawa, Teruo, 4,302,780, Cl. 358-228.000.
Tsuchida, Seiichi: *See—*
Matsuo, Kohtaro; and Tsuchida, Seiichi, 4,302,371, Cl. 260-28.50R.
Tsuchida, Tsuyoshi: *See—*
Sato, Akimune; and Tsuchida, Tsuyoshi, [illegible]01,726, Cl. 101-129.000.
Tsuetaki, George F. Fused bifocal contact lens. 4,302,081, Cl. 351-161.000.
Tsnjimoto, Michihiro; Nishizawa, Tsutomu; Hasegawa, Kiyoharu; and Abe, Nobuyoshi, to Mitsui Toatsu Chemicals, Incorporated. Chlorinated 4-methylphthalic anhydrides. 4,302,396, Cl. 260-346.300.
Tsuruoka, Takashi: *See—*
Iwamatsu, Katsuyoshi; Itoh, Jiro; Omoto, Shoji; Tsuruoka, Takashi; and Inouye, Shigeharu, 4,302,580, Cl. 544-21.000.
Tubbs, Henry, to Rolls-Royce Limited. Gas turbine engine having a cooled turbine. 4,302,148, Cl. 415-115.000.
Tubbs, Henry, to Rolls-Royce Limited. Rotor blade for a gas turbine engine. 4,302,153, Cl. 416-96.00R.
Tucker, Walter R. Rotary terminal cleaner. 4,301,567, Cl. 15-160.000.
Tuller, Harold W.; Schulze, Stephen R.; and Mason, Charles D., to Allied Corporation. Polyamide laminates containing copper salts. 4,302,511, Cl. 428-412.000.
Tulloch, Lawrence R.: *See—*
Grondin, Edward A.; Tulloch, Lawrence R.; Perkins, Martin P., Jr.; Krstovic, Alexander P.; McCoy, Bryon W.; and Morey, Kevin P., 4,301,602, Cl. 34-43.000.
Turbak, Albin F.; El-Kafrawy, Adel; Snyder, Fred W., Jr.; and Auerbach, Andrew B., to International Telephone and Telegraph Corp. Solvent system for cellulose. 4,302,252, Cl. 106-163.00R.
Turelli, Federico; and Matteini, Maurizio, to Nuovo Pignone, S.p.A. Method for arc-welding the blades to the disc or counterdisc of rotary machine rotors. 4,302,657, Cl. 219-137.00R.
Turner, James E., Jr.; and Kenoff, Michael B., to Warner-Lambert Company. Platelet reference control. 4,302,355, Cl. 252-408.000.
Tyroler, Jesse F., to United States of America, Army. Infrared reflex device. 4,302,068, Cl. 350-1.100.
Uchida, Masaaki: *See—*
Ishitani, Shigeo; Kimura, Shinji; Takao, Hiroshi; and Uchida, Masaaki, 4,302,312, Cl. 204-195.00S.
Uchidoi, Masanori: *See—*
Kawamura, Masaharu; and Uchidoi, Masanori, 4,302,083, Cl. 354-23.00D.
Uchiyama, Takashi: *See—*
Suzuki, Ryoichi; Uchiyama, Takashi; Murakami, Hiroyasu; Kawamura, Masaharu; Sakai, Shinji; and Momiyama, Kikuo, 4,302,086, Cl. 354-53.000.
Udagawa, Hideyuki; Ando, Tetsuya; and Kibayashi, Iwao, to Denki Kagaku Kogyo Kabushiki Kaisha. Cement composition containing dextrin. 4,302,251, Cl. 106-92.000.
Ueda, Hiroshi; Shimazaki, Masao; and Kuwazuru, Yasumitsu, to Taiho Kogyo Co., Ltd. Wear resistant sliding element having a low coefficient of friction. 4,302,379, Cl. 260-38.000.
Ueda, Kenji; and Sakanishi, Akihiro, to Mitsubishi Jukogyo Kabushiki Kaisha. Process for treating electrolytic solntion. 4,302,304, Cl. 204-130.000.
Uede, Hisashi: *See—*
Nakauchi, Hiroshi; Inami, Yasuhiko; Uede, Hisashi; and Wada, Tomio, 4,302,751, Cl. 340-763.000.

Ueno, Atsuyuki, to Katsyguri IJYBI. Continuous electrolytic treatment of circulating washings in the plating process and an apparatus therefor. 4,302,319, Cl. 204-238.000.
Ueno, Susumu: *See*—
Imada, Kiyoshi; Ueno, Susumu; and Abe, Tokuji, 4,302,307, Cl. 204-169.000.
Ueno, Tadaomi: *See*—
Toyooka, Yasuo; Ohnishi, Kunio; Murase, Haruo; and Ueno, Tadaomi, 4,302,497, Cl. 428-203.000.
Uhlenhoff, Arnold: *See*—
Gollinger, Wolfgang; Grosse, Joachim; and Uhlenhoff, Arnold, 4,302,690, Cl. 307-451.000.
Ukawa, Kiyoshi: *See*—
Ishiguro, Toshihiro; Ukawa, Kiyoshi; and Nohara, Akira, 4,302,463, Cl. 424-263.000.
Ukawa, Naohiko: *See*—
Atsukawa, Masumi; Matsumoto, Kazuhiro; Seto, Toru; Sera, Toshikuni; and Ukawa, Naohiko, 4,302,431, Cl. 423-239.000.
Ultimate Resources, Inc.: *See*—
Roman, Walter C., 4,302,236, Cl. 71-9.000.
Umeki, Shinji; Onuki, Kazuaki; and Maruta, Fumio, to TDK Electronics Co., Ltd. Magnetic recording medium. 4,302,510, Cl. 428-403.000.
Unicel Corporation: *See*—
Greven, Richard, 4,301,700, Cl. 83-91.000.
Union Carbide Corporation: *See*—
Curnow, Richard D.; and Cowie, Christopher G., 4,302,414, Cl. 264-137.000.
Dziak, Theodore P., 4,302,517, Cl. 429-66.000.
Evans, William P.; and Leger, Violeta Z., 4,302,520, Cl. 429-194.000.
Goeke, George L.; Wagner, Burkhard E.; and Karol, Frederick J., 4,302,565, Cl. 526-88.000.
Hart, Paul W., 4,302,547, Cl. 518-701.000.
Karol, Frederick J.; Goeke, George L.; Wagner, Burkhard E.; Fraser, William A.; Jorgensen, Robert J.; and Friis, Nils, 4,302,566, Cl. 526-125.000.
Miller, John C.; Burnett, Archibald L.; and Scarola, Leonard S., 4,302,409, Cl. 264-45.900.
Union Oil Company of California: *See*—
Erich, Otis G., Jr., 4,302,825, Cl. 367-41.000.
Simpson, Howard D.; Gowdy, Hugh W.; and Light, Steven D., 4,302,219, Cl. 48-213.000.
Young, Donald C., 4,302,237, Cl. 71-11.000.
United Aircraft Products, Inc.: *See*—
Lord, Thomas J., 4,301,831, Cl. 137-489.500.
Morales, Kenneth A., 4,302,020, Cl. 277-205.000.
United States of America
Air Force: *See*—
Buchanan, James E.; and Damon, Daniel G., 4,302,791, Cl. 361-86.000.
Chiao, Raymond Y.; Fetterman, Harold R.; and Schlossberg, Howard R., 4,302,667, Cl. 250-205.000.
Gustavson, Robert G.; and Cummings, Darold B., 4,302,796, Cl. 362-62.000.
Johnston, John T.; and Venorsky, George W., 4,302,745, Cl. 340-27.0AT.
Army: *See*—
Bly, Vincent T., 4,302,673, Cl. 250-332.000.
Cox, John T.; Garber, Michael B.; Jasper, Marilyn A.; and Longshore, Randolph E., 4,302,531, Cl. 430-317.000.
Flatau, Abraham; and Huerta, Joseph, 4,301,736, Cl. 102-503.000.
Steck, Edgar A.; and Alving, Carl R., 4,302,459, Cl. 424-258.000.
Tyroler, Jesse F., 4,302,068, Cl. 350-1.100.
Ward, Joseph R., 4,302,259, Cl. 149-61.000.
Yuhash, Ladd; and Lanizzani, Charles E., 4,301,737, Cl. 102-518.000.
Commerce: *See*—
McCarter, Robert J., 4,302,345, Cl. 252-62.000.
Energy: *See*—
Baker, Albert F.; Blaustein, Eric W.; Deurbrouck, Albert W.; Garvin, John P.; and McKeever, Robert E., 4,302,209, Cl. 44-10.00D.
Edwards, David, Jr.; and Lanni, Christopher P., 4,302,679, Cl. 250-489.000.
Lowe, Arthur T.; and Hosford, Charles D., 4,302,311, Cl. 204-192.00R.
Interior: *See*—
Bass, Dan M.; and Wang, Fun-Den, 4,302,051, Cl. 299-2.000.
Gokcen, Nev A., 4,301,676, Cl. 73-64.200.
Roepke, Wallace W.; and Wilson, Richard J., 4,302,053, Cl. 299-86.000.
National Aeronautics and Space Administration; administrator; with respect to an invention of:
McGinness, Houston D. Suspension system for a wheel rolling on a flat track. 4,301,740, Cl. 105-1.00A.
Stockton, Ronald J.; and Johnson, Russell W. Microwave switching power divider. 4,302,734, Cl. 333-104.000.
National Aeronautics and Space Administration: *See*—
Booth, Franklin W.; and Bruce, Robert A., 4,302,223, Cl. 55-158.000.
Navy: *See*—
Fry, Harold E.; and Peters, Arnold L., 4,301,761, Cl. 114-331.000.
Horan, John J., 4,301,983, Cl. 244-122.00R.
Jernigan, James L., 4,302,730, Cl. 331-94.50C.
Mussey, Richard A., 4,301,708, Cl. 89-1.810.
Peregrim, Frank; Johnson, James B.; and Winkler, Gerhard B., 4,301,734, Cl. 102-413.000.
Scarzello, John F.; Lenko, Daniel S.; Krall, Albert D.; Grine, Wayne R.; Brown, Robert E.; Usher, George W.; Mills, Milton K.; and Syeles, Albert M., 4,302,746, Cl. 340-38.00L.
Shaw, Bon F.; and Marshall, Albert H., 4,302,190, Cl. 434-18.000.
Wood, Stanley E.; and Stull, Bertram O., 4,302,208, Cl. 44-7.00D.
U.S. Philips Corporation: *See*—
Kemner, Rudolf; Kuilman, Bernardus G. J.; and Smit, Hilbrand J., 4,302,777, Cl. 358-160.000.
Tomasi, Jean-Pierre, 4,302,758, Cl. 343-9.00R.
van den Heuvel, Reinier M., 4,302,309, Cl. 204-181.00N.
Withers, Richard B., 4,301,591, Cl. 29-572.000.
United States Surgical Corporation: *See*—
Noiles, Douglas G., 4,301,553, Cl. 3-1.911.
United Technologies Corporation: *See*—
Bizzarro, Peter, 4,301,863, Cl. 165-166.000.
Dillner, James R.; and Stone, Hilton F., Jr., 4,301,584, Cl. 29-156.80B.
Full, Gary G.; and Tedeschi, Rinaldo R., 4,301,678, Cl. 73-116.000.
Full, Gary G.; and Tedeschi, Rinaldo R., 4,302,814, Cl. 364-551.000.
Hubbard, Richard G., Jr.; and Modeen, Douglas P., 4,302,770, Cl. 358-75.000.
Hunter, Alexander D., Jr.; and Dennison, William T., 4,302,062, Cl. 308-22.000.
Tedeschi, Rinaldo R.; and Full, Gary G., 4,302,815, Cl. 364-551.000.
Universal Fluid Heads (Aust.) Pty. Ltd.: *See*—
Miller, Robert E., 4,301,896, Cl. 188-70.00R.
University of Michigan, The Regents of the: *See*—
Voorhees, John J.; and Wierenga, Wendell, 4,302,456, Cl. 424-251.000.
Voorhees, John J.; and Wierenga, Wendell, 4,302,457, Cl. 424-251.000.
University of Pennsylvania: *See*—
Zemel, Jay N., 4,302,530, Cl. 430-311.000.
University of Rochester: *See*—
Young, Frank E.; Wilson, Gary A.; and Mottice, Susan L., 4,302,544, Cl. 435-253.000.
University of Sydney: *See*—
Gillings, Barrie R. D., 4,302,189, Cl. 433-189.000.
Uno, Akio: *See*—
Mikami, Yasuo; Kanda, Hiroshi; and Uno, Akio, 4,302,473, Cl. 426-46.000.
Mikami, Yasuo; Kanda, Hiroshi; and Uno, Akio, 4,302,474, Cl. 426-52.000.
Upjohn Company, The: *See*—
Pittman, Johnny M., Jr., 4,302,452, Cl. 424-243.000.
Sih, John C., 4,302,596, Cl. 562-503.000.
Voorhees, John J.; and Wierenga, Wendell, 4,302,456, Cl. 424-251.000.
Voorhees, John J.; and Wierenga, Wendell, 4,302,457, Cl. 424-251.000.
Urbanek, Karel; Kren, George J.; and Wheeler, William R., to Tencor Instruments. Non-contacting resistivity instrument with structurally related conductance and distance measuring transducers. 4,302,721, Cl. 324-226.000.
Urfer, Ernest N.: *See*—
Hetherington, Richard J.; Melvin, George E.; Milkovich, Stephen A.; and Urfer, Ernest N., 4,302,625, Cl. 174-68.500.
Urokohara, Tomio: *See*—
Abe, Michio; and Urokohara, Tomio, 4,302,136, Cl. 411-158.000.
Urquhart, William M., to Babcock & Wilcox Limited. Fluidized bed combustion. 4,301,749, Cl. 110-261.000.
Usher, George W.: *See*—
Scarzello, John F.; Lenko, Daniel S.; Krall, Albert D.; Grine, Wayne R.; Brown, Robert E.; Usher, George W.; Mills, Milton K.; and Syeles, Albert M., 4,302,746, Cl. 340-38.00L.
Ustinnikov, Boris A.: *See*—
Benyaev, Negmat E.; Boskanian, Razmik A.; Yarovenko, Viktor I.; Durbrov, Jury N.; Ustinnikov, Boris A.; Babichenko, Ljodmila V.; Vakulenko, Mikhail D.; Kramarsky, Nikolai A.; Shamrin, Vitaly F.; Karaichev, Sergei I.; Efremov, Boris V.; and Lantsetova, Tatyana N., 4,302,543, Cl. 435-161.000.
USV Pharmaceutical Corporation: *See*—
Shroff, James R.; and Loev, Bernard, 4,302,591, Cl. 546-257.000.
Socci, Robert; Gunderman, Anthony; Fotiu, Eustace; and Kabacoff, Bernard, 4,302,442, Cl. 424-61.000.
Vadas, Stephen F.: *See*—
Peers-Trevarton, Charles A.; Tarjan, Peter P.; Vadas, Stephen F.; and Dorman, Frederick S., 4,301,805, Cl. 128-419.00P.
Vaginay, Yves: *See*—
Cerutti, Claude; Goletto, Jean; Habault, Robert; and Vaginay, Yves, 4,302,507, Cl. 428-373.000.
Vakulenko, Mikhail D.: *See*—
Benyaev, Negmat E.; Boskanian, Razmik A.; Yarovenko, Viktor I.; Durbrov, Jury N.; Ustinnikov, Boris A.; Babichenko, Ljudmila V.; Vakulenko, Mikhail D.; Kramarsky, Nikolai A.; Shamrin, Vitaly F.; Karaichev, Sergei I.; Efremov, Boris V.; and Lantsetova, Tatyana N., 4,302,543, Cl. 435-161.000.
Valdiserri, Leo L.; and Bullock, Elyse M., to Borg-Warner Chemicals, Inc. Stabilized olefin polymers. 4,302,383, Cl. 260-45.80N.
Valenta, Paul: *See*—
Golimowski, Jerzy; Sipos, Laszlo; and Valenta, Paul, 4,302,314, Cl. 204-195.00R.

Valmet Oy: *See*—
Riihinen, Jaakko, 4,301,582, Cl. 29-116.0AD.
Van Allen, David: *See*—
Johnson, Bruce K.; and Van Allen, David, 4,302,795, Cl. 362-16.000.
van den Heuvel, Reinier M., to U.S. Philips Corporation. Method of manufacturing cathodes. 4,302,309, Cl. 204-181.00N.
Van den Hoven, Gerardus, to Du Pont de Nemours, E. I., and Company. Widening-narrowing guide for teatile filament bundle. 4,301,579, Cl. 28-282.000.
van der Helm, Dick: *See*—
Schmitz, Francis J.; van der Helm, Dick; Hossain, M. Bilayet; Gopichand, Yalamanchili; and Prasad, Ravi S., 4,302,470, Cl. 424-283.000.
van der Lely, Ary; and Bom, Cornelis J. G., to C. van der Lely N.V. Soil cultivating machines. 4,301,871, Cl. 172-49.500.
Van Dyk, Garritt C., Jr.: *See*—
Jukkola, Walfred W.; Leon, Albert M.; Van Dyk, Garritt C., Jr.; McCoy, Daniel E.; Fisher, Barry L.; Saiers, Timothy L.; and Karstetter, Marlin E., 4,301,771, Cl. 122-4.00D.
Vangala, V. Rao: *See*—
Hellmer, Lars; Keunecke, Gerhard; Lell, Rainer; Al-Muddarris, Ghazi R.; Pachaly, Reinhard; Stauffer, Adolf; and Vangala, V. Rao, 4,302,434, Cl. 423-573.00G.
van Heel, Joannes M., to Stichting Bouwcentrum. Apparatus for heating water in a reservoir. 4,302,406, Cl. 261-124.000.
van Mulken, Alexis J. W.: *See*—
Barends, Willem J.; and van Mulken, Alexis J. W., 4,301,943, Cl. 222-1.000.
Van Note, Robert H., to Envirotech Corporation. Geothermal brine treatment. 4,302,328, Cl. 210-714.000.
Van Osten, Don E.: *See*—
Bohorquez, Luis A.; Cleary, Michael M.; Ash, Charles C.; Van Osten, Don E.; Pounds, Robert B.; and Sallach, John H., 4,301,709, Cl. 89-11.000.
Van Sickle, Norman E. Tracer bullet. 4,301,732, Cl. 102-430.000.
VanSlooten, Roland W.: *See*—
Donnelly, Bernard P.; and VanSlooten, Roland W., 4,302,140, Cl. 414-46.000.
Vapor Corporation: *See*—
Barry, William L., 4,302,159, Cl. 417-46.000.
Varcoe, Beaumont B.: *See*—
Beaven, John P.; and Varcoe, Beaumont B., 4,301,848, Cl. 150-1.000.
Varo Semiconductor, Inc.: *See*—
Wills, Walter L., 4,302,651, Cl. 219-10.55B.
Vasile, Carmine F.: *See*—
Thompson, Robert B.; Vasile, Carmine F.; and Houston, Roger B., 4,301,684, Cl. 73-602.000.
Vaughn, James V.: *See*—
Burton, Robert S.; Rundberg, Sten I.; Vaughn, James V.; Williams, Thomas P.; and Benson, Gregory C., 4,301,866, Cl. 166-260.000.
Vaughn, Walter L., to Dow Chemical Company, The. Reactive cyclobutanone-containing polymers and method for preparing same. 4,302,563, Cl. 525-330.000.
VDO Adolf Schindling AG: *See*—
Collonia, Harald, 4,301,883, Cl. 180-179.000.
Veba Oel AG: *See*—
Escher, Gerd; Harjung, Johann; and Wenning, H. Peter, 4,302,353, Cl. 252-373.000.
Velan, Baruch: *See*—
Halmann, Mirjam; Velan, Baruch; and Seri, Tamar, 4,302,534, Cl. 435-6.000.
Venorsky, George W.: *See*—
Johnston, John T.; and Venorsky, George W., 4,302,745, Cl. 340-27.0AT.
Verschuur, Eke, to Shell Oil Company. Process for improving flow characteristics of coal produced by dewatering aqueous coal slurries. 4,302,211, Cl. 44-24.000.
Vetter, Hans: *See*—
Dengler, Wolfgang; and Vetter, Hans, 4,302,123, Cl. 402-80.00R.
Vezie, Richard L. Camera for recording solar access to a site. 4,302,088, Cl. 354-107.000.
Vicari, Ronald P.; and Yampol, Barry, to Graphic Scanning, Inc. Digitally-controlled telephone answering switching system. 4,302,632, Cl. 179-27.0FH.
Vicenzi, Reno L.; and Smargiassi, Paul R., to Bourns Medical Systems, Inc. Flow detector. 4,302,640, Cl. 200-81.00R.
Vidal, Jean A. Stretcher for the mounting and stretching of e canvas, particularly for fine art. 4,301,853, Cl. 160-374.100.
Voest-Alpine Aktiengesellschaft: *See*—
Althaler, Wilhelm; and Zitz, Alfred, 4,302,133, Cl. 405-290.000.
Volkamer, Klaus; Wagner, Ulrich; and Wagner, Eckhart, to BASF Aktiengesellschaft. Simultaneous removal of water and hydrogen sulfide from gases. 4,302,220, Cl. 55-32.000.
Voltz, Sterling E.: *See*—
Gross, Benjamin; and Voltz, Sterling E., 4,302,619, Cl. 585-408.000.
Von Hagel, Leo, to Maxcap, Inc. Blow molded plastic bottle and plastic cap. 4,301,937, Cl. 215-252.000.
Vonlanthen, Alfred; and Lienhard, Heinz, to Werkzeugmaschinenfabrik Oerlikon-Buhrle AG. Flexible ammunition channel. 4,301,711, Cl. 89-33.0BB.
von Waclawiczek, Herbert; and Jager, Walter, to GHT, Gesellschaft fur Hochtemperatur-Technik mbH. Apparatus for the catalytic cracking of gases. 4,302,292, Cl. 376-325.000.
Yoorhees, John J.; and Wierenga, Wendell, to Upjohn Company, The; and University of Michigan, The Regents of the. Process for therapeutic treatment. 4,302,456, Cl. 424-251.000.
Voorhees, John J.; and Wierenga, Wendell, to Upjohn Company, The; and University of Michigan, The Regents of the. Process for therapeutic treatment. 4,302,457, Cl. 424-251.000.
Vopilov, Alexandr N.: *See*—
Chernogorenko, Vasily B.; Alzhanov, Tleubai M.; Lynchak, Kima A.; Muchnik, Simon V.; Ishkhanov, Evgeny S.; Sergienko, Vladimir Y.; Sapian, Vladimir G.; Koverya, Vladimir M.; Pobortsev, Mendel E.; Markovsky, Evgeny A.; Dmitrenko, Valentina V.; Byknov, Vladimir I.; Kipchakbaev, Alexandr D.; and Vopilov, Alexandr N., 4,302,249, Cl. 75-143.000.
Vorwerk & Co. Interholding GmbH: *See*—
Eckart, Manfred; and Wulf, Peter, 4,302,225, Cl. 55-234.000.
Vos, Leroy A., to Magnetic Peripherals Inc. Disc memory head arm lift mechanism. 4,302,789, Cl. 360-105.000.
Voth, Harold W.; King, John T.; and Guinn, Ronald K., to Hesston Corporation. Forage chopping cylinder. 4,301,647, Cl. 56-504.000.
Vucins, Viesturs J., to Telefonaktiebolaget L M Ericsson. Device for tapping scattered light from a joint in an adjustable connector for two optical fibre waveguides. 4,302,072, Cl. 350-96.210.
Vuorento, Lasse T. J. Disposable portion package. 4,301,923, Cl. 206-484.000.
Wachta, Zygmunt: *See*—
Abrams, Richard F.; Motew, Stuart; Wojnarowski, Robert; and Wachta, Zygmunt, 4,302,419, Cl. 422-62.000.
Wada, Tomio: *See*—
Nakauchi, Hiroshi; Inami, Yasuhiko; Uede, Hisashi; and Wada, Tomio, 4,302,751, Cl. 340-763.000.
Weddell, Gerald E.; Windler, Clayton W.; and Swint, Ronnie K., to Kansa Corporation. Paper sheet material handling cart having central brake assembly. 4,302,025, Cl. 280-79.10A.
Wadhwani, Romesh T.; and Russial, Joseph F., to Compuguard Corporation. Distribution automation system. 4,302,750, Cl. 340-870.020.
Waeschle Maschinenfabrik GmbH: *See*—
Krambrock, Wolfgang; and Eberhard, Nobert, 4,301,880, Cl. 177-189.000.
Wagner, Alan D.: *See*—
Stark, Gary M.; and Wagner, Alan D., 4,302,102, Cl. 355-72.000.
Wagner, Burkhard E.: *See*—
Goeke, George L.; Wagner, Burkhard E.; and Karol, Frederick J., 4,302,565, Cl. 526-88.000.
Karol, Frederick J.; Goeke, George L.; Wagner, Burkhard E.; Fraser, William A.; Jorgensen, Robert J.; and Friis, Nils, 4,302,566, Cl. 526-125.000.
Wagner, Eckhart: *See*—
Volkamer, Klaus; Wagner, Ulrich; and Wagner, Eckhart, 4,302,220, Cl. 55-32.000.
Wagner Electric Corporation: *See*—
Demas, Nickolas P.; Bair, James E.; and Grunder, Robert A., 4,302,697, Cl. 313-113.000.
DuBois, Richard, 4,302,706, Cl. 315-169.100.
Wagner, James A. Prefabricated module and method for making archways through building internal walls. 4,301,632, Cl. 52-211.000.
Wagner, Robert L.: *See*—
Hastings, Dawson W.; and Wagner, Robert L., 4,301,872, Cl. 172-290.000.
Wagner, Ulrich: *See*—
Volkamer, Klaus; Wagner, Ulrich; and Wagner, Eckhart, 4,302,220, Cl. 55-32.000.
Wahl, Geoffrey M.; and Stark, George R., to Leland Stanford Junior University, The Board of Trustees of. Transfer and detection of nucleic acids. 4,302,204, Cl. 23-230.300.
Wahle, Gunter; Greve, Heinz; and Berlin, Herbert, to Hauni-Werke Korber & Co. KG. Method of making rod-shaped smokers' products with multiplex filter mouthpieces. 4,301,816, Cl. 131-88.000.
Wahpeton Canvas Company, Inc.: *See*—
Dimmer, Jerry R.; Ponto, Gene D.; Shorma, Edward F.; Shorma, Richard E.; Shorma, William J.; and Miranowski, Duaine L., 4,302,043, Cl. 296-98.000.
Wainwright, Basil E. Ignition system. 4,301,782, Cl. 123-620.000.
Wakayama, Naoaki; Tomoda, Toshimasa; and Fukakusa, Shinji, to Mitsubishi Denki Kabushiki Kaisha; and Japan Atomic Energy Research Institute. Gamma-ray compensated ionization chamber. 4,302,696, Cl. 313-93.000.
Wake, Robert H.; Gottschalk, Stephen C.; and Smith, Kendall A., to Technicare Corporation. Method of multiplanar emission tomography and apparatus therefor. 4,302,675, Cl. 250-363.00S.
Walker, Frank H., to General Motors Corporation. Single rotor engine with turbine exhausting to subatmospheric pressure. 4,301,649, Cl. 60-39.070.
Walker, Kenneth L.: *See*—
MacChesney, John B.; Simpson, Jay R.; and Walker, Kenneth L., 4,302,230, Cl. 65-3.120.
Walker, Loren H.: *See*—
Cutler, John H.; and Walker, Loren H., 4,302,713, Cl. 318-801.000.
Walkowiak, Michael; Podszun, Wolfgang; Leusner, Bernhard; Suling, Carlhans; and Schulz, Hans H., to Bayer Aktiengesellschaft. Dental materials which are opaque to X-rays and are based on organic plastics in paste form. 4,302,376, Cl. 260-29.7UA.
Wallace, Clarence L. Manufacture of multi-layered electrical assemblies. 4,301,580, Cl. 29-25.420.
Wallach, David: *See*—
Revel, Michel; Kimchi, Adi; Shulman, Lester; and Wallach, David, 4,302,533, Cl. 435-4.000.

Waller, Henry A., to Consolidated Controls Corporation. Gate valve. 4,301,993, Cl. 251-167.000.
Wallshein, Melvin. Orthodontic bracket with protective insert or liner. 4,302,532, Cl. 433-8.000.
Walraven, Hank. Nonclogging drain structure. 4,301,557, Cl. 4-286.000.
Walsh, Dennis E.: *See—*
  Chen, Nai Y.; and Walsh, Dennis E., 4,302,324, Cl. 208-131.000.
Walter, Thomas G., to B. Walter & Company, Inc. Table slide device. 4,301,744, Cl. 108-77.000.
Walter, Wolfgang, to Zahnradfabrik Friedrichshafen, AG. Rack steering mechanism. 4,301,691, Cl. 74-422.000.
Wang, Fun-Den: *See—*
  Bass, Dan M.; and Wang, Fun-Den, 4,302,051, Cl. 299-2.000.
Ward, Gary A., to Baxter Travenol Laboratories, Inc. Method of assembling an injection site to a support tube. 4,301,590, Cl. 29-450.000.
Ward, Joseph R., to United States of America, Army. MgH_2 and $Sr(NO_3)_2$ pyrotechnic composition. 4,302,259, Cl. 149-61.000.
Ward, Lowell G.: *See—*
  Steinberg, Albert H.; and Ward, Lowell G., 4,302,269, Cl. 156-243.000.
Ward, Phillip B., Jr.: *See—*
  Palmer, John P.; and Ward, Phillip B., Jr., 4,302,267, Cl. 156-158.000.
Ware, Frederick A., to Hewlett-Packard Company. Fault tolerant monolithic multiplier. 4,302,819, Cl. 364-737.000.
Warner, Frederick L.: *See—*
  Jaffe, Erwin; Matalia, Harshad; Rinehart, William D.; Warner, Frederick L.; Navi, Menashe; and Merker, George, 4,301,728, Cl. 101-220.000.
Warner-Lambert Company: *See—*
  Turner, James E., Jr.; and Kenoff, Michael B., 4,302,355, Cl. 252-408.000.
Warren, Jack L., to Suzi Light Corporation. Oil filled switch mechanism and uses therefore. 4,302,741, Cl. 335-131.000.
Washecheck, Paul H., to Conoco Inc. Traction fluid. 4,302,618, Cl. 585-1.000.
Washecheck, Paul H.: *See—*
  Yang, Kang; Nield, Gerald L.; and Washecheck, Paul H., 4,302,613, Cl. 568-618.000.
Watanabe, Shinichi: *See—*
  ~~Yamamura, Masaaki~~; Moriyama, Noboru; and Watanabe, Shinichi, 4,302,212, Cl. 44-51.000.
Watson, Frederick D.; Mayse, Weldon D.; and Franse, Albert D., to Petrolite Corporation. Radial flow electrofilter. 4,302,310, Cl. 204-186.000.
Watson, Jimmie L., to Halliburton Company. Gelled aqueous well treating fluids. 4,302,341, Cl. 252-8.55R.
Watts, John C.: *See—*
  Lawes, Bernard C.; and Watts, John C., 4,302,429, Cl. 423-17.000.
Wayland, Paul O.: *See—*
  Hruda, Robert M.; and Wayland, Paul O., 4,302,642, Cl. 200-144.00B.
Weatherby, Inc.: *See—*
  Peterson, Ronald W.; and Jennie, Fred, 4,301,609, Cl. 42-69.00A.
Weaver, Marvin P., to Robertshaw Controls Company. Method of making a valve construction having multiple piston means. 4,301,586, Cl. 29-157.10R.
Weaver, Max A.: *See—*
  Giles, Ralph R.; and Weaver, Max A., 4,302,387, Cl. 260-155.000.
  Giles, Ralph R.; and Weaver, Max A., 4,302,390, Cl. 260-158.000.
Weber, Heinrich; and Laufhutte, Dieter, to Carl Still GmbH & Co. KG, Firma. Process for releasing ammonia bound in coal water. 4,302,430, Cl. 423-234.000.
Weber, Karl-Arnold: *See—*
  Pisaric, Karl H.; Weber, Karl-Arnold; Traubel, Harro; Brauner, Dieter; and Pahl, Manfred H., 4,302,550, Cl. 521-133.000.
Weber-Stephen Products Co.: *See—*
  Schlosser, Eric J., 4,302,181, Cl. 431-264.000.
Weber, Ursula: *See—*
  Bruns, Klaus; and Weber, Ursula, 4,302,363, Cl. 252-522.00R.
Weddle, Carol D. Floral cart. 4,302,024, Cl. 280-47.330.
Wei, Peter H. L.; and Bell, Stanley C., to American Home Products Corporation. 3-Hydroxy-3-substituted phenylthiazolo[2,3-b]quinazoline-2-alkanoic acids and their lactones. 4,302,585, Cl. 544-247.000.
Weibull, John L. Aiming and gunnery training apparatus. 4,302,191, Cl. 434-20.000.
Weidinger, Friedrich: *See—*
  Ahne, Hellmut; Aulich, Hubert; Weidinger, Friedrich; and Rubner, Roland, 4,302,233, Cl. 501-3.430.
Weigele, Gebhard. Apparatus for controlling the movements of a roller-like horizontal rotary washing brush in motor vehicle washing apparatus. 4,301,566, Cl. 15-53.00A.
Weiler, Ernest D.: *See—*
  Miller, George A.; and Weiler, Ernest D., 4,302,240, Cl. 71-090.000.
Weinbaum, Irwin. Method and system for the removal and replacement of a bridge. 4,301,565, Cl. 14-1.000.
Weirich, Walter; and Hennlich, Gunther, to Gewerkschaft Eisenhutte Westfalia. Hydraulic coupling device. 4,302,034, Cl. 285-26.000.
Weitemeyer, Christian; Kropac, Vaclav; and Priesch, Manfred, to Th. Goldschmidt AG. Preparation for the abhesive coating of baking tins, cake tins, frying pans, metal pots, and the like. 4,302,512, Cl. 428-447.000.
Weitzler, David A. Electronic reminder. 4,302,752, Cl. 340-309.100.
Welton, Barry S.; and Westerman, G. Wayne, to End Devices, Inc. High fluid level pump off controller and process. 4,302,157, Cl. 417-12.000.
Weltronic Company: *See—*
  Denning, Erwin E.; and Beltz, William L., 4,302,653, Cl. 219-110.000.
Wenning, H. Peter: *See—*
  Escher, Gerd; Harjung, Johann; and Wenning, H. Peter, 4,302,353, Cl. 252-373.000.
Werber, Gerhardt P., to Eschem Inc. Reactive plasticizer for anaerobic adhesives. 4,302,570, Cl. 526-320.000.
Werkzeugmaschinenfabrik Oerlikon-Buhrle AG: *See—*
  Vonlanthen, Alfred; and Lienhard, Heinz, 4,301,711, Cl. 89-33.0BB.
Werner & Pfleiderer: *See—*
  Grimminger, Albert; and Wiedmann, Werner, 4,302,143, Cl. 414-173.000.
Westerman, G. Wayne: *See—*
  Welton, Barry S.; and Westerman, G. Wayne, 4,302,157, Cl. 417-12.000.
Western Electric Co., Inc.: *See—*
  Johnson, Anderson F., Jr.; and Reinhard, Fred J., 4,302,134, Cl. 406-51.000.
  Monson, Randy R.; and O'Neal, Robert L., 4,302,067, Cl. 339-275.00R.
  Taylor, Thomas J., 4,302,065, Cl. 339-17.00F.
Westinghouse Electric Corp.: *See—*
  Finlayson, James W.; Reyes, Renato D.; Eberle, Ralph F.; Wojcik, Thaddeus A.; Gumbert, James L.; McKeever, Robert B.; Nagy, Emery E.; and Houserman, Howard E., Jr., 4,302,146, Cl. 414-744.00R.
  Grunert, Kurt A.; Henwood, John J.; and DeVault, Birch L., 4,302,650, Cl. 200-308.000.
  Hruda, Robert M.; and Wayland, Paul O., 4,302,642, Cl. 200-144.00B.
  LaCoste, Bernard L., 4,302,682, Cl. 290-1.00R.
  Lefebvre, Bernard J.; and Krueger, William H., 4,302,286, Cl. 376-249.000.
  Maier, Alfred E.; Ricci, Louis N.; and Haugh, Charles E., 4,302,740, Cl. 335-21.000.
  Putman, Thomas H.; and Ramey, Donald G., 4,302,715, Cl. 323-210.000.
Westley, John: *See—*
  Comai, Karen; Sullivan, Ann; and Westley, John, 4,302,450, Cl. 424-181.000.
Westvaco Corporation: *See—*
  Alexander, Richard O.; Gilbert, Earl F.; and Kelly, Frederic J., 4,301,960, Cl. 229-30.000.
Weyland, Peter: *See—*
  Horn, Peter; Hesse, Anton; Weyland, Peter; Straehle, Wolfgang; and Marx, Matthias, 4,302,551, Cl. 521-163.000.
Wheeler, William R.: *See—*
  Urbanek, Karel; Kren, George J.; and Wheeler, William R., 4,302,721, Cl. 324-226.000.
Whirlpool Corporation: *See—*
  Dingler, Geoffrey L., 4,301,822, Cl. 134-176.000.
White, Alan D., to Bell Telephone Laboratories, Incorporated. Photolithographic projection apparatus using light in the far ultraviolet. 4,302,079, Cl. 350-371.000.
White, Dean J.: *See—*
  Hogseth, Steven W.; Loff, Carl W.; and White, Dean J., 4,302,172, Cl. 425-154.000.
Whiting, Roger: *See—*
  Kluge, Arthur F.; Strosberg, Arthur M.; Whiting, Roger; and Christie, George, 4,302,469, Cl. 424-273.00R.
Whitnah, Gordon R., to Environ Electronic Laboratories, Inc. Vapor-jet heat pump. 4,301,662, Cl. 62-238.400.
Widergren, Robert D.; Chen, Wen-Hsiung; Fralick, Stanley C.; and Tescher, Andrew G., to Compression Labs, Inc. Digital video compression system and methods utilizing scene adaptive coding with rate buffer feedback. 4,302,775, Cl. 358-136.000.
Wiedmann, Werner: *See—*
  Grimminger, Albert; and Wiedmann, Werner, 4,302,143, Cl. 414-173.000.
Wieland, Kurt H., to Garrett Corporation, The. Centrifugal compressor with diffuser. 4,302,150, Cl. 415-207.000.
Wienhoefer, Ekkehard: *See—*
  Kosswig, Kurt; and Wienhoefer, Ekkehard, 4,302,349, Cl. 252-174.210.
Wierenga, Wendell: *See—*
  Voorhees, John J.; and Wierenga, Wendell, 4,302,456, Cl. 424-251.000.
  Voorhees, John J.; and Wierenga, Wendell, 4,302,457, Cl. 424-251.000.
Wilcox, Frederick. Key bracelet. 4,301,664, Cl. 63-1.00R.
Wilder, Harry D.: *See—*
  Blitzer, Sidney M.; and Wilder, Harry D., 4,302,283, Cl. 162-158.000.
Wilks, Gerhard; Grossmann, Gunter; and Sanz, Franz. Connectors. 4,302,124, Cl. 403-391.000.
Williams, Eric B., to Portage Newspaper Supply Company. Photographic direct-print system. 4,302,100, Cl. 355-68.000.
Williams, Frank J.; III; and Dellacoletta, Brent A., to General Electric Company. Method for making alkali metal bisphenoxide salts and bisimides derived therefrom. 4,302,616, Cl. 568-722.000.

Williams, Joel L.: *See—*
  Dudley, Betty J., deceased; and Williams, Joel L., 4,302,368, Cl. 260-17.40R.
Williams, Samuel D. Gunpowder fueled internal combustion engine. 4,301,774, Cl. 123-23.000.
Williams, Thomas P.: *See—*
  Burton, Robert S.; Rundberg, Sten I.; Vaughn, James V.; Williams, Thomas P.; and Benson, Gregory C., 4,301,866, Cl. 166-260.000.
Willinger, Allan H.; and Itakura, Tsuyoshi. Holding clamp for an aquarium beater. 4,301,767, Cl. 119-5.000.
Wills, Walter L., to Varo Semiconductor, Inc. High-voltage SCR circuit for microwave oven and the like. 4,302,651, Cl. 219-10.55B.
Wilson, Gary A.: *See—*
  Young, Frank E.; Wilson, Gary A.; and Mottice, Susan L., 4,302,544, Cl. 435-253.000.
Wilson, Kermit H., to Sico Incorporated. Guard rails for portable stages. 4,301,627, Cl. 52-6.000.
Wilson, Richard J.: *See—*
  Roepke, Wallace W.; and Wilson, Richard J., 4,302,053, Cl. 299-86.000.
Windler, Clayton W.: *See—*
  Waddell, Gerald E.; Windler, Clayton W.; and Swint, Ronnie K., 4,302,025, Cl. 280-79.10A.
Wingard, Robert E.: *See—*
  Dawson, Daniel J.; Wingard, Robert E.; and Crosby, Guy A., 4,302,399, Cl. 260-377.000.
Winkler & Dunnebier Maschinenfabrik und Eisengiesserei GmbH & Co. KG: *See—*
  Fuchs, Siegfried, 4,301,701, Cl. 83-349.000.
Winkler, Gerhard B.: *See—*
  Peregrim, Frank; Johnson, James B.; and Winkler, Gerhard B., 4,301,734, Cl. 102-413.000.
Winters, Frederic T., to American Can Company. Method for recovering zinc and zinc alloys from automobile scrap. 4,302,245, Cl. 75-86.000.
Winzer, Gerhard, to Siemens Aktiengesellschaft. Adjustable directional coupler for light waveguides. 4,302,071, Cl. 350-96.200.
Wissel, Brigitte: *See—*
  Fischer, Wolfgang; and Wissel, Brigitte, 4,302,480, Cl. 427-2.000.
Withers, Richard B., to U.S. Philips Corporation. Method of manufacturing infra-red detector elements. 4,301,591, Cl. 29-572.000.
Wittmann, Heinz: *See—*
  Himmetsberger, Alois; and Wittmann, Heinz, 4,302,027, Cl. 280-618.000.
Wojcicki, Mario J. Drain trap. 4,301,554, Cl. 4-206.000.
Wojcik, Thaddeus A.: *See—*
  Finlayson, James W.; Reyes, Renato D.; Eberle, Ralph F.; Wojcik, Thaddeus A.; Gumbert, James L.; McKeever, Robert B.; Nagy, Emery E.; and Houserman, Howard E., Jr., 4,302,146, Cl. 414-744.00R.
Wojnarowski, Robert: *See—*
  Abrams, Richard F.; Motew, Stuart; Wojnarowski, Robert; and Wachta, Zygmunt, 4,302,419, Cl. 422-62.000.
Wolf, Elmar: *See—*
  Gras, Rainer; and Wolf, Elmar, 4,302,351, Cl. 252-182.000.
Wood, John R.; and Beaulieu, Joseph B. S., to Domtar Inc. Measurement of high consistency. 4,301,675, Cl. 73-56.000.
Wood, Loren E.; Allen, Jerome D.; Clift, Miner E.; Kays, Jerry W.; and Forsythe, Calvin C., to BS&B Safety Systems, Inc. Safety pressure relief device. 4,301,938, Cl. 220-89.00A.
Wood, Stanley E.; and Stull, Bertram O., to United States of America, Navy. Gelled FAE fuel. 4,302,208, Cl. 44-7.00D.
Woodsford, Peter A.; and Ewen-Smith, Beverley M., to Laser-Scan Laboratories Limited. Opto-electronic reading apparatus. 4,302,681, Cl. 250-556.000.
Worthington, David K.: *See—*
  Foulkes, John D.; Worthington, David K.; and Trombly, John E., 4,302,629, Cl. 179-2.0DP.
Wright Manufacturing Company: *See—*
  London, James T., 4,301,552, Cl. 3-1.910.
Wuest, Hans: *See—*
  Buchi, George H.; and Wuest, Hans, 4,302,607, Cl. 568-352.000.
Wulf, Peter: *See—*
  Eckart, Manfred; and Wulf, Peter, 4,302,225, Cl. 55-234.000.
Wulff, Karl: *See—*
  Gundermann, Karl-Dietrich; Wulff, Karl; Staehler, Fritz; and Linke, Hans-Ralf, 4,302,537, Cl. 435-7.000.
Xerox Corporation: *See—*
  Burnham, Robert D.; Scifres, Donald R.; and Streifer, William, 4,302,729, Cl. 331-94.50H.
  Gundlach, Robert W.; and Bergen, Richard F., 4,302,094, Cl. 355-3.0DD.
  Gunning, William F.; and Lavalle, Pierre A., 4,302,782, Cl. 358-296.000.
Yagi, Kenkichi: *See—*
  Tanaka, Minoru; and Yagi, Kenkichi, 4,302,493, Cl. 428-91.000.
Yamada, Hirotada; Nakagome, Takenari; and Komatsu, Toshiaki, to Sumitomo Chemical Company, Limited. Cephalosporins. 4,302,454, Cl. 424-246.000.
Yamaga, Makoto: *See—*
  Kasamatsu, Yutaka; Ishioka, Senri; Yamaga, Makoto; Hirano, Hiromichi; and Ihara, Hitoshi, 4,302,248, Cl. 75-128.00A.
Yamagata, Sen: *See—*
  Handa, Hajime; Yonekawa, Yasuhiro; Yamagata, Sen; Taki, Waro; Ikada, Yoshito; and Iwata, Hiroo, 4,301,803, Cl. 128-349.00B.
Yamaguchi Kikai Kogyo Kabushiki Kaisha: *See—*
  Ogawa, Taihei; Kubota, Seizo; Murata, Mineo; and Sekita, Shigeru, 4,302,132, Cl. 405-269.000.
Yamaguchi, Yoshimasa; and Iino, Akira, to Silver Seiko, Ltd. Hand weaving apparatus. 4,301,839, Cl. 139-29.000.
Yamamoto, Haruo, to Casio Computer Co., Ltd. Key input control apparatus. 4,302,816, Cl. 364-709.000.
Yamamoto, Yoichi, to Sharp Kabushiki Kaisha. Ink jet system printer of the charge amplitude controlling type capable of printing different size characters. 4,302,761, Cl. 346-75.000.
Yamamoto, Yoshinori, to Sony Corporation. Reversible cassette-type recording and/or reproducing apparatus. 4,302,788, Cl. 360-96.600.
Yamamura, Masaaki; Moriyama, Noboru; and Watanabe, Shinichi, to Kao Soap Company, Limited. Dispersing agents for an aqueous slurry of coal powder. 4,302,212, Cl. 44-51.000.
Yamashita, Keitaro: *See—*
  Tanaka, Shigeo; and Yamashita, Keitaro, 4,302,837, Cl. 370-69.000.
Yamauchi, Junichi: *See—*
  Omura, Ikuo; Yamauchi, Junichi; Nagase, Yoshinori; and Shibatani, Kyoichiro, 4,302,381, Cl. 260-42.150.
Yamazaki, Masafumi; Takayama, Shuichi; Tsuboshima, Kosaku; Nakajima, Yoshio; and Iwasawa, Teruo, to Olympus Optical Company Limited. Photometric system. 4,302,780, Cl. 358-228.000.
Yamoto, Hisayoshi: *See—*
  Ohuchi, Norikazu; Yamoto, Hisayoshi; Hayashi, Hisao; and Matsushita, Takeshi, 4,302,763, Cl. 357-16.000.
Yampol, Barry: *See—*
  Vicari, Ronald P.; and Yampol, Barry, 4,302,632, Cl. 179-27.0FH.
Yang, Elmer C., to Pacific Scientific Company. Dual tension strap retractor. 4,301,977, Cl. 242-107.000.
Yang, Kang; Nield, Gerald L.; and Washecheck, Paul H., to Conoco Inc. Inorganic catalyst for alkoxylation of alcohols. 4,302,613, Cl. 568-618.000.
Yardley, James F.: *See—*
  Simkins, Roy; and Yardley, James F., 4,302,261, Cl. 156-64.000.
Yarovenko, Viktor I.: *See—*
  Benyaev, Negmat E.; Boskanian, Razmik A.; Yarovenko, Viktor I.; Durbrov, Jury N.; Ustinnikov, Boris A.; Babichenko, Ljudmila V.; Vakulenko, Mikhail D.; Kramarsky, Nikolai A.; Shamrin, Vitaly F.; Karaichev, Sergei I.; Efremov, Boris V.; and Lantsetova, Tatyana N., 4,302,543, Cl. 435-161.000.
Yasuda, Hyo: *See—*
  Mori, Kenzo; and Yasuda, Hyo, 4,302,759, Cl. 343-121.000.
Yasunaga, Makoto; and Kurihara, Toshio, to Citizen Watch Co., Ltd. System for driving print wires for printers. 4,302,115, Cl. 400-124.000.
Yates, David B.: *See—*
  Davies, Roy V.; Fraser, James; Nichol, Kenneth J.; Parkinson, Raymond; Sim, Malcolm F.; and Yates, David B., 4,302,460, Cl. 424-258.000.
Yeda Research & Development Co. Ltd.: *See—*
  Revel, Michel; Kimchi, Adi; Shulman, Lester; and Wallach, David, 4,302,533, Cl. 435-4.000.
Yefsky, Sheldon A. Rechargeable battery charger system for charging testing, rejuvenation and preventative maintenance. 4,302,714, Cl. 320-5.000.
Ylonen, Erkki. Automatic firing for clay pigeon launcher. 4,302,749, Cl. 367-198.000.
Yokoyama, Isao; and Ono, Takeshi, to Coca-Cola Company, The. Process for extracting anthocyanin-type colors from natural products. 4,302,200, Cl. 8-438.000.
Yonekawa, Yasuhiro: *See—*
  Handa, Hajime; Yonekawa, Yasuhiro; Yamagata, Sen; Taki, Waro; Ikada, Yoshito; and Iwata, Hiroo, 4,301,803, Cl. 128-349.00B.
Yonezawa, Keitaro. Die lifter unit. 4,301,673, Cl. 72-448.000.
Yoon, Han S. Removable attachment for partial denture. 4,302,187, Cl. 433-172.000.
Yoshida, Hajime, to Hajime Industries Ltd. Defect inspection system. 4,302,773, Cl. 358-106.000.
Yoshiie, Shigeo: *See—*
  Hirata, Tadashi; Hashimoto, Yukio; Matsukuma, Ikuo; Yoshiie, Shigeo; and Takasawa, Seigo, 4,302,541, Cl. 435-119.000.
Yoshikawa, Syuich: *See—*
  Suzaki, Kazuo; Koda, Hirokazu; Nakamura, Kenichi; Yoshikawa, Syuich; and Ohara, Naoki, 4,301,754, Cl. 112-158.00E.
Yoshimura, Isao; Hata, Hideo; and Kaneko, Takashi, to Asahi-Dow Limited. Cold drawn film made of an ethylene polymer blend composition. 4,302,557, Cl. 525-211.000.
Yoshino Kogyosho Co., Ltd.: *See—*
  Yoshino, Yataro, 4,301,933, Cl. 215-1.00C.
Yoshino, Tetsuo; Sawano, Tsuyotake; and Takeuchi, Tokuo, to Nippon Electric Co., Ltd. Semiconductor switch. 4,302,687, Cl. 307-252.00G.
Yoshino, Yataro, to Yoshino Kogyosho Co., Ltd. Synthetic resin thin-walled bottle. 4,301,933, Cl. 215-1.00C.
Young, Don L., Jr.: *See—*
  Schimmel, Morry L.; and Young, Don L., Jr., 4,301,707, Cl. 89-1.00B.
Young, Donald C., to Union Oil Company of California. Sulfur product and method. 4,302,237, Cl. 71-11.000.
Young, Frank E.; Wilson, Gary A.; and Mottice, Susan L., to University of Rochester. Asporogenous mutant of *B. subtilis* for use as host component of HV1 system. 4,302,544, Cl. 435-253.000.
Young, Terrill A., to Procter & Gamble Company, The. Method of and apparatus for making imprinted paper. 4,302,282, Cl. 162-111.000.
Youngborg, Lamont H., to General Electric Company. Fluid level control system. 4,302,288, Cl. 376-210.000.
Yount, Velma Ann M. Occasional chair. 4,302,048, Cl. 297-440.000.

Yu, Hwa N.: *See—*
Fang, Frank F.; and Yu, Hwa N., 4,302,764, Cl. 357-23.000.
Yuhash, Ladd; and Lanizzani, Charles E., to United States of America, Army. Multi-purpose kinetic energy projectile. 4,301,737, Cl. 102-518.000.
Zaderej, Andrew, to Corson, Claude E. Electrogenic seed treater. 4,302,670, Cl. 250-324.000.
Zahnradfabrik Friedrichshafen, AG.: *See—*
Walter, Wolfgang, 4,301,691, Cl. 74-422.000.
Zalas, John M., to Lord Corporation. Sound-absorbing panel. 4,301,890, Cl. 181-286.000.
Zanchi, Vittorio; and Maccianti, Tiziano, to Honeywell Information Systems Italia. Multilevel interrupt handling apparatus. 4,302,808, Cl. 364-200.000.
Zarudiansky, Alain. Remote handling devices. 4,302,138, Cl. 414-5.000.
Zech, Karl, to Byk Gulden Lomberg Chemische Fabrik GmbH. Antigen, antiserum and immunoassay for theophylline. 4,302,438, Cl. 424-1.000.
Zehle, Adolf M.: *See—*
Gersbach, John E.; Kim, Ick W.; and Zehle, Adolf M., 4,302,823, Cl. 365-190.000.
Zeman, Leos J.: *See—*
Jakabhazy, Stephen Z.; and Zeman, Leos J., 4,302,334, Cl. 210-500.200.
Zemanek, Josef, to Siemens Aktiengesellschaft. Method and circuit arrangement for clock synchronization in the transmission of digital information signals. 4,302,831, Cl. 375-111.000.
Zemel, Jay N., to University of Pennsylvania. Method for making substance-sensitive electrical structures by processing substance-sensitive photoresist material. 4,302,530, Cl. 430-311.000.
Zenith Radio Corporation: *See—*
Tanaka, Akio, 4,302,778, Cl. 358-195.100.
Zeto Industries, Inc.: *See—*
Fitzgerald, John E., 4,301,731, Cl. 102-330.000.
Zeunen, Barthel. Precision contact printer. 4,302,103, Cl. 355-84.000.
Zhestkov, Vitaly I.; Shlykov, Gennady N.; Dyachkov, Vasily M.; Tikhonov, Valentin N.; and Abduganiev, Abdurakhim. Sliver condenser for open-end spinning machines. 4,301,574, Cl. 19-288.000.
Ziecker, Roger A.: *See—*
Cooley, Jack S.; and Ziecker, Roger A., 4,301,912, Cl. 198-436.000.
Zimmermann, Josef, to Hoechst Aktiengesellschaft. Vaccination gun. 4,301,795, Cl. 128-207.250.
Zimmermann, Manfred: *See—*
Dannenberg, Wolfgang; Heyer, Walter; Doldissen, Theo; and Zimmermann, Manfred, 4,302,614, Cl. 568-641.000.
Zitz, Alfred: *See—*
Althaler, Wilhelm; and Zitz, Alfred, 4,302,133, Cl. 405-290.000.
Zoecon Corporation: *See—*
Labovitz, Jeffrey N., 4,302,402, Cl. 260-465.00E.
Zolton, Raymond P.: *See—*
Autenrieth, Stephen M.; and Zolton, Raymond P., 4,302,538, Cl. 435-13.000.
Zuckerman, Bernard: *See—*
Baker, T. Nelson, III; and Zuckerman, Bernard, 4,302,525, Cl. 430-217.000.

LIST OF REISSUE PATENTEES

TO WHOM

PATENTS WERE ISSUED ON THE 24TH DAY OF NOVEMBER, 1981

NOTE.—Arranged in accordance with the first significant character or word of the name (in accordance with city and telephone directory practice).

Bell & Howell Company: *See—*
Sample, Winfield; and Cheney, Robert L., Re. 30,806, Cl. 324-97.000.
Cheney, Robert L.: *See—*
Sample, Winfield; and Cheney, Robert L., Re. 30,806, Cl. 324-97.000.
Combustion Engineering, Inc.: *See—*
Rogers, George D., Jr., Re. 30,802, Cl. 29-421.00R.
Davis, Chester, to Scott Paper Company. Colorless recording paper. Re. 30,803, Cl. 282-27.500.
Gley, Paul R., to Rexnord Inc. Detachable quarter-turn blind hole fastener. Re. 30,801, Cl. 24-221.00K.
Goodell, John B.: *See—*
Lindemann, Harley B.; and Goodell, John B., Re. 30,804, Cl. 350-410.000.
Lindemann, Harley B.; and Goodell, John B. Optical air lens system. Re. 30,804, Cl. 350-410.000.
Owens-Illinois, Inc.: *See—*
Rhoads, Roger R., Re. 30,805, Cl. 428-35.000.
Rexnord Inc.: *See—*
Gley, Paul R., Re. 30,801, Cl. 24-221.00K.
Rhoads, Roger R., to Owens-Illinois, Inc. Container with improved heat shrunk cellular sleeve. Re. 30,805, Cl. 428-35.000.
Rogers, George D., Jr., to Combustion Engineering, Inc. Method of securing a sleeve within a tube. Re. 30,802, Cl. 29-421.00R.
Sample, Winfield; and Cheney, Robert L., to Bell & Howell Company. Light deflection apparatus. Re. 30,806, Cl. 324-97.000.
Scott Paper Company: *See—*
Davis, Chester, Re. 30,803, Cl. 282-27.500.

LIST OF DESIGN PATENTEES

Abramo, Ralph J., to Sunbeam Plastics Corporation. Bottle. 261,986, 11-24-81, Cl. D9-403.000.
Aelco Corporation: *See—*
Schroeder, William, 261,991, Cl. D9-436.000.
Agnew, Thomas I.: *See—*
Sistek, Robert C.; Kuhn, Richard J.; and Agnew, Thomas I., 262,021, Cl. D14-53.000.
Akita, Tsugio, to Matsushita Electric Industrial Co., Ltd. Facial bubble bath. 262,052, 11-24-81, Cl. D23-48.000.
Aldrich, Thomas B., III: *See—*
Torongo, Albert H.; and Aldrich, Thomas B., III, 261,972, Cl. D7-100.000.
Alexandris, Thomas J.; Williams, D. Michael; and Johnson, Phillip, to Johnson & Johnson. Display device. 261,970, 11-24-81, Cl. D6-235.000.
American Standard Inc.: *See—*
Bittner, Donald L., 262,059, Cl. D25-74.000.
Antos, John M.; Henke, Arthur W.; and Lindsay, Erin J., to Thetford Corporation. Portable toilet. 262,050, 11-24-81, Cl. D23-48.000.
Antos, John M.: *See—*
Sargent, Charles L.; Hoffman, John A.; and Antos, John M., 262,051, Cl. D23-48.000.
Arai, Toshimitsu, to Toyo Sangyo Kabushiki Kaisha. Glass cutter. 261,982, 11-24-81, Cl. D8-98.000.
Araujo, Armando A., Jr.: *See—*
Osrow, Harold; Le Baigue, Jacques L.; and Araujo, Armando A., Jr., 262,029, Cl. D32-23.000.
Armstrong, John C.: *See—*
Palson, Richard C. J.; and Armstrong, John C., 262,054, Cl. D23-150.000.
Aronowitz, Robert J.; and Katzanek, Bernard D., to Robert Bernard Associates. Chair. 261,953, 11-24-81, Cl. D6-47.000.
Aronowitz, Robert J.; and Katzanek, Bernard D., to Robert Bernard Associates. Chair. 261,954, 11-24-81, Cl. D6-47.000.
Aronowitz, Robert J.; and Katzanek, Bernard D., to Robert Bernard Associates. Chair. 261,955, 11-24-81, Cl. D6-47.000.
Bangor Plastics, Inc.: *See—*
Wokeck, Glenn F., 261,971, Cl. D7-94.000.
Bartholomew, Alan E.: *See—*
Smith, Lloyd T.; Bartholomew, Alan E.; Fee, Robert W.; Meister, Michael L.; Robbins, Richard J.; and Ten Eyck, Richard E., 261,978, Cl. D8-82.000.
Smith, Lloyd T.; Bartholomew, Alan E.; Fee, Robert W.; Meister, Michael L.; Robbins, Richard J.; and Ten Eyck, Richard E., 261,979, Cl. D8-82.000.
Barton, William F., to Martronics Corp. Levelling device. 261,996, 11-24-81, Cl. D10-69.000.
Battista, Orlando A. Combined dental pick, dental floss holder and dental aid container. 262,066, 11-24-81, Cl. D28-64.000.
Baxter Travenol Laboratories, Inc.: *See—*
Fowles, Thomas A.; and Winchell, David A., 261,985, Cl. D9-390.000.
Bednar, Charles, to Viking Boat Company, Inc. Combined upper hull and interior for a boat. 262,009, 11-24-81, Cl. D12-300.000.
Beisang, Arthur A.: *See—*
Holman, Daniel G.; Ersek, Robert A.; and Beisang, Arthur A., 262,065, Cl. D28-61.000.
Bennington Company, The: *See—*
Handel, David M., 261,962, Cl. D6-154.000.
Bezprozvanny, Grigory K.: *See—*
Chepil, Iraida N.; Levin, Lev B.; Bezprozvanny, Grigory K.; and Shturman, Yakov P., 262,038, Cl. D18-25.000.
Chepil, Iraida N.; Levin, Lev B.; Bezprozvanny, Grigory K.; and Shturman, Yakov P., 262,039, Cl. D18-25.000.
Bittner, Donald L., to American Standard Inc. Metal molding for door jamb or similar article. 262,059, 11-24-81, Cl. D25-74.000.
Blocksom, Dutro, Jr.: *See—*
Tuthill, Lyle B.; and Blocksom, Dutro, Jr., 261,992, Cl. D9-449.000.
Boldt, Melvin H., to Rowe International, Inc. Phonograph. 262,018, 11-24-81, Cl. D14-15.000.
Brand Insulations, Inc.: *See—*
Wilson, Richard S., 262,068, Cl. D29-1.000.
Braun Aktiengesellschaft: *See—*
Lubs, Dietrich, 261,993, Cl. D10-23.000.
Bridgestone Tire Co., Ltd.: *See—*
Kojima, Hiroshi; Sakamoto, Takao; and Shimada, Tatsuro, 262,011, Cl. D12-146.000.
Brown, Marilyn E. Desk telephone. 262,020, 11-24-81, Cl. D14-53.000.
Bryant, William L.: *See—*
Smith, Richard E.; and Bryant, William L., 262,008, Cl. D34-33.000.
Caldwell, John W. Side frame for a chair. 261,968, 11-24-81, Cl. D6-192.000.
Candiliotis, Gerassimos C., to Uniroyal, Inc. Pneumatic tire tread and buttress. 262,012, 11-24-81, Cl. D12-147.000.
Carbajales Santa-Eulalia, Javier B.: *See—*
Carbajales Santa-Eulalia, Jesus A.; and Carbajales Santa-Eulalia, Javier B., 262,001, Cl. D11-158.000.
Carbajales Santa-Eulalia, Jesus A.; and Carbajales Santa-Eulalia, Javier B., 262,002, Cl. D11-158.000.
Carbajales Santa-Eulalia, Jesus A.; and Carbajales Santa-Eulalia, Javier B., 262,003, Cl. D11-158.000.
Carbajales Santa-Eulalia, Jesus A.; and Carbajales Santa-Eulalia, Javier B., 262,004, Cl. D11-158.000.
Carbajales Santa-Eulalia, Jesus A.; and Carbajales Santa-Eulalia, Javier B., 262,005, Cl. D11-158.000.
Carbajales Santa-Eulalia, Jesus A.; and Carbajales Santa-Eulalia, Javier B., 262,006, Cl. D11-158.000.
Carbajales Santa-Eulalia, Jesus A.; and Carbajales Santa-Eulalia, Javier B., 262,007, Cl. D11-162.000.
Carbajales Santa-Eulalia, Jesus A.; and Carbajales Santa-Eulalia, Javier B., to John J. Madison Co. Inc. Figurine of a cougar. 262,001, 11-24-81, Cl. D11-158.000.
Carbajales Santa-Eulalia, Jesus A.; and Carbajales Santa-Eulalia, Javier B., to John J. Madison Co. Inc. Figurine of a German shepherd. 262,002, 11-24-81, Cl. D11-158.000.
Carbajales Santa-Eulalia, Jesus A.; and Carbajales Santa-Eulalia, Javier B., to John J. Madison Co. Inc. Figurine of a Scottish pup. 262,003, 11-24-81, Cl. D11-158.000.

Carbajales Santa-Eulalia, Jesus A.; and Carbajales Santa-Eulalia, Javier B., to John J. Madison Co. Inc. Figurine of a dachshund pup. 262,004, 11-24-81, Cl. D11-158.000.
Carbajales Santa-Eulalia, Jesus A.; and Carbajales Santa-Eulalia, Javier B., to John J. Madison Co. Inc. Figurine of a coyote. 262,005, 11-24-81, Cl. D11-158.000.
Carbajales Santa-Eulalia, Jesus A.; and Carbajales Santa-Eulalia, Javier B., to John J. Madison Co. Inc. Figurine of a boxer. 262,006, 11-24-81, Cl. D11-158.000.
Carbajales Santa-Eulalia, Jesus A.; and Carbajales Santa-Eulalia, Javier B., to John J. Madison Co. Inc. Figurine of a duck. 262,007, 11-24-81, Cl. D11-162.000.
Carey, Michael J. Cleated boot attachment. 261,945, 11-24-81, Cl. D2-317.000.
Champion International Corporation: *See—*
  Faller, Rudolph A., 261,989, Cl. D9-433.000.
  Roccaforte, Harry I., 261,990, Cl. D9-433.000.
Chepil, Iraida N.; Levin, Lev B.; Bezprozvanny, Grigory K.; and Shturman, Yakov P. Typeface for photocomposition. 262,038, 11-24-81, Cl. D18-25.000.
Chepil, Iraida N.; Levin, Lev B.; Bezprozvanny, Grigory K.; and Shturman, Yakov P. Typeface for photocomposition. 262,039, 11-24-81, Cl. D18-25.000.
Chicago Show Printing Company: *See—*
  Drapeau, Robert, 261,967, Cl. D6-172.000.
Clairol Incorporated: *See—*
  Springer, William E., 262,063, Cl. D28-40.000.
Combi Co., Ltd.: *See—*
  Nakao, Shinroku; Ishii, Yoshiyasu; and Ishii, Kenshun, 262,045, Cl. D21-108.000.
Conti, Rino, to Dart Industries Inc. Handle or the like. 261,976, 11-24-81, Cl. D7-132.000.
Curwood Inc.: *See—*
  Nichols, William R.; Robison, L. D.; and Swalby, Samuel C., 261,988, Cl. D9-415.000.
Daimler-Benz Aktiengesellschaft: *See—*
  Muller, Alf; Renz, Dieter; Loper, Bernd; Langenbeck, Andreas; and Heiliger, Stefan, 262,015, Cl. D12-204.000.
Dart Industries Inc.: *See—*
  Conti, Rino, 261,976, Cl. D7-132.000.
Davis, Roy P., to Goodyear Tire & Rubber Company, The. Tire. 262,013, 11-24-81, Cl. D12-147.000.
Display Corporation International: *See—*
  Rex, Roger, 261,966, Cl. D6-167.000.
Dowse, Bruce, to Dowse Designs Pty. Limited. Chair. 261,958, 11-24-81, Cl. D6-73.000.
Dowse Designs Pty. Limited: *See—*
  Dowse, Bruce, 261,958, Cl. D6-73.000.
Drapeau, Robert, to Chicago Show Printing Company. Display cabinet. 261,967, 11-24-81, Cl. D6-172.000.
Ekelund, Bo, to International Standard Electric Corporation. Adjustable chair. 261,951, 11-24-81, Cl. D6-22.000.
Ersek, Robert A.: *See—*
  Holman, Daniel G.; Ersek, Robert A.; and Beisang, Arthur A., 262,065, Cl. D28-61.000.
Erskine, Jimmy H.: *See—*
  Martin, Hal E.; and Erskine, Jimmy H., 261,977, Cl. D7-212.000.
Faller, Rudolph A., to Champion International Corporation. Blank for a two compartment box. 261,989, 11-24-81, Cl. D9-433.000.
Fee, Robert W.; Ten Eyck, Richard E.; and Smith, Lloyd T., to S/V Tool Company, Inc. Driver for fasteners. 261,980, 11-24-81, Cl. D8-82.000.
Fee, Robert W.; Ten Eyck, Richard E.; and Smith, Lloyd T., to S/V Tool Company, Inc. Fastener rotating tool. 261,981, 11-24-81, Cl. D8-82.000.
Fee, Robert W.: *See—*
  Smith, Lloyd T.; Bartholomew, Alan E.; Fee, Robert W.; Meister, Michael L.; Robbins, Richard J.; and Ten Eyck, Richard E., 261,978, Cl. D8-82.000.
  Smith, Lloyd T.; Bartholomew, Alan E.; Fee, Robert W.; Meister, Michael L.; Robbins, Richard J.; and Ten Eyck, Richard E., 261,979, Cl. D8-82.000.
Fiodeisen, John L. Golf club carrier. 261,949, 11-24-81, Cl. D3-37.000.
Flood, Winston. Motor cycle seat. 261,956, 11-24-81, Cl. D6-48.100.
Fowles, Thomas A.; and Winchell, David A., to Baxter Travenol Laboratories, Inc. Bottle. 261,985, 11-24-81, Cl. D9-390.000.
Fox, Anthony. Multi-purpose power tool. 262,031, 11-24-81, Cl. D15-122.000.
Foy, Richard A., to Paramount Pictures Corporation. Calligraphic font. 262,037, 11-24-81, Cl. D18-24.000.
Frakes, James H., Jr., to General Electric Company. Combined cassette player and recorder and radio or similar article. 262,017, 11-24-81, Cl. D14-5.000.
Francis, Frederick. Telephone-mountable holder with clip to retain writing instrument. 262,027, 11-24-81, Cl. D14-66.000.
Fukushima, Akio, to Ohjuma Seisakusho Co., Ltd. Target game with scoreboard housing. 262,043, 11-24-81, Cl. D21-13.000.
Gall, Henry M. Mobile. 262,000, 11-24-81, Cl. D11-141.000.
Gambro Dialysatoren GmbH & Co. KG: *See—*
  Rosemeier, Friedrich; and Killmaier, Horst, 262,056, Cl. D24-58.000.
Garan, Michael J. Mirror attachment for telephone. 262,026, 11-24-81, Cl. D14-59.000.
Gavino, Elmer L. Charcoal starter. 262,053, 11-24-81, Cl. D23-90.100.
General Electric Company: *See—*
  Frakes, James H., Jr., 262,017, Cl. D14-5.000.
Genesco, Inc.: *See—*
  Trask, Harrison S., 261,946, Cl. D2-322.000.
Gitkin, Merrill J., to Jencraft Corporation. Combined cafe curtain and valance. 261,969, 11-24-81, Cl. D6-205.000.
Goldammer, Arthur R. Multiple cassette cartridge holder. 261,961, 11-24-81, Cl. D6-130.000.
Goodyear Tire & Rubber Company, The: *See—*
  Davis, Roy P., 262,013, Cl. D12-147.000.
Graybeal, Andrew W.; Hiller, Steve S.; and Hisata, Thomas T., to Hiller Enterprises. Building with rearward facing solar panel. 262,058, 11-24-81, Cl. D25-30.000.
Grover, Marcia C. Magnetic hand tool for handling metallic canning lids, rings and the like. 261,973, 11-24-81, Cl. D7-102.000.
Gunnells, Marcul L. Paint can support for a ladder. 261,984, 11-24-81, Cl. D8-367.000.
Handel, David M., to Bennington Company, The. Triple dresser or similar article. 261,962, 11-24-81, Cl. D6-154.000.
Hayashi, Shigeaki: *See—*
  Yamagami, Masafumi; Hayashi, Shigeaki; and Tatsugami, Harumi, 261,994, Cl. D10-30.000.
Heiliger, Stefan: *See—*
  Muller, Alf; Renz, Dieter; Loper, Bernd; Langenbeck, Andreas; and Heiliger, Stefan, 262,015, Cl. D12-204.000.
Henke, Arthur W.: *See—*
  Antos, John M.; Henke, Arthur W.; and Lindsay, Erin J., 262,050, Cl. D23-48.000.
Hiller Enterprises: *See—*
  Graybeal, Andrew W.; Hiller, Steve S.; and Hisata, Thomas T., 262,058, Cl. D25-30.000.
Hiller, Steve S.: *See—*
  Graybeal, Andrew W.; Hiller, Steve S.; and Hisata, Thomas T., 262,058, Cl. D25-30.000.
Hine, Harrison W. Handle for sailboat hiking stick. 262,016, 11-24-81, Cl. D12-317.000.
Hisata, Thomas T.: *See—*
  Graybeal, Andrew W.; Hiller, Steve S.; and Hisata, Thomas T., 262,058, Cl. D25-30.000.
Hoffman, John A.: *See—*
  Sargent, Charles L.; Hoffman, John A.; and Antos, John M., 262,051, Cl. D23-48.000.
Holman, Daniel G.; Ersek, Robert A.; and Beisang, Arthur A. Hand pan. 262,065, 11-24-81, Cl. D28-61.000.
ICL/Scientific: *See—*
  Parker, James E., 262,057, Cl. D24-99.000.
International Standard Electric Corporation: *See—*
  Ekelund, Bo, 261,951, Cl. D6-22.000.
Ishii, Kenshun: *See—*
  Nakao, Shinroku; Ishii, Yoshiyasu; and Ishii, Kenshun, 262,045, Cl. D21-108.000.
Ishii, Yoshiyasu: *See—*
  Nakao, Shinroku; Ishii, Yoshiyasu; and Ishii, Kenshun, 262,045, Cl. D21-108.000.
Jankowski, Michael T., to U.S. Philips Corporation. Case for a dry shaver. 261,950, 11-24-81, Cl. D3-39.000.
Janssens, Wilhelmus G. E., to U.S. Philips Corporation. Hair dryer. 262,061, 11-24-81, Cl. D28-13.000.
Jencraft Corporation: *See—*
  Gitkin, Merrill J., 261,969, Cl. D6-205.000.
John J. Madison Co. Inc.: *See—*
  Carbajales Santa-Eulalia, Jesus A.; and Carbajales Santa-Eulalia, Javier B., 262,001, Cl. D11-158.000.
  Carbajales Santa-Eulalia, Jesus A.; and Carbajales Santa-Eulalia, Javier B., 262,002, Cl. D11-158.000.
  Carbajales Santa-Eulalia, Jesus A.; and Carbajales Santa-Eulalia, Javier B., 262,003, Cl. D11-158.000.
  Carbajales Santa-Eulalia, Jesus A.; and Carbajales Santa-Eulalia, Javier B., 262,004, Cl. D11-158.000.
  Carbajales Santa-Eulalia, Jesus A.; and Carbajales Santa-Eulalia, Javier B., 262,005, Cl. D11-158.000.
  Carbajales Santa-Eulalia, Jesus A.; and Carbajales Santa-Eulalia, Javier B., 262,006, Cl. D11-158.000.
  Carbajales Santa-Eulalia, Jesus A.; and Carbajales Santa-Eulalia, Javier B., 262,007, Cl. D11-162.000.
Johnson & Johnson: *See—*
  Alexandris, Thomas J.; Williams, D. Michael; and Johnson, Phillip, 261,970, Cl. D6-235.000.
Johnson, Phillip: *See—*
  Alexandris, Thomas J.; Williams, D. Michael; and Johnson, Phillip, 261,970, Cl. D6-235.000.
Johnson, William M., to Ralph McKay Limited. Agricultural tine. 262,028, 11-24-81, Cl. D15-29.000.
Kato, Yuji, to Tomy Kogyo Co., Inc. Toy trackway having moving animated components. 262,048, 11-24-81, Cl. D21-143.000.
Katzanek, Bernard D.: *See—*
  Aronowitz, Robert J.; and Katzanek, Bernard D., 261,953, Cl. D6-47.000.
  Aronowitz, Robert J.; and Katzanek, Bernard D., 261,954, Cl. D6-47.000.
  Aronowitz, Robert J.; and Katzanek, Bernard D., 261,955, Cl. D6-47.000.
Khider, George. Animal dish. 262,069, 11-24-81, Cl. D30-16.000.

Killmaier, Horst: *See—*
  Rosemeier, Friedrich; and Killmaier, Horst, 262,056, Cl. D24-58.000.
Kojima, Hiroshi; Sakamoto, Takao; and Shimada, Tatsuro, to Bridgestone Tire Co., Ltd. Vehicle tire. 262,011, 11-24-81, Cl. D12-146.000.
Kolodge, David J. Drawing guide. 261,995, 11-24-81, Cl. D10-62.000.
Kuhn, Richard J.: *See—*
  Sistek, Robert C.; Kuhn, Richard J.; and Agnew, Thomas I., 262,021, Cl. D14-53.000.
LaBarbera, Angelo M., to SCM Corporation. Typewriter. 262,036, 11-24-81, Cl. D18-1.000.
Lahtinen, Paavo. Slot machine. 262,042, 11-24-81, Cl. D21-12.000.
Langenbeck, Andreas: *See—*
  Muller, Alf; Renz, Dieter; Loper, Bernd; Langenbeck, Andreas; and Heiliger, Stefan, 262,015, Cl. D12-204.000.
Le Baigue, Jacques L.: *See—*
  Osrow, Harold; Le Baigue, Jacques L.; and Araujo, Armando A., Jr., 262,029, Cl. D32-23.000.
Levin, Lev B.: *See—*
  Chepil, Iraida N.; Levin, Lev B.; Bezprozvanny, Grigory K.; and Shturman, Yakov P., 262,038, Cl. D18-25.000.
  Chepil, Iraida N.; Levin, Lev B.; Bezprozvanny, Grigory K., and Shturman, Yakov P., 262,039, Cl. D18-25.000.
Lewis, J. Stephen; Rosenthal, Janice E.; Sargent, Virginia R.; and Villanueva, Juanito O., to Mattel, Inc. Simulative toy house. 262,047, 11-24-81, Cl. D21-115.000.
Lindsay, Erin J.: *See—*
  Antos, John M.; Henke, Arthur W.; and Lindsay, Erin J., 262,050, Cl. D23-48.000.
Loper, Bernd: *See—*
  Muller, Alf; Renz, Dieter; Loper, Bernd; Langenbeck, Andreas; and Heiliger, Stefan, 262,015, Cl. D12-204.000.
Lubke GmbH & Co. KG.: *See—*
  Lubke, Karl, 261,957, Cl. D6-73.000.
Lubke, Karl, to Lubke GmbH & Co. KG. Armchair. 261,957, 11-24-81, Cl. D6-73.000.
Lubs, Dietrich, to Braun Aktiengesellschaft. Clock. 261,993, 11-24-81, Cl. D10-23.000.
Luikart, Ralph, II. Surgical instrument. 262,055, 11-24-81, Cl. D24-27.000.
Magic Chef, Inc.: *See—*
  Tunzi, Joseph P., 261,983, Cl. D8-314.000.
Martin, Hal E.; and Erskine, Jimmy H. Organizer rack for storage of firewood, kindling, newspaper and fireplace tools. 261,977, 11-24-81, Cl. D7-212.000.
Martronics Corp.: *See—*
  Barton, William F., 261,996, Cl. D10-69.000.
Marvin Glass & Associates: *See—*
  Montague, Douglas P., 262,044, Cl. D21-13.000.
Mathews, Lyle H. Rack for utility, telephone and power cables or the like. 261,960, 11-24-81, Cl. D6-114.000.
Matsushita Electric Industrial Co., Ltd.: *See—*
  Akita, Tsugio, 262,052, Cl. D23-48.000.
Mattel, Inc.: *See—*
  Lewis, J. Stephen; Rosenthal, Janice E.; Sargent, Virginia R.; and Villanueva, Juanito O., 262,047, Cl. D21-115.000.
McConville, Mark S. Container for liquids. 261,948, 11-24-81, Cl. D3-30.100.
Megna, Salvator J. Brush organizer with brushes and detachable handle. 262,067, 11-24-81, Cl. D28-74.000.
Meister, Michael L.: *See—*
  Smith, Lloyd T.; Bartholomew, Alan E.; Fee, Robert W.; Meister, Michael L.; Robbins, Richard J.; and Ten Eyck, Richard E., 261,978, Cl. D8-82.000.
  Smith, Lloyd T.; Bartholomew, Alan E.; Fee, Robert W.; Meister, Michael L.; Robbins, Richard J.; and Ten Eyck, Richard E., 261,979, Cl. D8-82.000.
Miller, Griffith C. Audio-visual carrel. 261,963, 11-24-81, Cl. D6-157.000.
Miyakawa, Eiji, to Miyakawa Industry Company, Limited. Spindlecase attachment for tapping machines to change the rotation of the tool. 262,034, 11-24-81, Cl. D15-140.000.
Miyakawa Industry Company, Limited: *See—*
  Miyakawa, Eiji, 262,034, Cl. D15-140.000.
Montague, Douglas P., to Marvin Glass & Associates. Electronic game housing. 262,044, 11-24-81, Cl. D21-13.000.
Moore, Merton E., to Textron Inc. Pull tab for a slide fastener. 261,947, 11-24-81, Cl. D2-415.000.
Muller, Alf; Renz, Dieter; Loper, Bernd; Langenbeck, Andreas; and Heiliger, Stefan, to Daimler-Benz Aktiengesellschaft. Wheel covering. 262,015, 11-24-81, Cl. D12-204.000.
Munz, Robert E., to Sunbeam Corporation. Combined water sensor and alarm apparatus. 261,998, 11-24-81, Cl. D10-106.000.
Nagelkerke, Petrus J. J., to U.S. Philips Corporation. Hair dryer. 262,060, 11-24-81, Cl. D28-13.000.
Nagelkerke, Petrus J. J., to U.S. Philips Corporation. Hair dryer. 262,062, 11-24-81, Cl. D28-13.000.
Nakao, Shinroku; Ishii, Yoshiyasu; and Ishii, Kenshun, to Combi Co., Ltd. Block toy. 262,045, 11-24-81, Cl. D21-108.000.
Naor, Eric. Desk or similar article. 261,965, 11-24-81, Cl. D6-161.000.
Nichols, William R.; Robison, L. D.; and Swalby, Samuel C., to Curwood Inc. Packaging container. 261,988, 11-24-81, Cl. D9-415.000.
Ohjuma Seisakusho Co., Ltd.: *See—*
  Fukushima, Akio, 262,043, Cl. D21-13.000.
Osrow, Harold; Le Baigue, Jacques L.; and Araujo, Armando A., Jr., to Osrow Products Corp. Automobile vacuum cleaner. 262,029, 11-24-81, Cl. D32-23.000.
Osrow Products Corp.: *See—*
  Osrow, Harold; Le Baigue, Jacques L.; and Araujo, Armando A., Jr., 262,029, Cl. D32-23.000.
Palson, Richard C. J.; and Armstrong, John C., to Pharmasol Corporation, The. Dispenser for room deodorant. 262,054, 11-24-81, Cl. D23-150.000.
Paramount Pictures Corporation: *See—*
  Foy, Richard A., 262,037, Cl. D18-24.000.
Pardo, John, to Procter & Gamble Company, The. Bottle. 261,987, 11-24-81, Cl. D9-413.000.
Parker, James E., to ICL/Scientific. Transparent laboratory slide. 262,057, 11-24-81, Cl. D24-99.000.
Pharmasol Corporation, The: *See—*
  Palson, Richard C. J.; and Armstrong, John C., 262,054, Cl. D23-150.000.
Pickman, E. Steven. Oyster knife or similar article. 261,974, 11-24-81, Cl. D7-106.000.
Pittway Corporation: *See—*
  Westphal, Donald J., 261,997, Cl. D10-106.000.
Procter & Gamble Company, The: *See—*
  Pardo, John, 261,987, Cl. D9-413.000.
  Torongo, Albert H.; and Aldrich, Thomas B., III, 261,972, Cl. D7-100.000.
  Tuthill, Lyle B.; and Blocksom, Dutro, Jr., 261,992, Cl. D9-449.000.
Rainin, Edgar A. Tweezer or similar article. 262,064, 11-24-81, Cl. D28-55.000.
Ralph McKay Limited: *See—*
  Johnson, William M., 262,028, Cl. D15-29.000.
Reece, Alton D. Dispensing cabinet. 262,030, 11-24-81, Cl. D15-111.000.
Renz, Dieter: *See—*
  Muller, Alf; Renz, Dieter; Loper, Bernd; Langenbeck, Andreas; and Heiliger, Stefan, 262,015, Cl. D12-204.000.
Retallick, Gary W. Vehicle mounted accommodation module. 262,014, 11-24-81, Cl. D12-156.000.
Rex, Roger, to Display Corporation International. Cabinet for a video system. 261,966, 11-24-81, Cl. D6-167.000.
Robbins, Richard J.: *See—*
  Smith, Lloyd T.; Bartholomew, Alan E.; Fee, Robert W.; Meister, Michael L.; Robbins, Richard J.; and Ten Eyck, Richard E., 261,978, Cl. D8-82.000.
  Smith, Lloyd T.; Bartholomew, Alan E.; Fee, Robert W.; Meister, Michael L.; Robbins, Richard J.; and Ten Eyck, Richard E., 261,979, Cl. D8-82.000.
Robert Bernard Associates: *See—*
  Aronowitz, Robert J.; and Katzanek, Bernard D., 261,953, Cl. D6-47.000.
  Aronowitz, Robert J.; and Katzanek, Bernard D., 261,954, Cl. D6-47.000.
  Aronowitz, Robert J.; and Katzanek, Bernard D., 261,955, Cl. D6-47.000.
Robison, L. D.: *See—*
  Nichols, William R.; Robison, L. D.; and Swalby, Samuel C., 261,988, Cl. D9-415.000.
Roccaforte, Harry I., to Champion International Corporation. Carton blank. 261,990, 11-24-81, Cl. D9-433.000.
Rosemeier, Friedrich; and Killmaier, Horst, to Gambro Dialysatoren GmbH & Co. KG. Liquid storage device. 262,056, 11-24-81, Cl. D24-58.000.
Rosenthal, Janice E.: *See—*
  Lewis, J. Stephen; Rosenthal, Janice E.; Sargent, Virginia R.; and Villanueva, Juanito O., 262,047, Cl. D21-115.000.
Rowe International, Inc.: *See—*
  Boldt, Melvin H., 262,018, Cl. D14-15.000.
S/V Tool Company, Inc.: *See—*
  Fee, Robert W.; Ten Eyck, Richard E.; and Smith, Lloyd T., 261,980, Cl. D8-82.000.
  Fee, Robert W.; Ten Eyck, Richard E.; and Smith, Lloyd T., 261,981, Cl. D8-82.000.
  Smith, Lloyd T.; Bartholomew, Alan E.; Fee, Robert W.; Meister, Michael L.; Robbins, Richard J.; and Ten Eyck, Richard E., 261,978, Cl. D8-82.000.
  Smith, Lloyd T.; Bartholomew, Alan E.; Fee, Robert W.; Meister, Michael L.; Robbins, Richard J.; and Ten Eyck, Richard E., 261,979, Cl. D8-82.000.
Sakamoto, Takao: *See—*
  Kojima, Hiroshi; Sakamoto, Takao; and Shimada, Tatsuro, 262,011, Cl. D12-146.000.
Sargent, Charles L.; Hoffman, John A.; and Antos, John M., to Thetford Corporation. Portable toilet. 262,051, 11-24-81, Cl. D23-48.000.
Sargent, Virginia R.: *See—*
  Lewis, J. Stephen; Rosenthal, Janice E.; Sargent, Virginia R.; and Villanueva, Juanito O., 262,047, Cl. D21-115.000.
Sauls, Thomas P. Smoker. 261,975, 11-24-81, Cl. D7-107.000.
Schmidt, Gunther. Desk set. 262,041, 11-24-81, Cl. D19-75.000.
Schroeder, William, to Aelco Corporation. Combined cap holder and cap. 261,991, 11-24-81, Cl. D9-436.000.
SCM Corporation: *See—*
  LaBarbera, Angelo M., 262,036, Cl. D18-1.000.

Shames, Harold: *See*—
Shames, Sidney J.; and Shames, Harold, 261,959, Cl. D6-86.000.
Shames, Sidney J.; and Shames, Harold. Wall mounted horizontal support frame. 261,959, 11-24-81, Cl. D6-86.000.
Sharp Corporation: *See*—
Yamagami, Masafumi; Hayashi, Shigeaki; and Tatsugami, Harumi, 261,994, Cl. D10-30.000.
Shimada, Tatsuro: *See*—
Kojima, Hiroshi; Sakamoto, Takao; and Shimada, Tatsuro, 262,011, Cl. D12-146.000.
Shiraishi, Masami, to Tomy Kogyo Co., Inc. Toy camera. 262,046, 11-24-81, Cl. D21-110.000.
Shturman, Yakov P.: *See*—
Chepil, Iraida N.; Levin, Lev B.; Bezprozvanny, Grigory K.; and Shturman, Yakov P., 262,038, Cl. D18-25.000.
Chepil, Iraida N.; Levin, Lev B.; Bezprozvanny, Grigory K.; and Shturman, Yakov P., 262,039, Cl. D18-25.000.
Simmons, Samuel P. Golf club head. 262,049, 11-24-81, Cl. D21-214.000.
Sistek, Robert C.; Kuhn, Richard J.; and Agnew, Thomas I. Visual receiver. 262,021, 11-24-81, Cl. D14-53.000.
Smith, Lloyd T.; Bartholomew, Alan E.; Fee, Robert W.; Meister, Michael L.; Robbins, Richard J.; and Ten Eyck, Richard E., to S/V Tool Company, Inc. Hand tool. 261,978, 11-24-81, Cl. D8-82.000.
Smith, Lloyd T.; Bartholomew, Alan E.; Fee, Robert W.; Meister, Michael L.; Robbins, Richard J.; and Ten Eyck, Richard E., to S/V Tool Company, Inc. Tool for turning screws and the like. 261,979, 11-24-81, Cl. D8-82.000.
Smith, Lloyd T.: *See*—
Fee, Robert W.; Ten Eyck, Richard E.; and Smith, Lloyd T., 261,980, Cl. D8-82.000.
Fee, Robert W.; Ten Eyck, Richard E.; and Smith, Lloyd T., 261,981, Cl. D8-82.000.
Smith, Richard E.; and Bryant, William L. Winch assembly. 262,008, 11-24-81, Cl. D34-33.000.
Snider, Juanita J. Jewelry, charm or similar article. 261,999, 11-24-81, Cl. D11-61.000.
Springer, William E., to Clairol Incorporated. Hair roller clip. 262,063, 11-24-81, Cl. D28-40.000.
Stewart, Raymond C. Modular cabinet. 261,964, 11-24-81, Cl. D6-158.000.
Sunbeam Corporation: *See*—
Munz, Robert E., 261,998, Cl. D10-106.000.
Sunbeam Plastics Corporation: *See*—
Abramo, Ralph J., 261,986, Cl. D9-403.000.
Swalby, Samuel C.: *See*—
Nichols, William R.; Robison, L. D.; and Swalby, Samuel C., 261,988, Cl. D9-415.000.
Tatsugami, Harumi: *See*—
Yamagami, Masafumi; Hayashi, Shigeaki; and Tatsugami, Harumi, 261,994, Cl. D10-30.000.
Ten Eyck, Richard E.: *See*—
Fee, Robert W.; Ten Eyck, Richard E.; and Smith, Lloyd T., 261,980, Cl. D8-82.000.
Fee, Robert W.; Ten Eyck, Richard E.; and Smith, Lloyd T., 261,981, Cl. D8-82.000.
Smith, Lloyd T.; Bartholomew, Alan E.; Fee, Robert W.; Meister, Michael L.; Robbins, Richard J.; and Ten Eyck, Richard E., 261,978, Cl. D8-82.000.
Smith, Lloyd T.; Bartholomew, Alan E.; Fee, Robert W.; Meister, Michael L.; Robbins, Richard J.; and Ten Eyck, Richard E., 261,979, Cl. D8-82.000.
Textron Inc.: *See*—
Moore, Merton E., 261,947, Cl. D2-415.000.
Thetford Corporation: *See*—
Antos, John M.; Henke, Arthur W.; and Lindsay, Erin J., 262,050, Cl. D23-48.000.
Sargent, Charles L.; Hoffman, John A.; and Antos, John M., 262,051, Cl. D23-48.000.
Thomas, Allan R. Belt winch and attachment device. 262,010, 11-24-81, Cl. D34-33.000.
Thomas, Wesley L. Novelty telephone. 262,022, 11-24-81, Cl. D14-53.000.
Thomas, Wesley L. Novelty telephone. 262,023, 11-24-81, Cl. D14-53.000.
Thomas, Wesley L. Novelty telephone. 262,024, 11-24-81, Cl. D14-53.000.
Thomas, Wesley L. Novelty telephone. 262,025, 11-24-81, Cl. D14-53.000.
Tomy Kogyo Co., Inc.: *See*—
Kato, Yuji, 262,048, Cl. D21-143.000.
Shiraishi, Masami, 262,046, Cl. D21-110.000.
Torongo, Albert H.; and Aldrich, Thomas B., III, to Procter & Gamble Company, The. Scoop. 261,972, 11-24-81, Cl. D7-100.000.
Totsu, Katsuyuki. Outer casing for planetary gear assembly. 262,032, 11-24-81, Cl. D15-138.000.
Totsu, Katsuyuki. Ring gear for planetary gear assembly. 262,033, 11-24-81, Cl. D15-138.000.
Toyo Sangyo Kabushiki Kaisha: *See*—
Arai, Toshimitsu, 261,982, Cl. D8-98.000.
Trask, Harrison S., to Genesco, Inc. Ladies' platform shoe sole. 261,946, 11-24-81, Cl. D2-322.000.
Tunzi, Joseph P., to Magic Chef, Inc. Handle. 261,983, 11-24-81, Cl. D8-314.000.
Tuthill, Lyle B.; and Blocksom, Dutro, Jr., to Procter & Gamble Company, The. Dispensing closure. 261,992, 11-24-81, Cl. D9-449.000.
Uniroyal, Inc.: *See*—
Candiliotis, Gerassimos C., 262,012, Cl. D12-147.000.
U.S. Philips Corporation: *See*—
Jankowski, Michael T., 261,950, Cl. D3-39.000.
Janssens, Wilhelmus G. E., 262,061, Cl. D28-13.000.
Nagelkerke, Petrus J. J., 262,060, Cl. D28-13.000.
Nagelkerke, Petrus J. J., 262,062, Cl. D28-13.000.
Upshaw, Jim L. Earphone set. 262,019, 11-24-81, Cl. D14-36.000.
Valdez, Pat R. Lounge chair. 261,952, 11-24-81, Cl. D6-37.000.
Viking Boat Company, Inc.: *See*—
Bednar, Charles, 262,009, Cl. D12-300.000.
Villanueva, Juanito O.: *See*—
Lewis, J. Stephen; Rosenthal, Janice E.; Sargent, Virginia R.; and Villanueva, Juanito O., 262,047, Cl. D21-115.000.
Westphal, Donald J., to Pittway Corporation. Housing for fire and smoke detector. 261,997, 11-24-81, Cl. D10-106.000.
Wihlke, Hans L. Leaf for a photograph album. 262,040, 11-24-81, Cl. D19-33.000.
Williams, D. Michael: *See*—
Alexandris, Thomas J.; Williams, D. Michael; and Johnson, Phillip, 261,970, Cl. D6-235.000.
Wilson, Richard S., to Brand Insulations, Inc. Fire stop. 262,068, 11-24-81, Cl. D29-1.000.
Winchell, David A.: *See*—
Fowles, Thomas A.; and Winchell, David A., 261,985, Cl. D9-390.000.
Wittman, Brian L. Wind instrument. 262,035, 11-24-81, Cl. D17-10.000.
Wokeck, Glenn F., to Bangor Plastics, Inc. Cooking dish. 261,971, 11-24-81, Cl. D7-94.000.
Yamagami, Masafumi; Hayashi, Shigeaki; and Tatsugami, Harumi, to Sharp Corporation. Digital watch. 261,994, 11-24-81, Cl. D10-30.000.

LIST OF PLANT PATENTEES

Conard-Pyle Comany, The: *See*—
Corliss, Clifford D., 4,795, Cl. 63.000.
Corliss, Clifford D., to Conard-Pyle Comany, The. Euonymus plant—Corlutz variety. 4,795, 11-24-81, Cl. 63.000.
Simmons, Dan E., to Stark Brothers Nurseries & Orchards Co. Spur type Red Rome apple tree—Peach Valley cultivar. 4,793, 11-24-81, Cl. 34.000.
Stark Brothers Nurseries & Orchards Co.: *See*—
Simmons, Dan E., 4,793, Cl. 34.000.
Verkade, Gerald H. *Pieris japonica* named Crystal. 4,794, 11-24-81, Cl. 54.000.

CLASSIFICATION OF PATENTS

ISSUED NOVEMBER 24, 1981

NOTE.—First number, class; second number, subclass; third number, patent number

CLASS 2	
49 A	4,301,544
67	4,301,545
88	4,301,547
91	4,301,548
227	4,301,546
250	4,301,549
408	4,301,550
CLASS 3	
1	4,301,551
1.91	4,301,552
1.911	4,301,553
CLASS 4	
206	4,301,554
217	4,301,555
231	4,301,556
286	4,301,557
420	4,301,558
CLASS 5	
13	4,301,559
450	4,301,560
496	4,301,561
CLASS 8	
405	4,302,199
438	4,302,200
444	4,302,201
455	4,302,202
490	4,302,203
CLASS 9	
310 D	4,301,562
CLASS 10	
10 R	4,301,563
CLASS 12	
146 R	4,301,564
CLASS 13	
6	4,302,623
CLASS 14	
1	4,301,565
CLASS 15	
53 A	4,301,566
160	4,301,567
340	4,301,568
CLASS 16	
48.5	4,301,569
85	4,301,570
CLASS 17	
51	4,301,571
CLASS 19	
97	4,301,572
200	4,301,573
288	4,301,574
CLASS 23	
230.3	4,302,204
232 R	4,302,205
	4,302,206
CLASS 24	
1	4,301,575
221 K	Re.30,801
230 AL	4,301,576
CLASS 26	
2 R	4,301,577
CLASS 28	
256	4,301,578
282	4,301,579
CLASS 29	
25.42	4,301,580
38 C	4,301,581
116 AD	4,301,582
121.2	4,301,583
156.8 B	4,301,584
157 C	4,301,585
157.1 R	4,301,586
243.5	4,301,587
276	4,301,588
283	4,301,589
421 R	Re.30,802
450	4,301,590
572	4,301,591
590	4,301,592
CLASS 30	
42	4,301,593
164.95	4,301,594
427	4,301,595
CLASS 33	
126.7 R	4,301,597
147 L	4,301,598
277	4,301,599
464	4,301,600
494	4,301,596
CLASS 34	
3	4,301,601
43	4,301,602
CLASS 36	
110	4,301,603
130	4,301,604
CLASS 37	
2 R	4,301,605
66	4,301,606
118 R	4,301,607
CLASS 40	
16.4	4,301,608
CLASS 42	
69 A	4,301,609
CLASS 43	
17.2	4,301,610
18 R	4,301,611
100	4,301,612
CLASS 44	
1 R	4,302,207
7 D	4,302,208
10 D	4,302,209
24	4,302,210
	4,302,211
51	4,302,212
56	4,302,213
	4,302,214
71	4,302,215
	4,302,216
CLASS 46	
42	4,301,613
79	4,301,614
105	4,301,615
228	4,301,616
257	4,301,617
CLASS 47	
46	4,301,618
58	4,301,619
	4,301,620
CLASS 48	
180 C	4,302,217
197 R	4,302,218
213	4,302,219
CLASS 49	
27	4,301,621
342	4,301,622
404	4,301,623
CLASS 51	
34 J	4,301,624
163.2	4,301,625
CLASS 52	
2	4,301,626
6	4,301,627
90	4,301,628
99	4,301,629
126	4,301,630
168	4,301,631
211	4,301,632
309.4	4,301,633
389	4,301,634
483	4,301,635
584	4,301,636
594	4,301,637
687	4,301,638
CLASS 53	
456	4,301,639
478	4,301,640
493	4,301,641
CLASS 55	
32	4,302,220
60	4,302,221
67	4,302,222
158	4,302,223
160	4,302,224
234	4,302,225
238	4,302,226
269	4,302,227
302	4,302,228
CLASS 56	
12.7	4,301,642
13.6	4,301,643
14.3	4,301,644
27.5	4,301,645
121.43	4,301,646
504	4,301,647
CLASS 57	
280	4,301,648
CLASS 60	
39.07	4,301,649
39.18 B	4,301,650
282	4,301,651
310	4,301,652
535	4,301,653
649	4,301,654
712	4,301,655
737	4,301,656
748	4,301,657
CLASS 62	
3	4,301,658
21	4,302,229
57	4,301,659
126	4,301,660
130	4,301,661
238.4	4,301,662
453	4,301,663
CLASS 63	
1 R	4,301,664
CLASS 65	
3.12	4,302,230
	4,302,232
3.15	4,302,231
14	4,302,234
30.11	4,302,235
CLASS 68	
5 E	4,301,665
23.7	4,301,666
CLASS 70	
380	4,301,667
422	4,301,668
428	4,301,669
CLASS 71	
9	4,302,236
11	4,302,237
88	4,302,238
	4,302,239
92	4,302,241
94	4,302,242
090	4,302,240
CLASS 72	
226	4,301,670
344	4,301,671
370	4,301,672
448	4,301,673
CLASS 73	
1 G	4,301,674
56	4,301,675
64.2	4,301,676
105	4,301,677
116	4,301,678
155	4,301,679
190 EW	4,301,680
304 C	4,301,681
355 R	4,301,682
517 R	4,301,683
602	4,301,684
723	4,301,685
861.35	4,301,686
862.45	4,301,687
CLASS 74	
37	4,301,688
336 R	4,301,689
363	4,301,690
422	4,301,691
476	4,301,692
505	4,301,693
518	4,301,694
602	4,301,695
821	4,301,696
869	4,301,697
CLASS 75	
1 T	4,302,243
60	4,302,244
86	4,302,245
101 R	4,302,246
122	4,302,247
128 A	4,302,248
143	4,302,249
CLASS 81	
468	4,301,698
CLASS 82	
34 R	4,301,699
CLASS 83	
91	4,301,700
349	4,301,701
862	4,301,702
CLASS 84	
1.01	4,301,703
1.22	4,301,704
318	4,301,705
CLASS 89	
1 B	4,301,707
1.810	4,301,708
11	4,301,709
12	4,301,710
33 BB	4,301,711
153	4,301,712
CLASS 91	
46	4,301,713
394	4,301,714
457	4,301,715
CLASS 92	
71	4,301,716
CLASS 99	
348	4,301,717
359	4,301,718
510	4,301,719
CLASS 100	
12	4,301,720
170	4,301,721
218	4,301,722
271	4,301,723
CLASS 101	
35	4,301,724
93.14	4,301,725
129	4,301,726
170	4,301,727
220	4,301,728
291	4,301,729
348	4,301,730
CLASS 102	
330	4,301,731
413	4,301,734
427	4,301,735
430	4,301,732
503	4,301,736
513	4,301,733
518	4,301,737
CLASS 104	
2	4,301,738
247	4,301,739
CLASS 105	
1 A	4,301,740
282 P	4,301,741
406 R	4,301,742
CLASS 106	
92	4,302,251
163 R	4,302,252
208	4,302,253
272	4,302,254
275	4,302,255
CLASS 108	
53.1	4,301,743
77	4,301,744
144	4,301,745
CLASS 110	
165 R	4,301,746
171	4,301,747
245	4,301,748
261	4,301,749
346	4,301,750
CLASS 112	
79 R	4,301,751
	4,301,752
121.11	4,301,753
158 E	4,301,754
	4,301,755
221	4,301,756
254	4,301,757
CLASS 114	
61	4,301,758
144 B	4,301,760
144 E	4,301,759
331	4,301,761
CLASS 118	
16	4,301,762
308	4,301,763
634	4,301,764
718	4,301,765
CLASS 119	
1	4,301,766
5	4,301,767
51 R	4,301,768
82	4,301,769
97 R	4,301,770
CLASS 122	
4 D	4,301,771
17	4,301,772
31 A	4,301,773
CLASS 123	
23	4,301,774
52 M	4,301,775
197 AC	4,301,776
379	4,301,777
426	4,301,778
478	4,301,779
486	4,301,780
541	4,301,781
620	4,301,782
CLASS 126	
63	4,301,783
131	4,301,784
292	4,301,785
417	4,301,786
429	4,301,787
435	4,301,788
439	4,301,789
CLASS 128	
6	4,301,790
89 R	4,301,791
202.26	4,301,792
204.21	4,301,793
207.21	4,301,794
207.25	4,301,795
213 R	4,301,796
214 R	4,301,797
239	4,301,798
272	4,301,799
	4,301,800
303.14	4,301,801
	4,301,802
349 B	4,301,803
419 P	4,301,805
419 PG	4,301,804
635	4,301,807
642	4,301,806
687	4,301,808
695	4,301,809
720	4,301,810
748	4,301,811
761	4,301,812
762	4,301,813
769	4,301,814
785	4,301,815
CLASS 131	
88	4,301,816
237	4,301,818
297	4,301,817
302	4,301,819
CLASS 132	
7	4,301,820
75.6	4,301,821
CLASS 134	
176	4,301,822
CLASS 137	
68 R	4,301,823
110	4,301,824
111	4,301,825
149	4,301,826
207	4,301,827
381	4,301,828
387	4,301,829
454.6	4,301,830
489.5	4,301,831
512	4,301,832
521	4,301,833
556	4,301,834
596	4,301,835
625.4	4,301,836
625.68	4,301,837
CLASS 138	
112	4,301,838
CLASS 139	
29	4,301,839
CLASS 141	
98	4,301,840
	4,301,841
114	4,301,842
172	4,301,843
CLASS 144	
3 R	4,301,844
34 E	4,301,845
162 R	4,301,846
194	4,301,847
CLASS 148	
4	4,302,256
111	4,302,257
CLASS 149	
19.1	4,302,258
61	4,302,259
CLASS 150	
1	4,301,848
33	4,301,849
CLASS 152	
361 R	4,301,850
CLASS 156	
63	4,302,260
64	4,302,261
71	4,302,262
100	4,302,263
110 A	4,302,264
117	4,302,265
149	4,302,266
158	4,302,267
238	4,302,268
243	4,302,269
290	4,302,270
293	4,302,271
309.9	4,302,272
345	4,302,273
401	4,302,274
446	4,302,275
553	4,302,276
567	4,302,277
610	4,302,278
616 R	4,302,279
617 SP	4,302,280
CLASS 160	
46	4,301,851
345	4,301,852
374.1	4,301,853
CLASS 162	
30 K	4,302,281
111	4,302,282

158	4,301,283
CLASS 164	
254	4,301,855
340	4,301,856
416	4,301,857
479	4,301,854
CLASS 165	
9	4,301,858
49	4,301,859
90	4,301,860
110	4,301,861
165	4,301,862
166	4,301,863
167	4,301,864
CLASS 166	
248	4,301,865
260	4,301,866
292	4,301,867
308	4,301,868
CLASS 171	
63	4,301,869
CLASS 172	
7	4,301,870
49.5	4,301,871
290	4,301,872
311	4,301,873
CLASS 173	
152	4,301,874
CLASS 174	
67	4,302,624
68.5	4,302,625
CLASS 175	
12	4,301,875
53	4,301,876
340	4,301,877
CLASS 177	
5	4,301,878
	4,301,879
189	4,301,880
CLASS 179	
1 GS5	4,302,626
1 ST	4,302,627
1.5 S	4,302,628
2 DP	4,302,629
6.07	4,302,630
15.55 R	4,302,631
27 FH	4,302,632
111 E	4,302,633
111 R	4,302,634
156 R	4,302,635
170 NC	4,302,636
CLASS 180	
6.48	4,301,881
153	4,301,882
179	4,301,883
190	4,301,884
205	4,301,885
261	4,301,886
CLASS 181	
107	4,301,887
114	4,301,888
145	4,301,889
286	4,301,890
CLASS 182	
135	4,301,891
233	4,301,892
CLASS 184	
24	4,301,893
CLASS 188	
24.19	4,301,894
59	4,301,895
70 R	4,301,896
196 BA	4,301,897
CLASS 190	
52	4,301,898
CLASS 191	
3	4,301,899
CLASS 192	
3.3	4,301,900
4 C	4,301,901
11	4,301,902
64	4,301,903
70.12	4,301,904
71	4,301,905
84 C	4,301,906
106.2	4,301,907
109 F	4,301,908
CLASS 194	
2	4,301,909
CLASS 198	
304	4,301,910
412	4,301,911
436	4,301,912
735	4,301,913
781	4,301,914
851	4,301,915
CLASS 200	
6 R	4,302,637
19 R	4,302,638
38 R	4,302,639
81 R	4,302,640
84 R	4,302,641
144 B	4,302,642
144 R	4,302,643
147 R	4,302,644
148 A	4,302,645
153 SC	4,302,646
159 B	4,302,647
	4,302,648
284	4,302,649
308	4,302,650
CLASS 202	
185 R	4,302,297
CLASS 203	
75	4,302,298
CLASS 204	
1 T	4,302,299
16	4,302,300
38 A	4,302,301
67	4,302,302
128	4,302,303
130	4,302,304
157.1 H	4,302,305
158 HA	4,302,306
169	4,302,307
180 P	4,302,308
181 N	4,302,309
186	4,302,310
192 R	4,302,311
195 R	4,302,313
	4,302,314
	4,302,315
195 S	4,302,312
224 R	4,302,316
228	4,302,317
229	4,302,318
238	4,302,319
278	4,302,320
291	4,302,321
293	4,302,322
CLASS 206	
38	4,301,916
39.5	4,301,917
150	4,301,918
223	4,301,919
315 R	4,301,920
330	4,301,921
428	4,301,922
484	4,301,923
520	4,301,924
616	4,301,925
620	4,301,926
622	4,301,927
CLASS 208	
89	4,302,323
131	4,302,324
180	4,302,325
188	4,302,326
CLASS 209	
240	4,302,327
587	4,301,928
608	4,301,929
671	4,301,930
691	4,301,931
CLASS 210	
97	4,302,329
107	4,302,330
160	4,302,331
369	4,302,332
456	4,302,333
500.2	4,302,334
651	4,302,335
654	4,302,336
662	4,302,337
714	4,302,328
752	4,302,338
776	4,302,339
CLASS 213	
76	4,301,932
CLASS 215	
1 C	4,301,933
11 D	4,301,934
100 A	4,301,935
247	4,301,936
252	4,301,937
CLASS 219	
10.55 B	4,302,651
72	4,302,652
110	4,302,653
121 LL	4,302,654
130.52	4,302,655
137 PS	4,302,656
137 R	4,302,657
	4,302,658
270	4,302,659
391	4,302,660
398	4,302,661
491	4,302,662
497	4,302,663
504	4,302,664
CLASS 220	
89 A	4,301,938
267	4,301,939
269	4,301,940
306	4,301,941
444	4,301,942
CLASS 222	
1	4,301,943
55	4,301,944
100	4,301,945
113	4,301,946
182	4,301,947
341	4,301,948
548	4,301,949
	4,301,950
CLASS 224	
32 A	4,301,952
32 R	4,301,951
42.03 B	4,301,953
42.23	4,301,954
273	4,301,955
311	4,301,956
CLASS 226	
118	4,301,957
CLASS 228	
4.5	4,301,958
102	4,301,959
CLASS 229	
30	4,301,960
55	4,301,961
72	4,301,962
CLASS 233	
26	4,301,963
	4,301,964
CLASS 235	
92 TF	4,302,665
404	4,302,666
CLASS 237	
2 B	4,301,965
CLASS 239	
75	4,301,966
99	4,301,967
102	4,301,968
132.3	4,301,969
338	4,301,970
351	4,301,971
445	4,301,972
CLASS 241	
20	4,301,973
244	4,301,974
CLASS 242	
25 R	4,301,975
55.19 A	4,301,976
107	4,301,977
150 R	4,301,978
217	4,301,979
CLASS 244	
12.2	4,301,981
12.5	4,301,980
17.11	4,301,982
122 R	4,301,983
137 R	4,301,984
CLASS 248	
188	4,301,985
221.3	4,301,986
221.4	4,301,987
430	4,301,988
548	4,301,989
CLASS 249	
44	4,301,990
174	4,301,991
CLASS 250	
205	4,302,667
209	4,302,668
264	4,302,669
324	4,302,670
327.1	4,302,671
	4,302,672
332	4,302,673
338	4,302,674
363 S	4,302,675
423 P	4,302,676
429	4,302,677
461 R	4,302,678
489	4,302,679
506	4,302,680
556	4,302,681
CLASS 251	
46	4,301,992
167	4,301,993
CLASS 252	
8.55 R	4,302,341
8.57	4,302,366
33.2	4,302,342
33.4	4,302,343
62	4,302,344
	4,302,345
75	4,302,346
116	4,302,347
135	4,302,348
174.21	4,302,349
174.23	4,302,350
182	4,302,351
299.63	4,302,352
373	4,302,353
392	4,302,354
408	4,302,355
426	4,302,356
437	4,302,357
441	4,302,358
466 PT	4,302,359
471	4,302,360
503	4,302,361
520	4,302,362
522 R	4,302,363
545	4,302,364
548	4,302,365
609	4,302,340
CLASS 254	
134.3 PA	4,301,994
411	4,301,995
CLASS 256	
1	4,301,996
CLASS 260	
17 R	4,302,367
17.4 GC	4,302,369
17.4 R	4,302,368
28.5 AS	4,302,370
28.5 R	4,302,371
29.3	4,302,372
	4,302,373
29.6 F	4,302,374
29.6 RB	4,302,375
29.7 PT	4,302,377
29.7 UA	4,302,376
31.6	4,302,378
38	4,302,379
	4,302,380
42.15	4,302,381
45.8 A	4,302,382
45.8 N	4,302,383
112 B	4,302,384
	4,302,385
112.5 R	4,302,386
155	4,302,387
157	4,302,388
	4,302,389
158	4,302,390
239 A	4,302,391
326.22	4,302,392
335	4,302,393
343.6	4,302,394
	4,302,395
346.3	4,302,396
347.8	4,302,397
365	4,302,398
377	4,302,399
429 R	4,302,400
448 C	4,302,401
465 E	4,302,402
505 E	4,302,403
CLASS 261	
44 C	4,302,404
	4,302,405
124	4,302,406
130	4,302,407
CLASS 264	
22	4,302,408
45.9	4,302,409
	4,302,410
107	4,302,411
109	4,302,412
126	4,302,413
137	4,302,414
138	4,302,415
244	4,302,416
322	4,302,417
341	4,302,418
CLASS 266	
236	4,301,997
281	4,301,998
CLASS 269	
21	4,301,999
CLASS 271	
150	4,302,000
183	4,302,001
272	4,302,002
CLASS 272	
1 B	4,302,003
29	4,302,004
94	4,302,005
115	4,302,006
116	4,302,007
117	4,302,008
123	4,302,009
CLASS 273	
54 C	4,302,010
85 G	4,302,011
148 R	4,302,012
157 R	4,302,013
183 B	4,302,014
271	4,302,015
278	4,302,016
323	4,302,017
CLASS 277	
27	4,302,018
56	4,302,019
205	4,302,020
CLASS 279	
60	4,302,021
CLASS 280	
43.19	4,302,022
43.24	4,302,023
47.33	4,302,024
79.1 A	4,302,025
491 F	4,302,026
618	4,302,027
631	4,302,028
646	4,302,029
802	4,302,030
804	4,302,031
CLASS 281	
29	4,302,032
CLASS 282	
27.5	Re.30,803
CLASS 285	
14	4,302,033
26	4,302,034
158	4,302,035
323	4,302,036
CLASS 290	
1 R	4,302,682
4 R	4,302,683
55	4,302,684
CLASS 292	
128	4,302,037
263	4,302,038
341.16	4,302,039
CLASS 294	
19 R	4,302,040
67 AB	4,302,041
	4,302,042
CLASS 296	
98	4,302,043
183	4,302,044
224	4,302,045
CLASS 297	
191	4,302,046
362	4,302,047
440	4,302,048
484	4,302,049
CLASS 298	
22 J	4,302,050
CLASS 299	
2	4,302,051
31	4,302,054
67	4,302,052
86	4,302,053
93	4,302,055
CLASS 303	
6 C	4,302,056
7	4,302,057
22 A	4,302,058
CLASS 307	
221 D	4,302,685
	4,302,686
252 G	4,302,687
252 J	4,302,688
353	4,302,689
451	4,302,690
592	4,302,691
CLASS 308	
6 C	4,302,059
9	4,302,060
10	4,302,061
22	4,302,062
CLASS 310	
113	4,302,692
156	4,302,693
321	4,302,694
324	4,302,695
CLASS 313	
93	4,302,696
113	4,302,697
222	4,302,698
229	4,302,699
292	4,302,700
293	4,302,701
348	4,302,702
CLASS 315	
13 ST	4,302,703
17	4,302,704
39	4,302,705
169.1	4,302,706
241 P	4,302,707
389	4,302,708
CLASS 316	
25	4,302,063
CLASS 318	
116	4,302,709
117	4,302,710
327	4,302,711
490	4,302,712
801	4,302,713
CLASS 320	
5	4,302,714
CLASS 323	
210	4,302,715
217	4,302,716
282	4,302,717
313	4,302,718
316	4,302,719
CLASS 324	
97	Re.30,806
146	4,302,720
226	4,302,721
339	4,302,722
343	4,302,723
402	4,302,724
404	4,302,725
CLASS 330	
260	4,302,726
266	4,302,727
CLASS 331	
25	4,302,728
94.5 C	4,302,730
94.5 H	4,302,729
116 R	4,302,731
176	4,302,732
CLASS 333	
101	4,302,733
104	4,302,734
138	4,302,735
172	4,302,736
	4,302,737
174	4,302,738
204	4,302,739
CLASS 335	
21	4,302,740
131	4,302,741
202	4,302,742
251	4,302,743
CLASS 338	
314	4,302,744
CLASS 339	
16 C	4,302,064
17 F	4,302,065
82	4,302,066
275 R	4,302,067
CLASS 340	
27 AT	4,302,745
38 L	4,302,746
64	4,302,747
67	4,302,748
309.1	4,302,752
628	4,302,753
631	4,302,754
734	4,302,755
763	4,302,751

802	4,302,756
854	4,302,757
870.02	4,302,750
CLASS 343	
9 R	4,302,758
121	4,302,759
715	4,302,760
CLASS 346	
75	4,302,761
	4,302,762
CLASS 350	
1.1	4,302,068
96.15	4,302,069
96.19	4,302,070
96.20	4,302,071
96.21	4,302,072
96.23	4,302,073
96.34	4,302,074
171	4,302,075
252	4,302,076
257	4,302,077
318	4,302,078
371	4,302,079
410	Re.30,804
CLASS 351	
139	4,302,080
161	4,302,081
CLASS 353	
27 R	4,302,082
CLASS 354	
23 D	4,302,083
25	4,302,084
32	4,302,085
55	4,302,086
79	4,302,087
107	4,302,088
152	4,302,089
234	4,302,090
246	4,302,091
307	4,302,092
CLASS 355	
3 DD	4,302,094
3 TR	4,302,093
8	4,302,095
43	4,302,096
52	4,302,097
55	4,302,098
68	4,302,099
	4,302,100
72	4,302,102
74	4,302,101
84	4,302,103
CLASS 356	
152	4,302,104
237	4,302,105
240	4,302,106
350	4,302,107
359	4,302,108
375	4,302,109
CLASS 357	
16	4,302,763
25	4,302,764
	4,302,765
41	4,302,766
79	4,302,767
CLASS 358	
36	4,302,768
55	4,302,769
75	4,302,770
86	4,302,771
100	4,302,772
106	4,302,773
113	4,302,774
136	4,302,775
160	4,302,776
	4,302,777
195.1	4,302,778
213	4,302,779
228	4,302,780
288	4,302,781
296	4,302,782
CLASS 360	
47	4,302,783
71	4,302,784
72.1	4,302,785
74.2	4,302,786
85	4,302,787
96.6	4,302,788
105	4,302,789
119	4,302,790
CLASS 361	
86	4,302,791
92	4,302,792
385	4,302,793
CLASS 362	
15	4,302,794
16	4,302,795
62	4,302,796
119	4,302,797
147	4,302,798
226	4,302,799
250	4,302,800
345	4,302,801
CLASS 363	
20	4,302,803
21	4,302,802
60	4,302,804
91	4,302,805
126	4,302,806
134	4,302,807
CLASS 364	
200	4,302,808
	4,302,809
	4,302,810
426	4,302,811
483	4,302,812
508	4,302,813
551	4,302,814
	4,302,815
709	4,302,816
724	4,302,817
736	4,302,818
737	4,302,819
900	4,302,820
	4,302,821
CLASS 365	
8	4,302,822
190	4,302,823
CLASS 366	
41	4,302,110
107	4,302,111
114	4,302,112
150	4,302,113
CLASS 367	
19	4,302,824
41	4,302,825
82	4,302,826
116	4,302,827
198	4,302,749
CLASS 368	
69	4,302,828
82	4,302,829
CLASS 369	
45	4,302,830
77	4,302,832
217	4,302,833
230	4,302,834
CLASS 370	
4	4,302,835
13	4,302,836
69	4,302,837
100	4,302,838
102	4,302,839
CLASS 371	
70	4,302,841
CLASS 375	
3	4,302,842
10	4,302,843
58	4,302,844
82	4,302,845
111	4,302,831
CLASS 376	
133	4,302,284
159	4,302,285
210	4,302,288
217	4,302,287
249	4,302,286
267	4,302,289
287	4,302,290
290	4,302,296
293	4,302,291
325	4,302,292
381	4,302,293
446	4,302,294
450	4,302,295
CLASS 400	
124	4,302,114
	4,302,115
	4,302,116
166	4,302,117
208	4,302,118
621	4,302,119
CLASS 401	
198	4,302,120
209	4,302,121
268	4,302,122
CLASS 402	
80 R	4,302,123
CLASS 403	
391	4,302,124
CLASS 404	
9	4,302,125
26	4,302,126
102	4,302,127
111	4,302,128
117	4,302,129
CLASS 405	
210	4,302,130
260	4,302,131
269	4,302,132
290	4,302,133
CLASS 406	
51	4,302,134
CLASS 408	
59	4,302,135
CLASS 411	
57	4,301,706
158	4,302,136
452	4,302,137
CLASS 414	
5	4,302,138
24.5	4,302,139
46	4,302,140
119	4,302,141
120	4,302,142
173	4,302,143
590	4,302,144
608	4,302,145
744 R	4,302,146
CLASS 415	
92	4,302,147
115	4,302,148
134	4,302,149
207	4,302,150
209	4,302,151
CLASS 416	
18	4,302,152
96 R	4,302,153
114	4,302,154
144	4,302,155
169 A	4,302,156
CLASS 417	
12	4,302,157
20	4,302,158
46	4,302,159
313	4,302,160
333	4,302,161
424	4,302,162
473	4,302,163
474	4,302,164
CLASS 418	
197	4,302,165
CLASS 422	
62	4,302,419
63	4,302,420
64	4,302,421
88	4,302,422
111	4,302,423
159	4,302,424
161	4,302,425
173	4,302,426
CLASS 423	
10	4,302,427
16	4,302,428
17	4,302,429
234	4,302,430
239	4,302,431
487	4,302,432
498	4,302,433
573 G	4,302,434
591	4,302,435
644	4,302,436
CLASS 424	
1	4,302,437
	4,302,438
7	4,302,439
35	4,302,440
48	4,302,441
61	4,302,442
68	4,302,443
89	4,302,444
101	4,302,445
131	4,302,446
145	4,302,447
177	4,302,448
180	4,302,449
181	4,302,450
211	4,302,451
243	4,302,452
244	4,302,453
246	4,302,454
250	4,302,455
251	4,302,456
	4,302,457
258	4,302,458
	4,302,459
	4,302,460
263	4,302,461
	4,302,462
	4,302,463
	4,302,464
267	4,302,465
	4,302,466
270	4,302,467
273 B	4,302,468
273 R	4,302,469
283	4,302,470
311	4,302,471
324	4,302,472
CLASS 425	
6	4,302,166
28 B	4,302,167
77	4,302,168
119	4,302,169
153.1	4,302,170
140	4,302,171
154	4,302,172
192 R	4,302,173
341	4,302,174
385	4,302,175
392	4,302,176
CLASS 426	
46	4,302,473
52	4,302,474
55	4,302,475
231	4,302,476
250	4,302,477
517	4,302,478
600	4,302,479
CLASS 427	
2	4,302,480
27	4,302,481
34	4,302,482
37	4,302,483
44	4,302,484
57	4,302,485
128	4,302,486
157	4,302,487
212	4,302,488
244	4,302,489
301	4,302,490
CLASS 428	
15	4,302,491
35	Re.30,805
40	4,302,492
91	4,302,493
95	4,302,494
110	4,302,495
196	4,302,496
203	4,302,497
209	4,302,498
236	4,302,499
284	4,302,500
304	4,302,501
311	4,302,502
323	4,302,503
332	4,302,504
341	4,302,505
	4,302,506
367	4,302,508
373	4,302,507
398	4,302,509
403	4,302,510
412	4,302,511
447	4,302,512
492	4,302,513
569	4,302,514
680	4,302,515
CLASS 429	
9	4,302,516
66	4,302,517
104	4,302,518
193	4,302,519
194	4,302,520
CLASS 430	
59	4,302,521
135	4,302,522
140	4,302,523
155	4,302,524
217	4,302,525
227	4,302,526
270	4,302,527
275	4,302,528
296	4,302,529
311	4,302,530
317	4,302,531
CLASS 431	
11	4,302,177
19	4,302,178
189	4,302,179
218	4,302,180
264	4,302,181
362	4,302,182
CLASS 432	
225	4,302,183
CLASS 433	
1	4,302,184
8	4,302,552
27	4,302,185
80	4,302,186
172	4,302,187
173	4,302,188
189	4,302,189
CLASS 434	
18	4,302,190
20	4,302,191
95	4,302,192
178	4,302,193
CLASS 435	
4	4,302,533
6	4,302,534
	4,302,535
7	4,302,536
	4,302,537
13	4,302,538
68	4,302,539
119	4,302,540
	4,302,541
161	4,302,543
247	4,302,542
253	4,302,544
289	4,302,545
315	4,302,546
CLASS 440	
13	4,302,194
61	4,302,195
75	4,302,196
CLASS 455	
19	4,302,846
CLASS 474	
267	4,302,197
CLASS 493	
14	4,302,198
CLASS 501	
3.43	4,302,233
70	4,302,250
CLASS 518	
701	4,302,547
CLASS 521	
28	4,302,548
57	4,302,549
133	4,302,550
163	4,302,551
176	4,302,552
CLASS 523	
28	4,302,553
71	4,302,554
96	4,302,555
199	4,302,556
211	4,302,557
218	4,302,558
271	4,302,559
327	4,302,560
	4,302,561
	4,302,562
330	4,302,563
398	4,302,564
CLASS 526	
88	4,302,565
125	4,302,566
159	4,302,567
187	4,302,568
231	4,302,569
320	4,302,570
CLASS 528	
32	4,302,571
73	4,302,572
89	4,302,573
	4,302,574
185	4,302,575
500	4,302,576
CLASS 536	
118	4,302,577
CLASS 542	
427	4,302,578
461	4,302,579
CLASS 544	
21	4,302,580
27	4,302,581
37	4,302,582
176	4,302,583
	4,302,584
247	4,302,585
254	4,302,586
320	4,302,587
CLASS 546	
158	4,302,588
201	4,302,589
216	4,302,590
257	4,302,591
CLASS 548	
144	4,302,592
CLASS 549	
29	4,302,593
CLASS 556	
425	4,302,594
CLASS 562	
485	4,302,595
503	4,302,596
CLASS 564	
127	4,302,597
132	4,302,598
146	4,302,599
206	4,302,600
351	4,302,601
428	4,302,602
485	4,302,603
491	4,302,604
CLASS 568	
60	4,302,605
333	4,302,606
352	4,302,607
384	4,302,608
471	4,302,609
475	4,302,610
484	4,302,611
604	4,302,612
618	4,302,613
641	4,302,614
652	4,302,615
722	4,302,616
CLASS 570	
230	4,302,617
CLASS 585	
1	4,302,618
408	4,302,619
467	4,302,620
	4,302,621
	4,302,622

CLASSIFICATION OF DESIGNS

D2—	317	261,945		167	261,966		413	261,987	D12—	146	262,011		138	262,032		90.1	262,053
	322	261,946		172	261,967		415	261,988		147	262,012			262,033		150	262,054
	415	261,947		192	261,968		433	261,989			262,013		140	262,034	D24—	27	262,055
D3—	30.1	261,948		205	261,969			261,990		156	262,014	D17—	10	262,035		58	262,056
	37	261,949		235	261,970		436	261,991		204	262,015	D18—	1	262,036		99	262,057
	39	261,950	D7—	94	261,971		449	261,992		300	262,009		24	262,037	D25—	30	262,058
D6—	22	261,951		100	261,972	D10—	23	261,993		317	262,016		25	262,038		74	262,059
	37	261,952		102	261,973		30	261,994	D14—	5	262,017			262,039	D28—	13	262,060
	47	261,953		106	261,974		62	261,995		15	262,018	D19—	33	262,040			262,061
		261,954		107	261,975		69	261,996		36	262,019		75	262,041			262,062
		261,955		132	261,976		106	261,997		53	262,020	D21—	12	262,042		40	262,063
	48.1	261,956		212	261,977			261,998			262,021		13	262,043		55	262,064
	73	261,957	D8—	82	261,978	D11—	61	261,999			262,022			262,044		61	262,065
		261,958			261,979		141	262,000			262,023		108	262,045		64	262,066
	86	261,959			261,980		158	262,001			262,024		110	262,046		74	262,067
	114	261,960			261,981			262,002			262,025		115	262,047	D29—	1	262,068
	130	261,961		98	261,982			262,003		59	262,026		143	262,048	D30—	16	262,069
	134	261,962		314	261,983			262,004		66	262,027		214	262,049	D32—	23	262,029
	157	261,963		367	261,984			262,005	D15—	29	262,028	D23—	48	262,050	D34—	33	262,008
	158	261,964	D9—	390	261,985			262,006		111	262,030			262,051			262,010
	161	261,965		403	261,986		162	262,007		122	262,031			262,052			

CLASSIFICATION OF PLANTS

P.—	34	4,793		54	4,794		63	4,795

GEOGRAPHICAL INDEX OF RESIDENCE OF INVENTORS

(U.S. States, Territories and Armed Forces, the Commonwealth of Puerto Rico, and the Canal Zone)

Alabama	1	Kentucky	21	Oregon	41
Alaska	2	Louisiana	22	Pennsylvania	42
American Samoa	3	Maine	23	Puerto Rico	43
Arizona	4	Maryland	24	Rhode Island	44
Arkansas	5	Massachusetts	25	South Carolina	45
California	6	Michigan	26	South Dakota	46
Canal Zone	7	Minnesota	27	Tennessee	47
Colorado	8	Mississippi	28	Texas	48
Connecticut	9	Missouri	29	Utah	49
Delaware	10	Montana	30	Vermont	50
District of Columbia	11	Nebraska	31	Virginia	51
Florida	12	Nevada	32	Virgin Islands	52
Georgia	13	New Hampshire	33	Washington	53
Guam	14	New Jersey	34	West Virginia	54
Hawaii	15	New Mexico	35	Wisconsin	55
Idaho	16	New York	36	Wyoming	56
Illinois	17	North Carolina	37	U.S. Air Force	57
Indiana	18	North Dakota	38	U.S. Army	58
Iowa	19	Ohio	39	U.S. Navy	59
Kansas	20	Oklahoma	40		

(First number in listing denotes location according to above key. Refer to patent number in body of the Official Gazette to obtain details as to inventor name, location, etc.)

PATENTS

6 :	4,301,557.
	4,302,284
9 :	Re.30,802
01 :	4,301,742
	4,301,779
	4,302,005
	4,302,111
	4,302,664
	4,302,683
04 :	4,301,658
	4,301,699
	4,301,862
	4,302,311
	4,302,708
	4,302,756
05 :	4,302,135
	4,302,195
06 :	Re.30,806
	4,301,545
	4,301,550
	4,301,552
	4,301,575
	4,301,580
	4,301,588
	4,301,603
	4,301,604
	4,301,609
	4,301,618
	4,301,674
	4,301,682
	4,301,684
	4,301,700
	4,301,709
	4,301,715
	4,301,722
	4,301,740
	4,301,747
	4,301,750
	4,301,761
	4,301,768
	4,301,773
	4,301,781
	4,301,787
	4,301,794
	4,301,810
	4,301,820
	4,301,840
	4,301,888
	4,301,898
	4,301,911
	4,301,917
	4,301,929
	4,301,947
	4,301,950
	4,301,952
	4,301,956
	4,301,963
	4,301,964
	4,301,967
	4,301,977
	4,301,992
	4,301,993
	4,301,994
	4,302,003
	4,302,017
	4,302,023
	4,302,024
	4,302,049
	4,302,052
	4,302,120
	4,302,121
	4,302,141
	4,302,150
	4,302,194
	4,302,204
	4,302,208
	4,302,214
	4,302,215
	4,302,217
	4,302,219
	4,302,237
	4,302,267
	4,302,278
	4,302,288
	4,302,291
	4,302,328
	4,302,344
	4,302,346
	4,302,392
	4,302,399
	4,302,402
	4,302,410
	4,302,422
	4,302,469
	4,302,476
	4,302,486
	4,302,488
	4,302,490
	4,302,492
	4,302,569
	4,302,577
	4,302,592
	4,302,593
	4,302,640
	4,302,667
	4,302,693
	4,302,717
	4,302,721
	4,302,729
	4,302,730
	4,302,744
	4,302,748
	4,302,765
	4,302,774
	4,302,775
	4,302,778
	4,302,782
	4,302,790
	4,302,796
	4,302,819
	4,302,825
	4,302,832
08 :	4,301,561
	4,301,788
	4,301,793
	4,301,847
	4,301,866
	4,301,867
	4,301,981
	4,302,051
	4,302,186
09 :	4,301,553
	4,301,584
	4,301,620
	4,301,677
	4,301,678
	4,301,771
	4,301,791
	4,301,806
	4,301,807
	4,301,821
	4,301,823
	4,301,826
	4,301,863
	4,301,887
	4,302,008
	4,302,010
	4,302,062
	4,302,095
	4,302,246
	4,302,253
	4,302,270
	4,302,316
	4,302,413
	4,302,464
	4,302,483
	4,302,591
	4,302,631
	4,302,695
	4,302,722
	4,302,770
	4,302,814
	4,302,815
	4,302,821
10 :	4,301,571
	4,302,241
	4,302,362
	4,302,429
	4,302,435
	4,302,451
	4,302,461
	4,302,495
	4,302,598
	4,302,682
11 :	4,302,734
12 :	4,301,593
	4,301,719
	4,301,727
	4,301,805
	4,301,897
	4,301,920
	4,301,995
	4,302,040
	4,302,127
	4,302,190
	4,302,297
	4,302,425
	4,302,427
	4,302,443
	4,302,513
	4,302,536
13 :	4,301,622
	4,301,751
	4,301,912
	4,301,996
	4,301,997
	4,302,009
	4,302,260
	4,302,646
16 :	4,302,478
17 :	4,301,590
	4,301,601
	4,301,693
	4,301,694
	4,301,713
	4,301,731
	4,301,741
	4,301,798
	4,301,800
	4,301,811
	4,301,812
	4,301,834
	4,301,835
	4,301,843
	4,301,916
	4,301,918
	4,301,935
	4,301,942
	4,301,962
	4,301,989
	4,302,004
	4,302,013
	4,302,035
	4,302,044
	4,302,045
	4,302,081
	4,302,106
	4,302,176
	4,302,181
	4,302,216
	4,302,226
	4,302,245
	4,302,315
	4,302,358
	4,302,382
	4,302,415
	4,302,436
	4,302,499
	4,302,555
	4,302,570
	4,302,637
	4,302,639
	4,302,660
	4,302,678
	4,302,714
	4,302,753
	4,302,784
	4,302,785
	4,302,798
	4,302,817
	4,302,834
	4,302,845
18 :	4,301,570
	4,301,619
	4,301,667
	4,301,703
	4,301,744
	4,301,797
	4,301,824
	4,301,872
	4,301,881
	4,301,893
	4,301,901
	4,301,902
	4,301,932
	4,301,934
	4,301,976
	4,302,014
	4,302,067
	4,302,149
	4,302,175
	4,302,178
	4,302,391
	4,302,626
	4,302,663
	4,302,670
	4,302,710
19 :	4,301,638
	4,301,732
20 :	4,301,555
	4,301,647
	4,301,954
	4,302,025
21 :	4,301,666
	4,301,829
	4,301,833
	4,301,961
	4,302,118
	4,302,125
	4,302,487
	4,302,643
22 :	4,301,655
	4,302,022
	4,302,206
	4,302,255
	4,302,283
	4,302,325
	4,302,339
	4,302,359
24 :	Re.30,804
	4,301,592
	4,301,734
	4,301,736
	4,301,799
	4,302,011
	4,302,162
	4,302,193
	4,302,231
	4,302,259
	4,302,345
	4,302,418
	4,302,459
	4,302,712
	4,302,746
	4,302,791
25 :	4,301,612
	4,301,686

	4,301,690		4,301,971		4,302,565		4,302,642		4,301,676		4,302,185
	4,301,743		4,302,033		4,302,566		4,302,679		4,301,702		4,302,387
	4,301,857		4,302,050		4,302,578		4,302,686		4,301,884		4,302,390
	4,301,865		4,302,053		4,302,590		4,302,720		4,302,088		4,302,432
	4,301,879		4,302,101		4,302,599		4,302,747		4,302,500		4,302,452
	4,301,915		4,302,171		4,302,603		4,302,764		4,302,738		4,302,661
	4,301,949		4,302,192		4,302,606		4,302,810	42 :	4,301,563	48 :	4,301,628
	4,301,953		4,302,369		4,302,619	37 :	4,301,573		4,301,569		4,301,659
	4,301,973		4,302,529		4,302,620		4,301,583		4,301,596		4,301,827
	4,301,979		4,302,641		4,302,621		4,301,637		4,301,630		4,301,841
	4,302,006		4,302,789		4,302,622		4,301,770		4,301,641		4,301,861
	4,302,018	29 :	4,301,544		4,302,632		4,301,783		4,301,681		4,301,877
	4,302,108		4,301,645		4,302,697		4,302,145		4,301,687		4,301,909
	4,302,290		4,301,707		4,302,703		4,302,202		4,301,728		4,301,980
	4,302,301		4,301,868		4,302,706		4,302,280		4,301,766		4,301,999
	4,302,334		4,301,873		4,302,718		4,302,368		4,301,776		4,302,048
	4,302,419		4,301,891		4,302,754		4,302,587		4,301,808		4,302,069
	4,302,496		4,301,941		4,302,792		4,302,654		4,301,890		4,302,116
	4,302,509		4,302,041		4,302,802	38 :	4,301,646		4,301,899		4,302,139
	4,302,525		4,302,042		4,302,812		4,302,043		4,301,921		4,302,157
	4,302,535		4,302,104		4,302,838		4,302,799		4,301,928		4,302,159
	4,302,549		4,302,508	35 :	4,302,166	39 :	Re.30,803		4,301,983		4,302,177
	4,302,574		4,302,564	36 :	4,301,546		Re.30,805		4,301,991		4,302,184
	4,302,607		4,302,617		4,301,547		4,301,625		4,302,060		4,302,229
	4,302,610		4,302,649		4,301,548		4,301,629		4,302,063		4,302,310
	4,302,612		4,302,745		4,301,565		4,301,661		4,302,096		4,302,331
	4,302,634	30 :	4,302,038		4,301,567		4,301,671		4,302,134		4,302,343
	4,302,691		4,302,320		4,301,599		4,301,809		4,302,146		4,302,356
	4,302,699	31 :	4,301,632		4,301,608		4,301,831		4,302,154		4,302,370
	4,302,733	32 :	4,301,560		4,301,616		4,301,924		4,302,163		4,302,428
	4,302,735		4,302,158		4,301,642		4,301,926		4,302,182		4,302,563
	4,302,752		4,302,210		4,301,669		4,301,946		4,302,209		4,302,576
	4,302,794		4,302,741		4,301,712		4,301,987		4,302,240		4,302,651
	4,302,795	33 :	4,302,169		4,301,718		4,301,998		4,302,244		4,302,669
	4,302,806	34 :	Re.30,801		4,301,767		4,302,065		4,302,263		4,302,723
	4,302,826		4,301,598		4,301,774		4,302,066		4,302,272		4,302,739
	4,302,835		4,301,600		4,301,785		4,302,100		4,302,273		4,302,766
26 :	4,301,549		4,301,626		4,301,802		4,302,126		4,302,286		4,302,769
	4,301,613		4,301,639		4,301,849		4,302,128		4,302,296		4,302,793
	4,301,640		4,301,730		4,301,892		4,302,155		4,302,330		4,302,805
	4,301,649		4,301,737		4,301,919		4,302,156		4,302,340		4,302,818
	4,301,656		4,301,801		4,301,937		4,302,188		4,302,375		4,302,844
	4,301,664		4,301,851		4,301,945		4,302,199		4,302,403	49 :	4,301,564
	4,301,672		4,301,854		4,301,955		4,302,207		4,302,417		4,302,684
	4,301,689		4,301,936		4,301,957		4,302,234		4,302,455	50 :	4,301,710
	4,301,692		4,301,978		4,301,968		4,302,236		4,302,530		4,302,823
	4,301,695		4,302,016		4,301,982		4,302,239		4,302,539	51 :	4,301,636
	4,301,723		4,302,046		4,302,007		4,302,264		4,302,548		4,301,654
	4,301,763		4,302,068		4,302,012		4,302,274		4,302,560		4,301,708
	4,301,777		4,302,074		4,302,026		4,302,275		4,302,561		4,301,817
	4,301,822		4,302,079		4,302,078		4,302,282		4,302,562		4,301,830
	4,301,825		4,302,142		4,302,084		4,302,327		4,302,585		4,301,940
	4,301,832		4,302,170		4,302,094		4,302,348		4,302,605		4,302,152
	4,301,910		4,302,203		4,302,099		4,302,350		4,302,608		4,302,174
	4,301,960		4,302,213		4,302,102		4,302,383		4,302,630		4,302,223
	4,302,036		4,302,218		4,302,113		4,302,386		4,302,658		4,302,308
	4,302,057		4,302,222		4,302,224		4,302,397		4,302,715		4,302,531
	4,302,103		4,302,230		4,302,227		4,302,503		4,302,725		4,302,673
	4,302,140		4,302,252		4,302,228		4,302,517		4,302,732		4,302,713
	4,302,147		4,302,269		4,302,235		4,302,520		4,302,740		4,302,757
	4,302,183		4,302,305		4,302,238		4,302,568		4,302,750	53 :	4,301,784
	4,302,335		4,302,317		4,302,250		4,302,581		4,302,804		4,301,828
	4,302,337		4,302,318		4,302,313		4,302,623		4,302,807		4,301,984
	4,302,365		4,302,323		4,302,420		4,302,675		4,302,809		4,302,029
	4,302,412		4,302,324		4,302,437		4,302,801		4,302,811		4,302,271
	4,302,449		4,302,355		4,302,440		4,302,820		4,302,827		4,302,629
	4,302,456		4,302,373		4,302,446	40 :	4,301,938	44 :	4,301,852		4,302,666
	4,302,457		4,302,395		4,302,462		4,302,015	45 :	4,301,577		4,302,689
	4,302,546		4,302,400		4,302,494		4,302,032		4,301,602	54 :	4,301,587
	4,302,596		4,302,401		4,302,519		4,302,256		4,301,762		4,302,547
	4,302,624		4,302,409		4,302,527		4,302,341		4,301,813	55 :	4,301,772
	4,302,638		4,302,426		4,302,532		4,302,423		4,302,020		4,301,889
	4,302,653		4,302,442		4,302,544		4,302,470		4,302,266		4,301,972
27 :	4,301,627		4,302,450		4,302,553		4,302,542		4,302,505		4,302,172
	4,301,660		4,302,453		4,302,575		4,302,559		4,302,506		4,302,196
	4,301,662		4,302,498		4,302,589		4,302,604	47 :	4,301,586		4,302,615
	4,301,796		4,302,511		4,302,611		4,302,613		4,301,610		4,302,635
	4,301,804		4,302,515		4,302,616		4,302,618		4,301,614		4,302,647
	4,301,914		4,302,524		4,302,625	41 :	4,301,644		4,301,752		4,302,724
	4,301,925		4,302,538								

DESIGN PATENTS

04 :	261,960		262,025	15 :	262,035		261,981		261,970		262,013
06 :	261,945		262,026	17 :	261,949	25 :	261,976	36 :	261,953		262,027
	261,948		262,047		261,967		261,986		261,954	40 :	261,963
	261,952		262,049		261,983		262,054		261,955	42 :	261,947
	261,956		262,053		261,985	26 :	261,971		261,959		261,972
	261,961		262,055		261,990		261,973		261,987		261,998
	261,964		262,057		261,996		261,995		262,000		262,021
	261,968		262,058		261,997		262,012		262,017	47 :	261,946
	261,991		262,064		262,009		262,050		262,020	48 :	262,019
	261,999		262,067		262,018		262,051		262,029		262,066
	262,008		262,068		262,044	27 :	261,989		262,036	51 :	261,984
	262,016	08 :	262,037	18 :	262,059		262,031		262,069	53 :	261,977
	262,022	09 :	261,974	20 :	261,978		262,065	37 :	262,030	55 :	261,966
	262,023		262,063		261,979	34 :	261,962	39 :	261,992		261,988
	262,024	12 :	261,975		261,980		261,969				

PLANT PATENTS

09 :	4,794	25 :	4,795	39 :	4,793						

U.S. GOVERNMENT PRINTING OFFICE : O—1981

CHANGE OF ADDRESS FORM

NAME—FIRST, LAST

COMPANY NAME OR ADDITIONAL ADDRESS LINE

STREET ADDRESS

CITY

STATE

ZIP CODE

PLEASE PRINT OR TYPE

(or) COUNTRY

Mail this form to: NEW ADDRESS

Superintendent of Documents
Government Printing Office SSOM
Washington, D.C. 20402

Attach last subscription label here.

SUBSCRIPTION ORDER FORM

SUBSCRIPTION ORDER FORM

ENTER MY SUBSCRIPTION TO:

@ $ Domestic; @ $ Foreign.

NAME FIRST LAST

COMPANY NAME OR ADDITIONAL ADDRESS LINE

STREET ADDRESS

CITY

STATE

ZIP CODE

PLEASE PRINT OR TYPE

(or) COUNTRY

[ ] Remittance Enclosed (Make checks payable to Superintendent of Documents)

[ ] Charge to my Deposit Account No

MAIL ORDER FORM TO
Superintendent of Documents
Government Printing Office
Washington D C 20402

U S

OFFICIAL GAZETTE

UNITED STATES

PATENT OFFICE

VOL NO 1012

NOVEMBER

1981

END